MITSUBISHI HEAVY INDUSTRIES, LTD.
16-5, KONAN 2-CHOME, MINATO-KU
TOKYO, JAPAN

July 3, 2009

Document Control Desk
U.S. Nuclear Regulatory Commission
Washington, DC 20555-0001

Attention: Mr. Jeffery A. Ciocco

Docket No. 52-021
MHI Ref: UAP-HF- 09363

Subject: MHI's Responses to US-APWR DCD RAI No. 340-2004

Reference: 1) "Request for Additional Information No. 340-2004 Revision 0, SRP Section: 03.08.05 – Foundations, Application Section: 3.8.5," dated 4/21/2009.

With this letter, Mitsubishi Heavy Industries, Ltd. ("MHI") transmits to the U.S. Nuclear Regulatory Commission ("NRC") a document entitled "Responses to Request for Additional Information No. 340-2004, Revision 0."

Enclosed are the responses to 22 RAIs contained within Reference 1.

Please contact Dr. C. Keith Paulson, Senior Technical Manager, Mitsubishi Nuclear Energy Systems, Inc. if the NRC has questions concerning any aspect of this submittal. His contact information is provided below.

Sincerely,

Y. Ogata

Yoshiki Ogata,
General Manager- APWR Promoting Department
Mitsubishi Heavy Industries, LTD.

Enclosure:

1. Responses to Request for Additional Information No. 340-2004, Revision 0

CC: J. A. Ciocco
C. K. Paulson

D081
NRO

Contact Information

C. Keith Paulson, Senior Technical Manager
Mitsubishi Nuclear Energy Systems, Inc.
300 Oxford Drive, Suite 301
Monroeville, PA 15146
E-mail: ck_paulson@mnes-us.com
Telephone: (412) 373-6466

Enclosure 1

UAP-HF- 09363
Docket No. 52-021

Responses to Request for Additional Information No. 340-2004,
Revision 0

July, 2009

RESPONSE TO REQUEST FOR ADDITIONAL INFORMATION

7/03/2009

US-APWR Design Certification

Mitsubishi Heavy Industries

Docket No. 52-021

RAI NO.:	**NO. 340-2004 REVISION 0**
SRP SECTION:	**03.08.05 - FOUNDATIONS**
APPLICATION SECTION:	**03.08.05**
DATE OF RAI ISSUE:	**04/21/09**

QUESTION NO. RAI 03.08.05-01:

In DCD Subsection 3.8.5.1.1, the second sentence (Page 3.8-69) states that, "The basemat of the R/B is a rectangular reinforced concrete mat...." The rectangular shape agrees with the shape shown in DCD Figure 3.8.5-5 (Page 3.8-219), but it differs from the shape shown in DCD Figure 3.8.5-6 (Page 3.8-220). The applicant is requested to explain this discrepancy.

ANSWER:

The FE models shown in Figures 3.8.5-5 and 3.8.5-6 are correct. They are cross sections of the R/B basemat taken at slightly different elevations as shown on the drawings in MHI Document "General Arrangement of Power Block (for Standard Plant)", 4CS-UAP-20070026 Rev. 4. The basemat of the R/B is not perfectly rectangular over its entire depth and DCD Subsection 3.8.5.1.1 will be revised to clarify this issue.

Impact on DCD

See Attachment 1 for a mark-up of DCD Tier 2, Section 3.8, changes to be incorporated.

- Change the second sentence in the first paragraph of Subsection 3.8.5.1.1 to: "The basemat of the R/B is essentially a rectangular-shaped reinforced concrete mat and is composed of two parts."

Impact on COLA

There is no impact on the COLA.

Impact on PRA

There is no impact on the PRA.

RESPONSE TO REQUEST FOR ADDITIONAL INFORMATION

7/03/2009

US-APWR Design Certification

Mitsubishi Heavy Industries

Docket No. 52-021

RAI NO.:	**NO. 340-2004 REVISION 0**
SRP SECTION:	**03.08.05 - FOUNDATIONS**
APPLICATION SECTION:	**03.08.05**
DATE OF RAI ISSUE:	**04/21/09**

QUESTION NO. RAI 03.08.05-02:

In DCD Subsection 3.8.5.4.1, the first paragraph (Page 3.8-71) states that: "For purposes of the US-APWR standard design, the SSI effects are captured by considering three generic subgrade types utilizing frequency independent springs." It further states: "Subsection 3.7.2.4 provides further discussion relating to SSI and the selection of subgrade types."

ASCE 4-98 is referenced in DCD Subsection 3.7.2.4 for SSI analysis. Per ASCE 4-98 subsection 1.1.1, for SSI of a sub-grade type, three cases are analyzed using different soil modulus values (see subsection 3.3.1.7 of ASCE 4-98) and the envelope of the SSI analyses from these three cases is to be used for design. This means that for each of the three soil types, three cases are to be analyzed: (1) Best Estimate; (2) Upper Bound; and, (3) Lower Bound. So, for US-APWR, a total of 9 cases should be analyzed for SSI. The analyses presented in DCD Subsection 3.7.2 of US-APWR did not follow this recommendation. Provide the technical basis for not following the ASCE 4-98 recommendation.

ANSWER:

The standard plant design considers four generic subgrade conditions with shear wave velocities ranging from 1000 ft/s to 8000 ft/s as described in DCD Subsection 3.7.2.4. The range of shear wave velocities considered for the standard plant design corresponds to a large envelope of subgrade shear modulus values (approximately 3,400 ksf to 320,000 ksf). This meets the intent of ASCE 4-98 Section 3.3.1.7 and SRP 3.7.2 II.4.C with respect to capturing uncertainties in soil properties and the SSI analysis. Further, site-specific SSI analyses are required to consider the Best Estimate, Upper Bound, and Lower Bound small strain shear modulus values of the site-specific soil profile as discussed in DCD Subsection 3.7.2.4.1.

Impact on DCD

There is no impact on the DCD.

Impact on COLA

There is no impact on the COLA.

Impact on PRA

There is no impact on the PRA.

RESPONSE TO REQUEST FOR ADDITIONAL INFORMATION

7/03/2009

US-APWR Design Certification

Mitsubishi Heavy Industries

Docket No. 52-021

RAI NO.:	**NO. 340-2004 REVISION 0**
SRP SECTION:	**03.08.05 - FOUNDATIONS**
APPLICATION SECTION:	**03.08.05**
DATE OF RAI ISSUE:	**04/21/09**

QUESTION NO. RAI 03.08.05-03:

In DCD Subsection 3.8.5.4.1, the first paragraph (Page 3.8-71) states, "For purposes of the US-APWR standard design, the SSI effects are captured by considering three generic subgrade types utilizing frequency independent springs. A fourth subgrade condition is also considered, that of a foundation resting on hard rock. For the fourth condition, it is not necessary to consider SSI effects because the foundation is considered to be resting on a fixed base that is rigid." The second paragraph states "The four supporting media (subgrade) conditions for the US-APWR design are provided in Table 3.8.5-3." In Table 3.8.5-3, these four media are denoted as soft soil, stiff soil (Medium 1), soft rock (Medium 2), and hard rock (Fixed). The shear wave velocities for these four media are given in DCD Subsection 3.7.2.4 (Page 3.7-29). They are 1,000 ft/s, 3,500 ft/s, 6,500 ft/s, and 8,000 ft/s, respectively.

The applicant is requested to provide the following information:

(a) Traditionally, the shear wave velocity is not specified for the fixed-base condition. Explain why is the shear wave velocity of 8,000 ft/s specified? Is 8,000 ft/s the minimum shear wave velocity for the fixed-base condition?

(b) In subsection 1.2 of ASCE 4-98, "Rock" is defined as material with a shear wave velocity of 3,500 ft/s or more. In subsection 3.3.1 of ASCE 4-98, item (a) states that SSI need not be considered if the structure is supported by a rock. Therefore, in accordance with the ASCE 4-98, SSI effects need not be considered for three out of four subgrade conditions that the applicant had chosen. Then there are only two subgrade conditions considered in the USAPWR, soft soil and fixed-base conditions. Provide the rationale for selecting the range of soils with their corresponding shear wave velocities for SSI analyses.

ANSWER:

(a) The US-APWR considers the fixed base condition when the subgrade under the entire surface of the foundation has a shear wave velocity of 8,000 feet per second or higher. This is stated in the third paragraph under Subsection 3.7.2.2 of the DCD. This provision is in accordance with SRP 3.7.2.II.4 which states, "For structures founded on materials having a shear wave velocity of 8,000 feet per second or higher, under the entire surface

of the foundation, a fixed base assumption is acceptable." Therefore, 8,000 ft/s can be considered the minimum shear wave velocity at which a fixed-base condition can be used in the seismic analyses of a mathematical model.

(b) The US-APWR standard plant design and the DCD requirements for site-specific SSI design have established 8,000 ft/s as the minimum shear wave velocity at which a fixed-base condition can be considered as discussed in (a). This is also clarified further in the response to Question RAI 3.7.2-22 of RAI 212-1950. The response to Question RAI 3.7.2-1 of RAI 212-1950 discusses the use of ASCE 4-98 as a reference for the DCD. It is acknowledged that historically, the value of 3,500 ft/s was used as a lower limit for subgrade shear wave velocity, above which a fixed-based analysis for purposes of SSI analysis could be acceptable (refer to discussion in part II, item 4 of SRP 3.7.2, Rev. 2, on page 3.7.2-10).

SRP 3.7.2.I.4 states, "Competent material is defined as in-situ material having a minimum shear wave velocity of 1,000 feet/second (fps)." This is the lower bound value of the shear wave velocity that can be considered for most nuclear power plant sites.

The above two paragraphs establish two extreme values of shear wave velocities as 1,000 feet per second and 8,000 feet per second. Having these extreme values, two intermediate values at reasonable intervals, 3,500 ft/s and 6,500 ft/s, were selected to encompass the entire range. It is more accurate to consider SSI analyses for these two intermediate values of shear wave velocities than not to consider and treat the mathematical model with a fixed base condition.

For convenience, the four values of shear wave velocities at 1000 ft/s, 3,500 ft/s, 6,500 ft/s and 8,000 f/s are classified as soft soil, stiff soil (Medium 1), soft rock (Medium 2), and hard rock (Fixed).

Impact on DCD

There is no impact on the DCD.

Impact on COLA

There is no impact on the COLA.

Impact on PRA

There is no impact on the PRA.

RESPONSE TO REQUEST FOR ADDITIONAL INFORMATION

7/03/2009

US-APWR Design Certification

Mitsubishi Heavy Industries

Docket No. 52-021

RAI NO.:	**NO. 340-2004 REVISION 0**
SRP SECTION:	**03.08.05 - FOUNDATIONS**
APPLICATION SECTION:	**03.08.05**
DATE OF RAI ISSUE:	**04/21/09**

QUESTION NO. RAI 03.08.05-04:

In DCD Subsection 3.8.5.4.1, the third paragraph (Page 3.8-71) states, "For the generic subgrade having a shear wave velocity of 1,000 ft/s, the shear modulus is reduced in accordance with Subsection 3.7.2.4 to account for changes in shear modulus due to relatively large strains." DCD Subsection 3.7.2.4.1 (Page 3.7-31) indicates that the soil degradation curves should be used to account for changes in shear modulus due to relatively large strains; however, no information that pertains to the soil degradation curves is given in the DCD. In DCD Subsection 3.7.2.4.1 (Page 3.7-31), the lower bound and the upper bound values of the initial shear modulii are established from the best estimated soil shear modulus, and the value of C_v.

The applicant is requested to provide the following information:

(a) Provide the soil degradation curves used in your analyses to account for changes in shear modulus due to relative large strains. Also, provide the technical basis for your selection of these curves.

(b) Provide the value or values of C_v used in the calculation for the upper and lower bound of the soil shear modulii.

ANSWER:

The seismic design of US-APWR standard plant considers four generic subgrade conditions that represent dynamic properties of the subgrade material that are compatible to the strains generated in the soil by the input design ground motion. The uncertainties related to variation and measurement of the dynamic properties of the subgrade materials and the effects of non-linearity (strain dependence) of subgrade material are addressed on a site specific basis in accordance with *COL3.7(8)* and associated COL items *3.7(3)*, *3.7(20)*, *3.7(25)* and *3.7(26)*. The third paragraph of Section 3.8.5.4.1 of the DCD will be revised to state that the properties provided in Table 3.8.5-3 are considered to represent stiffness properties of the subgrade material that are compatible to the strains generated in the soil by the input design ground motion. It will be also stated that the SSI analyses of the four generic subgrade conditions conservatively neglect to consider the dissipation of energy in the subgrade media due to the soil material damping.

In order to consider in a simplified manner the SSI effects on the seismic response of US-APWR standard plant, the models used for seismic response analyses use frequency independent SSI parameters that are developed assuming a rigid foundation resting on the surface of elastic half space. Two elastic parameters, shear velocity V_s and Poisson's ratio ν, are used to represent the stiffness properties of the subgrade material that are assumed to be uniform both horizontally and vertically. The dissipation of energy in the subgrade media due to material damping and the effects of the ground water are neglected. The standard seismic design considers four generic subgrade conditions to represent in a simplified manner the variation of subgrade conditions at possible candidate sites. The four generic subgrade conditions are used that represent the stiffness properties of the subgrade material that are compatible to the strains generated in the soil by the input design ground motion.

The COL Applicant must demonstrate the validity of the standard design for particular site-specific conditions as described in Subsection 3.7.2.4.1 of the DCD, by performing site-specific SSI analyses that address, among other effects, the variation and non-linearity (strain dependence) of dynamic properties of subgrade materials. The site-specific SSI analyses use input ground motions that are compatible to the site-specific ground motion response spectra (GMRS) and foundation input response spectra (FIRS). The site-specific GMRS and FIRS are developed using site amplification functions that are obtained from a set of site response analyses that address the variations and non-linearity of the subgrade material properties. As described in Subsection 3.7.1.1 of the DCD, the site response analyses use equivalent linear methodology to address the non-linearity of the soil based on soil degradation curves that represent the stiffness and damping properties of the subgrade materials as function of strain. Site-specific SSI analyses use input soil properties that are compatible with the strains generated in the subgrade by the input site-specific ground motion. The strain-compatible soil properties are obtained from the equivalent linear site response analyses. To account for the uncertainties and variations of the subgrade properties, at least three sets of site profiles are used that represent the best estimate (BE), lower bound (LB), and upper bound (UB) stiffness and damping properties of the soil and/or rock layers. The LB and UB soil profiles are developed in accordance with SRP 3.7.2 II.4.C and Subsection 3.3.1.7 of ASCE 4-98, using an appropriate variation factor C_v, for which the value is established on site-specific basis.

The dynamic properties of site-specific subgrade materials (shear velocity V_s, Poisson ration ν, and critical damping ratio ζ) as well as their variation are obtained from a geotechnical investigation program. A dynamic soil testing program is instituted as specified in COL Item *3.7(8)* to establish degradation curves for the strain-dependent subgrade materials. Soil degradation curves for typical materials published in the technical literature can be used to represent the non-linear properties of embedment soil materials placed on the sides of Category I and II foundations. The value of the variation factor C_v is established for every soil/rock layer based on the findings of the geotechnical investigation and soil testing program and the evaluation of measurement uncertainties. For relatively uniform soil sites, if sufficient and adequate soil investigation data are available, the LB and UB values of the initial (small strain) subgrade properties are established to cover the mean (BE) plus or minus one standard deviation. For well-investigated sites, C_v should be no less than 0.5. For sites with higher variation of soil properties and for deep layers for which the available test data is insufficient (i.e. for sites that are not well investigated), C_v must be greater than 1.0.

Impact on DCD

See Attachment 1 for the mark-up of DCD Tier 2, Section 3.8, changes to be incorporated.

- Replace the third paragraph of Section 3.8.5.4.1 with the following:

"The properties of conditions provided in Table 3.8.5-3 are considered to represent stiffness properties of the subgrade material that are compatible to the strains generated in the soil by the input design ground motion. The dissipation of energy in the subgrade media due to the soil material damping is conservatively neglected."

Impact on COLA

There is no impact on the COLA.

Impact on PRA

There is no impact on the PRA.

RESPONSE TO REQUEST FOR ADDITIONAL INFORMATION

7/03/2009

US-APWR Design Certification

Mitsubishi Heavy Industries

Docket No. 52-021

RAI NO.:	**NO. 340-2004 REVISION 0**
SRP SECTION:	**03.08.05 - FOUNDATIONS**
APPLICATION SECTION:	**03.08.05**
DATE OF RAI ISSUE:	**04/21/09**

QUESTION NO. RAI 03.08.05-05:

In DCD Subsection 3.8.5.4.1, the second paragraph (Page 3.8-71) states, "The four supporting media (subgrade) conditions for the US-APWR design are provided in Table 3.8.5-3", and the fourth paragraph (Page 3.8-71) states, "An average subgrade bearing capacity of 15,000 psf is utilized for static load cases, while an average dynamic soil bearing capacity of 95,000 psf is used for Normal plus SSE loads."

The applicant is requested to provide the following information:

(a) There are four supporting media (soil) conditions shown in DCD Table 3.8.5-3. Are 15,000 psf and 95,000 psf the average bearing capacities (static and dynamic respectively) of these four types of soils? If not, define what "an average subgrade bearing capacity" is, and how these two numbers were derived or obtained.

(b) Explain the rationale for the increase by 6.3 times (95,000/15,000) for the dynamic soil bearing capacity.

(c) Provide the rationale for using an average subgrade bearing capacity for static load cases and an average dynamic bearing capacity for dynamic loads in the design of structures.

(d) Provide the maximum dynamic pressure on soils under the basemat during the SSE for the four supporting media considered.

ANSWER:

(a) The fourth paragraph of DCD Subsection 3.8.5.4.1 is to be corrected consistent with the revisions made to DCD Tier 1, Table 2.1-1, and DCD Tier 2, Table 2.0-1 in the response to Open Item RGS1 2.5.4:

(1) Replace the terms "average static bearing capacity" and "average dynamic bearing capacity" with "minimum allowable static bearing capacity" and "minimum allowable dynamic bearing capacity", respectively.

(2) Correct the value for the dynamic bearing capacity from 95 ksf to 60 ksf.

The minimum allowable bearing capacity is defined based on the maximum bearing pressure demands for evaluation of the capacity of the site subgrade to support the US-APWR Reactor Building (R/B) complex foundation. The DCD specifies an allowable static bearing capacity of 15 ksf based on the value of the average bearing pressure of 11.3 ksf calculated for the common foundation mat of R/B complex under combined dead load (*DL*) and live load (*LL*). A value of 15 ksf is specified for the static bearing capacity to provide an additional margin of safety in the site bearing capacity evaluations. The value of the minimum allowable dynamic bearing capacity is based on the calculation of maximum bearing pressure under the foundation basemat of the R/B complex due to the combined action of the static and seismic loads that envelopes the dynamic pressures calculated for all four generic subgrade conditions. As described below in the response to Item (b), the results of the seismic response analyses of all four generic soil cases, presented in Subsection 3.7.2 of the DCD, are used to determine the critical load combinations that result in maximum dynamic bearing pressures. The seismic loads obtained from the seismic response analysis of Medium 1 generic subgrade provided the two critical load cases LC3 and LC4 listed in the table below, for the finite element (FE) uplift analyses. The maximum dynamic bearing pressure of 53.0 ksf is obtained from the results of FE uplift analyses that use compression-only springs to model the stiffness of the Medium 1 generic subgrade. A value of 60 ksf is specified for the minimum allowable dynamic bearing capacity to provide an additional margin of safety in the site bearing capacity evaluations. The minimum allowable bearing pressures specified for the R/B complex foundation envelope the foundation bearing pressures for all other standard plant building structures.

(b) A value of 60 ksf is specified for the minimum allowable dynamic bearing capacity that is 4 times the value of 15 ksf specified for the minimum allowable static bearing capacity in order to account for the eccentricity of the load and the uplift of the foundation as explained in the response to Item (a) above.

(c) The terminology used to define the bearing capacity parameters is corrected as explained in the response to Item (a) above.

(d) Finite element foundation uplift analyses are performed only for the selected critical load case as described in the response to Item (a) above. The results for foundation reaction forces and moments of the seismic response analyses of four subgrade generic conditions, presented in Subsection 3.7.2 of the DCD, are used to calculate foundation load eccentricities as described in the response to Open Item RGS1 2.5.4. The calculations consider the following combinations of the responses in three directions of the earthquake, north-south (S_{NS}), east-west (S_{ew}) and vertical (S_V) that are combined using the Newmark 100-40-40 method:

LC1: $DL + 0.25\ LL + S_{NS} + 0.4\ S_{EW} + 0.4\ S_V$

LC2: $DL + 0.25\ LL + S_{NS} + 0.4\ S_{EW} - 0.4\ S_V$

LC3: $DL + 0.25\ LL + 0.4\ S_{NS} + S_{EW} + 0.4\ S_V$

LC4: $DL + 0.25\ LL + 0.4\ S_{NS} + S_{EW} - 0.4\ S_V$

LC5: $DL + 0.25\ LL + 0.4\ S_{NS} + 0.4\ S_{EW} + S_V$

LC6: $DL + 0.25\ LL + 0.4\ S_{NS} + 0.4\ S_{EW} - S_V$

Effective contact areas are calculated for each soil case and each load combination using the Highter and Anders equations provided in Section 3.12 of Principles of Foundation Engineering, 6th Edition, Braja M. Das, Thomson Engineering, 2006. The average dynamic bearing pressure acting on the effective contact area is then calculated and used to select critical load cases. The table below summarizes the results of the calculations that are used to select the two critical load cases LC3 and LC4 that result in maximum bearing pressures. Variables used in the table are defined below.

Load Combination	Generic Soil Case			
	Soft	Medium 1	Medium 2	Hard Rock
LC1	$e_{NS} / L_{NS} = 0.09$	$e_{NS} / L_{NS} = 0.16$	$e_{NS} / L_{NS} = 0.13$	$e_{NS} / L_{NS} = 0.13$
	$e_{EW} / L_{EW} = 0.05$	$e_{EW} / L_{EW} = 0.09$	$e_{EW} / L_{EW} = 0.08$	$e_{EW} / L_{EW} = 0.08$
	$q_{ave} = 11.4\ ksf$	$q_{ave} = 11.8\ ksf$	$q_{ave} = 11.9\ ksf$	$q_{ave} = 12.0\ ksf$
LC2	$e_{NS} / L_{NS} = 0.12$	$e_{NS} / L_{NS} = 0.22$	$e_{NS} / L_{NS} = 0.18$	$e_{NS} / L_{NS} = 0.19$
	$e_{EW} / L_{EW} = 0.07$	$e_{EW} / L_{EW} = 0.13$	$e_{EW} / L_{EW} = 0.11$	$e_{EW} / L_{EW} = 0.11$
	$q_{ave} = 9.0\ ksf$	$q_{ave} = 18.2\ ksf$	$q_{ave} = 15.4\ ksf$	$q_{ave} = 19.3\ ksf$
LC3	$e_{NS} / L_{NS} = 0.04$	$e_{NS} / L_{NS} = 0.06$	$e_{NS} / L_{NS} = 0.05$	$e_{NS} / L_{NS} = 0.05$
	$e_{EW} / L_{EW} = 0.14$	$e_{EW} / L_{EW} = 0.24$	$e_{EW} / L_{EW} = 0.21$	$e_{EW} / L_{EW} = 0.20$
	$q_{ave} = 11.4\ ksf$	$q_{ave} = 24.3\ ksf$	$q_{ave} = 21.3\ ksf$	$q_{ave} = 17.4\ ksf$
LC4	$e_{NS} / L_{NS} = 0.05$	$e_{NS} / L_{NS} = 0.09$	$e_{NS} / L_{NS} = 0.07$	$e_{NS} / L_{NS} = 0.07$
	$e_{EW} / L_{EW} = 0.17$	$e_{EW} / L_{EW} = 0.32$	$e_{EW} / L_{EW} = 0.29$	$e_{EW} / L_{EW} = 0.28$
	$q_{ave} = 13.9\ ksf$	$q_{ave} = 24.1\ ksf$	$q_{ave} = 20.6\ ksf$	$q_{ave} = 14.4\ ksf$
LC5	$e_{NS} / L_{NS} = 0.03$	$e_{NS} / L_{NS} = 0.05$	$e_{NS} / L_{NS} = 0.04$	$e_{NS} / L_{NS} = 0.04$
	$e_{EW} / L_{EW} = 0.05$	$e_{EW} / L_{EW} = 0.08$	$e_{EW} / L_{EW} = 0.07$	$e_{EW} / L_{EW} = 0.06$
	$q_{ave} = 13.2\ ksf$	$q_{ave} = 14.2\ ksf$	$q_{ave} = 14.4\ ksf$	$q_{ave} = 14.7\ ksf$
LC6	$e_{NS} / L_{NS} = 0.06$	$e_{NS} / L_{NS} = 0.12$	$e_{NS} / L_{NS} = 0.10$	$e_{NS} / L_{NS} = 0.11$
	$e_{EW} / L_{EW} = 0.09$	$e_{EW} / L_{EW} = 0.18$	$e_{EW} / L_{EW} = 0.16$	$e_{EW} / L_{EW} = 0.16$
	$q_{ave} = 7.2\ ksf$	$q_{ave} = 11.5\ ksf$	$q_{ave} = 6.0\ ksf$	$q_{ave} = 5.8\ ksf$

e_{NS} = maximum eccentricity of foundation load in north-south direction, based on seismic response analysis results for foundation reation forces and moments

e_{EW} = maximum eccentricity of foundation load in east-west direction, based on seismic response analysis results for foundation reation forces and moments

L_{NS} = length of foundation in north-south direction

L_{EW} = length of foundation in east-west direction

q_{ave} = average dynamic bearing pressure acting on the effective contact area underneath the foundation, used to select the critical load cases for determing maximum foundation bearing pressure

Impact on DCD

See Attachment 1 for the mark-up of DCD Tier 2, Section 3.8, changes to be incorporated.

- Replace the fourth paragraph of Subsection 3.8.5.4.1 to the following:

  "The minimum allowable subgrade bearing capacity of 15,000 psf represents the maximum bearing pressure resulting from the static load cases for the R/B-PCCV-containment internal structure common foundation, while the minimum allowable dynamic soil bearing capacity of 60,000 psf represents the maximum bearing pressure resulting from Normal plus SSE loads. These bearing pressures envelope the foundation bearing pressures for all other standard plant building structures."

Impact on COLA

There is no impact on the COLA.

Impact on PRA

There is no impact on the PRA.

RESPONSE TO REQUEST FOR ADDITIONAL INFORMATION

7/03/2009

US-APWR Design Certification

Mitsubishi Heavy Industries

Docket No. 52-021

RAI NO.:	**NO. 340-2004 REVISION 0**
SRP SECTION:	**03.08.05 - FOUNDATIONS**
APPLICATION SECTION:	**03.08.05**
DATE OF RAI ISSUE:	**04/21/09**

QUESTION NO. RAI 03.08.05-06:

In DCD Subsection 3.8.5.4.2, the second paragraph states, "The combined global FE model of the R/B, PCCV, and containment internal structure, including basemat, is presented on Figures 3.8.5-5 through 3.8.5-10."

The applicant is requested to provide the following information:

In DCD Figure 3.8.5-10, it is indicated in the figure caption that solid elements were used to model the basemat, and in DCD Table 3.8.1-4 it is indicated that shell elements were used to model the PCCV. Also, in DCD Subsection 3.8.3.4.1, it states that the SC modules were modeled by the shell elements. Since the shell element has six degrees of freedom and the solid element has only three translational degrees of freedom for every node, explain how shell elements are connected to the solid elements.

ANSWER:

In the three-dimensional FE models shown in Figures 3.8.5-5 through 3.8.5-10, shell elements have six degrees of freedom and solid elements have three translational degrees of freedom for every mode. In order to keep continuity of stress and deformation, additional elements should be used as shown in Figure 1.

Connection	Connection between PCCV Shell and Basemat Brick Elements	Connection between R/B Exterior Shell and Basemat Brick Elements
FE Model	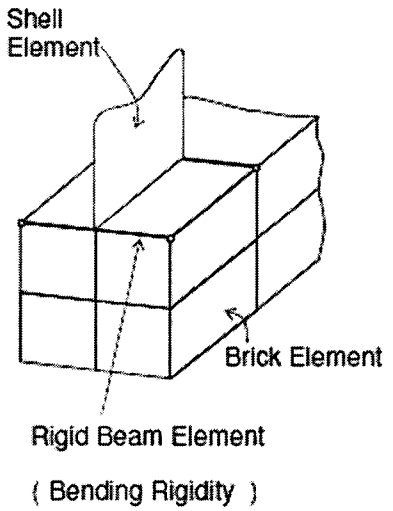	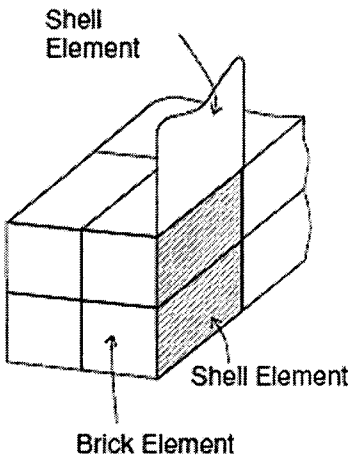

Figure 1 Connection Modeling of Elements of Different Type

Impact on DCD

There is no impact on the DCD.

Impact on COLA

There is no impact on the COLA.

Impact on PRA

There is no impact on the PRA.

RESPONSE TO REQUEST FOR ADDITIONAL INFORMATION

7/03/2009

US-APWR Design Certification

Mitsubishi Heavy Industries

Docket No. 52-021

RAI NO.:	**NO. 340-2004 REVISION 0**
SRP SECTION:	**03.08.05 - FOUNDATIONS**
APPLICATION SECTION:	**03.08.05**
DATE OF RAI ISSUE:	**04/21/09**

QUESTION NO. RAI 03.08.05-07:

In DCD Subsection 3.8.5.4.2, the first paragraph (Page 3.8-72) states, "The vertical spring at each node in the analytical model act in compression only. The horizontal springs are active when the vertical spring is in compression and inactive when the vertical spring lifts off."

The application is requested to provide the following information:

(a) Describe how the vertical and horizontal spring constants were calculated.

(b) Are there horizontal springs for every node? Are the spring constants for the vertical springs and the horizontal springs used in the analyses for the NASTRAN FE model the same for both the static and dynamic loadings?

(c) DCD Figure 3.8.5-3 (Page 3.8-217) shows that the bottom of the basemat for the reactor building is not all at the same elevation. The elevation of the bottom of the central region of the basemat is about 10 feet above that of the peripheral portion of the basemat. Provide answers for the following bounding conditions for analysis:

(1) It is conceivable that the soil in the central region under the PCCV could consolidate, or settle, such that the central slab would not be in complete, or effective, contact with the soil.

(2) On the other hand, it is also conceivable that since the soil column in the central region has a higher degree of confinement, it may have higher vertical stiffness than the soil in the peripheral region. As a result, some or all of the whole structure would be supported on the central soil column.

Have these two bounding cases (1) and (2) above considered in the foundation design? If not, provide technical basis for not considering these two cases.

ANSWER:

A similar topic was covered in the response to Question 3.8.1-5 of RAI 223-1996.

(a) The boundary conditions of basemat are evaluated by modeling the areas at the bottom of the basemat with spring elements. Accordingly, the directional (Vertical, NS Horizontal and EW Horizontal) soil springs with only axial stiffness at the cross point (node) of divided element mesh on the basemat bottom plane are adopted.

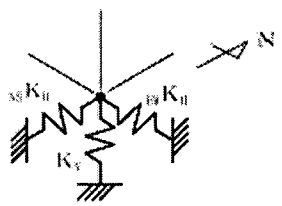

The soil spring constant for each of the three directions per unit area for the FE model is calculated using the dynamic soil spring seismic response analysis model (shown in US-APWR DCD Rev.1 Appendix 3H) as shown in Table 1.

Table 1: Soil Spring Constants for FE Model

(Unit: lb/in^3)

Direction	Horizontal (k_h)	Vertical(k_0)	
		Method 1(k_{V1})	Method 2(k_{V2})
Soil Spring Constants	$(K_{H\text{-}NS} + K_{H\text{-}EW})/(2A)$	K_V/A	$(K_{R\text{-}NS}/J_{NS} + K_{R\text{-}EW}/J_{EW})/2$

Where,

K_H, K_V, K_R: Dynamic soil springs of the horizontal, vertical, and rotational direction of the seismic response analysis model (see Table 3)

A: Area of basemat at bottom $(9.49 \cdot 10^6 in^2)$

J: Geometrical moment of inertia at basemat $(J_{NS} = 1.09 \cdot 10^{13} in^4, J_{EW} = 5.18 \cdot 10^{12} in^4)$

The vertical soil spring constants, k_{V1} and K_{V2} in Table 1, are used in accordance with the load combinations as shown in Table 2.

Table 2(a): Vertical Soil Spring Constants in Accordance with Load Combinations

Conditions of Load combination		Vertical soil spring constant (k_V)
With Earthquake loads		k_{V1}
Without Earthquake loads	Horizontal direction for dominant loading (either NS or EW)	k_{V2}
	Vertical direction for dominant loading	k_{V1}

Table 2(b): Dynamic Soil Springs of Seismic Response Analysis Model

Direction	Soil	K_H $\times 10^6$lb/in	K_R $\times 10^{14}$lb·in/rad
NS	Soft	1.89	7.83
	Medium1	26.4	105.
	Medium2	98.2	389.
EW	Soft	2.05	4.57
	Medium1	28.6	61.0
	Medium2	106.	227.
Direction	Soil	K_V $\times 10^6$lb/in	
Vertical	Soft	2.62	
	Medium1	35.0	
	Medium2	130.	

Table 2(c): Subgrade Coefficient Values

Type of soil spring		Subgrade coefficient value (lb/in^2)		
		Soft soil	Rock site (Medium 1)	Rock site (Medium 2)
k_h		20.8	290	1080
k_v	k_{v1}	27.6	1370	2200
	k_{v2}	80.1	3980	6390

(b) Yes, there are horizontal springs for every node.

The static loading spring constants used for the vertical and horizontal springs in the NASTRAN FE model are the same values of those used for the dynamic loadings.

(c) It is not necessary to consider the bounding conditions with the soil column at the dent of the central region of the basemat bottom, because that part will be filled by concrete, not soil, which is unified with the basemat.

Impact on DCD

There is no impact on the DCD.

Impact on COLA

There is no impact on the COLA.

Impact on PRA

There is no impact on the PRA.

RESPONSE TO REQUEST FOR ADDITIONAL INFORMATION

7/03/2009

US-APWR Design Certification

Mitsubishi Heavy Industries

Docket No. 52-021

RAI NO.:	**NO. 340-2004 REVISION 0**
SRP SECTION:	**03.08.05 - FOUNDATIONS**
APPLICATION SECTION:	**03.08.05**
DATE OF RAI ISSUE:	**04/21/09**

QUESTION NO. RAI 03.08.05-08:

In DCD Subsection 3.8.5.4.2, the first paragraph (Page 3.8-72) states, "Soil springs are assigned in the model to determine the interaction of the basemat with the overlying structures and with the subgrade. The model is capable of determining the possibility of uplift of the basemat from the subgrade during postulated SSE events. The vertical spring at each node in the analytical model act in compression only."

1. In DCD Subsection 3.8.4.4.1, the fourth paragraph (Page 3.8-56) states, "Seismic forces are obtained from the dynamic analysis of the three-dimensional lumped-mass stick model described in Subsection 3.7.2."
2. In DCD Subsection 3.7.2.4, the second paragraph (Page 3.7-29) states "The lumped parameters representing the stiffness and damping properties of the SSI are calculated from the formulas presented in Table 3.3-3 that are in accordance with Subsection 3.3.4.2 of ASCE 4-98 (Reference 3.7-9)."

The stiffness and damping properties of the SSI presented in Table 3.3-3 of ASCE 4-98 (statement 2 above) assume that there is no separation between the foundation and the soil. This assumption is inconsistent with the FE model described in DCD Subsection 3.8.5.4.2 where the vertical springs may separate from the foundation (Statement 1 above).

The applicant is requested to explain this apparent inconsistency in the assumptions used for the mathematical models.

ANSWER:

The soil springs of the FE model are calculated by distributing the soil springs of the three-dimensional lumped-mass stick model to each node corresponding to the subjected area of each node. In the case of uplift on the basemat bottom plane in seismic conditions, the soil springs in tension are cut off. The sum of the remaining spring constant values are decreased accordingly corresponding to the uplifted area and the spring constants per unit area of the stick model and the FE model are the same. Therefore, there is no inconsistency between the two models.

Impact on DCD

There is no impact on the DCD.

Impact on COLA

There is no impact on the COLA.

Impact on PRA

There is no impact on the PRA.

RESPONSE TO REQUEST FOR ADDITIONAL INFORMATION

7/03/2009

US-APWR Design Certification

Mitsubishi Heavy Industries

Docket No. 52-021

RAI NO.:	**NO. 340-2004 REVISION 0**
SRP SECTION:	**03.08.05 - FOUNDATIONS**
APPLICATION SECTION:	**03.08.05**
DATE OF RAI ISSUE:	**04/21/09**

QUESTION NO. RAI 03.08.05-09:

In DCD Subsection 3.8.5.4.2, the first paragraph (Page 3.8-72) states, "Horizontal bearing reactions on the side walls below grade are conservatively neglected for the analysis of the basemat. However, horizontal forces are considered in the analysis of the wall."

The applicant is requested to provide the following information:

(a) Do the words "analysis of the basemat" include the stability analysis, such as sliding and overturning of, and the strength of, the basemat? Provide a technical basis which demonstrates that it is conservative to neglect the soil reactions on the side walls below grade for both the stability and strength of the basemat.

(b) Explain how the horizontal forces considered in the analysis and design of the wall were calculated.

ANSWER:

(a) The sentences quoted above were intended to describe the uplift analysis described in the preceding sentences of the same paragraph. The uplift and stability analyses consider the contribution to overturning and sliding forces caused by soil acting on the below-grade walls and basemat, but conservatively do not take credit for soil pressure in resisting overturning and sliding loads. This is conservative because any passive reaction forces acting on the side walls and basemat below grade will reduce the global sliding and overturning effects during the stability analysis. Soil pressures acting on the below grade side walls and basemat were considered for the strength design as discussed in (b) below. MHI recognizes that the last two sentences of the first paragraph of DCD Subsection 3.8.5.4.2 can be confusing, and they will be deleted for clarity.

(b) An explanation of the calculation method for horizontal forces acting on below-grade walls is presented in the response to Question RAI 3.7.2-13 of RAI 212-1950 Revision 1.

Impact on DCD

See Attachment 1 for a mark-up of DCD Tier 2, Section 3.8, changes to be incorporated.

- Delete the last two sentences in the first paragraph of Subsection 3.8.5.4.2: Horizontal bearing reactions on the side walls below grade are conservatively neglected for the analysis of the basemat. However, horizontal forces are considered in the analysis of the wall.

Impact on COLA

There is no impact on the COLA.

Impact on PRA

There is no impact on the PRA.

RESPONSE TO REQUEST FOR ADDITIONAL INFORMATION

7/03/2009

US-APWR Design Certification

Mitsubishi Heavy Industries

Docket No. 52-021

RAI NO.:	**NO. 340-2004 REVISION 0**
SRP SECTION:	**03.08.05 - FOUNDATIONS**
APPLICATION SECTION:	**03.08.05**
DATE OF RAI ISSUE:	**04/21/09**

QUESTION NO. RAI 03.08.05-10:

In DCD Subsection 3.8.5.4.2, the fifth paragraph (Page 3.8-72) states, "Linear analyses are performed for all specified load combinations assuming that the soil springs can not take tension. The results of the linear cases are then used to select critical load cases for non-linear analyses."

The applicant is requested to provide the following explanation:

(a) Explain how the linear analyses (mentioned in the first sentence above) were performed while the soil springs were assumed to be nonlinear (cannot take tension).

(b) Explain what are the non-linear analyses (mentioned in the second sentence above) and how they were performed.

ANSWER:

(a) The first sentence in the fifth paragraph of DCD Subsection 3.8.5.4.2 contained a typographical error. DCD Subsection 3.8.5.4.2 statement that the soil springs can not take tension has been revised to state that the soil springs can take tension in linear analyses.

(b) A non-linear analysis by a non-linear soil spring model is carried out to evaluate the effect of uplift of the basemat. The term "non-linear" analysis for this purpose is intended to mean that the basemat springs are evaluated as having only compression capability (no tension capability). The model is not analyzed as having hysteretic behavior. The analysis is carried out under the load combinations of dead load and fixed live loads in the seismic load combinations and the loads of E_{NS} (NS direction), E_{EW} (EW direction) E_{VT} (Vertical direction) in seismic loads through the 100-40-40 combination coefficient method. When the soil springs have uplift force by their tension cut-off function after adding the horizontal seismic forces of NS and EW directions as gradual increasing forces under the conditions of vertical dynamic seismic loads in addition to the dead load and fixed live loads, all soil springs of three directions (vertical and two horizontals) are eliminated in the analysis.

Impact on DCD

See Attachment 1 for a mark-up of DCD Tier 2, Section 3.8, changes to be incorporated.

- Change the first sentence in the fifth paragraph of Subsection 3.8.5.4.2 to the following: "Linear analyses are performed for all specified load combinations assuming that the soil springs can take tension."

Impact on COLA

There is no impact on the COLA.

Impact on PRA

There is no impact on the PRA.

RESPONSE TO REQUEST FOR ADDITIONAL INFORMATION

7/03/2009

US-APWR Design Certification

Mitsubishi Heavy Industries

Docket No. 52-021

RAI NO.:	**NO. 340-2004 REVISION 0**
SRP SECTION:	**03.08.05 - FOUNDATIONS**
APPLICATION SECTION:	**03.08.05**
DATE OF RAI ISSUE:	**04/21/09**

QUESTION NO. RAI 03.08.05-11:

In DCD Subsection 3.8.5.4.3 (Page 3.8-73), the paragraph states: "The basemat subgrade is represented by springs. The spring constants for rotations and translations are determined based on the soil parameters. Springs are attached to the bottom of the basemat, and the constraints by side soil are not considered in the model. The values of the springs used in the analysis are shown below."

The applicant is requested to provide the following explanation:

(a) How the spring constants for rotations and translations are calculated, and where are the values of the springs presented in the DCD? If the values are not in the DCD, state the values.

(b) In DCD Subsection 3.8.5.4.2 (Page 3.8-72), only translational springs were mentioned. Is the FE model described in DCD Subsection 3.8.5.4.2 different from the one described in this DCD Subsection 3.8.5.4.3?

(c) The FE model uses solid element for the basemat. Explain how the rotational springs are connected to the solid element.

(d) The last sentence in the quote above states that the values of the springs used in the analysis are shown below. However, the staff could not find these spring values. Provide all spring values used for the analyses.

ANSWER:

(a) The response to RAI 223-1996, Question 3.8.1-5, Part (a), stated that all spring values for the FE model are determined based on the SSI lumped parameter values listed in Table 3H.2-14 of DCD Appendix 3H. The vertical spring stiffnesses are also developed in a manner such that the cumulative vertical stiffness is equivalent to the vertical SSI spring constant value in Table 3H.2-14.

(b) The response to RAI 223-1996, Question 3.8.1-5, Part (a), also clarified that the individual nodal springs of the FE model do not have rotational stiffness, but only

translational stiffnesses. The vertical stiffnesses of the FE model nodal springs are varied to replicate the rotational spring values given for the dynamic model as given in Table 3H.2-14. Those values are used to assign spring values to the individual nodes of the FE model.

The response to RAI 223-1996, Question 3.8.1-5, Part (a), indicated DCD Subsection 3.8.5.4.3 would be revised to clarify that individual nodal springs do not have rotational stiffness, however the RAI Impact on DCD inadvertently did not include this change. Therefore, the Impact on DCD provided below is applicable to Subsection 3.8.5.4.3 for both RAI 223-1996, Question 3.8.1-5 and this RAI 340-2004, Question 3.8.5-11.

(c) As noted in the response to Part (b), rotational springs are not applicable. The vertical stiffnesses of the FE model nodal springs are varied to replicate the rotational spring values given for the dynamic model as given in Appendix 3H, Table 3H.2-14.

(d) As noted above, the values of springs are provided in Table 3H.2-14. The fourth sentence in Subsection 3.8.5.4.3 is to be removed.

Impact on DCD

See Attachment 1 for a mark-up of DCD Tier 2, Section 3.8, changes to be incorporated.

- Change the paragraph in Subsection 3.8.5.4.3 to the following:

  "The basemat subgrade in the FE model is represented by translational spring elements that are attached to the bottom of the basemat. The stiffness of the backfill around the below-grade walls is not considered in the model. Subgrade coefficients, determined based on the SSI lumped parameter values listed in Table 3H.2-14 of Appendix H, are used to assign spring values to the individual nodes of the FE model. These subgrade coefficients are multiplied by the basemat nodal point tributary areas to compute the spring constants assigned to the nodal points. The vertical spring stiffnesses are also developed in a manner such that the cumulative vertical stiffness is equivalent to the vertical SSI spring constant value in Table 3H.2-14."

Impact on COLA

There is no impact on the COLA.

Impact on PRA

There is no impact on the PRA.

RESPONSE TO REQUEST FOR ADDITIONAL INFORMATION

7/03/2009

US-APWR Design Certification

Mitsubishi Heavy Industries

Docket No. 52-021

RAI NO.:	**NO. 340-2004 REVISION 0**
SRP SECTION:	**03.08.05 - FOUNDATIONS**
APPLICATION SECTION:	**03.08.05**
DATE OF RAI ISSUE:	**04/21/09**

QUESTION NO. RAI 03.08.05-12:

In DCD Section 3.8.5.4.4, the first paragraph (Page 3.8-73) states, "The potential for foundation subsidence, or differential displacement, is designed for a maximum 2 in. based on enveloping properties of subsurface materials."

The applicant is requested to provide the following information:

(a) How was the maximum value of 2 in. determined?

(b) Do the shear force and bending moments generated from the 2 in. differential displacement combine with those from load cases in DCD Subsections 3.8.1.3 and 3.8.4.3 for the design of the basemat and the super-structures?

ANSWER:

(a) In the response to Open Item RGS1 2.5.4, the DCD Tier 1, Table 2.1-1, and the DCD Tier 2, Table 2.0, are revised to specify a maximum differential displacement of 2 in. across the Reactor Building (R/B) complex basemat foundation. This parameter serves as indicator of sufficient stiffness and acceptable uniformity of the subgrade. The specified value is obtained considering settlements of the R/B complex foundation when supported by a subgrade which stiffness corresponding to the static stiffness of the "soft soil" generic subsurface condition. Subsection of the DCD defines the stiffness of the "soft soil" generic condition as that of a uniform half space with shear wave velocity Vs = 1,000 feet per seconds. A finite element analysis of the R/B complex foundation on elastic subgrade provided the maximum short-term elastic settlement of the foundation under the static design load combination of dead loads and live loads (*DL+LL*). The specified maximum differential settlement represents one third (1/3) of the estimated maximum settlement of the R/B complex foundation.

As described in the response to Question 3.8.5-7 of this RAI, subgrade coefficients are developed for the finite element analyses of the R/B complex foundation that are based on the values of the lumped soil-structure interaction (SSI) stiffness parameters used to represent the stiffness of the subgrade in the seismic response analyses described in

Subsection 3.7.2. A value of 27.6 lb/in^3 is calculated to represent the stiffness of the "soft soil" generic subgrade under short term load conditions. The settlement analysis uses a subgrade coefficient of 13.8 lb/in^3 that is one half the value of the dynamic coefficient. This value is deemed adequate to represent the stiffness of the "soft soil" subgrade for calculations of long-term foundation settlements under static load conditions.

(b) The possible shear forces and bending moments that are due to the specified maximum differential settlement are not combined with the load cases in DCD Subsections 3.8.1.3 and 3.8.4.3 for design of the basemat and the superstructure. The specified 2.0 inch maximum differential settlement is used as reference for the design of the gaps between the buildings as discussed in the response to Question 3.8.4-2 of RAI 2000. As explained below, the stresses generated by differential settlements under static loading conditions are deemed not critical for the design of the foundation or the superstructure.

As discussed in the response to Item (a), the specified 2.0 inch maximum differential settlement under normal static load combination is associated with softer subgrade conditions. The reactor building complex is supported by a massive reinforced concrete mat foundation which thickness varies from 119 inches under the R/B basement to 478 inches under the reactor containment. Since the stiffness of the R/B foundation is much higher than the stiffness of the supporting subgrade, the variation of the subgrade stiffness will result in maximum differential settlement along the basemat foundation that will be manifested by tilting of the building. Under these circumstances, the elastic deformations of the basemat will be much smaller than the 2.0 inches, and their value will be close to those calculated considering basemat supported by a uniform subgrade under normal load conditions.

In the response to Question 3.8.5-15 of this RAI, the load combinations representing extreme environmental conditions are identified as those that governed the design of the R/B complex reinforced concrete structure. The combinations of loads that result in an uplift of the foundation are identified as critical for the design of the R/B complex foundation. The forces and bending moments in the basemat resulting from the uplift are with magnitudes much higher than those associated with differential settlements under static load conditions. The combination of the uplift loads with differential settlement loads is not applicable since the uplift results in a redistribution of the stresses in the foundation that are due to differential settlement under static conditions.

Impact on DCD

There is no impact on the DCD.

Impact on COLA

There is no impact on the COLA.

Impact on PRA

There is no impact on the PRA.

RESPONSE TO REQUEST FOR ADDITIONAL INFORMATION

7/03/2009

US-APWR Design Certification

Mitsubishi Heavy Industries

Docket No. 52-021

RAI NO.:	**NO. 340-2004 REVISION 0**
SRP SECTION:	**03.08.05 - FOUNDATIONS**
APPLICATION SECTION:	**03.08.05**
DATE OF RAI ISSUE:	**04/21/09**

QUESTION NO. RAI 03.08.05-13:

In DCD Subsection 3.8.5.4.4, the third paragraph (Page 3.8-74) states, "The basemat FE model is analyzed for various phases of construction, including the determination of displacement."

The applicant is requested to provide the following information:

(a) Were both the immediate settlement and the settlement due to consolidation included in the displacement calculations?

(b) Describe how these settlements were calculated.

(c) Was the effect of nearby structures' weights included in the settlement calculation?

ANSWER:

(a) As part of the site-specific validation, the COL Applicant's investigation is to demonstrate that the structural integrity of the basemat and the superstructure is maintained during various phases of construction. The settlements corresponding to different phases of construction are determined based on site-specific subgrade properties considering site-specific construction loads and sequences. The settlement calculations consider the immediate settlements due to elastic deformations, dewatering and immediate consolidation, and when applicable, the settlements due to long term consolidation, heave and/or creep. The determined site-specific values of foundation differential settlement are compared to those considered by the standard design of the foundation that are calculated as described in the responses to Item (b) below and Question 3.8.5-14 of this RAI. If the results of the site-specific settlement investigation indicate construction settlements that are larger than those considered during the standard design or if the site-specific construction sequence is different than the expected construction sequence considered in the standard design, the COL Applicant must demonstrate that the standard design of the basemat reinforcement is sufficient to ensure the structural integrity of the basemat under the site-specific conditions.

(b) A set of foundation settlement analyses are performed to evaluate the effects of an expected construction sequence on the standard design of the R/B complex foundation. Selected main stages in the expected construction sequence are considered. The evaluation considers the "soft soil" subgrade conditions in order to obtain bounding settlement results. In order to estimate the immediate as well as the total (immediate + long term) settlements of the foundation, the following two values of the elastic subgrade coefficient are used:

- k_s = 27.6 lb/in^3 for calculation of immediate settlements
- k_s = 13.8 lb/in^3 for calculation of total (immediate + long term) settlements.

A more detailed description of the models, construction loads and methodology used to calculate the settlement of the foundation during the first stages of the expected construction sequence is provided in the response to Question 3.8.5-14 of this RAI.

(c) The effects of the nearby structures are not considered in the analyses performed to address the effects of construction settlements on the standard design of the R/B complex common basemat. Since the magnitudes of the bearing pressure under the surrounding foundations are less than half of the bearing pressure under the common basemat of the R/B complex, it is reasonable to expect that for the majority of candidate sites their effect will not be significant. The comparison of the bearing pressure under the foundations of the US-APWR plant is provided in the response to Question 3.7.2-7of RAI 212-1950. The layout of the facilities that are not part of the US-APWR standard plant and are designed on site-specific basis can change from site to site depending on the site-specific conditions. Accordingly, the sequence of construction of the facilities located in the vicinity of the R/B complex can vary based on site specific conditions or demands. Therefore, the COL Applicant is responsible to investigate the effects of the settlement generated by the nearby structures on site-specific basis and demonstrate that they do not compromise the structural integrity of the R/B complex or the function of important to safety equipment.

Impact on DCD

There is no impact on DCD.

Impact on COLA

There is no impact on the COLA.

Impact on PRA

There is no impact on the PRA.

RESPONSE TO REQUEST FOR ADDITIONAL INFORMATION

7/03/2009

US-APWR Design Certification

Mitsubishi Heavy Industries

Docket No. 52-021

RAI NO.:	**NO. 340-2004 REVISION 0**
SRP SECTION:	**03.08.05 - FOUNDATIONS**
APPLICATION SECTION:	**03.08.05**
DATE OF RAI ISSUE:	**04/21/09**

QUESTION NO. RAI 03.08.05-14:

In DCD Subsection 3.8.5.4.4, the fourth paragraph (Page 3.8-74) states, "Subsequent to the placement of the concrete foundation, walls, and containment internal structure, the basemat is significantly stiffened, minimizing any further tendency of differential settlement."

Placing concrete for walls and containment structures imposes additional loads on the concrete foundation (basemat), and may create additional settlement and differential settlement for the basemat.

The applicant is requested to:

(1) describe its analytical method used to calculate the settlement and differential settlements of the basemat with respect to the proposed construction sequences, and

(2) provide the curves of the basemat settlement vs. different stages of construction, and differential settlements of the basemat vs. different stages of construction, for the four types of soil conditions assumed in the DCD.

Use the curves/data provided in response to (2) above to substantiate the claim that "...the basemat is significantly stiffened, minimizing any further tendency of differential settlement."

ANSWER:

Subsection 3.8.5.4.4 of the DCD will be revised to delete the last sentence of the second paragraph, and the last sentence of the fourth paragraph.

(1) The results from finite element (FE) analyses of the Reactor Building (R/B) basement resting on elastic subgrade are used to addresses the effects of the settlements generated during an expected sequence of construction of the R/B complex consisting of the prestressed concrete containment vessel (PCCV), the R/B, the containment internal structure and their common basemat.

The evaluation considers the following initial stages of construction:

(a) The first 10 ft thick layer of basemat concrete is cast in a single placement, or a series of checkerboard placements in close proximity of time.

(b) The remaining part of the reactor foundation and the R/B basement walls are cast in a single placement;

(c) The slabs at ground elevation are cast in a single placement;

(d) The PCCV and the containment internal structure are constructed and the reactor is installed;

(e) The concrete is placed for the walls of the R/B first floor.

The FE model used to analyze construction stage (a) includes only the stiffness and the weight of the solid elements representing the portion of the basemat cast in the first placement of 10 ft thick layer of concrete. In order to simulate the construction loads exerted on the portion of the basemat cast in the first placement of concrete, the construction stage (b) model includes the self-weight of the undergrade portion of the R/B complex (the basemat and the R/B basement walls). A full concrete stiffness is assigned only to the elements modeling the already hardened portion of the basemat placed in construction stage (a). The construction stage (c) FE model includes the self weight of the undergrade portion of the R/B complex plus the weight of the slabs at grade elevation. A full concrete stiffness is assigned to the FE modeling the R/B complex common basemat and the R/B basement walls. The models used to analyze the settlement of the foundation during construction stages (d) and (e) include the stiffness and the weight of the basement. The construction loads of the containment internal structure, PCCV and the equipment it contains are applied at the top of the thick central proportion of the basemat. The loads from the construction of the first floor of the R/B superstructure are applied at the top rim of the basement walls.

The analyses consider the "soft soil" generic subgrade conditions that result in maximum settlements and differential settlements of the foundation and thus are critical for the design of the foundation basemat and the superstructure. Two values of the elastic subgrade coefficients are used representing "soft soil" generic subgrade stiffness:

- k_s = 27.6 lb/in^3 for calculation of immediate settlements
- k_s = 13.8 lb/in^3 for calculation of total (immediate + long term) settlements.

A total of 10 settlement analyses are performed, where each of the five initial construction sequence load case is analyzed using each of the two subgrade stiffness coefficients.

(2) The table below provides the results from the preliminary settlement analyses of the five major construction sequences considered for the critical "soft soil" generic subgrade condition.

Construction Stage	Load (kip)	Settlements (in)			
		k_s = 27.6 lb/in^3		k_s = 13.8 lb/in^3	
		average	differential	average	differential
(a)	101066	0.45	0.45	0.89	0.82
(b)	221000	0.87	0.76	1.74	1.36
(c)	248000	0.97	0.24	1.94	0.38
(d)	456400	1.69	1.14	3.43	1.63
(e)	485200	1.82	0.94	3.67	1.34

The results from the analyses of the settlements generated during the initial construction stage (c) show the effect of the stiffening contributed by the R/B basement walls. The critical stage for the basemat displacement is the construction stage (d) that is subsequent to the construction of the PCCV and the installation of the reactor heavy equipment. The subsequent construction of the R/B reinforced concrete structure helps redistribute the loads reducing the differential settlements of the basemat, as shown by the results from the analyses of construction stage (e).

Impact on DCD

See Attachment 1 for a mark-up of DCD Tier 2, Section 3.8, changes to be incorporated.

- Delete the last sentence of the second paragraph in Subsection 3.8.5.4.4: Consideration of settlement during construction, therefore, apply only to sites with alternating sand and clay soil layers.

- Delete the last sentence of the fourth paragraph in Subsection 3.8.5.4.4: Subsequent to the placement of the concrete foundation, walls, and containment internal structure, the basemat is significantly stiffened, minimizing any further tendency of differential settlement.

Impact on COLA

There is no impact on the COLA.

Impact on PRA

There is no impact on the PRA.

RESPONSE TO REQUEST FOR ADDITIONAL INFORMATION

7/03/2009

US-APWR Design Certification

Mitsubishi Heavy Industries

Docket No. 52-021

RAI NO.:	**NO. 340-2004 REVISION 0**
SRP SECTION:	**03.08.05 - FOUNDATIONS**
APPLICATION SECTION:	**03.08.05**
DATE OF RAI ISSUE:	**04/21/09**

QUESTION NO. RAI 03.08.05-15:

In DCD Subsection 3.8.5.4.5, the first paragraph (Page 3.8-74) states, "For the R/B Table 3.8.5-4 provides sectional thickness and reinforcement ratio of basemat used in the evaluation. Table 3.8.5-5 provides sectional thickness and reinforcement ratio of basemat used in the PS/B evaluation."

The applicant is requested to provide the following information:

In DCD Tables 3.8.5-4 and 3.8.5-5 add an extra column that provides information that identifies the control load case for each section listed. Please indicate in which revision of the DCD the revised tables will appear.

ANSWER:

The DCD will be revised to include an extra column in Tables 3.8.5-4 and 3.8.5-5 that provides information that identifies the control load case for each section. In addition, the numbering of locations in the first column will be changed to superscripts to align with the notes on Table 3.8.5-4 Sheet 2 of 2. These changes will appear in Revision 2 of the US-APWR DCD.

Impact on DCD

See Attachment 1 for a mark-up of DCD Tier 2, Section 3.8, changes to be incorporated.

- Replace Table 3.8.5-4 with the following:

Table 3.8.5-4 Section Thickness and Reinforcement Ratios of Basemat Used in the R/B, PCCV, Containment Internal Structure Evaluation (Sheet 1 of 2)

Location	Thickness (in)	Primary Reinforcement					Shear Tie		Control Load Case
		Position	Direction 1*		Direction 2*				
			Arrange-ment	Ratio (%)	Arrange-ment	Ratio (%)	Arrange-ment	Ratio (%)	
Upper Part of Tendon Gallery[1]	224 (18'-8")	Top	2-#18@1°	0.224	3-#14@12"	0.251	2-#11/2°@ 12"	0.813	Abnormal/ Extreme[7]
		Bottom	2-#14@1°	0.126	2-#14@12"	0.167			
Lower Part of Tendon Gallery[2]	124 (10'-4")	Top	2-#14@1°	0.228	2-#14@12"	0.303	2-#11/2°@ 24"	0.406	Abnormal/ Extreme[7]
		Bottom	3-#14@12"	0.454	3-#14@12"	0.454			Test[7]
Lower Part of Cavity[3]	139 (11'-7")	Top	2-#14@12"	0.270	2-#14@12"	0.270	#10@24"× 24"	0.220	Test[7]
		Bottom	3-#14@12"	0.405	3-#14@12"	0.405			Abnormal/ Extreme[7]
Inside Secondary Shield Wall of PCCV mat[4]	312 (26'-0")	Top	2-#14@12"	0.120	2-#14@12"	0.120	#10@24"× 24"	0.220	Abnormal/ Extreme[7]
		Bottom	3-#14@12"	0.180	3-#14@12"	0.180			
Outside Secondary Shield Wall of PCCV mat[5]	478 (39'-10")	Top	2-#18@1°	0.101	3-#14@12"	0.118	#10@12"× 24"	0.441	Abnormal/ Extreme[7]
		Bottom	3-#14@12" +1-#14@12"	0.157	3-#14@12" +1-#14@12	0.157			Abnormal 1.5Pa[7]
Outside Secondary Shield Wall of PCCV mat[5a]	458 (38'-2")	Top	2-#18@1°	0.106	3-#14@12"	0.123	#10@24"× 24"	0.220	Abnormal/ Extreme[7]
		Bottom	3-#14@12" +1-#14@12"	0.164	3-#14@12" +1-#14@12"	0.164			Test[7]
Other than Containment Basemat[6]	119 (9'-11")	Top	2-#14@12"	0.315	2-#14@12"	0.315	#9@36"× 36"	0.077	Load Case 6[7]
		Bottom	2-#14@12"	0.315	2-#14@12"	0.315			
Other than Containment Basemat[6a]	119 (9'-11")	Top	2-#14@12"	0.315	2-#14@12"	0.315	#10@12"× 12"	0.882	Load Case 4[7]
		Bottom	2-#14@12"	0.315	2-#14@12"	0.315			
Other than Containment Basemat[6b]	119 (9'-11")	Top	2-#14@12"	0.315	2-#14@12"	0.315	#10@24"× 24"	0.220	Load Case 4[7]
		Bottom	2-#14@12"	0.315	2-#14@12"	0.315			

- Change the left column of Note 5 on Table 3.8.5-4, Sheet 2 of 2, to the following:

  "5, 5a Outside Secondary Shield Wall"

- Add the following as Note 7 on Table 3.8.5-4, Sheet 2 of 2:

  "7 For the controlling load cases of locations 1 through 5a, see DCD Table 3.8.1-2. For controlling load cases of locations 6 through 6b, see DCD Table 3.8.4-3."

- Replace Table 3.8.5-5 with the following:

Table 3.8.5-5 Typical Reinforcement in PS/B Basemat

	Provided Reinforcement		
	NS-Dir.	**EW-Dir.**	**Shear**
Concrete Thickness 100 in.			
Control Load Combination Case	None (Minimum Requirement)	None (Minimum Requirement)	-
Top	#11@12"+#11@12"	#11@12"+#11@12"	-
Bottom	#11@12"+#11@12"	#11@12"+#11@12"	-

Note: ( ) shows the reinforcement ratio.

Impact on COLA

There is no impact on the COLA.

Impact on PRA

There is no impact on the PRA.

RESPONSE TO REQUEST FOR ADDITIONAL INFORMATION

7/03/2009

US-APWR Design Certification

Mitsubishi Heavy Industries

Docket No. 52-021

RAI NO.:	**NO. 340-2004 REVISION 0**
SRP SECTION:	**03.08.05 - FOUNDATIONS**
APPLICATION SECTION:	**03.08.05**
DATE OF RAI ISSUE:	**04/21/09**

QUESTION NO. RAI 03.08.05-16:

In DCD Subsection 3.8.5.5.1 (page 3.8-75), the Resisting moment, M_r, is defined as the dead load of the structure, minus the buoyant force created by the design ground water table, multiplied by the distance from the structure edge to the structure center of gravity.

The applicant is requested to provide the following information:

Is 100% of the dead load of the structure used in the calculation of the Resisting Moment? Per ACI 349-06 Section 9.2.3, 0.9D should be used. Provide an explanation if 0.9D is not used. This question also applies to D_r defined in DCD Subsection 3.8.5.5.3.

ANSWER:

100% of the dead load of the structure is used for purposes of stability analyses with respect to overturning, sliding, and flotation discussed in the second paragraph of DCD Subsection 3.8.5.5. Buoyancy forces which counteract the dead load are also considered in the stability evaluations. The load combinations considered for stability analyses, which are presented in Table 3.8.5-1 of the DCD and are consistent with item II.3 of SRP 3.8.5, do not utilize factored loads. The factored load combinations in Section 9.2 of ACI are applicable for determining the required strength. The load combinations considered for determining the required strength of seismic category I and II concrete structures are presented in Table 3.8.4-3. The load combinations in Table 3.8.4-3 utilize a factor of 0.9 for dead load where appropriate, as explained in Note 2 of the table.

Impact on DCD

There is no impact on the DCD.

Impact on COLA

There is no impact on the COLA.

Impact on PRA

There is no impact on the PRA.

7/03/2009

US-APWR Design Certification

Mitsubishi Heavy Industries

Docket No. 52-021

RAI NO.:	**NO. 340-2004 REVISION 0**
SRP SECTION:	**03.08.05 - FOUNDATIONS**
APPLICATION SECTION:	**03.08.05**
DATE OF RAI ISSUE:	**04/21/09**

QUESTION NO. RAI 03.08.05-17:

In DCD Subsection 3.8.5.5.2 (page 3.8-75), the notation F_s is defined as the shear (or sliding) resistance along the bottom of the structure basemat.

The applicant is requested to state how the F_s value was calculated. If the friction coefficient between the basemat and the supporting soils is used in the calculation, provide its value and the rationale for choosing that value.

ANSWER:

The shear (or sliding) resistance value, F_s, is calculated using the following equation:

$$F_S = \mu W = W \tan(\varphi)$$

Where,

μ = coefficient of friction = $\tan(\varphi)$
W = weight of structure for sliding resistance
φ = angle of internal friction

The coefficient of friction, μ, between the bottom of the foundation basemat and the supporting soil is dependent on the soil angle of internal friction. An angle of internal friction of 35 degrees was selected for use in the calculation of F_s for the standard plant. With this value, the calculated coefficient of friction is equal to 0.7. It should be noted that in the calculation of F_S, the value of W is reduced by the buoyancy effect of the design basis flood and/or ground water, as applicable.

Impact on DCD

There is no impact on the DCD.

Impact on COLA

There is no impact on the COLA.

Impact on PRA

There is no impact on the PRA.

RESPONSE TO REQUEST FOR ADDITIONAL INFORMATION

7/03/2009

US-APWR Design Certification

Mitsubishi Heavy Industries

Docket No. 52-021

RAI NO.:	**NO. 340-2004 REVISION 0**
SRP SECTION:	**03.08.05 - FOUNDATIONS**
APPLICATION SECTION:	**03.08.05**
DATE OF RAI ISSUE:	**04/21/09**

QUESTION NO. RAI 03.08.05-18:

In DCD Subsection 3.8.5.5, three factors of safety are defined. They are the factor of safety against overturning, FS_o, the factor of safety against sliding, FS_{sw} & FS_{se}, and the factor of safety against flotation, FS_f.

The applicant is requested to provide the following information:

> Provide a table tabulating values of these factors for the four subgrade conditions defined in DCD Subsection 3.8.5.4.1 and DCD Table 3.8.5-3.

During the calculation of these factors of safety, was the passive soil pressure against the vertical face of the basemat and exterior walls that were embedded in soils utilized? If yes, describe how the passive soil pressure and its distribution along the vertical side of the embedded basemat and walls were calculated.

ANSWER:

The passive soil pressure against the vertical face of the basemat and exterior walls embedded in soils is not considered for the calculation of the factors of safety. DCD Subsection 3.8.5.5.2 will be revised to add a note to the definition of the passive soil resistance variable F_P in two places to clarify that passive soil resistance is not relied upon for calculating the factor of safety against sliding for standard plant building structures.

Tables 1(1) and 1(2) shown below provide the values of the safety factors for the subgrade conditions defined in DCD Subsection 3.8.5.4.1 and DCD Table 3.8.5-3 for the R/B and the PS/Bs, respectively. The applicable load combinations are taken from DCD Table 3.8.5-1 and are based on SRP 3.8.5.

Table 1(1) Load Combinations and Safety Factors for R/B

Load Combination		Overturning (FS_{ot})		Sliding*1 (FS_{sl})		Flotation (FS_{fl})
		NS-dir.	EW-dir.	NS-dir.	EW-dir.	
D + H + W		91.0	65.5	62.7	57.0	N/A
D + H + E_s	Soft	3.87	2.92	1.85	1.87	N/A
	Medium 1	2.19	1.57	1.17	1.12	
	Medium 2	2.68	1.77	1.26	1.14	
D + H + W_t		44.6	32.1	30.7	27.9	N/A
D + F_b		N/A		N/A		4.39

*1 Friction angle (φ) : 35°

Table 1(2) Load Combinations and Structure Factors for PS/B

Load Combination		Overturning (FS_{ot})		Sliding*1 (FS_{sl})		Flotation (FS_{fl})
		NS-dir.	EW-dir.	NS-dir.	EW-dir.	
D + H + W		25.7	71.2	33.8	55.9	N/A
D + H + E_s	Soft	1.27	2.37	1.30	1.27	N/A
	Medium 1	1.22	1.92	1.34	1.45	
	Medium 2	1.28	1.96	1.34	1.26	
D + H + W_t		12.6	34.9	16.5	27.4	N/A
D + F_b		N/A		N/A		1.89

*1 Friction angle (φ) : 35°

Impact on DCD

See Attachment 1 for a mark-up of DCD Tier 2, Section 3.8, Revision 2, changes to be incorporated.

- Modify the definition of passive soil resistance F_P in two places in Subsection 3.8.5.5.2 to the following:

  "F_P = Resistance due to maximum passive soil pressure, neglecting any contribution of surcharge. No credit is taken for passive soil pressure in calculating the factor of safety against sliding in standard plant building structures."

Impact on COLA

There is no impact on the COLA.

Impact on PRA

There is no impact on the PRA.

RESPONSE TO REQUEST FOR ADDITIONAL INFORMATION

7/03/2009

US-APWR Design Certification

Mitsubishi Heavy Industries

Docket No. 52-021

RAI NO.:	**NO. 340-2004 REVISION 0**
SRP SECTION:	**03.08.05 - FOUNDATIONS**
APPLICATION SECTION:	**03.08.05**
DATE OF RAI ISSUE:	**04/21/09**

QUESTION NO. RAI 03.08.05-19:

In DCD Subsection 3.8.5.4, the third paragraph (Page 3.8-71) states, "The reinforced concrete basemat for the PCCV and enveloped containment internal structure are designed in accordance with ASME Code Section III, Division 2, Subsection CC (Reference 3.8-2). Other seismic category I basemats of reinforced concrete are designed in accordance with ACI-349 (Reference 3.8-8) and the provisions of RG 1.142 (Reference 3.8-19) where applicable. Table 3.8.5-2 identifies the material properties of concrete and Figure 3.8.5-4 delineates the governing codes based on region of the R/B, PCCV and containment internal structure basemat."

The applicant is requested to provide the following information:

(a) DCD Table 3.8.5-2 (page 3.8-108) indicates that in the basemat, 7,000 psi concrete is used at the upper part of Tendon Gallery and 4,000 psi concrete is used for the remaining portions of the Tendon Gallery. Since the modulus of elasticity of concrete is proportional to the square root of the compressive strength of concrete. The shrinkage and creep are functions of the modulus of elasticity; therefore, the concrete at the upper part of Tendon Gallery and the periphery will have different behaviors in shrinkage and in creep. Provide information for the action taken to control possible concrete cracking at the interface of these two different strength concretes.

(b) As it is shown in DCD Figure 3.8.5-4 (page 3.8-218), the common basemat for the PCCV and R/B are governed by two different codes, ASME Code Section III, Division 2 and the ACI-349. Explain how the design was performed for the foundation at the interface of these two codes.

(c) In DCD Figure 3.8.5-10 (Page 3.8-224), it is shown that three-dimensional solid element was used for the modeling of the common basemat. Explain how the results obtained from the Finite-Element analysis were split into primary and secondary stresses when checking against the ASME Code.

ANSWER:

(a) No special measures are taken to prevent concrete cracking in the basemat at the interface of the two different concrete strengths, however the general provisions of ACI 224R are applied in the basemat design. Potential cracking at this location is controlled by ensuring that there are adequate amounts of reinforcing bars. In evaluating the load combinations for the basemat, the bars are checked to assure that they are adequate to take any additional stresses that could be caused by the differences in creep and shrinkage properties of the concrete.

(b) The design of the basemat below the PCCV is governed by ASME Code Section III, Division 2 while the rest of the basemat design is in accordance with ACI-349. At the interface between these two codes, the larger amount of reinforcement required by either code will be used.

(c) The secondary stress considered in the basemat design in thermal stress. The stress analyses are carried out individually for each of the primary and secondary stresses. Therefore, checking against the ASME code allowable is divided into two cases when the section verifications are carried out. The primary case which does not include thermal stresses and the secondary case which does include thermal stresses.

Impact on DCD

There is no impact on DCD.

Impact on COLA

There is no impact on the COLA.

Impact on PRA

There is no impact on the PRA.

RESPONSE TO REQUEST FOR ADDITIONAL INFORMATION

7/03/2009

US-APWR Design Certification

Mitsubishi Heavy Industries

Docket No. 52-021

RAI NO.:	**NO. 340-2004 REVISION 0**
SRP SECTION:	**03.08.05 - FOUNDATIONS**
APPLICATION SECTION:	**03.08.05**
DATE OF RAI ISSUE:	**04/21/09**

QUESTION NO. RAI 03.08.05-20:

In DCD Subsection 3.8.5.6, the paragraph (Page 3.8-76) states, "Subsection 3.8.1.6 provides testing and surveillance requirements relating to the PCCV basemat."

The title for subsection 3.8.1.6 (Page 3.8-23) is "Material, Quality Control, and Special Construction Techniques" and that subsection does not have the information for testing and surveillance requirements. The required information is in DCD Subsection 3.8.1.7 (Page 3.8-27). The applicant is requested to correct this error.

ANSWER:

DCD Section 3.8.5.6 reference to Subsection 3.8.1.6 will be revised to incorporate the proper reference of Subsection 3.8.1.7.

Impact on DCD

See Attachment 1 for a mark-up of DCD Tier 2, Section 3.8, changes to be incorporated.

- Change the second sentence in the first paragraph of Subsection 3.8.5.6 to the following: "Subsection 3.8.1.7 provides testing and surveillance requirements relating to the PCCV basemat."

Impact on COLA

There is no impact on the COLA.

Impact on PRA

There is no impact on the PRA.

RESPONSE TO REQUEST FOR ADDITIONAL INFORMATION

7/03/2009

US-APWR Design Certification

Mitsubishi Heavy Industries

Docket No. 52-021

RAI NO.:	**NO. 340-2004 REVISION 0**
SRP SECTION:	**03.08.05 - FOUNDATIONS**
APPLICATION SECTION:	**03.08.05**
DATE OF RAI ISSUE:	**04/21/09**

QUESTION NO. RAI 03.08.05-21:

DCD Subsection 3.8.5.4.2 (page 3.8-72), first paragraph, states: "The major seismic category I structures basemat analyses use 3-dimensional NASTRAN FE models of the major seismic category I structures, which are described in Subsection 3.7.2.3."

Define the "major" structures cited in this subsection. Also, are there "minor" structures which have been analyzed?

ANSWER:

DCD Subsection 3.2.1.3 contains the classification of building structures, and references Table 3.2-4 for the designation of the seismic category of the US-APWR major buildings and structures. The major structures of the US-APWR standard plant, which are included in Table 3.2-4, have basemat analyses that utilize 3-dimensional NASTRAN FE models.

Minor structures are considered to be those non-safety buildings not listed in Table 3.2-4, and yard structures that are not listed in Table 3.2-4. The US-APWR standard plant does not have any safety-related, seismic category I yard structures. DCD Subsection 3.8.5 follows the guidance of RG 1.206, Section C.I.3.8.5, for its content, and does not describe the foundation designs of buildings and structures that are not seismic category I. DCD Subsections 3.7.2.8 and 3.3.2.3 do address potential effects of non-seismic category I structures on seismic category I structures. Minor buildings and yard structures may or may not utilize FE models in their foundation analyses.

Impact on DCD

There is no impact on the DCD.

Impact on COLA

There is no impact on the COLA.

Impact on PRA

There is no impact on the PRA.

RESPONSE TO REQUEST FOR ADDITIONAL INFORMATION

7/03/2009

US-APWR Design Certification

Mitsubishi Heavy Industries

Docket No. 52-021

RAI NO.:	**NO. 340-2004 REVISION 0**
SRP SECTION:	**03.08.05 - FOUNDATIONS**
APPLICATION SECTION:	**03.08.05**
DATE OF RAI ISSUE:	**04/21/09**

QUESTION NO. RAI 03.08.05-22:

In DCD Subsection 3.8.5.1,"Description of the Foundations", the second paragraph (Page 3.8-69) states, "The COL Applicant is to determine if the site-specific zone of maximum frost penetration extends below the depth of the basemats for the standard plant, and to pour lean concrete under any basemat above the frost line so that the bottom of lean concrete is below the maximum frost penetration level." The applicant is requested to provide the material specification for the lean concrete used in the construction of US-APWR foundations, including the minimum compressive strength.

ANSWER:

The mix designs as well as the material specifications for any concrete to be installed below the foundations of the US-APWR standard plant during construction are to be determined on a site-specific basis by the COL Applicant. The concrete specifications and mix designs will conform to the applicable codes and standards of ACI, such as ACI-349 and ACI-304R.

The DCD will be revised to state the use of fill concrete in lieu of lean concrete under basemats for the standard plant design. Refer to the response to Question 3.8.4-01, RAI 342–2000, for a detailed description of mat fill concrete to be used under seismic category I and II structures.

Impact on DCD

See Attachment 1 for a mark-up of DCD Tier 2, Section 3.8, changes to be incorporated.

- Change the second sentence in the second paragraph of Subsection 3.8.5.1 to the following: "The COL Applicant is to determine if the site-specific zone of maximum frost penetration extends below the depth of the basemats for the standard plant, and to pour fill concrete under the basemat above the frost line so that the bottom of fill concrete is below the maximum frost penetration level."

- Change COL 3.8(23) in Subsection 3.8.6 to the following:

"COL 3.8(23) The COL Applicant is to determine if the site-specific zone of the maximum frost penetration extends below the depth of the basemats for the standard plant, and to pour fill concrete under any basemat above the frostline so that the bottom of fill concrete is below the maximum frost penetration level."

See Attachment 2 for a mark-up of DCD Tier 2, Section 1.8, Revision 2, changes to be incorporated.

- Change COL 3.8(23) in Table 1.8-2 to the following:

COL 3.8(23)	*The COL Applicant is to determine if the site-specific zone of maximum frost penetration extends below the depth of the basemats for the standard plant, and to pour fill concrete under any basemat above the frost line so that the bottom of fill concrete is below the maximum frost penetration level.*

Impact on COLA

There is no impact on the COLA.

Impact on PRA

There is no impact on the PRA.

This completes MHI's responses to the NRC's questions.

3.8.5 Foundations

3.8.5.1 Description of the Foundations

Each building is isolated on a separate concrete basemat as identified in Subsection 3.8.4. The PCCV and the containment internal structure are integral with the R/B on a common basemat. Adjoining building basemats, such as the east and west PS/Bs, A/B, and T/B, are structurally separated by a 4 in. gap at and below the grade. This requirement does not apply to engineered mat fill concrete that is designed to be part of the foundation subgrade.

Basemats are located at a depth below the zone of maximum frost penetration, taken as 4 ft below grade. The COL Applicant is to determine if the site-specific zone of maximum frost penetration extends below the depth of the basemats for the standard plant, and to pour ~~lean~~ fill concrete under any basemat above the frost line so that the bottom of ~~lean~~ fill concrete is below the maximum frost penetration level.

3.8.5.1.1 Reactor Building and Enveloped Structures

The R/B, with the PCCV and containment internal structure at its center, is built on a common basemat and isolated from the adjacent A/B, east and west PS/Bs, and T/B. The basemat of the R/B is essentially a rectangular-shaped reinforced concrete mat and is composed of two parts. One part of the basemat is for the PCCV and containment internal structure, and the other part is for the remaining seismic category I basemat for the R/B. The length of the basemat in the north-south direction is 309 ft, 0 in., and in the east-west direction is 210 ft, 0 in. The central region, with a diameter of approximately 188 ft, 0 in., supports the PCCV and containment internal structure with a thickness varying from 11 ft, 7 in. to 38 ft, 2 in. The peripheral portion which supports the R/B is 9 ft, 11 in. thick.

The basemat includes hollow portions such as the tendon gallery, tendon gallery access tunnel, and other portions such as in-core chase and CV recirculation sump. Since the vertical tendons are anchored at the roof of the tendon gallery, the upper part of the tendon gallery is important from the structural point of view.

The basemat reinforcement consists of a top horizontal layer of reinforcement, a bottom horizontal layer of reinforcement, and vertical shear reinforcement. The bottom layer of reinforcement is arranged in a rectangular grid. The top layer of reinforcement is arranged in a rectangular grid at the center of the mat and radiates outward in a polar pattern in order to avoid interference with PCCV reinforcement. The top and bottom reinforcement at the upper portion of the tendon gallery is in a polar pattern.

Outlines of the R/B, PCCV and containment internal structure including the basemat are provided in Figures 3.8.5-1 through 3.8.5-3.

3.8.5.1.2 Power Source Buildings

The east and west PS/Bs are free-standing structures, each on an independent reinforced concrete basemat. Each PS/B basemat is a rectangular reinforced concrete mat with a thickness of 100 in. The bottom of basemat is at elevation -34 ft, 8 in.

Subsection CC (Reference 3.8-2). Figure 3.8.5-4 delineates basemat regions applicable to each Code.

3.8.5.4 Design and Analysis Procedures

Based on the premise that seismic category I buildings basemats are not supported on bedrock, a computer analysis of the SSI is performed for static and dynamic loads. Subsection 3.7.2 provides further information. Two types of SSI analyses are required for the R/B and the PS/Bs: an overall seismic analysis of the building for the superstructure design, and a local analysis of the basemat for its design. For the basemat design, the basemat is modeled using solid finite elements with springs representing the subgrade.

The seismic category I structures are concrete, shear-wall structures consisting of vertical shear/bearing walls and horizontal floor slabs designed to SSE accelerations as discussed in Section 3.7. The walls carry the vertical loads from the structure to the basemat. Lateral loads are transferred to the walls by the roof and floor slabs. The walls then transmit the loads to the basemat. The walls also provide stiffness to the basemat and distribute the loads between them.

The reinforced concrete basemat for the PCCV and enveloped containment internal structure are designed in accordance with ASME Code Section III, Division 2, Subsection CC (Reference 3.8-2). Other seismic category I basemats of reinforced concrete are designed in accordance with ACI-349 (Reference 3.8-8) and the provisions of RG 1.142 (Reference 3.8-19) where applicable. Table 3.8.5-2 identifies the material properties of concrete and Figure 3.8.5-4 delineates the governing codes based on region of the R/B, PCCV and containment internal structure basemat.

3.8.5.4.1 Properties of Subgrade

For purposes of the US-APWR standard design, the SSI effects are captured by considering three generic subgrade types utilizing frequency independent springs. A fourth subgrade condition is also considered, that of a foundation resting on hard rock. For the fourth condition, it is not necessary to consider SSI effects because the foundation is considered to be resting on a fixed base that is rigid. Subsection 3.7.2.4 provides further discussion relating to SSI and the selection of subgrade types.

The four supporting media (subgrade) conditions for the US-APWR design are provided in Table 3.8.5-3.

The properties of conditions provided in Table 3.8.5-3 are considered to represent stiffness properties of the subgrade material that are compatible to the strains generated in the soil by the input design ground motion. The dissipation of energy in the subgrade media due to the soil material damping is conservatively neglected. ~~The subgrade shear modulus is considered constant for the above subgrade conditions with shear wave velocities of 3,500 fps or higher. The constant subgrade shear modulus assumption is justified because the strains in subgrade materials with these shear velocities are very low. For the generic subgrade having a shear wave velocity of 1,000 ft/s, the shear modulus is reduced in accordance with Subsection 3.7.2.4 to account for changes in shear modulus due to relatively large strains.~~

The minimum allowable subgrade bearing capacity of 15,000 psf represents the maximum bearing pressures resulting from static load cases for the R/B-PCCV-containment internal structure common foundation, while the minimum allowable dynamic soil bearing capacity of 60,000 psf represents the maximum bearing pressure resulting from Normal plus SSE loads. These bearing pressures envelope the foundation bearing pressures for all other standard plant building structures. ~~An average subgrade bearing capacity of 15,000 psf is utilized for static load cases, while an average dynamic soil bearing capacity of 95,000 psf is used for Normal plus SSE loads.~~

The foundation depth-to-equivalent-radius ratio for the R/B-PCCV basemat is less than 0.3, which indicates a shallow embedment foundation for purposes of SSI as defined in ASCE 4-98, Subsection 3.3.4.2 (Reference 3.8-34). Embedment effects on the R/B and PCCV SSI analysis are neglected in the US-APWR standard plant design in obtaining the soil impedance functions. Therefore, conservatively, the R/B-PCCV seismic models are not coupled with any subgrade or backfill material at the sides of the basemat or along the faces of below-grade exterior walls, and no credit is taken in the seismic analysis for restraint due to the presence of these materials. Subsequently, there are no explicit requirements for shear wave velocity or other material characteristics requirements for the subgrade and/or backfill materials present on the sides of the basemat and R/B below-grade exterior walls. Subsection 3.7.2.4 provides additional discussion on the SSI analysis.

3.8.5.4.2 Analyses for Loads during Operation

The major seismic category I structures basemat analyses use 3-dimensional NASTRAN FE models of the major seismic category I structures, which are described in Subsection 3.7.2.3. Soil springs are assigned in the model to determine the interaction of the basemat with the overlying structures and with the subgrade. The model is capable of determining the possibility of uplift of the basemat from the subgrade during postulated SSE events. The vertical spring at each node in the analytical model act in compression only. The horizontal springs are active when the vertical spring is in compression and inactive when the vertical spring lifts off. ~~Horizontal bearing reactions on the side walls below grade are conservatively neglected for the analysis of the basemat. However, horizontal forces are considered in the analysis of the wall.~~

The three-dimensional FE model of the basemat includes the structures above the basemat and their effect on the distribution of loads on the basemat. The combined global FE model of the R/B, PCCV, and containment internal structure, including basemat, is presented on Figures 3.8.5-5 through 3.8.5-10.

The analysis considers normal and extreme environmental loads and containment pressure loads. The normal loads include dead loads and live loads. Extreme environmental loads include the SSE.

Dead loads are applied as inertia loads. Live loads and the SSE loads are applied as concentrated loads on the nodes. The SSE loads are applied as equivalent static loads using the assumption that while the maximum response from one direction occurs, the responses from the other two directions are 40% of the maximum. Combinations of the three directions of the SSE are considered.

Linear analyses are performed for all specified load combinations assuming that the soil springs can ~~not~~ take tension. The results of the linear cases are then used to select critical load cases for non-linear analyses. The results from these analyses include the forces, shears, and moments in the basemat; the bearing pressures under the basemat; and the area of the basemat that is uplifted. Minimum area of steel reinforcement is calculated from the section forces for the most critical load combinations.

The required reinforcement steel for the portion of the basemat under the R/B (other than PCCV) is determined by considering the reinforcement envelope for the full non-linear iteration of the most critical load combinations.

3.8.5.4.2.1 Global Three-Dimensional FE Modeling of Basemat

The stress conditions of the basemat are generated by numerous types of loads from the superstructure. The modeling of the basemat therefore involves evaluating the interaction between the basemat and the superstructures to determine the stress conditions at the interface. The global FE model is analyzed utilizing the FE computer program NASTRAN (Reference 3.8-13).

Regarding the R/B, the element division in a horizontal direction inside the secondary shield walls of containment internal structure is made in a rectangular grid and that outside the secondary shield wall is made in a polar pattern. Peripheral areas of the basemat are divided in a rectangular grid.

The upper portion of tendon gallery is considered with concentrated stresses created by the connection with the PCCV. This region is divided into four elements in the radial direction to better evaluate the stresses.

The basemat below the PCCV and the lower portion of containment internal structure are simulated with hexahedral solid elements. The elements below the PCCV are divided into three to fifteen parts in thickness, and elements in peripheral areas are divided into three parts. The FE modeling of the PS/Bs is provided in Subsection 3.8.4.4.

3.8.5.4.3 Boundary Conditions of Basemat

The basemat subgrade in the FE model is represented by translational springs elements that~~.~~ ~~The spring constants for rotations and translations are determined based on the soil parameters.~~ ~~Springs~~ are attached to the bottom of the basemat. The stiffness of the backfill around the below-grade walls is ~~and the constraints by side soil are~~ not considered in the model. ~~The values of the springs used in the analysis are shown below.~~ Subgrade coefficients, determined based on the SSI lumped parameter values listed in Table 3H.2-14 of Appendix H, are used to assign spring values to the individual nodes of the FE model. These ~~spring values~~ subgrade coefficients are multiplied by the basemat nodal point tributary areas to compute the spring constants assigned to the nodal points. The vertical spring stiffnesses are also developed in a manner such that the cumulative vertical stiffness is equivalent to the vertical SSI spring constant value in Table 3H.2-14.

3.8.5.4.4 Analyses of Settlement

The potential for foundation subsidence, or differential displacement, is designed for a maximum 2 in. based on enveloping properties of subsurface materials. This is a

conservative allowance that may not be applicable at all plant sites. Subsidence and differential displacement may therefore be reduced to less than 2 in. if justified by the COL Applicant based on site-specific soil properties.

Soil conditions for which settlement during construction is considered are identified in Chapter 2, Subsection 2.5.4. To evaluate the potential for settlement, soil conditions applicable to the US-APWR are considered to determine the enveloping design cases. Based on this assessment, soft soil sites with alternating sand and clay layers maximizes early stage settlement and impact of dewatering, while soft soil sites with clay maximize settlement in the long term. In any situation, conditions outside the boundaries of acceptable soils are removed and replaced using compatible structural fill. ~~Consideration of settlement during construction, therefore, apply only to sites with alternating sand and clay soil layers.~~

The basemat FE model is analyzed for various phases of construction, including the determination of displacement. The design is completed in accordance with ASME Section III, Division 2 (Reference 3.8-2) and ACI 349 (Reference 3.8-8) using applicable construction load combinations and factors provided in Table 3.8.4-3. Based on these analyses, the basemat is detailed and constructed to minimize any potential differential settlement during construction.

Early stages of basemat construction are most vulnerable to differential loading and deformations. The construction of the basemat is anticipated to be a continuous concrete placement. The differential settlement is susceptible immediately following the concrete placement when the ratio of the slab depth to length is very small. Measures to prevent settlement are implemented by dewatering the excavation pit and maintaining it dry during basemat placement, curing, and construction of exterior walls. ~~Subsequent to the placement of the concrete foundation, walls, and containment internal structure, the basemat is significantly stiffened, minimizing any further tendency to differential settlement.~~

In the event of suspended or sequenced construction, the basemat may remain unstiffened by the lack of shear walls for extended periods. Differential stresses in the basemat are also possible based on construction sequence, such as tension maximized on the top of the basemat due to the placement of foundation walls along the edge without additional mass and shear walls in the center of the basemat. The design of the basemat is sufficiently reinforced to control both compressive and tensile stresses until such time as the concrete placement of basemat walls and containment internal structure are completed. Therefore, the potential for differential settlement is controlled during alternative construction scenarios, until the basemat is stiffened by transverse shear walls.

3.8.5.5 Structural Acceptance Criteria

Structural acceptance criteria are discussed in detail in Subsections 3.8.1.5 and 3.8.4.5. The design soil conditions are as provided in Section 2.5, and the site-specific COL is to assure the design criteria listed in Chapter 2, Table 2.0-1 is met or exceeded.

Other load combinations applicable to the design of each seismic category I structure basemat include acceptance criteria for overturning, sliding, and flotation as detailed in Table 3.8.5-1. The factor of safety to each design load combination is calculated as indicated below, and compared to the minimum factors to assure stability of the building basemats.

3.8.5.5.1 Overturning Acceptance Criteria

The factor of safety against overturning is identified as the ratio of the moment resisting overturning (M_r) divided by the overturning moment (M_o). For SSE load cases, M_o is the maximum moment from the time history analyses of the applicable structure's lumped mass stick model in accordance with Section 3.7. Therefore,

$FS_o = [\, M_r / M_o \,]$, not less than FS_{ot} as determined from Table 3.8.5-1.

where

FS_o = Structure factor of safety against overturning by the maximum design basis wind, tornado, or earthquake load.

M_r = Resisting moment determined as the dead load of the structure, minus the buoyant force created by the design ground water table, multiplied by the distance from the structure edge to the structure center of gravity provided there is no overstress at the structure's edge.

M_o = Overturning moment caused by the maximum design basis wind, tornado, or earthquake load.

3.8.5.5.2 Sliding Acceptance Criteria

The factor of safety against sliding caused by wind or tornado is identified by the ratio:

$FS_{sw} = [\, F_s + F_p \,] / F_h$, not less than FS_{sl} as determined from Table 3.8.5-1,

where

FS_{sw} = Structure factor of safety against sliding caused by wind or tornado

F_s = Shear (or sliding) resistance along bottom of structure basemat

F_p = Resistance due to maximum passive soil pressure, neglecting any contribution of surcharge. No credit is taken for passive soil pressure in calculating the factor of safety against sliding in standard plant building structures.

F_h = Lateral force due to active soil pressure, including surcharge, and tornado or wind load, as applicableThe factor of safety against sliding caused by earthquake is identified by the ratio:

FS_{se} = [F_s + F_p] / [F_d + F_h], not less than FS_{sl} as determined from Table 3.8.5-1

where

FS_{se} = Structure factor of safety against sliding caused by earthquake

F_s = Shear (or sliding) resistance along bottom of structure basemat

F_p = Resistance due to maximum passive soil pressure, neglecting any contribution of surcharge. No credit is taken for passive soil pressure in calculating the factor of safety against sliding in standard plant building structures.

F_d = Dynamic lateral force, including dynamic active earth pressures caused by seismic loads

F_h = Lateral force due to all loads except seismic loads

3.8.5.5.3 Flotation Acceptance Criteria

The factor of safety against flotation is identified as the ratio of the total dead load of the structure including foundation (D_r) divided by the buoyant force (F_b). Therefore,

FS_f = D_r / F_b , not less than FS_{fl} as determined from Table 3.8.5-1.

where

FS_f = Structure factor of safety against flotation by the maximum design basis flood or ground water table.

D_r = Total dead load of the structure including foundation.

F_b = Buoyant force caused by the design basis flood or high ground water table, whichever is greater.

3.8.5.6 Materials, Quality Control, and Special Construction Techniques

Subsection 3.8.4.6 describes the materials, quality control, and special construction techniques applicable to seismic category I foundations, including water control structures and below-grade concrete walls and foundations. Subsection 3.8.1.7~~6~~ provides testing and surveillance requirements relating to the PCCV basemat.

COL 3.8(22) *The COL Applicant is to address monitoring of seismic category I structures in accordance with the requirements of NUMARC 93-01 (Reference 3.8-28) and 10 CFR 50.65 (Reference 3.8-29) as detailed in RG 1.160 (Reference 3.8-30).*

COL 3.8(23) *The COL Applicant is to determine if the site-specific zone of maximum frost penetration extends below the depth of the basemats for the standard plant, and to pour ~~loan~~ fill concrete under any basemat above the frost line so that the bottom of ~~loan~~ fill concrete is below the maximum frost penetration level.*

COL 3.8(24) *Other non-standard seismic category I buildings and structures of the US-APWR are designed by the COL Applicant based on site-specific subgrade conditions.*

COL 3.8(25) *The site-specific COL are to assure the design criteria listed in Chapter 2, Table 2.0-1, is met or exceeded.*

COL 3.8(26) *Subsidence and differential displacement may therefore be reduced to less than 2 in. if justified by the COL Applicant based on site specific soil properties.*

COL 3.8(27) *The COL Applicant is to specify normal operating thermal loads for site-specific structures, as applicable.*

COL 3.8(28) *The COL Applicant is to specify concrete strength utilized in non-standard plant seismic category I structures.*

COL 3.8(29) *The COL Applicant is to provide design and analysis procedures for the ESWPT, UHSRS, and PSFSVs.*

3.8.5.5 References

3.8-1 Combined License Applications for Nuclear Power Plants, RG 1.206, Rev. 0, U.S. Nuclear Regulatory Commission, Washington, DC, June 2007.

3.8-2 Rules for Construction of Nuclear Facility Components, Division 2, Concrete Containments. Section III, American Society of Mechanical Engineers, 2001 Edition through the 2003 Addenda (hereafter referred to as ASME Code).

3.8-3 Design Limits, Loading Combinations, Materials, Construction, and Testing of Concrete Containments. RG 1.136, U.S. Nuclear Regulatory Commission, Washington, DC, Revision 3, March 2007.

3.8-4 Rules for Inservice Inspection of Nuclear Power Plant Components. Section XI, American Society of Mechanical Engineers, 2001 Edition through the 2003 Addenda.

3.8-5 Inservice Inspection of Ungrouted Tendons in Pre-stressed Concrete Containments. RG 1.35, U.S. Nuclear Regulatory Commission, Washington, DC, Revision 3, July 1990.

Table 3.8.5-4 Section Thickness and Reinforcement Ratios of Basemat Used in the R/B, PCCV, Containment Internal Structure Evaluation (Sheet 1 of 2)

Location	Thickness (in)	Primary Reinforcement					Shear Tie		Control Load Case
		Position	Direction 1*		Direction 2*				
			Arrange-ment	Ratio (%)	Arrange-ment	Ratio (%)	Arrange-ment	Ratio (%)	
~~1~~ Upper Part of Tendon Gallery[1]	224 (18'-8")	Top	2-#18@1°	0.224	3-#14@12"	0.251	2-#11/2°@ 12"	0.813	Abnormal/ Extreme[7]
		Bottom	2-#14@1°	0.126	2-#14@12"	0.167			
~~2~~ Lower Part of Tendon Gallery[2]	124 (10'-4")	Top	2-#14@1°	0.228	2-#14@12"	0.303	2-#11/2°@ 24"	0.406	Abnormal/ Extreme[7]
		Bottom	3-#14@12"	0.454	3-#14@12"	0.454			Test[7]
~~3~~ Lower Part of Cavity[3]	139 (11'-7")	Top	2-#14@12"	0.270	2-#14@12"	0.270	#10@24"× 24"	0.220	Test[7]
		Bottom	3-#14@12"	0.405	3-#14@12"	0.405			Abnormal/ Extreme[7]
~~4~~ Inside Secondary Shield Wall of PCCV mat[4]	312 (26'-0")	Top	2-#14@12"	0.120	2-#14@12"	0.120	#10@24"× 24"	0.220	Abnormal/ Extreme[7]
		Bottom	3-#14@12"	0.180	3-#14@12"	0.180			
~~5~~ Outside Secondary Shield Wall of PCCV mat[5]	478 (39'-10")	Top	2-#18@1°	0.101	3-#14@12"	0.118	#10@12"× 24"	0.441	Abnormal/ Extreme[7]
		Bottom	3-#14@12" +1-#14@12"	0.157	3-#14@12" +1-#14@12	0.157			Abnormal 1.5Pa[7]
~~5a~~Outside Secondary Shield Wall of PCCV mat[5a]	458 (38'-2")	Top	2-#18@1°	0.106	3-#14@12"	0.123	#10@24"× 24"	0.220	Abnormal/ Extreme[7]
		Bottom	3-#14@12" +1-#14@12"	0.164	3-#14@12" +1-#14@12"	0.164			Test[7]
~~6~~Other than Containment Basemat[6]	119 (9'-11")	Top	2-#14@12"	0.315	2-#14@12"	0.315	#9@36"× 36"	0.077	Load Case 6[7]
		Bottom	2-#14@12"	0.315	2-#14@12"	0.315			
~~6a~~Other than Containment Basemat[6a]	119 (9'-11")	Top	2-#14@12"	0.315	2-#14@12"	0.315	#10@12"× 12"	0.882	Load Case 4[7]
		Bottom	2-#14@12"	0.315	2-#14@12"	0.315			
~~6b~~Other than Containment Basemat[6b]	119 (9'-11")	Top	2-#14@12"	0.315	2-#14@12"	0.315	#10@24"× 24"	0.220	Load Case 4[7]
		Bottom	2-#14@12"	0.315	2-#14@12"	0.315			

Table 3.8.5-4 Sectional Thickness and Reinforcement Ratios of Basemat Used in the R/B, PCCV, Containment Internal Structure Evaluation (Sheet 2 of 2)

Note :	1 Upper Part of Tendon Gallery	Direction 1: Radial, Direction 2: Circumferential
	2 Lower Part of Tendon Gallery	Direction 1: Top: Radial, Bottom: N-S + Circumferential Direction 2: Top: Circumferential, Bottom: E-W + Circumferential
	3 Lower Part of Cavity	Direction 1: N-S, Direction 2: E-W
	4 Inside Secondary Shield Wall	Direction 1: N-S, Direction 2: E-W
	5,5a Outside Secondary Shield Wall	Direction 1: Top: Radial, Bottom: N-S + Circumferential Direction 2: Top: Circumferential, Bottom: E-W + Circumferential
	6 Other than PCCV Basemat	Direction 1: N-S, Direction 2: E-W

7 For the controlling load cases of locations 1 through 5a, see DCD Table 3.8.1-2. For controlling load cases of locations 6 through 6b, see DCD Table 3.8.4-3.

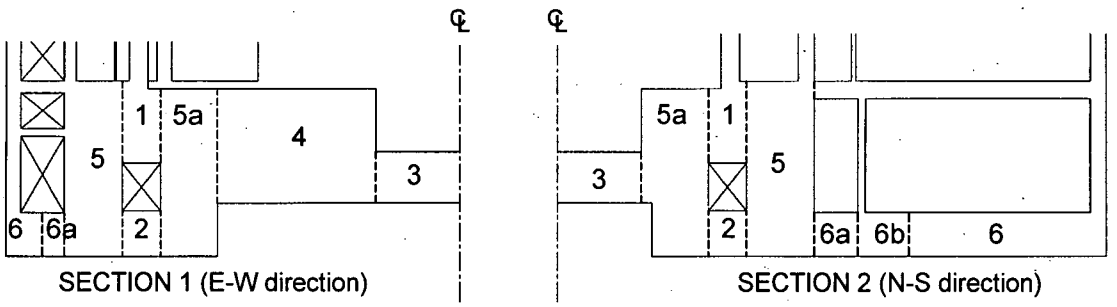

Reinforcement Group

Table 3.8.5-5 Typical Reinforcement in PS/B Basemat

	Provided Reinforcement		
	NS-Dir.	EW-Dir.	Shear
Concrete Thickness 100 in..			
Control Load Combination Case	None (Minimum Requirement)	None (Minimum Requirement)	-
Top	#11@12"+#11@12"	#11@12"+#11@12"	-
Bottom	#11@12"+#11@12"	#11@12"+#11@12"	-

Note: ( ) shows the reinforcement ratio.

Table 1.8-2 Compilation of All Combined License Applicant Items for Chapters 1-19 (sheet 13 of 44)

COL ITEM NO.	COL ITEM
COL 3.8(19)	*The design and analysis of the ESWPT, UHSRS, PSFSVs, and other site-specific structures are to be provided by the COL Applicant based on site-specific seismic criteria.*
COL 3.8(20)	*The COL Applicant is to identify any applicable externally generated loads. Such site-specific loads include those induced by floods, potential non-terrorism related aircraft crashes, explosive hazards in proximity to the site, and projectiles and missiles generated from activities of nearby military installations.*
COL 3.8(21)	*Deleted*
COL 3.8(22)	*The COL Applicant is to address monitoring of seismic category I structures in accordance with the requirements of NUMARC 93-01 (Reference 3.8-28) and 10 CFR 50.65 (Reference 3.8-29) as detailed in RG 1.160 (Reference 3.8-30).*
COL 3.8(23)	*The COL Applicant is to determine if the site-specific zone of maximum frost penetration extends below the depth of the basemats for the standard plant, and to pour ~~loan~~ fill concrete under any basemat above the frost line so that the bottom of ~~loan~~ fill concrete is below the maximum frost penetration level.*
COL 3.8(24)	*Other non-standard seismic category I buildings and structures of the US-APWR are designed by the COL Applicant based on site-specific subgrade conditions.*
COL 3.8(25)	*The site-specific COL are to assure the design criteria listed in Chapter 2, Table 2.0-1, is met or exceeded.*
COL 3.8(26)	*Subsidence and differential displacement may therefore be reduced to less than 2 in. if justified by the COL Applicant based on site specific soil properties.*
COL 3.8(27)	*The COL Applicant is to specify normal operating thermal loads for site-specific structures, as applicable.*
COL 3.8(28)	*The COL Applicant is to specify concrete strength utilized in non-standard plant seismic category I structures.*
COL 3.8(29)	*The COL Applicant is to provide design and analysis procedures for the ESWPT, UHSRS, and PSFSVs.*