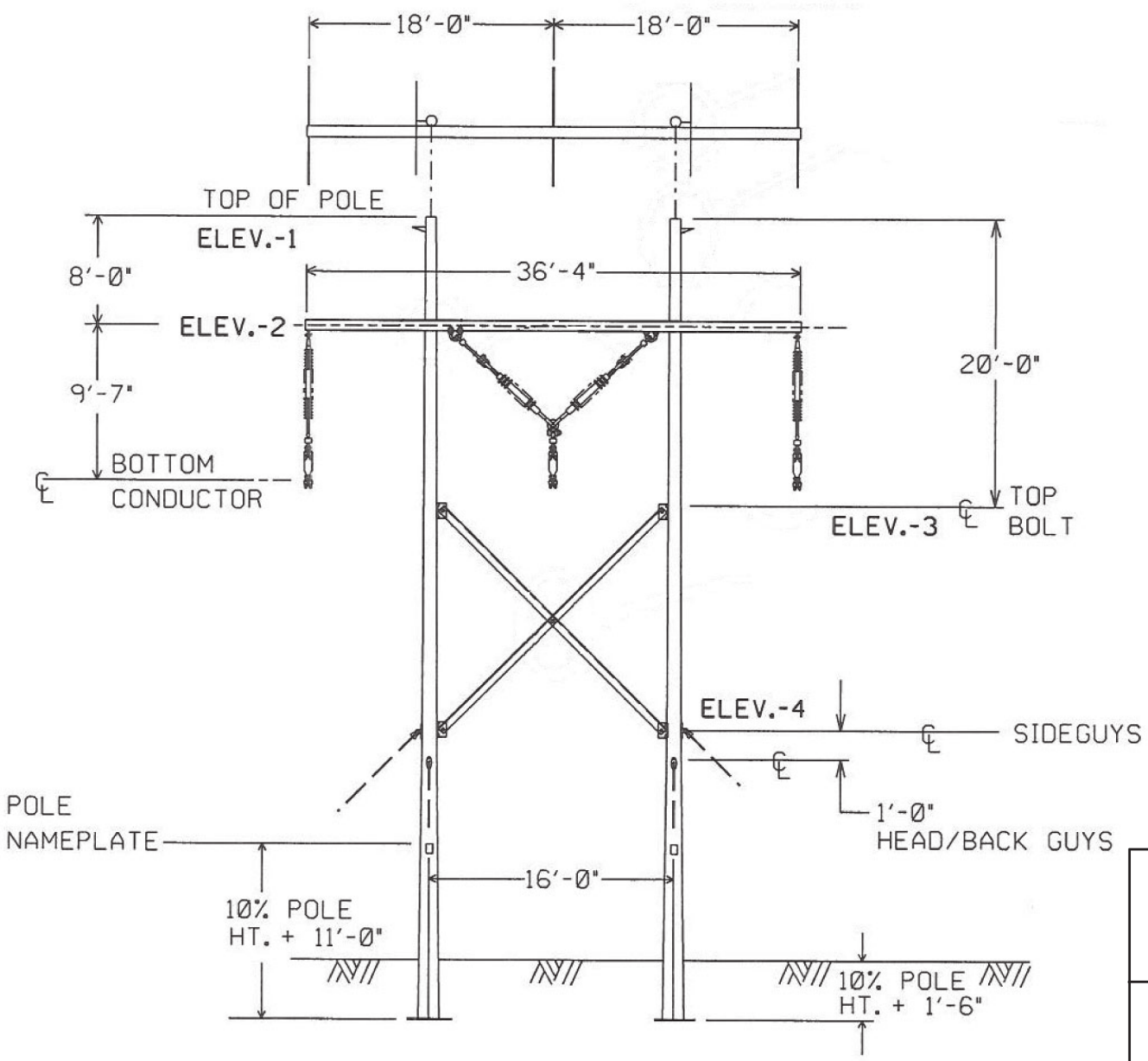

NOTE

Use head & back guys and side guys only when specified on the plan profile.

Progress Energy Carolinas

Shearon Harris Nuclear Power Plant
Units 2 and 3
Part 3, Environmental Report

New Hill, North Carolina

Typical Design of a Pole H-Frame Support Structure for Transmission Lines

FIGURE 3.7-4

Rev 0