PRELIMINARY

GE Hitachi Nuclear Energy

26A6642BJ
Revision 6
June 2009

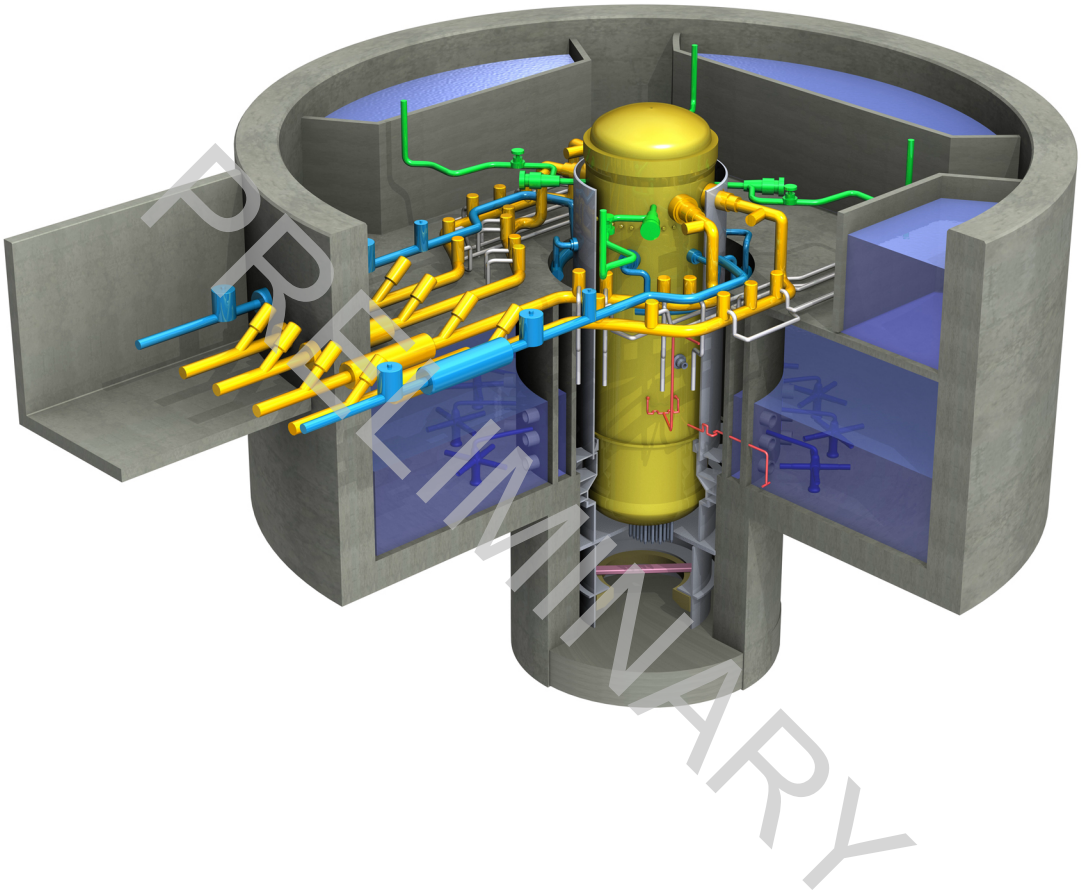

PRELIMINARY

ESBWR Design Control Document
Tier 2

Chapter 12
Radiation Protection

Contents

12. Radiation Protection 12.1-1
12.1 Ensuring That Occupational Radiation Exposures Are ALARA 12.1-1
12.1.1 Policy Considerations 12.1-1
12.1.1.1 Design and Construction Policies 12.1-1
12.1.1.2 Operational Policies 12.1-1
12.1.1.3 Compliance with 10 CFR 20 and Regulatory Guides 8.8, 8.10 and 1.8 ..... 12.1-1
12.1.1.3.1 Compliance with Regulatory Guide 8.8 ..... 12.1-1
12.1.1.3.2 Compliance with Regulatory Guide 8.10 ..... 12.1-1
12.1.1.3.3 Compliance with Regulatory Guide 1.8 ..... 12.1-1
12.1.2 Design Considerations 12.1-2
12.1.2.1 General Design Consideration for ALARA Exposures 12.1-2
12.1.2.2 Equipment Design Considerations for ALARA Exposures 12.1-2
12.1.2.2.1 General Design Criteria 12.1-2
12.1.2.2.2 Equipment Design Considerations to Limit Time Spent in Radiation Areas 12.1-3
12.1.2.2.3 Equipment Design Considerations to Limit Component Radiation Levels 12.1-3
12.1.2.3 Facility Layout General Design Considerations for Maintaining Radiation Exposures ALARA 12.1-3
12.1.2.3.1 Minimizing Personnel Time Spent in Radiation Areas 12.1-3
12.1.2.3.2 Minimizing Radiation Levels in Plant Access Areas and Vicinity of Equipment 12.1-4
12.1.3 Operational Considerations 12.1-5
12.1.4 COL Information 12.1-5
12.1.5 References 12.1-5
12.2 Plant Sources 12.2-1
12.2.1 Contained Sources 12.2-1
12.2.1.1 Primary Containment Source Terms 12.2-1
12.2.1.1.1 Reactor Vessel Core Sources 12.2-1
12.2.1.1.2 Other Radioactive Sources 12.2-2
12.2.1.2 Reactor Building and Fuel Building Source Terms 12.2-3
12.2.1.2.1 Other Sources 12.2-3
12.2.1.3 Turbine Building Source Terms 12.2-4
12.2.1.4 Radwaste Building Source Terms 12.2-5
12.2.1.5 Other Contained Sources 12.2-6
12.2.2 Airborne and Liquid Sources for Environmental Consideration 12.2-6
12.2.2.1 Airborne Releases Offsite 12.2-6
12.2.2.2 Airborne Dose Evaluation Offsite 12.2-7
12.2.2.3 Liquid Releases Offsite 12.2-7
12.2.2.4 Liquid Doses Offsite 12.2-7
12.2.3 Airborne Sources Onsite 12.2-8
12.2.3.1 Calculation of Airborne Radionuclides 12.2-8
12.2.3.2 Reactor Building 12.2-8

PRELIMINARY

12.2.3.2.1 Airborne Sources During Normal Operation 12.2-8
12.2.3.2.2 Airborne Sources During Refueling 12.2-9
12.2.3.3 Fuel Building 12.2-9
12.2.3.4 Turbine Building 12.2-10
12.2.3.5 Radwaste Building 12.2-10
12.2.4 COL Information 12.2-11
12.2.5 References 12.2-11
12.3 Radiation Protection 12.3-1
12.3.1 Facility Design Features 12.3-1
12.3.1.1 Equipment Design for Maintaining Exposure ALARA 12.3-1
12.3.1.1.1 Pumps 12.3-2
12.3.1.1.2 Instrumentation 12.3-2
12.3.1.1.3 Heat Exchangers 12.3-2
12.3.1.1.4 Valves 12.3-3
12.3.1.1.5 Piping 12.3-3
12.3.1.1.6 Lighting 12.3-3
12.3.1.1.7 Floor Drains 12.3-3
12.3.1.1.8 Ventilation 12.3-4
12.3.1.2 Plant Design for Maintaining Exposure ALARA 12.3-4
12.3.1.2.1 Penetrations 12.3-4
12.3.1.2.2 Sample Stations 12.3-5
12.3.1.2.3 HVAC Systems 12.3-5
12.3.1.2.4 Piping 12.3-5
12.3.1.2.5 Equipment Layout 12.3-6
12.3.1.2.6 Contamination Control 12.3-6
12.3.1.3 Radiation Zoning 12.3-7
12.3.1.4 Implementation of ALARA 12.3-9
12.3.1.4.1 Reactor Water Cleanup / Shutdown Cooling System 12.3-9
12.3.1.4.2 Fuel and Auxiliary Pools Cooling System 12.3-9
12.3.1.4.3 Main Steam System 12.3-10
12.3.1.4.4 Inclined Fuel Transfer System (IFTS) 12.3-10
12.3.1.4.5 Radwaste Building 12.3-11
12.3.1.5 Minimization of Contamination and Radioactive Waste Generation 12.3-12
12.3.1.5.1 Design Considerations 12.3-12
12.3.1.5.2 Operational/Programmatic Considerations 12.3-15
12.3.2 Shielding 12.3-15
12.3.2.1 General Design Guides 12.3-15
12.3.2.2 Design Description 12.3-16
12.3.2.2.1 General Design Guides 12.3-16
12.3.2.2.2 Method of Shielding Design 12.3-17
12.3.2.2.3 Plant Shielding Description 12.3-18
12.3.3 Ventilation 12.3-19
12.3.3.1 Design Objectives 12.3-20
12.3.3.2 Design Description 12.3-20
12.3.3.2.1 Control Room Ventilation 12.3-20
12.3.3.2.2 Containment 12.3-20

PRELIMINARY

12.3.3.2.3 Reactor Building 12.3-21
12.3.3.2.4 Radwaste Building 12.3-21
12.3.3.2.5 Fuel Building 12.3-21
12.3.3.3 Accident Conditions 12.3-22
12.3.4 Area Radiation and Airborne Radioactivity Monitoring Instrumentation 12.3-22
12.3.4.1 ARM System Description 12.3-24
12.3.4.2 ARM Detector Location and Sensitivity 12.3-24
12.3.4.3 Pertinent Design Parameters and Requirements 12.3-24
12.3.5 Post-Accident Access Requirements 12.3-25
12.3.6 Post-Accident Radiation Zone Maps and Mission Doses 12.3-26
12.3.7 COL Information 12.3-26
12.3.8 References 12.3-27
12.4 Dose Assessment 12.4-1
12.4.1 Reactor Operations and Surveillance 12.4-2
12.4.2 Routine Maintenance 12.4-3
12.4.3 Waste Processing 12.4-4
12.4.4 Refueling Operations 12.4-5
12.4.5 Inservice Inspection 12.4-6
12.4.6 Special Maintenance 12.4-7
12.4.7 Overall Plant Doses 12.4-11
12.4.8 COL Information 12.4-11
12.4.9 References 12.4-11
12.5 Operational Radiation Protection Program 12.5-20
12.5.1 Objectives 12.5-20
12.5.2 Equipment, Instrumentation, and Facilities 12.5-20
12.5.3 Operational Considerations 12.5-20
12.5.4 COL Information 12.5-20
12.5.5 References 12.5-21
12.6 Deleted 12.6-1
12A.1 Evaluation Parameters 12A-1
12A.2 Example Calculation 12A-3
12A.3 COL Information 12A-3
12A.4 References 12A-3
12B.1 Reactor Building Releases 12B-1
12B.2 Turbine Building Releases 12B-1
12B.3 Radwaste Building Releases 12B-2
12B.4 Mechanical Vacuum Pump Releases 12B-2
12B.5 Turbine Seal Releases 12B-2
12B.6 Offgas System Releases 12B-2
12B.7 Drywell Releases 12B-3

PRELIMINARY

List of Tables

Table 12.2-1 Basic Reactor Data 12.2-13
Table 12.2-2 Neutron Fluxes at Core Boundary and RPV 12.2-22
Table 12.2-3 Gamma Ray Source Energy Spectra 12.2-24
Table 12.2-4 Neutron and Gamma Ray Fluxes Outside the Vessel Wall 12.2-26
Table 12.2-5 Radioactive Sources in the Control Rod Drive System 12.2-27
Table 12.2-6a RWCU/SDC Regenerative Heat Exchanger Tube Side Activity 12.2-28
Table 12.2-6b RWCU/SDC Non-Regenerative Heat Exchanger Tube Side Activity 12.2-29
Table 12.2-6c RWCU/SDC Regenerative Heat Exchanger Shell Side 12.2-30
Table 12.2-7 RWCU Demineralizer Activity 12.2-31
Table 12.2-8 FAPCS Filter Activity 12.2-32
Table 12.2-8a FAPCS Demineralizer Activity 12.2-33
Table 12.2-8b FAPCS Heat Exchanger Tube Side Activity 12.2-34
Table 12.2-9 FAPCS Backwash Receiving Tank Activity 12.2-35
Table 12.2-10a Offgas System Steam Jet Air Ejector Inventory 12.2-36
Table 12.2-10b Offgas System Isotopic Inventory for Preheater through Charcoal Tanks. 12.2-39
Table 12.2-11 Turbine Condenser Inventory 12.2-43
Table 12.2-12 Isotopic Inventory in the Ion Exchanger Filters 12.2-44
Table 12.2-13a Liquid Waste Management System Equipment Drain Collection Tank Activity 12.2-45
Table 12.2-13b Liquid Waste Management System Equipment Drain Sample Tank Activity 12.2-46
Table 12.2-13c Liquid Waste Management System Floor Drain Collection Tank Activity 12.2-47
Table 12.2-13d Liquid Waste Management System Floor Drain Sample Tank Activity 12.2-48
Table 12.2-13e Liquid Waste Management System Chemical Collection Tank Activity ... 12.2-49
Table 12.2-13f Liquid Waste Management System Detergent Collection Tank Activity ... 12.2-50
Table 12.2-13g Liquid Waste Management System Detergent Sample Tank Activity 12.2-51
Table 12.2-14a Solid Waste Management System High Activity Resin Holdup Tank Activity 12.2-52
Table 12.2-14b Solid Waste Management System Low Activity Resin Holdup Tank Activity 12.2-53
Table 12.2-14c Solid Waste Management System Phase Separator Tank Activity 12.2-54
Table 12.2-14d Solid Waste Management System Condensate Resin Holdup Tank Activity 12.2-55
Table 12.2-14e Solid Waste Management System Concentrate Waste Tank Activity 12.2-56
Table 12.2-15 Airborne Sources Calculation 12.2-57
Table 12.2-16 Annual Airborne Releases for Offsite Dose Evaluations (MBq)** 12.2-58
Table 12.2-17 Comparison of Airborne Concentrations with 10 CFR 20 Concentrations .. 12.2-61
Table 12.2-18a Airborne Offsite Dose Calculation Bases 12.2-64
Table 12.2-18b ESBWR Annual Average Doses from Airborne Releases 12.2-65
Table 12.2-19a Average Annual Liquid Release Calculation Parameters** 12.2-67
Table 12.2-19b Average Annual Liquid Releases 12.2-69
Table 12.2-20a Liquid Pathway Offsite Dose Calculation Bases** 12.2-71
Table 12.2-20b Liquid Pathway Dose Results in mSv/year 12.2-72
Table 12.2-21 N-16 Skyshine Annual Dose 12.2-73

PRELIMINARY

Table 12.2-22 Radiation Sources Parameters 12.2-74
Table 12.2-23a Parameters and Assumptions Used for Calculating Inside the Building Airborne Radioactivity Concentrations 12.2-76
Table 12.2-23b Reactor Building Outside Containment Airborne Radioactivity Concentrations During Normal Operation 12.2-77
Table 12.2-23c Spent Fuel Pool and Equipment Areas Airborne Radioactivity Concentrations 12.2-79
Table 12.2-23d Turbine Building Airborne Radioactivity Concentrations 12.2-81
Table 12.2-23e Radwaste Building Airborne Radioactivity Concentrations 12.2-84
Table 12.3-1 Computer Programs Used in Shielding Design Calculations 12.3-29
Table 12.3-2 Area Radiation Monitors for Reactor Building 12.3-30
Table 12.3-3 Area Radiation Monitors for Fuel Building 12.3-31
Table 12.3-4 Area Radiation Monitors for Radwaste Building 12.3-32
Table 12.3-5 Area Radiation Monitors for Turbine Building 12.3-33
Table 12.3-6 Area Radiation Monitors for Control Building 12.3-35
Table 12.3-7 Area Radiation Channel Monitoring Range 12.3-36
Table 12.3-8 Shielding Geometry (Nominal) 12.3-37
Table 12.3-9 Activity Accumulated in the HVAC Filters in Accident Conditions 12.3-41
Table 12.3-10a Dose Rates in the Control Building EFU and Adjacent Rooms in Accident Conditions 12.3-43
Table 12.3-10b Dose Rates in the Reactor Building HVAC Filter and Adjacent Rooms in Accident Conditions 12.3-44
Table 12.3-11 Beyond 72 Hour And Long Term Post Accident Recovery Actions Access Requirements 12.3-45
Table 12.3-12 Radiation Dose Rates At The Post-Accident Access Rooms 12.3-46
Table 12.3-13 Radiation Dose Rates At The Access Ways To Post-Accident Access Areas .. 12.3-47
Table 12.3-14 Reactor Building Post Accident Access Area 12.3-49
Table 12.3-15 Control Building Post Accident Access Area 12.3-53
Table 12.3-16 Electrical And Service Building Post Accident Access Area 12.3-54
Table 12.3-17 Outside Area - Post-Accident Radiation Mission Dose At 72 H 12.3-56
Table 12.3-18 Regulatory Guide 4.21 Design Objective and Applicable DCD Subsection Information 12.3-57
Table 12.4-1 Projected ESBWR Total Occupational Radiation Exposure Estimates Based on 24 Month Refueling Cycle 12.4-13
Table 12.4-2 Occupational Dose Estimates During Operation and Surveillances 12.4-14
Table 12.4-3 Occupational Dose Estimates During Routine Maintenance 12.4-15
Table 12.4-4 Occupational Dose Estimates During Waste Processing 12.4-16
Table 12.4-5 Occupational Dose Estimates During Refueling Operations 12.4-17
Table 12.4-6 Occupational Dose Estimates During Inservice Inspection 12.4-18
Table 12.4-7 Occupational Dose Estimates During Special Maintenance 12.4-19

PRELIMINARY

List of Illustrations

Figure 12.2-1. Radiation Source Model 12.2-86
Figure 12.3-1. Nuclear Island Radiation Zones for Full Power and Shutdown Operation - Elevation -11500 mm 12.3-118
Figure 12.3-2. Nuclear Island Radiation Zones for Full Power and Shutdown Operation - Elevation -6400 mm 12.3-119
Figure 12.3-3. Nuclear Island Radiation Zones for Full Power and Shutdown Operation - Elevation -1000 mm 12.3-120
Figure 12.3-4. Nuclear Island Radiation Zones for Full Power and Shutdown Operation – Elevation 4650 mm 12.3-121
Figure 12.3-5. Nuclear Island Radiation Zones for Full Power and Shutdown Operation - Elevation 9060 mm 12.3-122
Figure 12.3-6. Nuclear Island Radiation Zones for Full Power and Shutdown Operation - Elevation 13570 mm 12.3-123
Figure 12.3-7. Nuclear Island Radiation Zones for Full Power and Shutdown Operation - Elevation 17500 mm 12.3-124
Figure 12.3-8. Nuclear Island Radiation Zones for Full Power and Shutdown Operation - Elevation 27000 mm 12.3-125
Figure 12.3-9. Nuclear Island Radiation Zones for Full Power and Shutdown Operation - Elevation 34000 mm 12.3-126
Figure 12.3-10. Nuclear Island Radiation Zones for Full Power and Shutdown Operation Section A-A 12.3-127
Figure 12.3-11. Nuclear Island Radiation Zones for Full Power and Shutdown Operation Section B-B 12.3-128
Figure 12.3-12. Turbine Building Radiation Zones - Elevation -1400 mm 12.3-129
Figure 12.3-13. Turbine Building Radiation Zones - Elevation 4650 mm 12.3-130
Figure 12.3-14. Turbine Building Radiation Zones - Elevation 12000 mm 12.3-131
Figure 12.3-15. Turbine Building Radiation Zones - Elevation 20000 mm 12.3-132
Figure 12.3-16. Turbine Building Radiation Zones - Elevation 28000 mm 12.3-133
Figure 12.3-17. Turbine Building Radiation Zones - Elevation 35000 mm 12.3-134
Figure 12.3-18. Turbine Building Radiation Zones at Roof Elevation Various 12.3-135
Figure 12.3-19. Radwaste Building Radiation Zones - Elevation -9350 mm 12.3-136
Figure 12.3-20. Radwaste Building Radiation Zones - Elevation -2350 mm 12.3-137
Figure 12.3-21. Radwaste Building Radiation Zones - Elevation 4650 mm 12.3-138
Figure 12.3-22. Radwaste Building Radiation Zones - Elevation 10650 mm 12.3-139
Figure 12.3-22a. Radiation Zones in the Access Tunnel to the Electrical Building – Elevation - 2000 mm 12.3-140
Figure 12.3-22b. Radiation Zones in the Access Tunnel to the Electrical Building and Radwaste Building – Elevation 1300 mm 12.3-141
Figure 12.3-23. Nuclear Island Area Radiation Monitors - Elevation -11500 mm 12.3-142
Figure 12.3-24. Nuclear Island Area Radiation Monitors - Elevation -6400 mm 12.3-143
Figure 12.3-25. Nuclear Island Area Radiation Monitors - Elevation -1000 mm 12.3-144
Figure 12.3-26. Nuclear Island Area Radiation Monitors - Elevation 4650 mm 12.3-145
Figure 12.3-27. Nuclear Island Area Radiation Monitors - Elevation 9060 mm 12.3-146
Figure 12.3-28. Nuclear Island Area Radiation Monitors - Elevation 13570 mm 12.3-147

PRELIMINARY

Figure 12.3-29. Nuclear Island Area Radiation Monitors - Elevation 17500 mm 12.3-148
Figure 12.3-30. Nuclear Island Area Radiation Monitors - Elevation 27000 mm 12.3-149
Figure 12.3-31. Nuclear Island Area Radiation Monitors - Elevation 34000 mm 12.3-150
Figure 12.3-32. Turbine Building Area Radiation Monitors - Elevation -1400 mm..... 12.3-151
Figure 12.3-33. Turbine Building Area Radiation Monitors - Elevation 4650 mm 12.3-152
Figure 12.3-34. Turbine Building Area Radiation Monitors - Elevation 12000 mm 12.3-153
Figure 12.3-35. Turbine Building Area Radiation Monitors - Elevation 20000 mm 12.3-154
Figure 12.3-36. Turbine Building Area Radiation Monitors - Elevation 28000 mm 12.3-155
Figure 12.3-37. Turbine Building Area Radiation Monitors - Elevation 35000 mm 12.3-156
Figure 12.3-38. Turbine Building Area Radiation Monitors at Various Elevations..... 12.3-157
Figure 12.3-39. Radwaste Building Area Radiation Monitors - Elevation -9350 mm..... 12.3-158
Figure 12.3-40. Radwaste Building Area Radiation Monitors - Elevation -2350 mm..... 12.3-159
Figure 12.3-41. Radwaste Building Area Radiation Monitors - Elevation 4650 mm 12.3-160
Figure 12.3-42. Radwaste Building Area Radiation Monitors - Elevation 10650 mm 12.3-161
Figure 12.3-43. Nuclear Island Post Accident Radiation Zones - Elevation -11500 mm . 12.3-162
Figure 12.3-44. Nuclear Island Post Accident Radiation Zones - Elevation -6400 mm ... 12.3-163
Figure 12.3-45. Nuclear Island Post Accident Radiation Zones - Elevation -1000 mm ... 12.3-164
Figure 12.3-46. Nuclear Island Post Accident Radiation Zones - Elevation 4650 mm..... 12.3-165
Figure 12.3-47. Nuclear Island Post Accident Radiation Zones - Elevation 9060 mm..... 12.3-166
Figure 12.3-48. Nuclear Island Post Accident Radiation Zones - Elevation 13570 mm... 12.3-167
Figure 12.3-49. Nuclear Island Post Accident Radiation Zones - Elevation 17500 mm... 12.3-168
Figure 12.3-50. Nuclear Island Post Accident Radiation Zones - Elevation 27000 mm... 12.3-169
Figure 12.3-51. Nuclear Island Post Accident Radiation Zones - Elevation 34000 mm... 12.3-170
Figure 12.3-51a. Post Accident Radiation Zones Electrical Building - Elevation 4650 mm .. 12.3-171
Figure 12.3-51b. Post Accident Radiation Zones Electrical Building - Elevation 9800 mm .. 12.3-172
Figure 12.3-51c. Post Accident Radiation Zones Electrical Building - Elevation 18000 mm 12.3-173
Figure 12.3-51d. Post Accident Radiation Zones Electrical Building - Elevation 27000 mm 12.3-174
Figure 12.3-51e. Post Accident Radiation Zones, Service Building Floor - Elevation 1300 mm 12.3-175
Figure 12.3-51f. Post Accident Radiation Zones, Service Building Floor - Elevation 4650 mm 12.3-176
Figure 12.3-52. Reactor, Fuel, & Control Buildings Personnel Egress Routes - Elevation – 11500 mm 12.3-177
Figure 12.3-53. Reactor, Fuel, & Control Buildings Personnel Egress Routes - Elevation -6400 mm 12.3-178
Figure 12.3-54. Reactor, Fuel, & Control Buildings Personnel Egress Routes - Elevation – 1000 mm 12.3-179
Figure 12.3-55. Reactor, Fuel, & Control Buildings Personnel Egress Routes - Elevation 4650 mm 12.3-180
Figure 12.3-56. Reactor, Fuel, & Control Buildings Personnel Egress Routes - Elevation 9060 mm 12.3-181

PRELIMINARY

Figure 12.3-57. Reactor, Fuel, & Control Buildings Personnel Egress Routes - Elevation 13570 mm 12.3-182
Figure 12.3-58. Reactor, Fuel, & Control Buildings Personnel Egress Routes - Elevation 17500 mm 12.3-183
Figure 12.3-59. Reactor, Fuel, & Control Buildings Personnel Egress Routes - Elevation 27000 mm 12.3-184
Figure 12.3-60. Reactor, Fuel, & Control Buildings Personnel Egress Routes - Elevation 34000 mm 12.3-185
Figure 12.3-61. Radwaste Building Personnel Egress Routes - Elevation -9350 mm 12.3-186
Figure 12.3-62. Radwaste Building Personnel Egress Routes - Elevation -2350 mm 12.3-187
Figure 12.3-63. Radwaste Building Personnel Egress Routes - Elevation 4650 mm 12.3-188
Figure 12.3-64. Radwaste Building Personnel Egress Routes - Elevation 10650 mm 12.3-189
Figure 12.3-65. Turbine Building Personnel Egress Routes - Elevation -1400 mm 12.3-190
Figure 12.3-66. Turbine Building Personnel Egress Routes - Elevation 4650 mm 12.3-191
Figure 12.3-67. Turbine Building Personnel Egress Routes - Elevation 12000 mm 12.3-192
Figure 12.3-68. Turbine Building Personnel Egress Routes - Elevation 20000 mm 12.3-193
Figure 12.3-69. Turbine Building Personnel Egress Routes - Elevation 28000 mm 12.3-194
Figure 12.3-70. Turbine Building Personnel Egress Routes - Elevation 35000 mm 12.3-195
Figure 12.3-70a. Turbine Building Personnel Egress Routes at Various Elevations 12.3-196
Figure 12.3-71. Reactor Building Rooms Adjacent to the RWCU/SDC and FAPCS Demineralizers - Elevation -11500 mm 12.3-197
Figure 12.3-72. Reactor Building RWCU/SDC and FAPCS Demineralizer Rooms and Adjacent Rooms - Elevation -6400 mm 12.3-198
Figure 12.3-73. Reactor Building Rooms Adjacent to the RWCU/SDC and FAPCS Demineralizers - Elevation -1000 mm 12.3-199
Figure 12.3-74. Areas Requiring Post-Accident Access - Elevation -11500 mm 12.3-200
Figure 12.3-75. Areas Requiring Post-Accident Access - Elevation -6400 mm 12.3-201
Figure 12.3-76. Areas Requiring Post-Accident Access - Elevation from -2000 to -1000 mm 12.3-202
Figure 12.3-77. Areas Requiring Post-Accident Access - Elevation 1300 mm 12.3-203
Figure 12.3-78. Areas Requiring Post-Accident Access - Elevation 4650 mm 12.3-204
Figure 12.3-79. Areas Requiring Post-Accident Access - Elevation 9060 mm 12.3-205
Figure 12.3-80. Areas Requiring Post-Accident Access - Elevation 9800 mm 12.3-206
Figure 12.3-81. Areas Requiring Post-Accident Access - Elevation 13570 mm 12.3-207
Figure 12.3-82. Areas Requiring Post-Accident Access - Elevation 17500 mm 12.3-208
Figure 12.3-83. Areas Requiring Post-Accident Access - Elevation 18000 mm 12.3-209
Figure 12.3-84. Areas Requiring Post-Accident Access - Elevation 27000 mm 12.3-210
Figure 12.3-85. Areas Requiring Post-Accident Access (Electrical Building) - Elevation 27000 mm 12.3-211
Figure 12.3-86. Areas Requiring Post-Accident Access - Elevation 34000 mm 12.3-212
Figure 12.5-1. Functional Layout of Health Physics Facilities at Service Building - Elevation 1300 mm 12.5-22
Figure 12.5-2. Functional Layout of Health Physics Facilities at Service Building - Elevation 4650 mm 12.5-23

PRELIMINARY

12. RADIATION PROTECTION

12.1 ENSURING THAT OCCUPATIONAL RADIATION EXPOSURES ARE ALARA

12.1.1 Policy Considerations

Administrative programs and procedures, in conjunction with facility design, ensure that the occupational radiation exposure to personnel is kept as low as reasonably achievable (ALARA).

12.1.1.1 Design and Construction Policies

The ALARA (Reference 12.1-1) philosophy is applied during the initial design of the plant and implemented via internal design reviews. The design is reviewed in detail for ALARA considerations and is reviewed, updated and modified as necessary during the design phase as experience is gained from operating plants. Engineers review the plant design and integrate the layout, shielding, ventilation and monitoring instrument designs with traffic control, security, access control, and health physics aspects to ensure the overall design is conducive to maintaining exposures ALARA.

All pipe routing containing radioactive fluids is reviewed as part of the engineering design effort. This ensures that lines expected to contain significant radiation sources are adequately shielded and properly routed to minimize exposure to personnel.

Operating plant results are continuously integrated during the design phase of the ESBWR Standard Plant.

12.1.1.2 Operational Policies

See Subsection 12.1.3.

12.1.1.3 Compliance with 10 CFR 20 and Regulatory Guides 8.8, 8.10 and 1.8

The ESBWR plant design complies with Title 10 of the Code of Federal Regulations, Part 20 (10 CFR 20), and Regulatory Guides 8.8 (Reference 12.1-2), 8.10 (Reference 12.1-3), and 1.8 (Reference 12.1-4).

12.1.1.3.1 Compliance with Regulatory Guide 8.8

The policy considerations regarding plant operations contained in Regulatory Guide 8.8 will be demonstrated by COL applicant compliance with Regulatory Guide 8.8 (COL 12.1-4-A).

The ESBWR design meets the guidelines of Regulatory Guide 8.8, Sections C.2 and C.4, which address facility, equipment and instrumentation design features. Features of the plant that are examples of compliance with Regulatory Guide 8.8 are delineated in Section 12.3.

12.1.1.3.2 Compliance with Regulatory Guide 8.10

The COL Applicant will demonstrate compliance with Regulatory Guide 8.10 (COL 12.1-1-A).

12.1.1.3.3 Compliance with Regulatory Guide 1.8

The COL Applicant will demonstrate compliance with Regulatory Guide 1.8 (COL 12.1-2-A).

PRELIMINARY

12.1.2 Design Considerations

This subsection discusses the methods and features by which the policy considerations of Subsection 12.1.1 are applied. Provisions and designs for maintaining personnel exposures ALARA are presented in detail in Subsections 12.3.1 and 12.3.2.

12.1.2.1 General Design Consideration for ALARA Exposures

General design considerations and methods employed to maintain in-plant radiation exposures ALARA, consistent with the recommendations of Regulatory Guide 8.8, have two objectives:

- Minimizing the necessity for and amount of personnel time spent in radiation areas, and
- Minimizing radiation levels in routinely occupied plant areas in the vicinity of plant equipment expected to require personnel attention.

Both equipment and facility designs are considered in maintaining exposures ALARA during plant operations. Events considered include normal operation maintenance and repairs, refueling operations and fuel storage, in-service inspection and calibrations, radioactive waste handling and disposal, etc.

Descriptions and examples of general design features to maintain doses ALARA during normal power and shutdown operations are provided in Subsection 12.3.1.

The features of the plant design that ensure the plant can be operated and maintained with ALARA exposures also serve to assist in achieving ALARA exposures during the decommissioning process.

Examples of features that assist in maintaining low occupational exposures during decommissioning include the following:

- Provisions for draining, flushing, and decontaminating equipment and piping.
- Design of equipment to minimize the buildup of radioactive material and to facilitate flushing of crud traps.
- Shielding that provides protection during maintenance or repairs and during decommissioning operations.
- Provision for adequate space for utilization of movable shielding.
- Separation of more highly radioactive equipment from less radioactive equipment and provision of separate shielded compartments for adjacent items of radioactive equipment.
- Provision for access hatches for the installation or removal of plant components.
- Provision for the Reactor Water Cleanup/Shutdown Cooling (RWCU/SDC) System and the condensate demineralizer to minimize crud buildup.

12.1.2.2 Equipment Design Considerations for ALARA Exposures

12.1.2.2.1 General Design Criteria

The engineering design procedures require that the component design engineer consider the applicable Regulatory Guides (including Regulatory Guide 8.8) as a part of the ALARA design

PRELIMINARY

criteria. In this way, the radiation problems of a component or system are considered. A summary survey of the components designs was made to determine the factors considered. The following paragraphs cite examples of design considerations made to implement ALARA.

12.1.2.2.2 Equipment Design Considerations to Limit Time Spent in Radiation Areas

Equipment is designed to be operated and have instrumentation and controls in accessible areas both during normal and abnormal operating conditions. Equipment such as the RWCU/SDC System and the Fuel and Auxiliary Pool Cooling System (FAPCS) are remotely operated, including the backwashing and precoat operations.

Equipment is designed to facilitate maintenance. Equipment such as the Isolation Condenser System (ICS) heat exchanger is designed with an excess of tubes in order to permit tube plugging, when necessary. Heat exchanger drains exist on the shell-side. Some valves have stem cartridge type packing that can be easily replaced. Refueling tools are designed for drainage and with smooth surfaces in order to reduce contamination. Vessel and piping insulation is easily removable.

The materials selected for use in the system have been chosen to fulfill environmental requirements. Valves, for example, use grafoil stem packing to reduce leakage and maintenance.

Past experience is factored into current designs. The steam relief valves have been redesigned as a result of in-service testing.

12.1.2.2.3 Equipment Design Considerations to Limit Component Radiation Levels

Equipment and piping are designed to reduce the accumulation of radioactive materials in the equipment. The piping, where possible, is constructed of seamless pipe as a means to reduce radioactivity accumulation on seams. The filter demineralizers in the RWCU/SDC System and FAPCS are backwashed and flushed prior to maintenance.

Equipment design provisions for limiting leaks or controlling the fluid that does leak include piping the released fluid to the sumps, and using drip pans with drains piped to the floor drains.

The materials selected for use in the primary coolant system consist mainly of austenitic stainless steel, carbon steel and low alloy steel components.

The system design includes a RWCU/SDC System on the reactor coolant. This system is designed to limit the radioactive isotopes in the coolant.

12.1.2.3 Facility Layout General Design Considerations for Maintaining Radiation Exposures ALARA

12.1.2.3.1 Minimizing Personnel Time Spent in Radiation Areas

Facility general design considerations to minimize the amount of personnel time spent in radiation areas include the following:

- Locating equipment, instruments, and sampling stations, that require routine maintenance, calibration, operation, or inspection, for ease of access and minimum required occupancy time in radiation areas;

PRELIMINARY

- Laying out plant areas to allow remote or mechanical operation, service, monitoring, or inspection of highly radioactive equipment; and
- Providing, where practicable, transportation of equipment or components requiring service to a lower radiation area. As an example, the ESBWR design includes a dedicated room for maintenance of the Hydraulic Control Units (HCUs). Room 1107 is designed for HCU maintenance, and its radiation zone classification in Figure 12.3-1 is lower than the radiation zone designation where the HCUs normally reside (Rooms 1110, 1120, 1130, and 1140).

12.1.2.3.2 Minimizing Radiation Levels in Plant Access Areas and Vicinity of Equipment

Facility general design considerations directed toward minimizing radiation levels in plant access areas and in the vicinity of equipment requiring personnel attention include the following:

- Separating radiation sources and occupied areas where practicable (e.g., pipes or ducts containing potentially high radioactive fluids not passing through occupied areas).
- Providing adequate shielding between radiation sources and access and service areas. Of special note, the reactor pressure vessel shield wall in the upper drywell extends to within half a meter of the upper drywell ceiling, thus permitting continued operation in the upper drywell during refueling and providing shielding in the case of a refueling accident.
- Locating equipment, instruments, and sampling sites in the lowest practicable radiation zone.
- Providing central control panels to permit remote operation of all safety-related instrumentation and controls from the lowest radiation zone practicable. For example, the Remote Shutdown Control Panels (Rooms 1313 and 1323) reside in a Radiation Zone "A" environment, per Figure 12.3-3; the Control Rod Drive Maintenance Control Panel (Room 2202) resides in a Radiation Zone "B" environment, per Figure 12.3-2.
- Where practicable for package units, separating highly radioactive equipment from less radioactive equipment, instruments, and controls.
- Providing adequate space for utilizing moveable shielding for sources within the service area when required.
- Providing means to control contamination and to facilitate decontamination of potentially contaminated areas where practicable.
- Providing means for service area decontamination.
- Providing space for pumps and valves outside of highly radioactive areas.
- Providing remotely-operated centrifugal discharge and/or back-flushable filter systems for highly radioactive radwaste and cleanup systems.
- Providing labyrinth entrances to radioactive pump, equipment, and valve rooms.
- Providing adequate space in labyrinth entrances for easy access.
- Maintaining ventilation airflow patterns from areas of lower radioactivity to areas of higher radioactivity.

PRELIMINARY

12.1.3 Operational Considerations

COL applicants will provide the criteria and conditions under which various operating procedures and techniques will be implemented to ensure that occupational radiation exposures ALARA are implemented using the guidance of NUREG-1736 (Reference 12.1-5) (COL 12.1-3-A), to the level of detail provided in Regulatory Guide 1.206 (Reference 12.1-6).

12.1.4 COL Information

12.1-1-A Regulatory Guide 8.10

The COL applicant will demonstrate compliance with Regulatory Guide 8.10 (Subsection 12.1.1.3.2).

12.1-2-A Regulatory Guide 1.8

The COL applicant will demonstrate compliance with Regulatory Guide 1.8 (Subsection 12.1.1.3.3).

12.1-3-A Operational Considerations

The COL applicant will provide the criteria and conditions under which various operating procedures and techniques will be implemented to ensure that occupational radiation exposures ALARA are implemented using the guidance of NUREG-1736 (Reference 12.1-5) (Subsection 12.1.3), to the level of detail provided in Regulatory Guide 1.206 (Reference 12.1-6).

12.1-4-A Regulatory Guide 8.8

The COL applicant will demonstrate compliance with Regulatory Guide 8.8 (Subsection 12.1.1.3.1).

12.1.5 References

12.1-1 USNRC, Title 10 Code of Federal Regulations, Part 20.1101(b).

12.1-2 USNRC, "Information Relevant to Ensuring that Occupational Radiation Exposures at Nuclear Power Stations Will Be as Low as Is Reasonably Achievable," Regulatory Guide 8.8, Revision 3, June 1978.

12.1-3 USNRC, "Operating Philosophy for Maintaining Occupational Radiation Exposures as Low as Is Reasonably Achievable," Regulatory Guide 8.10, Revision 1-R, May 1977.

12.1-4 USNRC, "Qualification and Training of Personnel for Nuclear Power Plants," Regulatory Guide 1.8, Revision 3, May 2000.

12.1-5 USNRC, "Consolidated Guidance: 10 CFR Part 20 – Standard for Protection Against Radiation," NUREG-1736, October 2001.

12.1-6 USNRC, "Combined License Applications for Nuclear Power Plants (LWR Edition)," Regulatory Guide 1.206, June 2007.

PRELIMINARY

12.2 PLANT SOURCES

12.2.1 Contained Sources

12.2.1.1 Primary Containment Source Terms

This subsection provides a summation of the significant radioactive source terms found in the ESBWR containment. These source terms consist of those elements which are found to contain significant quantities of radioactive materials, but do not include sources due to incidental contamination such as sources in valves due to deposition of corrosion or fission product species on the surfaces of the components. As such, the ESBWR unlike prior BWRs has only one significant source of radiation in the containment post operation, the reactor core. In addition, the Fine Motion Control Rod Drive (FMCRD) System provides the only other notable source of radiation in the containment. The ESBWR does not contain any recirculation pumps (external or internal), Traversing Incore Probe system, or heat exchangers that, as a function of normal usage, may become contaminated. Subsection 12.2.1.1.1 discusses the design of and sources found in the reactor core, while Subsection 12.2.1.1.2 discusses the other radioactive sources in containment.

12.2.1.1.1 Reactor Vessel Core Sources

The information in this section defines a reactor vessel model and pertinent data necessary to calculate neutron and gamma fluxes inside and outside of the reactor core during normal operation. Calculation of excore particle fluxes from the reactor core during operation requires a detailed analysis of neutral particle transport, and, hence, requires the use of either a deterministic solution to the Boltzmann equation or the use of probabilistic modeling techniques. The primary source for both the neutron and gamma fluxes outside of the core is the fission process. Gammas are also created by the decay of fission products, and secondary gammas resulting from neutron absorption and scattering in structural materials both inside and outside of the core. Nuclide cross-section libraries contain gamma production data for all of these sources; therefore, it is necessary only to define the neutron fission source in the core, and then to perform a coupled neutron-gamma transport calculation. The data in this section is intended to supply adequate information to generate a neutron fission source and define geometric regions sufficient to perform a fixed source calculation using either of the methods.

Also contained in this section are post-operation gamma sources in the containment. After shutdown, the neutron fluxes are negligible and N-16 quickly decays to zero. Therefore, the most significant source is the gammas resulting from fission product decay in the reactor core.

Physical Data

Table 12.2-1 presents the physical data required to form the model in Figure 12.2-1. This model was selected to provide sufficient regions to adequately portray the reactor. The incore region was divided into 25 axial nodes, with one radial node per fuel bundle. A unique neutron fission source was determined for each of these nodes using the nodal cycle average power and exposure data. Water densities were determined at each of the 25 planes for peripheral bundles and in-core bundles. Table 12.2-1 provides nominal dimensions and material volume fractions for each boundary and region in the reactor model with core average data presented for the core. To describe the reactor core, Table 12.2-1 provides thermal power, power density, core

PRELIMINARY

dimensions, core average material volume fractions, and cycle average reactor power distributions and exposures. The reactor power distributions are given for both radial and axial distributions and represent the cycle averages for an equilibrium cycle.

Core Boundary and Vessel Neutron Fluxes

Table 12.2-2 presents multigroup neutron fluxes at the representative location of the core boundary and at the vessel. The multigroup neutron fluxes and the fast neutron flux (E>1 MeV) at the peak elevation of the core boundary, vessel inside surface, and ¼ thickness of the vessel are presented in Table 12.2-2, Part A. The uncertainty of the fast neutron flux at the vessel is estimated to be within ±19%. Normalized axial variations for the fast flux at the vessel inside surface are shown in Part B of Table 12.2-2.

Gamma Ray Source Energy Spectra

Table 12.2-3 presents the average gamma ray source energy spectra in both core and non-core regions. In Table 12.2-3, Part A, the energy spectrum in the core, bypass water, shroud, downcomer, and reactor pressure vessel (RPV) is presented. This represents the average gamma ray energy released by energy group per unit volume of the region. The energy spectra in MeV per sec per cm^3 can be used with the power distributions to obtain the source in any part of the core.

The gamma ray energy spectrum includes the fission gamma rays, the fission product gamma rays, and the gamma rays resulting from inelastic neutron scattering and neutron capture. The total gamma ray energy released in the core is estimated to be accurate to within ±20%.

Post-Operation Gamma Sources

Table 12.2-3 Part B gives a gamma ray energy spectrum in MeV/sec per MW thermal in spent fuel as a function of time after operation. The data were prepared from the irradiation and decay calculation of a representative ESBWR fuel bundle to an average exposure of 35 GWd/MTU. To obtain shutdown sources in the core, the gamma ray energy spectra are combined with the core thermal power and power distributions. Shutdown sources in a single fuel element can be obtained by using the gamma ray energy spectra and the thermal power of the element during operation.

Gamma Ray and Neutron Fluxes Outside the Vessel

Table 12.2-4 presents the maximum axial neutron and gamma ray fluxes outside the vessel. The maximum axial flux occurs typically near the core midplane elevation where the maximum power density is located for the peripheral bundle. This elevation can be located using the data from Table 12.2-1. The fluxes at this elevation represent the fluxes at the peak azimuth angle. The gamma ray calculations include gamma ray sources from all regions inside the vessel and the vessel itself.

12.2.1.1.2 Other Radioactive Sources

Radioactive Sources in the Control Rod Drive System

The control rod drive (CRD) source term data are provided in Table 12.2-5. The system is described in Subsection 3.9.4.

PRELIMINARY

Reactor Startup Source

The Cf-252 reactor startup source is shipped to the site in a special cask designed with shielding. The source is transferred under water while in the cask and loaded into a stainless steel source holder. This is then loaded into the reactor while remaining under water. The source and source holder are removed from the reactor during the first refueling outage and moved to a designated location in the spent fuel pool (SFP). Operations and radiation protection personnel determine placement and duration of residence for the Cf-252 source and holder in the SFP.

12.2.1.2 Reactor Building and Fuel Building Source Terms

This section provides a summation of the significant radioactive source terms found in the ESBWR reactor building. These source terms consist of those elements which are found to contain significant quantities of radioactive materials, but do not include sources due to incidental contamination such as sources in valves and pipes due to deposition of corrosion or fission products species on the surfaces of the components.

The reactor building (RB) is divided into three specific zones:

- Containment
- Contaminated areas
- Clean areas

Radioactive Sources in the Reactor Water Cleanup/Shutdown Cooling System

A description of the RWCU/SDC System is given in Subsection 5.4.8. Radioactive sources contained in this system are the result of contamination of components by transit of reactor water through this system and accumulation of radioisotopes removed from the water. Components for this system include regenerative and non-regenerative heat exchangers, pumps, valves, and demineralizers. The accumulated sources in this system are given in Tables 12.2-6 and 12.2-7. The sources present in the demineralizers are present in all modes of operation. Therefore, backwashing capability is provided to remove residual activity with clean water plus chemical decontamination for effective radwaste handling.

12.2.1.2.1 Other Sources

Radioactive Sources in the Fuel and Auxiliary Pools Cooling System (FAPCS)

A description of the FAPCS is given in Subsection 9.1.3. The FAPCS is designed to service the fuel pools, suppression pool, Gravity Driven Cooling System (GDCS) pool, and Isolation Condenser/Passive Containment Cooling System (IC/PCCS) pools on a rotating basis. The accumulated activity in this system is the result of the accumulation of residual activity in each of the above pools. The filters are backwashed into a backwash receiving tank, which is then routed to the Radwaste Building (RW) systems. The sources for the FAPCS are given in Tables 12.2-8 and 12.2-9. Clean water connections are provided for this system to flush lines prior to switching between pools as necessary to prevent ancillary contamination between pools.

Radioactive Sources in the Spent Fuel Pool

The radiation sources in the SFP are given in Table 12.2-3 Part B in terms of MeV/sec-MWt. Water concentration is assumed as 1% of normal reactor water concentration (Section 11.1).

Radioactive Sources in the HVAC System

The Heating, Ventilation and Cooling (HVAC) System is described in Section 9.4 and employs a bypass high efficiency particulate air (HEPA) filter train for use in the event of airborne contamination of the RB or controlled purge of the RB containment. The HEPA train is capable of removing all large particulate releases and up to 70% of small particulate releases.

Radioactive Sources in the Main Steam and Feedwater Lines

All radioactive material in the main steam system results from radioactive sources carried over from the reactor core during plant operations. In most components carrying live steam, N-16 is the dominant source of radioactivity (Section 11.1). Otherwise, under conditions where sufficient decay time has removed the N-16 source, noble radiogases become the dominant source term (Section 11.1). Flow in the feedwater lines is dominated by corrosion and fission products and is the result of the residual activity of reactor steam after treatment in the condenser filter-demineralizer system.

Post-Accident Radioactive Sources

The ESBWR design limits potential radiation exposure from accidents both to plant personnel and to the public by the use of passive safety features, containment and treatment of potential accident sources. The following describes those features of the ESBWR germane to post-accident radiation sources in the RB containment and the RB.

The RB containment is an inert steel-lined pressure boundary capable of containing all accident sources with minimal leakage to the environment or other plant areas. The containment is provided with redundant passive cooling systems (Subsections 5.4.6 and 6.2.2) to insure within a reasonable probability that this primary boundary does not exceed design criteria. Drywell spray provides additional capability to control pressure. Therefore, for all but the most improbable accident scenarios requiring massive failures of all major systems including passive systems, radioactive sources from the pressure vessel are adequately contained in the RB containment.

Surrounding the containment on all sides, the ESBWR employs a RB that provides a secondary holdup volume (Subsection 6.2.3) to trap containment penetration and valve leakage except direct bypass leakage via such lines as the main steam lines and feedwater lines. All major connections from the containment, except the ICS steam lines and condensate lines and the main steam lines and feedwater lines requiring isolation valves, terminate with the second isolation valve in the RB. The RWCU/SDC System is the only high energy line in the containment and RB that could produce potential releases in the containment or RB. High energy line rupture releases in the containment are isolated by the HVAC system for holdup and treatment, except potential high energy breaks, which are then routed for release via the Reactor Building/Fuel Building (RB/FB) stack. High energy line rupture releases in the RB are routed to the refueling floor where a rupture disk relieves the overpressure. See Section 15.4 for discussions of line break releases.

Estimates on sources and location for limiting design basis events are found in Section 15.4.

12.2.1.3 Turbine Building Source Terms

This subsection provides a summation of the significant radioactive source terms found in the ESBWR turbine building (TB). These source terms consist of those elements that are found to

contain significant quantities of radioactive materials but do not include sources due to incidental contamination such as sources in valves due to deposition of corrosion or fission products species on the surfaces of the components.

Normal Operating Sources

Nitrogen-16 in the steam flow from the pressure vessel is the primary turbine building source of radioactivity. The N-16 source results in significant gamma shine from the main steam lines and steam bearing components on the order of 0.2-0.5 Gy/hr (20-50 rad/hr) contact. Other major sources of radiation in the TB are the Offgas System (OGS) (Section 11.3) and the Condensate and Feedwater System (C&FS) (Subsection 10.4.7). The OGS consists of the steam jet air ejector, recombiner, OGS condenser, and offgas charcoal tanks. Table 12.2-10 provides the sources for the OGS. The sources for the turbine condenser and feedwater filter/demineralizer system are given in Tables 12.2-11 and 12.2-12.

N-16 Skyshine Offsite Dose Contribution

The ESBWR design takes into account the use of hydrogen and noble metal injection chemistry, having conservatively used 11.1 MBq/g as the specific N-16 activity in the vessel nozzle outlet steam. This is equivalent to using a value six times the normal value of 1.85 MBq/g.

The N-16 skyshine contribution to offsite dose, as calculated using the SKYIII-PC code, is provided in Table 12.2-21.

Post-Accident Radioactive Sources

The TB contains no major sources of releasable radioactivity (discounting N-16 because of the 7.7 second half-life) and potential releases are limited to liquid releases of low activity water from the C&FS. Two other sources exist which contain radioactive species but in a form not amenable for release. The potential for accident releases from these two sources, the OGS, and the condensate demineralizers, is reduced due to heavy shielding and compartmentalizing of the components.

12.2.1.4 Radwaste Building Source Terms

This subsection provides a summation of the significant radioactive source terms found in the ESBWR RW. These source terms consist of those elements which are found to contain significant quantities of radioactive materials but do not include sources due to incidental contamination, such as sources in valves due to deposition of corrosion or fission products species on the surfaces of the components.

Normal Operating Sources

Tables 12.2-13a through 12.2-13g and 12.2-14a through 12.2-14e provide source inventories for the major radwaste components for operation. These sources are based upon the stream concentrations given in Section 11.1 and represent sources for shielding calculations. These inventories should not be construed to represent sources for offsite release. A complete description of the ESBWR radwaste system is given in Sections 11.2 through 11.4.

Post-Accident Radioactive Sources

Potential releases in the RW are contained by isolating the RW atmosphere and sealing any water releases in the building. The RW is seismically designed in accordance with Regulatory

Guide 1.143 and the tank area concrete is provided with a sealant and a steel liner, as described in Subsection 11.2.2.3.2, to prevent any potential water releases from high activity areas.

12.2.1.5 Other Contained Sources

The COL applicant will address any additional contained radiation sources (including sources for instrumentation and radiography) not identified in Subsection 12.2.1. (COL 12.2-4-A)

12.2.2 Airborne and Liquid Sources for Environmental Consideration

This subsection deals with the models, parameters, and sources required to evaluate the airborne concentration of radionuclides during plant operations in various plant radiation areas where personnel occupancy is expected. This subsection also deals with the sources and parameters required to evaluate airborne and liquid releases during normal plant operation for compliance with 10 CFR 20 and 10 CFR 50, Appendix I criteria.

12.2.2.1 Airborne Releases Offsite

Airborne sources are calculated using the source terms given in Section 11.1.

The bases for these calculations are shown in Table 12.2-15.

The ESBWR standard design employs three ventilation stacks (airborne release points). Individual stacks service the ventilation flows from the RB/FB, the TB and the RW. The offsite airborne release analysis of the ESBWR ventilation stack design employs separate long term atmospheric dispersion (X/Q) and deposition (D/Q) parameter values for each release location. The specific values for these parameters are shown in Table 12.2-15 and were determined by performing an analysis of available meteorological data for 25 sites evaluated for the ABWR program and two existing nuclear power plant sites. The meteorological data were used to generate X/Q and D/Q parameters for the each of the described release points using the XOQDOQ computer code (NUREG/CR-2919 – Reference 12.2-5). The atmospheric dispersion X/Q and D/Q parameters were generated for each of the 27 sites assuming an 800 meter exclusion area boundary (site boundary). The values shown in Table 12.2-15 were then selected to bound (i.e., were greater than) at least 97% of the maximum generated X/Q and D/Q parameters for all the evaluated sites.

The subject X/Q and D/Q values in Table 12.2-15 are used in the calculation of the gaseous effluent normal operation doses in Table 12.2-18b. Calculation of site-specific doses is discussed in Subsection 12.2.2.2.

Table 12.2-15 contains values used in calculating the annual airborne release source term provided in Table 12.2-16. Design basis noble gas, iodine, and other fission product concentrations are taken from the tables in Chapter 11. The methodology of NUREG-0016 was used in determining the annual airborne release values in Table 12.2-16. Specific details and information on the derivation of the airborne source terms are provided in Appendix 12B.

Annual Releases

Based upon the above criteria, the normal operating source terms are given in Table 12.2-16 and a comparison to 10 CFR 20 criteria is given in Table 12.2-17.

12.2.2.2 Airborne Dose Evaluation Offsite

Airborne doses were calculated based upon the criteria specified in Subsection 12.2.2.1 for compliance with 10 CFR 50, Appendix I. Doses were calculated using methodologies and conversion factors consistent with Regulatory Guides 1.109 (Reference 12.2-7) and 1.111 (Reference 12.2-8) as implemented in References 12.2-1 and 12.2-2. The airborne offsite dose calculation bases are provided in Table 12.2-18a. Default parameters of Regulatory Guide 1.109 were used in determining the offsite dose, with the exception of the explicitly stated values in Table 12.2-18a. The results of the dose analysis are given in Table 12.2-18b. The COL applicant is responsible for ensuring that offsite dose (using site-specific parameters) due to radioactive airborne effluents complies with the regulatory dose limits in Sections II.B and II.C of 10 CFR 50, Appendix I. In addition, the COL applicant is responsible for compliance with Section II.D of 10 CFR 50, Appendix I; airborne effluent concentration limits of 10 CFR 20 Appendix B (Table 2, Column 1); and dose limits of 10 CFR Parts 20.1301 and 20.1302 to members of the public. (COL 12.2-2-A)

12.2.2.3 Liquid Releases Offsite

The ESBWR Radwaste System as described in Section 11.2 is designed to monitor and process all radioactive liquid streams in the ESBWR and to provide water management for those streams. Under normal conditions, the water management is not expected to result in any routine release of radioactive effluents in the liquid discharges. However, under some conditions such as high water inventory, some processed radioactive liquid effluents may be released. By administrative control, the discharge of these effluents through the discharge line is adjusted so that it can be shown that the discharge meets the requirements of 10 CFR 20 on isotopic concentration limits and Appendix I of 10 CFR 50 on annualized dose requirements.

The bounding annualized release is shown in Table 12.2-19b. Decontamination factors listed in Table 11.2-3 were used in determining the annual liquid release to the environment. The decontamination factors used were based on two in-series ion exchangers and weighted by liquid waste volume and activity for obtaining primary coolant activity values, which were used as input to the GALE 86 computer code calculation (Reference 12.2-10). The GALE 86 code input parameters for determining the Table 12.2-19b annual liquid release values are provided in Table 12.2-19a. These parameters are listed by cards, following the standard format.

12.2.2.4 Liquid Doses Offsite

Liquid pathway doses were calculated based upon the criteria specified in Subsection 12.2.2.3 for compliance with 10 CFR 50, Appendix I. Dose conversion factors and methodologies consistent with Regulatory Guides 1.109 and 1.113 were used as described in References 12.2-7 and 12.2-4, respectively. The liquid effluent pathway offsite dose calculation bases are provided in Table 12.2-20a. It is assumed that an additional dilution factor of ten exists between the plant discharge point and the subsequent consumption or recreational activity involving liquid effluents. This assumption is expected to bound conditions found at actual sites. The LADTAPII code is used to perform the liquid effluent dose analysis (Reference 12.2-3). The results of the dose calculation are given in Table 12.2-20b. The COL applicant is responsible for ensuring that offsite dose (using site-specific parameters) due to radioactive liquid effluents complies with the regulatory dose limits in Section II.A of 10 CFR 50, Appendix I. In addition,

the COL applicant is responsible for compliance with Section II.D of 10 CFR 50, Appendix I; liquid effluent concentration limits of 10 CFR 20 Appendix B (Table 2, Column 2); and dose limits of 10 CFR Parts 20.1301 and 20.1302 to members of the public. (COL 12.2-3-A)

12.2.3 Airborne Sources Onsite

The design focuses on keeping all radioactive material in containers. Leaks from process systems, refueling, and decontamination may lead to airborne radioactivity. Equipment cubicles, corridors, and areas routinely occupied by operating personnel do not contain significant airborne radioactivity sources. Radioactive equipment that could potentially leak is installed in separate shielded compartments not routinely occupied.

In general, airflow within the building ventilation systems is from areas of low potential for airborne contamination to areas of increasing potential. Thus, routinely occupied areas are maintained at low levels of airborne radioactivity. Data from operating BWRs corroborate the general lack of airborne activity in corridors and routinely occupied operating areas (Reference 12.2-9). Air samples and surface contamination swipe samples are performed to verify the absence of airborne and surface contamination.

Process leakage results in potential release of noble gases and other volatile fission products via ventilation systems. Leakage of fluids from the process system results in the release of radionuclides into plant buildings. In general, the noble radiogases remain airborne and are released to the atmosphere with little delay via the building ventilation exhaust ducts. Other radionuclides partition between air and water and may plate-out on metal surfaces, concrete, and paint. Radioiodines are found in ventilation air as methyl iodide and as inorganic iodine (particulate, elemental, and hypoiodous acid forms).

12.2.3.1 Calculation of Airborne Radionuclides

See Appendix 12A.

12.2.3.2 Reactor Building

The RB HVAC system is discussed in Subsection 9.4.6. Subsection 12.3.3.2.3 discusses the radiation control aspects of the HVAC system.

12.2.3.2.1 Airborne Sources During Normal Operation

The main source of airborne activity in the RB is leakage of primary coolant. Therefore, airborne activities in the RB are expected to be low except in the RWCU/SDC System pump and valve cubicles. These cubicles are not normally occupied due to radiation levels.

The contaminated area ventilation system conditions and circulates air through the contaminated areas of the building. Flow is directed from the corridors (point of highest pressure) to the equipment alcove rooms, then to the rooms themselves, and finally to the external wall pipe chases and from the pipe chases back to the HVAC system.

Access into the containment drywell is not permitted during normal operation. The ventilation system inside merely circulates the air, without filtering it. The only airflow out of the drywell into accessible areas is minor leakage through the wall. During maintenance, the drywell air is purged before access is permitted.

PRELIMINARY

As a consequence of normal steam and water leakage into the drywell, equilibrium drywell concentrations exist during normal operation. Purging of this activity from the drywell to the environment occurs via the drywell purge system, which can be routed and processed through a charcoal filtration system. These are minor contributions to total plant releases.

The assumptions and parameters used to determine the airborne activity levels in the Reactor Building are listed in Table 12.2-23a. The airborne concentrations are provided in Table 12.2-23b. Even though the values presented were obtained in a very conservative manner, they are below the limits established in 10 CFR 20 Appendix B (Table 1, Column 3).

12.2.3.2.2 Airborne Sources During Refueling

Experience at operating BWRs has shown that airborne radioactivity can result from the reactor vessel dryer and separator if their surfaces are allowed to dry. Other potential airborne sources could occur during vessel head venting and fuel movement. The airborne radioactive material sources resulting from reactor vessel head removal are minimized by venting prior to removal either to the drywell purge exhaust system or to the main condenser, with vacuum supplied by the mechanical vacuum pump. The contribution to the airborne radioactivity due to the reactor vessel internals is minimized by keeping them wet or submerged.

Airborne radioactivity during refueling is expected to be similar to that observed in operating sites. Experience has shown that airborne radioactivity can result from the water in the reactor cavity exceeding 38°C (100°F) and flaking of cobalt dioxide (CoO_2) from the steam dryer and separator if their surfaces are allowed to dry. Other potential airborne sources resulting from reactor vessel head and internals removal have been determined from experience. Iodine-131, Co-60, Mn-54, Nb-95, Zr-95, Ru-103, and Ce-144 were the major radioisotopes found with Ce-141, Cs-137, Co-58, and Cr-51 at lower concentrations. The radioactive particulates ranged as high as 740 $\mu Bq/cm^3$ (2×10^{-8} Ci/cm^3) and I-131 as high as 1,500 $\mu Bq/cm^3$ (4×10^{-8} $\mu Ci/cm^3$).

To minimize airborne radioactivity, the following actions are specified:

- Maintain steam dryer and separator surfaces wet or covered.
- Cool fuel pools through large heat capacity heat exchangers.
- Fuel pool ventilation system designed to sweep the pool surface and prevent pool releases from mixing with the area atmosphere.

12.2.3.3 Fuel Building

The FB HVAC system, including radiation control aspects of the system, is discussed in Subsections 9.4.2 and 12.3.3.2.5.

The source of airborne activity in the FB is in the spent fuel storage pool and equipment areas. The ventilation system is designed to sweep air from the SFP surface, thereby removing the major portion of potential airborne contamination. In addition, evaporation from the SFP is minimized by cooling of the pool.

The assumptions and parameters used to determine the airborne activity levels in the spent fuel storage pool and equipment areas are listed in Table 12.2-23a. The airborne concentrations are provided in Table 12.2-23c. Even though the values presented were obtained in a very

PRELIMINARY

conservative manner, they are below the limits established in 10 CFR 20 Appendix B (Table 1, Column 3).

12.2.3.4 Turbine Building

The Turbine Building HVAC system (TBVS) is discussed in Subsection 9.4.4.

The main potential source of airborne radioactivity within the TB is leakage from valves on large lines carrying high-pressure steam. The design provides for collection of this leakage and its transport back to the condenser. Therefore, noble gas airborne concentrations are expected to be negligible throughout the TB except for inside the steam jet air ejector (SJAE) cubicles. These areas are not normally occupied during operation, and the exhaust from these cubicles is exhausted to the environment after filtration to eliminate the possibility of contamination of adjoining areas.

Others sources of airborne activity in the TB atmosphere is equipment leakage.

The assumptions and parameters used to determine the airborne activity levels in the TB are listed in Table 12.2-23a. The airborne concentrations are provided in Table 12.2-23d. Even though the values presented were obtained in a very conservative manner, they are below the limits established in 10 CFR 20 Appendix B (Table 1, Column 3).

12.2.3.5 Radwaste Building

The RW HVAC system is discussed in Subsection 9.4.3. Subsection 12.3.3.2.4 discusses the radiation control aspects of the HVAC system.

Corridors and routine access operating areas within the RW are not expected to have significant airborne radioactivity levels. Equipment cubicles are infrequently accessed and may contain low levels of airborne radioactivity, but design provisions are provided to minimize the release of radioactivity.

RW tanks are filled from the top and as the water splashes into the tanks, dissolved and entrained radioactivity may become airborne. This activity is not released into the atmosphere in the rooms because the tank vents are connected directly to the building ventilation system. Pumps and valves for radioactive systems in the RW are located in separate compartments that are not normally occupied. The RW ventilation design provides airflow from areas of low potential for airborne contamination to areas of increasing potential. This insures that any leakage from radwaste pumps and valves is not directed into normally occupied areas of the building, but is exhausted from the building.

The assumptions and parameters used to determine the airborne activity levels in the RW are listed in Table 12.2-23a. The airborne concentrations are provided in Table 12.2-23e. Even though the values presented were obtained in a very conservative manner, they are below the limits established in 10 CFR 20 Appendix B (Table 1, Column 3).

PRELIMINARY

12.2.4 COL Information

12.2-1-H Reactor Startup Source (Deleted)

12.2-2-A Airborne Effluents and Doses

The COL applicant is responsible for ensuring that offsite dose (using site-specific parameters) due to radioactive airborne effluents complies with the regulatory dose limits in Sections II.B and II.C of 10 CFR 50, Appendix I. In addition, the COL applicant is responsible for compliance with Section II.D of 10 CFR 50, Appendix I; airborne effluent concentration limits of 10 CFR 20 Appendix B (Table 2, Column 1); and dose limits of 10 CFR Parts 20.1301 and 20.1302 to members of the public (Subsection 12.2.2.2).

12.2-3-A Liquid Effluents and Doses

The COL applicant is responsible for ensuring that offsite dose (using site-specific parameters) due to radioactive liquid effluents complies with the regulatory dose limits in Section II.A of 10 CFR 50, Appendix I. In addition, the COL applicant is responsible for compliance with Section II.D of 10 CFR 50, Appendix I; liquid effluent concentration limits of 10 CFR 20 Appendix B (Table 2, Column 2); and dose limits of 10 CFR Parts 20.1301 and 20.1302 to members of the public (Subsection 12.2.2.4).

12.2-4-A Other Contained Sources

The COL applicant will address any additional contained radiation sources (including sources for instrumentation and radiography) not identified in Subsection 12.2.1.5.

12.2.5 References

12.2-1 USNRC, "Calculation of Releases of Radioactive Materials in Gaseous and Liquid Effluents from Boiling Water Reactors," NUREG-0016, Revision 1, January 1979.

12.2-2 USNRC, "GASPAR II Technical Reference and User Guide" NUREG/CR-4653, March 1987.

12.2-3 USNRC, "LADTAP II Technical Reference and User Guide" NUREG/CR-4013, April 1986.

12.2-4 USNRC, "Estimating Aquatic Dispersion of Effluents from Accidental and Routine Reactor Releases for the Purpose of Implementing Appendix I," Regulatory Guide 1.113, Revision 1, April 1977.

12.2-5 "XOQDOQ: Computer Program for the Meteorological Evaluation of Routine Effluent Releases at Nuclear Power Stations," NUREG/CR-2919, September 1982.

12.2-6 Deleted.

12.2-7 USNRC, "Calculation of Annual Doses to Man from Routine Releases of Reactor Effluents for the Purpose of Evaluating Compliance with 10 CFR Part 50, Appendix I," Regulatory Guide 1.109, Revision 1, October 1977.

12.2-8 USNRC, "Methods for Estimating Atmospheric Transport and Dispersion of Gaseous Effluents in Routine Releases from Light-Water-Cooled Reactors," Regulatory Guide 1.111, Revision 1, July 1977.

PRELIMINARY

12.2-9 Sources of Radioiodine at Boiler Water Reactors, EPRI NP-495, Research Project 274-1, Final Report, February 1978.

12.2-10 USNRC, "GALE86: Calculation of Routine Radioactive Releases in Gaseous and Liquid Effluents from Boiling and Pressurized Water Reactors", Radiation Safety Information Computation Center (RSICC).

PRELIMINARY

Table 12.2-1

Basic Reactor Data

A.	Reactor Thermal Power		4500 MW
B.	Average Power Density		54.33 kW/L
C.	Physical Dimensions		Fig. 12.2-1
	1.	Core Equivalent Radius, mm	2941.1
	2.	Inside Shroud Radius, mm	3171
	3.	Outside Shroud Radius, mm	3221
	4.	Inside Vessel Radius – Average, mm	3556
	5.	Outside Vessel Radius – Average, mm	3738
	6.	Outside Top Guide Radius, mm	3286
	7.	Vessel Top Head Inside Radius, mm	4866
	8.	Vessel Bottom Head Inside Radius, mm	4866
	9.	Bottom Head to Shell Knuckle Radius, mm	1092
	Elevation		
	10.	Outside of Vessel Bottom Head, (mm)	-263
	11.	Inside of Vessel Bottom Head, (mm)	0
	12.	Intersect of Bottom Head Radius & Vessel Wall, (mm)	2007
	13.	Bottom of Core Support Plate, (mm)	4127.6
	14.	Top of Core Support Plate, (mm)	4178.4
	15.	Bottom of Active Fuel, (mm)	4405
	16.	Top of Active Fuel, (mm)	7453
	17.	Bottom of Top Guide, (mm)	7718.2
	18.	Top of Fuel Channel, (mm)	7896.1
	19.	Normal Vessel Water Level, (mm)	20720
	20.	Top of Steam Dryer, (mm)	24775.5
	21.	Vessel Top Head Knuckle, (mm)	25648
	22.	Inside of Vessel Top Head, (mm)	27560
	23.	Outside of Vessel Top Head, (mm)	27720

PRELIMINARY

Table 12.2-1
Basic Reactor Data

D. Material Densities* (g/cc)				
Region	**Coolant**	**UO_2**	**Zircaloy**	**316L Stainless**
(A) Lower Plenum	0.768	0.000	0.000	0.178
(B) Core Plate & Beam	0.338	0.000	0.000	4.35
(C) Below Active Fuel	0.597	0.000	0.166	1.70
(D1) Peripheral Assemblies				
Plane 25	0.308	1.49	1.03	0.000
Plane 24	0.310	1.78	0.77	0.000
Plane 23	0.312	1.78	0.77	0.000
Plane 22	0.316	1.78	0.77	0.000
Plane 21	0.321	1.78	0.77	0.000
Plane 20	0.326	1.78	0.77	0.000
Plane 19	0.332	1.78	0.77	0.000
Plane 18	0.340	1.78	0.77	0.000
Plane 17	0.326	1.78	1.09	0.000
Plane 16	0.333	1.78	1.09	0.000
Plane 15	0.342	2.11	0.85	0.000
Plane 14	0.352	2.11	0.85	0.000
Plane 13	0.364	2.11	0.85	0.000
Plane 12	0.377	2.11	0.85	0.000
Plane 11	0.391	2.11	0.85	0.000
Plane 10	0.407	2.11	0.85	0.000
Plane 9	0.424	2.10	0.85	0.000
Plane 8	0.440	2.10	0.85	0.000
Plane 7	0.455	2.10	0.85	0.000

PRELIMINARY

Table 12.2-1
Basic Reactor Data

D. Material Densities* (g/cc)				
Region	**Coolant**	**UO_2**	**Zircaloy**	**316L Stainless**
Plane 6	0.467	2.10	0.85	0.000
Plane 5	0.474	2.10	0.85	0.000
Plane 4	0.478	2.10	0.85	0.000
Plane 3	0.480	2.10	0.85	0.000
Plane 2	0.482	2.10	0.85	0.000
Plane 1	0.483	2.17	0.85	0.000
Axial Avg	0.386	1.97	0.85	0.000
(D2) Interior Assemblies				
Plane 25	0.253	1.51	1.03	0.000
Plane 24	0.254	1.78	0.77	0.000
Plane 23	0.256	1.78	0.77	0.000
Plane 22	0.258	1.78	0.77	0.000
Plane 21	0.260	1.78	0.77	0.000
Plane 20	0.264	1.78	0.77	0.000
Plane 19	0.267	1.78	0.77	0.000
Plane 18	0.274	1.78	0.77	0.000
Plane 17	0.264	1.78	1.09	0.000
Plane 16	0.269	1.78	1.09	0.000
Plane 15	0.274	2.11	0.85	0.000
Plane 14	0.280	2.11	0.85	0.000
Plane 13	0.286	2.11	0.85	0.000
Plane 12	0.295	2.11	0.85	0.000
Plane 11	0.304	2.11	0.85	0.000
Plane 10	0.315	2.11	0.85	0.000
Plane 9	0.329	2.10	0.85	0.000
Plane 8	0.345	2.10	0.85	0.000
Plane 7	0.364	2.10	0.85	0.000
Plane 6	0.386	2.10	0.85	0.000
Plane 5	0.412	2.10	0.85	0.000

PRELIMINARY

Table 12.2-1
Basic Reactor Data

D. Material Densities* (g/cc)				
Region	**Coolant**	**UO_2**	**Zircaloy**	**316L Stainless**
Plane 4	0.441	2.10	0.85	0.000
Plane 3	0.466	2.10	0.85	0.000
Plane 2	0.479	2.10	0.85	0.000
Plane 1	0.483	2.17	0.85	0.000
Axial Avg	0.323	1.97	0.85	0.000
(E) Bypass Water	0.735	0.000	0.000	0.000
(F) Above Active Fuel	0.234	0.000	1.10	0.255
(G) Top Guide	0.240	0.000	1.00	1.21
(H) Chimney	0.390	0.000	0.000	0.000
(J,K) Downcomer	0.768	0.000	0.000	0.000

* See Figure 12.2-1 for location schematic.

PRELIMINARY

Table 12.2-1
Basic Reactor Data

E. Equilibrium Cycle Relative Power Distribution
Two-Dimensional Distribution at Core Midplane

Node	1	2	3	4	5	6	7	8	9	10
1										
2										
3										
4									0.51	0.65
5								0.58	0.82	0.97
6							0.58	0.85	1.04	1.14
7						0.58	0.73	1.06	1.13	1.26
8					0.58	0.85	1.06	1.19	1.31	1.22
9				0.51	0.82	1.04	1.13	1.31	1.32	1.43
10				0.65	0.97	1.14	1.26	1.22	1.43	1.30
11			0.54	0.87	1.09	1.23	1.06	1.26	1.43	1.45
12			0.65	1.01	1.21	1.22	1.23	1.15	1.47	1.33
13		0.47	0.86	1.13	1.24	1.41	1.44	1.49	1.42	1.52
14		0.61	0.99	1.21	1.36	1.30	1.51	1.49	1.56	1.38
15	0.44	0.70	1.04	1.16	1.40	1.47	1.32	1.48	1.42	1.53
16	0.51	0.90	1.06	1.25	1.42	1.32	1.41	1.47	1.57	1.53
17	0.56	0.94	1.12	1.33	1.20	1.47	1.36	1.54	1.40	1.54
18	0.58	0.94	1.17	1.31	1.42	1.31	1.48	1.37	1.52	1.36
19	0.55	0.92	0.93	1.21	1.27	1.44	1.24	1.26	1.35	1.45

PRELIMINARY

Table 12.2-1
Basic Reactor Data

E. Equilibrium Cycle Relative Power Distribution (Cont.)
Two-Dimensional Distribution at Core Midplane

Node	11	12	13	14	15	16	17	18	19	
1					0.44	0.51	0.56	0.58	0.55	
2			0.47	0.61	0.70	0.90	0.94	0.94	0.92	
3	0.54	0.65	0.86	0.99	1.04	1.06	1.12	1.17	0.93	
4	0.87	1.01	1.13	1.21	1.16	1.25	1.33	1.31	1.21	
5	1.09	1.21	1.24	1.36	1.40	1.42	1.20	1.42	1.27	
6	1.23	1.22	1.41	1.30	1.47	1.32	1.47	1.31	1.44	
7	1.06	1.23	1.44	1.51	1.32	1.41	1.36	1.48	1.24	
8	1.26	1.15	1.49	1.49	1.48	1.47	1.54	1.37	1.26	
9	1.43	1.47	1.42	1.56	1.42	1.57	1.40	1.52	1.35	
10	1.45	1.33	1.52	1.38	1.53	1.53	1.54	1.36	1.45	
11	1.17	1.25	1.36	1.51	1.22	1.28	1.35	1.46	1.09	
12	1.25	1.23	1.50	1.50	1.28	1.26	1.49	1.44	1.10	
13	1.36	1.50	1.36	1.52	1.35	1.49	1.35	1.48	1.31	
14	1.51	1.50	1.52	1.35	1.47	1.33	1.50	1.35	1.46	
15	1.22	1.28	1.35	1.47	1.15	1.20	1.46	1.47	1.19	
16	1.28	1.26	1.49	1.33	1.20	1.20	1.46	1.36	1.23	
17	1.35	1.49	1.35	1.50	1.46	1.46	1.32	1.47	1.30	
18	1.46	1.44	1.48	1.35	1.47	1.36	1.47	1.30	1.40	
19	1.09	1.10	1.31	1.46	1.19	1.23	1.30	1.40	1.06	

PRELIMINARY

Table 12.2-1
Basic Reactor Data

F. End of Equilibrium Cycle Average Exposure Distribution
Bundle Average Exposure (MWd/StU)

Node	1	2	3	4	5	6	7	8	9	10
1										
2										
3										
4									42135	42200
5								44916	24660	13536
6							42187	26288	14627	16072
7						42187	44815	14800	32578	17936
8					44916	26288	14800	16864	18611	37338
9				42135	24660	14627	32578	18611	35229	19936
10				42200	13536	16072	17936	37338	19936	39140
11			42236	27737	15354	17369	44183	33665	19870	19946
12			41974	13968	16968	36545	35724	44901	20370	38251
13		45216	29357	15688	34026	19729	19933	20644	38763	20957
14		41742	13389	16683	18918	38647	20493	33781	21393	39583
15	39035	42286	33302	36166	19141	19854	41822	33313	39236	20969
16	42146	29095	34717	35216	19393	39063	37227	33683	21197	20859
17	41231	28516	33232	18158	45645	20062	38553	20869	39248	21126
18	39965	27820	15960	17998	19523	38907	20278	38586	20929	38840
19	40864	12094	41543	28901	37990	19733	38479	38338	38535	20013

PRELIMINARY

Table 12.2-1
Basic Reactor Data

F. End of Equilibrium Cycle Average Exposure Distribution (Cont.)
Bundle Average Exposure (MWd/StU)

Node	11	12	13	14	15	16	17	18	19	
1					39035	42146	41231	39965	40864	
2			45216	41742	42286	29095	28516	27820	12094	
3	42236	41974	29357	13389	33302	34717	33232	15960	41543	
4	27737	13968	15688	16683	36166	35216	18158	17998	28901	
5	15354	16968	34026	18918	19141	19393	45645	19523	37990	
6	17369	36545	19729	38647	19854	39063	20062	38907	19733	
7	44183	35724	19933	20493	41822	37227	38553	20278	38479	
8	33665	44901	20644	33781	33313	33683	20869	38586	38338	
9	19870	20370	38763	21393	39236	21197	39248	20929	38535	
10	19946	38251	20957	39583	20969	20859	21126	38840	20013	
11	43322	36545	38199	20683	44544	37649	38963	20135	36588	
12	36545	37338	20460	20500	37348	37800	20495	19905	35631	
13	38199	20460	39755	20863	38755	20465	39197	20501	38429	
14	20683	20500	20863	39511	20109	38489	20602	38692	20003	
15	44544	37348	38755	20109	43177	36882	19949	20152	42689	
16	37649	37800	20465	38489	36882	37064	20028	38502	37701	
17	38963	20495	39197	20602	19949	20028	39261	20324	38629	
18	20135	19905	20501	38692	20152	38502	20324	39137	19492	
19	36588	35631	38429	20003	42689	37701	38629	19492	36118	

PRELIMINARY

Table 12.2-1
Basic Reactor Data

G. Axial Power Distribution		
Node	**Node Mid-Point Elevation (mm above BAF)**	**Relative Power**
25	2987.0	0.19
24	2865.1	0.38
23	2743.2	0.53
22	2621.3	0.66
21	2499.4	0.77
20	2377.4	0.86
19	2255.5	0.93
18	2133.6	0.97
17	2011.7	1.00
16	1889.8	1.01
15	1767.8	1.16
14	1645.9	1.19
13	1524.0	1.22
12	1402.1	1.24
11	1280.2	1.26
10	1158.2	1.27
9	1036.3	1.28
8	914.4	1.28
7	792.5	1.29
6	670.6	1.30
5	548.6	1.29
4	426.7	1.26
3	304.8	1.17
2	182.9	0.96
1	61.0	0.52

PRELIMINARY

Table 12.2-2

Neutron Fluxes at Core Boundary and RPV

Part A. Neutron Spectrum at Peak Elevation			
Upper Energy (eV)	Core Boundary (neutrons/cm^2-sec)	RPV Inside Surface (neutrons/cm^2-sec)	RPV 1/4T Thickness (neutrons/cm^2-sec)
2.000E+7	2.7E+10	1.1E+08	5.9E+07
1.000E+7	4.8E+11	9.9E+08	5.1E+08
6.065E+6	2.0E+12	2.0E+09	1.0E+09
3.679E+6	4.0E+12	2.5E+09	1.4E+09
2.231E+6	4.3E+12	2.8E+09	2.1E+09
1.353E+6	3.8E+12	2.8E+09	2.6E+09
8.209E+5	3.8E+12	3.1E+09	3.4E+09
4.979E+5	2.6E+12	2.3E+09	2.7E+09
3.020E+5	2.2E+12	1.6E+09	1.7E+09
1.832E+5	3.2E+12	2.3E+09	2.4E+09
6.738E+4	2.4E+12	1.4E+09	1.2E+09
2.479E+4	2.1E+12	1.2E+09	9.6E+08
9.119E+3	2.0E+12	1.1E+09	7.4E+08
3.355E+3	2.0E+12	1.1E+09	7.4E+08
1.234E+3	1.9E+12	1.1E+09	6.9E+08
4.540E+2	2.0E+12	1.1E+09	6.9E+08
1.670E+2	2.0E+12	1.1E+09	7.8E+08
6.144E+1	1.8E+12	9.2E+08	4.3E+08
2.260E+1	8.4E+11	4.8E+08	2.3E+08
1.371E+1	8.4E+11	4.8E+08	2.3E+08
8.315E+0	7.4E+11	4.7E+08	2.2E+08
5.044E+0	7.8E+11	4.6E+08	2.1E+08
3.059E+0	1.5E+12	8.7E+08	3.3E+08
1.125E+0	1.4E+12	7.7E+08	2.3E+08
4.140E-1	1.1E+12	6.5E+08	1.3E+08
1.523E-1	1.5E+13	5.1E+10	3.3E+09
1.389E-4			
Total Flux	6.5E+13	8.5E+10	2.9E+10
Fast Flux (E>1 MeV)	1.3E+13	1.0E+10	6.6E+09

PRELIMINARY

Table 12.2-2
Neutron Fluxes at Core Boundary and RPV

Part B. Relative Fast Flux (E>1 MeV)	
Distance from Bottom of Active Fuel (mm)	Relative Flux at RPV Inside Surface
3048.0 (TAF)	0.241
2987.0	0.301
2865.1	0.443
2743.2	0.590
2621.3	0.720
2499.4	0.822
2377.4	0.892
2255.5	0.937
2133.6	0.959
2011.7	0.974
1889.8	0.985
1767.8	0.995
1645.9	1.000
1524.0	0.996
1402.1	0.980
1280.2	0.952
1158.2	0.917
1036.3	0.873
914.4	0.823
792.5	0.767
670.6	0.706
548.6	0.640
426.7	0.567
304.8	0.481
182.9	0.380
61.0	0.269
0.0 (BAF)	0.218

PRELIMINARY

Table 12.2-3

Gamma Ray Source Energy Spectra

A. Gamma Ray Sources During Operation (MeV/sec-cm^3)					
Upper Energy (MeV)	Core	Bypass Water	Shroud	Downcomer	RPV
30	0.0E+00	0.0E+00	3.7E+04	0.0E+00	1.8E+02
17	2.8E+02	7.7E+01	6.3E+05	5.5E+00	1.7E+03
12	8.8E+04	1.9E+03	8.1E+07	1.2E+02	5.1E+05
10	3.0E+05	1.3E+04	1.4E+11	6.9E+02	3.2E+08
9	3.4E+08	8.9E+06	4.6E+11	3.8E+05	3.4E+08
8	2.5E+10	2.0E+05	1.0E+12	7.1E+03	3.6E+09
7	1.1E+11	6.8E+05	2.2E+11	2.2E+04	5.8E+08
6	4.3E+11	2.4E+06	2.4E+11	6.0E+04	6.9E+08
5	1.3E+12	1.2E+07	1.7E+11	4.6E+05	5.7E+08
4	2.6E+12	6.1E+08	1.8E+11	2.1E+07	6.2E+08
3	2.5E+12	4.3E+07	8.8E+10	1.5E+06	3.5E+08
2.5	3.9E+12	7.0E+11	1.4E+11	1.6E+10	5.0E+08
2	3.0E+12	0.0E+00	1.6E+11	0.0E+00	6.1E+08
1.66	3.4E+12	0.0E+00	1.4E+11	0.0E+00	1.9E+08
1.33	3.4E+12	8.3E+07	2.7E+10	1.9E+06	1.1E+08
1	3.5E+12	7.3E+07	2.4E+11	1.7E+06	1.0E+09
0.75	3.0E+12	3.4E+05	1.7E+10	1.2E+04	4.5E+07
0.525	3.2E+11	0.0E+00	9.9E+08	0.0E+00	1.7E+06
0.5	1.7E+12	1.2E+05	1.2E+10	5.6E+03	4.2E+07
0.3	6.9E+11	9.3E+05	1.2E+09	4.3E+04	2.6E+06
0.2	5.2E+11	2.1E+06	1.6E+09	7.6E+04	6.4E+06
0.1	1.3E+11	0.0E+00	6.9E+07	0.0E+00	1.2E+05
0.06	7.4E+10	0.0E+00	1.9E+09	0.0E+00	7.9E+06
0.03	2.5E+10	0.0E+00	7.8E+08	0.0E+00	3.5E+06
0.01					
Total	3.1E+13	7.0E+11	3.3E+12	1.7E+10	9.6E+09

PRELIMINARY

Table 12.2-3
Gamma Ray Source Energy Spectra

B. Post-Operation Gamma Sources in Core (MeV/sec-MWt)				
Upper Energy (MeV)	Time after Shutdown			
	0 Sec	1 Day	4 Days	1 Month
11	9.1E+09	1.0E+05	1.0E+05	9.7E+04
8	2.7E+13	6.7E+05	6.6E+05	6.2E+05
6	2.2E+15	2.5E+10	4.2E+06	3.9E+06
4	3.2E+15	2.5E+12	2.1E+12	5.7E+11
3	4.7E+15	2.2E+14	2.0E+14	4.9E+13
2.5	9.1E+15	2.3E+14	1.7E+14	5.9E+13
2	1.4E+16	3.9E+15	3.3E+15	8.3E+14
1.5	2.7E+16	1.5E+15	7.0E+14	1.9E+14
1	3.2E+16	7.8E+15	5.7E+15	3.5E+15
0.7	2.0E+16	5.5E+15	3.2E+15	1.3E+15
0.45	8.3E+15	1.2E+15	7.6E+14	1.6E+14
0.3	8.8E+15	2.4E+15	1.1E+15	1.1E+14
0.15	3.3E+15	1.7E+15	8.6E+14	1.5E+14
0.1	2.5E+15	4.8E+14	2.7E+14	4.7E+13
0.07	1.1E+15	1.8E+14	1.1E+14	4.3E+13
0.045	7.3E+14	1.8E+14	1.1E+14	3.8E+13
0.03	5.7E+14	9.9E+13	6.3E+13	2.3E+13
0.02	1.2E+15	2.9E+14	1.5E+14	3.7E+13
0				
Total	1.4E+17	2.6E+16	1.7E+16	6.5E+15

PRELIMINARY

Table 12.2-4

Neutron and Gamma Ray Fluxes Outside the Vessel Wall

Neutron		Gamma Ray	
Upper Energy (eV)	Neutron Flux (neutrons/cm^2-sec)	Upper Energy (MeV)	Gamma Ray Energy Flux (MeV/cm^2-sec)
2.000E+7	8.0E+06	30	3.3E+03
1.000E+7	5.8E+07	17	2.9E+04
6.065E+6	9.8E+07	12	2.2E+06
3.679E+6	1.7E+08	10	5.7E+08
2.231E+6	3.3E+08	9	1.5E+09
1.353E+6	6.3E+08	8	5.3E+09
8.209E+5	1.0E+09	7	2.1E+09
4.979E+5	8.8E+08	6	2.3E+09
3.020E+5	5.2E+08	5	2.5E+09
1.832E+5	7.2E+08	4	2.8E+09
6.738E+4	2.4E+08	3	1.5E+09
2.479E+4	2.0E+08	2.5	2.2E+09
9.119E+3	9.7E+07	2	1.5E+09
3.355E+3	8.2E+07	1.66	1.3E+09
1.234E+3	6.9E+07	1.33	1.3E+09
4.540E+2	5.9E+07	1	1.5E+09
1.670E+2	6.9E+07	0.75	7.4E+08
6.144E+1	3.0E+07	0.525	1.0E+08
2.260E+1	1.4E+07	0.5	8.5E+08
1.371E+1	1.3E+07	0.3	4.8E+08
8.315E+0	1.2E+07	0.2	2.9E+08
5.044E+0	1.0E+07	0.1	3.3E+07
3.059E+0	1.4E+07	0.06	8.4E+05
1.125E+0	7.0E+06	0.03	6.0E+03
4.140E-1	2.6E+06	0.01	
1.523E-1	1.2E+06	Total	2.9E+10
1.389E-4			
Total	5.3E+09		

PRELIMINARY

Table 12.2-5

Radioactive Sources in the Control Rod Drive System

Control Rod Drive Radiation Survey Data		
	Gamma Dose Rates Measured at Contact, mSv/hr**	
Upper Component	**Before Cleaning**	**After Cleaning**
Rotating Ball Spindle	Not measured	3.0E-01
Hollow Piston	7.5E-01	3.8E-01
Labyrinth Seal	6.0E-01	6.0E-01
Guide Tube	4.5E-01	3.0E-01
Outer Tube/Flange	3.3E+00	3.0E-01

** The gamma dose rates listed in this table are based on survey measurements taken for the FMCRD disassembly at a nuclear plant in 1988. No measurements were taken for the rotating ball spindle before cleaning

Control Blade Principal Isotopes	
Isotope	**MBq/Blade**
Cr-51	5.2E+09
Mn-54	3.4E+08
Fe-55	5.9E+09
Co-58m	3.3E+08
Co-60	4.1E+09
Ni-63	1.9E+08
Total	1.6E+10

PRELIMINARY

Table 12.2-6a

RWCU/SDC

Regenerative Heat Exchanger Tube Side Activity

Class	Isotope	MBq		Class	Isotope	MBq
Class 2	I-131	1.75E+02		**Class 6**	Sr-89	7.40E+00
	I-132	1.64E+03			Sr-91	2.85E+02
	I-133	1.18E+03			Sr-92	6.77E+02
	I-134	3.03E+03			Y-91	2.95E+00
	I-135	1.70E+03			Y-92	4.13E+02
					Y-93	2.86E+02
Class 3	Rb-89	3.08E+02			Zr-95	5.93E-01
	Cs-134	1.99E+00			Nb-95	5.93E-01
	Cs-136	1.33E+00			Mo-99	1.47E+02
	Cs-137	5.30E+00			Tc-99m	1.47E+02
	Cs-138	6.19E+02			Ru-103	1.47E+00
	Ba-137m	5.30E+00			Rh-103m	1.47E+00
					Rh-106	2.21E-01
Class 4	N-16	1.09E+04			Ag-110m	7.40E-02
					Te-129m	2.95E+00
Class 6	Na-24	1.44E+02			Te-131m	7.31E+00
	Cr-51	2.21E+02			Te-132	7.35E-01
	Mn-54	2.58E+00			Ba-140	2.95E+01
	Mn-56	1.69E+03			La-140	2.95E+01
	Fe-59	2.21E+00			Ce-141	2.21E+00
	Co-58	7.40E+00			Ce-144	2.21E-01
	Co-60	1.47E+01			Pr-144	2.21E-01
	Cu-64	2.16E+02			W-187	2.18E+01
	Zn-65	7.40E+01			Np-239	5.88E+02
					Total	**2.46E+04**

PRELIMINARY

Table 12.2-6b

RWCU/SDC

Non-Regenerative Heat Exchanger Tube Side Activity

Class	Isotope	MBq		Class	Isotope	MBq
Class 2	I-131	2.01E+02		**Class 6**	Sr-89	8.51E+00
	I-132	1.89E+03			Sr-91	3.28E+02
	I-133	1.36E+03			Sr-92	7.79E+02
	I-134	3.48E+03			Y-91	3.40E+00
	I-135	1.96E+03			Y-92	4.75E+02
					Y-93	3.29E+02
Class 3	Rb-89	3.55E+02			Zr-95	6.82E-01
	Cs-134	2.29E+00			Nb-95	6.82E-01
	Cs-136	1.53E+00			Mo-99	1.69E+02
	Cs-137	6.10E+00			Tc-99m	1.69E+02
	Cs-138	7.12E+02			Ru-103	1.70E+00
	Ba-137m	6.10E+00			Rh-103m	1.70E+00
					Rh-106	2.55E-01
Class 4	N-16	3.27E+03			Ag-110m	8.51E-02
					Te-129m	3.40E+00
Class 6	Na-24	1.66E+02			Te-131m	8.41E+00
	Cr-51	2.55E+02			Te-132	8.46E-01
	Mn-54	2.97E+00			Ba-140	3.39E+01
	Mn-56	1.95E+03			La-140	3.39E+01
	Fe-59	2.55E+00			Ce-141	2.55E+00
	Co-58	8.51E+00			Ce-144	2.55E-01
	Co-60	1.70E+01			Pr-144	2.55E-01
	Cu-64	2.48E+02			W-187	2.51E+01
	Zn-65	8.51E+01			Np-239	6.77E+02
					Total	**1.90E+04**

PRELIMINARY

Table 12.2-6c

RWCU/SDC

Regenerative Heat Exchanger Shell Side

Class	Isotope	MBq		Class	Isotope	MBq
Class 2	I-131	1.02E+02		**Class 6**	Sr-89	4.29E+00
	I-132	9.51E+02			Sr-91	1.65E+02
	I-133	6.85E+02			Sr-92	3.93E+02
	I-134	1.75E+03			Y-91	1.71E+00
	I-135	9.87E+02			Y-92	2.39E+02
					Y-93	1.66E+02
Class 3	Rb-89	1.79E+02			Zr-95	3.44E-01
	Cs-134	5.78E+00			Nb-95	3.44E-01
	Cs-136	3.85E+00			Mo-99	8.50E+01
	Cs-137	1.54E+01			Tc-99m	8.50E+01
	Cs-138	1.80E+03			Ru-103	8.55E-01
	Ba-137m	3.08E+00			Rh-103m	8.55E-01
					Rh-106	1.28E-01
Class 4	N-16	1.17E+01			Ag-110m	4.29E-02
					Te-129m	1.71E+00
Class 6	Na-24	8.37E+01			Te-131m	4.24E+00
	Cr-51	1.28E+02			Te-132	4.26E-01
	Mn-54	1.50E+00			Ba-140	1.71E+01
	Mn-56	9.82E+02			La-140	1.71E+01
	Fe-59	1.28E+00			Ce-141	1.28E+00
	Co-58	4.29E+00			Ce-144	1.28E-01
	Co-60	8.55E+00			Pr-144	1.28E-01
	Cu-64	4.29E+01			W-187	1.26E+01
	Zn-65	8.37E+01			Np-239	3.41E+02
					Total	**9.41E+03**

PRELIMINARY

Table 12.2-7

RWCU Demineralizer Activity

Class	Isotope	MBq		Class	Isotope	MBq
Class 2	I-131	9.85E+06		**Class 6**	Sr-89	2.47E+06
	I-132	1.09E+06			Sr-91	8.10E+05
	I-133	6.97E+06			Sr-92	5.39E+05
	I-134	7.77E+05			Y-91	1.08E+06
	I-135	3.31E+06			Y-92	4.28E+05
					Y-93	8.64E+05
Class 3	Rb-89	2.30E+04			Zr-95	2.33E+05
	Cs-134	8.09E+05			Nb-95	1.51E+04
	Cs-136	6.41E+04			Mo-99	2.85E+06
	Cs-137	2.33E+06			Tc-99m	2.59E+05
	Cs-138	4.90E+04			Ru-103	3.94E+05
	Ba-137m	6.56E+01			Rh-103m	4.12E+02
					Rh-106	5.49E-01
Class 4	N-16	6.03E+02			Ag-110m	5.14E+04
					Te-129m	6.83E+05
Class 6	Na-24	6.36E+05			Te-131m	6.44E+04
	Cr-51	4.29E+07			Te-132	1.68E+04
	Mn-54	1.88E+06			Ba-140	2.66E+06
	Mn-56	1.28E+06			La-140	3.49E+05
	Fe-59	6.54E+05			Ce-141	4.95E+05
	Co-58	3.08E+06			Ce-144	1.58E+05
	Co-60	1.26E+07			Pr-144	1.88E+01
	Cu-64	8.11E+05			W-187	1.54E+05
	Zn-65	5.10E+07			Np-239	9.74E+06
					Total	**1.64E+08**

PRELIMINARY

Table 12.2-8

FAPCS Filter Activity

Class	Isotope	MBq		Class	Isotope	MBq
Class 2	I-131	0.00E+00		**Class 6**	Sr-89	5.34E+04
	I-132	0.00E+00			Sr-91	4.84E+04
	I-133	0.00E+00			Sr-92	3.22E+04
	I-134	0.00E+00			Y-91	2.18E+04
	I-135	0.00E+00			Y-92	2.56E+04
					Y-93	5.16E+04
Class 3	Rb-89	0.00E+00			Zr-95	4.45E+03
	Cs-134	0.00E+00			Nb-95	3.91E+03
	Cs-136	0.00E+00			Mo-99	1.70E+05
	Cs-137	0.00E+00			Tc-99m	1.55E+04
	Cs-138	0.00E+00			Ru-103	1.00E+04
	Ba-137m	0.00E+00			Rh-103m	2.46E+01
					Rh-106	3.28E-02
Class 4	N-16	0.00E+00			Ag-110m	6.21E+02
					Te-129m	1.93E+04
Class 6	Na-24	3.80E+04			Te-131m	3.85E+03
	Cr-51	1.37E+06			Te-132	1.00E+03
	Mn-54	2.19E+04			Ba-140	1.28E+05
	Mn-56	7.65E+04			La-140	2.08E+04
	Fe-59	1.55E+04			Ce-141	1.43E+04
	Co-58	5.62E+04			Ce-144	1.87E+03
	Co-60	1.28E+05			Pr-144	1.12E+00
	Cu-64	4.84E+04			W-187	9.17E+03
	Zn-65	6.21E+05			Np-239	5.82E+05
					Total	**3.59E+06**

PRELIMINARY

Table 12.2-8a

FAPCS Demineralizer Activity

Class	Isotope	MBq		Class	Isotope	MBq
Class 2	I-131	5.88E+05		**Class 6**	Sr-89	2.26E+04
	I-132	6.49E+04			Sr-91	9.68E+03
	I-133	4.16E+05			Sr-92	6.44E+03
	I-134	4.64E+04			Y-91	9.54E+03
	I-135	1.97E+05			Y-92	5.11E+03
					Y-93	1.03E+04
Class 3	Rb-89	1.37E+03			Zr-95	2.01E+03
	Cs-134	2.51E+04			Nb-95	1.45E+03
	Cs-136	3.79E+03			Mo-99	3.41E+04
	Cs-137	6.94E+04			Tc-99m	3.10E+03
	Cs-138	2.92E+03			Ru-103	3.90E+03
	Ba-137m	3.92E+00			Rh-103m	4.92E+00
					Rh-106	6.56E-03
Class 4	N-16	0.00E+00			Ag-110m	3.44E+02
					Te-129m	7.05E+03
Class 6	Na-24	7.60E+03			Te-131m	7.69E+02
	Cr-51	4.63E+05			Te-132	2.01E+02
	Mn-54	1.23E+04			Ba-140	3.16E+04
	Mn-56	1.53E+04			La-140	4.17E+03
	Fe-59	6.26E+03			Ce-141	5.16E+03
	Co-58	2.59E+04			Ce-144	1.04E+03
	Co-60	7.62E+04			Pr-144	2.24E-01
	Cu-64	9.69E+03			W-187	1.83E+03
	Zn-65	3.43E+05			Np-239	1.16E+05
					Total	**2.65E+06**

PRELIMINARY

Table 12.2-8b

FAPCS Heat Exchanger Tube Side Activity

Class	Isotope	MBq		Class	Isotope	MBq
Class 2	I-131	4.45E+00		**Class 6**	Sr-89	1.88E-01
	I-132	4.17E+01			Sr-91	7.24E+00
	I-133	3.00E+01			Sr-92	1.72E+01
	I-134	7.69E+01			Y-91	7.50E-02
	I-135	4.32E+01			Y-92	1.05E+01
					Y-93	7.26E+00
Class 3	Rb-89	7.83E+00			Zr-95	1.51E-02
	Cs-134	5.06E-02			Nb-95	1.51E-02
	Cs-136	3.37E-02			Mo-99	3.72E+00
	Cs-137	1.35E-01			Tc-99m	3.72E+00
	Cs-138	1.57E+01			Ru-103	3.75E-02
	Ba-137m	1.35E-01			Rh-103m	3.75E-02
					Rh-106	5.63E-03
Class 4	N-16	0.00E+00			Ag-110m	1.88E-03
					Te-129m	7.50E-02
Class 6	Na-24	3.67E+00			Te-131m	1.86E-01
	Cr-51	5.63E+00			Te-132	1.87E-02
	Mn-54	6.56E-02			Ba-140	7.49E-01
	Mn-56	4.30E+01			La-140	7.49E-01
	Fe-59	5.63E-02			Ce-141	5.63E-02
	Co-58	1.88E-01			Ce-144	5.63E-03
	Co-60	3.75E-01			Pr-144	5.63E-03
	Cu-64	5.48E+00			W-187	5.53E-01
	Zn-65	1.88E+00			Np-239	1.49E+01
					Total	**3.48E+02**

PRELIMINARY

Table 12.2-9

FAPCS Backwash Receiving Tank Activity

Class	Isotope	MBq		Class	Isotope	MBq
Class 2	I-131	0.00E+00		**Class 6**	Sr-89	5.34E+04
	I-132	0.00E+00			Sr-91	4.84E+04
	I-133	0.00E+00			Sr-92	3.22E+04
	I-134	0.00E+00			Y-91	2.18E+04
	I-135	0.00E+00			Y-92	2.56E+04
					Y-93	5.16E+04
Class 3	Rb-89	0.00E+00			Zr-95	4.45E+03
	Cs-134	0.00E+00			Nb-95	3.91E+03
	Cs-136	0.00E+00			Mo-99	1.70E+05
	Cs-137	0.00E+00			Tc-99m	1.55E+04
	Cs-138	0.00E+00			Ru-103	1.00E+04
	Ba-137m	0.00E+00			Rh-103m	2.46E+01
					Rh-106	3.28E-02
Class 4	N-16	0.00E+00			Ag-110m	6.21E+02
					Te-129m	1.93E+04
Class 6	Na-24	3.80E+04			Te-131m	3.85E+03
	Cr-51	1.37E+06			Te-132	1.00E+03
	Mn-54	2.19E+04			Ba-140	1.28E+05
	Mn-56	7.65E+04			La-140	2.08E+04
	Fe-59	1.55E+04			Ce-141	1.43E+04
	Co-58	5.62E+04			Ce-144	1.87E+03
	Co-60	1.28E+05			Pr-144	1.12E+00
	Cu-64	4.84E+04			W-187	9.17E+03
	Zn-65	6.21E+05			Np-239	5.82E+05
					Total	**3.59E+06**

PRELIMINARY

Table 12.2-10a
Offgas System
Steam Jet Air Ejector Inventory

Isotope	1st Stage Ejector (MBq)	Intercooler Condenser (MBq)	2nd Stage Ejector (MBq)
Class 1			
Kr-83m	2.00E-01	5.99E+00	9.57E-02
Kr-85m	3.39E-01	1.02E+01	1.62E-01
Kr-85	1.36E-03	4.07E-02	6.50E-04
Kr-87	1.12E+00	3.34E+01	5.34E-01
Kr-88	1.12E+00	3.35E+01	5.35E-01
Kr-89	7.12E+00	1.91E+02	3.13E+00
Xe-131m	1.12E-03	3.36E-02	5.36E-04
Xe-133m	1.66E-02	4.99E-01	7.97E-03
Xe-133	4.74E-01	1.42E+01	2.27E-01
Xe-135m	1.50E+00	4.39E+01	7.03E-01
Xe-135	1.29E+00	3.87E+01	6.18E-01
Xe-137	8.84E+00	2.42E+02	3.94E+00
Xe-138	5.11E+00	1.50E+02	2.40E+00
Class 2			
I-131	1.22E-01	3.67E+00	4.99E-02
I-132	1.15E+00	3.43E+01	4.66E-01
I-133	8.28E-01	2.48E+01	3.37E-01
I-134	2.12E+00	6.32E+01	8.59E-01
I-135	1.19E+00	3.58E+01	4.86E-01
Class 3			
Rb-89	1.08E-02	3.17E-01	4.31E-03
Cs-134	6.97E-05	2.09E-03	2.84E-05
Cs-136	4.65E-05	1.39E-03	1.89E-05
Cs-137	1.86E-04	5.57E-03	7.56E-05
Cs-138	2.17E-02	6.43E-01	8.75E-03
Ba-137m	1.86E-04	4.86E-03	6.66E-05
Class 4			
N-16	6.70E+00	5.18E+04	8.99E-01
Class-5			
H-3	5.77E+00	1.73E+02	2.35E+00
Class 6			
Na-24	5.05E-03	1.51E-01	2.06E-03

PRELIMINARY

Table 12.2-10a
Offgas System
Steam Jet Air Ejector Inventory

Isotope	1st Stage Ejector (MBq)	Intercooler Condenser (MBq)	2nd Stage Ejector (MBq)
P-32	1.03E-04	3.10E-03	4.21E-05
Cr-51	7.75E-03	2.32E-01	3.16E-03
Mn-54	9.04E-05	2.71E-03	3.69E-05
Mn-56	5.92E-02	1.77E+00	2.41E-02
Fe-55	2.59E-03	7.76E-02	1.06E-03
Fe-59	7.75E-05	2.32E-03	3.16E-05
Co-58	2.59E-04	7.76E-03	1.06E-04
Co-60	5.16E-04	1.55E-02	2.10E-04
Ni-63	2.59E-06	7.76E-05	1.06E-06
Cu-64	7.55E-03	2.26E-01	3.08E-03
Zn-65	2.59E-03	7.75E-02	1.05E-03
Sr-89	2.59E-04	7.76E-03	1.06E-04
Sr-90	1.81E-05	5.43E-04	7.37E-06
Y-90	1.81E-05	5.40E-04	7.34E-06
Sr-91	9.98E-03	2.99E-01	4.07E-03
Sr-92	2.37E-02	7.09E-01	9.64E-03
Y-91	1.03E-04	3.10E-03	4.21E-05
Y-92	1.44E-02	4.32E-01	5.88E-03
Y-93	9.99E-03	3.00E-01	4.07E-03
Zr-95	2.07E-05	6.22E-04	8.45E-06
Nb-95	2.07E-05	6.22E-04	8.45E-06
Mo-99	5.13E-03	1.54E-01	2.09E-03
Tc-99m	5.13E-03	1.54E-01	2.09E-03
Ru-103	5.16E-05	1.55E-03	2.10E-05
Rh-103m	5.16E-05	1.54E-03	2.09E-05
Ru-106	7.75E-06	2.32E-04	3.16E-06
Rh-106	7.75E-06	1.16E-04	1.66E-06
Ag-110m	2.59E-06	7.76E-05	1.06E-06
Te-129m	1.03E-04	3.10E-03	4.21E-05
Te-131m	2.56E-04	7.67E-03	1.04E-04
Te-132	2.57E-05	7.72E-04	1.05E-05
Ba-140	1.03E-03	3.10E-02	4.21E-04
La-140	1.03E-03	3.10E-02	4.21E-04
Ce-141	7.75E-05	2.32E-03	3.16E-05

PRELIMINARY

Table 12.2-10a

Offgas System

Steam Jet Air Ejector Inventory

Isotope	1st Stage Ejector (MBq)	Intercooler Condenser (MBq)	2nd Stage Ejector (MBq)
Ce-144	7.75E-06	2.32E-04	3.16E-06
Pr-144	7.75E-06	2.28E-04	3.10E-06
W-187	7.62E-04	2.29E-02	3.11E-04
Np-239	2.06E-02	6.17E-01	8.39E-03
Total	**4.52E+01**	**5.29E+04**	**1.79E+01**

PRELIMINARY

Table 12.2-10b

Offgas System

Isotopic Inventory for Preheater through Charcoal Tanks

Isotope	Preheater (MBq)	Recombiner (MBq)	Condenser (MBq)	Cooler Cond. (MBq)	Dryer (MBq)	Guard Bed (MBq)	Tank 1&5 (MBq)	Tank 2&6 (MBq)	Tank 3&7 (MBq)	Tank 4&8 (MBq)
Class 1										
Kr-83m	5.87E+01	2.11E+02	2.44E+04	8.94E+02	4.39E+04	7.29E+05	1.32E+05	9.96E+01	0.00E+00	0.00E+00
Kr-85m	1.07E+02	3.84E+02	4.48E+04	1.65E+03	8.20E+04	1.91E+06	1.24E+06	6.26E+04	3.17E+03	1.60E+02
Kr-85	4.75E-01	1.71E+00	2.00E+02	7.41E+00	3.72E+02	1.14E+04	3.09E+04	3.09E+04	3.09E+04	3.09E+04
Kr-87	2.99E+02	1.08E+03	1.24E+05	4.50E+03	2.19E+05	2.86E+06	2.38E+05	6.20E+00	0.00E+00	0.00E+00
Kr-88	3.47E+02	1.25E+03	1.45E+05	5.33E+03	2.64E+05	5.29E+06	1.86E+06	1.57E+04	1.33E+02	0.00E+00
Kr-89	3.41E+00	1.22E+01	9.73E+02	2.29E+01	5.79E+02	1.60E+02	0.00E+00	0.00E+00	0.00E+00	0.00E+00
Xe-131m	3.89E-01	1.40E+00	1.64E+02	6.08E+00	3.05E+02	1.54E+05	2.64E+05	1.15E+05	5.03E+04	2.19E+04
Xe-133m	5.87E+00	2.11E+01	2.47E+03	9.15E+01	4.59E+03	1.71E+06	6.63E+05	7.69E+03	9.02E+01	0.00E+00
Xe-133	1.65E+02	5.96E+02	6.97E+04	2.58E+03	1.30E+05	5.98E+07	6.12E+07	9.35E+06	1.43E+06	2.18E+05
Xe-135m	1.33E+02	4.80E+02	5.16E+04	1.75E+03	7.50E+04	2.02E+05	0.00E+00	0.00E+00	0.00E+00	0.00E+00
Xe-135	4.32E+02	1.56E+03	1.82E+05	6.71E+03	3.35E+05	3.77E+07	1.58E+05	0.00E+00	0.00E+00	0.00E+00
Xe-137	1.39E+01	4.97E+01	4.22E+03	1.08E+02	3.04E+03	1.21E+03	0.00E+00	0.00E+00	0.00E+00	0.00E+00
Xe-138	4.11E+02	1.48E+03	1.58E+05	5.31E+03	2.25E+05	5.56E+05	0.00E+00	0.00E+00	0.00E+00	0.00E+00
Class 2										
I-131	2.89E-02	1.04E-01	1.22E+01	8.28E-04	2.66E-03	3.19E+00	0.00E+00	0.00E+00	0.00E+00	0.00E+00
I-132	2.70E-01	9.73E-01	1.13E+02	7.58E-03	2.39E-02	3.34E-01	0.00E+00	0.00E+00	0.00E+00	0.00E+00
I-133	1.96E-01	7.04E-01	8.23E+01	5.59E-03	1.79E-02	2.31E+00	0.00E+00	0.00E+00	0.00E+00	0.00E+00
I-134	4.98E-01	1.79E+00	2.05E+02	1.35E-02	4.15E-02	2.14E-01	0.00E+00	0.00E+00	0.00E+00	0.00E+00
I-135	2.82E-01	1.01E+00	1.18E+02	8.01E-03	2.56E-02	1.06E+00	0.00E+00	0.00E+00	0.00E+00	0.00E+00
Class 3										
Rb-89	2.49E-03	8.98E-03	9.61E-01	5.94E-05	1.62E-04	2.03E-04	0.00E+00	0.00E+00	0.00E+00	0.00E+00
Cs-134	1.65E-05	5.93E-05	6.94E-03	4.71E-07	1.51E-06	1.69E-01	0.00E+00	0.00E+00	0.00E+00	0.00E+00

PRELIMINARY

Table 12.2-10b

Offgas System

Isotopic Inventory for Preheater through Charcoal Tanks

Isotope	Preheater (MBq)	Recombiner (MBq)	Condenser (MBq)	Cooler Cond. (MBq)	Dryer (MBq)	Guard Bed (MBq)	Tank 1&5 (MBq)	Tank 2&6 (MBq)	Tank 3&7 (MBq)	Tank 4&8 (MBq)
Cs-136	1.10E-05	3.95E-05	4.63E-03	3.14E-07	1.01E-06	1.96E-03	0.00E+00	0.00E+00	0.00E+00	0.00E+00
Cs-137	4.38E-05	1.58E-04	1.85E-02	1.25E-06	4.03E-06	6.62E+00	0.00E+00	0.00E+00	0.00E+00	0.00E+00
Cs-138	5.07E-03	1.82E-02	2.05E+00	1.34E-04	3.98E-04	1.23E-03	0.00E+00	0.00E+00	0.00E+00	0.00E+00
Ba-137m	3.85E-05	1.38E-04	1.01E-02	3.88E-07	5.49E-07	4.89E-08	0.00E+00	0.00E+00	0.00E+00	0.00E+00
Class 4										
N-16	2.60E+00	8.35E+00	4.20E+01	2.58E-11	1.39E-12	5.24E-30	0.00E+00	0.00E+00	0.00E+00	0.00E+00
Class 5										
H-3	1.36E+00	4.91E+00	5.75E+02	3.90E-02	1.25E-01	5.94E-01	3.39E+04	0.00E+00	0.00E+00	0.00E+00
Class 6										
Na-24	1.19E-03	4.30E-03	5.02E-01	3.41E-05	1.09E-04	1.02E-02	0.00E+00	0.00E+00	0.00E+00	0.00E+00
P-32	2.44E-05	8.78E-05	1.03E-02	6.98E-07	2.24E-06	4.87E-03	0.00E+00	0.00E+00	0.00E+00	0.00E+00
Cr-51	1.83E-03	6.59E-03	7.72E-01	5.24E-05	1.68E-04	6.99E-01	0.00E+00	0.00E+00	0.00E+00	0.00E+00
Mn-54	2.14E-05	7.69E-05	9.01E-03	6.12E-07	1.96E-06	9.18E-02	0.00E+00	0.00E+00	0.00E+00	0.00E+00
Mn-56	1.40E-02	5.03E-02	5.84E+00	3.93E-04	1.24E-03	1.96E-02	0.00E+00	0.00E+00	0.00E+00	0.00E+00
Fe-55	6.11E-04	2.20E-03	2.58E-01	1.75E-05	5.62E-05	8.26E+00	0.00E+00	0.00E+00	0.00E+00	0.00E+00
Fe-59	1.83E-05	6.59E-05	7.72E-03	5.24E-07	1.68E-06	1.13E-02	0.00E+00	0.00E+00	0.00E+00	0.00E+00
Co-58	6.11E-05	2.20E-04	2.58E-02	1.75E-06	5.62E-06	6.00E-02	0.00E+00	0.00E+00	0.00E+00	0.00E+00
Co-60	1.22E-04	4.39E-04	5.14E-02	3.49E-06	1.12E-05	3.21E+00	0.00E+00	0.00E+00	0.00E+00	0.00E+00
Ni-63	6.11E-07	2.20E-06	2.58E-04	1.75E-08	5.62E-08	3.07E-01	0.00E+00	0.00E+00	0.00E+00	0.00E+00
Cu-64	1.78E-03	6.42E-03	7.50E-01	5.08E-05	1.63E-04	1.29E-02	0.00E+00	0.00E+00	0.00E+00	0.00E+00
Zn-65	6.10E-04	2.20E-03	2.57E-01	1.75E-05	5.61E-05	2.04E+00	0.00E+00	0.00E+00	0.00E+00	0.00E+00
Sr-89	6.11E-05	2.20E-04	2.58E-02	1.75E-06	5.62E-06	4.26E-02	0.00E+00	0.00E+00	0.00E+00	0.00E+00
Sr-90	4.27E-06	1.54E-05	1.80E-03	1.22E-07	3.93E-07	6.18E-01	0.00E+00	0.00E+00	0.00E+00	0.00E+00

PRELIMINARY

Table 12.2-10b

Offgas System

Isotopic Inventory for Preheater through Charcoal Tanks

Isotope	Preheater (MBq)	Recombiner (MBq)	Condenser (MBq)	Cooler Cond. (MBq)	Dryer (MBq)	Guard Bed (MBq)	Tank 1&5 (MBq)	Tank 2&6 (MBq)	Tank 3&7 (MBq)	Tank 4&8 (MBq)
Y-90	4.25E-06	1.53E-05	1.79E-03	1.22E-07	3.90E-07	1.56E-04	0.00E+00	0.00E+00	0.00E+00	0.00E+00
Sr-91	2.36E-03	8.49E-03	9.91E-01	6.71E-05	2.15E-04	1.29E-02	0.00E+00	0.00E+00	0.00E+00	0.00E+00
Sr-92	5.59E-03	2.01E-02	2.34E+00	1.57E-04	4.98E-04	8.19E-03	0.00E+00	0.00E+00	0.00E+00	0.00E+00
Y-91	2.44E-05	8.80E-05	1.03E-02	6.99E-07	2.25E-06	1.96E-02	0.00E+00	0.00E+00	0.00E+00	0.00E+00
Y-92	3.41E-03	1.23E-02	1.43E+00	9.63E-05	3.06E-04	6.65E-03	0.00E+00	0.00E+00	0.00E+00	0.00E+00
Y-93	2.36E-03	8.50E-03	9.93E-01	6.73E-05	2.15E-04	1.35E-02	0.00E+00	0.00E+00	0.00E+00	0.00E+00
Zr-95	4.90E-06	1.76E-05	2.07E-03	1.40E-07	4.51E-07	4.38E-03	0.00E+00	0.00E+00	0.00E+00	0.00E+00
Nb-95	4.90E-06	1.76E-05	2.07E-03	1.40E-07	4.51E-07	2.35E-03	0.00E+00	0.00E+00	0.00E+00	0.00E+00
Mo-99	1.21E-03	4.36E-03	5.11E-01	3.47E-05	1.11E-04	4.60E-02	0.00E+00	0.00E+00	0.00E+00	0.00E+00
Tc-99m	1.21E-03	4.36E-03	5.09E-01	3.44E-05	1.10E-04	4.06E-03	0.00E+00	0.00E+00	0.00E+00	0.00E+00
Ru-103	1.22E-05	4.39E-05	5.14E-03	3.49E-07	1.12E-06	6.64E-03	0.00E+00	0.00E+00	0.00E+00	0.00E+00
Rh-103m	1.21E-05	4.27E-05	1.38E-03	9.82E-09	4.59E-09	3.67E-12	0.00E+00	0.00E+00	0.00E+00	0.00E+00
Ru-106	1.83E-06	6.59E-06	7.72E-04	5.24E-08	1.68E-07	9.24E-03	0.00E+00	0.00E+00	0.00E+00	0.00E+00
Rh-106	9.58E-07	3.35E-06	7.35E-05	1.32E-10	3.97E-11	1.27E-15	0.00E+00	0.00E+00	0.00E+00	0.00E+00
Ag-110m	6.11E-07	2.20E-06	2.58E-04	1.75E-08	5.62E-08	2.12E-03	0.00E+00	0.00E+00	0.00E+00	0.00E+00
Te-129m	2.44E-05	8.80E-05	1.03E-02	6.99E-07	2.25E-06	1.14E-02	0.00E+00	0.00E+00	0.00E+00	0.00E+00
Te-131m	6.04E-05	2.18E-04	2.54E-02	1.73E-06	5.54E-06	1.03E-03	0.00E+00	0.00E+00	0.00E+00	0.00E+00
Te-132	6.08E-06	2.19E-05	2.56E-03	1.74E-07	5.58E-07	2.70E-04	0.00E+00	0.00E+00	0.00E+00	0.00E+00
Ba-140	2.44E-04	8.78E-04	1.03E-01	6.98E-06	2.24E-05	4.28E-02	0.00E+00	0.00E+00	0.00E+00	0.00E+00
La-140	2.44E-04	8.78E-04	1.03E-01	6.97E-06	2.24E-05	5.59E-03	0.00E+00	0.00E+00	0.00E+00	0.00E+00
Ce-141	1.83E-05	6.59E-05	7.72E-03	5.24E-07	1.68E-06	8.15E-03	0.00E+00	0.00E+00	0.00E+00	0.00E+00
Ce-144	1.83E-06	6.59E-06	7.72E-04	5.24E-08	1.68E-07	7.14E-03	0.00E+00	0.00E+00	0.00E+00	0.00E+00
Pr-144	1.80E-06	6.46E-06	7.02E-04	4.41E-08	1.23E-07	1.91E-07	0.00E+00	0.00E+00	0.00E+00	0.00E+00

PRELIMINARY

Table 12.2-10b

Offgas System

Isotopic Inventory for Preheater through Charcoal Tanks

Isotope	Preheater (MBq)	Recombiner (MBq)	Condenser (MBq)	Cooler Cond. (MBq)	Dryer (MBq)	Guard Bed (MBq)	Tank 1&5 (MBq)	Tank 2&6 (MBq)	Tank 3&7 (MBq)	Tank 4&8 (MBq)
W-187	1.80E-04	6.49E-04	7.58E-02	5.15E-06	1.65E-05	2.45E-03	0.00E+00	0.00E+00	0.00E+00	0.00E+00
Np-239	4.86E-03	1.75E-02	2.05E+00	1.39E-04	4.46E-04	1.56E-01	0.00E+00	0.00E+00	0.00E+00	0.00E+00
Total	1.98E+03	7.13E+03	8.08E+05	2.90E+04	1.38E+06	1.11E+08	6.58E+07	9.58E+06	1.51E+06	2.71E+05

PRELIMINARY

Table 12.2-11

Turbine Condenser Inventory

Isotope	Activity (MBq)	Isotope	Activity (MBq)
Class 1		**Class 6**	
Kr-83m	8.82E+03	Na-24	5.32E+01
Kr-85m	1.49E+04	P-32	1.09E+00
Kr-85	5.98E+01	Cr-51	8.16E+01
Kr-87	4.93E+04	Mn-54	9.52E-01
Kr-88	4.93E+04	Mn-56	6.24E+02
Kr-89	3.14E+05	Fe-55	2.73E+01
Xe-131m	4.93E+01	Fe-59	8.16E-01
Xe-133m	7.32E+02	Co-58	2.73E+00
Xe-133	2.09E+04	Co-60	5.44E+00
Xe-135m	6.58E+04	Ni-63	2.73E-02
Xe-135	5.68E+04	Cu-64	7.95E+01
Xe-137	3.89E+05	Zn-65	2.73E+01
Xe-138	2.25E+05	Sr-89	2.73E+00
Total	**1.21E+06**	Sr-90	1.90E-01
Class 2		Y-90	1.90E-01
I-131	1.29E+03	Sr-91	1.05E+02
I-132	1.21E+04	Sr-92	2.50E+02
I-133	8.72E+03	Y-91	1.09E+00
I-134	2.23E+04	Y-92	1.52E+02
I-135	1.26E+04	Y-93	1.05E+02
Total	**5.70E+04**	Zr-95	2.18E-01
Class 3		Nb-95	2.18E-01
Rb-89	1.14E+02	Mo-99	5.40E+01
Cs-134	7.34E-01	Tc-99m	5.40E+01
Cs-136	4.89E-01	Ru-103	5.44E-01
Cs-137	1.95E+00	Rh-103m	5.44E-01
Cs-138	2.28E+02	Ru-106	8.16E-02
Ba-137m	1.95E+00	Rh-106	8.16E-02
Total	**3.47E+02**	Ag-110m	2.73E-02
Class 4		Te-129m	1.09E+00
N-16	1.26E+08	Te-131m	2.69E+00
Class 5		Te-132	2.71E-01
H-3	6.08E+04	Ba-140	1.09E+01
		La-140	1.09E+01
		Ce-141	8.16E-01
		Ce-144	8.16E-02
		Pr-144	8.16E-02
		W-187	8.03E+00
		Np-239	2.17E+02
		Total	**1.27E+08**

PRELIMINARY

Table 12.2-12

Isotopic Inventory in the Ion Exchanger Filters

Isotope	Activity (MBq)
Class 2	
I-131	1.94E+06
I-132	2.15E+05
I-133	1.41E+06
I-134	1.52E+05
I-135	6.57E+05
Class 3	
Rb-89	2.28E+02
Cs-134	9.10E+03
Cs-136	1.18E+03
Cs-137	2.52E+04
Cs-138	9.55E+02
Ba-137m	6.48E-01
Class 6	
Sr-89	3.86E+03
Sr-90	4.93E+02
Y-90	3.17E-01
Sr-91	1.58E+03
Sr-92	1.05E+03
Y-91	1.66E+03
Y-92	8.39E+02
Y-93	1.66E+03
Zr-95	3.50E+02
Nb-95	2.47E+02
Mo-99	5.61E+03
Tc-99m	5.06E+02
Ru-103	6.68E+02
Rh-103m	7.93E-01
Ru-106	1.93E+02
Rh-106	1.06E-03
Te-129m	1.21E+03
Te-131m	1.26E+02
Te-132	3.30E+01
Ba-140	5.18E+03
La-140	6.82E+02
Ce-141	8.76E+02
Ce-144	1.88E+02
Pr-144	3.67E-02
Np-239	1.91E+04
Total	**4.47E+06**

PRELIMINARY

Table 12.2-13a

Liquid Waste Management System Equipment Drain Collection Tank Activity

Source Volume = 140 m^3

Class	Isotope	Activity Conc. (MBq/m^3)		Class	Isotope	Activity Conc. (MBq/m^3)
Class 2	I-131	6.89E+02		**Class 6**	Sr-89	1.43E+02
	I-132	6.58E+01			Sr-90	2.23E+01
	I-133	5.51E+02			Y-90	6.95E-01
	I-134	4.38E+01			Sr-91	5.68E+01
	I-135	2.19E+02			Sr-92	3.25E+01
					Y-91	6.28E+01
Class 3	Rb-89	1.25E+00			Y-92	2.67E+01
	Cs-134	7.36E+01			Y-93	5.98E+01
	Cs-136	7.25E+00			Zr-95	1.34E+01
	Cs-137	2.09E+02			Nb-95	8.76E+00
	Cs-138	5.62E+00			Mo-99	2.07E+02
	Ba-137m	3.71E-03			Tc-99m	1.72E+01
					Ru-103	2.39E+01
Class 5	H-3	9.73E+01			Rh-103m	2.33E-02
					Ru-106	8.17E+00
Class 6	Na-24	4.74E+01			Rh-106	2.95E-05
	P-32	1.98E+01			Ag-110m	2.67E+00
	Cr-51	2.61E+03			Te-129m	4.29E+01
	Mn-54	9.83E+01			Te-131m	4.85E+00
	Mn-56	7.59E+01			Te-132	1.21E+00
	Fe-55	3.08E+03			Ba-140	1.75E+02
	Fe-59	3.82E+01			La-140	2.62E+01
	Co-58	1.76E+02			Ce-141	2.97E+01
	Co-60	6.25E+02			Ce-144	7.86E+00
	Ni-63	3.24E+00			Pr-144	1.03E-03
	Cu-64	5.92E+01			W-187	1.15E+01
	Zn-65	2.65E+03			Np-239	7.17E+02
					Total	**1.31E+04**

PRELIMINARY

Table 12.2-13b

Liquid Waste Management System Equipment Drain Sample Tank Activity

Source Volume = 140 m^3

Class	Isotope	Activity Conc. (MBq/m^3)		Class	Isotope	Activity Conc. (MBq/m^3)
Class 2	I-131	5.72E-01		**Class 6**	Sr-89	1.39E-01
	I-132	1.01E-08			Sr-90	2.23E-02
	I-133	9.84E-02			Y-90	3.98E-04
	I-134	6.03E-20			Sr-91	1.40E-03
	I-135	1.05E-03			Sr-92	5.31E-08
					Y-91	0.00E+00
Class 3	Rb-89	0.00E+00			Y-92	0.00E+00
	Cs-134	7.34E-01			Y-93	0.00E+00
	Cs-136	6.47E-02			Zr-95	0.00E+00
	Cs-137	2.09E+00			Nb-95	0.00E+00
	Cs-138	0.00E+00			Mo-99	1.21E-01
	Ba-137m	0.00E+00			Tc-99m	4.37E-05
					Ru-103	0.00E+00
Class 5	H-3	9.73E+01			Rh-103m	0.00E+00
					Ru-106	0.00E+00
Class 6	Na-24	0.00E+00			Rh-106	0.00E+00
	P-32	0.00E+00			Ag-110m	0.00E+00
	Cr-51	0.00E+00			Te-129m	4.11E-02
	Mn-54	0.00E+00			Te-131m	1.47E-03
	Mn-56	0.00E+00			Te-132	7.62E-04
	Fe-55	0.00E+00			Ba-140	1.56E-01
	Fe-59	0.00E+00			La-140	0.00E+00
	Co-58	0.00E+00			Ce-141	0.00E+00
	Co-60	0.00E+00			Ce-144	0.00E+00
	Ni-63	0.00E+00			Pr-144	0.00E+00
	Cu-64	0.00E+00			W-187	0.00E+00
	Zn-65	0.00E+00			Np-239	3.80E-01
					Total	**1.02E+02**

PRELIMINARY

Table 12.2-13c

Liquid Waste Management System Floor Drain Collection Tank Activity

Source Volume = 130 m^3

Class	Isotope	Activity Conc. (MBq/m^3)		Class	Isotope	Activity Conc. (MBq/m^3)
Class 2	I-131	3.24E-01		**Class 6**	Sr-89	1.58E-02
	I-132	9.72E-02			Sr-90	1.13E-03
	I-133	6.32E-01			Y-90	6.26E-04
	I-134	6.74E-02			Sr-91	7.07E-02
	I-135	2.88E-01			Sr-92	4.74E-02
					Y-91	6.36E-03
Class 3	Rb-89	1.97E-03			Y-92	3.80E-02
	Cs-134	4.36E-03			Y-93	7.40E-02
	Cs-136	2.55E-03			Zr-95	1.27E-03
	Cs-137	1.16E-02			Nb-95	1.25E-03
	Cs-138	8.76E-03			Mo-99	1.83E-01
	Ba-137m	5.86E-06			Tc-99m	2.29E-02
					Ru-103	3.10E-03
Class 5	H-3	3.64E-01			Rh-103m	3.58E-05
					Ru-106	4.71E-04
Class 6	Na-24	5.60E-02			Rh-106	4.66E-08
	P-32	5.82E-03			Ag-110m	1.63E-04
	Cr-51	4.44E-01			Te-129m	6.22E-03
	Mn-54	5.79E-03			Te-131m	5.34E-03
	Mn-56	1.11E-01			Te-132	9.99E-04
	Fe-55	1.63E-01			Ba-140	5.72E-02
	Fe-59	4.55E-03			La-140	2.74E-02
	Co-58	1.60E-02			Ce-141	4.48E-03
	Co-60	3.23E-02			Ce-144	4.70E-04
	Ni-63	1.64E-04			Pr-144	1.61E-06
	Cu-64	7.11E-02			W-187	1.30E-02
	Zn-65	1.63E-01			Np-239	6.79E-01
					Total	**4.14E+00**

PRELIMINARY

Table 12.2-13d

Liquid Waste Management System Floor Drain Sample Tank Activity

Source Volume = 130 m^3

Class	Isotope	Activity Conc. (MBq/m^3)		Class	Isotope	Activity Conc. (MBq/m^3)
Class 2	I-131	2.09E-05		**Class 6**	Sr-89	1.48E-06
	I-132	0.00E+00			Sr-90	1.13E-07
	I-133	1.08E-06			Y-90	1.68E-08
	I-134	0.00E+00			Sr-91	1.12E-09
	I-135	9.56E-11			Sr-92	1.01E-19
					Y-91	0.00E+00
Class 3	Rb-89	0.00E+00			Y-92	0.00E+00
	Cs-134	2.17E-05			Y-93	0.00E+00
	Cs-136	9.72E-06			Zr-95	0.00E+00
	Cs-137	5.82E-05			Nb-95	0.00E+00
	Cs-138	0.00E+00			Mo-99	5.15E-06
	Ba-137m	0.00E+00			Tc-99m	1.71E-12
					Ru-103	0.00E+00
Class 5	H-3	3.63E-02			Rh-103m	0.00E+00
					Ru-106	0.00E+00
Class 6	Na-24	0.00E+00			Rh-106	0.00E+00
	P-32	0.00E+00			Ag-110m	0.00E+00
	Cr-51	0.00E+00			Te-129m	5.61E-07
	Mn-54	0.00E+00			Te-131m	3.19E-08
	Mn-56	0.00E+00			Te-132	3.37E-08
	Fe-55	0.00E+00			Ba-140	4.34E-06
	Fe-59	0.00E+00			La-140	0.00E+00
	Co-58	0.00E+00			Ce-141	0.00E+00
	Co-60	0.00E+00			Ce-144	0.00E+00
	Ni-63	0.00E+00			Pr-144	0.00E+00
	Cu-64	0.00E+00			W-187	0.00E+00
	Zn-65	0.00E+00			Np-239	1.52E-05
					Total	**3.66E-02**

PRELIMINARY

Table 12.2-13e

Liquid Waste Management System Chemical Collection Tank Activity

Source Volume = 4 m^3

Class	Isotope	Activity Conc. (MBq/m^3)		Class	Isotope	Activity Conc. (MBq/m^3)
Class 2	I-131	7.56E+00		**Class 6**	Sr-89	3.25E-01
	I-132	7.42E+00			Sr-90	2.26E-02
	I-133	3.22E+01			Y-90	1.91E-02
	I-134	5.14E+00			Sr-91	4.85E+00
	I-135	2.12E+01			Sr-92	3.62E+00
					Y-91	1.30E-01
Class 3	Rb-89	1.50E-01			Y-92	2.90E+00
	Cs-134	8.73E-02			Y-93	5.02E+00
	Cs-136	5.62E-02			Zr-95	2.60E-02
	Cs-137	2.33E-01			Nb-95	2.59E-02
	Cs-138	6.68E-01			Mo-99	5.51E+00
	Ba-137m	4.47E-04			Tc-99m	1.71E+00
					Ru-103	6.40E-02
Class 5	H-3	7.28E+00			Rh-103m	2.73E-03
					Ru-106	9.45E-03
Class 6	Na-24	3.31E+00			Rh-106	3.55E-06
	P-32	1.27E-01			Ag-110m	3.27E-03
	Cr-51	9.31E+00			Te-129m	1.29E-01
	Mn-54	1.16E-01			Te-131m	2.26E-01
	Mn-56	8.48E+00			Te-132	2.85E-02
	Fe-55	3.27E+00			Ba-140	1.26E+00
	Fe-59	9.36E-02			La-140	1.01E+00
	Co-58	3.25E-01			Ce-141	9.33E-02
	Co-60	6.48E-01			Ce-144	9.45E-03
	Ni-63	3.27E-03			Pr-144	1.23E-04
	Cu-64	4.48E+00			W-187	6.17E-01
	Zn-65	3.27E+00			Np-239	2.17E+01
					Total	**1.65E+02**

PRELIMINARY

Table 12.2-13f

Liquid Waste Management System Detergent Collection Tank Activity

Source Volume = 15 m^3

Class	Isotope	Activity Conc. (MBq/m^3)		Class	Isotope	Activity Conc. (MBq/m^3)
Class 2	I-131	1.71E+01		**Class 6**	Sr-89	7.98E-01
	I-132	6.59E+00			Sr-90	5.64E-02
	I-133	4.15E+01			Y-90	3.61E-02
	I-134	4.57E+00			Sr-91	4.79E+00
	I-135	1.96E+01			Sr-92	3.22E+00
					Y-91	3.20E-01
Class 3	Rb-89	1.33E-01			Y-92	2.58E+00
	Cs-134	2.18E-01			Y-93	5.01E+00
	Cs-136	1.32E-01			Zr-95	6.42E-02
	Cs-137	5.82E-01			Nb-95	6.31E-02
	Cs-138	5.94E-01			Mo-99	1.05E+01
	Ba-137m	3.98E-04			Tc-99m	1.56E+00
					Ru-103	1.57E-01
Class 5	H-3	1.82E+01			Rh-103m	2.43E-03
					Ru-106	2.36E-02
Class 6	Na-24	3.76E+00			Rh-106	3.16E-06
	P-32	3.00E-01			Ag-110m	8.14E-03
	Cr-51	2.26E+01			Te-129m	3.15E-01
	Mn-54	2.90E-01			Te-131m	3.37E-01
	Mn-56	7.54E+00			Te-132	5.63E-02
	Fe-55	8.17E+00			Ba-140	2.96E+00
	Fe-59	2.30E-01			La-140	1.67E+00
	Co-58	8.04E-01			Ce-141	2.27E-01
	Co-60	1.62E+00			Ce-144	2.35E-02
	Ni-63	8.19E-03			Pr-144	1.09E-04
	Cu-64	4.80E+00			W-187	8.40E-01
	Zn-65	8.14E+00			Np-239	3.96E+01
					Total	**2.43E+02**

PRELIMINARY

Table 12.2-13g

Liquid Waste Management System Detergent Sample Tank Activity

Source Volume = 15 m^3

Class	Isotope	Activity Conc. (MBq/m^3)		Class	Isotope	Activity Conc. (MBq/m^3)
Class 2	I-131	1.24E+01		**Class 6**	Sr-89	7.58E-01
	I-132	9.11E-12			Sr-90	5.64E-02
	I-133	2.07E+00			Y-90	1.36E-02
	I-134	0.00E+00			Sr-91	7.60E-03
	I-135	1.79E-03			Sr-92	2.72E-10
					Y-91	0.00E+00
Class 3	Rb-89	0.00E+00			Y-92	0.00E+00
	Cs-134	2.17E-01			Y-93	0.00E+00
	Cs-136	1.08E-01			Zr-95	0.00E+00
	Cs-137	5.82E-01			Nb-95	0.00E+00
	Cs-138	0.00E+00			Mo-99	4.12E+00
	Ba-137m	0.00E+00			Tc-99m	4.75E-05
					Ru-103	0.00E+00
Class 5	H-3	1.82E+01			Rh-103m	0.00E+00
					Ru-106	0.00E+00
Class 6	Na-24	0.00E+00			Rh-106	0.00E+00
	P-32	0.00E+00			Ag-110m	0.00E+00
	Cr-51	0.00E+00			Te-129m	2.92E-01
	Mn-54	0.00E+00			Te-131m	4.23E-02
	Mn-56	0.00E+00			Te-132	2.53E-02
	Fe-55	0.00E+00			Ba-140	2.42E+00
	Fe-59	0.00E+00			La-140	0.00E+00
	Co-58	0.00E+00			Ce-141	0.00E+00
	Co-60	0.00E+00			Ce-144	0.00E+00
	Ni-63	0.00E+00			Pr-144	0.00E+00
	Cu-64	0.00E+00			W-187	0.00E+00
	Zn-65	0.00E+00			Np-239	1.31E+01
					Total	**5.44E+01**

PRELIMINARY

Table 12.2-14a

Solid Waste Management System High Activity Resin Holdup Tank Activity

Source Volume = 70 m^3

Class	Isotope	Activity Conc. (MBq/m^3)		Class	Isotope	Activity Conc. (MBq/m^3)
Class 2	I-131	5.01E+05		**Class 6**	Sr-90	
	I-132	5.53E+04			Y-90	
	I-133	3.54E+05			Sr-91	4.12E+04
	I-134	3.95E+04			Sr-92	2.74E+04
	I-135	1.68E+05			Y-91	7.07E+04
					Y-92	2.17E+04
Class 3	Rb-89	1.17E+03			Y-93	4.39E+04
	Cs-134	1.10E+05			Zr-95	1.60E+04
	Cs-136	3.26E+03			Nb-95	1.04E+03
	Cs-137	3.49E+05			Mo-99	1.45E+05
	Cs-138	2.49E+03			Tc-99m	1.32E+04
	Ba-137m	3.33E+00			Ru-103	2.28E+04
					Rh-103m	2.09E+01
Class 6	Na-24	3.23E+04			Ru-106	
	P-32				Rh-106	2.79E-02
	Cr-51	2.29E+06			Ag-110m	5.80E+03
	Mn-54	2.23E+05			Te-129m	3.79E+04
	Mn-56	6.51E+04			Te-131m	3.27E+03
	Fe-55				Te-132	8.56E+02
	Fe-59	3.92E+04			Ba-140	1.35E+05
	Co-58	2.20E+05			La-140	1.77E+04
	Co-60	1.82E+06			Ce-141	2.72E+04
	Ni-63				Ce-144	1.84E+04
	Cu-64	4.12E+04			Pr-144	9.53E-01
	Zn-65	5.70E+06			W-187	7.81E+03
	Sr-89	1.54E+05			Np-239	4.95E+05
					Total	**1.33E+07**

PRELIMINARY

Table 12.2-14b

Solid Waste Management System Low Activity Resin Holdup Tank Activity

Source Volume = 70 m^3

Class	Isotope	Activity Conc. (MBq/m^3)		Class	Isotope	Activity Conc. (MBq/m^3)
Class 2	I-131	1.46E+05		**Class 6**	Sr-90	
	I-132	4.37E-04			Y-90	
	I-133	5.17E+03			Sr-91	6.19E+01
	I-134	2.60E-15			Sr-92	2.29E-03
	I-135	4.56E+01			Y-91	1.61E+04
					Y-92	9.25E-03
Class 3	Rb-89	1.61E-63			Y-93	1.55E+01
	Cs-134	3.87E+05			Zr-95	3.66E+03
	Cs-136	3.47E+03			Nb-95	1.58E+03
	Cs-137	1.34E+06			Mo-99	1.25E+04
	Cs-138	3.18E-27			Tc-99m	1.89E+00
	Ba-137m	0.00E+00			Ru-103	4.72E+03
					Rh-103m	4.51E-18
Class 6	Na-24	4.17E+01			Ru-106	
	P-32				Rh-106	0.00E+00
	Cr-51	3.89E+05			Ag-110m	1.49E+03
	Mn-54	5.99E+04			Te-129m	3.78E+04
	Mn-56	6.24E-04			Te-131m	9.12E+01
	Fe-55				Te-132	8.93E+01
	Fe-59	8.28E+03			Ba-140	6.10E+04
	Co-58	5.09E+04			La-140	1.58E+02
	Co-60	5.52E+05			Ce-141	5.04E+03
	Ni-63				Ce-144	4.61E+03
	Cu-64	3.27E+01			Pr-144	9.14E-57
	Zn-65	1.46E+06			W-187	2.85E+01
	Sr-89	1.68E+05			Np-239	3.49E+04
					Total	**9.50E+06**

PRELIMINARY

Table 12.2-14c

Solid Waste Management System Phase Separator Tank Activity

Source Volume = 55 m^3

Class	Isotope	Activity Conc. (MBq/m^3)		Class	Isotope	Activity Conc. (MBq/m^3)
Class 2	I-131	0.00E+00		**Class 6**	Sr-90	
	I-132	0.00E+00			Y-90	
	I-133	0.00E+00			Sr-91	2.83E+04
	I-134	0.00E+00			Sr-92	1.86E+04
	I-135	0.00E+00			Y-91	1.24E+05
					Y-92	1.50E+04
Class 3	Rb-89	0.00E+00			Y-93	3.07E+04
	Cs-134	0.00E+00			Zr-95	2.68E+04
	Cs-136	0.00E+00			Nb-95	1.68E+04
	Cs-137	0.00E+00			Mo-99	9.25E+04
	Cs-138	0.00E+00			Tc-99m	9.03E+03
	Ba-137m	0.00E+00			Ru-103	4.61E+04
					Rh-103m	1.39E+01
Class 6	Na-24	2.51E+04			Ru-106	
	P-32				Rh-106	1.17E-03
	Cr-51	4.95E+06			Ag-110m	7.34E+03
	Mn-54	2.86E+05			Te-129m	4.60E+03
	Mn-56	4.50E+04			Te-131m	2.24E+03
	Fe-55				Te-132	5.20E+02
	Fe-59	7.45E+04			Ba-140	3.89E+04
	Co-58	3.56E+05			La-140	2.20E+04
	Co-60	2.38E+06			Ce-141	5.69E+04
	Ni-63				Ce-144	2.24E+04
	Cu-64	3.04E+04			Pr-144	6.05E-01
	Zn-65	7.21E+06			W-187	7.23E+03
	Sr-89	1.19E+04			Np-239	3.25E+05
					Total	**1.63E+07**

PRELIMINARY

Table 12.2-14d

Solid Waste Management System Condensate Resin Holdup Tank Activity

Source Volume = 70 m^3

Class	Isotope	Activity Conc. (MBq/m^3)		Class	Isotope	Activity Conc. (MBq/m^3)
Class 2	I-131	2.30E+05		**Class 6**	Sr-90	
	I-132	2.54E+04			Y-90	
	I-133	1.67E+05			Sr-91	1.87E+02
	I-134	1.80E+04			Sr-92	1.24E+02
	I-135	7.78E+04			Y-91	1.96E+02
					Y-92	9.93E+01
Class 3	Rb-89	2.70E+01			Y-93	1.96E+02
	Cs-134	1.08E+03			Zr-95	4.14E+01
	Cs-136	1.40E+02			Nb-95	2.92E+01
	Cs-137	2.98E+03			Mo-99	6.64E+02
	Cs-138	1.13E+02			Tc-99m	5.99E+01
	Ba-137m	7.67E-02			Ru-103	7.91E+01
					Rh-103m	9.38E-02
Class 6	Na-24	0.00E+00			Ru-106	
	P-32				Rh-106	1.25E-04
	Cr-51	0.00E+00			Ag-110m	0.00E+00
	Mn-54	0.00E+00			Te-129m	1.43E+02
	Mn-56	0.00E+00			Te-131m	1.49E+01
	Fe-55				Te-132	3.91E+00
	Fe-59	0.00E+00			Ba-140	6.13E+02
	Co-58	0.00E+00			La-140	8.07E+01
	Co-60	0.00E+00			Ce-141	1.04E+02
	Ni-63				Ce-144	2.22E+01
	Cu-64	0.00E+00			Pr-144	4.34E-03
	Zn-65	0.00E+00			W-187	0.00E+00
	Sr-89	4.57E+02			Np-239	2.26E+03
					Total	**5.27E+05**

PRELIMINARY

Table 12.2-14e

Solid Waste Management System Concentrate Waste Tank Activity

Source Volume = 60 m^3

Class	Isotope	Activity Conc. (MBq/m^3)		Class	Isotope	Activity Conc. (MBq/m^3)
Class 2	I-131	1.38E+00		**Class 6**	Sr-90	
	I-132	1.83E-17			Y-90	
	I-133	2.57E-02			Sr-91	2.62E-05
	I-134	1.01E-43			Sr-92	2.37E-15
	I-135	2.24E-06			Y-91	4.73E-02
					Y-92	7.31E-13
Class 3	Rb-89	8.31E-156			Y-93	8.17E-06
	Cs-134	6.19E-01			Zr-95	1.05E-02
	Cs-136	1.91E-02			Nb-95	5.50E-03
	Cs-137	1.93E+00			Mo-99	1.67E-01
	Cs-138	5.87E-71			Tc-99m	3.99E-08
	Ba-137m	0.00E+00			Ru-103	1.56E-02
					Rh-103m	7.80E-45
Class 6	Na-24	9.47E-05			Ru-106	
	P-32				Rh-106	0.00E+00
	Cr-51	1.54E+00			Ag-110m	3.43E-03
	Mn-54	1.33E-01			Te-129m	1.34E-01
	Mn-56	3.10E-16			Te-131m	7.94E-04
	Fe-55				Te-132	1.19E-03
	Fe-59	2.61E-02			Ba-140	4.22E-01
	Co-58	1.44E-01			La-140	1.78E-03
	Co-60	1.02E+00			Ce-141	1.83E-02
	Ni-63				Ce-144	1.04E-02
	Cu-64	4.36E-05			Pr-144	2.17E-134
	Zn-65	3.37E+00			W-187	1.82E-04
	Sr-89	5.11E-01			Np-239	4.57E-01
					Total	**1.20E+01**

PRELIMINARY

Table 12.2-15

Airborne Sources Calculation

Calculation Bases	
Methodology	Appendix 12B
Noble Gas Source at t=30 min	740 MBq/sec (20,000 µCi/sec)
I-131 Release Rate	3.7 MBq/sec (100 µCi/sec)
Meteorology Boundary	800 Meters
Meteorology χ/Q	
RB/FB Ventilation Stack	3.0E-07 s/m^3
TB Ventilation Stack	2.0E-07 s/m^3
RW Ventilation Stack	2.0E-05 s/m^3
Meteorology D/Q	
RB/FB Ventilation Stack	1.0E-08 m^{-2}
TB Ventilation Stack	6.0E-09 m^{-2}
RW Ventilation Stack	3.0E-08 m^{-2}
Plant Availability Factor	0.92
Offgas System:	
Offgas stream temperature	100°F
Flow rate at 100°F	54 m^3/hr
K_d (Kr)	18.5 cm^3/g
K_d (Xe)	330 cm^3/g
K_d (Ar)	6.4 cm^3/g
Guard tank charcoal mass	7,500 kg (single tank)
Adsorber tank charcoal mass	27,750 kg (each)
Adsorber tank arrangement	2 parallel trains of 4 tanks each
Turbine Gland Sealing System Exhaust:	
I-131 release	0.81 Ci/yr per µCi/g of I-131 in coolant
I-133 release	0.22 Ci/yr per µCi/g of I-133 in coolant

PRELIMINARY

Table 12.2-16

Annual Airborne Releases for Offsite Dose Evaluations (MBq)**

Nuclide*	Reactor Building	Turbine Building	Radwaste Building	Mechanical Vacuum Pump	Turbine Seal	Offgas System	Drywell
Kr-83m						1.4E-04	8.5E+01
Kr-85m	9.0E+04	5.6E+05				6.6E+03	3.4E+02
Kr-85						5.2E+06	7.5E+01
Kr-87	4.5E+04	1.4E+06				8.5E-10	3.1E+02
Kr-88	9.0E+04	2.0E+06				1.4E+01	6.9E+02
Kr-89	4.5E+04	1.3E+07	6.5E+05				8.3E+01
Xe-131m						1.5E+05	4.1E+01
Xe-133m						8.1E-01	1.9E+02
Xe-133	2.5E+06	3.4E+06	5.0E+06	2.9E+07		8.5E+05	1.1E+04
Xe-135m	1.4E+06	9.0E+06	1.2E+07				8.5E+01
Xe-135	2.9E+06	7.4E+06	6.3E+06	1.1E+07		4.4E-37	2.6E+03
Xe-137	4.1E+06	2.3E+07	1.9E+06				1.2E+02
Xe-138	1.8E+05	2.3E+07	4.5E+04				2.7E+02
I-131	9.4E+02	5.2E+03	3.4E+02	1.8E+03	4.7E+01		3.4E+02
I-132	8.5E+03	4.6E+04	3.0E+03				4.9E+01
I-133	6.2E+03	3.4E+04	2.2E+03		8.4E+01		3.3E+02
I-134	1.5E+04	8.4E+04	5.5E+03				3.4E+01
I-135	8.6E+03	4.7E+04	3.1E+03				1.4E+02
H-3	1.2E+06	1.2E+06					2.6E+05
C-14						5.3E+05	
Na-24							5.4E+00
P-32							1.3E+00
Ar-41						1.4E+03	
Cr-51	2.6E+01	2.2E+01	1.7E+01				1.1E+02
Mn-54	3.3E+01	1.4E+01	9.6E+01				1.7E+00
Mn-56							1.1E+01
Fe-55							4.7E+01

PRELIMINARY

Table 12.2-16

Annual Airborne Releases for Offsite Dose Evaluations (MBq)**

Nuclide*	Reactor Building	Turbine Building	Radwaste Building	Mechanical Vacuum Pump	Turbine Seal	Offgas System	Drywell
Fe-59	9.3E+00	2.4E+00	7.2E+00				1.2E+00
Co-58	7.2E+00	2.4E+01	4.8E+00				4.4E+00
Co-60	1.2E+02	2.4E+01	1.7E+02				9.4E+00
Ni-63							4.7E-02
Cu-64							6.9E+00
Zn-65	1.2E+02	1.4E+02	7.2E+00				4.6E+01
Rb-89							2.0E-01
Sr-89	1.2E+00	1.4E+02					4.3E+00
Sr-90	2.4E-01	4.8E-01					3.3E-01
Y-90							8.1E-02
Sr-91							6.7E+00
Sr-92							4.6E+00
Y-91							1.7E+00
Y-92							3.7E+00
Y-93							7.2E+00
Zr-95	2.4E+01	9.6E-01	1.9E+01				3.5E-01
Nb-95	2.4E+02	1.4E-01	9.6E-02				3.3E-01
Mo-99	1.6E+03	4.8E+01	7.2E-02				2.4E+01
Tc-99m							2.2E+00
Ru-103	1.0E+02	1.2E+00	2.4E-02				8.2E-01
Rh-103m							3.5E-03
Ru-106							1.4E-01
Rh-106							4.5E-06
Ag-110m	5.7E-02						4.6E-02
Sb-124	1.2E+00	2.4E+00	1.7E+00				
Te-129m							1.6E+00
Te-131m							5.5E-01
Te-132							1.4E-01
Cs-134	1.1E+02	4.8E+00	5.7E+01				1.3E+00
Cs-136	1.2E+01	2.4E+00					5.8E-01
Cs-137	1.4E+02	2.4E+01	9.6E+01				3.4E+00
Cs-138							8.5E-01
Ba-140	5.3E+02	2.4E+02	9.6E-02				1.3E+01
La-140							1.3E+01

PRELIMINARY

Table 12.2-16

Annual Airborne Releases for Offsite Dose Evaluations (MBq)**

Nuclide*	Reactor Building	Turbine Building	Radwaste Building	Mechanical Vacuum Pump	Turbine Seal	Offgas System	Drywell
Ce-141	2.2E+01	2.4E+02	1.7E-01				1.2E+00
Ce-144							1.3E-01
Pr-144							1.6E-04
W-187							1.3E+00
Np-239							8.3E+01

* Table 11.1-5a provides the basis for the airborne releases of the following radionuclide pairs:
Sr-90/Y-90
Zr-95/Nb-95
Mo-99/Tc-99m
Ru-103/Rh-103m
Ru-106/Rh-106
Ba-140/La-140
Ce-144/Pr-144
The coolant concentration of the daughter in Table 11.1-5a is assumed to be that of the parent. The annual airborne release of each radionuclide is determined utilizing the methodology provided in Appendix 12B.

** The releases (as designed in the table column headings) from the building stacks are as follows:
Reactor Building/FB stack: "Reactor Building" and "Drywell"
Turbine Building stack: "Turbine Building", "Mechanical Vacuum Pump", "Turbine Seal", and "Offgas System"
Radwaste Building stack: "Radwaste Building"

PRELIMINARY

Table 12.2-17
Comparison of Airborne Concentrations with 10 CFR 20 Concentrations

	Airborne Release	Concentration	10 CFR 20
Nuclide	**MBq/yr**	**Bq/m^3**	**Bq/m^3**
Kr-83m	8.5E+01	8.0E-07	2.E+06
Kr-85m	6.6E+05	4.5E-03	4.E+03
Kr-85	5.2E+06	3.3E-02	3.E+04
Kr-87	1.4E+06	9.1E-03	7.E+02
Kr-88	2.1E+06	1.4E-02	3.E+02
Kr-89	1.4E+07	5.0E-01	4.E+01
Xe-131m	1.5E+05	9.3E-04	7.E+04
Xe-133m	1.9E+02	1.8E-06	2.E+04
Xe-133	4.1E+07	3.4E+00	2.E+04
Xe-135m	2.2E+07	7.6E+00	1.E+03
Xe-135	2.8E+07	4.1E+00	3.E+03
Xe-137	2.8E+07	1.4E+00	4.E+01
Xe-138	2.3E+07	1.7E-01	7.E+02
I-131	8.7E+03	2.7E-04	7.E+00
I-132	5.8E+04	2.3E-03	7.E+02
I-133	4.3E+04	1.7E-03	4.E+01
I-134	1.1E+05	4.2E-03	2.E+03
I-135	5.9E+04	2.3E-03	2.E+02
H-3	2.8E+06	2.2E-02	4.E+03
C-14	5.3E+05	3.4E-03	1.E+02
Na-24	5.4E+00	5.2E-08	3.E+02
P-32	1.3E+00	1.3E-08	2.E+01
Ar-41	1.4E+03	9.0E-06	4.E+02
Cr-51	1.8E+02	1.2E-05	1.E+03
Mn-54	1.5E+02	6.1E-05	4.E+01

PRELIMINARY

Table 12.2-17
Comparison of Airborne Concentrations with 10 CFR 20 Concentrations

	Airborne Release	Concentration	10 CFR 20
Nuclide	**MBq/yr**	**Bq/m^3**	**Bq/m^3**
Mn-56	1.1E+01	1.0E-07	7.E+02
Fe-55	4.7E+01	4.5E-07	1.E+02
Fe-59	2.0E+01	4.7E-06	2.E+01
Co-58	4.0E+01	3.3E-06	4.E+01
Co-60	3.2E+02	1.1E-04	2.E+00
Ni-63	4.7E-02	4.5E-10	4.E+01
Cu-64	6.9E+00	6.6E-08	1.E+03
Zn-65	3.2E+02	7.0E-06	1.E+01
Rb-89	2.0E-01	1.9E-09	7.E+03
Sr-89	1.5E+02	9.6E-07	7.E+00
Sr-90	1.0E+00	8.4E-09	2.E-01
Y-90	8.1E-02	7.7E-10	3.E+01
Sr-91	6.7E+00	6.4E-08	2.E+02
Sr-92	4.6E+00	4.4E-08	3.E+02
Y-91	1.7E+00	1.7E-08	7.E+00
Y-92	3.7E+00	3.5E-08	4.E+02
Y-93	7.2E+00	6.9E-08	1.E+02
Zr-95	4.4E+01	1.2E-05	1.E+01
Nb-95	2.4E+02	2.3E-06	7.E+01
Mo-99	1.7E+03	1.6E-05	7.E+01
Tc-99m	2.2E+00	2.1E-08	7.E+03
Ru-103	1.0E+02	9.9E-07	3.E+01
Rh-103m	3.5E-03	3.3E-11	7.E+04
Ru-106	1.4E-01	1.3E-09	7.E-01
Rh-106	4.5E-06	4.3E-14	4.E+01
Ag-110m	1.0E-01	9.9E-10	4.E+00
Sb-124	5.3E+00	1.1E-06	1.E+01
Te-129m	1.6E+00	1.5E-08	1.E+01
Te-131m	5.5E-01	5.2E-09	4.E+01
Te-132	1.4E-01	1.3E-09	3.E+01
Cs-134	1.8E+02	3.8E-05	7.E+00
Cs-136	1.5E+01	1.3E-07	3.E+01

PRELIMINARY

Table 12.2-17

Comparison of Airborne Concentrations with 10 CFR 20 Concentrations

	Airborne Release	Concentration	10 CFR 20
Nuclide	**MBq/yr**	**Bq/m^3**	**Bq/m^3**
Cs-137	2.7E+02	6.2E-05	7.E+00
Cs-138	8.5E-01	8.1E-09	3.E+03
Ba-140	7.8E+02	6.7E-06	7.E+01
La-140	1.3E+01	1.2E-07	7.E+01
Ce-141	2.6E+02	1.8E-06	3.E+01
Ce-144	1.3E-01	1.3E-09	7.E-01
Pr-144	1.6E-04	1.5E-12	7.E+00
W-187	1.3E+00	1.2E-08	4.E+02
Np-239	8.3E-01	7.9E-07	1.E+02

PRELIMINARY

Table 12.2-18a

Airborne Offsite Dose Calculation Bases

Meteorology χ/Q	Table 12.2-15
Meteorology D/Q	Table 12.2-15
Airborne Release Source Term	Table 12.2-16
Calculation Methodology	Regulatory Guide 1.109
Computer Code Utilized	GASPAR II (NUREG/CR-4653)
Individual Consumption Rates	Table E-5 of Reg. Guide 1.109
Misc. Calculation Inputs (other than Reg. Guide 1.109 default values):	
Midpoint of plant operating life	30 years
Fraction of year that leafy vegetables are grown	0.75
Fraction of year that animals graze on pasture	0.5
Fraction of daily feed that is pasture grass when the animal grazes on pasture	0.75
Animal milk considered for milk pathway	Cow
Annual Average Doses from Airborne Releases	Table 12.2-18b

PRELIMINARY

Table 12.2-18b

ESBWR Annual Average Doses from Airborne Releases

	Annual Dose (mSv/year)							
PATHWAY	**T. BODY**	**GI-TRACT**	**BONE**	**LIVER**	**KIDNEY**	**THYROID**	**LUNG**	**SKIN**
PLUME	8.15E-03	8.15E-03	8.15E-03	8.15E-03	8.15E-03	8.15E-03	8.27E-03	1.94E-02
GROUND	2.04E-03	2.04E-03	2.04E-03	2.04E-03	2.04E-03	2.04E-03	2.04E-03	2.38E-03
VEGET								
ADULT	7.07E-04	5.59E-04	1.44E-03	9.25E-04	5.52E-04	2.89E-02	2.36E-04	1.67E-04
TEEN	7.87E-04	6.93E-04	2.32E-03	1.43E-03	8.48E-04	3.73E-02	3.95E-04	2.72E-04
CHILD	1.18E-03	9.40E-04	5.51E-03	2.57E-03	1.56E-03	7.09E-02	8.34E-04	6.50E-04
MEAT								
ADULT	1.07E-04	2.23E-04	3.42E-04	1.26E-04	9.12E-05	5.81E-04	6.78E-05	6.25E-05
TEEN	7.66E-05	1.41E-04	2.88E-04	1.03E-04	7.48E-05	4.28E-04	5.74E-05	5.25E-05
CHILD	1.22E-04	1.45E-04	5.38E-04	1.61E-04	1.25E-04	6.66E-04	1.04E-04	9.82E-05
MILK								
ADULT	3.93E-04	1.44E-04	6.14E-04	5.48E-04	3.15E-04	1.49E-02	1.11E-04	6.96E-05
TEEN	4.77E-04	2.17E-04	1.11E-03	9.59E-04	5.52E-04	2.37E-02	2.10E-04	1.27E-04
CHILD	6.75E-04	3.72E-04	2.69E-03	1.70E-03	9.98E-04	4.71E-02	4.35E-04	3.10E-04
INFANT	1.09E-03	8.88E-04	4.92E-03	3.34E-03	1.75E-03	1.14E-01	8.67E-04	6.43E-04
INHALE								
ADULT	2.62E-05	2.50E-05	2.14E-05	4.24E-05	4.09E-05	2.23E-03	2.17E-04	4.32E-06
TEEN	2.50E-05	2.64E-05	2.97E-05	5.59E-05	5.40E-05	2.92E-03	3.16E-04	4.36E-06
CHILD	1.98E-05	1.69E-05	3.98E-05	5.26E-05	4.95E-05	3.60E-03	2.57E-04	3.85E-06
INFANT	1.15E-05	8.70E-06	2.73E-05	4.16E-05	3.13E-05	3.28E-03	1.66E-04	2.22E-06

PRELIMINARY

Table 12.2-18b

ESBWR Annual Average Doses from Airborne Releases

	Annual Dose (mSv/year)							
PATHWAY	**T. BODY**	**GI-TRACT**	**BONE**	**LIVER**	**KIDNEY**	**THYROID**	**LUNG**	**SKIN**
TOTAL**	**Annual Dose (mSv/year)**							
ADULT	3.27E-03	2.99E-03	4.45E-03	3.68E-03	3.04E-03	4.87E-02	2.67E-03	2.69E-03
TEEN	3.40E-03	3.11E-03	5.78E-03	4.59E-03	3.56E-03	6.64E-02	3.01E-03	2.84E-03
CHILD	4.04E-03	3.51E-03	1.08E-02	6.51E-03	4.77E-03	1.24E-01	3.67E-03	3.45E-03
INFANT	3.14E-03	2.93E-03	6.98E-03	5.42E-03	3.81E-03	1.20E-01	3.07E-03	3.03E-03

Annual beta air dose = 1.14E-02 mGy
Annual gamma air dose = 1.24E-02 mGy

** Total doses correspond to the organ doses from all pathways of exposure (excluding the plume pathway) due to radioactive iodine and radioactive material in particulate form in accordance with 10 CFR 50, Appendix I, Section II.C

PRELIMINARY

Table 12.2-19a

Average Annual Liquid Release Calculation Parameters**

BWR-GALE Card Number	Parameter	Data
1	Name of reactor	GE-ESBWR
	Type	BWR
2	Thermal power level	4500 MWth
3	Total steam flow	1.93E+07 lb/hr
4	Mass of water in reactor vessel	6.74E+05 lb
5	Clean-up demineralizer flow	1.93E+05 lb/hr
6	Condensate demineralizer regenerative time	0 days
7	Cooper tubing for condenser	0 (no)
8	Fraction feed water through condensate demineralizer	1.0
9	High purity waste input	17,173 gal/day
	High purity: Fraction of reactor coolant activity	0.268
10	High purity: Decontamination factor for iodine	1000
	High purity: Decontamination factor for Cs and Rb	100
	High purity: Decontamination factor for others	1000
11	High purity: Collection time	2.958 days
	High purity: Process and discharge time	0.233 days
	High purity: Fraction discharged	0.01
12	Low purity waste input	6,750 gal/day
	Low purity: Fraction of reactor coolant activity	0.001
13	Low purity: Decontamination factor for iodine	10,000
	Low purity: Decontamination factor for Cs and Rb	200
	Low purity: Decontamination factor for others	10,000
14	Low purity: Collection time	9.455 days
	Low purity: Process and discharge time	0.289 days
	Low purity: Fraction discharged	0.1
15	Chemical waste input	793 gal/day
	Chemical: Fraction of reactor coolant activity	0.02
16	Chemical: Decontamination factor for iodine	10,000
	Chemical: Decontamination factor for Cs and Rb	200
	Chemical: Decontamination factor for others	10,000
17	Chemical: Collection time	1.255 days
	Chemical: Process and discharge time	0.289 days
	Chemical: Fraction discharged	0.1
18	Detergent waste input	1,057 gal/day

PRELIMINARY

Table 12.2-19a

Average Annual Liquid Release Calculation Parameters**

BWR-GALE Card Number	Parameter	Data
19	Detergent: Decontamination factor for iodine	1
	Detergent: Decontamination factor for Cs and Rb	1
	Detergent: Decontamination factor for others	1
20	Detergent: Collection time	3.0 days
	Detergent: Process and discharge time	0.25 days
	Detergent: Fraction discharged	0.100
21 to 33	Data only of gaseous releases	0
34	Detergent waste decontamination factor - Laundry	0

** There is no capacity factor input card in the GALE-86 code. A capacity factor of 0.8 is an internal default value. In the liquid effluent release module of the GALE-86 code, a capacity factor of 0.8 is only used for the tritium calculations; specifically, to calculate the tritium discharges via the "processed liquid regenerant waste" stream (and not for other streams). If an ESBWR capacity factor of 0.92 is applied to the GALE-86 code, the tritium discharges would change from 14.47 Ci/yr to 14.65 Ci/yr (note: the GALE-86 code presents the results rounded to the whole number). This change would mean a negligible dose increase for a maximum increase of 1.1% for infant, total body, and 1.2% for infant, lung. This slight increase still maintains the doses due to liquid effluents well below the 10 CFR 50 Appendix I limits.

PRELIMINARY

Table 12.2-19b
Average Annual Liquid Releases

	Annual Release	Concentration	10 CFR 20 MPC
Nuclide	**MBq/yr**	**Bq/ml**	**Bq/ml**
I-131	1.55E+02	1.48E-05	3.70E-02
I-132	3.03E+01	2.88E-06	3.70E+00
I-133	7.77E+02	7.39E-05	2.59E-01
I-134	1.48E+00	1.41E-07	1.48E+01
I-135	2.00E+02	1.90E-05	1.11E+00
H-3	5.18E+05	4.92E-02	3.70E+01
Na-24	1.89E+02	1.79E-05	1.85E+00
P-32	1.55E+01	1.48E-06	3.33E-01
Cr-51	4.81E+02	4.57E-05	1.85E+01
Mn-54	5.92E+00	5.63E-07	1.11E+00
Mn-56	4.81E+01	4.57E-06	2.59E+00
Fe-55	8.51E+01	8.09E-06	3.70E+00
Fe-59	2.59E+00	2.46E-07	3.70E-01
Co-58	1.63E+01	1.55E-06	7.40E-01
Co-60	3.33E+01	3.17E-06	1.11E-01
Cu-64	4.81E+02	4.57E-05	7.40E+00
Zn-65	1.67E+01	1.58E-06	1.85E-01
Zn-69m	3.40E+01	3.24E-06	2.22E+00
Br-83	3.33E+00	3.17E-07	3.33E+01
Sr-89	8.14E+00	7.74E-07	2.96E-01
Sr-90	7.40E-01	7.03E-08	1.85E-02
Sr-91	4.44E+01	4.22E-06	7.40E-01
Y-91	5.18E+00	4.92E-07	2.96E-01
Sr-92	1.07E+01	1.02E-06	1.48E+00
Y-92	4.07E+01	3.87E-06	1.48E+00
Y-93	4.44E+01	4.22E-06	7.40E-01
Zr-95	7.40E-01	7.03E-08	7.40E-01
Nb-95	7.40E-01	7.03E-08	1.11E+00
Mo-99	1.11E+02	1.06E-05	7.40E-01
Tc-99m	2.04E+02	1.93E-05	3.70E+01
Ru-103	1.48E+00	1.41E-07	1.11E+00
Ru-105	6.29E+00	5.98E-07	2.59E+00
Te-129m	3.33E+00	3.17E-07	2.59E-01

PRELIMINARY

Table 12.2-19b

Average Annual Liquid Releases

	Annual Release	Concentration	10 CFR 20 MPC
Nuclide	**MBq/yr**	**Bq/ml**	**Bq/ml**
Te-131m	3.70E+00	3.52E-07	2.96E-01
Te-132	7.40E-01	7.03E-08	3.33E-01
Cs-134	2.52E+01	2.39E-06	3.33E-02
Cs-136	1.52E+01	1.44E-06	2.22E-01
Cs-137	6.66E+01	6.33E-06	3.70E-02
Ba-139	1.48E+00	1.41E-07	7.40E+00
Ba-140	3.03E+01	2.88E-06	2.96E-01
Ce-141	2.59E+00	2.46E-07	1.11E+00
La-142	1.11E+00	1.06E-07	3.70E+00
Ce-143	1.11E+00	1.06E-07	7.40E-01
Pr-143	3.33E+00	3.17E-07	7.40E-01
W-187	8.88E+00	8.44E-07	1.11E+00
Np-239	4.07E+02	3.87E-05	7.40E-01

PRELIMINARY

Table 12.2-20a

Liquid Pathway Offsite Dose Calculation Bases**

Calculation Methodology	Regulatory Guide 1.109
Computer Code Utilized	LADTAP II (NUREG/CR-4013)
Individual Consumption/Exposure Rates	Table E-5 of Reg. Guide 1.109
Site Water Type	Freshwater
Discharge Canal Flow Rate	2.0E+04 liters/min
Shore-Width Factor	0.2
Dilution Factor	10
Transit times from discharge to the receiving water body to exposure location	- All pathways except drinking water: instantaneous - Drinking water: 12 hours - Irrigated foods: instantaneous
Irrigation rate	0.001 m^3/m^2-day
Fraction of year that leafy vegetables are grown	0.75
Fraction of year that animals graze on pasture	0.5
Fraction of daily feed that is pasture grass when the animal grazes on pasture	0.75
Animal milk considered for milk pathway	Cow
Liquid Pathway Offsite Annual Doses	Table 12.2-20b

** There is no capacity factor input card in the GALE-86 code. A capacity factor of 0.8 is an internal default value. In the liquid effluent release module of the GALE-86 code, a capacity factor of 0.8 is only used for the tritium calculations; specifically, to calculate the tritium discharges via the "processed liquid regenerant waste" stream (and not for other streams). If an ESBWR capacity factor of 0.92 is applied to the GALE-86 code, the tritium discharges would change from 14.47 Ci/yr to 14.65 Ci/yr (note: the GALE-86 code presents the results rounded to the whole number). This change would mean a negligible dose increase for a maximum increase of 1.1% for infant, total body, and 1.2% for infant, lung. This slight increase still maintains the doses due to liquid effluents well below the 10 CFR 50 Appendix I limits.

PRELIMINARY

Table 12.2-20b
Liquid Pathway Dose Results in mSv/year

	Annual Doses (mSv/yr)							
PATHWAY	**SKIN**	**BONE**	**LIVER**	**T. BODY**	**THYROID**	**KIDNEY**	**LUNG**	**GI-LLI**
Drinking								
Adult	0.00E+00	3.93E-05	8.50E-05	7.64E-05	8.20E-04	7.36E-05	6.09E-05	9.06E-05
Teenager	0.00E+00	3.66E-05	6.65E-05	5.18E-05	7.08E-04	5.57E-05	4.39E-05	6.58E-05
Child	0.00E+00	1.03E-04	1.31E-04	9.35E-05	1.78E-03	1.08E-04	8.43E-05	1.05E-04
Infant	0.00E+00	1.09E-04	1.46E-04	9.02E-05	2.75E-03	1.09E-04	8.36E-05	9.58E-05
Fish								
Adult	0.00E+00	1.62E-02	2.22E-03	1.48E-03	3.31E-04	4.46E-04	1.37E-04	1.87E-03
Teenager	0.00E+00	1.76E-02	2.34E-03	1.17E-03	3.16E-04	4.56E-04	1.63E-04	1.52E-03
Child	0.00E+00	2.27E-02	2.15E-03	1.05E-03	3.46E-04	3.87E-04	1.29E-04	6.46E-04
Shoreline								
Adult	1.75E-06	1.49E-06	1.49E-06	1.49E-06	1.49E-06	1.49E-06	1.49E-06	1.49E-06
Teenager	9.77E-06	8.35E-06	8.35E-06	8.35E-06	8.35E-06	8.35E-06	8.35E-06	8.35E-06
Child	2.04E-06	1.74E-06	1.74E-06	1.74E-06	1.74E-06	1.74E-06	1.74E-06	1.74E-06
Irrigated Foods:								
Vegetables								
Adult		5.77E-05	8.14E-05	7.01E-05	1.53E-04	5.56E-05	4.58E-05	5.35E-05
Teenager		9.12E-05	1.16E-04	7.78E-05	2.16E-04	7.38E-05	5.91E-05	6.48E-05
Child		2.08E-04	1.91E-04	1.05E-04	4.08E-04	1.18E-04	9.31E-05	9.04E-05
Leafy Vegetables								
Adult		7.69E-06	1.02E-05	8.77E-06	5.03E-05	7.14E-06	5.66E-06	7.44E-06
Teenager		6.63E-06	7.95E-06	5.30E-06	3.99E-05	5.19E-06	3.95E-06	4.93E-06
Child		1.14E-05	9.83E-06	5.41E-06	5.89E-05	6.23E-06	4.67E-06	4.91E-06
Milk								
Adult		1.58E-05	2.77E-05	2.24E-05	1.17E-04	1.76E-05	1.26E-05	1.35E-05
Teenager		2.84E-05	4.34E-05	2.61E-05	1.83E-04	2.57E-05	1.76E-05	1.75E-05
Child		6.81E-05	7.17E-05	3.39E-05	3.63E-04	4.12E-05	2.78E-05	2.52E-05
Meat								
Adult		3.10E-06	6.18E-06	5.35E-06	7.11E-06	4.87E-06	4.16E-06	5.97E-06
Teenager		2.54E-06	4.16E-06	3.08E-06	4.66E-06	3.11E-06	2.58E-06	3.51E-06
Child		4.70E-06	5.20E-06	3.53E-06	6.36E-06	3.79E-06	3.13E-06	3.45E-06
Total								
Adult	**1.75E-06**	**1.63E-02**	**2.43E-03**	**1.66E-03**	**1.48E-03**	**6.06E-04**	**2.68E-04**	**2.04E-03**
Teenager	**9.77E-06**	**1.78E-02**	**2.59E-03**	**1.34E-03**	**1.48E-03**	**6.28E-04**	**2.98E-04**	**1.68E-03**
Child	**2.04E-06**	**2.31E-02**	**2.56E-03**	**1.29E-03**	**2.96E-03**	**6.66E-04**	**3.44E-04**	**8.77E-04**
Infant		**1.09E-04**	**1.46E-04**	**9.02E-05**	**2.75E-03**	**1.09E-04**	**8.36E-05**	**9.58E-05**

PRELIMINARY

Table 12.2-21
N-16 Skyshine Annual Dose

Distance from Site (m)	Annual Dose (mrem/yr)
800	5.93E-04
1000	1.66E-04

PRELIMINARY

Table 12.2-22

Radiation Sources Parameters

Component	Room	Assumed Shielding Source						
		Source Approx Geometry Rt. Cylinder (r, l)		Source Characteristics				Quantity
		Length (m)	Radius (m)	Type	Material	Density (g/cm^3)	Equipment Self-Shielding	
RWCU/SDC (RB)								
Non regenerative Heat Exchanger Tube side	1151/1250 1161/1260	7.00	0.16	Homogeneous	Water	0.967	Steel 2cm thick	Three
Regenerative Heat Exchanger Tube side Shell side	1151/1250 1161/1260	 7.00 7.00	 0.16 0.25	 Homogeneous Homogeneous	 Water Water	 0.836 0.990	Steel 2cm thick	Two
Demineralizer	1251/52/61/62	4.12	0.48	Homogeneous	Resins	0.69	Steel 1cm thick	Four
FAPCS (FB)								
Heat Exchanger	2150/2160	0.96	0.30	Homogeneous	Water	1.00	Steel 2cm thick	Two
Filter / Demineralizer	2251/2261	2.06	1.12	Homogeneous	Resins	0.69	Steel 1cm thick	Two
Backwash Receiving Tank	2102	1.00	0.56	Homogeneous	Water	1.00	Steel 1cm thick	One
OFF-GAS System (TB)								
Steam Jet Air Ejectors	4206/4207			Homogeneous	Offgas	5.95E-05	Steel 1cm thick	Two
Preheater/Recombiner/Condenser	4381/4382	10.45m^3		Homogeneous	Offgas	6.5E-04	Steel 1cm thick	Two
Cooler Condenser	4381/4382	0.12 m^3		Homogeneous	Offgas	1.04E-03	Steel 1cm thick	Two
Dryer		5.81 m^3		Homogeneous	Offgas	1.02E-03	Steel 1cm thick	Two
Guard Bed	4108	1.4	2.1	Homogeneous	Offgas	1.02E-03	Steel 1cm thick	Two
Delay Bed	4108	7.5	1.5	Homogeneous	Offgas	1.02E-03	Steel 1cm thick	Eight
CPS (TB)								
Condensate Demineralizer	42F1A to F1H	0.92	1.75	Homogeneous	Resins	0.69	Steel 2cm thick	Eight
Turbine Condenser (TB)								
Main Condenser Shell Well	4186	 1284 m^3 2136 m^3		 Homogeneous Homogeneous	 Water Water	 7.21E-04 1	 Steel 1cm thick Steel 1cm thick	Three (Bodies)
LWMS (RW)								
Equipment Drain Collection Tank	6103/4/5	140 m^3		Homogeneous	Water	1	Steel 1cm thick	Three
Floor Drain Collection Tank	6150/6160	130 m^3		Homogeneous	Water	1	Steel 1cm thick	Two
Chemical Drain Collection Tank	6201	4 m^3		Homogeneous	Water	1	Steel 1cm thick	One
Detergent Drain Collection Tank	6184	15 m^3		Homogeneous	Water	1	Steel 1cm thick	Two

PRELIMINARY

Table 12.2-22

Radiation Sources Parameters

Component	Room	Assumed Shielding Source						
		Source Approx Geometry Rt. Cylinder (r, l)		Source Characteristics				Quantity
		Length (m)	Radius (m)	Type	Material	Density (g/cm^3)	Equipment Self-Shielding	
Equipment Drain Sample Tank	6172	140 m^3		Homogeneous	Water	1	Steel 1cm thick	Two
Floor Drain Sample Tank	6171	130 m^3		Homogeneous	Water	1	Steel 1cm thick	Two
Detergent Drain Sample Tank	6282	15 m^3		Homogeneous	Water	1	Steel 1cm thick	Two
SWMS (RW)								
High Activity Resin Holdup Tank	6108	3.26	2.00	Homogeneous	Resins	0.69	Steel 1cm thick	One
Low Activity Resin Holdup Tank	6107	0.48	2.00	Homogeneous	Water	0.69	Steel 1cm thick	One
High/Low Activity Phase Separator Room	6151/6161	0.48	2.00	Homogeneous	Water	1.00	Steel 1cm thick	Two
Condensate Resin Holdup Tank	6106	2.70	2.00	Homogeneous	Resins	0.69	Steel 1cm thick	One
Concentrate Waste Tank	6109	3.98	2.00	Homogeneous	Water	1.03	Steel 1cm thick	One

PRELIMINARY

Table 12.2-23a

Parameters and Assumptions Used for Calculating Inside the Building Airborne Radioactivity Concentrations

Parameter/Assumption	Value
Reactor Building outside Containment	
Source Term	Radioisotopes in reactor water and steam. See Section 11.1. Liquid Phase
Leakage Flowrate	3.9E-04 kg/s
Contaminated Volume	1781.5 m^3
Flashing Fraction	0.4
Normal HVAC flowrate	12.6 m^3/s
Fuel Building	
Source Term	Radioisotopes in spent fuel pool: 1% of radioisotopes in reactor water (see section 11.1), except H-3 (100% of section 11.1 value)
Leakage Flowrate	9.4E-02 kg/s
Contaminated Volume	12897 m^3
Flashing Fraction	0.4
Normal HVAC flowrate	14.2 m^3/s
Turbine Building	
Source Term	Radioisotopes in reactor water and steam. See Section 11.1. Steam phase and liquid phase
Leakage Flowrate	0.12 kg/s
Contaminated Volume	93565 m^3
Flashing Fraction	0.4
Carry-over ratio	1 for noble gases 0.02 for iodines 0.001 for other isotopes
Normal HVAC flowrate	47.5 m^3/s
Radwaste Building	
Source Term	Radioisotopes in reactor water and steam See Section 11.1. Liquid Phase
Leakage Flowrate	1.5E-04 kg/s
Contaminated Volume	10447 m^3
Flashing Fraction	0.4
Normal HVAC flowrate	5E-04 /s

PRELIMINARY

Table 12.2-23b
Reactor Building Outside Containment Airborne Radioactivity Concentrations During Normal Operation

Nuclide	Concentration Bq/m^3	10 CFR 20 Bq/m^3
I-131	4.8E+00	7.4E+02
I-132	4.5E+01	1.1E+05
I-133	3.3E+01	3.7E+03
I-134	8.2E+01	7.4E+05
I-135	4.7E+01	2.6E+04
Rb-89	7.7E+00	2.2E+06
Cs-134	5.6E-02	1.5E+03
Cs-136	3.7E-02	1.1E+04
Cs-137	1.5E-01	2.2E+03
Cs-138	1.6E+01	7.4E+05
Ba-137m	9.1E-02	3.7E+03
H-3	4.6E+00	7.4E+05
Na-24	4.0E+00	7.4E+04
P-32	8.2E-02	7.4E+03
Cr-51	6.2E+00	3.0E+05
Mn-54	7.2E-02	1.1E+04
Mn-56	4.7E+01	2.2E+05
Fe-55	2.1E+00	3.0E+04
Fe-59	6.2E-02	3.7E+03
Co-58	2.1E-01	1.1E+04
Co-60	4.1E-01	3.7E+02
Ni-63	2.1E-03	1.1E+04
Cu-64	5.9E+00	3.3E+05
Zn-65	2.1E+00	3.7E+03
Sr-89	2.1E-01	2.2E+03
Sr-90	1.5E-02	7.4E+01
Y-90	1.5E-02	1.1E+04
Sr-91	7.9E+00	3.7E+04
Sr-92	1.8E+01	1.1E+05

PRELIMINARY

Table 12.2-23b

Reactor Building Outside Containment Airborne Radioactivity Concentrations During Normal Operation

Nuclide	Concentration Bq/m^3	10 CFR 20 Bq/m^3
Y-91	8.2E-02	1.9E+03
Y-92	1.1E+01	1.1E+05
Y-93	7.9E+00	3.7E+04
Zr-95	1.6E-02	1.9E+03
Nb-95	1.6E-02	1.9E+04
Mo-99	4.1E+00	2.2E+04
Tc-99m	4.1E+00	2.2E+06
Ru-103	4.1E-02	1.1E+04
Rh-103m	4.0E-02	1.9E+07
Ru-106	6.2E-03	1.9E+02
Rh-106	1.4E-03	3.7E+03
Ag-110m	2.1E-03	1.5E+03
Te-129m	8.2E-02	3.7E+03
Te-131m	2.0E-01	7.4E+03
Te-132	2.0E-02	3.3E+03
Ba-140	8.2E-01	2.2E+04
La-140	8.2E-01	1.9E+04
Ce-141	6.2E-02	7.4E+03
Ce-144	6.2E-03	2.2E+02
Pr-144	5.7E-03	1.9E+06
W-187	6.1E-01	1.5E+05
Np-239	1.6E+01	3.3E+04

PRELIMINARY

Table 12.2-23c
Spent Fuel Pool and Equipment Areas Airborne Radioactivity Concentrations

Nuclide	Concentration Bq/m^3	10 CFR 20 Bq/m^3
I-131	1.0E+01	7.4E+02
I-132	9.0E+01	1.1E+05
I-133	7.0E+01	3.7E+03
I-134	1.5E+02	7.4E+05
I-135	9.7E+01	2.6E+04
Rb-89	1.1E+01	2.2E+06
Cs-134	1.2E-01	1.5E+03
Cs-136	7.9E-02	1.1E+04
Cs-137	3.2E-01	2.2E+03
Cs-138	2.8E+01	7.4E+05
Ba-137m	6.2E-02	3.7E+03
H-3	9.7E+02	7.4E+05
Na-24	8.3E+00	7.4E+04
P-32	1.7E-01	7.4E+03
Cr-51	1.3E+01	3.0E+05
Mn-54	1.5E-01	1.1E+04
Mn-56	9.4E+01	2.2E+05
Fe-55	4.5E+00	3.0E+04
Fe-59	1.3E-01	3.7E+03
Co-58	4.5E-01	1.1E+04
Co-60	8.7E-01	3.7E+02
Ni-63	4.5E-03	1.1E+04
Cu-64	1.2E+01	3.3E+05
Zn-65	4.5E+00	3.7E+03
Sr-89	4.5E-01	2.2E+03
Sr-90	3.2E-02	7.4E+01
Y-90	3.1E-02	1.1E+04
Sr-91	1.7E+01	3.7E+04
Sr-92	3.7E+01	1.1E+05

PRELIMINARY

Table 12.2-23c

Spent Fuel Pool and Equipment Areas Airborne Radioactivity Concentrations

Nuclide	Concentration Bq/m^3	10 CFR 20 Bq/m^3
Y-91	1.7E-01	1.9E+03
Y-92	2.3E+01	1.1E+05
Y-93	1.7E+01	3.7E+04
Zr-95	3.4E-02	1.9E+03
Nb-95	3.4E-02	1.9E+04
Mo-99	8.7E+00	2.2E+04
Tc-99m	8.4E+00	2.2E+06
Ru-103	8.7E-02	1.1E+04
Rh-103m	7.3E-02	1.9E+07
Ru-106	1.3E-02	1.9E+02
Rh-106	6.0E-04	3.7E+03
Ag-110m	4.5E-03	1.5E+03
Te-129m	1.7E-01	3.7E+03
Te-131m	4.2E-01	7.4E+03
Te-132	4.2E-02	3.3E+03
Ba-140	1.7E+00	2.2E+04
La-140	1.7E+00	1.9E+04
Ce-141	1.3E-01	7.4E+03
Ce-144	1.3E-02	2.2E+02
Pr-144	8.2E-03	1.9E+06
W-187	1.3E+00	1.5E+05
Np-239	3.4E+01	3.3E+04

PRELIMINARY

Table 12.2-23d

Turbine Building Airborne Radioactivity Concentrations

Nuclide	Concentration Bq/m^3	10 CFR 20 Bq/m^3
Ar-41	1.7E+03	1.1E+05
Kr-83m	1.1E+02	3.7E+08
Kr-85m	2.1E+02	7.4E+05
Kr-85	9.1E-01	3.7E+06
Kr-87	5.9E+02	1.9E+05
Kr-88	6.7E+02	7.4E+04
Kr-89	5.9E+02	3.7E+03
Xe-131m	7.6E-01	1.5E+07
Xe-133m	1.1E+01	3.7E+06
Xe-133	3.3E+02	3.7E+06
Xe-135m	4.1E+02	3.3E+05
Xe-135	8.5E+02	3.7E+05
Xe-137	8.8E+02	3.7E+03
Xe-138	1.4E+03	1.5E+05
I-131	7.9E+00	7.4E+02
I-132	6.4E+01	1.1E+05
I-133	5.4E+01	3.7E+03
I-134	9.6E+01	7.4E+05
I-135	7.3E+01	2.6E+04
Rb-89	2.8E-01	2.2E+06
Cs-134	4.6E-03	1.5E+03
Cs-136	3.0E-03	1.1E+04
Cs-137	1.2E-02	2.2E+03
Cs-138	8.3E-01	7.4E+05
Ba-137m	1.2E-03	3.7E+03
H-3	3.8E+02	7.4E+05
Na-24	3.2E-01	7.4E+04
P-32	6.7E-03	7.4E+03
Cr-51	5.1E-01	3.0E+05

PRELIMINARY

Table 12.2-23d

Turbine Building Airborne Radioactivity Concentrations

Nuclide	Concentration Bq/m^3	10 CFR 20 Bq/m^3
Mn-54	5.9E-03	1.1E+04
Mn-56	3.4E+00	2.2E+05
Fe-55	1.7E-01	3.0E+04
Fe-59	5.1E-03	3.7E+03
Co-58	1.7E-02	1.1E+04
Co-60	3.3E-02	3.7E+02
Ni-63	1.7E-04	1.1E+04
Cu-64	4.7E-01	3.3E+05
Zn-65	1.7E-01	3.7E+03
Sr-89	1.7E-02	2.2E+03
Sr-90	1.2E-03	7.4E+01
Y-90	1.2E-03	1.1E+04
Sr-91	6.2E-01	3.7E+04
Sr-92	1.3E+00	1.1E+05
Y-91	6.7E-03	1.9E+03
Y-92	8.5E-01	1.1E+05
Y-93	6.3E-01	3.7E+04
Zr-95	1.3E-03	1.9E+03
Nb-95	1.3E-03	1.9E+04
Mo-99	3.3E-01	2.2E+04
Tc-99m	3.1E-01	2.2E+06
Ru-103	3.3E-03	1.1E+04
Rh-103m	2.4E-03	1.9E+07
Ru-106	5.1E-04	1.9E+02
Rh-106	1.1E-05	3.7E+03
Ag-110m	1.7E-04	1.5E+03
Te-129m	6.7E-03	3.7E+03
Te-131m	1.6E-02	7.4E+03
Te-132	1.6E-03	3.3E+03
Ba-140	6.7E-02	2.2E+04
La-140	6.6E-02	1.9E+04
Ce-141	5.1E-03	7.4E+03
Ce-144	5.1E-04	2.2E+02
Pr-144	2.2E-04	1.9E+06

PRELIMINARY

Table 12.2-23d

Turbine Building Airborne Radioactivity Concentrations

Nuclide	Concentration Bq/m^3	10 CFR 20 Bq/m^3
W-187	4.9E-02	1.5E+05
Np-239	1.3E+00	3.3E+04

PRELIMINARY

Table 12.2-23e

Radwaste Building Airborne Radioactivity Concentrations

Nuclide	Concentration Bq/m^3	10 CFR 20 Bq/m^3
I-131	4.3E+00	7.4E+02
I-132	3.5E+01	1.1E+05
I-133	3.0E+01	3.7E+03
I-134	5.3E+01	7.4E+05
I-135	4.0E+01	2.6E+04
Rb-89	3.1E+00	2.2E+06
Cs-134	5.0E-02	1.5E+03
Cs-136	3.3E-02	1.1E+04
Cs-137	1.3E-01	2.2E+03
Cs-138	9.1E+00	7.4E+05
Ba-137m	1.3E-02	3.7E+03
H-3	4.1E+00	7.4E+05
Na-24	3.5E+00	7.4E+04
P-32	7.4E-02	7.4E+03
Cr-51	5.6E+00	3.0E+05
Mn-54	6.5E-02	1.1E+04
Mn-56	3.7E+01	2.2E+05
Fe-55	1.9E+00	3.0E+04
Fe-59	5.6E-02	3.7E+03
Co-58	1.9E-01	1.1E+04
Co-60	3.7E-01	3.7E+02
Ni-63	1.9E-03	1.1E+04
Cu-64	5.2E+00	3.3E+05
Zn-65	1.9E+00	3.7E+03
Sr-89	1.9E-01	2.2E+03
Sr-90	1.3E-02	7.4E+01
Y-90	1.3E-02	1.1E+04
Sr-91	6.9E+00	3.7E+04
Sr-92	1.5E+01	1.1E+05
Y-91	7.4E-02	1.9E+03

PRELIMINARY

Table 12.2-23e

Radwaste Building Airborne Radioactivity Concentrations

Nuclide	Concentration Bq/m^3	10 CFR 20 Bq/m^3
Y-92	9.4E+00	1.1E+05
Y-93	6.9E+00	3.7E+04
Zr-95	1.5E-02	1.9E+03
Nb-95	1.5E-02	1.9E+04
Mo-99	3.7E+00	2.2E+04
Tc-99m	3.5E+00	2.2E+06
Ru-103	3.7E-02	1.1E+04
Rh-103m	2.6E-02	1.9E+07
Ru-106	5.6E-03	1.9E+02
Rh-106	1.2E-04	3.7E+03
Ag-110m	1.9E-03	1.5E+03
Te-129m	7.4E-02	3.7E+03
Te-131m	1.8E-01	7.4E+03
Te-132	1.8E-02	3.3E+03
Ba-140	7.4E-01	2.2E+04
La-140	7.3E-01	1.9E+04
Ce-141	5.6E-02	7.4E+03
Ce-144	5.6E-03	2.2E+02
Pr-144	2.4E-03	1.9E+06
W-187	5.4E-01	1.5E+05
Np-239	1.4E+01	3.3E+04

PRELIMINARY

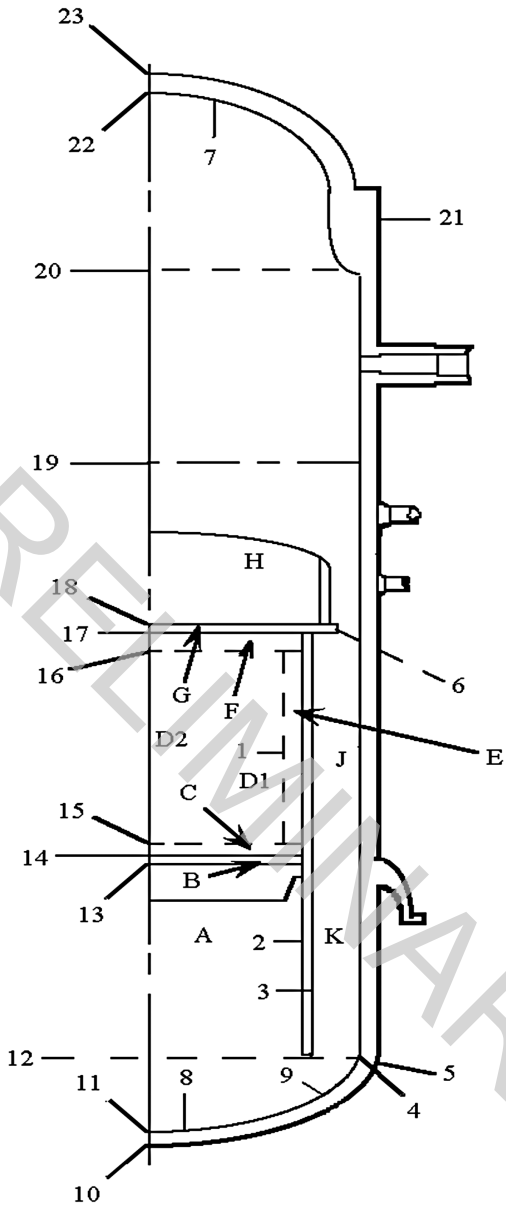

Note: See Table 12.2-1 for component designations.

Figure 12.2-1. Radiation Source Model

12.3 RADIATION PROTECTION

12.3.1 Facility Design Features

The ESBWR Standard Plant is designed in accordance with Regulatory Guide 8.8 (Reference 12.3-11), to keep radiation exposures to plant personnel ALARA. This subsection describes the component and system designs in addition to the equipment layout employed to maintain radiation exposures ALARA. Consideration of individual systems is provided to illustrate the application of these principles. The details in this subsection serve as input to the final design configuration and serve to determine the adequacy of the design with respect to radiation protection. Compliance to NUREG-0800 radiation protection acceptance criteria (Reference 12.3-15) for the specific systems, structures, and components (SSCs) are further described in the applicable sections of the DCD.

Material selection for primary coolant piping, tubing, vessel internal surfaces, and other components in contact with the primary coolant is discussed below.

Carbon steel is used in a large portion of the system piping and equipment outside of the nuclear steam supply system. Carbon steel is typically low in nickel content and contains a very small amount of cobalt impurity.

Stainless steel is used in portions of the system, such as the reactor internal components and heat exchanger tubes, where high corrosion resistance is required. The nickel content of the stainless steels is in the 9 to 10.5% range and is controlled in accordance with applicable ASME material specifications. Cobalt content is controlled to less than 0.05% in the XM-19 alloy used in the control rod drives. A previous review of materials certifications indicated average cobalt content of only 0.15% in austenitic stainless steels.

Ni-Cr-Fe alloys such as Inconel 600 and Inconel X750, which have high nickel content, are used in some reactor vessel internal components. These materials are used in applications where special requirements (possessing specific thermal expansion characteristics along with adequate corrosion resistance) are necessary, and where no suitable alternative low-nickel material is available. Cobalt content in the Inconel X750 used in the fuel assemblies is limited to 0.05%.

Stellite is used for hard facing of components that must be extremely wear resistant. Use of high cobalt alloys such as Stellite is restricted to those applications where no satisfactory alternative material is available. An alternative material (Colmonoy) has been used for some hard facings in the core area.

Main condenser tubes and tube sheets are made of stainless steel or titanium alloys to minimize the introduction of foreign material into the reactor system as a result of condenser tube leakage.

12.3.1.1 Equipment Design for Maintaining Exposure ALARA

This subsection describes specific components as well as system design features that aid in maintaining the exposure of plant personnel during system operation and maintenance ALARA. Equipment layouts to provide ALARA exposures of plant personnel are discussed in Subsection 12.3.1.2.

PRELIMINARY

12.3.1.1.1 Pumps

Pumps located in radiation areas are designed to minimize the time required for maintenance. Quick-change cartridge-type seals on pumps, and pumps with back pullout features that permit removal of the pump impeller or mechanical seals without disassembly of attached piping are employed to minimize exposure time during pump maintenance. The configuration of piping about pumps is designed to provide sufficient space for efficient pump maintenance. Toward this end, systems that contain pumps generally have the pumps in a separate alcove with piping routed to the back of the alcove into shielded pipe chases. Provisions are made for flushing and in certain cases chemically cleaning pumps prior to maintenance. Pump casing drains provide a means for draining pumps to the sumps prior to disassembly, thus reducing the exposure of personnel and decreasing the potential for contamination. Where two or more pumps conveying highly radioactive fluids are required for operational reasons to be located adjacent to each other, shielding is provided between the pumps to maintain exposure levels ALARA. Pumps adjacent to other highly radioactive equipment are also shielded to reduce the maintenance exposure (such as, the radwaste system).

Whenever possible, operation of the pumps and associated valves for radioactive systems is accomplished remotely through reach rods or electric controls. Pump control instrumentation is located outside high radiation areas in separate alcoves, and motor- or pneumatic-operated valves and valve extension stems are employed to allow operation from these areas.

12.3.1.1.2 Instrumentation

Instruments are located in low radiation areas such as shielded valve galleries, corridors, or control rooms, whenever possible. Shielded valve galleries provided for this purpose include those for the RWCU/SDC System, FAPCS, and radwaste (cleanup phase separator and spent resin tank) systems. Instruments that are required to be located in high radiation areas due to operations requirements are designed such that removal of these instruments to low radiation areas for maintenance is possible. Sensing lines are routed from taps on the primary system in order to avoid placing the transmitters or readout devices in high radiation areas. For example, reactor water level sensing instruments are located outside the drywell.

Liquid service equipment for systems containing radioactive fluids is provided with vent and backflush provisions. Instrument lines, except those for the reactor vessel, are designed with provisions for backflushing and maintaining a clean fill in the sensing lines. The reactor vessel sensing lines may be flushed with condensate following reactor blowdown.

12.3.1.1.3 Heat Exchangers

Heat exchangers are constructed of stainless steel or Cu/Ni tubes to minimize the possibility of failure and reduce maintenance requirements. The heat exchanger design allows for the complete drainage of fluids from the exchanger, avoiding pooling effects that could lead to radioactive crud deposition. Connections are available for condensate or demineralized water flushing of the heat exchangers. For the RWCU/SDC System, separate connections are also provided for introducing chemical cleaning solutions for decontaminating the heat exchangers. The fuel pool heat exchanger is downstream of the filter/demineralizer and is not subjected to flows containing significant amounts of fission or activation products.

PRELIMINARY

Instrumentation and valves are remotely operable to the maximum extent possible in the shielded heat exchanger cubicles, to reduce the need for entering these high radiation areas.

12.3.1.1.4 Valves

Valve packing and gasket material are selected on a conservative basis, accounting for environmental conditions such as temperature, pressure, and radiation tolerance requirements to provide a long operating life. Valves back seats minimize leakage through the packing. Straight-through valve configurations were selected where practical, over those that exhibit flow discontinuities or internal crevices to minimize crud trapping. Teflon gaskets are not used.

Wherever possible, valves in systems containing radioactive fluids are separated from those for "clean" services to reduce the radiation exposure from adjacent valves and piping during maintenance.

Pneumatic or mechanically operated valves are employed in high radiation areas, whenever practical, to minimize the need for entering these areas. For certain situations, manually operated valves are required, and in such cases extension valve stems are provided which are operated from a shielded area. Flushing and drain provisions are employed in radioactive systems to reduce exposure to personnel during maintenance.

For areas in which especially high radiation levels are encountered, valves are reduced to the maximum extent possible with the bulk of the valve and piping located in an adjacent valve gallery where the radiation levels are lower.

12.3.1.1.5 Piping

Piping was selected to provide a service life equivalent to the design life of the plant, with consideration given to corrosion allowances and environmental conditions. Piping in radioactive systems such as the RWCU/SDC System has butt-welded connections, rather than socket welds, to reduce crud traps. Distinction is made between piping conveying radioactive and non radioactive fluids, and separate routing through shielded pipe chases is provided whenever possible. Piping conveying highly contaminated fluids is usually routed through shielded pipe chases and shielded cubicles. However, when these options are not feasible, the radioactive piping is embedded in concrete walls and floors.

12.3.1.1.6 Lighting

Lighting is designed to provide sufficient illumination in radiation areas to allow quick and efficient surveillance and maintenance operations. To reduce the need for immediate replacement of defective bulbs, multiple lighting fixtures are provided in shielded cubicles. Incandescent lamps are the only type of lamp used within the primary containment, the main steam tunnel, and the refueling level of the reactor building. They require less time for servicing and, hence, the personnel exposure is reduced. Consideration is also given to locating lighting fixtures in easily accessible locations, thus reducing the exposure time for bulb replacement.

12.3.1.1.7 Floor Drains

Floor drains with appropriately sloped floors are provided in shielded cubicles where the potential for spills exist. Those drain lines having a potential for containing highly radioactive fluids are routed through pipe chases, shielded cubicles, or are embedded in concrete walls and

PRELIMINARY

floors. Smooth epoxy-type coatings are employed to facilitate decontamination when a spill does occur.

12.3.1.1.8 Ventilation

The RB Contaminated Area HVAC Subsystem (CONAVS) supplies air to the containment during reactor shutdown for personnel access to the containment area. During normal operation, the preheated outside air travels through the Air Handling Units (AHU) where particulates are removed from the air by filters; heat is transferred between the air and the chilled water coils; and the conditioned air is distributed to the controlled areas by the supply fan.

The exhaust subsystem consists of redundant exhaust fans connected to common collection and discharge duct systems. During normal operation, the operating fan exhausts air from the controlled areas directly to the atmosphere through the RB/FB stack. During purge operation, the operating purge fan exhausts air from the containment area through the purge exhaust filter unit prior to discharge to the RB/FB stack.

The RB Refueling and Pool Area HVAC Subsystem (REPAVS) is a once-through ventilation system that distributes conditioned air to the refueling area of the reactor building SFP area. During normal operation, outside air travels through the AHU's stages where particulates are removed from the air by filters; heat is transferred between the air and the chilled water coils; and the conditioned air is distributed to the refueling area and SFP surfaces. Air is ducted to the exhaust fan and exhausted to the outside atmosphere through the RB/FB stack. The exhaust system has the manual capability to divert the exhaust for filtration by the purge exhaust filter unit, prior to discharge to the RB/FB stack.

The Fuel Building Fuel Pool Ventilation Subsystem (FBFPVS) and Fuel Building General Area Ventilation Subsystem (FBGAVS) are once-through ventilation systems that distribute conditioned air to the respective general area and SFP area of the FB. During normal operation, outside air travels through the AHU's stages that contain filters, heating elements and chilled water cooling coils. The conditioned air is distributed to the FB general areas and SFP surfaces. Air is ducted to the individual subsystem exhaust fans and exhausted to the outside atmosphere through the RB/FB ventilation stack. The exhaust subsystems have the manual capability of diverting a portion of exhaust for filtration by the exhaust filter unit, prior to discharge to the ventilation stack.

12.3.1.2 Plant Design for Maintaining Exposure ALARA

This subsection describes features of equipment layout and design that are employed to maintain personnel exposures ALARA.

12.3.1.2.1 Penetrations

Penetrations through shield walls are avoided whenever possible to reduce the number of streaming paths provided by these penetrations. Whenever penetrations are required through shield walls, however, they are located to minimize the effect on surrounding areas. Penetrations are located so that the radiation source cannot "see" through the penetration. When this is not possible, or to provide an added order of reduction, penetrations are located to exit far above floor level in open corridors or in other relatively inaccessible areas. Penetrations that are offset

PRELIMINARY

through a shield wall are frequently employed for electrical penetrations to reduce the streaming of radiation through these penetrations.

Where permitted, the annular region between pipe and penetration sleeves, as well as electrical penetrations, are filled with shielding material to reduce the streaming area presented by these penetrations. The shielding materials used in these applications include lead-loaded silicone foam, with a density comparable to concrete, and boron-loaded refractory-type material for applications requiring neutron as well as gamma shielding. There are certain penetrations where these two approaches are not feasible or are not sufficiently effective. In those cases, a shielded enclosure about the penetration as it exits in the shield wall, with a 90-degree bend of the process pipe as it exits the penetration, is employed.

12.3.1.2.2 Sample Stations

Sample stations in the plant provide for the routine surveillance of reactor water quality. These sample stations are located in low radiation areas to reduce the exposure to operating personnel. Flushing provisions are included using demineralized water, and pipe drains to plant sumps are provided to minimize the possibility of spills. Fume hoods are employed for airborne contamination control. Both working areas and fume hoods are constructed of polished stainless steel to ease decontamination if a spill does occur. Grab spouts are located above the sink to reduce the possibility of contaminating surrounding areas during the sampling process.

12.3.1.2.3 HVAC Systems

Major HVAC equipment (e.g., blowers, coolers) is located in dedicated low radiation areas to minimize exposures to personnel maintaining this equipment. HVAC ducting is routed outside pipe chases and does not penetrate pipe chase walls, which could compromise the shielding. HVAC ducting penetrations through walls of shielded cubicles are located to minimize the effect of the streaming radiation levels in adjoining areas. Additional HVAC design considerations are addressed in Subsection 12.3.3.

12.3.1.2.4 Piping

Piping containing radioactive fluids is routed through shielded pipe chases, shielded equipment cubicles, or embedded in concrete walls and floors, whenever possible. "Clean" services, such as compressed air and demineralized water, are not routed through shielded pipe chases, where possible. For situations in which radioactive piping must be routed through corridors or other low radiation areas, an analysis is conducted to ensure this routing does not compromise the existing radiation zoning.

Some piping may be embedded in concrete (e.g., feed-throughs with short sections). Optimization by short sections with embedded piping to the extent practicable facilitates the dismantlement of the systems and the decommissioning of the facility, as required by 10 CFR 20.1406.

Radioactive services are routed separately from piping containing nonradioactive fluids, whenever possible, to minimize the exposure to personnel during maintenance. When such routing combinations are required, drain provisions are provided to remove the radioactive fluid contained in equipment and piping. In such situations, provisions are made for the valves required for process operations to be controlled remotely, without need for entering the cubicle.

PRELIMINARY

The radwaste piping gallery between the TB and the RW contains only nonsafety-related electrical cables that are separated from the radwaste piping by a 20 cm shield wall. Cable replacement, though infrequent, is to be performed during shutdown or when no waste transfer operations are occurring in accordance with plant maintenance and radiation protection program procedures that take into account ALARA objectives. During normal operation, the 20 cm concrete shielding minimizes the potential dose to electrical equipment during waste transfer operations.

"Clean" services and radioactive piping are required at times to be routed together in shielded cubicles. In such situations, provisions are made for the valves required for process operations to be controlled remotely, without need for entering the cubicle.

Penetrations for piping through shield walls are designed to minimize the effect on surrounding areas. Approaches used to accomplish this objective are described in Subsection 12.3.1.2.1.

Piping configurations are designed to minimize the number of "dead legs" and low points in piping runs to avoid accumulation of radioactive crud and fluids in the line. Drains and flushing provisions are employed whenever feasible to reduce the effect of required "dead legs" and low points. Systems containing radioactive fluids are welded to the most practical extent to reduce leakage through flanged or screwed connections. For highly radioactive systems, butt welds are employed to minimize crud traps. Provisions are also made in radioactive systems for flushing with condensate or chemically cleaning the piping to reduce crud buildup.

12.3.1.2.5 Equipment Layout

Equipment layout is designed to reduce the exposure of personnel required to inspect or maintain equipment. "Clean" pieces of equipment are located separately from those which are sources of radiation whenever possible. For systems that have components that are major sources of radiation, piping and pumps are located in separate cubicles to reduce exposure from these components during maintenance. These major radiation sources are also separately shielded from each other.

12.3.1.2.6 Contamination Control

Contaminated piping systems are welded to the most practical extent to minimize leaks through screwed or flanged fittings. For systems containing highly radioactive fluids, drains are hard piped directly to equipment drain sumps, rather than to allow contaminated fluid to flow across the floor to a floor drain. Certain valves in the main steam line are also provided with leakage drains piped to equipment drain sumps to reduce contamination of the steam tunnel. Pump casing drains are employed on radioactive systems whenever possible to remove fluids from the pump prior to disassembly. In addition, provisions for flushing with condensate, and in especially contaminated systems, for chemically cleaning the equipment prior to maintenance, are provided.

The HVAC System is designed to limit the extent of airborne contamination by providing air-flow patterns from areas of low contamination to more contaminated areas. This, in general, is accomplished by creating negative pressure areas in contaminated cubicles, thus keeping air flow into each cubicle from the corridor area. From these exhaust trunks the exhaust flow is discharged to the RB/FB stack. Penetrations through outer walls of the building containing radiation sources are sealed to prevent miscellaneous leaks into the environment. The equipment

PRELIMINARY

drain sump vents that contain airborne contaminants from discharges to the sump are piped directly to their respective building HVAC System. Wet transfer of both the steam dryer and separator also reduces the likelihood of contaminants on this equipment being released into the plant atmosphere. In areas where the reduction of airborne contaminants cannot be eliminated efficiently by HVAC Systems, breathing air provisions are provided, for example, for CRD removal under the reactor pressure vessel and in the CRD maintenance room.

Appropriately sloped floor drains are provided in shielded cubicles and other areas where the potential for a spill exists to limit the extent of contamination. Curbs are also provided to limit contamination and simplify washdown operations. A cask decontamination vault is located in the reactor building where the spent fuel cask and other equipment may be cleaned. The CRD maintenance room is used for disassembling control rod drives to reduce the contamination potential.

Consideration is given in the design of the plant for reducing the effort required for decontamination. Epoxy-type wall and floor coverings have been selected which provide smooth surfaces to ease decontamination. Expanded metal-type floor gratings are minimized in favor of smooth surfaces in areas where radioactive spills could occur. Equipment and floor drain sumps are stainless steel lined to reduce crud buildup and to provide surfaces easily decontaminated.

The RW is seismically designed in accordance with Regulatory Guide 1.143, Class RW-IIa. The tank cubicle concrete is provided with a sealant and a tank cubicle steel liner, as described in Subsection 11.2.2.3 to prevent any potential water releases from high activity areas to the environment. The main equipment washed down in the washdown bays is the spent fuel cask and its transporter. The spent fuel cask is decontaminated in the cask pit (room 21P2). After the spent fuel cask is loaded on the transporter, potential surface contamination is monitored and decontaminated in the washdown bays. Other equipment leaving the plant is also decontaminated inside the plant before loaded onto the transporter, monitored, and washed down if required in the washdown bays before leaving the FB.

The washdown bays include the following design features to minimize the spread of contamination:

- Walls or curbs located around areas of potential contaminated fluid leakage;
- Floor surfaces sloped to drains, and sumps sized for cleanup water flow rate;
- Concrete surfaces, including floor surfaces, which have the potential of being flooded or sprayed with radioactive liquid, are protected with a non-porous coating. Epoxy-type wall and floor coverings provide smooth surfaces for ease of decontamination; and
- The decontamination fluid is processed through the liquid radwaste system as necessary, per plant operating procedures.

The washdown bays are secured for use as per Regulatory Guide 8.8 guidance.

12.3.1.3 Radiation Zoning

Radiation zones are established in all areas of the plant as a function of both the access requirements of that area and the radiation sources in that area. Operating activities, inspection requirements of equipment, maintenance activities, and abnormal operating conditions are

PRELIMINARY

considered in determining the appropriate zoning for a given area. The relationship between radiation zone designations and accessibility requirements is presented in the following tabulation:

Zone Designation	Dose Rate µSv/hr	Access Description
A	D≤ 6 µSv/hr	Uncontrolled, unlimited access
B	6 µSv/hr <D≤ 10 µSv/hr	Controlled and unlimited access. (No or very low radiation sources are present)
C	10 µSv/hr<D ≤ 50 µSv/hr	Controlled and limited access (20 hr/wk). (Low radiation sources are present)
D	50 µSv/hr <D ≤ 250 µSv/hr	Controlled and limited access (4 hr/wk). (Low to moderate radiation sources are present)
E	250 µSv/hr <D ≤ 1 mSv/hr	Controlled and limited access (1 hr/wk). (Moderate radiation sources are present)
F	1 mSv/hr <D ≤ 10 mSv/hr	Limited and controlled access with special authorization permit required. (High radiation sources are present)
G	10 mSv/hr <D ≤ 100 mSv/hr	(Same as zone F above)
H	100mSv/hr<D≤ 1 Sv/hr	(Same as zone F above)
I	1 Sv/hr <D≤ 5 Sv/hr	(Same as zone F above)
J	D > 5 Sv/hr	Inaccessible during power and shutdown operations. (Very High radiation sources are present)

The dose rate applicable for a particular zone is based on operating experience and represents design dose rates in a particular zone. They should not be interpreted as the expected dose rates which would apply in all portions of that zone, or for all types of work within that zone, or at all periods of entry into the zone. Large BWR plants have been in operation for three decades, and operating experience with similar design basis numbers shows that only a small fraction of the 10 CFR 20 maximum permissible dose is received from radiation sources controlled by equipment layout or the structural shielding provided. Therefore, on a practical basis, a radiation zoning approach as described above accomplishes the ALARA objectives for doses as required by 10 CFR 20 Subpart C. The radiation zone maps for this plant, with zone designations as described in the preceding tabulations, are contained in Figures 12.3-1 through 12.3-22b.

Access to areas in the plant is controlled and regulated by the zoning of a given area. Areas with dose rates such that an individual would receive a dose in excess of 1000 µSv (100 mrem) in a period of one hour are locked and posted with "High Radiation Area" signs. Areas in which an individual would receive a dose in excess of 5 Gy (500 rads) within a period of one hour at 1 meter from a radiation source or 1 meter from any surface that the radiation penetrates are posted with "Very High Radiation Area" signs. Controlled access to these areas is provided in accordance with the Radiation Protection Program that is provided by the COL Applicant (see Subsection 12.5.3 and COL Applicant action item 12.5-3-A).

PRELIMINARY

12.3.1.4 Implementation of ALARA

In this subsection, the implementation of design considerations to radioactive systems for maintaining personnel radiation exposures ALARA is described for the RWCU/SDC System, Main Steam, FAPCS, Inclined Fuel Transfer System (IFTS), and systems located in the RW.

12.3.1.4.1 Reactor Water Cleanup / Shutdown Cooling System

This system is designed to operate continuously to reduce reactor water radioactive contamination, as well as perform shutdown cooling. Components for this system are located outside the containment and include demineralizers, regenerative (RHX) and nonregenerative (NRHX) heat exchangers, pumps, and associated valves.

The highest radiation level components include the demineralizers and heat exchangers. The demineralizers are located in separate concrete-shielded cubicles that are accessible through shielded hatches. The demineralizer rooms in the RB are identified in Figure 12.3-72. The radiation source term associated with the demineralizers is provided in Table 12.2-7. Adjacent rooms to the demineralizers are identified in Figures 12.3-71 through 12.3-73. Valves and piping within the cubicles are reduced to the extent that entry into the cubicles is not required during any operational phase. Most of the valves and piping are located in a shielded valve gallery adjacent to the demineralizer cubicles. The valves are remotely operable to the greatest practical extent to minimize entry requirements into this area. The RWCU/SDC heat exchangers are also located in a shielded cubicle with valves operated remotely by use of extension valve stems, or from instrument panels located outside the cubicle. The backwash tank is shielded separately from the resin transfer pump, permitting maintenance of the pump without being exposed to the spent resins contained in the backwash tank. The resin transfer pump valves are operated remotely from outside the cubicle.

The RWCU/SDC System is provided with chemical cleaning and decontamination connections that can utilize the condensate system to flush piping and equipment prior to maintenance to provide decontamination of pumps, the shell side of the RHX, and the tube side of both the RHX and NRHX. The RWCU/SDC System demineralizer can be remotely back-flushed to remove spent resins. If additional decontamination is required, chemical addition connections are provided in the piping to clean piping as well as equipment prior to maintenance. The HVAC System is designed to limit the spread of contaminants from these shielded cubicles by maintaining a negative pressure in the cubicles relative to the surrounding areas.

Personnel access to the cubicles for maintenance of these components is on a controlled basis, where specific restrictions and controls are implemented to minimize personnel exposure.

12.3.1.4.2 Fuel and Auxiliary Pools Cooling System

This system is designed to operate continuously to handle the spent fuel cooling load and to reduce pool water radioactive contamination in all the major pools in the ESBWR. The system components are located in the fuel and reactor building. Included are two independent filter demineralizer units that serve to remove radioactive contamination from the fuel pool and suppression water during cleanup and Low Pressure Coolant Injection (LPCI) mode. These units are the highest radiation level components in the system. Each unit is located in a concrete-shielded cubicle that is accessible through a shielded hatch. The demineralizer rooms in the FB are identified in Figure 12.3-72. The radiation source term associated with the FAPCS

demineralizers is provided in Table 12.2-8a. Adjacent rooms to the demineralizers are identified in Figures 12.3-71 through 12.3-73. Provisions are made for remotely backflushing the units when filter and resin material are spent. This removal of radioactivity from contaminated material reduces the component radiation level considerably and serves to minimize exposures during maintenance. All valves (inlet, outlet, recycle, vent, and drain) to the filter demineralizer units are located outside the shielded cubicles in a separate shielded cubicle together with associated piping, headers, and instrumentation. The radiation level in this cubicle is sufficiently low to permit required maintenance to be performed. Piping potentially containing resin is continuously sloped downward to the backwash tank. The system also includes two low radiation level heat exchangers and two circulation pumps.

All of the shielded system components are consolidated in the same section of the RB. Personnel access to shielded system components is controlled to minimize personnel exposure. Shielding for the components is designed to reduce the radiation level to less than 10 μSv/hr (1 mrem/hr) in adjacent areas where normal access is permitted.

Operation of the system is accomplished from the main control room (MCR) and local control panels which are located where design radiation levels are less than 25 μSv/hr (2.5 mrem/hr) and normal personnel access is permitted.

12.3.1.4.3 Main Steam System

All radioactive materials in the main steam system, located in the main steam-feedwater pipe tunnel of the RB, result from radioactive sources carried over from the reactor during plant operation, including high energy short-lived N-16. During plant shutdown, residual radioactivity from prior plant operation is the radiation source.

Access to the main steam pipe tunnel in the RB is controlled. Entry into the reactor building steam tunnel is through a controlled personnel access door shielded by a concrete labyrinth to attenuate radiation streaming from the steam lines to adjoining areas. During reactor operation, the steam tunnel is not accessible except in the hot standby conditions under controlled access.

Providing valve drains that are piped to equipment drain sumps minimizes leakage from selected valves into surrounding areas. Floor drains are provided to minimize the spread of contamination should a leakage occur.

Penetrations through the steam tunnel walls are minimized to reduce the streaming paths made available by these penetrations. Penetrations through the steam tunnel walls are located so as to exit in controlled access areas or in areas that are not aligned with the steam lines. A lead-loaded silicone foam is employed whenever possible for these penetrations to reduce the available streaming area presented.

12.3.1.4.4 Inclined Fuel Transfer System (IFTS)

The inclined fuel transfer tube transits, through a shielded tube, 21P1, and rooms 18P2 and 1702, with no connection to any other room or area that could be potentially accessible during fuel transfer operations (Figure 9.1-2). Accessible areas and rooms adjacent to the inclined fuel transfer tube are shielded with radiation levels lower than 1 Sv per hour as shown on Figures 12.3-1 through 12.3-8.

Access from any area adjacent to the transfer tube is controlled through a system of physical controls, interlocks and an annunciator.

During IFTS operation or shutdown, personnel are prevented from (a) reactivating the IFTS while personnel are in a controlled maintenance area, or (b) entering a controlled IFTS maintenance area while irradiated fuel or components are in any part of the IFTS.

An audible alarm and flashing red lights are provided inside and outside any IFTS maintenance area indicating IFTS operation.

Radiation monitors with alarms are provided both inside and outside any maintenance area.

A keylock system in both the IFTS main operation panel and in the control room is provided to allow access to any IFTS maintenance area.

12.3.1.4.5 Radwaste Building

Liquid and solid radioactive wastes generated during normal plant operations are transferred to the RW for collection, holdup, and processing by the Liquid Radioactive Waste Management System (LWMS) and the Solid Radioactive Waste Management System (SWMS). These systems are comprised of tanks, transfer pumps, piping, and other components located in shielded cubicles as shown in Figures 12.3-19 through 12.3-22. The radiation source terms associated with permanently installed RW components are provided in Tables 12.2-13a through g, and 12.2-14a through e. Shielding characteristics associated with radwaste building cubical walls are provided in Table 12.3-8. Design features to minimize occupational exposure include:

- Arrangement and location of systems, equipment, and components with different radiation levels or access requirements in different enclosures;
- Design of equipment with adequate finish or linings to prevent formation and adherence of corrosion products to facilitate decontamination;
- Location of instruments requiring calibration in a central station outside of equipment cells;
- Arrangement of shield wall penetrations to avoid direct exposure to normally occupied areas;
- Piping design to minimize crud traps and plateout (there are no socket welds in contaminated piping systems);
- Provision for remote pipe and equipment flushing;
- Utilization of remote viewing and handling equipment as appropriate;
- A centralized sampling station to minimize exposure time; and
- LWMS and SWMS tanks vent to RB ventilation system.

Provisions are made for remote operation of many routine radioactive waste management system functions from the RW control room. These provisions include connections in the process area with remote actuated valves for controlling process flow between process stations and permanently installed equipment. The radwaste building control room is located away from high activity sources. Permanently installed cubical walls provide shielding sufficient to maintain a

PRELIMINARY

general area radiation level inside the control room below 10 μSv/hr. Cubical walls surrounding installed radioactive waste tanks and components are also designed to reduce the radiation level to less than 10 μSv/hr in areas where routine worker access is required.

LWMS and SWMS process systems are located in the RW process systems area, as shown in Figures 12.3-21 and 12.3-41. LWMS and SWMS process systems are described in DCD Section 11.2 and 11.4, respectively. Radiation levels in the radwaste building process systems area shown in Figure 12.3-21 will vary based on site-specific processing technology and process control considerations. LWMS and SWMS process subsystems include modular shielding and controls sufficient to limit accessible general area radiation levels to less than 10 mSv/hr during normal processing. Radiation levels are limited to permit infrequent operator access to perform activities such as component flushing or sampling. Transient radiation levels during filter media or waste container transfer operations may exceed these levels, but radwaste building and process system provisions for remote operation limit average worker radiation dose rates to less than 150 μSv/hr during these operations.

The radwaste building process systems area is designed to accommodate modular shield walls to further limit access and reduce radiation levels from waste processing equipment.

Dry active waste (DAW) sorting, processing, and packaging operations are also performed in the radwaste building. These operations rely on portable radiation detectors, portable shielding, and remote handling tools when appropriate to reduce radiation levels and occupational exposure.

12.3.1.5 Minimization of Contamination and Radioactive Waste Generation

The ESBWR design features and operational programs that aid in the minimization of contamination of the facility and environment, facilitate decommissioning, and aid in the minimization of the generation of radioactive waste in compliance with Title 10, Section 20.1406, "Minimization of Contamination," of the Code of Federal Regulations (10 CFR 20.1406) (Reference 12.3-19) are discussed in this section.

Design concepts associated with Regulatory Position C.1 through C.4 of Regulatory Guide 4.21 (Reference 12.3-20) are addressed in this section. The COL Applicant will describe operational procedures and program concepts associated with the Regulatory Position. A summary of the relevant design and operational concepts from the Regulatory Position are described in the following subsections.

12.3.1.5.1 Design Considerations

The following design objectives summarize the objectives contained in Regulatory Position C.1 through C.4 of Regulatory Guide 4.21:

- Objective 1 - Minimize leaks and spills and provide containment in areas where such events might occur.
- Objective 2 - Provide adequate leak detection capability to provide prompt detection of leakage from any structure, system, or component that has the potential for leakage.
- Objective 3 - Use leak detection methods (e.g., instrumentation, automated samplers) capable of early detection of leaks in areas where it is difficult (inaccessible) to conduct

regular inspections (such as spent fuel pools, tanks that are in contact with the ground, and buried, embedded, or subterranean piping) to avoid release of contamination.

- Objective 4 - Reduce the need to decontaminate equipment and structures by decreasing the probability of any release, reducing any amounts released, and decreasing the spread of the contaminant from the source.
- Objective 5 - Facilitate decommissioning by (1) minimizing embedded and buried piping, and (2) designing the facility to facilitate the removal of any equipment or components that may require removal or replacement during facility operation or decommissioning.
- Objective 6 - Minimize the generation and volume of radioactive waste during operation and decommissioning (by minimizing the volume of components and structures that become contaminated during plant operation).

ESBWR design features that address the above design objectives are described in individual DCD sections and subsections. Table 12.3-18 provides a cross reference of applicable DCD chapters and subsections for structures/systems that address the six design objectives. Note that the systems/structures that employ the subject design features are of varied construction and purpose and can provide differing functions. As such, not all of the above design concepts are present as a design feature in each system/structure. Additionally, examples of generic and specific design features present in the ESBWR are listed below.

Generic ESBWR design features used to minimize contamination and generation of radioactive waste and facilitate decommissioning include the following:

- Design of equipment to minimize the buildup of radioactive material and to facilitate flushing of crud traps;
- Provisions for design features to plant systems such as the RWCU/SDC System, liquid and solid radwaste systems and the condensate demineralizer to minimize crud buildup;
- Provisions for draining, flushing, and decontaminating equipment and piping;
- Penetrations through outer walls of a building containing radiation sources are sealed to prevent miscellaneous leaks to the environment;
- Equipment drain sump vents are hard-piped directly to the RW HVAC System to collect airborne contaminants released from discharges to the sump;
- Appropriately sloped floors around floor drains in areas where the potential for a spill exists to limit the extent of contamination. The floor drains are monolithic in construction to minimize possibility of liquid penetrating at embedment boundaries. No grout is used in the installation of floor drains. Periodic visual inspections of the installation around the floor drains are performed to ensure no bypass exists in these floor drain areas;
- Provisions for decontaminable epoxy-type wall and floor coverings, which provide smooth surfaces to ease decontamination. Epoxy-type coatings are applied to both steel surfaces and concrete areas appropriate for contamination control. These areas consist of the walls and floors of the RB, FB, and TB, radwaste areas, rooms containing equipment with liquid radioactive sources, floor drain areas, washdown bays, and the RW Tunnel;

PRELIMINARY

- Equipment and floor drain sumps are stainless steel lined to reduce crud buildup due to corrosion and provide surfaces that are easily decontaminated;
- For all areas with the potential for airborne radioactivity, the ventilation systems are designed such that during normal and maintenance operations, airflow between areas is always from an area of lower potential contamination to an area of higher potential contamination;
- The ESBWR is designed to limit the use of cobalt bearing materials on moving components that have historically been identified as major sources of radioactivity in reactor coolant;
- To facilitate decommissioning, the RB, FB, TB, and RW are designed for large equipment removal, consisting of entry doors from the outside and numerous cubicles with equipment hatches inside the buildings;
- To facilitate decommissioning and ease of access, the radwaste process systems are skid-mounted and located in the RW to allow truck access, and system skid loading and unloading;
- For some piping, feed-throughs with short sections, the piping may be embedded in concrete as discussed in DCD Subsection 12.3.1.2.4. Minimization of short sections with embedded piping to the extent practicable facilitates the dismantlement of the systems and decommissioning;

Specific ESBWR design features used to minimize the generation of radioactive waste include the following:

- LWMS is divided into several subsystems, so liquid wastes from various sources can be segregated and processed separately, based on the most efficient process for each specific type of impurity and chemical content. This segregation allows for efficient processing and minimization of overall liquid waste.
- During liquid processing by LWMS, radioactive contaminants are removed and the bulk of the liquid is purified and either returned to the condensate storage tank or discharged to the environment, minimizing overall liquid waste. The radioactivity removed from liquid waste is concentrated in filter media ion exchange resins and concentrated waste. The filter sludge, ion exchange resins and concentrated waste are discharged to SWMS for further processing.
- SWMS is designed to segregate and package wet and dry types of radioactive solid waste for off-site shipment and storage. This segregation allows for efficient processing and minimization of overall quantity of solid waste.
- For management of gaseous radioactive waste, the OGS minimizes and controls the release of radioactive material into the atmosphere by delaying release of the offgas process stream initially containing radioactive isotopes of krypton, xenon, iodine, nitrogen, and oxygen.

PRELIMINARY

12.3.1.5.2 Operational/Programmatic Considerations

Operational programs and procedures that address the requirements of 10 CFR 20.1406 are necessary adjuncts of the design features. The following operational and post-construction objectives summarize Regulatory Guide 4.21 Position C.1 through C.4 and are addressed by the COL applicants:

- Periodically review operational practices to ensure operating procedures reflect the installation of new or modified equipment, personnel qualification and training are kept current, and facility personnel are following the operating procedures.
- Facilitate decommissioning by maintenance of records relating to facility design and construction, facility design changes, site conditions before and after construction, onsite waste disposal and contamination and results of radiological surveys.
- Develop a conceptual site model (based on site characterization and facility design and construction) that aid in the understanding of the interface with environmental systems and the features that control the movement of contamination in the environment.
- Evaluate the final site configuration after construction to assist in preventing the migration of radionuclides offsite via unmonitored pathways.

The COL Applicant will address the operational and post-construction objectives of Regulatory Guide 4.21 (COL 12.3-4-A).

12.3.2 Shielding

12.3.2.1 General Design Guides

The primary objective of the radiation shielding is to protect operating personnel and the general public from radiation emanating from the reactor, the power conversion systems, the radwaste process systems, and the auxiliary systems, while maintaining appropriate access for operation and maintenance. The radiation shielding is also designed to keep radiation doses to equipment below levels where disabling radiation damage occurs.

Specifically, the shielding requirements in the plant are designed to perform the following functions:

- Limit the exposure of the general public, plant personnel, contractors, and visitors to levels that are ALARA and within 10 CFR 20 requirements;
- Limit the radiation exposure of personnel, in the unlikely event of an accident, to levels that are ALARA and which conform to the limits specified in 10 CFR 50, Appendix A, GDC 19 to ensure that the plant is maintained in a safe condition during an accident; and
- Limit the radiation exposure of critical components within specified radiation tolerances, to assure that component performance and design life are not impaired.

PRELIMINARY

12.3.2.2 Design Description

12.3.2.2.1 General Design Guides

In order to meet the above design objectives, the following guides are used in the shielding design of the ESBWR:

- All systems containing radioactivity are identified and shielded based on access and exposure level requirements of surrounding areas. The radiation zone maps described in Subsection 12.3.1.3 indicate design radiation levels for which shielding for equipment contributing to the dose rate in the area is designed.
- The source terms used in the shielding calculations are analyzed with a conservative approach. Transient conditions, as well as shut down and normal operating conditions, are considered to ensure that a conservative source is used in the analysis. Shielding design is based on fission product quantities in the coolant corresponding to the design basis off-gas release, in addition to activation products. This is considered an anticipated operational occurrence, and hence represents conservatism in design. For components where N-16 is the major radiation source, a concentration based upon operating plant data is used.
- Effort is made to locate processing equipment in a manner that minimizes the shielding requirements. Shielded labyrinths are used to eliminate radiation streaming through access ways from sources located in cubicles.
- Penetrations through shield walls are located so as to minimize the effect on surrounding areas due to radiation streaming through the penetrations. The approaches used to locate and shield penetrations, when required, are discussed in Subsection 12.3.1.2.1.
- Wherever possible, radioactive piping is run in a manner that minimizes radiation exposure to plant personnel. This involves:
  - Minimizing radioactive pipe routing in corridors;
  - Avoiding the routing of high-activity pipes through low-radiation zones;
  - Use of shielded pipe trenches and pipe chases, where routing of high-activity pipes in low-level areas cannot be avoided; and
  - Separating radioactive and non-radioactive pipes for maintenance purposes.
- To maintain acceptable levels at the valve stations, motor-operated or diaphragm valves are used, where practical. For valve maintenance, provision is made for draining and flushing associated equipment so that radiation exposure is minimized. If manual valves are used, provision is made for shielding the operator from the valve by use of shield walls and valve stem extensions, where practicable.
- Shielding is provided to permit access and occupancy of the control room to ensure that plant personnel exposure following an accident does not exceed the values set forth in 10 CFR 50, Appendix A, GDC 19. The analyses of the doses to MCR personnel for the design basis accidents are included in Chapter 15.

PRELIMINARY

- The dose at the site boundary as a result of direct and scattered radiation from the turbine and associated equipment is considered.
- In selected situations, provisions are made for shielding major radiation sources during inservice inspection to reduce exposure to inspection personnel. For example, steel platforms are provided for inservice inspection (ISI) of the RPV nozzle welds and associated piping.
- The primary material used for shielding is concrete at a density of 2.35 gm/cm^3. Concrete used for shielding purposes is designed in accordance with Regulatory Guide 1.69 (Reference 12.3-12). Where special circumstances dictate, steel, lead, water, lead-loaded silicone foam, or a boron-laced refractory material is used.

12.3.2.2.2 Method of Shielding Design

The radiation shield wall thicknesses are determined using basic shielding data and proven shielding codes. A list of the computer programs used is contained in Table 12.3-1. The shielding design methods used also rely on basic radiation transport equations contained in Reference 12.3-1. The sources for basic shielding data, such as cross sections, buildup factors, and radioisotope decay information, are listed in References 12.3-2 through 12.3-10.

The shielding design is based on the plant operating at maximum design power with the release of fission products resulting in a source of noble gas after a 30-minute decay period, and the corresponding activation and corrosion product concentrations in the reactor water listed in Section 11.1. Radiation sources in various pieces of plant equipment are cited in Section 12.2. Shutdown conditions, such as fuel transfer operation, as well as accident conditions, such as a Loss of Coolant Accident (LOCA) or a Fuel Handling Accident, have also been considered in designing shielding for the plant.

The mathematical models used to represent a radiation source and associated equipment and shielding are established to ensure conservative calculation results. Depending on the versatility of the applicable computer program, various degrees of complexity of the actual physical situation are incorporated. In general, cylindrically shaped equipment such as tanks, heat exchangers, and demineralizers are mathematically modeled as truncated cylinders. Equipment internals are sectional and homogenized to incorporate density variations, where applicable. For example, the tube bundle section of a heat exchanger exhibits a higher density than the tube bundle clearance circle, due to the tube density, and this variation is accounted for in the model. Complex piping runs are conservatively modeled as a series of point sources spaced along the piping run. Equipment containing sources in a parallelepiped configuration, such as fuel assemblies and fuel racks are modeled as parallelepiped with a suitable homogenization of materials contained in the equipment. The shielding for these sources is also modeled on a conservative basis, with discontinuities in the shielding, such as penetrations, doors, and partial walls accounted for. The dimension of the floor decking is not considered in the shielding calculation as it is part of the effective shield thickness provided by the floor slab.

Pure gamma dose rate calculations, both scattered and direct, are conducted using point kernel codes (QADF/GGG). The source terms are divided into groups as a function of photon energy, and each group is treated independently of the others. Credit is taken for attenuation through all phases of material, and buildup is accounted for using a third-order polynomial buildup factor

PRELIMINARY

equation. The more conservative material buildup coefficients are selected for laminated shield configuration to ensure conservative results.

For combined gamma and neutron shielding situations, discrete ordinates techniques (DORT) are applied.

The shielding thicknesses are selected to reduce the aggregate dose rate from significant radiation sources in surrounding areas to values below the upper limit of the radiation zone specified in the zone maps in Subsection 12.3.1.3. By maintaining dose rates in these areas at less than the upper limit values specified in the zone maps, sufficient access to the plant areas is allowed for maintenance and operational requirements.

Where shielded entries to high-radiation areas such as labyrinths are required, a gamma ray scattering code (GGG) is used to confirm the adequacy of the labyrinth design. The labyrinths are designed to reduce the scattered as well as the direct contribution to the aggregate dose rate outside the entry, such that the radiation zone designated for the area is not violated.

12.3.2.2.3 Plant Shielding Description

Plant shielding geometry associated with major sources is summarized in Table 12.3-8. The general description of the shielding is provided below:

Containment - The major shielding structures located in the drywell area consist of the reactor shield wall and the drywell wall. The reactor shield wall in general consists of 16 cm of steel plate. The primary function served by the reactor shield wall is the reduction of radiation levels in the drywell due to the reactor to equipment such that service life is not limited. In addition, the reactor shield wall reduces gamma heating effects on the drywell wall, as well as providing for low radiation levels in the drywell during reactor shutdown. The drywell is an F radiation zone during full power reactor operation and is not accessible during this period.

The containment (drywell) outside wall is a 2 m thick reinforced concrete cylinder that totally surrounds the drywell. A 2.4 m thick reinforced concrete containment top slab covers the drywell. The drywell wall attenuates radiation from the reactor and other radiation sources in the drywell to allow occupancy of the reactor building during full power reactor operation.

The ESBWR plant includes all necessary shielding provisions in the upper drywell in order to reduce the dose ALARA during transfer of irradiate spent fuel assemblies. The ESBWR plant includes all applicable shielding design provisions to minimize dose rates in case of a fuel handling mishap resulting in dropping a fuel assembly across the reactor flange.

Reactor Building - In general, the shielding for the RB is designed to maintain open areas at dose rates less than 6 µSv/hr (0.6 mrem/hr).

Penetrations of the containment wall are shielded to reduce radiation streaming. Localized dose rates outside these penetrations are limited to less than 50 µSv/hr (5 mrem/hr). The penetrations through interior shield walls of the reactor building are shielded using a lead-loaded silicone sleeve to reduce the radiation streaming. Penetrations are also located so as to minimize the consequences of radiation streaming into surrounding areas.

The components of the RWCU/SDC System are located in the RB. Both the RWCU/SDC regenerative and nonregenerative heat exchangers are located in shielded cubicles separated from the other components of the system. Neither cubicle needs to be entered for system operation.

Process piping between the heat exchangers and the demineralizers is routed through shielded areas or embedded in concrete to reduce the dose rate in surrounding areas. The RWCU/SDC demineralizers are located in separate shielded cubicles. This arrangement allows maintenance of one unit while operating the other. The dose rate in the adjoining demineralizer cubicle from the operating unit is less than 250 µSv/hr (25 mrem/hr). Entry into the demineralizer cubicle, which is required infrequently, is via shielded hatches. The bulk of the piping and valves for the filter demineralizers is located in an adjacent shielded valve gallery. Backfilling and resin application of the filter demineralizers are controlled from an area where dose rates are less than 10 µSv/hr (1 mrem/hr).

The ESBWR employs a passive cooling system in addition to the RWCU/SDC System for cooling the core and vessel. Access into the cubicles is not required to operate the systems. All such components that could become contaminated in the event of an accident are located in the containment except those components that would be used as part of the RWCU/SDC System.

Fuel Storage - The fuel storage pool is designed to ensure the dose rate around the pool area is less than 25 µSv/hr (2.5 mrem/hr). In the event of an anticipated operational occurrence where the fuel sustains significant damage, such as a fuel drop accident, airborne dose rates in the pool area could significantly exceed this dose rate.

Fuel Handling – A safe water shielding depth of at least 2591 mm (8.5 ft.) is always maintained over the active fuel during transit of a single grappled fuel bundle from/to the reactor vessel and/or the spent fuel racks. Under these conditions, the dose rate is calculated to be less than 267 µSv/hr (27 mrem/hr) at the water surface.

Control Room - The dose rate in the MCR is limited to 6 µSv/hr during normal reactor operating conditions. The outer walls of the Control Building (CB) are designed to attenuate radiation from radioactive materials contained within the RB and from possible airborne radiation surrounding the CB following a LOCA. The walls provide sufficient shielding to limit the direct-shine exposure of MCR personnel following a LOCA to a fraction of the 5 rem limit as is required by 10 CFR 50 Appendix A, GDC 19.

Main steam tunnel - The main steam tunnel extends from the primary containment boundary in the RB up to the turbine stop valves. The primary purpose of the steam tunnel is to shield the plant complex from N-16 gamma shine in the main steam lines. The tunnel walls provide sufficient shielding to limit the direct-shine exposure from the main steam lines at any point that may be inhabited during normal operations.

12.3.3 Ventilation

The HVAC systems for the various buildings in the plant are discussed in Section 9.4, including the design bases, system descriptions, and evaluations with regard to the heating, cooling, and ventilating capabilities of the systems. This Subsection discusses the radiation control aspects of the HVAC systems.

PRELIMINARY

12.3.3.1 Design Objectives

The following design objectives apply to all building ventilation systems:

- The systems are designed to make airborne radiation exposures to plant personnel and releases to the environment ALARA. To achieve this objective, the guidance provided in Regulatory Guide 8.8 is followed.
- The concentration of radionuclides in the air in areas accessible to personnel for normal plant surveillance and maintenance is below the concentrations that define an airborne radioactivity area in 10 CFR 20 during normal power operation. This is accomplished by establishing in each area a reasonable compromise between specifications on potential airborne leakages in the area and HVAC flow through the area. Appendix 12.A to this chapter outlines the methodology by which such calculations are made.

12.3.3.2 Design Description

In the following subsections, the design features of the various ventilation systems that achieve the radiation control design objectives are discussed. For all areas potentially having airborne radioactivity, the ventilation systems are designed such that during normal and maintenance operations, airflow between areas is always from an area of low potential contamination to an area of higher potential contamination.

12.3.3.2.1 Control Room Ventilation

The CB atmosphere is maintained at positive pressure >31 Pa. (>1/8”wg) at all times in order to prevent infiltration of contaminants. When offsite power is available, fresh air may be taken in via the single inlet system, which has its intake structure on the side of the building. During an isolation event, if offsite or backup power is not available, air can be supplied by the operation of an Emergency Filter Unit (EFU) following loss of preferred power. The EFUs provide emergency ventilation and pressurization for the Control Room Habitability Area (CRHA). The EFUs are part of the Control Room Habitability Area HVAC subsystem (CRHAVS) described in Subsection 9.4.1 and 6.4.

The EFUs are located in closed rooms that help prevent the spread of any radioactive contamination during maintenance. Adequate space is provided for maintenance activities. The particulate and HEPA filters can be bagged when being removed from the unit. Before removing the charcoal, any radioactivity is allowed to decay to minimal levels, and is then removed through a connection in the bottom of the filter by a pneumatic transfer system. Air used in the transfer system goes through a HEPA filter before being exhausted. Respiratory protection equipment is utilized during maintenance activities, if necessary.

For a complete description of the CRHAVS, see Subsection 9.4.1.

12.3.3.2.2 Containment

Access into the containment drywell is not permitted during normal operation. The ventilation system inside merely circulates, without filtering, the air. The only airflow out of the drywell into accessible areas is minor leakage through the wall. During maintenance, the drywell air is purged before access is allowed.

PRELIMINARY

12.3.3.2.3 Reactor Building

The RB HVAC system is divided into two major components: the contaminated and the clean areas. The clean area system conditions and circulates air through all the clean areas of the reactor building. The contaminated area system conditions and circulates air through the contaminated areas of the building. Flow into both areas is directed from the corridors (point of highest pressure) to the equipment alcove rooms, then to the rooms themselves, and finally to the external wall pipe chases and from the pipe chases back to the HVAC system. The clean area system dumps circulated air to the environment through building vents, while the contaminated air system directs flow through the HVAC system to the RB/FB stack. Under isolation conditions, the HVAC system isolates to localize any contamination until operations and health physics personnel determine the best decontamination method.

For a description of the RB HVAC system, see Subsection 9.4.6.

12.3.3.2.4 Radwaste Building

The RW is divided into two zones for ventilation purposes. The control room is one zone, and the remainder of the building is the other zone. The air pressure in the first zone is maintained above atmospheric, while the air pressure in the second zone is maintained below atmospheric. Air in the second zone is drawn from outside the building and distributed to various work areas within the building. Air flows from the work areas and is then discharged via the RW stack. An alarm sounds in the control room if the exhaust fan fails. The exhaust flow is monitored for radioactivity, and if a high activity level is detected, the potentially radioactive cells are automatically isolated, but airflow through the work areas continues.

If the exhaust flow high-radiation alarm continues to annunciate after the tank and pump rooms are isolated, the work area branch exhaust ducts are selectively manually isolated to locate the involved building area. Should this technique fail, because the airborne radioactivity has spread throughout the building, the control room air conditioning continues, but the air conditioning for the balance of the building is shut down.

The work area's exhaust air is drawn through a filter unit consisting of a particulate filter and a HEPA filter before being discharged to the RW stack. The air is monitored for radioactivity, and if a high level is detected, supply and exhaust is terminated.

Maintenance provisions for the filters are similar to those for the CBVS.

See Subsection 9.4.3 for a detailed discussion of the RW HVAC System.

12.3.3.2.5 Fuel Building

The Fuel Building HVAC System (FBVS) consists of the Fuel Building General Area HVAC Subsystem (FBGAVS) and the Fuel Building Fuel Pool Area HVAC Subsystem (FBFPVS). The FBGAVS serves the general area. The FBFPVS serves the refueling floor and pool areas. The FBVS operates during normal plant operation, plant startup, and plant shutdown.

The FBGAVS consists of two 100% capacity AHUs with two 100% capacity supply fans, two 100% capacity exhaust fans, recirculation AHUs, and unit heaters. The FBGAVS incorporates a common supply and return duct system that distributes conditioned air to the general area of the FB and exhaust air to the outside atmosphere. During normal operation, air travels through the AHU's stages where particulates are removed from the air by low and high efficiency filters;

heat is transferred between the mixed air and the hot/chilled water coils; and the conditioned air is distributed to the clean areas by the supply fan. Exhaust air is ducted to the exhaust fan and exhausted to the outside atmosphere.

The FBFPVS consists of two 100% capacity AHUs with two 100% capacity supply fans, two 100% capacity exhaust fans, and redundant bubble-tight isolation dampers. The FBFPVS is a once-through ventilation system that distributes conditioned air to the refueling area of the reactor and SFP area of the FB. During normal operation, outside air travels through the AHU's stages where particulates are removed from the air by low and high efficiency filters; heat is transferred between the air and the hot/chilled water coils; and the conditioned air is distributed to the refueling area and SFP surfaces. Air is ducted to the exhaust fan and exhausted to the outside atmosphere through the RB/FB stack. The exhaust system has the manual capability to divert the exhaust for filtration by the purge exhaust filter unit, prior to discharge to the RB/FB stack. FBFPVS exhaust fans are used for smoke removal.

The RB/FB vent stack provides monitoring and discharging of FBGAVS and FBFPVS exhausts. See Subsection 9.4.2 for a detailed discussion of the FBVS.

12.3.3.3 Accident Conditions

The ventilation systems filter unit designed to operate during accident conditions is the CB EFU. The RB HVAC Purge Exhaust Filter Units are required to operate if the post-accident recovery phase is pursued and are consequently classified as nonsafety-related.

To determine the radiation level in the HVAC filters in accident conditions, the LOCA event is postulated.

The source term of the RB HVAC filter for the post accident recovery phase dose assessment is the LOCA Inventory in Reactor Building obtained following the assumptions of Regulatory Guide 1.183 (Reference 12.3-16). To ensure conservatism, a 1 cfm leak rate from the RB was used.

The source term of the CB EFU for accident dose assessment is the LOCA inventory at the EFU intakes obtained following the assumptions of Regulatory Guide 1.183. To ensure conservatism, a 300 cfm leak rate from the RB was used. The activity retained in the filters over 30 days corrected for radioactive decay is shown in Table 12.3-9.

In order to maintain the exposure from filter maintenance ALARA, the shielding wall thickness between RB HVAC filter cubicles is sized so that the dose contribution in any cubicle from the filter in the adjacent one does not exceed 250 μSv/hr under normal operation.

For the CB EFU and the RB filters, the dose rates in the filter and adjacent rooms in accident conditions are shown in Tables 12.3-10a and 12.3-10b.

12.3.4 Area Radiation and Airborne Radioactivity Monitoring Instrumentation

The following systems are provided to monitor area radiation and airborne radioactivity within the plant:

- The Area Radiation Monitoring System (ARMS) continuously measures, indicates and records the gamma radiation levels at strategic locations throughout the plant except within the primary containment, and activates alarms in the MCR as well as in local areas

to warn operating personnel to avoid unnecessary or inadvertent exposure to radiation. This system is classified as nonsafety-related.

- The Containment Monitoring System (CMS) continuously measures, indicates, and records the gamma radiation levels within the primary containment (drywell and suppression chamber), and activates alarms in the main control room on a high radiation level. As described in Subsection 7.5.2, four gamma sensitive ion chambers are provided within the primary containment to monitor gamma rays during normal, abnormal and accident conditions. Two redundant sensors are located in the drywell and two in the wetwell. The monitors are located, such that they are widely separated to provide independent measurements, with a large fraction of the containment volume considered in both the wetwell and drywell. Further, the selection of the location considers reasonable access for personnel to allow for replacement, maintenance and calibration of equipment. The range of each monitor covers 7 decades from 0.01 Gy/hr (1R/hr) to 10^5 Gy/hr (10^7 R/hr) as required by Regulatory Guide (RG) 1.97 (Reference 12.3-13). The CMS is classified as safety-related. The radiation monitors have been designed in accordance with NUREG-0737, Item II.F.1 (Reference 12.3-17).
- Airborne radioactivity in effluent releases and ventilation air exhausts is continuously sampled and monitored by the Process Radiation Monitoring System (PRMS) for noble gases, air particulates and halogens. As described in Section 11.5, airborne contamination is sampled and monitored at each stack, in the off-gas releases, and in the ventilation exhaust from the RB, RW and TB. Samples are periodically collected and analyzed for radioactivity. In addition to this instrumentation, portable air samplers are used for compliance with 10 CFR 20 restrictions to check for airborne radioactivity in work areas prior to entry where potential radiation levels may exceed the allowable limits.
- The in-plant airborne radiation monitoring instrumentation is located so that selected local areas and ventilation paths are monitored. Each location monitored is supplied with a local audible alarm (visual alarm in high noise areas) and the monitor has variable alarm set points. When appropriate, selected airborne radioactivity sampling points are located upstream of any ventilation filter trains to monitor representative radioactivity concentrations from the areas being sampled. Plant operating personnel are supplied with continuous information about the airborne radioactivity levels throughout the plant. The instruments used for monitoring airborne radioactivity are specified to detect the time integrated change of the most limiting particulate and iodine species equivalent to those concentrations specified in Appendix B of 10 CFR Part 20 (one derived air concentration) in each monitored plant area within 10 hours). Locations are selected based on the potential for leakage into rooms and areas that contain radioactive processes that become airborne and where personnel occupancy is required for operation of the reactor plant.
- The radiation instrumentation that monitors airborne radioactivity is classified as nonsafety-related. Airborne radiation monitoring operational considerations, such as the procedures for operation and calibration of the monitors, as well as the placement of the portable monitors, are the COL applicant's responsibility (COL 12.3-2-A).

PRELIMINARY

12.3.4.1 ARM System Description

Every ARM channel consists of a gamma sensitive detector and a digital area radiation processor; all channels are provided with local visual and audible alarms and local readouts. Where appropriate, additional readouts and alarms, provided by local auxiliary units are utilized. The output signals from the detectors are digitized and multiplexed for transmission to digital radiation monitors for measurement and display. Also, the radiation signals are transmitted to the process computer for recording. Each radiation monitoring channel has two adjustable trip alarm circuits, one for high radiation and the other for downscale indication (loss of sensor input). Also, each area radiation monitor has a built-in self test capability that checks for gross failures and activates an alarm on a power failure or an inoperative monitor. Auxiliary units with local audible alarms are provided in selected local areas to provide for immediate warning in order to minimize occupational exposure. Each area radiation monitor is powered from a non-1E vital 120 VAC power source, which is continuously available during loss of off-site power.

12.3.4.2 ARM Detector Location and Sensitivity

The detector locations are shown on plant layout drawings for each building (Figures 12.3-23 through 12.3-42). The area radiation channels for each building are listed in Tables 12.3-2 through 12.3-6, along with reference to the figure that shows the detector location, the channel monitoring range, and the local area alarms assignment. The monitoring range of each area radiation channel is shown in Table 12.3-7.

12.3.4.3 Pertinent Design Parameters and Requirements

Two high-range radiation channels are provided in the fuel transfer and storage area to monitor radiation that may result from a fuel handling accident. Criticality detection monitors are not needed to satisfy the criticality accident requirements of 10 CFR 70.24 since the ESBWR design utilizes high-density fuel storage racks that are designed to be subcritical under normal, abnormal and accident conditions. The new fuel bundles are stored under water in storage racks that are located in the fuel vault adjacent to the reactor cavity, while the spent fuel bundles are stored in racks that are placed at the bottom of the fuel storage pool. A full array of loaded new or spent fuel storage racks is designed to be subcritical as defined in Subsections 9.1.1 and 9.1.2, respectively.

Both Process Radiation Monitors and Area Radiation Monitors, are located in the fuel storage and associated handling areas in order to detect excessive radiation levels, and are used to demonstrate compliance with 10 CFR 50.68(b)(6) (Reference 12.3-18).

Process Radiation Monitors, described in Subsection 11.5.3, monitor ventilation paths from the fuel storage area and, in addition to isolating the appropriate ventilation path upon receipt of high radiation, provide indication and alarms to the operator. Area Radiation Monitors, listed in Table 12.3-2 and Table 12.3-3, are provided in fuel storage areas to detect high radiation levels and provide visual and audible indication to operating personnel.

The detectors and radiation monitors are responsive to gamma radiation over an energy range of 80 keV to 7 MeV. The energy dependence does not exceed 20% of the reading from 100 keV to 3 MeV. The overall system design accuracy is within 10% of equivalent linear full-scale output for any decade.

The alarm setpoints are established in the field following equipment installation at the site. The exact settings are based on sensor location, background radiation levels, expected radiation levels, and low occupational radiation exposures. The radiation alarm setpoint for each channel is set slightly above the background radiation level that is normal in the area where the monitor is located.

Each channel is calibrated based on a pseudo input signal to verify monitor response. Each detector is calibrated using a radioactive source traceable to the National Institute of Standards and Technology. The area radiation monitors are checked and calibrated periodically.

The ARMS is designed to provide early detection and warning for personnel protection to ensure occupational radiation exposures are ALARA in accordance with guidelines stipulated in RG 8.2 (Reference 12.3-14) and RG 8.8 (Reference 12.3-11). Also, the ARMS include instrumentation in crucial areas of the reactor building where access may be required to service safety-related equipment following a LOCA event.

12.3.5 Post-Accident Access Requirements

The locations requiring access to mitigate the consequences of an accident during the post-accident period are the main control room, the technical support center, the electrical equipment rooms for divisions 1, 2, 3, and 4, the remote shutdown panels, the Standby Liquid Control (SLC) System pump room, the nonsafety-related Distributed Control and Information System (DCIS) rooms, the health physics facility (counting room), the IC/PCCS and fuel pool refill valves, the A-train RWCU/SDC valve room, and the diesel generator control rooms (Standby and Ancillary). The dose evaluations are within regulatory guidelines.

Access to post-accident accessible areas through out the RB/CB/electrical building (EB) complex is controlled via the service building (SB). Entrance to the service building and access to the other areas are controlled via double locked secured entryways. Access to the reactor building is via two specific routes, one for clean access and the second for controlled access. During an event such as a design basis accident, the main control room area is maintained under filtered HVAC at positive pressure with respect to the environment. Air infiltration is minimized by positive flow via double entry ways. Therefore, radiation exposure is limited to gamma shine from the RB, TB, main steam line access corridor, and skyshine.

During a design basis accident event, access to monitor systems is controlled from the SB via the controlled access way. These corridors are not maintained under filtered positive pressure so personal protection equipment (e.g., protective clothing and respiratory protection equipment) is required in the access corridor. Primary contamination would occur from leakage through primary containment. This pathway is considered minimal and minor contamination under even the most adverse conditions is expected. Access to the IC/PCCS and the Ancillary Diesel Building is from outside the RB.

The RB post-accident accessible areas are all located off the controlled access way, except for the SLCS pump room; contamination is limited to air infiltration from the accident environment and penetration leakage from primary containment sampling locations. Sources of radiation in each area are limited to gamma shine from the RB and potential leakage from primary containment. These sources are considered minimal including the stack monitor room, which contains only instrumentation with their associated penetrations for monitoring stack effluent.

PRELIMINARY

Actions beyond 72 hours and actions for long term post-accident recovery are listed in Table 12.3-11.

Figures 12.3-52 through 12.3-70a and Figures 12.3-74 through 12.3-86 show the post-accident accessible areas and personnel access and egress routes.

12.3.6 Post-Accident Radiation Zone Maps and Mission Doses

The airborne radiation source term after a LOCA, as indicated in Chapter 15, is taken as input data using the methodology of Regulatory Guide 1.183. The post-accident dose rates for each time interval at each post-accident access area and room are shown in Tables 12.3-12 and 12.3-13 with the exception of the MCR and technical support center (TSC) which are evaluated separately.

The post-accident radiation zone maps for the post-accident access areas in the RB, CB, EB, and SB are presented in Figures 12.3-43 through 12.3-51f. With the exception of the Health Physics Facility and the Hot Chemical Lab which are assessed at 8 hours, the zone maps represent the gamma dose rates presented in Tables 12.3-12 and 12.3-13 at 72 hours consistent with LOCA analysis and assumptions on operator access.

The radiation "mission" dose in performing long-term recovery actions in the post-accident access areas have been calculated and the results are listed in Tables 12.3-14 through 12.3-17. The following criteria are considered:

- Both air submersion and inhalation airborne doses are taken into account.
- Round trip travel and occupancy times are taken into account. The mission doses are calculated based on the dose rates in various rooms.
- A dose reduction factor is assumed by using a pressure demand self-contained breathing apparatus.

Doses for each activity are below the 0.05 Sv (5 rem) GDC 19 limit. Post-accident radiation doses in the MCR are also described in DCD Section 15.4, and are also below the 0.05 Sv (5 rem) GDC 19 limit. The expected post-accident radiation doses in the TSC are also below the 0.05 Sv (5 rem) criterion.

Although continuous occupancy is not required in the Health Physics Facility (counting room), the cumulative post-accident dose is less than the 0.05 Sv (5 rem) GDC 19 limit assuming continuous occupancy. The average dose in the Count Room is less than 15 mrem/hr which meets the NUREG-0737 II.B.2 requirement for continuous occupancy.

The RWCU/SDC System valve room may be accessed to rotate the flange cross-tie from RWCU/SDC to the FAPCS suction and discharge lines to the suppression pool as described in Subsection 5.4.8. Exposures have been evaluated without credit for filtered ventilation, and a 30 minute mission time is feasible after 12 days. If CONAVS system is operated, as described in Section 9.4, the 30-minute mission could be achieved earlier than 12 days.

12.3.7 COL Information

12.3-1-H Facility Design Features (Deleted)

12.3-2-A Operational Considerations

PRELIMINARY

Airborne radiation monitoring operational considerations such as the procedures for operations and calibration of the monitors, as well as the placement of the portable monitors, are the COL applicant's responsibility (Subsection 12.3.4).

12.3-3-H Controlled Access (Deleted)

12.3-4-A Compliance with 10 CFR 20.1406

The COL Applicant will address the operational and post-construction objectives of Regulatory Guide 4.21 (Subsection 12.3.1.5.2).

12.3.8 References

12.3-1 U.S. Atomic Energy Commission, "Reactor Shielding for Nuclear Engineers," TID-25951, 1973.

12.3-2 U.S. Department of Commerce, "Photon Cross Sections, Attenuation Coefficients, and Energy Absorption Coefficients from 10 KeV to 100 GeV," NSRDS-NBS20, August 1969.

12.3-3 U.S. Department of Health, Education, and Welfare, "Radiological Health Handbook," Revised Edition, January 1970.

12.3-4 U.S. Atomic Energy Commission, "Reactor Handbook, Volume III, Part B," 1962.

12.3-5 Lederer, Hollander, and Perlman, "Table of Isotopes," Sixth Edition (1968).

12.3-6 General Electric Company, "Polynomial Approximation of Gamma Ray Buildup Factors for a Point Isotropic Source", APEX-510, November 1958.

12.3-7 U.S. Atomic Energy Commission, "Reactor Physics Constants, Second Edition," ANL-5800, July 1963.

12.3-8 Brookhaven National Laboratory, "ENDF/B-III and ENDF/B-IV Cross Section Libraries".

12.3-9 Oak Ridge National Laboratory, "PDS-31 Cross Section Library".

12.3-10 "DLC-7, ENDF/B Photo Interaction Library".

12.3-11 USNRC, "Information Relevant to Ensuring that Occupational Radiation Exposures at Nuclear Power Stations Will Be as Low as Is Reasonably Achievable," Regulatory Guide 8.8, Revision 3, June 1978.

12.3-12 U.S. Atomic Energy Commission, "Concrete Radiation Shields for Nuclear Power Plants," Regulatory Guide 1.69, December 1973.

12.3-13 USNRC, "Criteria For Accident Monitoring Instrumentation For Nuclear Power Plants," Regulatory Guide 1.97, Revision 4, June 2006.

12.3-14 U.S. Atomic Energy Commission, "Guide for Administrative Practices in Radiation Monitoring," Regulatory Guide 8.2, February 1973.

PRELIMINARY

12.3-15 USNRC, "Standard Review Plan for the Review of Safety Analysis Reports for Nuclear Power Plants," NUREG-0800, Section 12.3-12.4 Radiation Protection Design Features, Draft Revision 3, April 1996.

12.3-16 USNRC, "Alternative Radiological Source Terms for Evaluating Design Basis Accidents at Nuclear Power Reactors," Regulatory Guide 1.183, Revision 0, July 2000.

12.3-17 USNRC, "Clarification of TMI Action Plan Requirements," NUREG-0737, November 1980.

12.3-18 USNRC, Title 10 Code of Federal Regulations, Part 50.68(b)(6), "Criticality Accident Requirements."

12.3-19 Title 10 Code of Federal Regulations, Part 20.1406, "Minimization of Contamination."

12.3-20 USNRC, "Minimization of Contamination and Radioactive Waste Generation: Life Cycle Planning," Regulatory Guide 4.21, June 2008.

PRELIMINARY

Table 12.3-1

Computer Programs Used in Shielding Design Calculations

Computer Code	Description
QADF	A multi-group, multi-region, point kernel gamma radiation code for calculating the flux and dose rate at discrete locations within a complex source geometry configuration.
GGG	A multi-group, multi-region, point kernel code for calculating the contributions due to gamma ray scattering in a heterogeneous three-dimensional space.
DORT	A discrete ordinates two-dimensional transport code. Multi-group, multi-region neutron or gamma transport.
QAD CGGP 1.0	"Quick and Dirty Combinatorial Geometry –Geometric Progression". A multi-group, multi-region, point kernel gamma radiation code for calculating the flux and dose rate at discrete locations within a complex source geometry configuration
SKYIII-PC	A Monte Carlo skyshine code designed to aid in the evaluation of the effects of structure geometry on the gamma-ray dose rate at given detector positions outside of a building housing N-16 gamma-ray sources.

PRELIMINARY

Table 12.3-2

Area Radiation Monitors for Reactor Building

ARM No.[1]	Description & Location	Figure No.	Monitoring Range[3]
1	Refueling Floor Area #1, EL 34000	12.3-31	H
2	Refueling Floor Area # 2, EL 34000	12.3-31	H
3	New Fuel Buffer Pool, EL 27000	12.3-30	H
4	New Fuel Buffer Pool, EL 27000	12.3-30	H
17	RWCU/SDC Pump, EL -11500	12.3-23	H
18	RB Sump Pumps, EL -11500	12.3-23	H
19*	RWCU/SDC Train A Heat Exchanger, EL -11500	12.3-23	H
20*	RWCU/SDC Train B Heat Exchanger, EL -11500	12.3-23	H
21	RB Lower Equipment Hatch, EL -6400	12.3-24	M
22	RB Lower Personnel Hatch, EL -6400	12.3-24	H
23	RB FMCRD HCU Room B, EL -6400	12.3-24	M
25	RB FMCRD HCU Room D, EL -6400	12.3-24	M
27	RB RWCU/SDC Filter Demineralizer Area EL -1000	12.3-25	H
28	RB Radiological Control Area Entrance, EL 17500	12.3-29	M
29	RB H2/O2 Monitoring (CMS), EL 13570	12.3-28	H
30	RB H2/O2 Monitoring (CMS) Panel, EL 13570	12.3-28	H
31	Instrument Rack Area #1, EL -11500	12.3-23	H
32	Instrument Rack Area #2, EL -11500	12.3-23	H
33	Instrument Rack Area #3, EL -11500	12.3-23	H
34	Instrument Rack Area #4, EL -11500	12.3-23	H
35	Instrument Rack Area #5, EL -11500	12.3-23	H
36	Instrument Rack Area #6, EL -11500	12.3-23	H
37	Instrument Rack Area #7, EL -11500	12.3-23	H
38	Instrument Rack Area #8, EL -11500	12.3-23	H
39[2]	IFTS Maintenance Room (Multiple), EL 17500	12.3-29	H
40	Fuel Handling Machine, EL 34000	12.3-31	H
41	RB Remote Shutdown Panel A Area, EL –1000	12.3-25	H
42	RB Remote Shutdown Panel B Area, EL –1000	12.3-25	H

[1] Note: Numbers 5 through 16, 24 and 26 not used.

[2] Utilizes auxiliary units.

[3] The monitoring ranges corresponding to these alphabetical designations are provided in Table 12.3-7.

* ARMs located in accessible areas where abnormal plant evolutions or anticipated operational occurrences can potentially result in dose rate increases of 1mSv/hr (100 mrem/hr) or more.

PRELIMINARY

Table 12.3-3

Area Radiation Monitors for Fuel Building

ARM No.[1]	Description & Location	Figure No.	Monitoring Range[2]
1	FB Spent Fuel Floor, EL 4650	12.3-26	H
2	Fuel Handling Machine, EL 9060	12.3-27	M
3	FB Fuel Transfer Cask Area, EL 4650	12.3-26	H
5	FB FAPCS Heat Exchangers, EL -11500	12.3-23	H
6*	FB FAPCS Backwash Transfer Pumps, EL -11500	12.3-23	H
9	FB Sump Pumps, EL -11500	12.3-23	H
10	FB FAPCS Heat Exchangers, EL -11500	12.3-23	H
10a	FB Ground Grade Access Pathway, EL 4650	12.3-26	M
11	FB Wash Down Bay Entry Door, EL 4650 (Truck)	12.3-26	H
12	FB IFTS Fuel Building Isolation Valve Room (INSIDE) EL 4650	12.3-26	H
13	Fuel Prep. Machine, EL 4650	12.3-26	H

[1] Note: Numbers 4, 7 & 8 not used.
[2] The monitoring ranges corresponding to these alphabetical designations are provided in Table 12.3-7.
* ARMs located in accessible areas where abnormal plant evolutions or anticipated operational occurrences can potentially result in dose rate increases of 1mSv/hr (100 mrem/hr) or more.

PRELIMINARY

Table 12.3-4

Area Radiation Monitors for Radwaste Building

ARM No.	Description & Location	Figure No.	Monitoring Range[1]
1	RW Electrical Panel Area, EL - 9350	12.3-39	H
2	RW Control Room, EL-2350	12.3-40	H
3	RW Resin Pump, EL - 9350	12.3-39	H
4	RW Resin Transfer Pump Room, EL-2350	12.3-40	H
5	RW Trailer Access Area, EL 4650	12.3-41	H
6*	RW Liquid Radioactive Waste Treatment Area, EL 4650	12.3-41	H
7*	RW Wet Solid Radioactive Waste Treatment Area, EL 4650	12.3-41	H
8*	RW Dry Solid Waste Treatment Area, EL 4650	12.3-41	H
9*	RW Packaged Waste Staging Area, EL 4650	12.3-41	H

[1] The monitoring ranges corresponding to these alphabetical designations are provided in Table 12.3-7.

* ARMs located in accessible areas where abnormal plant evolutions or anticipated operational occurrences can potentially result in dose rate increases of 1mSv/hr (100 mrem/hr) or more.

PRELIMINARY

Table 12.3-5

Area Radiation Monitors for Turbine Building

ARM No.[1]	Description & Location	Figure No.	Monitoring Range[2]
1*	Main Condenser Vault Area EL -1400	12.3-32	M
2*	Feedwater Heater Drain Cooler 1 A/B/C Room EL 12000	12.3-34	M
3	H_2 and O_2 Analyzer Room B EL 4650	12.3-33	M
4	Condensate Pump Room EL -1400	12.3-32	M
5*	Low Pressure Heater Area EL 20000	12.3-35	M
6*	Feedwater Heater 4 and Feedwater Storage Tank Room, EL 28000	12.3-36	M
7*	Turbine Building Steam Tunnel EL 20000	12.3-35	M
8*	Condensate Drain Tank and Steam Jet Air Ejector / H_2 Recombiner and Cooler Room B EL 4650	12.3-33	M
9*	Steam Jet Air Ejector/H_2 Recombiner and Cooler Room A EL 4650	12.3-33	M
10*	Feedwater Heater 5B and 6B Room EL 12000	12.3-34	M
11	Condensate Filter Access Hatch Room EL 6000	12.3-33	M
12	Corridor/Turbine Building Operating Floor EL 28000	12.3-36	M
13	Coridor/Turbine Building Operating Floor EL 28000	12.3-36	M
14	Crane Travel Area EL 35000	12.3-37	M
15	Equipment Main Access Area, EL 4650	12.3-33	M
16	RCCWS Pump/Exchanger Room A EL 4650	12.3-33	M
17*	Offgas Charcoal Adsorber Room Vessel Vault EL -1400	12.3-32	M
18	Condensate Pleated Filter Valve/Condensate Filter Transfer Pumps/Condensate Flow Control Valve Station Room EL -1400	12.3-32	M
19	Condensate Pleated Filter Valve/Condensate Filter Transfer Pumps/Condensate Flow Control Valve Station Room EL -1400	12.3-32	M
20	Condenser Sampling Pump Room A Sample Room Area EL -1400	12.3-32	M
21	Condenser Sampling Pump Room B EL -1400	12.3-32	M
22	Condensate Deep Bed Demineralizer Valve Room, EL 7650	12.3-33	M
23	H_2 and O_2 Analyzer Room A, EL 4650	12.3-33	M
24*	Feedwater Heater 5A and 6A Room EL 12000	12.3-33	M
25*	Feedwater Heater 7B Room EL 20000	12.3-35	M
26*	Feedwater Heater 7A Room Area A, EL 20000	12.3-35	M
27	Turbine Bldg Sampling/Drain Sump C, EL -1400	12.3-32	M
28	Corridor/Exhaust Duct Area EL 35000	12.3-37	M

PRELIMINARY

ARM No.[1]	Description & Location	Figure No.	Monitoring Range[2]
29	RCCWS Pump/Exchanger Room BEL 4650	12.3-33	M
30*	Main Condenser Vault Area, EL -1400	12.3-32	M

[1]Note: Numbers 1, 3, 8, 11, 12, and #14 utilize auxiliary units.

[2] The monitoring ranges corresponding to these alphabetical designations are provided in Table 12.3-7.

* ARMs located in accessible areas where abnormal plant evolutions or anticipated operational occurrences can potentially result in dose rate increases of 1mSv/hr (100 mrem/hr) or more.

PRELIMINARY

Table 12.3-6

Area Radiation Monitors for Control Building

ARM No.	Description & Location	Figure No.	Monitoring Range[1]
1.	Main Control Room, EL -2000	12.3-25	H

[1] The monitoring ranges corresponding to these alphabetical designations are provided in Table 12.3-7.

PRELIMINARY

Table 12.3-7

Area Radiation Channel Monitoring Range

Low Setting	High Setting	Descriptor
1E-4 mSv/hr (1E-2 mrem/hr)	1E+0 mSv/hr (1E+2 mrem/hr)	H (High Sensitivity)
1E-3 mSv/hr (1E-1 mrem/hr)	1E+1 mSv/hr (1E+3 mrem/hr)	M (Medium Sensitivity)
1E-2 mSv/hr (1E+0 mrem/hr)	1E+2 mSv/hr (1E+4 mrem/hr)	L (Low Sensitivity)
1E+0 mSv/hr (1E+2 mrem/hr)	1E+4 mSv/hr (1E+6 mrem/hr)	LL (Low-Low Sensitivity)
1E-4 Sv/hr (1E-2 rem/hr)	1E+2 Sv/hr (1E+4 rem/hr)	VL (Very Low Sensitivity)

PRELIMINARY

Table 12.3-8

Shielding Geometry (Nominal)

Elev.	Room	Room Name	North	East	South	West	Floor	Ceiling
Nuclear Island			**cm (in)**					
-11500	1151	RWCU/SDC Heat Exchanger Room A	75 (30)	110 (43)	100 (39)	100/75 (39/30)	Ground	70 (28)
-11500	1152	RWCU/SDC Pump Room A	60 (24)	55 (22)	55 (22)	60/40 (24/16)	Ground	90 (35)
-11500	1161	RWCU/SDC Heat Exchanger Room B	75 (30)	100 (39)	100/75 (39/30)	110 (43)	Ground	70 (28)
-11500	1162	RWCU/SDC Pump Room B	60 (24)	60 (24)	70 (28)	35 (14)	Ground	70 (28)
-11500	2102	FAPC Backwash Tank Room	70 (28)	80 (31)	90 (35)	110 (43)	Ground	90 (35)
-11500	2150	FAPC Pump/Heat Exchanger Room A	35 (14)	70 (28)	60 (24)	30 (12)	Ground	70 (28)
-11500	2151	Backwash Transfer Pump Room A	90 (35)	105 (41)	70 (28)	95 (37)	Ground	70 (28)
-11500	2160	FAPC Pump/Heat Exchanger Room B	35 (14)	30 (12)	60 (24)	35 (14)	Ground	70 (28)
-11500	2161	Backwash Transfer Pump Room B	70 (28)	105 (41)	70 (28)	95 (37)	Ground	70 (28)
-6400	1250	RWCU/SDC Heat Exchanger Room A	110(43)	110 (43)	100 (39)	100 (39)	70 (28)	70 (28)
-6400	1251	RWCU/SDC Filter/Demineralizer Vault A1	135 (53)	150 (59)	40 (16)	135 (53)	110 (43)	90 (35)
-6400	1252	RWCU/SDC Filter/Demineralizer Vault A2	40 (16)	150 (59)	40 (16)	135 (53)	110 (43)	90 (35)
-6400	1260	RWCU/SDC Heat Exchanger Room B	110(43)	100 (39)	100 (39)	100 (39)	70 (28)	70 (28)
-6400	1261	RWCU/SDC Filter/Demineralizer Vault B1	135(53)	40 (16)	150 (59)	40 (16)	110 (43)	90 (35)
-6400	1262	RWCU/SDC Filter/Demineralizer Vault B2	135(53)	40 (16)	150 (59)	70 (28)	110 (43)	90 (35)
-6400	2251	FAPC Filter/Demineralizer Vault 1	90 (35)	70 (28)	30 (12)	90 (35)	70 (28)	70 (28)
-6400	2261	FAPC Filter/Demineralizer Vault 2	30 (12)	70 (28)	115 (45)	90 (35)	70 (28)	70 (28)
Radwaste Building			**cm (in)**					
-9350	6103	Equipment Drain Collection Tank Room A	70 (28)	60 (24)	60 (24)	60 (24)	Ground	80 (31)
-9350	6104	Equipment Drain Collection Tank Room B	70 (28)	60 (24)	60 (24)	80 (31)	Ground	80 (31)

PRELIMINARY

Table 12.3-8

Shielding Geometry (Nominal)

Elev.	Room	Room Name	North	East	South	West	Floor	Ceiling
-9350	6105	Equipment Drain Collection Tank Room C	60 (24)	60 (24)	80 (31)	80 (31)	Ground	80 (31)
-9350	6106	Condensate Resin Holdup Tank Room	90 (35)	40 (16)	80 (31)	60 (24)	Ground	80 (31)
-9350	6107	Low Activity Resin Holdup Tank Room	100 (39)	80 (31)	60 (24)	100 (39)	Ground	80 (31)
-9350	6108	High Activity Resin Holdup Tank Room	70 (28)	90 (35)	70 (28)	100 (39)	Ground	80 (31)
-9350	6109	Concentrated Waste Tank Room	70 (28)	90 (35)	90 (35)	100 (39)	Ground	80 (31)
-9350	6150	Floor Drain Collection Tank Room A	70 (28)	80 (31)	60 (24)	60 (24)	Ground	80 (31)
-9350	6151	High Activity Phase Separator Room	100 (39)	90 (35)	70 (28)	40 (16)	Ground	80 (31)
-9350	6160	Floor Drain Collection Tank Room B	60 (24)	80 (31)	80 (31)	60 (24)	Ground	80 (31)
-9350	6161	Low Activity Phase Separator Room	100 (39)	60 (24)	70 (28)	40 (16)	Ground	80 (31)
-9350	6171	Floor Drain Sample Tank Room	30 (12)	35 (14)	30 (12)	30 (12)	Ground	80 (31)
-9350	6172	Equipment Drain Sample Tank Room	30 (12)	35 (14)	30 (12)	30 (12)	Ground	80 (31)
-2350	6103	Equipment Drain Collection Tank Room A	70 (28)	60 (24)	60 (24)	60 (24)	80 (31)	80 (31)
-2350	6104	Equipment Drain Collection Tank Room B	70 (28)	60 (24)	60 (24)	80 (31)	80 (31)	80 (31)
-2350	6105	Equipment Drain Collection Tank Room C	60 (24)	60 (24)	80 (31)	80 (31)	80 (31)	80 (31)
-2350	6106	Condensate Resin Holdup Tank Room	90 (35)	40 (16)	80 (31)	60 (24)	80 (31)	80 (31)
-2350	6107	Low Activity Resin Holdup Tank Room	100 (39)	80 (31)	60 (24)	100 (39)	80 (31)	80 (31)
-2350	6108	High Activity Resin Holdup Tank Room	70 (28)	90 (35)	70 (28)	100 (39)	80 (31)	80 (31)
-2350	6109	Concentrated Waste Tank Room	70 (28)	90 (35)	90 (35)	100 (39)	80 (31)	80 (31)
-2350	6150	Floor Drain Collection Tank Room A	70 (28)	80 (31)	60 (24)	60 (24)	80 (31)	80 (31)
-2350	6151	High Activity Phase Separator Room	100 (39)	90 (35)	70 (28)	40 (16)	80 (31)	80 (31)
-2350	6160	Floor Drain Collection Tank Room B	60 (24)	80 (31)	80 (31)	60 (24)	80 (31)	80 (31)
-2350	6161	Low Activity Phase Separator Room	100 (39)	60 (24)	70 (28)	40 (16)	80 (31)	80 (31)
-2350	6171	Floor Drain Sample Tank Room	30 (12)	35 (14)	30 (12)	30 (12)	80 (31)	80 (31)
-2350	6172	Equipment Drain Sample Tank Room	30 (12)	35 (14)	30 (12)	30 (12)	80 (31)	80 (31)
Turbine Building			**cm (in)**					

PRELIMINARY

Table 12.3-8

Shielding Geometry (Nominal)

Elev.	Room	Room Name	North	East	South	West	Floor	Ceiling
-1400	4196	Off-Gas Charcoal Absorber Vessel Vault	110 (43)	110 (43)	110 (43)	110 (43)	Ground	-
-1400	4197	Main Condenser Vault	110 (43)	110 (43)	60 (24)	110 (43)	Ground	
(Deleted)								
-1400	4182A	Condensate Pleated Filter Vault A	50 (20)	60 (24)	35 (14)	110 (43)	Ground	100 (39)
-1400	4182B-E	Condensate Pleated Filter Vault B-E	35 (14)	60 (24)	35 (14)	110 (43)	Ground	100 (39)
-1400	4182F	Condensate Pleated Filter Vault F	50 (20)	60 (24)	55 (22)	110 (43)	Ground	100 (39)
-1400	4183	Condensate Filter Backwash Receiving Tank Vault	45 (18)	65 (26)	85 (33)	95 (37)	Ground	100 (39)
(Deleted)								
-1400	4180	Condensate Demin. Resin Receiving Tank Vault	75 (30)	70 (28)	70 (28)	90 (35)	Ground	100 (39)
(Deleted)								
4650	4206B	Condensate Drain Tank and Steam Jet Air Ejector/H2 Recombiner & Cooler Room B	150 (59)	150 (59)	120 (47)	150 (59)	100 (39)	120 (47)
4650	4206A	Steam Jet Air Ejector/H2 Recombiner & Cooler Room A	115 (45)	150 (59)	120 (47)	150 (59)	70 (28)	30 (12)
(Deleted)								
(Deleted)								
4650	4281A	Condensate Deep Bed Demineralizer Vault A	35 (14)	90 (35)	35 (14)	55 (22)	100 (39)	100 (39)
4650	4281B-G	Condensate Deep Bed Demineralizer Vault B-G	35 (14)	90 (35)	35 (14)	55 (22)	100 (39)	100 (39)
4650	4281H	Condensate Deep Bed Demineralizer Vault H	35 (14)	90 (35)	90 (35)	55 (22)	100 (39)	100 (39)
12000	4301A	Feedwater Heater 5Aand 6A Room	100 (39)	100 (39)	100 (39)	100 (39)	100 (39)	100 (39)
12000	4301B	Feedwater Heater 5B and 6B Room	100 (39)	100 (39)	100 (39)	100 (39)	100 (39)	100 (39)
(Deleted)								
(Deleted)								
(Deleted)								
12000	4391	Turbine Building Steam Tunnel	150 (59)	150 (59)	150 (59)	150 (59)	-	

PRELIMINARY

Table 12.3-8

Shielding Geometry (Nominal)

Elev.	Room	Room Name	North	East	South	West	Floor	Ceiling
(Deleted)								
(Deleted)								
20000	4402A	Feedwater Heater 7A Room	100 (39)	100 (39)	100 (39)	100 (39)	100 (39)	100 (39)
20000	4402B	Feedwater Heater 7B Room	100 (39)	100 (39)	100 (39)	100 (39)	100 (39)	100 (39)
28000	4504	Feedwater Heater 4 and Feedwater Storage Tank Room	150 (59)	150 (59)	150 (59)	110 (43)	115 (45)	115 (45)
(Deleted)								
28000	4505	Moisture Separator and Reheater/HP and LP Turbine Room	150 (59)	110 (43)	150 (59)	150 (59)	100 (39)	150 (59)
(Deleted)								

PRELIMINARY

Table 12.3-9

Activity Accumulated in the HVAC Filters in Accident Conditions

Isotope	Reactor Building-HVAC Filter* (MBq)	Control Building EFU* (MBq)
Co-58	3.95E+05	1.54E+00
Co-60	1.36E+06	5.01E+00
Rb-86	3.97E+06	1.81E+01
Sr-89	3.77E+08	1.50E+03
Sr-90	7.31E+07	2.70E+02
Sr-91	4.76E-16	1.86E-20
Sr-92	1.02E-73	8.11E-78
Y-90	1.08E+07	1.69E+01
Y-91	6.55E+06	2.47E+01
Y-92	1.74E-54	7.40E-59
Y-93	1.42E-16	5.39E-21
Zr-95	8.04E+06	3.15E+01
Zr-97	1.06E-07	3.29E-12
Nb-95	8.98E+06	2.89E+01
Mo-99	2.09E+04	1.99E-01
Tc-99m	1.21E+03	1.89E-03
Ru-103	6.61E+07	2.69E+02
Ru-105	3.02E-43	1.59E-47
Ru-106	4.68E+07	1.74E+02
Rh-105	1.15E+01	1.46E-04
Sb-127	2.60E+05	2.08E+00
Sb-129	7.86E-44	4.18E-48
Te-127	4.90E+05	7.67E-01
Te-127m	2.02E+07	7.55E+01
Te-129	1.02E+05	1.60E-01
Te-129m	3.63E+07	1.50E+02
Te-131m	2.12E+00	3.00E-05
Te-132	1.15E+06	9.98E+00
I-131	4.79E+08	2.52E+03
I-132	2.61E+04	4.10E-02
I-133	1.01E-01	1.54E-06
I-134	0.00E+00	0.00E+00
I-135	9.59E-25	4.15E-29
Cs-134	1.56E+09	5.81E+03

PRELIMINARY

Table 12.3-9

Activity Accumulated in the HVAC Filters in Accident Conditions

Isotope	Reactor Building-HVAC Filter* (MBq)	Control Building EFU* (MBq)
Cs-136	6.74E+07	3.34E+02
Cs-137	1.02E+09	3.80E+03
Ba-139	0.00E+00	0.00E+00
Ba-140	1.46E+08	7.20E+02
La-140	2.54E+07	3.98E+01
La-141	1.19E-50	8.49E-55
La-142	0.00E+00	0.00E+00
Ce-141	1.23E+07	5.12E+01
Ce-143	1.09E+00	1.48E-05
Ce-144	2.14E+07	7.98E+01
Pr-143	1.79E+06	7.88E+00
Nd-147	3.99E+05	2.06E+00
Np-239	1.11E+04	1.14E-01
Pu-238	7.02E+04	2.59E-01
Pu-239	7.88E+03	2.89E-02
Pu-240	1.02E+04	3.74E-02
Pu-241	3.22E+06	1.19E+01
Am-241	1.94E+03	6.37E-03
Cm-242	0.00E+00**	1.17E+00
Cm-244	0.00E+00**	7.06E-02
Total	**4.03E+09**	**1.60E+04**

* The activity provided is calculated for 30 days accumulation and includes radioactive decay.

** The source term used to generate the values was specifically designed to maximize radioactivity and external radiation fields in the Reactor Building. The activity values for these particular radionuclides are not included as they are insignificant contributors to the external radiation dose rates from the filters.

PRELIMINARY

Table 12.3-10a

Dose Rates in the Control Building EFU and Adjacent Rooms in Accident Conditions

Position	Room	Thickness (cm)	Dose rate (mSv/hr)
Room 3406 EFU			
Inside, 30 cm below EFU	3406	-	3.39E+00
Lower Slab	3302	50	2.24E-03
Upper Slab	Roof	70	2.42E-05
Behind wall in north direction	3403	30	2.54E-03
Behind wall in east direction	3403	30	8.82E-03
Room 3407 EFU			
Inside, 30 cm below EFU	3407	-	3.39E+00
Lower Slab	3302	50	2.24E-03
Upper Slab	Roof	70	2.42E-05
Behind wall in south direction	3402	30	2.54E-03
Behind wall in east direction	3404	30	8.82E-03

PRELIMINARY

Table 12.3-10b

Dose Rates in the Reactor Building HVAC Filter and Adjacent Rooms in Accident Conditions

Positions	Room	Thickness (cm)	Dose rate (mSv/hr)
Inside, 30 cm below filter	1600	-	1.67E+05
Lower slab	1500	100	1.15E-01
Wall (lid)	1600	60	2.51E+01
		80	1.56E+00
Upper slab	1700, 1710, 1711, 1712, and 1713	100	9.07E-02
Wall (lateral)	1600	60	1.92E+01
		80	1.12E+00

PRELIMINARY

Table 12.3-11

Beyond 72 Hour And Long Term Post Accident Recovery Actions Access Requirements

Room	Long term post accident action required
1311: Electrical Equipment Division 1	Extend systems functionality beyond 72 hr. and long term recovery actions
1313: Remote Shutdown Control Panel Room Division 1	Short presence for back-up or cross checking actuations
1321: Electrical Equipment Division 2	Extend systems functionality beyond 72 hr. and long term recovery actions
1323: Remote Shutdown Control Panel Room Division 2	Short presence for back-up or cross checking actuations
1331: Electrical Equipment Division 3	Extend systems functionality beyond 72 hr. and long term recovery actions
1341: Electrical Equipment Division 4	Extend systems functionality beyond 72 hr. and long term recovery actions.
1703: Standby Liquid Control Pump Room	Long term boron refilling
3275: Control Room	Continuous presence for post accident operation and long term recovery actions
3301: Nonsafety-DCIS Room A	Long term recovery of auxiliary functions
3302: Nonsafety-DCIS Room B	Long term recovery of auxiliary functions
5156: Diesel Generator Control Room A	Long term AC power supply recovery actions
5166: Diesel Generator Control Room B	Long term AC power supply recovery actions
5180: Technical Support Center	Continuous presence for emergency support actions
Health Physics Facility (Counting Room)	Continuous presence for health physics and sampling measurements support actions
1150: RWCU/SDC Valve Room	Post LOCA shutdown cooling
Ancillary Diesel Building	Long term AC power supply recovery actions
Outside: IC/PCCS and Fuel Pool Refill Valve	Long term refilling/makeup of IC/PCCS pools

PRELIMINARY

Table 12.3-12

Radiation Dose Rates At The Post-Accident Access Rooms

Room		Dose rate (mSv/hr)							
		0-0.5 hr	0.5-2 hr	2-8 hr	8-24 hr	24-72 hr	3-4 days	4-7 days	7-30 days
Reactor Building									
RWCU/SDC Valve Room A	1150	2.00E+01	4.19E+02	6.98E+02	3.61E+02	2.10E+02	1.82E+02	1.20E+02	6.82E+00
Electrical Equipment Division 1	1311	2.85E+00	5.96E+01	9.91E+01	5.12E+01	3.00E+01	2.61E+01	1.72E+01	9.30E-01
Remote Shutdown Control Panel Room Division 1	1313	1.22E+00	2.57E+01	4.29E+01	2.22E+01	1.27E+01	1.10E+01	7.25E+00	4.55E-01
Electrical Equipment Division 2	1321	2.74E+00	5.73E+01	9.53E+01	4.92E+01	2.89E+01	2.51E+01	1.66E+01	8.98E-01
Remote Shutdown Control Panel Room Division 2	1323	1.22E+00	2.57E+01	4.29E+01	2.22E+01	1.27E+01	1.10E+01	7.25E+00	4.55E-01
Electrical Equipment Division 3	1331	2.89E+00	6.06E+01	1.01E+01	5.20E+01	3.05E+01	2.65E+01	1.75E+01	9.43E-01
Electrical Equipment Division 4	1341	2.91E+00	6.10E+01	1.01E+01	5.24E+01	3.08E+01	2.67E+01	1.77E+01	9.50E-01
Standby Liquid Control Pump Room	1703	2.06E+01	4.32E+02	7.19E+02	3.72E+02	2.16E+02	1.88E+02	1.24E+02	7.00E+00
Control Building									
DCIS Room A	3301	3.82E-02	3.85E-01	5.71E-01	1.83E-01	8.58E-02	7.37E-02	4.58E-02	1.42E-02
DCIS Room B	3302	3.68E-02	3.70E-01	5.49E-01	1.76E-01	8.25E-02	7.08E-02	4.40E-02	1.37E-02
Electrical Building									
Diesel Generator Control Room A	5251	3.02E-02	3.04E-01	4.51E-01	1.45E-01	6.76E-02	5.79E-02	3.60E-02	1.12E-02
Diesel Generator Control Room B	5261	3.15E-02	3.18E-01	4.71E-01	1.51E-01	7.07E-02	6.05E-02	3.76E-02	1.17E-02
Service Building									
Health Physics Facility	--	4.02E-02	4.05E-01	6.00E-01	1.93E-01	9.03E-02	7.75E-02	4.82E-02	1.50E-02
Hot Chemical Laboratory	--	3.57E-02	3.59E-01	5.33E-01	1.71E-01	8.00E-02	6.87E-02	4.26E-02	1.33E-02
Outside									
IC/PCCS and Fuel Pool Refill Valve	--	1.47E+00	1.47E+01	2.19E+01	7.01E+00	3.32E+00	2.87E+00	1.79E+00	5.51E-01

PRELIMINARY

Table 12.3-13

Radiation Dose Rates At The Access Ways To Post-Accident Access Areas[AH295]

Room		Dose rate (mSv/hr)							
		0-0.5 hr	0.5-2 hr	2-8 hr	8-24 hr	24-72 hr	3-4 days	4-7 days	7-30 days
Reactor Building									
Corridor A	1100	2.24E+01	4.69+02	7.80E+02	4.03E+02	2.35E+02	2.04E+02	1.35E+02	7.52E+00
Corridor B	1101	2.54E+01	5.33E+02	8.85E+02	4.58E+02	2.68E+02	2.32E+02	1.54E+02	8.41E+00
Stairwell B	1191	3.04E+01	6.37E+02	1.06E+03	5.47E+02	3.21E+02	2.79E+02	1.84E+02	9.87E+00
Controlled Equipment Removal Access Room	1308	1.64E+00	3.45E+01	5.74E+01	2.97E+01	1.71E+01	1.49E+01	9.83E+00	5.77E-01
Corridor A Division 3	1730	3.19E+01	6.68E+02	1.11E+03	5.73E+02	3.37E+02	2.93E+02	1.93E+02	1.03E+01
Control Building									
Stairwell B	3192	2.91E-02	2.94E-01	4.35E-01	1.40E-01	6.53E-02	5.59E-02	3.74E-02	1.08E-02
Corridor	3200	3.67E-02	3.70E-01	5.48E-01	1.76E-01	8.24E-02	7.07E-02	4.39E-02	1.36E-02
Corridor	3300	3.12E-02	3.15E-01	4.66E-01	1.50E-01	6.99E-02	5.99E-02	3.72E-02	1.16E-02
Electrical Building									
Corridor	5101	3.60E-02	3.63E-01	5.38E-01	1.73E-01	8.09E-02	6.94E-02	4.31E-02	1.34E-02
Stairwell B	5193	2.96E-02	2.99E-01	4.43E-01	1.42E-01	6.64E-02	5.68E-02	3.53E-02	1.10E-02
Stairwell C	5194	1.88E-02	1.90E-01	2.80E-01	9.02E-02	4.18E-02	3.56E-02	2.21E-02	6.91E-03
Airlock Vestibule 4	5206	1.70E-02	1.72E-01	2.53E-01	8.15E-02	3.77E-02	3.20E-02	1.98E-02	6.23E-03
Tunnel Access									
Clean Personnel Access Tunnel	9101	3.41E-02	3.44E-01	5.09E-01	1.63E-01	7.65E-02	6.56E-02	4.07E-02	1.27E-02
Controlled Personnel Access Tunnel	9201	2.82E-02	2.84E-01	4.21E-01	1.35E-01	6.31E-02	5.40E-02	3.35E-02	1.04E-02
Service Building									
Lobby	--	4.47E-02	4.50E-01	6.68E-01	2.14E-01	1.01E-01	8.64E-02	5.37E-02	1.67E-02
Corridor 1	--	3.68E-02	3.71E-01	5.50E-01	1.76E-01	8.26E-02	7.09E-02	4.40E-02	1.37E-02
Corridor 2	--	2.14E-02	2.16E-01	3.19E-01	1.03E-01	4.77E-02	4.07E-02	2.52E-02	7.89E-03
Corridor 3	--	2.49E-02	2.52E-01	3.72E-01	1.20E-01	5.57E-02	4.76E-02	2.96E-02	9.22E-03
Stairs 1	--	2.42E-02	2.45E-01	3.62E-01	1.16E-01	5.42E-02	4.63E-02	2.87E-02	8.96E-03
Stairs 2	--	2.43E-02	2.45E-01	3.63E-01	1.17E-01	5.43E-02	4.64E-02	2.88E-02	8.99E-03
Stairs 3	--	1.91E-02	1.93E-01	2.86E-01	9.19E-02	4.26E-02	3.62E-02	2.25E-02	7.04E-03

PRELIMINARY

Table 12.3-13

Radiation Dose Rates At The Access Ways To Post-Accident Access Areas[AH295]

Room		Dose rate (mSv/hr)							
		0-0.5 hr	0.5-2 hr	2-8 hr	8-24 hr	24-72 hr	3-4 days	4-7 days	7-30 days
ED Pickup / Return Area	--	4.58E-02	4.62E-01	6.85E-01	2.20E-01	1.03E-01	8.86E-02	5.51E-02	1.71E-02

PRELIMINARY

Table 12.3-14

Reactor Building Post Accident Access Area

Way	Room	Walked distance (m)	Time (min)	Dose (mSv)
Mission at 30 days to Room 1150: RWCU/SDC Valve Room A				
Lobby	--	16.27	0.30	8.23E-05
Stairs 1	--	17.58	0.54	8.05E-05
ED Pickup	--	53.51	0.98	2.78E-04
Health Physics Facility	--	12.41	0.23	3.57E-05
Controlled Personnel Access Tunnel	9201	16.86	0.35	1.19E-04
Stairwell B	1191	41.22	1.29	2.13E-01
Corridor B	1101	17.27	0.31	4.42E-02
Corridor A	1100	9.90	0.18	2.26E-02
RWCU/SDC Valve Room A	1150	39.49	1.22 + 30 (1)	3.68E+00
Corridor A	1100	9.90	0.18	2.26E-02
Corridor B	1101	17.27	0.31	4.42E-02
Stairwell B	1191	41.44	1.57	2.58E-01
Controlled Personnel Access Tunnel	9201	13.90	0.28	9.55E-05
HPF	--	39.23	0.71	1.13E-04
ED Pickup	--	29.72	0.54	1.54E-04
Stairs 1	--	17.75	0.40	5.95E-05
Lobby	--	16.27	0.30	8.23E-05
(1) 30 min time of operation and 0.5 min for opening the door are assumed		**Total dose:**		**4.29E+00**
Way	**Room**	**Walked distance (m)**	**Time (min)**	**Dose (mSv)**
Mission at 72 hours to Room 1311: Electrical Equipment Division 1				
Lobby	--	21.49	0.39	6.56E-04
Corridor 1	--	37.76	0.69	9.48E-04
Stairs 2	--	27.71	0.92	8.29E-04
Corridor 2	--	17.28	0.31	2.50E-04
Clean Personnel Access Tunnel	9101	35.22	0.70	9.00E-04
Electrical Equipment Division 1	1311	60.65	1.11 + 5 (1)	3.06E+00
Clean Personnel Access Tunnel	9101	35.22	0.68	8.77E-04
Corridor 2	--	17.28	0.31	2.50E-04
Stairs 2	--	27.71	1.12	1.02E-03
Corridor 1	--	37.76	0.69	9.48E-04
Lobby	--	21.49	0.39	6.56E-04
(1) 5 minutes time of operation is assumed		**Total dose:**		**3.06E+00**

PRELIMINARY

Table 12.3-14

Reactor Building Post Accident Access Area

Way	Room	Walked distance (m)	Time (min)	Dose (mSv)
Mission at 72 hours to Room 1321: Electrical Equipment Division 2				
Lobby	--	21.49	0.39	6.56E-04
Corridor 1	--	37.76	0.69	9.48E-04
Stairs 2	--	27.71	0.92	8.29E-04
Corridor 2	--	17.28	0.31	2.50E-04
Clean Personnel Access Tunnel	9101	31.02	0.62	8.02E-04
Electrical Equipment Division 3	1331	30.33	0.55	2.81E-01
Controlled Equipment Removal Access Room	1308	8.38	0.15	4.36E-02
Electrical Equipment Division 2	1321	56.51	1.03 + 5 (1)	2.90E+00
Controlled Equipment Removal Access Room	1308	8.38	0.15	4.36E-02
Electrical Equipment Division 3	1331	30.33	0.55	2.81E-01
Clean Personnel Access Tunnel	9101	31.02	0.60	7.78E-04
Corridor 2	--	17.28	0.31	2.50E-04
Stairs 2	--	27.71	1.12	1.33E-04
Corridor 1	--	37.76	0.69	9.48E-04
Lobby	--	21.49	0.39	6.56E-04
(1) 5 minutes time of operation is assumed		**Total dose:**		**3.56E+00**
Way	**Room**	**Walked distance (m)**	**Time (min)**	**Dose (mSv)**
Mission at 72 hours to Room 1331: Electrical Equipment Division 3				
Lobby	--	21.49	0.39	6.56E-04
Corridor 1	--	37.76	0.69	9.48E-04
Stairs 2	--	27.71	0.92	8.29E-04
Corridor 2	--	17.28	0.31	2.50E-04
Clean Personnel Access Tunnel	9101	31.02	0.62	8.02E-04
Electrical Equipment Division 3	1331	60.65	1.11 + 5 (1)	3.11E+00
Clean Personnel Access Tunnel	9101	31.02	0.60	7.78E-04
Corridor 2	--	17.28	0.31	2.50E-04
Stairs 2	--	27.71	1.12	1.02E-03
Corridor 1	--	37.76	0.69	9.48E-04
Lobby	--	21.49	0.39	6.56E-04
(1) 5 minutes time of operation is assumed		**Total dose:**		**3.11E+00**

PRELIMINARY

Table 12.3-14

Reactor Building Post Accident Access Area

Way	Room	Walked distance (m)	Time (min)	Dose (mSv)
Mission at 72 hours to Room 1341: Electrical Equipment Division 4				
Lobby	--	21.49	0.39	3.64E-04
Corridor 1	--	37.76	0.69	1.18E-03
Stairs 2	--	27.71	0.92	1.08E-03
Corridor 2	--	17.28	0.31	3.48E-04
Clean Personal Access Tunnel	9101	35.22	0.70	9.00E-04
Electrical Equipment Division 1	1311	30.33	0.55	2.77E-01
Electrical Equipment Division 4	1341	70.94	1.29 + 5 (1)	3.23E+00
Electrical Equipment Division 1	1311	30.33	0.55	2.77E-01
Clean Personal Access Tunnel	9101	35.22	0.68	8.77E-04
Corridor 2	--	17.28	0.31	3.48E-04
Stairs 2	--	27.71	1.12	1.33E-03
Corridor 1	--	37.76	0.69	1.18E-03
Lobby	--	21.49	0.39	3.64E-05
(1) 5 minutes time of operation is assumed		**Total dose:**		**3.79E+00**
Way	**Room**	**Walked distance (m)**	**Time (min)**	**Dose (mSv)**
Mission at 72 hours to Room 1313: Remote Shutdown Control Panel Room Division 1				
Lobby	--	21.49	0.39	6.56E-04
Corridor 1	--	37.76	0.69	9.48E-04
Stairs 2	--	27.71	0.92	8.29E-04
Corridor 2	--	17.28	0.31	2.50E-04
Clean Personal Access Tunnel	9101	35.22	0.70	9.00E-04
Electrical Equipment Division 1	1311	26.80	0.49	2.45E-01
Remote Shutdown Control Panel Room Division 1	1313	9.92	0.68 + 5 (1)	1.20E+00
Electrical Equipment Division 1	1311	26.80	0.49	2.45E-01
Clean Personal Access Tunnel	9101	35.22	0.68	8.77E-04
Corridor 2	--	17.28	0.31	2.50E-04
Stairs 2	--	27.71	1.12	1.02E-03
Corridor 1	--	37.76	0.69	9.48E-04
Lobby	--	21.49	0.39	6.56E-04
(1) 5 min time of operation and 0.5 min for opening the door are assumed		**Total dose:**		**1.69E+00**

PRELIMINARY

Table 12.3-14

Reactor Building Post Accident Access Area

Way	Room	Walked distance (m)	Time (min)	Dose (mSv)
Mission at 72 hours to Room 1323: Remote Shutdown Control Panel Room Division 2				
Lobby	--	21.49	0.39	6.56E-04
Corridor 1	--	37.76	0.69	9.48E-04
Stairs 2	--	27.71	0.92	8.29E-04
Corridor 2	--	17.28	0.31	2.50E-04
Clean Personal Access Tunnel	9101	31.02	0.62	8.02E-04
Electrical Equipment Division 3	1331	30.33	0.55	2.81E-01
Controlled Equipment Removal Access Room	1308	8.38	0.15	4.36E-02
Electrical Equipment Division 2	1321	6.50	0.12	5.70E-02
Remote Shutdown Control Panel Room Division 2	1323	9.38	0.67 + 5 (1)	1.20E+00
Electrical Equipment Division 2	1321	6.50	0.12	5.70E-02
Controlled Equipment Removal Access Room	1308	8.38	0.15	4.36E-02
Electrical Equipment Division 3	1331	30.33	0.55	2.81E-01
Clean Personal Access Tunnel	9101	31.02	0.60	7.78E-04
Corridor 2	--	17.28	0.31	2.50E-04
Stairs 2	--	27.71	1.12	1.02E-03
Corridor 1	--	37.76	0.69	9.48E-04
Lobby	--	21.49	0.39	6.56E-04
(1) 5 min time of operation and 0.5 min for opening the door are assumed		**Total dose:**		**1.97E+00**
Way	**Room**	**Walked distance (m)**	**Time (min)**	**Dose (mSv)**
Mission at 72 hours to Room 1703: Standby Liquid Control Pump Room				
Lobby	--	16.27	0.30	4.97E-04
Stairs 1	--	17.58	0.54	4.86E-04
ED Pickup	--	53.51	0.98	1.68E-03
Health Physics Facility	--	12.41	0.23	1.86E-04
Controlled Personnel Access Tunnel	9201	16.86	0.35	4.24E-04
Stairwell B	1191	40.07	1.54	8.26E+00
Corridor A Division 3	1730	11.69	0.21	1.52E+00
Standby Liquid Control Pump Room	1703	11.70	0.71 + 5 (1)	2.92E+01
Corridor A Division 3	1730	11.69	0.21	1.52E+00
Stairwell B	1191	40.07	1.27	6.81E+00
Controlled Personnel Access Tunnel	9201	13.90	0.28	3.42E-04
Health Physics Facility	--	39.23	0.71	5.87E-04
ED Pickup	--	29.72	0.54	9.31E-04
Stairs 1	--	17.75	0.66	5.92E-04
Lobby	--	16.27	0.30	4.97E-04
(1) 5 min time of operation and 0.5 min for opening the door are assumed		**Total dose:**		**4.74E+01**

PRELIMINARY

Table 12.3-15

Control Building Post Accident Access Area

Way	Room	Walked distance (m)	Time (min)	Dose (mSv)
Mission at 72 hours to Room 3301: DCIS Room A				
Lobby	--	21.49	0.39	6.56E-04
Corridor 1	--	37.76	0.69	9.48E-04
Stairs 2	--	27.71	0.92	6.94E-04
Corridor 2	--	17.28	0.31	6.09E-04
Clean Personal Access Tunnel	9101	20.59	0.38	9.90E-04
Corridor	3200	19.85	0.36	1.07E-03
Stairwell B	3192	15.03	0.59	8.47E-04
Corridor	3300	42.06	0.77	9.06E-04
DCIS Room A	3301	55.72	1.10 + 5 (1)	8.82E-03
Corridor	3300	42.06	0.77	9.06E-04
Stairwell B	3192	15.03	0.49	8.47E-04
Corridor	3200	19.85	0.36	1.07E-03
Clean Personal Access Tunnel	9101	20.59	0.38	9.90E-04
Corridor 2	--	17.28	0.31	6.09E-04
Stairs 2	-	27.71	1.12	6.94E-04
Corridor 1	--	37.76	0.69	9.48E-04
Lobby	--	21.49	0.39	6.56E-04
(1) 5 minutes time of operation is assumed		**Total dose:**		**2.23E-02**
Way	**Room**	**Walked distance (m)**	**Time (min)**	**Dose (mSv)**
Mission at 72 hours to Room 3302: DCIS Room B				
Lobby	--	21.49	0.39	6.56E-04
Corridor 1	--	37.76	0.69	9.48E-04
Stairs 2	--	27.71	0.92	6.61E-04
Corridor 2	--	17.28	0.31	5.81E-04
Clean Personal Access Tunnel	9101	20.59	0.38	9.43E-04
Corridor	3200	19.85	0.36	1.02E-03
Stairwell B	3192	15.03	0.59	8.07E-04
Corridor	3300	40.07	0.73	8.63E-04
DCIS Room B	3302	65.52	1.28 + 5 (1)	8.74E-03
Corridor	3300	40.07	0.73	4.44E-04
Stairwell B	3192	15.03	0.49	4.14E-04
Corridor	3200	19.85	0.36	5.22E-04
Clean Personal Access Tunnel	9101	20.59	0.38	4.85E-04
Corridor 2	--	17.28	0.31	5.47E-04
Stairs 2	-	27.71	1.12	6.23E-04
Corridor 1	--	37.76	0.69	9.48E-04
Lobby	--	21.49	0.39	6.56E-04
(1) 5 minutes time of operation is assumed		**Total dose:**		**1.98E-02**

PRELIMINARY

Table 12.3-16

Electrical And Service Building Post Accident Access Area

Way	Room	Walked distance (m)	Time (min)	Dose (mSv)
Mission at 72 hours to room 5251: Diesel Generator Room A				
Lobby	--	21.49	0.39	6.56E-04
Corridor 1	--	37.76	0.69	9.48E-04
Stairs 2	--	27.71	0.92	2.89E-05
Corridor 2	--	17.28	0.31	2.54E-05
Clean Personal Access Tunnel	9101	128.79	2.35	4.13E-05
Stairwell C	5194	18.45	0.70	2.23E-05
TSC Corridor	5101	18.796	0.34	4.31E-05
Stairwell B	5193	10.5	0.45	3.53E-05
Airlock Vestibule 4	5206	1.753	0.03	2.01E-05
Diesel Generator Room A	5251	24.036	0.44 + 5 (1)	6.13E-03
Airlock Vestibule 4	5206	1.753	0.03	2.01E-05
Stairwell B	5193	10.5	0.36	3.53E-05
TSC Corridor	5101	18.796	0.34	3.53E-05
Stairwell C	5194	18.448	0.58	2.23E-05
Clean Personal Access Tunnel	9101	128.79	2.35	3.03E-03
Corridor 2	--	17.28	0.31	5.47E-04
Stairs 2	--	27.71	1.12	6.23E-04
Corridor 1	--	37.76	0.69	9.48E-04
Lobby	--	21.49	0.39	6.56E-04
(1) 5 minutes time of operation is assumed		**Total dose:**		**1.39E-02**
Way	**Room**	**Walked distance (m)**	**Time (min)**	**Dose (mSv)**
Mission to the Health Physics Facility (calculated at 8 hours when the dose is the highest)				
Lobby	--	16.27	0.30	3.30E-03
Stairs 1	--	17.58	0.54	3.25E-03
ED Pickup	--	53.51	0.98	1.11E-02
Health Physics Facility	--	54.61	1.00 + 5 (1)	6.00E-02
ED Pickup	--	29.72	0.54	1.11E-02
Stairs 1	--	17.75	0.66	3.25E-03
Lobby	--	16.27	0.30	3.30E-03
(1) 5 minutes time of operation is assumed		**Total dose:**		**9.54E-02**

PRELIMINARY

Table 12.3-16

Electrical And Service Building Post Accident Access Area

Way	Room	Walked distance (m)	Time (min)	Dose (mSv)
Mission at 72 hours to Room 5261: Diesel Generator Room B				
Lobby	--	21.49	0.39	6.56E-04
Corridor 1	--	37.76	0.69	9.48E-04
Stairs 2	--	27.71	0.92	6.02E-04
Corridor 2	--	17.28	0.31	5.28E-05
Clean Personal Access Tunnel	9101	128.79	2.35	8.59E-05
Stairwell C	5194	18.45	0.70	4.63E-05
TSC Corridor	5101	18.796	0.34	8.96E-05
Stairwell B	5193	10.5	0.45	7.35E-05
Airlock Vestibule 4	5206	3.647	0.07	4.17E-05
Diesel Generator Room A	5261	24.036	0.40 + 5 (1)	6.35E-03
Airlock Vestibule 4	5206	3.647	0.07	4.17E-05
Stairwell B	5193	10.5	0.36	7.35E-05
TSC Corridor	5101	18.796	0.34	7.35E-05
Stairwell C	5194	18.448	0.58	4.63E-05
Clean Personal Access Tunnel	9101	128.79	2.35	3.03E-03
Corridor 2	--	17.28	0.31	5.47E-04
Stairs 2	--	27.71	1.12	6.23E-04
Corridor 1	--	37.76	0.69	9.48E-04
Lobby	--	21.49	0.39	6.56E-04
(1) 5 minutes time of operation is assumed		**Total dose:**		**1.45E-02**
Way	**Room**	**Walked distance (m)**	**Time (min)**	**Dose (mSv)**
Mission to the Hot Chemical Laboratory (calculated at 8 hours when the dose is the highest)				
Lobby	--	16.27	0.30	3.30E-03
Stairs 1	--	17.58	0.54	3.25E-03
ED Pickup	--	53.51	0.98	4.41E-04
Health Physics Facility	--	12.41	0.23	3.86E-04
Stairs 3	--	19.48	0.69	1.84E-04
Corridor 3	--	2.12	0.04	2.40E-04
Hot Chemical Laboratory	--	46.63	0.85 + 5 (1)	5.19E-02
Corridor 3	--	2.12	0.04	2.40E-04
Stairs 3	--	19.48	0.58	1.84E-04
Health Physics Facility	--	39.23	0.71	3.86E-04
ED Pickup	--	29.72	0.54	4.41E-04
Stairs 1	--	17.75	0.66	3.25E-03
Lobby	--	16.27	0.30	3.30E-03
(1) 5 minutes time of operation is assumed		**Total dose:**		**6.75E-02**

PRELIMINARY

Table 12.3-17

Outside Area - Post-Accident Radiation Mission Dose At 72 H

Way	Walked distance (m)	Time (min)	Dose (mSv)
IC/PCCS and Fuel Pool Refill Valve	0	20	9.58E-01
Ancillary Diesel Building	0	20	9.58E-01

PRELIMINARY

Table 12.3-18

Regulatory Guide 4.21 Design Objective and Applicable DCD Subsection Information

Design Objective 1: Minimize leaks and spills and provide containment in areas where such events may occur	
DCD Chapter Section/Subsection	**Description of design feature in DCD to meet design objective**
3.1	Design of Structures, Components, Equipment, and Systems: Conformance With NRC General Design Criteria
3.1.2.5 Criterion 14 — Reactor Coolant Pressure Boundary	Piping and equipment pressure parts of the RCPB are assembled and erected by welding unless applicable codes permit flanged or threaded joints. Welding procedures are employed which produce welds of complete fusion that are free of unacceptable defects.
3.4	Design of Structures, Components, Equipment, and Systems: Water Level (Flood) Design
3.4.1.2 Flood Protection From External Sources	These provisions include: • Walls below flood level designed to withstand hydrostatic loads. • Water stops provided in all expansion and construction joints below flood and groundwater levels. • Waterproofing of below flood and groundwater levels external surfaces. • Water seals at pipe penetrations below flood and groundwater levels. • Roofs designed to prevent pooling of large amounts of water in accordance with RG 1.102. • No exterior access openings below grade. The flood protection measures that are described above are not only for external natural floods but also guard against flooding from on-site storage tank rupture. Such tanks are designed and constructed to minimize the risk of catastrophic failure and are located to allow drainage without damage to site facilities.

PRELIMINARY

Table 12.3-18

Regulatory Guide 4.21 Design Objective and Applicable DCD Subsection Information

Design Objective 1: Minimize leaks and spills and provide containment in areas where such events may occur	
DCD Chapter Section/Subsection	**Description of design feature in DCD to meet design objective**
3.4.1.3 Internal Flooding Evaluation Criteria	All safety-related components that affect the safe shutdown of the plant are located in the Reactor Building (RB) and Control Building (CB). Redundant systems and components are physically separated from each other and from nonsafety-related systems. If the failure of a system results in one division being inoperable, a redundant division is available to perform the safe shutdown of the plant. Protective features used to mitigate or eliminate the consequences of internal flooding are: • Structural enclosures or barriers • Curbs and sills • Leakage detection components • Drainage systems Spray damage is avoided by appropriate location of equipment or pipe or by providing protection from water spray. Doors and penetrations rated as 3 hour barriers are assumed to prevent water spray from crossing divisional boundaries
3.4.1.4 Evaluation of Internal Flooding	The RB and CB drain collection system and sumps are designed and separated so that drainage from a flooded compartment containing equipment for a train or division does not flow to compartments containing equipment for another system train or division. Zones that are isolated by watertight doors provide physical separation. Watertight doors between flood divisions have open/close sensors with status indication and alarms in the main control room. The location of the zones prevents two redundant trains from being affected by the flooding at the same time.
3.7	Design of Structures, Components, Equipment, and Systems: Seismic Design
3.7.3.13 Seismic Category I Buried Piping, Conduits and Tunnels	All Seismic Category I utilities (i.e., piping, conduits, or auxiliary system components) that are routed underground are installed in concrete trenches/tunnels or in concrete duct banks in direct contact with the soil. The access tunnel, which includes walkways between and access to RB, CB, TB, SB, and Electrical Building, is classified Seismic Category II. Since Seismic Category II structures are designed to the same criteria as Seismic Category I structures there is no impact to adjacent Seismic Category I structures. The Radwaste Tunnel provides for pipes that transport radioactive waste to the Radwaste Building from RB and TB. The Radwaste Tunnel is classified non-seismic but the structural acceptance criteria are in accordance with RG 1.143 – Safety Class RW-IIa.
3.8	Design of Structures, Components, Equipment, and Systems: Seismic Category I Structures

PRELIMINARY

Table 12.3-18

Regulatory Guide 4.21 Design Objective and Applicable DCD Subsection Information

Design Objective 1: Minimize leaks and spills and provide containment in areas where such events may occur	
DCD Chapter Section/Subsection	**Description of design feature in DCD to meet design objective**
3.8.1.1.1 Concrete Containment	The containment is a low-leakage reinforced concrete structure with an internal steel liner in the drywell and wetwell to serve as a leaktight membrane. The containment and the structures integrated with the containment are constructed of cast-in-place, reinforced concrete.
3.8.1.1.2 Containment Liner Plate	The internal surface of the containment is lined with welded steel plate to form a leaktight barrier. The liner plate is fabricated from carbon steel, except that stainless steel plate or clad is used on wetted surfaces of the wetwell and Gravity-Driven Cooling System (GDCS) pools.
3.8.1.4.1.4 Corrosion Prevention	Type 304L stainless steel or clad carbon steel plate is used for the containment liner in the wetted areas of the suppression pool as protection against any potential pitting and corrosion on all wetted surfaces and at the water-to-air interface area. The suppression pool contains air-saturated, stagnant, high purity water and is designed for a 60-year life. The amount of corrosion is based on the annual temperature profile of suppression pool water for a typical plant in southern states under normal operation. Observations made on suppression pool water quality over a period of several years indicate that periodic pool cleaning such as by underwater vacuuming is required.
3.8.4.2.5 Welding of Pool Liners	All pool liner welds, including the spent fuel pool liner welds, are visually inspected before starting any other NDE method. The visual weld acceptance criteria are defined in AWS Structural Welding Code, D1.1. In accordance with approved procedures, the welded seams of the liner plate are inspected by: • Liquid Penetrant Examinations. To be carried out on all liner plate butt, fillet, corner and tee welds in accordance with ASME, Section V, Article 6 requirements. The acceptance criteria are in accordance with the requirements of ASME Section III, NE-5352. • Helium sniffer test or vacuum box technique in accordance with ASME Section V, Article 10 requirements. Any evidence of leakage is unacceptable.
3.8.6.1 Foundation Waterproofing	The selected waterproofing material for the bottom of the basemat is a chemical crystalline powder that is added to the mud mat mixture forming a waterproof barrier when cured. No membrane waterproofing is used under the foundations in ESBWR.
4.6	Reactor: Functional Design of Reactivity Control System

PRELIMINARY

Table 12.3-18

Regulatory Guide 4.21 Design Objective and Applicable DCD Subsection Information

Design Objective 1: Minimize leaks and spills and provide containment in areas where such events may occur	
DCD Chapter Section/Subsection	**Description of design feature in DCD to meet design objective**
4.6.2.1.4 CRD Maintenance	During removal of the lower housing (spool piece) following removal of the position indicator probes and motor unit, the control rod backseats onto the control rod guide tube. This metal-to-metal contact provides the seal that prevents draining of reactor water when the FMCRD is subsequently lowered out of the CRD housing. The control rod normally remains in this backseated condition at all times with the FMCRD out; however, in the unlikely event it also has to be removed, a temporary blind flange is first installed on the end of the CRD housing to prevent draining of reactor water.
5.2	Reactor Coolant System and Connected Systems: Integrity of Reactor Coolant Pressure Boundary
5.2.1.2 Applicable Code Cases	The reactor pressure vessel (RPV) and appurtenances and the RCPB piping and valves are designed, fabricated, and tested in accordance with the applicable edition of the ASME Boiler & Pressure Vessel Code (ASME Code), Section III, including addenda that were mandatory at the order date for the applicable components.
5.2.5.5 Criteria to Evaluate the Adequacy and Margin of Leak Detection System	For process lines that penetrate the containment, at least two different methods are used for detecting and isolating the leakage for the affected system. The instrumentation is designed to initiate alarms at established leakage limits and isolate the affected systems.
5.3	Reactor Coolant System and Connected Systems: Reactor Vessel
5.3.1.2 Special Procedures Used for Manufacturing and Fabrication	The RPV is constructed primarily from low alloy, high strength steel plate and forgings. All fabrication of the RPV is performed in accordance with GEH approved drawings, fabrication procedures, and test procedures. The shells and vessel heads are made from formed plates or forgings, whereas flanges and nozzles are made from forgings. Welding performed to join these vessel components is in accordance with procedures qualified per ASME Code Section III and IX requirements.
5.4	Reactor Coolant System and Connected Systems: Component and Subsystem Design
5.4.8.1.2 System Description	The system piping routed to the main condenser and LWMS is designed with sufficient wall thickness to ensure the stresses are within the stress limits even if subjected to full reactor pressure. Further, the low-pressure portion of the system is protected by the automatic closure of the overboard flow control valve upon detection of high pressure downstream of the pressure control valve. The system piping routed to the LWMS system is also protected from overpressurization by a pressure relief valve that relieves to the piping routed to the main condenser.

PRELIMINARY

Table 12.3-18

Regulatory Guide 4.21 Design Objective and Applicable DCD Subsection Information

Design Objective 1: Minimize leaks and spills and provide containment in areas where such events may occur	
DCD Chapter Section/Subsection	**Description of design feature in DCD to meet design objective**
5.4.9.2 Description	A main steamline drain subsystem is provided to drain flooded main steamlines after maintenance, to remove steam condensed during heatup and low power operations, and to provide pressure equalization around the outboard MSIVs during startup. The drain lines are routed to orificed headers, which are connected to the condenser hotwell.
6.1	Engineered Safety Features: Design Basis Accident Engineered Safety Feature Materials
6.1.2.1 Protective Coatings	Consistent with the rationale of RG 1.54, the WW and attendant vertical vents are designated as a Service Level I area. All surfaces and equipment in this area are either uncoated, corrosion resistant stainless steel, or coated in accordance with RG 1.54 and referenced ASTM standards, as applicable. Regardless of service level designation, all field applied epoxy coatings inside containment meet the requirements of RG 1.54 and are qualified using the standard ASTM tests, as applicable to procurement, installation, and maintenance.
6.2	Engineered Safety Features: Containment Systems
6.2.4.2.2 Instrument Lines Penetrating Containment	Sensing instrument lines penetrating the containment follow all the recommendations of RG 1.11, as follows: • Each line includes a 6 mm (¼ inch) diameter orifice such that in the event of a piping or component failure, leakage is reduced to the maximum extent practical consistent with other safety requirements. The rate of coolant loss is within the makeup capability, the integrity and functional performance of secondary containment and associated safety systems is maintained and the potential offsite exposure is substantially below the limits of 10 CFR 52.47(a)(2)(iv). • Each line is provided with a self-actuated excess flow check valve located outside containment, as close as practical to the containment. These check valves are designed to remain open as long as the flow through the instrument lines is consistent with normal plant operation; however, if the flow rate is increased to a value representative of a loss of piping integrity outside containment, the valves close. These valves reopen automatically when the pressure in the instrument line is reduced. • The instrument lines are designated as Quality Group B up to and including the isolation valve, located and protected to minimize the likelihood of damage, protected or separated to prevent failure of one line from affecting the others, accessible for inspection and not so restrictive that the response time of the connected instrumentation is affected.
6.5	Engineered Safety Features: Atmosphere Cleanup Systems

PRELIMINARY

Table 12.3-18

Regulatory Guide 4.21 Design Objective and Applicable DCD Subsection Information

Design Objective 1: Minimize leaks and spills and provide containment in areas where such events may occur	
DCD Chapter Section/Subsection	**Description of design feature in DCD to meet design objective**
6.5.2.3 Reactor Building	Leakage through the MSIVs is routed through the main steamline drain lines to the main condenser. These large volumes and surface areas are effective mechanisms to hold up and plate out the relatively low leakage flow. The miscellaneous other penetrations that are based within the RB (for example, RWCU/SDC, FAPCS, RCCWS, etc.) are protected from excess leakage by one of the following methods: (1) Water inventories acting as seals to resist leakage and scrub entrained fission products, (2) Redundant automatic isolation valves, or (3) Closed loop piping systems qualified to maintain their pressure boundary function during the event.
6.5.2.4 Radwaste Building	The radwaste building is designed to contain any liquid releases by locating all high activity tanks in water-tight rooms designed to contain the maximum liquid release for that room. Airborne releases are routed by the Radwaste Building HVAC system (RBVS) through a HEPA filter to the radwaste building stack. Under loss of power conditions, the RBVS is isolated providing hold up of potential releases.
6.5.2.5 Turbine Building	The condensate filter backwash receiving tank is located in a water-tight room which would contain any liquid release for treatment by the radwaste system. Airborne releases are routed via the TB HVAC system (TBVS) to the TB stack.
9.1	Auxiliary Systems: Fuel Storage and Handling
9.1.2.1 Design Bases	GDC 61 - Compliance with GDC 61 is demonstrated by conformance with applicable provisions of RG 1.13. These include design to control airborne release of radioactive material; design of drains, gates, and weirs to prevent drainage of coolant inventory below an adequate shielding depth; provision of adequate coolant flow to spent fuel racks; and a system for detecting and containing spent fuel pool liner leakage. These design features have been included in accordance with the applicable guidance of RG 1.13 and comply with GDC 61 requirements.
9.1.3.2 Fuel and Auxiliary Pools Cooling System Description	With the exception of the suppression pool suction line, anti-siphoning devices are used on all submerged FAPCS piping to prevent unintended drainage of the pools.
9.1.4.11 Under-Vessel Servicing Equipment	The in-core monitoring seal flushing equipment is designed to prevent leakage of primary coolant from in-core detector housings during detector replacement.

PRELIMINARY

Table 12.3-18

Regulatory Guide 4.21 Design Objective and Applicable DCD Subsection Information

Design Objective 1: Minimize leaks and spills and provide containment in areas where such events may occur	
DCD Chapter Section/Subsection	**Description of design feature in DCD to meet design objective**
9.2	Auxiliary Systems: Water Systems
9.2.2.2 Reactor Component Cooling Water System Description	The RCCWS provides cooling water to nonsafety-related components in the Nuclear Island and provides a barrier against radioactive contamination of the PSWS.
9.2.6.1 Condensate Storage and Transfer System Design Bases	The Condensate Storage and Transfer System is designed to: • Provide an enclosed area to retain any tank overflow or leakage until an appropriate disposal action is taken
9.2.6.2 Condensate Storage and Transfer System Description	Condensate Storage Tank: The tank overflows to the enclosed retention area. A basin surrounding the tank is designed to prevent uncontrolled runoff in the event of a tank failure. The enclosed space is sized to contain the total tank capacity. Tank overflow is also collected in this space. A sump is provided inside the retention area with provisions for sampling collected liquids prior to routing them to the Liquid Waste Management System or the storm sewer as per sampling and release requirements. These design features preclude uncontrolled releases to the environment.
9.2.8.1 Turbine Component Cooling Water System Design Bases	The TCCWS utilizes plate and frame type heat exchangers. This design mitigates cross-contamination between TCCWS and the PSWS.
9.3	Auxiliary Systems: Process Auxiliaries
9.3.2.3 Process Sampling System Safety Evaluation	Safety/relief valves, vented to the drain headers, are provided in the stations for high-pressure process streams.

PRELIMINARY

Table 12.3-18

Regulatory Guide 4.21 Design Objective and Applicable DCD Subsection Information

Design Objective 1: Minimize leaks and spills and provide containment in areas where such events may occur	
DCD Chapter Section/Subsection	**Description of design feature in DCD to meet design objective**
9.3.3.1 Equipment and Floor Drain System Design Bases	The EFDS meets requirements of GDC 60 by providing a design to avoid the transfer of contaminated fluids to a non-contaminated drainage system for disposal. Drainage systems are designed to accommodate the maximum anticipated normal volumes of liquid without overflowing including such inputs as the anticipated water flow from a fire hose and other fire suppression water discharges to the area floor drains without impacting the safety function of any safety-related component or system. Systems are designed and arranged to minimize flooding of multiple compartments.
9.3.3.2 Equipment and Floor Drain System Description	The LCW Drain Subsystem collects liquid wastes from equipment drains in potentially contaminated systems. These liquids gravity drain to sumps located in the drywell and other areas. The drywell LCW drain, which is monitored for activity, is pumped to the LCW collection tank. The drywell LCW sump pump discharge line is provided with redundant containment isolation valves. The liquid wastes collected in the LCW sumps are also pumped to the LCW collection tank. The HCW Drain Subsystem collects liquid wastes from floor drains in potentially contaminated areas. These liquids gravity drain to sumps located in the drywell and other areas. The drywell HCW drain, which is monitored for activity, is pumped to the HCW collection tank. The drywell HCW sump pump discharge line is provided with redundant containment isolation valves. Liquids collected in the HCW sumps are also pumped to the HCW collection tank. The Detergent Drain Subsystem collects potentially contaminated wastes from the personnel decontamination stations, laundry, and shower facility drains and transfers them to the detergent drain collection tank. The Chemical Waste Drain Subsystem collects liquid wastes containing potentially contaminated chemicals and corrosive substances from washdown areas, laboratory drains, hot maintenance shop, and other miscellaneous sources in the plant. These liquid wastes are transferred to the chemical drain collection tank. Dedicated sumps in the EFDS collect vent and drain water from the closed loop RCCWS and direct the water to the Reactor Building Cooling Water Drain Subsystem. The size of this subsystem accommodates the draining of the largest isolable cooling water pipe segment in the Reactor Building. The sump contents are evaluated for radioactivity and water quality. If the cooling water is radioactively contaminated, it is directed to the LWMS, where it can be processed. If not, the cooling water may be recycled through a line tied back to the cooling water system.
9.4	Auxiliary Systems: Heating, Ventilation, and Air Conditioning

PRELIMINARY

Table 12.3-18

Regulatory Guide 4.21 Design Objective and Applicable DCD Subsection Information

Design Objective 1: Minimize leaks and spills and provide containment in areas where such events may occur	
DCD Chapter Section/Subsection	**Description of design feature in DCD to meet design objective**
9.4.2.2 Fuel Building HVAC System (FBVS) Description	On detection of high radiation, the Process Radiation Monitoring System provides a signal that trips the FBGAVS and FBFPVS. Each subsystem's supply AHU and exhaust fan shuts down and their associated dampers close. Exhaust air from either subsystem may be manually diverted to the FB HVAC Purge Exhaust Filter Unit. It is then exhausted to the RB/FB vent stack by the FB HVAC Purge Exhaust Filter Unit exhaust fan. Normal ventilation for the area is resumed once the area is decontaminated or the source of radioactivity is removed.
9.4.3.1 Radwaste Building Heating, Ventilating and Air Conditioning System Design Bases	• The RWCRVS maintains the control room areas at a slightly positive pressure (design +31 Pa (+0.125"w.g.)) relative to adjacent areas to minimize infiltration of air. • The RWGAVS maintains the Radwaste Building general area at a slight negative pressure (design -31 Pa (-0.125"w.g.)) relative to adjacent areas and outside atmosphere to prevent the exfiltration of air to adjacent areas. The term "Slightly Negative Pressure" is applied hereafter and represents an allowable pressure range from less than zero to -124 Pa (-0.50"w.g.). Adequate exhaust from the trailer bays is provided to maintain inflow of air from the outside when the truck doors are open. • The RWGAVS is comprised of supply and exhaust subsystems to maintain direction of air flow from personnel occupancy areas towards areas of increasing potential contamination. Exhaust hoods are provided at locations where, under normal operation, contaminants could escape to the surrounding areas. • The RWGAVS provides the capability to exhaust air from the radwaste processing systems. • All exhaust air from the RWGA is discharged to the RWB vent stack. • Redundant components are provided as necessary to increase system reliability, availability and maintainability. • The RWGAVS limits the release of airborne radioactive particulates to the atmosphere by HEPA filtration of the exhaust air from the building prior to discharge to the atmosphere. • The exhaust air is monitored for radiation prior to discharge to atmosphere.

PRELIMINARY

Table 12.3-18

Regulatory Guide 4.21 Design Objective and Applicable DCD Subsection Information

Design Objective 1: Minimize leaks and spills and provide containment in areas where such events may occur	
DCD Chapter Section/Subsection	**Description of design feature in DCD to meet design objective**
9.4.4 Turbine Building HVAC (TBVS) System	The ESBWR: • Meets GDC 60 by suitably controlling the release of gaseous radioactive effluents to the environment. The system directs potentially contaminated building exhaust air to the TBVS system filtration units. Exhaust air from low potential contamination areas is exhausted to the TB vent stack, where it is monitored for radioactive contamination. Exhaust air from high potential contamination areas is filtered using High Efficiency Particulate Air (HEPA) filters before being exhausted to the TB vent stack. The HEPA filters assist in ensuring radioactive material entrained in gaseous effluent will not exceed the limits specified in 10 CFR Part 20, for normal operations and anticipated operational occurrences. TBVS high potential contaminated exhaust subsystems are equipped with HEPA filtration units for localized air cleanup prior to mixing with the main ventilation exhaust (TBE). The local HEPA units are designed, tested and maintained in accordance with Regulatory Guide 1.140. The TBE combined ventilation exhaust is monitored for halogens, particulates and noble gas releases. The TB Compartment area and normal ventilation HVAC PRMS subsystems monitor air for gross radiation levels and alarm functions. The TB is maintained at a slight negative pressure to minimize exfiltration. TB equipment rooms are maintained at a negative pressure to minimize potential airborne radioactivity escaping to adjacent areas or to the outside atmosphere during normal operation by exhausting air through filters from the areas in which a significant potential for contamination exists.
9.4.4.1 Turbine Building HVAC System Design Bases	The TBVS: • Minimizes the possibility of exhaust air recirculation into the air intake • Minimizes the escape of potential airborne radioactivity to the outside atmosphere during normal operation
9.4.4.2 Turbine Building HVAC System Description	Exhaust air from potentially high airborne contamination Turbine Building areas or component vents is collected, filtered, and discharged to the atmosphere through the Turbine Building Compartment Exhaust (TBCE) system. Exhaust air from other (low potential airborne contamination) Turbine Building areas and component vents is exhausted to the atmosphere through the Turbine Building Exhaust (TBE) system. Turbine Building exhaust air is directed to the TB vent stack where it is monitored for radiation prior to being discharged to the atmosphere.

PRELIMINARY

Table 12.3-18

Regulatory Guide 4.21 Design Objective and Applicable DCD Subsection Information

Design Objective 1: Minimize leaks and spills and provide containment in areas where such events may occur	
DCD Chapter Section/Subsection	**Description of design feature in DCD to meet design objective**
9.4.8 Drywell Cooling System	The ESBWR: • Meets GDC 60 by suitably controlling the release of gaseous radioactive effluents to the environment. During normal operation, the DCS re-circulates air with no connection to any HVAC system outside containment. Only during DW purge operations, is the containment air connected with the CONAVS subsystem of RBVS. During DW purge operations, the containment purge fan can be used to discharge containment air to the CONAVS subsystem. The CONAVS system has RB HVAC Purge Exhaust Filter Units that are designed, tested and maintained in accordance with Regulatory Guide 1.140.
9.4.8.2 Drywell Cooling System Description	The DCS is a closed loop recirculating air/nitrogen cooling system with no outside air/nitrogen introduced into the system except during refueling.
10.2	Steam and Power Conversion System: Turbine Generator
10.2.3.4 Turbine Design	• The expected reactor water quality exceeds the turbine manufacturer's requirements for steam and condensate purity.
10.3	Steam and Power Conversion System: Turbine Main Steam System
10.3.2.1 Turbine Main Steam System General Description	Accordingly, the TMSS includes connections that provide controlled water drainage from the main steam lines during various modes of operation. A drain line is connected to the low points of each main steam line, both inside and outside the containment. The drain lines are located at low points in the system, routed to a common header and are connected with isolation valves, as required, to allow drainage to the main condenser. Bypass lines with an orifice are provided around the valves to permit continuous draining of collected condensate from the steam line low points. The steam line drains maintain a downward slope from the steam system low points to the condenser. All horizontal runs of the main steam piping are sloped to the low point at the equalizing header with a slope of at least 1/100 of run, with the exception of the piping upstream of the turbine bypass valves which slopes away from the turbine bypass valves towards the steam source with a slope of at least 1/50 of run. Piping between the bypass valves and condenser is sloped toward the condenser. The drain piping is designed and routed such that non-vertical piping is sloped in the direction of flow with a slope of at least 1/100 of run.
10.4	Steam and Power Conversion System: Other Features of Steam and Power Conversion System

PRELIMINARY

Table 12.3-18

Regulatory Guide 4.21 Design Objective and Applicable DCD Subsection Information

Design Objective 1: Minimize leaks and spills and provide containment in areas where such events may occur	
DCD Chapter Section/Subsection	**Description of design feature in DCD to meet design objective**
10.4.1.2.3 Main Condenser System Operation	The condenser is also designed to receive relief valve discharges and any necessary venting from MSR vessels, feedwater heater shells, gland seal steam header, steam seal regulator, sampling system and various other steam and liquid supply lines. Spray pipes and baffles are designed to provide protection of the condenser tubes and components from high-energy inputs to the condenser. During normal operation, radioactive leakage to the atmosphere via circulating water does not occur because the main condenser shells operate at a vacuum and air leakage is into the shell side of the main condenser.
10.4.3.3 Turbine Gland Seal System Evaluation	Relief valve(s) on the seal steam header prevent excessive seal steam pressure. The valve(s) discharge to the condenser shell.
10.4.7.3 Condensate and Feedwater System Evaluation	The C&FS is designed to minimize leakage with welded construction utilized where practicable. Relief valve discharges and operating vents are channeled through closed systems. If it is necessary to remove a component from service such as a FW heater, pump, or control valve, continued operation of the system is possible by use of the multi-string arrangement and the provisions for isolating and bypassing selected equipment and sections of the system.
11.1	Radioactive Waste Management: Source Terms
11.1.5 Process Leakage Sources	Process leakage results in potential release of noble gases and other volatile fission products via ventilation systems. Liquid from process leaks is collected and routed to the liquid-solid radwaste system. Leakage of fluids from the process system results in the release of radionuclides into plant buildings. In general, the noble radiogases remain airborne and are released to the atmosphere with little delay via the building ventilation exhaust ducts. Other radionuclides partition between air and water and may plate-out on metal surfaces, concrete, and paint. Radioiodines are found in ventilation air as methyl iodide and as inorganic iodine (particulate, elemental, and hypoiodous acid forms). As a consequence of normal steam and water leakage into the drywell, equilibrium drywell concentrations exist during normal operation. Purging of this activity from the drywell to the environment occurs via the Reactor Building Contaminated Area HVAC Subsystem (CONAVS) as described in Subsection 9.4.6.2.
11.2	Radioactive Waste Management: Liquid Waste Management System

PRELIMINARY

Table 12.3-18

Regulatory Guide 4.21 Design Objective and Applicable DCD Subsection Information

Design Objective 1: Minimize leaks and spills and provide containment in areas where such events may occur	
DCD Chapter Section/Subsection	**Description of design feature in DCD to meet design objective**
11.2.1 Liquid Waste Management System Design Bases	All atmospheric liquid radwaste tanks are provided with an overflow connection at least the size of the largest inlet connection. The overflow is connected below the tank vent and above the high-level alarm setpoint. Each collection tank room is designed to contain the maximum liquid inventory in the event that the tank ruptures. Steel tank cubicle liners are utilized to preclude accidental releases to the environment. The radwaste tank cubical walls are sealed and coated.
11.2.2.2 Liquid Waste Management System Operation	The LWMS is operated at atmospheric and greater pressures. Tanks are vented to the atmosphere via the radwaste ventilation system described in Subsection 9.4.3. No condensing vapors are housed to create a vacuum. The vent is also large enough to accommodate the airflow associated with pumping down the tank at a maximum flowrate. Therefore, no adverse conditions are expected.
11.2.2.3.2 Liquid Waste Management System Tanks	All atmospheric liquid radwaste tanks are provided with an overflow connection at least the size of the largest inlet connection. The overflow is connected below the tank vent and above the high-level alarm setpoint. Each collection tank room is designed to contain the maximum liquid inventory in the event that the tank ruptures. Tank cubicles are lined with steel to preclude accidental releases to the environment. Concrete walls are sealed and coated for added protection. Tanks are vented to the radwaste ventilation system.
11.2.4 Liquid Waste Management System Testing and Inspection Requirements	A leak integrity test is performed on the system upon completion. Provisions are made for periodic inspection of major components to ensure capability and integrity of the systems. Process display devices are provided to indicate vital parameters required in routine testing and inspection.
11.3	Radioactive Waste Management: Gaseous Waste Management System
11.3.2.5.10 Offgas System Charcoal Adsorber Bypass	A piping and valving arrangement is provided, which allows isolation and bypass of the charcoal adsorber vessel that may have caught fire or become wetted with water, while continuing to process the offgas flow through the remaining adsorber vessels. The bypass valve arrangement is such that no single valve failure or valve mis-operation would allow total charcoal bypass. The bypass mode of charcoal operation is not normal for power operation. However, it may be used if the resulting activity release is acceptable.

PRELIMINARY

Table 12.3-18

Regulatory Guide 4.21 Design Objective and Applicable DCD Subsection Information

Design Objective 1: Minimize leaks and spills and provide containment in areas where such events may occur	
DCD Chapter Section/Subsection	**Description of design feature in DCD to meet design objective**
11.3.2.6.1 Offgas System Materials	Per RG 1.143 (Reference 11.3-3), Regulatory Position 2, materials for pressure-retaining components of process systems are selected from those covered by the material specifications listed in Section II, Part A of the ASME Boiler and Pressure Vessel Code, except that malleable, wrought or cast-iron materials, and plastic pipe are not allowed in this application. The components satisfy the mandatory requirements of the material specifications with regard to manufacture, examination, repair, testing, identification, and certification.
11.3.2.6.6 Offgas System Valves	No valves controlling the flow of process gas are located in the charcoal adsorber vault. For all valves exposed to process offgas, valve seats are designed to avoid sparks. All valves exposed to process gas have bellows stem seals, double stem seals or equivalent.
11.3.2.6.10 Offgas System Construction of Process Systems	Pressure-retaining components of process systems employ welded construction to the maximum practicable extent. Process piping systems include the first root valve on sample and instrument lines.
11.3.2.6.12 Offgas System Maintenance Access	Design features that reduce leakage and releases of radioactive material include the following: • Extremely stringent leak rate requirements placed upon all equipment, piping and instruments and enforced by requiring helium leak tests of the entire process system as described in Section 11.3.5. • Use of welded joints wherever practicable. • Specification of valve types with extremely low leak rate characteristics (i.e., bellows seal, double stem seal, or equal). • Routing of most drains through loop seals to the main condenser. • Specification of stringent seat-leak characteristics for valves and lines discharging to the environment
11.3.7.1 Radioactive Offgas System Leak or Failure Basis and Assumptions	The system is designed to be detonation resistant, and seismic per Table 3.2-1, and meets all criteria of RG 1.143 (Reference 11.3-3). As such, the failure of a single active component leading to a direct release of radioactive gases to the environment is highly unlikely.
11.4	Radioactive Waste Management: Solid Waste Management System

PRELIMINARY

Table 12.3-18

Regulatory Guide 4.21 Design Objective and Applicable DCD Subsection Information

Design Objective 1: Minimize leaks and spills and provide containment in areas where such events may occur	
DCD Chapter Section/Subsection	**Description of design feature in DCD to meet design objective**
11.4.1 SWMS Design Bases	• The SWMS is designed to prevent the release of significant quantities of radioactive materials to the environment so as to keep the overall exposure to the public within 10 CFR 20 limits and in accordance with the limits specified in 10 CFR 50, Appendix I (Reference 11.4-21). • All atmospheric collection and storage tanks are provided with an overflow connection at least the size of the largest inlet connection. The overflow is connected below the tank vent and above the high-level alarm setpoint. Each tank room is designed to contain the maximum liquid inventory in the event that the tank ruptures.
11.5	Radioactive Waste Management: Process Radiation Monitoring System
11.5.1.1.2 Radiation Monitors Required for Plant Operation	Additional functions include initiation of discharge valve isolation on the offgas or liquid radwaste systems if predetermined release rates would be exceeded, and provision for sampling at certain radiation monitor locations to allow determination of specific radionuclide content.
12.3.1	Radiation Protection: Facility Design Features
12.3.1.1.4 Valves	Valves back seats minimize leakage through the packing. Straight-through valve configurations were selected where practical, over those that exhibit flow discontinuities or internal crevices to minimize crud trapping. Teflon gaskets are not used.
12.3.1.1.7 Floor Drains	Floor drains with appropriately sloped floors are provided in shielded cubicles where the potential for spills exist. Those drain lines having a potential for containing highly radioactive fluids are routed through pipe chases, shielded cubicles, or are embedded in concrete walls and floors. Smooth epoxy-type coatings are employed to facilitate decontamination when a spill does occur.

PRELIMINARY

Table 12.3-18

Regulatory Guide 4.21 Design Objective and Applicable DCD Subsection Information

Design Objective 1: Minimize leaks and spills and provide containment in areas where such events may occur	
DCD Chapter Section/Subsection	**Description of design feature in DCD to meet design objective**
12.3.1.2.6 Contamination Control	Contaminated piping systems are welded to the most practical extent to minimize leaks through screwed or flanged fittings. For systems containing highly radioactive fluids, drains are hard piped directly to equipment drain sumps, rather than to allow contaminated fluid to flow across the floor to a floor drain. Certain valves in the main steam line are also provided with leakage drains piped to equipment drain sumps to reduce contamination of the steam tunnel. Pump casing drains are employed on radioactive systems whenever possible to remove fluids from the pump prior to disassembly. In addition, provisions for flushing with condensate, and in especially contaminated systems, for chemically cleaning the equipment prior to maintenance, are provided. Appropriately sloped floor drains are provided in shielded cubicles and other areas where the potential for a spill exists to limit the extent of contamination. Curbs are also provided to limit contamination and simplify washdown operations. A cask decontamination vault is located in the reactor building where the spent fuel cask and other equipment may be cleaned. The CRD maintenance room is used for disassembling control rod drives to reduce the contamination potential. The radwaste building is seismically designed in accordance with Regulatory Guide 1.143, Class RW-IIa. The tank cubicle concrete is provided with a sealant and a tank cubicle steel liner, as described in Subsection 11.2.2.3 to prevent any potential water releases from high activity areas to the environment. The main equipment washed down in the washdown bays is the spent fuel cask and its transporter. The spent fuel cask is decontaminated in the cask pit (room 21P2). After the spent fuel cask is loaded on the transporter, potential surface contamination is monitored and decontaminated in the washdown bays. Other equipment leaving the plant is also decontaminated inside the plant before loaded onto the transporter, monitored, and washed down if required in the washdown bays before leaving the FB. The washdown bays include the following design features to minimize the spread of contamination: • Walls or curbs located around areas of potential contaminated fluid leakage; • Floor surfaces sloped to drains, and sumps sized for cleanup water flow rate; • Concrete surfaces, including floor surfaces, which have the potential of being flooded or sprayed with radioactive liquid, are protected with a non-porous coating. Epoxy-type wall and floor coverings provide smooth surfaces for ease of decontamination; and • The decontamination fluid is processed through the liquid radwaste system as necessary, per plant operating procedures.

PRELIMINARY

Table 12.3-18

Regulatory Guide 4.21 Design Objective and Applicable DCD Subsection Information

Design Objective 1: Minimize leaks and spills and provide containment in areas where such events may occur	
DCD Chapter Section/Subsection	**Description of design feature in DCD to meet design objective**
12.3.1.4.3 Main Steam System	Providing valve drains that are piped to equipment drain sumps minimizes leakage from selected valves into surrounding areas. Floor drains are provided to minimize the spread of contamination should a leakage occur.

PRELIMINARY

Table 12.3-18
Regulatory Guide 4.21 Design Objective and Applicable DCD Subsection Information

Design Objective 2: Provide for adequate leak detection capability to provide detection of leakage for any SSC which has the potential for leakage	
DCD Chapter Section/Subsection	**Description of design feature in DCD to meet design objective**
3.8	Design of Structures, Components, Equipment, and Systems: Seismic Category I Structures
3.8.4.2.5 Welding of Pool Liners	After construction is finished, each isolated pool is leak tested. The liner welds for all pools outside of the RCCV, including the spent fuel pool, are backed by leak chase channels and a leak detection system to monitor any leakage during plant operation. The leak chase channels are grouped according to the different pool areas and direct any leakage to area drains. This allows both leak detection and determination of where leaks originate.
5.2	Reactor Coolant System and Connected Systems: Integrity of Reactor Coolant Pressure Boundary
5.2.5.5 Criteria to Evaluate the Adequacy and Margin of Leak Detection System	For process lines that penetrate the containment, at least two different methods are used for detecting and isolating the leakage for the affected system. The instrumentation is designed to initiate alarms at established leakage limits and isolate the affected systems.
9.1	Auxiliary Systems: Fuel Storage and Handling
9.1.2.1 Spent Fuel Storage Design Bases	GDC 61 - Compliance with GDC 61 is demonstrated by conformance with applicable provisions of RG 1.13. These include design to control airborne release of radioactive material; design of drains, gates, and weirs to prevent drainage of coolant inventory below an adequate shielding depth; provision of adequate coolant flow to spent fuel racks; and a system for detecting and containing spent fuel pool liner leakage. These design features have been included in accordance with the applicable guidance of RG 1.13 and comply with GDC 61 requirements.

PRELIMINARY

Table 12.3-18
Regulatory Guide 4.21 Design Objective and Applicable DCD Subsection Information

Design Objective 2: Provide for adequate leak detection capability to provide detection of leakage for any SSC which has the potential for leakage	
DCD Chapter Section/Subsection	**Description of design feature in DCD to meet design objective**
9.1.3.2 Fuel and Auxiliary Pools Cooling System Description	The FAPCS is designed to provide for the collection, monitoring, and drainage of pool liner leaks from the spent fuel pools, auxiliary pools, and IC/PCCS pools (refer to Table 9.1-1) to the Liquid Waste Management System. The spent fuel pool is equipped with drainage paths behind the liner welds. These paths are designed to: • Prevent stagnant water buildup behind the liner plate; • Prevent the uncontrolled loss of contaminated pool water; and • Provide liner leak detection and measurement. The reactor well, equipment storage pool, buffer pool, upper and lower fuel transfer pools, cask pool, and IC/PCCS pools are also equipped with stainless steel liners, and shall be equipped with leak detection drains as part of the FAPCS. All leak detection drains are designed to permit free gravity drainage to the Liquid Waste Management System.
9.2	Auxiliary Systems: Water Systems
9.2.1.2 Plant Service Water System Description	Means are provided to detect leakage into the PSWS from the RCCWS, which may contain low levels of radioactivity.
9.2.2.1 RCCWS Design Bases	The RCCWS is designed to limit leakage of radioactive or chemical contamination to the environment.
9.2.6.1 Condensate Storage and Transfer System Design Bases	The Condensate Storage and Transfer System is designed to: • Provide sampling of the retention area sump prior to disposal to determine if the activity of the sump contents is within 10 CFR 20 limits.
11.5	Radioactive Waste Management: Process Radiation Monitoring System

PRELIMINARY

Table 12.3-18
Regulatory Guide 4.21 Design Objective and Applicable DCD Subsection Information

Design Objective 2: Provide for adequate leak detection capability to provide detection of leakage for any SSC which has the potential for leakage	
DCD Chapter Section/Subsection	**Description of design feature in DCD to meet design objective**
11.5 Process Radiation Monitoring System	The Process Radiation Monitoring System (PRMS) allows for determining the content of radioactive material in various gaseous and liquid process and effluent streams. The design objective and criteria are based on the following requirements: • Radiation instrumentation required for safety and protection, and • Radiation instrumentation required for monitoring and plant operation. All radioactive release points/paths within the plant are identified and monitored by this system. All other release points/paths of the plant are located in clean areas where radiological monitoring is not required. This system provides continuous monitoring and display of the radiation measurements during normal, abnormal, and accident conditions.
11.5.1.1.1 Radiation Monitors Required for Safety and Protection	The Radiation Monitoring Subsystems initiates appropriate protective actions to limit the potential release of radioactive materials to the environment if predetermined radiation levels are exceeded in major process/effluent streams. Another objective is to provide plant personnel with indication and alarm of the radiation levels in the major process/effluent streams.

PRELIMINARY

Table 12.3-18
Regulatory Guide 4.21 Design Objective and Applicable DCD Subsection Information

Design Objective 3: Use leak detection methods (e.g., instrumentation, automated samplers) capable of early detection of leaks in areas where it is difficult or impossible to conduct regular inspections (such as for spent fuel pools, tanks that are in contact with the ground and buried, embedded, or subterranean piping) to avoid release of contamination from undetected leaks and to minimize contamination of the environment.	
DCD Chapter Section/Subsection	**Description of design feature in DCD to meet design objective**
3.8	Design of Structures, Components, Equipment, and Systems: Seismic Category I Structures
3.8.4.2.5 Welding of Pool Liners	The leak chase channels are grouped according to the different pool areas and direct any leakage to area drains. This allows both leak detection and determination of where leaks originate. The functioning of the leak chase channels are checked prior to completion of the pool liner installation.
5.2	Reactor Coolant System and Connected Systems: Integrity of Reactor Coolant Pressure Boundary
5.2.5.2 Leak Detection Instrumentation and Monitoring	The plant variables monitored for leakage are summarized in Tables 5.2-6 and 5.2-7 for areas within and outside the containment. The automatic LD&IS isolation functions that are provided for detection and isolation of gross leakage within the plant are identified in Table 5.2-6. The leakage parameters of the plant that are monitored and annunciated in the main control room are identified in Table 5.2-7.
5.2.5.5 Criteria to Evaluate the Adequacy and Margin of Leak Detection System	For process lines that penetrate the containment, at least two different methods are used for detecting and isolating the leakage for the affected system. The instrumentation is designed to initiate alarms at established leakage limits and isolate the affected systems.
9.1	Auxiliary Systems: Fuel Storage and Handling
9.1.2.1 Spent Fuel Storage Design Bases	GDC 61 - Compliance with GDC 61 is demonstrated by conformance with applicable provisions of RG 1.13. These include design to control airborne release of radioactive material; design of drains, gates, and weirs to prevent drainage of coolant inventory below an adequate shielding depth; provision of adequate coolant flow to spent fuel racks; and a system for detecting and containing spent fuel pool liner leakage. These design features have been included in accordance with the applicable guidance of RG 1.13 and comply with GDC 61 requirements.

PRELIMINARY

Table 12.3-18
Regulatory Guide 4.21 Design Objective and Applicable DCD Subsection Information

Design Objective 3: Use leak detection methods (e.g., instrumentation, automated samplers) capable of early detection of leaks in areas where it is difficult or impossible to conduct regular inspections (such as for spent fuel pools, tanks that are in contact with the ground and buried, embedded, or subterranean piping) to avoid release of contamination from undetected leaks and to minimize contamination of the environment.	
DCD Chapter Section/Subsection	**Description of design feature in DCD to meet design objective**
9.1.3.2 Fuel and Auxiliary Pools Cooling System Description	The spent fuel pool is equipped with drainage paths behind the liner welds. These paths are designed to: • Prevent stagnant water buildup behind the liner plate; • Prevent the uncontrolled loss of contaminated pool water; and • Provide liner leak detection and measurement. The reactor well, equipment storage pool, buffer pool, upper and lower fuel transfer pools, cask pool, and IC/PCCS pools are also equipped with stainless steel liners, and shall be equipped with leak detection drains as part of the FAPCS. All leak detection drains are designed to permit free gravity drainage to the Liquid Waste Management System.
9.1.3.5 Fuel and Auxiliary Pools Cooling System Instrumentation and Control	The SFP and IC/PCCS pools contain backup nonsafety-related resistive type level indicators that can be operated using portable onsite power supplies to indicate when the pools have been replenished to their normal water level. All other pools (upper transfer pool, lower fuel transfer pool, cask pool, buffer pool, reactor well, dryer and separator storage pool) have local, nonsafety-related, panel-mounted level transmitters to provide signals for high/low-level alarms in the MCR.
9.2	Auxiliary Systems: Water Systems
9.2.2.5 Reactor Component Cooling Water System Instrumentation Requirements	RCCWS radiation monitors are provided for monitoring radiation levels and alerting the plant operator of abnormal radiation levels.
9.2.6.5 Condensate Storage and Transfer System Instrumentation Requirements	The makeup water control valve level transmitters control the CST water level. An alarm is initiated if the CST level decreases below the level that opens the makeup water valve. An alarm actuates in the MCR if the CST water level increases above the level that isolates makeup water to the tank. This alarm point is lower than the overflow level. CST level indication is provided in the MCR.
9.3	Auxiliary Systems: Process Auxiliaries

PRELIMINARY

Table 12.3-18
Regulatory Guide 4.21 Design Objective and Applicable DCD Subsection Information

Design Objective 3: Use leak detection methods (e.g., instrumentation, automated samplers) capable of early detection of leaks in areas where it is difficult or impossible to conduct regular inspections (such as for spent fuel pools, tanks that are in contact with the ground and buried, embedded, or subterranean piping) to avoid release of contamination from undetected leaks and to minimize contamination of the environment.	
DCD Chapter Section/Subsection	**Description of design feature in DCD to meet design objective**
9.3.2.2 Process Sampling System Description	Facilities for grab sampling and special monitoring are provided. Continuous samples are diverted to continuous monitoring equipment. The continuous monitoring equipment transmits signals to the plant computer located in the Main Control Room (MCR). Alarms are provided for indicating off-normal conditions. The sample station's effluents are returned to an appropriate process stream or to the radwaste drain headers through a common return line. ALARA is considered in station layout and design.
9.3.3.5 Equipment and Floor Drain System Instrumentation Requirements	Leaks in the drywell are detected by monitoring the rate of increase of the sump level. This function is provided by the Leak Detection and Isolation System as described in Subsection 5.2.5. Leak detection in other areas is accomplished by monitoring the frequency and duration of sump pump operation.
9.4	Auxiliary Systems: Heating, Ventilation, and Air Conditioning
9.4.4.2 Turbine Building HVAC System Description	The TBCE subsystem has radiation detectors in the exhaust duct to monitor the air for radioactivity prior to its being discharged to the TB vent stack.
9.4.6 Reactor Building HVAC System	The ESBWR: Meets GDC 60 by suitably controlling the release of gaseous radioactive effluents to the environment. The system may direct its exhaust air to the Reactor Building HVAC Purge Exhaust Filter Unit during periods of high radioactivity. The Reactor Building HVAC Purge Exhaust Filter Unit is designed, tested and maintained in accordance with Regulatory Guide 1.140. The RBVS (CONAVS and REPAVS) exhaust subsystems are equipped with control systems to automatically isolate the effluent on indication of a high radiation level. The RB boundary isolation dampers (CONAVS and REPAVS) close on receipt of a high radiation signal, or on a loss of AC power.
10.4	Steam and Power Conversion System: Other Features of Steam and Power Conversion System

PRELIMINARY

Table 12.3-18
Regulatory Guide 4.21 Design Objective and Applicable DCD Subsection Information

Design Objective 3: Use leak detection methods (e.g., instrumentation, automated samplers) capable of early detection of leaks in areas where it is difficult or impossible to conduct regular inspections (such as for spent fuel pools, tanks that are in contact with the ground and buried, embedded, or subterranean piping) to avoid release of contamination from undetected leaks and to minimize contamination of the environment.	
DCD Chapter Section/Subsection	**Description of design feature in DCD to meet design objective**
10.4.2.2 Main Condenser Evacuation System Description	Process Radiation Monitoring System (PRMS) radiation detectors in the TBCE system and vent stack produce an alarm in the main control room if abnormal radioactivity is detected (Section 11.5). Radiation monitors are provided on the main steam lines, to trip and isolate the mechanical vacuum pump(s) if abnormal radioactivity is detected in the steam being supplied to the condenser.
10.4.3.5.1.4 Turbine Gland Seal System Effluent Monitoring	The TGSS effluents are normally monitored by a system-dedicated radiation monitor installed on the gland steam condenser exhauster blower discharge. High monitor readings are alarmed in the main control room. The system effluents are then discharged to the TBCE subsystem and the vent stack, where further effluent radiation monitoring is performed (Section 12.2 for the radiological analysis of the TGSS effluents).
10.4.5.6 Circulating Water System Flood Protection	Level switches are provided in the Turbine Building to trip the CIRC pumps and close the required valves in case of a CIRC system component failure. The flooding signal initiates from a high water level detection. In the hypothetical situation of a circulating water system pipe or expansion joint failure, if not detected and isolated, the water discharged would cause internal Turbine Building flooding above grade level, with excess water potentially spilling over on site. If a failure occurred within a condensate system (condenser shell side), the resulting flood level would be below grade level due to the relatively small hotwell inventory relative to the Turbine Building capacity.
11.2	Radioactive Waste Management: Liquid Waste Management System
11.2.2.1 Liquid Waste Management System Summary Description	Provisions for sampling at important process points are included. Protection against accidental discharge is provided by detection and alarm of abnormal conditions and by administrative controls.
11.2.3.2 Liquid Waste Management System Radioactive Releases	All radioactive releases will be discharged to the circulating water system. Prior to discharging to the environment, the contents of the tank being released are sampled and analyzed to ensure that the activity concentration is consistent with the discharge criteria of 10 CFR 20 (Reference 11.2-2) and dose commitment in 10 CFR 50, Appendix I (Reference 11.2-6). A radiation monitor provides an automatic closure signal to the discharge line isolation valve.
11.3	Radioactive Waste Management: Gaseous Waste Management System

PRELIMINARY

Table 12.3-18
Regulatory Guide 4.21 Design Objective and Applicable DCD Subsection Information

Design Objective 3: Use leak detection methods (e.g., instrumentation, automated samplers) capable of early detection of leaks in areas where it is difficult or impossible to conduct regular inspections (such as for spent fuel pools, tanks that are in contact with the ground and buried, embedded, or subterranean piping) to avoid release of contamination from undetected leaks and to minimize contamination of the environment.	
DCD Chapter Section/Subsection	**Description of design feature in DCD to meet design objective**
11.3.2.5.9 Offgas System Redundancy	Design provisions are incorporated that preclude the uncontrolled release of radioactivity to the environment as a result of a single equipment failure, short of the equipment failure accident described in Subsection 11.3.7. An analysis of single equipment piece malfunctions is provided in Table 11.3-3. Design precautions taken to prevent uncontrolled releases of activity include the following: • All discharge paths to the environment are monitored. The Process Radiation Monitoring System (PRMS) monitors the normal effluent path and the Area Radiation Monitoring System monitors the equipment areas. • Dilution steam flow to the SJAE is monitored and alarmed, and the valving is required to be such that loss of dilution steam cannot occur without coincident closure of the process gas suction valve(s) so that the process gas is sufficiently diluted if it is flowing at all.
11.5	Radioactive Waste Management: Process Radiation Monitoring System
11.5.3.1.2 Reactor Building HVAC Exhaust Radiation Monitoring Subsystem	The detectors are physically located upstream of the ventilation exhaust duct isolation dampers such that closure of the dampers can be accomplished prior to exceeding radioactive effluent limits imposed by 10 CFR 20, Appendix B.
11.5.3.1.6 Isolation Condenser Vent Exhaust	The air space above the pool that contains the isolation condenser is exhausted to atmosphere through large-diameter discharge vents after first passing through a large face area passive-type steam dryer. Moisture removed by the dryer from the boil-off steam is ducted back to the IC pool. Each ventilation path, from the air space above the pool in which the isolation condenser is submerged, is monitored for radioactivity by a series of radiation monitors. Upon detection of radioactivity escaping the pool, as might be the case from a leak from the isolation condenser, the radiation monitors initiate closure of the containment isolation valves for the affected condenser. A closure setpoint is calculated to ensure isolation of the condenser prior to exceeding the applicable offsite regulatory guidelines (Subsections 11.5.4.4 and 11.5.4.5).

PRELIMINARY

Table 12.3-18
Regulatory Guide 4.21 Design Objective and Applicable DCD Subsection Information

Design Objective 3: Use leak detection methods (e.g., instrumentation, automated samplers) capable of early detection of leaks in areas where it is difficult or impossible to conduct regular inspections (such as for spent fuel pools, tanks that are in contact with the ground and buried, embedded, or subterranean piping) to avoid release of contamination from undetected leaks and to minimize contamination of the environment.	
DCD Chapter Section/Subsection	**Description of design feature in DCD to meet design objective**
11.5.3.1.9 Containment Purge Exhaust	The detectors are located adjacent to the exhaust ducting upstream of the ventilating system isolation valves. The detectors are physically located upstream of the ventilation exhaust duct isolation dampers such that closure of the dampers can be accomplished prior to exceeding radioactive effluent limits. The subsystem consists of four redundant instrument channels. Each channel consists of a gamma-sensitive detector and a MCR radiation monitor.
11.5.3.2.1 Offgas Pre-treatment	A continuous sample is extracted from the offgas pipe, then passed through a sample chamber and a sample panel before being returned to the suction side of the SJAE. The sample chamber is a stainless steel pipe that is internally polished to minimize plate-out. It can be purged with room air to check detector response to background radiation. Sample line flow is measured and indicated on the sample panel. A gamma-sensitive detector, positioned on the sample chamber, is connected to a local radiation monitor. The radiation level reading can be directly correlated to the concentration of the noble gases in the sample chamber by obtaining a grab sample at the sample panel. The sample is then removed and the sample is analyzed with a multi-channel gamma pulse height analyzer to determine the concentration of the various noble gas radionuclides. A correlation between the observed activity and the monitor reading permits calibration of the monitor.
11.5.3.2.2 Offgas Post-treatment	This subsystem monitors radioactivity for halogens, particulates and noble gas releases during normal and accident conditions in the offgas piping downstream of the OGS charcoal adsorbers and upstream of the OGS discharge valve. A continuous sample is extracted from the OGS piping, passed through two offgas post-treatment samplers for monitoring and sampling, and returned to the OGS piping. One sampler contains provisions for continuous gaseous, particulate and halogen radioactivity monitoring of the offgas post treatment process. The second sampler contains only provisions for continuous gaseous monitoring.

PRELIMINARY

Table 12.3-18
Regulatory Guide 4.21 Design Objective and Applicable DCD Subsection Information

Design Objective 3: Use leak detection methods (e.g., instrumentation, automated samplers) capable of early detection of leaks in areas where it is difficult or impossible to conduct regular inspections (such as for spent fuel pools, tanks that are in contact with the ground and buried, embedded, or subterranean piping) to avoid release of contamination from undetected leaks and to minimize contamination of the environment.	
DCD Chapter Section/Subsection	**Description of design feature in DCD to meet design objective**
11.5.3.2.4 Turbine Building Combined Ventilation Exhaust	A representative sample is continuously extracted and passed through the sample panel for monitoring and sampling, and then returned to the TB Combined Ventilation Exhaust stream. Sampling is performed in accordance with ANSI/HPS N13.1 (Reference 11.5-13). Automatic compensation for variation in flow is provided to maintain the sample panel flow proportional to the main flow. The radiation detector assembly consists of shielded gas chambers that house gamma-beta sensitive detectors and check sources. A local radiation monitor analyzes and visually displays the measured radiation level. The subsystem has provisions for purging the sample panel with room air to check detector response to background radiation level reading.
11.5.3.2.16 Drywell Sumps LCW/HCW Discharge	This subsystem monitors the gross radiation level in the liquid waste transferred in the drain line from the drywell LCW and HCW sumps to the Radwaste System. Automatic sump pump trips occur if high radiation levels are detected during liquid radwaste transfers.

PRELIMINARY

Table 12.3-18
Regulatory Guide 4.21 Design Objective and Applicable DCD Subsection Information

Design Objective 4: Reduce the need to decontaminate equipment and structures by decreasing the probability of any release, reducing any amounts released, and decreasing the spread of the contaminant from the source.	
DCD Chapter Section/Subsection	**Description of design feature in DCD to meet design objective**
3.8	Design of Structures, Components, Equipment, and Systems: Seismic Category I Structures
3.8.4.1.7 Seismic Category I HVAC Ducts and HVAC Duct Supports	HVAC ducts are made of steel sheet metal and are supported at intervals by supports made of hot or cold rolled steel sections.
4.1	Reactor: Summary Description
4.1.2 Reactor Internal Components	Except for the Zircaloy in the reactor core, these reactor internals are stress corrosion-resistant stainless steels or other high alloy steels.
4.2	Reactor: Fuel System Design
4.2.1.1.4 Cladding Corrosion and Corrosion Product Buildup	Zircaloy cladding tubes undergo oxidation at slow rates during normal reactor operation and reactor water corrosion products (crud) are deposited on the cladding outside surface (Reference 4.2-10). The cladding oxidation causes thinning of the cladding tube wall and introduces a resistance to the fuel rod-to-coolant heat transfer. Crud buildup can also introduce a resistance to heat transfer. The expected extent of the oxidation and the buildup of the corrosion products is specifically considered in the fuel rod design analyses. Thus the impacts of the temperature increase, the correspondingly altered material properties and the thinning of the cladding wall resulting from cladding corrosion on fuel rod behavior relative to impacted design criteria (such as fuel temperature and cladding strain) are explicitly addressed.
4.2.4.8 Materials	Materials selected for use in the Marathon control rod components are chosen to minimize the component end-of-life radioactivity in order to reduce personnel exposure during handling on-site, and for final offsite shipping and burial. All Marathon control rod materials are less than 0.03 weight percent cobalt. The average niobium content for the handle and absorber section, less boron carbide and hafnium, is less than 0.1 weight percent.
5	Reactor Coolant System and Connected Systems:
5.1 Summary Description	The RWCU/SDC recirculates a portion of reactor coolant through a demineralizer to remove dissolved impurities with their associated corrosion and fission products from the reactor coolant.

PRELIMINARY

Table 12.3-18
Regulatory Guide 4.21 Design Objective and Applicable DCD Subsection Information

Design Objective 4: Reduce the need to decontaminate equipment and structures by decreasing the probability of any release, reducing any amounts released, and decreasing the spread of the contaminant from the source.	
DCD Chapter Section/Subsection	**Description of design feature in DCD to meet design objective**
5.2	Reactor Coolant System and Connected Systems: Integrity of Reactor Coolant Pressure Boundary
5.2.2.2.2 Equipment and Component Description	Each discharge stack has a drain line that drains condensed steam leakage to the suppression pool and is routed to a submerged discharge location in a wetwell vent to suppress any steam discharge.
5.2.3.2 Compatibility with Reactor Coolant	General corrosion and stress corrosion cracking induced by impurities in the reactor coolant can cause failures of the RCPB. The chemistry of the reactor coolant and any additives whose function is to control corrosion are reviewed in Subsections 5.4.8, 9.3.9 and 9.3.10. The compatibility of the materials of construction employed in the RCPB with the reactor coolant, contaminants, or radiolytic products to which the system is exposed has been considered. The extent of the corrosion of ferritic low alloy steels and carbon steels in contact with the reactor coolant has been considered. Similarly, consideration has been given to uses of austenitic stainless steels in the sensitized condition. Special attention has been given to the use of austenitic stainless steels in any condition in BWRs considering the oxygen content of BWR coolant.
5.2.3.2.3 Compatibility of Construction Materials with Reactor Coolant	Contaminants in the reactor coolant are controlled to very low limits. These controls are implemented by limiting contaminant levels of elements (such as halogens, S, Pb) to as low as possible in miscellaneous materials used during fabrication and installation. These materials (such as tapes, penetrants) are completely removed and cleanliness is assured. Lubricant and gasket materials that remain in contact with the coolant during operation are evaluated on that basis. No detrimental effects occur on any of the materials from allowable contaminant levels in the high purity reactor coolant. Expected radiolytic products in the BWR coolant have no adverse effects on the construction materials.
5.2.3.3.2 Control of Welding	Low-alloy steel is used only in RPV and feedwater piping. Other ferritic components in the RCPB are fabricated from carbon steel materials.
5.2.3.4 Fabrication and Processing of Austenitic Stainless Steels	Austenitic stainless steels in a variety of product forms are used for construction of a limited number of pressure-retaining components in the RCPB.
5.3	Reactor Coolant System and Connected Systems: Reactor Vessel
5.3.3.2.1 Summary Description	The cylindrical shell and top and bottom heads of the RPV are fabricated of low alloy steel, the interior of which is clad with stainless steel weld overlay, except for the top head and most nozzles. The main steam nozzles are clad with stainless steel weld overlay. The bottom head is clad with Ni-Cr-Fe alloy.

PRELIMINARY

Table 12.3-18
Regulatory Guide 4.21 Design Objective and Applicable DCD Subsection Information

Design Objective 4: Reduce the need to decontaminate equipment and structures by decreasing the probability of any release, reducing any amounts released, and decreasing the spread of the contaminant from the source.	
DCD Chapter Section/Subsection	**Description of design feature in DCD to meet design objective**
5.3.3.2.2 Reactor Vessel Design Data	(In Core Neutron Flux Monitor Housings)The housings are fabricated of low carbon austenitic stainless steel and are designed in accordance with ASME Section III, Subsection NB. The RPV insulation is reflective metal type, constructed entirely of series 300 stainless steel and designed for a 60-year life.
5.4	Reactor Coolant System and Connected Systems: Component and Subsystem Design
5.4.8.1.1 RWCU/SDC Design Bases	The RWCU/SDC system is designed to: • Remove solid and dissolved impurities from the reactor coolant and measure the reactor water conductivity during all modes of reactor operation. This is done in accordance with RG 1.56, "Maintenance of Water Purity in Boiling Water Reactors." • Enable unit operation within the guidelines of EPRI's "BWRVIP-130: BWR Vessel and Internals Project BWR Water Chemistry Guidelines."
5.4.8.1.2 RWCU/SDC System Description	The following RWCU/SDC system piping and components are constructed of stainless steel: • Bottom suction line up to and including the outboard containment isolation valve; • Bottom suction sampling line up to and including the outboard containment isolation valve; • Pump suction lines from pump suction valves up to and including the Demineralizer downstream isolation valve and demineralizer bypass valve; • Pumps; and • Demineralizer. The remainder of the system is constructed of carbon steel. Resin breakthrough to the reactor is prevented by a strainer in the demineralizer outlet line to catch the resin beads. The resin transfer system is designed to prevent resin traps in sluice lines. Consideration is given in the design to avoid resins collecting in valves, low points or stagnant areas. Interlocks are provided to prevent inadvertent opening of the demineralizer resin addition and backflushing valves during normal operation.

PRELIMINARY

Table 12.3-18
Regulatory Guide 4.21 Design Objective and Applicable DCD Subsection Information

Design Objective 4: Reduce the need to decontaminate equipment and structures by decreasing the probability of any release, reducing any amounts released, and decreasing the spread of the contaminant from the source.	
DCD Chapter Section/Subsection	**Description of design feature in DCD to meet design objective**
6.1	Engineered Safety Features: Design Basis Accident Engineered Safety Feature Materials
6.1.2.1 Protective Coatings	Consistent with the rationale of RG 1.54, the WW and attendant vertical vents are designated as a Service Level I area. All surfaces and equipment in this area are either uncoated, corrosion resistant stainless steel, or coated in accordance with RG 1.54 and referenced ASTM standards, as applicable. Regardless of service level designation, all field applied epoxy coatings inside containment meet the requirements of RG 1.54 and are qualified using the standard ASTM tests, as applicable to procurement, installation, and maintenance.
6.2	Engineered Safety Features: Containment Systems
6.2.3 Reactor Building Functional Design	During normal plant operation, potentially contaminated areas within the RB are kept at a negative pressure with respect to the environment while clean areas are maintained at positive pressure. The ESBWR does not need, and thus has no filter system that performs a safety-related function following a design basis accident, as discussed in Subsection 6.5.2.3.
6.2.4.3.2.2 Effluent Lines from Containment	Process Radiation Monitoring System - The penetrations for the fission products monitor sampling lines consist of one sampling line and one return line. Each of these two lines contains an inboard and outboard valve. These two valves are pneumatic, solenoid or equivalent power operated valves and are used for isolation. These isolation valves will fail as-is.
6.5	Engineered Safety Features: Atmosphere Cleanup Systems

PRELIMINARY

Table 12.3-18
Regulatory Guide 4.21 Design Objective and Applicable DCD Subsection Information

Design Objective 4: Reduce the need to decontaminate equipment and structures by decreasing the probability of any release, reducing any amounts released, and decreasing the spread of the contaminant from the source.	
DCD Chapter Section/Subsection	**Description of design feature in DCD to meet design objective**
6.5.2.3 Reactor Building	Under normal conditions, the contaminated areas (CONAVS and REPAVS subsections) air flow is maintained from clean to potentially contaminated areas and then routed via the respective RB HVAC subsystem to the RB/FB vent stack. The controlled (CONAVS served) area of the RB surrounds most of the containment (except feedwater and MSIV containment penetrations located in the main steam tunnel) and provides a barrier for airborne leakage of fission products resulting from containment leakage including containment penetrations. Toward this end, most penetrations into the containment (with the exception of the main steam lines, the feedwater lines, the ICs, and miscellaneous other penetrations) terminate in this volume. The second isolation valves on all GDC 54 lines (with the exception of the IC containment isolation valves) are found in this volume such that any potential valve leakage as well as penetration leakage collects in here. The CONAVS area of the RB under accident conditions is automatically isolated or passively sealed (for example, water loop seals) to provide a hold up barrier. When isolated, the RB can be serviced by the HEPA and charcoal filtration systems of the RB HVAC Accident Exhaust Filter Unit (Subsection 9.4.6). With low leakage and stagnant conditions, hold up mechanisms perform the basic mitigating functions.
9.1	Auxiliary Systems: Fuel Storage and Handling
9.1.1.4 New Fuel Storage Material Considerations	Material used in the fabrication of the new fuel storage racks is limited to the use of stainless steel in accordance with the latest issue of the applicable ASTM specifications at the time of equipment order. The new fuel racks are fabricated from Type 304L stainless steel, which conforms to ASTM A240/A240M. The appropriate weld wire for the Type 304L components (E308L or ER308L) is utilized in the fabrication process. Materials are chosen for their corrosion resistance and their ability to be formed and welded with consistent quality.
9.1.2.4 Spent Fuel Storage Mechanical and Structural Design	The Spent Fuel Pool and buffer pool are reinforced concrete structures with a stainless steel liner. Materials used for construction are specified in accordance with the latest issue of applicable ASTM specifications at the time of equipment order. The racks are constructed in accordance with the quality assurance requirements of 10 CFR 50, Appendix B.

PRELIMINARY

Table 12.3-18
Regulatory Guide 4.21 Design Objective and Applicable DCD Subsection Information

Design Objective 4: Reduce the need to decontaminate equipment and structures by decreasing the probability of any release, reducing any amounts released, and decreasing the spread of the contaminant from the source.	
DCD Chapter Section/Subsection	**Description of design feature in DCD to meet design objective**
9.1.2.6 Spent Fuel Storage Material Considerations	Material used in the fabrication of the spent fuel storage racks is limited to the use of stainless steel in accordance with the latest issue of the applicable ASTM specifications at the time of equipment order. The spent fuel rack ends are fabricated from Type 304L stainless steel, which conforms to ASTM A240/A240M. The appropriate weld wire for the Type 304L components (E308L or ER308L) is utilized in the fabrication process. The interlocking panels that form the fuel element storage matrix are fabricated from Type 304B7 borated stainless steel, which conforms to ASTM A 887 (UNS Designation S30467, Grade B, 1.75-2.25% boron inclusion). There is no welding of borated stainless steel. Fuel rack feet are fabricated from Type 630 (17-4PH) age-hardened stainless steel, which conforms to ASTM A564/A564M. Materials are chosen for their corrosion resistance and their ability to be formed and welded with consistent quality. The storage tube material is permanently marked with identification traceable to the material certifications. The fuel storage tube assembly is compatible with the environment of treated water and provides a design life of 60 years.
9.1.3.2 Fuel and Auxiliary Pools Cooling System Description	Each water treatment unit is equipped with a prefilter, a demineralizer and a post strainer. A bypass line is provided to permit bypass of the water treatment unit, when necessary. To protect demineralizer resin, the water treatment units are bypassed automatically on a high temperature signal. The prefilter and demineralizers of the water treatment units are located in shielding cells so that radiation exposure of plant personnel is within acceptable limits. Proper physical separation is provided between the active components of the two redundant trains to assure operation of one train in the event of failure of the other train. Any leakage of high-pressure coolant through the safety-related check valves is discharged through the pressure relief valve and measured before being sent to the Liquid Waste Management System. Redundant valves are contained in separate fire zones for improved reliability. All FAPCS lines penetrating the containment that do not have a post-accident recovery function are automatically isolated upon receipt of a containment isolation signal from Leak Detection and Isolation System (LD&IS).
9.1.4.7 Servicing Aids	A portable, submersible underwater vacuum cleaner to help remove crud or miscellaneous loose matter from the reactor vessel or storage pools. The required pump and filter is also submersible for extended periods. The filter can be changed remotely and disposed of in standard containers after use for offsite burial.
9.2	Auxiliary Systems: Water Systems

PRELIMINARY

Table 12.3-18
Regulatory Guide 4.21 Design Objective and Applicable DCD Subsection Information

Design Objective 4: Reduce the need to decontaminate equipment and structures by decreasing the probability of any release, reducing any amounts released, and decreasing the spread of the contaminant from the source.	
DCD Chapter Section/Subsection	**Description of design feature in DCD to meet design objective**
9.2.2.2 Reactor Component Cooling Water System Description	The RCCWS provides cooling water to nonsafety-related components in the Nuclear Island and provides a barrier against radioactive contamination of the PSWS.
9.2.6.2 Condensate Storage and Transfer System Description	The CS&TS equipment and associated piping are fabricated from stainless steel to prevent contamination of the system water.
9.2.8.1 Turbine Component Cooling Water System Design Bases	The TCCWS utilizes plate and frame type heat exchangers. This design mitigates cross-contamination between TCCWS and the PSWS.
9.3	Auxiliary Systems: Process Auxiliaries
9.3.2.2 System Description	Sampling lines and associated valves and fittings are fabricated from stainless steel.
9.3.2.3 Safety Evaluation	The sampling stations are closed systems and the grab samples taken at the sampling stations have a chemical fume hood to preclude the exposure of operating personnel to contamination hazards. A constant air velocity is maintained through the working face of the hoods to ensure that airborne contamination does not escape to the room under operating conditions.
9.4	Auxiliary Systems: Heating, Ventilation, and Air Conditioning
9.4.1 Control Building HVAC System (CBVS)	The Control Building does not house any portion of the nuclear steam supply process or other equipment that can act as a source of radioactive material; and therefore has no postulated sources of radioactive materials in either particulate or gaseous form. Therefore, the CB exhaust systems require no filtration or adsorption capability.
9.4.1.1 Control Building HVAC System Design Bases	The CBVS: • Reduces the potential spread of airborne contamination by maintaining airflow from areas of lower potential for contamination to areas of greater potential for contamination. The CRHA is maintained at a higher pressure than surrounding areas except during the isolation and smoke exhaust modes. • Detects and limits the introduction of airborne hazardous materials (radioactivity or smoke) into the CRHA

PRELIMINARY

Table 12.3-18
Regulatory Guide 4.21 Design Objective and Applicable DCD Subsection Information

Design Objective 4: Reduce the need to decontaminate equipment and structures by decreasing the probability of any release, reducing any amounts released, and decreasing the spread of the contaminant from the source.	
DCD Chapter Section/Subsection	**Description of design feature in DCD to meet design objective**
9.4.2.1 Fuel Building HVAC System Design Bases	The FBVS: • Maintains a negative pressure in the building to minimize exfiltration of potentially contaminated air.
9.4.3.1 Radwaste Building HVAC System Design Bases	• The RWCRVS maintains the control room areas at a slightly positive pressure (design +31 Pa (+0.125”w.g.)) relative to adjacent areas to minimize infiltration of air. • The RWGAVS maintains the Radwaste Building general area at a slight negative pressure (design -31 Pa (-0.125”w.g.)) relative to adjacent areas and outside atmosphere to prevent the exfiltration of air to adjacent areas. The term “Slightly Negative Pressure” is applied hereafter and represents an allowable pressure range from less than zero to -124 Pa (-0.50”w.g.). Adequate exhaust from the trailer bays is provided to maintain inflow of air from the outside when the truck doors are open. • The RWGAVS is comprised of supply and exhaust subsystems to maintain direction of air flow from personnel occupancy areas towards areas of increasing potential contamination. Exhaust hoods are provided at locations where, under normal operation, contaminants could escape to the surrounding areas. • The RWGAVS provides the capability to exhaust air from the radwaste processing systems. • All exhaust air from the RWGA is discharged to the RWB vent stack. • Redundant components are provided as necessary to increase system reliability, availability and maintainability. • The RWGAVS limits the release of airborne radioactive particulates to the atmosphere by HEPA filtration of the exhaust air from the building prior to discharge to the atmosphere. • The exhaust air is monitored for radiation prior to discharge to atmosphere.

PRELIMINARY

Table 12.3-18
Regulatory Guide 4.21 Design Objective and Applicable DCD Subsection Information

Design Objective 4: Reduce the need to decontaminate equipment and structures by decreasing the probability of any release, reducing any amounts released, and decreasing the spread of the contaminant from the source.	
DCD Chapter Section/Subsection	**Description of design feature in DCD to meet design objective**
9.4.4 Turbine Building HVAC System	The ESBWR: • Meets GDC 60 by suitably controlling the release of gaseous radioactive effluents to the environment. The system directs potentially contaminated building exhaust air to the TBVS system filtration units. Exhaust air from low potential contamination areas is exhausted to the TB vent stack, where it is monitored for radioactive contamination. Exhaust air from high potential contamination areas is filtered using High Efficiency Particulate Air (HEPA) filters before being exhausted to the TB vent stack. The HEPA filters assist in ensuring radioactive material entrained in gaseous effluent will not exceed the limits specified in 10 CFR Part 20, for normal operations and anticipated operational occurrences. TBVS high potential contaminated exhaust subsystems are equipped with HEPA filtration units for localized air cleanup prior to mixing with the main ventilation exhaust (TBE). The local HEPA units are designed, tested and maintained in accordance with Regulatory Guide 1.140. The TBE combined ventilation exhaust is monitored for halogens, particulates and noble gas releases. The TB Compartment area and normal ventilation HVAC PRMS subsystems monitor air for gross radiation levels and alarm functions. The TB is maintained at a slight negative pressure to minimize exfiltration. TB equipment rooms are maintained at a negative pressure to minimize potential airborne radioactivity escaping to adjacent areas or to the outside atmosphere during normal operation by exhausting air through filters from the areas in which a significant potential for contamination exists.
9.4.4.2 Turbine Building HVAC System Description	The air exhausted from the TBDRE, once filtered, passes through the air filtration unit of TBE subsystem and is finally released to the atmosphere through the TB vent stack.

PRELIMINARY

Table 12.3-18
Regulatory Guide 4.21 Design Objective and Applicable DCD Subsection Information

Design Objective 4: Reduce the need to decontaminate equipment and structures by decreasing the probability of any release, reducing any amounts released, and decreasing the spread of the contaminant from the source.	
DCD Chapter Section/Subsection	**Description of design feature in DCD to meet design objective**
9.4.6.1 Reactor Building HVAC System Design Bases	The RBVS: • Maintains potentially contaminated areas at a negative pressure to minimize exfiltration of potentially contaminated air. • Maintains clean areas of the building, except for the battery rooms, at a positive pressure to minimize infiltration of outside air. • Maintains airflow from areas of lower potential for contamination to areas of greater potential for contamination. The pressure in these areas hereafter called "Slightly Negative Pressure" is a range from less than zero to –124 Pa (-0.50"w.g.). • Shuts down during radiological events and isolates the Reactor Building boundary (CONAVS and REPAVS subsystems) to prevent uncontrolled releases to the outside atmosphere. • Provides the ability to draw a negative pressure and exhaust the contaminated ventilation served areas of the reactor building through the Reactor Building HVAC Accident Exhaust Filter Units.

PRELIMINARY

Table 12.3-18
Regulatory Guide 4.21 Design Objective and Applicable DCD Subsection Information

Design Objective 4: Reduce the need to decontaminate equipment and structures by decreasing the probability of any release, reducing any amounts released, and decreasing the spread of the contaminant from the source.	
DCD Chapter Section/Subsection	**Description of design feature in DCD to meet design objective**
9.4.6.2 Reactor Building HVAC System Description	CONAVS: A common supply air duct distributes conditioned air to the potentially contaminated areas of the Reactor Building. Air is exhausted from the potentially contaminated areas of the Reactor Building by the operating exhaust fan and discharged to the RB/FB vent stack. The RB purge exhaust filter units are equipped with pre-filters, HEPA filters, high efficiency filters and carbon filters for mitigating and controlling gaseous effluents from the Reactor Building. REPAVS: During a radiological event, exhaust air from the refueling area may be manually diverted through the Reactor Building HVAC Purge Exhaust Filter Units. The building isolation dampers close and the supply and exhaust fans stop due to high radiation in the exhaust ducts. CLAVS: A mixture of outside and return air is filtered and heated/cooled prior to distribution by the AHU in service. A common supply and return/exhaust air duct system distributes conditioned air to and from the Reactor Building clean areas.
9.4.7.1 Electrical Building HVAC System Design Bases	The TSCVS: • Maintains the TSC at a slightly positive pressure with respect to the adjacent rooms and outside environment to minimize the infiltration of air. The pressure hereafter called "Slightly Positive Pressure" is a range from greater than zero to +124 Pa (+0.50" w.g.). The TSCVS automatically switches to the recirculation mode if smoke is detected in the outside intake air. In this case, there may be no differential pressure between the TSC and the surrounding areas. • Detects and limits the introduction of airborne hazardous materials (radioactivity or smoke) into the TSC.
10.2	Steam and Power Conversion System: Turbine Generator

PRELIMINARY

Table 12.3-18
Regulatory Guide 4.21 Design Objective and Applicable DCD Subsection Information

Design Objective 4: Reduce the need to decontaminate equipment and structures by decreasing the probability of any release, reducing any amounts released, and decreasing the spread of the contaminant from the source.	
DCD Chapter Section/Subsection	**Description of design feature in DCD to meet design objective**
10.2.3.4 Turbine Design	The design of the turbine: • Nuclear Boiler System (NBS) chemistry and thus Turbine Main Steam System (TMSS) chemistry are carefully controlled to minimize the potential effects of pitting and stress corrosion cracking of turbine rotors and blades. Expected ESBWR water quality parameters are provided in Table 5.2-5. The expected reactor water quality exceeds the turbine manufacturer's requirements for steam and condensate purity.
10.3	Steam and Power Conversion System: Turbine Main Steam System
10.3.2.2 Turbine Main Steam System Component Description	The TMSS lines are made of carbon steel and are sized for a normal steady-state velocity.
10.4	Steam and Power Conversion System: Other Features of Steam and Power Conversion System
10.4.1.2.3 Main Condenser System Operation	The condenser and water boxes are welded carbon steel or low alloy-ferrite steel. The tubes are stainless steel or titanium with compatible stainless steel or titanium clad carbon steel tube sheets depending on circulating water chemistry.
10.4.3.3 Turbine Gland Seal System Evaluation	Relief valve(s) on the seal steam header prevent excessive seal steam pressure. The valve(s) discharge to the condenser shell.
10.4.6 Condensate Purification System	The Condensate Purification System (CPS) purifies and treats the condensate as required to maintain reactor feedwater purity. The CPS uses filtration to remove suspended solids, including corrosion products, and ion exchange to remove dissolved solids and other impurities.
10.4.6.1.2 Condensate Purification System Non-Safety Power Generation Design Bases	The CPS removes corrosion products from the condensate and from drains returned to the condenser hotwell, to limit accumulation of corrosion products in the cycle.

PRELIMINARY

Table 12.3-18
Regulatory Guide 4.21 Design Objective and Applicable DCD Subsection Information

Design Objective 4: Reduce the need to decontaminate equipment and structures by decreasing the probability of any release, reducing any amounts released, and decreasing the spread of the contaminant from the source.	
DCD Chapter Section/Subsection	**Description of design feature in DCD to meet design objective**
10.4.6.2.1 Condensate Purification System General Description	The CPS (shown in Figure 10.4-5) consists of high efficiency filters arranged in parallel and operated in conjunction with a normally closed filter bypass. The CPS also includes bead resin ion exchange demineralizer vessels arranged in parallel. The number of filters and demineralizers are indicated in Table 10.4-4. A resin trap is installed downstream of each demineralizer vessel to preclude gross resin leakage into the power cycle in case of vessel resin retention screen failure. The CPS achieves the water quality effluent conditions required for reactor power operation defined in the water quality specification.
10.4.6.3 Condensate Purification System Evaluation	The CPS removes condensate system corrosion products and impurities resulting from condenser tube leakage in addition to some radioactive material, activated corrosion products and fission products that are carried-over from the reactor. The concentration of such radioactive material in the CPS requires shielding (Chapter 12). Wastes from the condensate purification system are collected in controlled areas and sent to the radwaste system for treatment and/or disposal. Chapter 11 describes the activity level and removal of radioactive material from the condensate system. Chemistry threshold limits and administrative actions are established to mitigate chemistry excursions in the condensate system. The COL Applicant will provide threshold values and recommended operator actions for chemistry excursions in the condensate system (COL 10.4-1-A).
10.4.7.2.1 Condensate and Feedwater System General Description	To minimize corrosion product input to the reactor during startup, recirculation lines to the condenser are provided from the high pressure FW heater outlet header. Cleanup is also accomplished by allowing the system to recirculate through the condensate demineralizers for treatment prior to feeding water to the reactor during startup.
11.2	Radioactive Waste Management: Liquid Waste Management System
11.2.1 LWMS Design Bases	• Alternate process subsystem cross-ties and adequate storage volumes are included in the LWMS design to provide for operational and anticipated surge waste volumes. • The LWMS is designed so that no potentially radioactive liquids can be discharged to the environment unless they have first been monitored and diluted, as required. • The LWMS is designed to meet the requirements of General Design Criteria (GDC) 60 (Reference 11.2-4) and RG 1.143 (Reference 11.2-1). Regulatory Guide 1.143 provides radioactive waste management systems; structures and components design guidance; and quality group clarification and quality assurance provisions so that liquid waste as result of natural phenomena hazards and external man-induced hazards can be successfully processed.

PRELIMINARY

Table 12.3-18
Regulatory Guide 4.21 Design Objective and Applicable DCD Subsection Information

Design Objective 4: Reduce the need to decontaminate equipment and structures by decreasing the probability of any release, reducing any amounts released, and decreasing the spread of the contaminant from the source.	
DCD Chapter Section/Subsection	**Description of design feature in DCD to meet design objective**
11.2.2.2.1 Equipment (Low Conductivity) Drain Subsystem	A strainer or filter is provided downstream of the last ion exchanger in series to collect crud and resin fines that may be present.
11.2.2.2.2 Floor (High Conductivity) Drain Subsystem	A strainer or filter is provided downstream of the last ion exchanger in series to collect crud and resin fines that may be present.
11.2.2.3.1 LWMS Pumps	The LWMS process pumps are constructed of materials suitable for their intended service.
11.2.2.3.2 LWMS Tanks	Tanks are sized to accommodate the expected volumes of waste generated in the upstream systems that feed waste into the LWMS for processing. The tanks are constructed of stainless steel to provide a low corrosion rate during normal operation. The tanks are provided with mixing eductors and/or sparger nozzles. The capability exists to sample all LWMS collection and sample tanks. LWMS tanks are vented into the radwaste ventilation system. The LWMS tanks are designed in accordance with the equipment codes listed in Table 11.2-1.
11.2.2.3.4 LWMS Equipment Drain RO and Mixed-Bed Demineralizer Processing Subsystem	The equipment drain processing system utilizes filters for removing suspended solid and radioactive particulate material, and charcoal adsorbtion for organic material removal as necessary. Backwash operation for filtration units is performed when the differential pressure across the filter exceeds a preset limit. Filtration backwash waste is discharged to a low activity phase separator or sent directly to a High Integrity Container (HIC). The Equipment Drain Subsystem consists of a filter for removing large particles, a carbon bed for removing organics, as required, a reverse osmosis membrane for removing submicron particulates, and mixed-bed ion exchangers for polishing dissolved ionic compounds. Exhausted resins from a mixed bed ion exchange unit are sluiced to the low activity spent resin holdup tank when an effluent purity parameter (such as conductivity) exceeds a preset limit or upon high differential pressure across the unit. Fine mesh strainers with backwashing connections are provided in the ion exchange vessel discharge and in the downstream piping to limit resin fines from being carried over to the sampling tanks.
11.2.2.3.5 LWMS Floor Drain RO and Mixed-Bed Demineralizer Processing Subsystem	The Floor Drain Subsystem consists of a filter for removing large particles, a carbon bed for removing organics, as required, a reverse osmosis membrane for removing submicron particulates, and mixed-bed ion exchangers for polishing dissolved ionic compounds.

PRELIMINARY

Table 12.3-18
Regulatory Guide 4.21 Design Objective and Applicable DCD Subsection Information

Design Objective 4: Reduce the need to decontaminate equipment and structures by decreasing the probability of any release, reducing any amounts released, and decreasing the spread of the contaminant from the source.	
DCD Chapter Section/Subsection	**Description of design feature in DCD to meet design objective**
11.3	Radioactive Waste Management: Gaseous Waste Management System
11.3.1 Design Bases	In accordance with IE Bulletin 80-10, May 6, 1980, (Reference 11.3-13), the OGS interconnections between plant systems are designed to minimize the contamination of non-radioactive systems and uncontrolled releases of radioactivity in the environment.
11.3.2.5.7 Offgas System Air Supply	Flow indicators are provided on all air bleed lines to assure that proper air flow is being delivered to the process line or equipment. The air supply is protected from back flow of process gas by two check valves in series in order to comply with Bulletin 80-10, May 6, 1980 (Reference 11.3-13).
11.3.2.6.2 Offgas System Pressure Relief	Radioactive gaseous pressure relief discharge is piped to the main condenser.
11.3.2.6.3 Offgas System Equipment Room Ventilation Control	Differential pressure between general areas and equipment cells is sufficient to maintain a flow of air from clean areas into potentially contaminated areas. In addition, the TBVS is capable of removing sufficient heat from the process piping, equipment, motors, and instrumentation so as to maintain the environmental temperatures as established. All equipment cell and charcoal vault ventilation air is discharged without passing through occupied areas to the TB compartment exhaust system and the turbine building exhaust ventilation stack, where effluent radiation monitoring is performed. Charcoal vault air conditioning and ventilation equipment are accessible for maintenance during plant operation.
11.3.2.6.5 Offgas System Vents and Drains	OGS drains, depending on source, are routed to either the condenser hotwell or to the radwaste system. All piping is provided with high point vents and low point drains to permit system drainage following the hydrostatic test. A water drain is provided on the process lines just upstream of the charcoal tanks. The process lines through the charcoal adsorbers are sloped so that there are no intervening low spots to act as water traps.
11.3.2.6.7 Offgas System Catalytic Recombiners	The inlet piping has sufficient drains and moisture separators to prevent liquid water from entering the recombiner vessel. The condensed water in the condenser is drained to a loop seal that is connected to the main condenser hotwell. Condensed preheater section steam is drained to the above loop seal that is connected to the hotwell. No flow paths above low power operation exist whereby unrecombined offgas can bypass the recombiners.

PRELIMINARY

Table 12.3-18
Regulatory Guide 4.21 Design Objective and Applicable DCD Subsection Information

Design Objective 4: Reduce the need to decontaminate equipment and structures by decreasing the probability of any release, reducing any amounts released, and decreasing the spread of the contaminant from the source.	
DCD Chapter Section/Subsection	**Description of design feature in DCD to meet design objective**
11.3.2.6.8 Offgas System Charcoal	Channeling in the charcoal adsorbers is prevented by supplying an effective flow distributor on the inlet and by a high bed-to-particle diameter ratio.
11.4	Radioactive Waste Management: Solid Waste Management System
11.4.1 SWMS Design Bases	Any resultant gaseous and liquid wastes are routed to other plant sections. Gaseous radionuclides from the SWMS are processed by the monitored radwaste building ventilation system. The monitored ventilation system is described in Subsections 9.4.3 and 12.3.3.2.4. Liquid waste is processed by the monitored LWMS system as described in Section 11.2. Process and effluent radiological monitoring systems are described in Section 11.5. A description of the SWMS design features addressing 10 CFR 20.1406 (Reference 11.4-7) requirements for permanently installed systems is in Subsection 12.3.1.5. The COL Applicant is responsible for including site-specific information describing how the implementation of operating procedures for the SWMS Processing Subsystem will address the requirements of 10 CFR 20.1406 (Reference 11.4-7). Specifically the operational procedures of the SWMS Processing Subsystem should minimize, to the extent practicable, contamination of the facility and the environment, facilitate decommissioning, and minimize the generation of radioactive wastes (COL 11.4-5-A). This information is placed in Subsection 12.3.1.5.
11.4.2.2.1 SWMS Collection Subsystem	Excess water from holdup tanks is pumped to the equipment drain collection tank or floor drain collection tank. During transfer operations of spent bead resins, and sludges, suspended solids are kept suspended by periodic and recirculation flushing to prevent them from agglomerating and possibly clogging lines.
11.4.2.3.2 SWMS Tanks	The SWMS tanks are sized for normal plant waste volumes with sufficient excess capacity to accommodate equipment downtime and expected maximum volumes that may occur. The tanks are constructed of stainless steel to provide a low corrosion rate during normal operation. They are provided with mixing eductors and/or air spargers. The capability exists to sample all SWMS tanks. All SWMS tanks are vented to radwaste ventilation. The SWMS tanks are designed in accordance with ASME BPVC, Div. 1 or Div. 2, American Petroleum Institute (API) 620, API 650, or AWWA D-100.

PRELIMINARY

Table 12.3-18
Regulatory Guide 4.21 Design Objective and Applicable DCD Subsection Information

Design Objective 4: Reduce the need to decontaminate equipment and structures by decreasing the probability of any release, reducing any amounts released, and decreasing the spread of the contaminant from the source.	
DCD Chapter Section/Subsection	**Description of design feature in DCD to meet design objective**
11.4.2.3.3 SWMS Piping	Piping used for hydraulic transport of slurries such as ion exchange resins, filter backwash (sludge), and waste tank sludge are specifically designed to assure trouble-free operation. Pipe flow velocities are sufficient to maintain a flow regime appropriate to the slurry being transported (ion exchange resins, filter backwash, RO concentrate, or tank sludge). An adequate water/solids ratio is maintained throughout the transfer. Slurry piping is provided with manual and automatic flushing with a sufficient water volume to flush the pipe clean after each use. Piping codes are in accordance with RG 1.143 for Solid Waste Management Systems. Additionally, piping shielding design features are provided in accordance with RG 8.8, Position 2.
11.5	Radioactive Waste Management: Process Radiation Monitoring System
11.5.3.2.5 Liquid Radwaste Discharge	During the discharge, the liquid is extracted from the liquid radwaste discharge process pipe, passed through a liquid sample panel that contains a detection assembly for radiation monitoring, and returned to the process pipe. The sample panel chamber can be drained and flushed to allow assessment of background buildup.
11.5.3.2.7 Radwaste Building Ventilation Exhaust	A sample, continuously extracted, passes through the panel and returns to the exhaust. The subsystem has provisions for purging the sample panel with room air to check detector response to the background radiation level reading.
11.5.3.2.13.1 RB/FB Stack	A sample, continuously extracted from the stack, passes through the panel and returns to the stack exhaust.
11.5.3.2.13.2 TB Stack	A sample, continuously extracted from the stack, passes through the panel and returns to the stack exhaust.
11.5.3.2.13.3 RW Stack	A sample, continuously extracted from the stack, passes through the panel and returns to the stack exhaust.

PRELIMINARY

Table 12.3-18
Regulatory Guide 4.21 Design Objective and Applicable DCD Subsection Information

Design Objective 4: Reduce the need to decontaminate equipment and structures by decreasing the probability of any release, reducing any amounts released, and decreasing the spread of the contaminant from the source.	
DCD Chapter Section/Subsection	**Description of design feature in DCD to meet design objective**
11.5.6.4 IE Bulletin 80-10 Evaluation	The Process Radiation Monitoring System comprises subsystems that monitor liquid and gaseous effluents that utilize components designed and installed in various ways. A majority of these subsystems are constructed in a way that it is not possible for them to become contaminated due to leakage, spills, errors in valve lineup or other operating conditions as a result of interfacing with radioactive systems. These types of Radiation Monitoring Subsystems are typically purely electrical in nature and do not physically interconnect with the radioactive systems that they are monitoring. In addition, these PRM Subsystems do not interconnect with other non-radioactive systems, thereby eliminating the potential for transfer of radioactive material from a radioactive system to a non-radioactive system.
11.5.6.5 Implementation of 10 CFR 20.1406	The PRM Subsystem designs, and procedures used for operation, minimization of facility and environmental contamination, facilitate decommissioning, and minimization of radioactive waste generation, in accordance with 10 CFR 20.1406 includes: • Minimizing contamination by: – Locating radiation detectors outside the process that they monitor, whenever feasible, to avoid the potential of coming in contact with a radioactive process; – Providing atmospheric purging of the internal portion of air sampling skids as necessary; – Providing the ability for liquid flushing of the internal portions of liquid sampling skids as necessary; – Designing the interior portions of liquid and gaseous sampling chambers to minimize the plateout of radioactive material; and – Designing sample extraction points such that they minimize the potential for spillage and contamination of adjacent areas.
12.3.1	Radiation Protection: Facility Design Features

PRELIMINARY

Table 12.3-18
Regulatory Guide 4.21 Design Objective and Applicable DCD Subsection Information

Design Objective 4: Reduce the need to decontaminate equipment and structures by decreasing the probability of any release, reducing any amounts released, and decreasing the spread of the contaminant from the source.	
DCD Chapter Section/Subsection	**Description of design feature in DCD to meet design objective**
12.3.1 Facility Design Features	Carbon steel is used in a large portion of the system piping and equipment outside of the nuclear steam supply system. Carbon steel is typically low in nickel content and contains a very small amount of cobalt impurity. Stainless steel is used in portions of the system, such as the reactor internal components and heat exchanger tubes, where high corrosion resistance is required. The nickel content of the stainless steels is in the 9 to 10.5% range and is controlled in accordance with applicable ASME material specifications. Cobalt content is controlled to less than 0.05% in the XM-19 alloy used in the control rod drives. A previous review of materials certifications indicated average cobalt content of only 0.15% in austenitic stainless steels. Ni-Cr-Fe alloys such as Inconel 600 and Inconel X750, which have high nickel content, are used in some reactor vessel internal components. These materials are used in applications where special requirements (possessing specific thermal expansion characteristics along with adequate corrosion resistance) are necessary, and where no suitable alternative low-nickel material is available. Cobalt content in the Inconel X750 used in the fuel assemblies is limited to 0.05%. Stellite is used for hard facing of components that must be extremely wear resistant. Use of high cobalt alloys such as Stellite is restricted to those applications where no satisfactory alternative material is available. An alternative material (Colmonoy) has been used for some hard facings in the core area. Main condenser tubes and tube sheets are made of stainless steel or titanium alloys to minimize the introduction of foreign material into the reactor system as a result of condenser tube leakage.
12.3.1.1.1 Pumps	Provisions are made for flushing and in certain cases chemically cleaning pumps prior to maintenance. Pump casing drains provide a means for draining pumps to the sumps prior to disassembly, thus reducing the exposure of personnel and decreasing the potential for contamination.
12.3.1.1.2 Instrumentation	Liquid service equipment for systems containing radioactive fluids is provided with vent and backflush provisions. Instrument lines, except those for the reactor vessel, are designed with provisions for backflushing and maintaining a clean fill in the sensing lines. The reactor vessel sensing lines may be flushed with condensate following reactor blowdown.

PRELIMINARY

Table 12.3-18
Regulatory Guide 4.21 Design Objective and Applicable DCD Subsection Information

Design Objective 4: Reduce the need to decontaminate equipment and structures by decreasing the probability of any release, reducing any amounts released, and decreasing the spread of the contaminant from the source.	
DCD Chapter Section/Subsection	**Description of design feature in DCD to meet design objective**
12.3.1.1.3 Heat Exchangers	Heat exchangers are constructed of stainless steel or Cu/Ni tubes to minimize the possibility of failure and reduce maintenance requirements. The heat exchanger design allows for the complete drainage of fluids from the exchanger, avoiding pooling effects that could lead to radioactive crud deposition. Connections are available for condensate or demineralized water flushing of the heat exchangers. For the RWCU/SDC, separate connections are also provided for introducing chemical cleaning solutions for decontaminating the heat exchangers. The fuel pool heat exchanger is downstream of the filter/demineralizer and is not subjected to flows containing significant amounts of fission or activation products.
12.3.1.1.4 Valves	Wherever possible, valves in systems containing radioactive fluids are separated from those for "clean" services to reduce the radiation exposure from adjacent valves and piping during maintenance. Flushing and drain provisions are employed in radioactive systems to reduce exposure to personnel during maintenance.
12.3.1.1.5 Piping	Piping was selected to provide a service life equivalent to the design life of the plant, with consideration given to corrosion allowances and environmental conditions. Piping in radioactive systems such as the RWCU/SDC has butt-welded connections, rather than socket welds, to reduce crud traps. Distinction is made between piping conveying radioactive and non radioactive fluids, and separate routing through shielded pipe chases is provided whenever possible.
12.3.1.1.7 Floor Drains	Floor drains with appropriately sloped floors are provided in shielded cubicles where the potential for spills exist. Those drain lines having a potential for containing highly radioactive fluids are routed through pipe chases, shielded cubicles, or are embedded in concrete walls and floors. Smooth epoxy-type coatings are employed to facilitate decontamination when a spill does occur.
12.3.1.2.2 Sample Stations	Sample stations in the plant provide for the routine surveillance of reactor water quality. These sample stations are located in low radiation areas to reduce the exposure to operating personnel. Flushing provisions are included using demineralized water, and pipe drains to plant sumps are provided to minimize the possibility of spills. Fume hoods are employed for airborne contamination control. Both working areas and fume hoods are constructed of polished stainless steel to ease decontamination if a spill does occur. Grab spouts are located above the sink to reduce the possibility of contaminating surrounding areas during the sampling process.

PRELIMINARY

Table 12.3-18
Regulatory Guide 4.21 Design Objective and Applicable DCD Subsection Information

Design Objective 4: Reduce the need to decontaminate equipment and structures by decreasing the probability of any release, reducing any amounts released, and decreasing the spread of the contaminant from the source.	
DCD Chapter Section/Subsection	**Description of design feature in DCD to meet design objective**
12.3.1.2.4 Piping	"Clean" services and radioactive piping are required at times to be routed together in shielded cubicles. In such situations, provisions are made for the valves required for process operations to be controlled remotely, without need for entering the cubicle. Piping configurations are designed to minimize the number of "dead legs" and low points in piping runs to avoid accumulation of radioactive crud and fluids in the line. Drains and flushing provisions are employed whenever feasible to reduce the effect of required "dead legs" and low points. Systems containing radioactive fluids are welded to the most practical extent to reduce leakage through flanged or screwed connections. For highly radioactive systems, butt welds are employed to minimize crud traps. Provisions are also made in radioactive systems for flushing with condensate or chemically cleaning the piping to reduce crud buildup.
12.3.1.2.6 Contamination Control	The HVAC System is designed to limit the extent of airborne contamination by providing airflow patterns from areas of low contamination to more contaminated areas. This, in general, is accomplished by creating negative pressure areas in contaminated cubicles, thus keeping air flow into each cubicle from the corridor area. From these exhaust trunks the exhaust flow is discharged to the RB/FB stack. Penetrations through outer walls of the building containing radiation sources are sealed to prevent miscellaneous leaks into the environment. The equipment drain sump vents that contain airborne contaminants from discharges to the sump are piped directly to their respective building HVAC System. Wet transfer of both the steam dryer and separator also reduces the likelihood of contaminants on this equipment being released into the plant atmosphere. In areas where the reduction of airborne contaminants cannot be eliminated efficiently by HVAC Systems, breathing air provisions are provided, for example, for CRD removal under the reactor pressure vessel and in the CRD maintenance room.
12.3.1.4.2 Fuel and Auxiliary Pools Cooling System	Piping potentially containing resin is continuously sloped downward to the backwash tank.

PRELIMINARY

Table 12.3-18
Regulatory Guide 4.21 Design Objective and Applicable DCD Subsection Information

Design Objective 4: Reduce the need to decontaminate equipment and structures by decreasing the probability of any release, reducing any amounts released, and decreasing the spread of the contaminant from the source.	
DCD Chapter Section/Subsection	**Description of design feature in DCD to meet design objective**
12.3.1.4.5 Radwaste Building Structure	Design features to minimize occupational exposure include: • Design of equipment with adequate finish or linings to prevent formation and adherence of corrosion products to facilitate decontamination; • Piping design to minimize crud traps and plateout (there are no socket welds in contaminated piping systems); • Provision for remote pipe and equipment flushing; • LWMS and SWMS tanks vent to radwaste building ventilation. The radwaste building process systems area is designed to accommodate modular shield walls to further limit access and reduce radiation levels from waste processing equipment.
12.3.3	Radiation Protection: Ventilation
12.3.3.2 Design Description	In the following subsections, the design features of the various ventilation systems that achieve the radiation control design objectives are discussed. For all areas potentially having airborne radioactivity, the ventilation systems are designed such that during normal and maintenance operations, airflow between areas is always from an area of low potential contamination to an area of higher potential contamination.
12.3.3.2.1 Control Room Ventilation	The EFUs are located in closed rooms that help prevent the spread of any radioactive contamination during maintenance.

PRELIMINARY

Table 12.3-18
Regulatory Guide 4.21 Design Objective and Applicable DCD Subsection Information

Design Objective 5: Facilitate the decommissioning by (1) minimizing embedded and buried piping, and (2) designing the facility to facilitate the removal of any equipment and/or components that may require removal and/or replacement during facility operation or decommissioning.	
DCD Chapter Section/Subsection	**Description of design feature in DCD to meet design objective**
3.8	Design of Structures, Components, Equipment, and Systems: Seismic Category I Structures
3.8.1.1.1 Concrete Containment	The containment is a low-leakage reinforced concrete structure with an internal steel liner in the drywell and wetwell to serve as a leaktight membrane. The containment and the structures integrated with the containment are constructed of cast-in-place, reinforced concrete.
3.8.4 Other Seismic Category I	The ESBWR Standard Plant does not contain underground Seismic Category I pipelines or masonry wall construction. Removable shield blocks consisting of metallic forms filled with grout or concrete designed to Seismic Category II requirements are used. The shield blocks are provided with removable structural steel frame also designed to Seismic Category II requirements to prevent the shielding blocks from sliding or tipping under seismic events
3.8.4.1.1 Reactor Building Structure	These structures are tied together by a system of internal concrete bearing walls and concrete floor slabs. Floor slabs are designed, in general, as composite structures supported by embedded beams during construction
3.8.4.6.5 Special Construction Techniques	Composite construction is used in other Seismic Category I structures.
4.2	Reactor: Fuel System Design
4.2.4.8 Materials	Materials selected for use in the Marathon control rod components are chosen to minimize the component end-of-life radioactivity in order to reduce personnel exposure during handling on-site, and for final offsite shipping and burial. All Marathon control rod materials are less than 0.03 weight percent cobalt. The average niobium content for the handle and absorber section, less boron carbide and hafnium, is less than 0.1 weight percent.
4.6	Reactor: Functional Design of Reactivity Control System

PRELIMINARY

Table 12.3-18
Regulatory Guide 4.21 Design Objective and Applicable DCD Subsection Information

Design Objective 5: Facilitate the decommissioning by (1) minimizing embedded and buried piping, and (2) designing the facility to facilitate the removal of any equipment and/or components that may require removal and/or replacement during facility operation or decommissioning.	
DCD Chapter Section/Subsection	**Description of design feature in DCD to meet design objective**
4.6.2.1.4 CRD Maintenance	The FMCRD design also allows for separate removal of the motor unit, position indicator probe (PIP), separation indicator probe (SIP) and spool piece for maintenance during plant outages without disturbing the upper assembly of the drive. While these FMCRD components are removed for servicing, the associated control rod is maintained in the fully inserted position by one of two mechanical locking devices that prevent rotation of the ball screw and drive shaft.
5.4	Reactor Coolant System and Connected Systems: Component and Subsystem Design
5.4.13.2 Safety and Relief Valves and Depressurization Valves Description	DPVs are designed with flange connections to allow whole valve removal or reinstallation.
6.1	Engineered Safety Features: Design Basis Accident Engineered Safety Feature Materials
6.1	Only metallic insulation is used inside the containment
6.1.2.1 Protective Coatings	Consistent with the rationale of RG 1.54, the WW and attendant vertical vents are designated as a Service Level I area. All surfaces and equipment in this area are either uncoated, corrosion resistant stainless steel, or coated in accordance with RG 1.54 and referenced ASTM standards, as applicable. Regardless of service level designation, all field applied epoxy coatings inside containment meet the requirements of RG 1.54 and are qualified using the standard ASTM tests, as applicable to procurement, installation, and maintenance.
9.1	Auxiliary Systems: Fuel Storage and Handling
9.1.4.7 Servicing Aids	A portable, submersible underwater vacuum cleaner to help remove crud or miscellaneous loose matter from the reactor vessel or storage pools. The required pump and filter is also submersible for extended periods. The filter can be changed remotely and disposed of in standard containers after use for offsite burial.
9.3	Auxiliary Systems: Process Auxiliaries

PRELIMINARY

Table 12.3-18
Regulatory Guide 4.21 Design Objective and Applicable DCD Subsection Information

Design Objective 5: Facilitate the decommissioning by (1) minimizing embedded and buried piping, and (2) designing the facility to facilitate the removal of any equipment and/or components that may require removal and/or replacement during facility operation or decommissioning.	
DCD Chapter Section/Subsection	**Description of design feature in DCD to meet design objective**
9.3.3.4 Equipment and Floor Drain System Testing and Inspection Requirements	The EFDS is designed to permit periodic inspection and testing of important components, such as valves, motor operators, and piping, to verify their integrity and capability. Equipment layout provides easy access for inspection and maintenance. Drainage piping is hydrostatically tested prior to embedment in concrete. Potentially radioactive drainage piping is pressure tested in accordance with ASME B31.1. The EFDS functionality is demonstrated by continuous use during normal plant operation.
9.4	Auxiliary Systems: Heating, Ventilation, and Air Conditioning
9.4.1 Control Building HVAC System	The Control Building does not house any portion of the nuclear steam supply process or other equipment that can act as a source of radioactive material; and therefore has no postulated sources of radioactive materials in either particulate or gaseous form. Therefore, the CB exhaust systems require no filtration or adsorption capability.
9.4.2.1 Fuel Building HVAC System Design Bases	The Fuel Building HVAC System • Is provided with access doors for AHUs, fans, filter sections, and duct-mounted dampers to allow for maintenance as applicable.
11.2	Radioactive Waste Management: Liquid Waste Management System
11.2.2.3.3 Processing Systems	Modular shield walls are provided in the RW to allow shield walls to be constructed to minimize exposure to personnel during operation and routine maintenance.
11.2.2.3.4 Equipment Drain RO and Mixed-Bed Demineralizer Processing Subsystem	The processing system is designed and configured for installation ease and process reconfiguration. In-plant supply and return connections from permanently installed equipment to the processing system are provided for operational flexibility
11.2.2.3.5 Floor Drain RO and Mixed-Bed Demineralizer Processing Subsystem	The processing system is configured for installation ease and process reconfiguration. In-plant supply and return connections from other radwaste equipment to the processing system are provided to ensure operational flexibility.

PRELIMINARY

Table 12.3-18
Regulatory Guide 4.21 Design Objective and Applicable DCD Subsection Information

Design Objective 5: Facilitate the decommissioning by (1) minimizing embedded and buried piping, and (2) designing the facility to facilitate the removal of any equipment and/or components that may require removal and/or replacement during facility operation or decommissioning.	
DCD Chapter Section/Subsection	**Description of design feature in DCD to meet design objective**
11.4	Radioactive Waste Management: Solid Waste Management System
11.4.2.3.5 SWMS Processing Subsystem	The SWMS Processing Subsystem is designed to be readily replaced. This section includes requirements to be included in the replacement of the process systems throughout the life of the ESBWR.
11.5	Radioactive Waste Management: Process Radiation Monitoring System
11.5.6.5 Implementation of 10 CFR 20.1406	• Facilitating decommissioning by: – Providing equipment, where feasible, that reduces the need for decontamination during the removal and disposal of the equipment.
12.3.1	Radiation Protection: Facility Design Features
12.3.1.1.1 Pumps	Quick-change cartridge-type seals on pumps, and pumps with back pullout features that permit removal of the pump impeller or mechanical seals without disassembly of attached piping are employed to minimize exposure time during pump maintenance.
12.3.1.1.5 Piping	Distinction is made between piping conveying radioactive and non radioactive fluids, and separate routing through shielded pipe chases is provided whenever possible. Piping conveying highly contaminated fluids is usually routed through shielded pipe chases and shielded cubicles. However, when these options are not feasible, the radioactive piping is embedded in concrete walls and floors.

PRELIMINARY

Table 12.3-18
Regulatory Guide 4.21 Design Objective and Applicable DCD Subsection Information

Design Objective 5: Facilitate the decommissioning by (1) minimizing embedded and buried piping, and (2) designing the facility to facilitate the removal of any equipment and/or components that may require removal and/or replacement during facility operation or decommissioning.	
DCD Chapter Section/Subsection	**Description of design feature in DCD to meet design objective**
12.3.1.2.4 Piping	Piping containing radioactive fluids is routed through shielded pipe chases, shielded equipment cubicles, or embedded in concrete walls and floors, whenever possible. "Clean" services, such as compressed air and demineralized water, are not routed through shielded pipe chases, where possible. For situations in which radioactive piping must be routed through corridors or other low radiation areas, an analysis is conducted to ensure this routing does not compromise the existing radiation zoning. Some piping may be embedded in concrete (e.g., feed-throughs with short sections). Optimization by short sections with embedded piping to the extent practicable facilitates the dismantlement of the systems and the decommissioning of the facility, as required by 10 CFR 20.1406. The radwaste piping gallery between the Turbine Building and the Radwaste Building contains only nonsafety-related electrical cables that are separated from the radwaste piping by a 20 cm shield wall. Cable replacement, though infrequent, is to be performed during shutdown or when no waste transfer operations are occurring in accordance with plant maintenance and radiation protection program procedures that take into account ALARA. During normal operation, the 20 cm concrete shielding minimizes the potential dose to electrical equipment during waste transfer operations.
12.3.1.5.1 Design Considerations	Examples of ESBWR design features that minimize contamination and facilitate decommissioning include the following: • To facilitate decommissioning, the Reactor, Fuel, Turbine, and Radwaste Buildings are designed for large equipment removal, consisting of entry doors from the outside and numerous equipment hatches within the buildings; • To facilitate decommissioning and ease of access, the radwaste process systems are skidmounted and located in the radwaste building to allow truck access, and system skid loading and unloading; • For some piping, feed-throughs with short sections, the piping may be embedded in concrete as discussed in subsection 12.3.1.2.4. Minimization of short sections with embedded piping to the extent practicable facilitates the dismantlement of the systems and the decommissioning;

PRELIMINARY

Table 12.3-18
Regulatory Guide 4.21 Design Objective and Applicable DCD Subsection Information

Design Objective 6: Minimize the generation and volume of radioactive waste during both operation and during decommissioning (by minimizing the volume of components and structures that become contaminated during plant operation).	
DCD Chapter Section/Subsection	**Description of design feature in DCD to meet design objective**
3.1	Design of Structures, Components, Equipment, and Systems: Conformance With NRC General Design Criteria
3.1.6.1 Criterion 60 — Control of Releases of Radioactive Materials to the Environment	The ESBWR is designed so that releases of radioactive materials, in their gaseous, liquid, and solid form are minimized. Gaseous releases come primarily from the turbine condenser offgas and the ventilation systems. Noble gas and iodine activity that enters the turbine offgas system is held by ambient charcoal beds. Ventilation releases are through multiple plant stacks. The TB, RB/FB and RW stacks and the major streams feeding the plant stacks are monitored by the process radiation monitoring system so that action may be taken to avoid releases in excess of regulatory limits. The radwaste systems process liquid and solid wastes. Processes are provided to treat and package solid wastes, as required by applicable state and federal regulations. In addition, the ESBWR liquid radwaste system can be operated in a mode where non-detergent and nonchemical waste streams are treated to allow maximum recycle to the condensate storage tank. This mode of operation would minimize releases of radioactivity via the liquid or discharge pathway, but would increase solid waste generated. The radwaste system has significant hold-up capacity, both in waste collection tanks and in sample tanks containing processed water. This hold-up or surge capacity provides the plant operator flexibility in operations when deciding when and how to release effluents to the environment.
4.2	Reactor: Fuel System Design
4.2.4.8 Materials	Materials selected for use in the Marathon control rod components are chosen to minimize the component end-of-life radioactivity in order to reduce personnel exposure during handling on-site, and for final offsite shipping and burial. All Marathon control rod materials are less than 0.03 weight percent cobalt. The average niobium content for the handle and absorber section, less boron carbide and hafnium, is less than 0.1 weight percent.
4.6	Reactor: Functional Design of Reactivity Control System

PRELIMINARY

Table 12.3-18
Regulatory Guide 4.21 Design Objective and Applicable DCD Subsection Information

Design Objective 6: Minimize the generation and volume of radioactive waste during both operation and during decommissioning (by minimizing the volume of components and structures that become contaminated during plant operation).	
DCD Chapter Section/Subsection	**Description of design feature in DCD to meet design objective**
4.6.2.1.4 CRD Maintenance	The FMCRD design also allows for separate removal of the motor unit, position indicator probe (PIP), separation indicator probe (SIP) and spool piece for maintenance during plant outages without disturbing the upper assembly of the drive. While these FMCRD components are removed for servicing, the associated control rod is maintained in the fully inserted position by one of two mechanical locking devices that prevent rotation of the ball screw and drive shaft.
6.1	Engineered Safety Features: Design Basis Accident Engineered Safety Feature Materials
6.1	Only metallic insulation is used inside the containment
6.1.2.1 Protective Coatings	Consistent with the rationale of RG 1.54, the WW and attendant vertical vents are designated as a Service Level I area. All surfaces and equipment in this area are either uncoated, corrosion resistant stainless steel, or coated in accordance with RG 1.54 and referenced ASTM standards, as applicable. Regardless of service level designation, all field applied epoxy coatings inside containment meet the requirements of RG 1.54 and are qualified using the standard ASTM tests, as applicable to procurement, installation, and maintenance.
9.1	Auxiliary Systems: Fuel Storage and Handling
9.1.4.7 Servicing Aids	A portable, submersible underwater vacuum cleaner to help remove crud or miscellaneous loose matter from the reactor vessel or storage pools. The required pump and filter is also submersible for extended periods. The filter can be changed remotely and disposed of in standard containers after use for offsite burial.
9.2	Auxiliary Systems: Water Systems
9.2.6.2 Condensate Storage and Transfer System Description	The CS&TS equipment and associated piping are fabricated from stainless steel to prevent contamination of the system water.
9.3	Auxiliary Systems: Process Auxiliaries

PRELIMINARY

Table 12.3-18
Regulatory Guide 4.21 Design Objective and Applicable DCD Subsection Information

Design Objective 6: Minimize the generation and volume of radioactive waste during both operation and during decommissioning (by minimizing the volume of components and structures that become contaminated during plant operation).	
DCD Chapter Section/Subsection	**Description of design feature in DCD to meet design objective**
9.3.3.1 Equipment and Floor Drain System Design Bases	The EFDS meets requirements of GDC 60 by providing a design to avoid the transfer of contaminated fluids to a non-contaminated drainage system for disposal. To preclude inadvertent transfer of radioactive liquids to non-radioactive systems, the radioactively contaminated or potentially contaminated liquids are collected by completely separate systems (e.g. no cross connections) from those that collect non-radioactive liquids. Redundant sump pumps are included to increase the reliability, availability, and maintainability of the EFDS.

PRELIMINARY

Table 12.3-18
Regulatory Guide 4.21 Design Objective and Applicable DCD Subsection Information

Design Objective 6: Minimize the generation and volume of radioactive waste during both operation and during decommissioning (by minimizing the volume of components and structures that become contaminated during plant operation).	
DCD Chapter Section/Subsection	**Description of design feature in DCD to meet design objective**
9.3.3.2 Equipment and Floor Drain System Description	The Clean Drain Subsystem collects and transfers liquid wastes by gravity from the clean nonradioactive equipment and floor drains to sumps and pumps these wastes to an appropriate disposal system. The LCW Drain Subsystem collects liquid wastes from equipment drains in potentially contaminated systems. These liquids gravity drain to sumps located in the drywell and other areas. The drywell LCW drain, which is monitored for activity, is pumped to the LCW collection tank. The drywell LCW sump pump discharge line is provided with redundant containment isolation valves. The liquid wastes collected in the LCW sumps are also pumped to the LCW collection tank. The HCW Drain Subsystem collects liquid wastes from floor drains in potentially contaminated areas. These liquids gravity drain to sumps located in the drywell and other areas. The drywell HCW drain, which is monitored for activity, is pumped to the HCW collection tank. The drywell HCW sump pump discharge line is provided with redundant containment isolation valves. Liquids collected in the HCW sumps are also pumped to the HCW collection tank. The Detergent Drain Subsystem collects potentially contaminated wastes from the personnel decontamination stations, laundry, and shower facility drains and transfers them to the detergent drain collection tank. The Chemical Waste Drain Subsystem collects liquid wastes containing potentially contaminated chemicals and corrosive substances from washdown areas, laboratory drains, hot maintenance shop, and other miscellaneous sources in the plant. These liquid wastes are transferred to the chemical drain collection tank. Dedicated sumps in the EFDS collect vent and drain water from the closed loop RCCWS and direct the water to the Reactor Building Cooling Water Drain Subsystem. The size of this subsystem accommodates the draining of the largest isolable cooling water pipe segment in the Reactor Building. The sump contents are evaluated for radioactivity and water quality. If the cooling water is radioactively contaminated, it is directed to the LWMS, where it can be processed. If not, the cooling water may be recycled through a line tied back to the cooling water system. Safety divisions are provided with a separate drain line connecting to the main drainage piping and leading to an appropriate sump in both the Reactor Building and Control Building. Each drain line is provided with a normally closed manual valve, closed to prevent flooding of multiple safety divisions due to backflow. Watertight walls, floors, and doors on safety-related compartments also prevent flooding of multiple safety-related compartments. The collected liquids are discharged to the clean waste system or the Liquid Waste Management System, as appropriate.

PRELIMINARY

Table 12.3-18
Regulatory Guide 4.21 Design Objective and Applicable DCD Subsection Information

Design Objective 6: Minimize the generation and volume of radioactive waste during both operation and during decommissioning (by minimizing the volume of components and structures that become contaminated during plant operation).	
DCD Chapter Section/Subsection	**Description of design feature in DCD to meet design objective**
9.4	Auxiliary Systems: Heating, Ventilation, and Air Conditioning
9.4.7 Electrical Building HVAC System	• Meets GDC 60 because the EER, TSC and Diesel Building HVAC Systems have no source of radioactive materials in either particulate or gaseous form. The exhaust systems have no provision for filtration or adsorption because these areas are clean.
11.2	Radioactive Waste Management: Liquid Waste Management System
11.2.2.1 Summary Description	The LWMS is divided into several subsystems, so that the liquid wastes from various sources can be segregated and processed separately, based on the most economical and efficient process for each specific type of impurity and chemical content. Cross-connections between subsystems provide additional flexibility in processing the wastes by alternate methods and provide redundancy if one subsystem is inoperative.
11.2.3.2 Radioactive Releases	During liquid processing by the LWMS, radioactive contaminants are removed and the bulk of the liquid is purified and either returned to the condensate storage tank or discharged to the environment. The radioactivity removed from the liquid waste is concentrated on filter media, RO membrane, ion exchange resins, and concentrated waste.
11.3	Radioactive Waste Management: Gaseous Waste Management System
11.3.2.3 Offgas System Process Facility	The OGS process equipment is housed in a reinforced-concrete structure adjacent to the Main Turbine Condenser in the Turbine Building to minimize piping.
11.4	Radioactive Waste Management: Solid Waste Management System
11.4.2.3.5 SWMS Processing Subsystem	The Processing Subsystem is anticipated to be modernized as more effective technologies are discovered and proven throughout the life of plant operation.
11.5	Radioactive Waste Management: Process Radiation Monitoring System

PRELIMINARY

Table 12.3-18
Regulatory Guide 4.21 Design Objective and Applicable DCD Subsection Information

Design Objective 6: Minimize the generation and volume of radioactive waste during both operation and during decommissioning (by minimizing the volume of components and structures that become contaminated during plant operation).	
DCD Chapter Section/Subsection	**Description of design feature in DCD to meet design objective**
11.5.6.5 Implementation of 10 CFR 20.1406	• Minimizing the generation of radioactive waste by: – Directing continuous samples from radioactive processes back to the sampled process; – Utilizing electronic bug sources, where compatible with the subsystem design, in order to minimize the use of radioactive sources; and – Minimizing the amount of a sample that needs to be extracted, consistent with laboratory and sensitivity requirements.
12.3.1	Radiation Protection: Facility Design Features
12.3.1.2.4 Piping	Piping configurations are designed to minimize the number of "dead legs" and low points in piping runs to avoid accumulation of radioactive crud and fluids in the line. Drains and flushing provisions are employed whenever feasible to reduce the effect of required "dead legs" and low points. Systems containing radioactive fluids are welded to the most practical extent to reduce leakage through flanged or screwed connections. For highly radioactive systems, butt welds are employed to minimize crud traps. Provisions are also made in radioactive systems for flushing with condensate or chemically cleaning the piping to reduce crud buildup.

PRELIMINARY

Table 12.3-18
Regulatory Guide 4.21 Design Objective and Applicable DCD Subsection Information

Design Objective 6: Minimize the generation and volume of radioactive waste during both operation and during decommissioning (by minimizing the volume of components and structures that become contaminated during plant operation).	
DCD Chapter Section/Subsection	**Description of design feature in DCD to meet design objective**
12.3.1.5.1 Design Considerations	Examples of ESBWR design features that minimize the generation of radioactive waste include the following: • The Liquid Waste Management System (LWMS) is divided into several subsystems, so that the liquid wastes from various sources can be segregated and processed separately, based on the most efficient process for each specific type of impurity and chemical content. This segregation allows for efficient processing and minimization of overall liquid waste. • During liquid processing by the LWMS, radioactive contaminants are removed and the bulk of the liquid is purified and either returned to the condensate storage tank or discharged to the environment, minimizing overall liquid waste. The radioactivity removed from the liquid waste is concentrated in filter media ion exchange resins and concentrated waste. The filter sludge, ion exchange resins and concentrated waste are sent to the Solid Waste Management System (SWMS) for further processing. • The SWMS is designed to segregate and package the wet and dry types of radioactive solid waste for off-site shipment and burial. This segregation allows for efficient processing and minimization of overall solid waste. • For management of gaseous radioactive waste, the Offgas System (OGS) minimizes and controls the release of radioactive material into the atmosphere by delaying release of the offgas process stream initially containing radioactive isotopes of krypton, xenon, iodine, nitrogen, and oxygen. Examples of ESBWR design features that minimize the generation of radioactive waste during decommissioning operations include the following: • Reduction of cobalt content in structural and bearing materials; • Minimization of crud buildup in drains by use of stainless steel linings, improving drainage, and facilitating flushing; and • Easing surface decontamination by providing epoxy-type wall and floor coverings.

PRELIMINARY

Figure 12.3-1. Nuclear Island Radiation Zones for Full Power and Shutdown Operation - Elevation -11500 mm

PRELIMINARY

Figure 12.3-2. Nuclear Island Radiation Zones for Full Power and Shutdown Operation - Elevation -6400 mm

PRELIMINARY

Figure 12.3-3. Nuclear Island Radiation Zones for Full Power and Shutdown Operation - Elevation -1000 mm

PRELIMINARY

Figure 12.3-4. Nuclear Island Radiation Zones for Full Power and Shutdown Operation – Elevation 4650 mm

PRELIMINARY

Figure 12.3-5. Nuclear Island Radiation Zones for Full Power and Shutdown Operation - Elevation 9060 mm

PRELIMINARY

Figure 12.3-6. Nuclear Island Radiation Zones for Full Power and Shutdown Operation - Elevation 13570 mm

PRELIMINARY

Figure 12.3-7. Nuclear Island Radiation Zones for Full Power and Shutdown Operation - Elevation 17500 mm

PRELIMINARY

Figure 12.3-8. Nuclear Island Radiation Zones for Full Power and Shutdown Operation - Elevation 27000 mm

PRELIMINARY

Figure 12.3-9. Nuclear Island Radiation Zones for Full Power and Shutdown Operation - Elevation 34000 mm

PRELIMINARY

Figure 12.3-10. Nuclear Island Radiation Zones for Full Power and Shutdown Operation Section A-A

PRELIMINARY

Figure 12.3-11. Nuclear Island Radiation Zones for Full Power and Shutdown Operation Section B-B

PRELIMINARY

Figure 12.3-12. Turbine Building Radiation Zones - Elevation -1400 mm

PRELIMINARY

Figure 12.3-13. Turbine Building Radiation Zones - Elevation 4650 mm

PRELIMINARY

Figure 12.3-14. Turbine Building Radiation Zones - Elevation 12000 mm

PRELIMINARY

Figure 12.3-15. Turbine Building Radiation Zones - Elevation 20000 mm

PRELIMINARY

Figure 12.3-16. Turbine Building Radiation Zones - Elevation 28000 mm

PRELIMINARY

Figure 12.3-17. Turbine Building Radiation Zones - Elevation 35000 mm

PRELIMINARY

Figure 12.3-18. Turbine Building Radiation Zones at Roof Elevation Various

PRELIMINARY

Figure 12.3-19. Radwaste Building Radiation Zones - Elevation -9350 mm

PRELIMINARY

Figure 12.3-20. Radwaste Building Radiation Zones - Elevation -2350 mm

PRELIMINARY

Figure 12.3-21. Radwaste Building Radiation Zones - Elevation 4650 mm

PRELIMINARY

Figure 12.3-22. Radwaste Building Radiation Zones - Elevation 10650 mm

PRELIMINARY

Figure 12.3-22a. Radiation Zones in the Access Tunnel to the Electrical Building – Elevation -2000 mm

PRELIMINARY

Figure 12.3-22b. Radiation Zones in the Access Tunnel to the Electrical Building and Radwaste Building – Elevation 1300 mm

PRELIMINARY

Figure 12.3-23. Nuclear Island Area Radiation Monitors - Elevation -11500 mm

PRELIMINARY

Figure 12.3-24. Nuclear Island Area Radiation Monitors - Elevation -6400 mm

PRELIMINARY

Figure 12.3-25. Nuclear Island Area Radiation Monitors - Elevation -1000 mm

PRELIMINARY

Figure 12.3-26. Nuclear Island Area Radiation Monitors - Elevation 4650 mm

PRELIMINARY

Figure 12.3-27. Nuclear Island Area Radiation Monitors - Elevation 9060 mm

PRELIMINARY

Figure 12.3-28. Nuclear Island Area Radiation Monitors - Elevation 13570 mm

PRELIMINARY

Figure 12.3-29. Nuclear Island Area Radiation Monitors - Elevation 17500 mm

PRELIMINARY

Figure 12.3-30. Nuclear Island Area Radiation Monitors - Elevation 27000 mm

PRELIMINARY

Figure 12.3-31. Nuclear Island Area Radiation Monitors - Elevation 34000 mm

PRELIMINARY

Figure 12.3-32. Turbine Building Area Radiation Monitors - Elevation -1400 mm

PRELIMINARY

Figure 12.3-33. Turbine Building Area Radiation Monitors - Elevation 4650 mm

PRELIMINARY

Figure 12.3-34. Turbine Building Area Radiation Monitors - Elevation 12000 mm

PRELIMINARY

Figure 12.3-35. Turbine Building Area Radiation Monitors - Elevation 20000 mm

PRELIMINARY

Figure 12.3-36. Turbine Building Area Radiation Monitors - Elevation 28000 mm

PRELIMINARY

Figure 12.3-37. Turbine Building Area Radiation Monitors - Elevation 35000 mm

PRELIMINARY

Figure 12.3-38. Turbine Building Area Radiation Monitors at Various Elevations

PRELIMINARY

Figure 12.3-39. Radwaste Building Area Radiation Monitors - Elevation -9350 mm

PRELIMINARY

Figure 12.3-40. Radwaste Building Area Radiation Monitors - Elevation -2350 mm

PRELIMINARY

Figure 12.3-41. Radwaste Building Area Radiation Monitors - Elevation 4650 mm

PRELIMINARY

Figure 12.3-42. Radwaste Building Area Radiation Monitors - Elevation 10650 mm

PRELIMINARY

Figure 12.3-43. Nuclear Island Post Accident Radiation Zones - Elevation -11500 mm

PRELIMINARY

Figure 12.3-44. Nuclear Island Post Accident Radiation Zones - Elevation -6400 mm

PRELIMINARY

Figure 12.3-45. Nuclear Island Post Accident Radiation Zones - Elevation -1000 mm

PRELIMINARY

Figure 12.3-46. Nuclear Island Post Accident Radiation Zones - Elevation 4650 mm

PRELIMINARY

Figure 12.3-47. Nuclear Island Post Accident Radiation Zones - Elevation 9060 mm

PRELIMINARY

Figure 12.3-48. Nuclear Island Post Accident Radiation Zones - Elevation 13570 mm

PRELIMINARY

Figure 12.3-49. Nuclear Island Post Accident Radiation Zones - Elevation 17500 mm

PRELIMINARY

Figure 12.3-50. Nuclear Island Post Accident Radiation Zones - Elevation 27000 mm

PRELIMINARY

Figure 12.3-51. Nuclear Island Post Accident Radiation Zones - Elevation 34000 mm

PRELIMINARY

Figure 12.3-51a. Post Accident Radiation Zones Electrical Building - Elevation 4650 mm

PRELIMINARY

Figure 12.3-51b. Post Accident Radiation Zones Electrical Building - Elevation 9800 mm

PRELIMINARY

Figure 12.3-51c. Post Accident Radiation Zones Electrical Building - Elevation 18000 mm

PRELIMINARY

Figure 12.3-51d. Post Accident Radiation Zones Electrical Building - Elevation 27000 mm

PRELIMINARY

Figure 12.3-51e. Post Accident Radiation Zones, Service Building Floor - Elevation 1300 mm

PRELIMINARY

Figure 12.3-51f. Post Accident Radiation Zones, Service Building Floor - Elevation 4650 mm

PRELIMINARY

Figure 12.3-52. Reactor, Fuel, & Control Buildings Personnel Egress Routes - Elevation –11500 mm

PRELIMINARY

Figure 12.3-53. Reactor, Fuel, & Control Buildings Personnel Egress Routes - Elevation -6400 mm

PRELIMINARY

Figure 12.3-54. Reactor, Fuel, & Control Buildings Personnel Egress Routes - Elevation –1000 mm

PRELIMINARY

Figure 12.3-55. Reactor, Fuel, & Control Buildings Personnel Egress Routes - Elevation 4650 mm

PRELIMINARY

Figure 12.3-56. Reactor, Fuel, & Control Buildings Personnel Egress Routes - Elevation 9060 mm

PRELIMINARY

Figure 12.3-57. Reactor, Fuel, & Control Buildings Personnel Egress Routes - Elevation 13570 mm

PRELIMINARY

Figure 12.3-58. Reactor, Fuel, & Control Buildings Personnel Egress Routes - Elevation 17500 mm

PRELIMINARY

Figure 12.3-59. Reactor, Fuel, & Control Buildings Personnel Egress Routes - Elevation 27000 mm

PRELIMINARY

Figure 12.3-60. Reactor, Fuel, & Control Buildings Personnel Egress Routes - Elevation 34000 mm

PRELIMINARY

Figure 12.3-61. Radwaste Building Personnel Egress Routes - Elevation -9350 mm

PRELIMINARY

Figure 12.3-62. Radwaste Building Personnel Egress Routes - Elevation -2350 mm

PRELIMINARY

Figure 12.3-63. Radwaste Building Personnel Egress Routes - Elevation 4650 mm

PRELIMINARY

Figure 12.3-64. Radwaste Building Personnel Egress Routes - Elevation 10650 mm

PRELIMINARY

Figure 12.3-65. Turbine Building Personnel Egress Routes - Elevation -1400 mm

PRELIMINARY

Figure 12.3-66. Turbine Building Personnel Egress Routes - Elevation 4650 mm

PRELIMINARY

Figure 12.3-67. Turbine Building Personnel Egress Routes - Elevation 12000 mm

PRELIMINARY

Figure 12.3-68. Turbine Building Personnel Egress Routes - Elevation 20000 mm

PRELIMINARY

Figure 12.3-69. Turbine Building Personnel Egress Routes - Elevation 28000 mm

PRELIMINARY

Figure 12.3-70. Turbine Building Personnel Egress Routes - Elevation 35000 mm

PRELIMINARY

Figure 12.3-70a. Turbine Building Personnel Egress Routes at Various Elevations

PRELIMINARY

Figure 12.3-71. Reactor Building Rooms Adjacent to the RWCU/SDC and FAPCS Demineralizers - Elevation -11500 mm

PRELIMINARY

Figure 12.3-72. Reactor Building RWCU/SDC and FAPCS Demineralizer Rooms and Adjacent Rooms - Elevation -6400 mm

PRELIMINARY

Figure 12.3-73. Reactor Building Rooms Adjacent to the RWCU/SDC and FAPCS Demineralizers - Elevation -1000 mm

PRELIMINARY

Figure 12.3-74. Areas Requiring Post-Accident Access - Elevation -11500 mm

PRELIMINARY

Figure 12.3-75. Areas Requiring Post-Accident Access - Elevation -6400 mm

PRELIMINARY

Figure 12.3-76. Areas Requiring Post-Accident Access - Elevation from -2000 to -1000 mm

PRELIMINARY

Figure 12.3-77. Areas Requiring Post-Accident Access - Elevation 1300 mm

PRELIMINARY

Figure 12.3-78. Areas Requiring Post-Accident Access - Elevation 4650 mm

PRELIMINARY

Figure 12.3-79. Areas Requiring Post-Accident Access - Elevation 9060 mm

PRELIMINARY

Figure 12.3-80. Areas Requiring Post-Accident Access - Elevation 9800 mm

PRELIMINARY

Figure 12.3-81. Areas Requiring Post-Accident Access - Elevation 13570 mm

PRELIMINARY

Figure 12.3-82. Areas Requiring Post-Accident Access - Elevation 17500 mm

PRELIMINARY

Figure 12.3-83. Areas Requiring Post-Accident Access - Elevation 18000 mm

PRELIMINARY

Figure 12.3-84. Areas Requiring Post-Accident Access - Elevation 27000 mm

PRELIMINARY

Figure 12.3-85. Areas Requiring Post-Accident Access (Electrical Building) - Elevation 27000 mm

PRELIMINARY

Figure 12.3-86. Areas Requiring Post-Accident Access - Elevation 34000 mm

PRELIMINARY

12.4 DOSE ASSESSMENT

This section discusses the occupational radiation dose assessment for the ESBWR facility. An occupational dose assessment is required by Regulatory Guide 1.70 (Reference 12.4-1) following the format requirements of Regulatory Guide 8.19 (Reference 12.4-2). Subsections 12.4.1 through 12.4.6 discuss the dose assessment categories following the format guidance in Reference 12.4-2. Tables 12.4-2 through 12.4-7 provide tabulated numerical collective dose estimates for the individual assessment categories discussed in the subsections. Table 12.4-1 provides a summary and overall occupational collective dose assessment in units of person-Sievert per year and man-rem per year.

The estimated annual occupational radiation exposures are developed within the following collective occupational dose assessment categories described in Reference 12.4-2:

(1) Reactor Operations and Surveillance

(2) Routine Maintenance

(3) Waste Processing

(4) Refueling Operations

(5) Inservice Inspection

(6) Special Maintenance

The occupational dose assessment is a significant element in supporting the facility design and methods of operation to ensure occupational radiation exposures are ALARA. The dose assessment performed herein depends on estimates of occupancy, dose rates in various occupied areas, frequency of operations, and the number of personnel participating in reactor operations and surveillance, routine maintenance, waste processing, refueling, inservice inspection and special (unscheduled) maintenance. Facility personnel include station and utility employees, as well as contract workers. In this assessment, no differentiation is made between numbers of station, utility or contract workers used to perform specific tasks since the COL holder is responsible for the overall plant staffing makeup. The occupations for these personnel may include maintenance, operations, health physics, supervision and engineering, although no differentiation is made in this assessment due to the above reason.

To estimate the total annual radiation dose to personnel, dose rate estimates (in units of μSv/hr) for the performance of duties in the assessment categories are developed using a variety of available methods including ESBWR radiation zoning levels, available technical reports and experiential data based on previous and current BWR plant designs and operational information (References 12.4-3 to 12.4-8). Person-hours expended in performance of the various tasks are estimated in a similar manner. The person-hours defined within this assessment are the estimated person-hours spent in a significant (≥ 1 μSv/hr) radiation zone, and should not be compared with overall person-hours required for the normal operational activities of a nuclear power plant. Estimates of the dose rates and person-hours applied to ESBWR activities are made by extrapolating results of previous studies/information for the BWR and ABWR product lines and adjusting to the lowered equipment and component utilization of the simplified systems of the ESBWR.

PRELIMINARY

For example, the dose rates and maintenance person-hours due to elimination of the recirculation loop systems in ESBWR is considered both from a reduced drywell radiation signature, as well as decreased maintenance requirements from the absent recirculation loop components. In other cases, data is extrapolated factoring the maintenance impact of the elimination of active safety systems such as high pressure coolant injection (HPCI), reactor core isolation cooling (RCIC), and residual heat removal (RHR) systems in favor of the passive safety design of the ESBWR. Where ESBWR radiation zone map values are employed to estimate dose rates, a representative "effective" dose rate for a given area or activity was employed. In some cases, experiential or operational dose rates and person-hour data are employed to estimate the collective occupational dose after correction for ESBWR design parameters.

The analytical method used for the person-Sievert assessment is based on the product of the estimated occupancy time (i.e., person-hours per year) and the estimated effective dose rate (μSv/hr) determined using the methods described above. The collective doses in each of the assessment categories are added and shown in the associated tables, and the total for all categories summed in Table 12.4-1.

The occupational dose assessment collective doses are based on a 24 month refueling cycle.

In this occupational dose assessment, there is no separate determination of doses due to airborne activity. Past experience demonstrates that the dose from airborne activity is not a significant contributor to the total collective dose when compared to overall direct radiation doses evaluated in this assessment. As such, the estimated collective doses in this evaluation represent the result of Deep Dose Equivalent (DDE) exposures only; no inhalation or airborne dose contributions are assumed.

The assessment for each of the collective dose categories is given below.

12.4.1 Reactor Operations and Surveillance

During plant operation, the performance of various systems and components is routinely monitored by operator tours through the plant during each shift. These inspections include monitoring rotating machinery for leaks, proper operation, and ensuring instrumentation readings lie within acceptable limits. Also, operation of some manual valves may require personnel to briefly enter radiation fields. In some cases, minor repairs or equipment adjustments may also be required to be performed. Health physics surveys and work party monitoring are considered in this category. Because the drywell is inaccessible during full power operations, testing, and surveillance activities in the drywell are performed after a shutdown or during a refueling outage. Some non-routine tasks such as clean up of radioactive spills or conducting fuel sipping are not generally planned, but require performance for continued optimal plant operations and maintenance of an effective ALARA program.

Some examples of routine operation and surveillance activities are:

- Routine inspections/performance tests of plant components and systems
- Unidentified leak checks
- Operation of manual valves

PRELIMINARY

- Reading of instruments
- Routine health physics patrols and surveys
- Security sweeps or patrols
- Decontamination of equipment or plant work areas
- Calibration of electrical and mechanical equipment
- Chemistry sampling and analysis

These activities may be conducted in the RB, FB, RW or TB. The significant reductions in component and instrumentation requirements due to the emphasis on passive safety systems in lieu of the active systems used in current BWRs, combination of systems such as reactor water cleanup and shutdown cooling, and elimination of systems such as the traversing in-core probe (TIP) system, result in a significant reduction in surveillance, monitoring and testing work.

Exposure from these miscellaneous surveillance, testing, and monitoring activities during normal operation is due to N-16, as well as reactor coolant corrosion and fission products. Additional shielding is provided to reduce radiation levels in routinely occupied areas during power operation from N-16 sources. The ESBWR is expected to have reduced general radiation levels during operation compared to the typical BWR due to more stringent water chemistry controls, two percent reactor water clean up capacity (as discussed in Subsection 5.4.8.1.2), titanium or stainless steel condenser tubes, and low cobalt usage.

Estimates of the collective doses to operations and surveillance personnel have been made by extrapolating results of previous studies for BWRs to the reduced equipment and component utilization of the simplified systems of the ESBWR. Person-hour estimates of activities performed in this category, the associated dose rates, and the collective dose from these activities are shown in Table 12.4-2.

12.4.2 Routine Maintenance

Routine inspection and maintenance are required for mechanical and electrical components throughout the operation of a power plant. This category summarizes collective dose incurred during routine scheduled maintenance and inspection activities, which in some cases, can be performed while the plant is in normal operation. The special maintenance category reviewed in Section 12.4.6 sums collective dose associated with specialized procedures that can be performed only during refueling outages.

Simplified systems result in a significant reduction in the total number of valves and instrumentation located in the drywell with an accompanying decrease in maintenance time. Valve design is also enhanced. For example, operation of the GDCS requires reactor depressurization. This depressurization utilizes eight depressurization valves (DPVs) with four located on the steam pipes and four located on stub tubes off the RPV shared with the ICS lines in the upper drywell. In the ESBWR, simplifying systems in the reactor building result in a significant reduction in the total number of valves and an attendant decrease in maintenance time. This work includes all valve work, minor maintenance, and CRD hydraulic line work. Use of live-load valve packing to control stem leakage reduces maintenance and worker radiation exposure for valve repair. The ESBWR RB has been designed to provide for ease of

maintenance with overhead lifts, coordinated hatchways and ample space to maintain in-place equipment. It has been arranged to take advantage of the reduced quantity of equipment associated with the simpler reactor systems. The building arrangement features numerous dose-reducing benefits and improved equipment maintenance times. Equipment is more accessible which facilitates improved access control and maintenance. The building features enhanced accessibility on all floors. In addition, most of the equipment in the reactor building is removable. The combined RWCU/SDC system purifies reactor coolant during normal operation and shutdown. Two 100% redundant RWCU/SDC trains are provided in the ESBWR design that uses state-of-the-art water treatment technology to significantly reduce the concentration of radioactive material in the coolant. The system is constructed of stainless steel for those portions in contact with the reactor coolant. For system piping, smooth bends are used instead of welds and the nuclear grade pipes are electro-polished to reduce corrosion product buildup.

RWCU/SDC System maintenance work consists of inspection of two pumps per year in each train. The FAPCS uses a similar design philosophy for its components. Although it is assumed that some maintenance may be conducted during normal operation, certain portions of the RWCU/SDC System and FAPCS in the FB may require additional maintenance during refueling outages. Maintenance activities for other systems in the RB and FB are shown in Table 12.4-3.

For routine maintenance in the RW, the ESBWR design implements the use of skid-mounted process systems for radwaste processing, thereby reducing the maintenance requirements to the permanently installed systems.

Due to the high radiation from N-16 in the TB, maintenance on major systems must be performed when the plant is shutdown. Maintenance on supporting systems can be performed if there exists a sufficient decay period for the N-16.

Table 12.4-3 provides a breakdown of the collective doses associated with overall routine inspection and maintenance activities.

12.4.3 Waste Processing

Radioactive waste is processed in systems housed in the RW, which consists of the LWMS and the SWMS. The LWMS is designed to segregate, collect, store, and process radioactive liquids generated during operation. The SWMS is designed to control, collect, handle, process, package and temporarily store wet and dry solid radioactive waste prior to shipment offsite. The processing systems consist of pumps, valves, tanks and process systems (skid-mounted) that are remotely operated from a central RW Control Room. In the LWMS, radioactive contaminants are removed and the bulk of the liquid is purified and either returned to the condensate storage tank or discharged to the environment, minimizing overall liquid waste. The radioactivity removed from the liquid waste is concentrated in filter media, ion exchange resins, and concentrated waste. The filter sludge, ion exchange resins, and concentrated waste are sent to the SWMS for further processing. The output of the radwaste processing systems generally consists of DAW, wet solid waste in high integrity containers (HIC), and mixed wastes, which are both radiologically and chemically contaminated.

The dose projections below are based on representative systems currently used in the industry. Dose from surveillance and maintenance activities in the RW are captured in the other respective categories of this analysis.

PRELIMINARY

More of the radwaste operations involve remote handling than in a typical BWR. General RW work consists of pump and valve maintenance, shipment handling, radwaste management and general clean up activity. Maintenance collective dose estimates are captured in Section 12.4.2. The LWMS collects liquid wastes from equipment drains, floor drains, filter backwashes and other sources within the facility. Some examples of SWMS activities include movement of casks and liners, filter handling, resin transport, and movement or reconfiguration of radwaste processing skids. Generally, much of the activity is remotely performed and controlled by operators in the RW Control Room. Dose estimates for the collection, packaging and shipment of radwaste quantities are based on the assumptions below.

Operation of the RW Control Room is assumed to occur approximately once per day for one shift in a maximum dose rate of 10 μSv/hr. Processing and packaging of DAW is assumed to occur once a day for two hours using two workers in a dose field of 50 μSv/hr. This activity is assumed to occur three times per week. Shipments of concentrated wet solid waste in HICs are assumed to occur once per week for four hours in a dose field of 50 μSv/hr using four workers. DAW shipments are assumed to occur once per month for eight hours in a dose field of 50 μSv/hr using three workers. Finally, miscellaneous activities in high dose rate areas such as valve line-ups or filter changes are assumed to be required approximately 4 person-hours per week in an average dose rate field of 150 μSv/hr.

The estimated annual collective doses associated with waste processing operations appear in Table 12.4-4.

12.4.4 Refueling Operations

In the ESBWR design, refueling operations are conducted in two general areas. The fuel building houses the SFP and various equipment used for the receipt of new fuel assemblies. Space is also provided for fuel assembly receipt inspection and the installation of fuel channels on the new fuel assemblies. When new fuel assemblies are readied for transfer to the reactor, the assemblies are transferred using the IFTS, which is located in the upper portion of the RB. Here the new fuel assemblies are kept in the buffer pool until the refueling outage. This dual pool system is similar to that implemented in the BWR/6 product line. During the refueling outage, new fuel assemblies are placed in the reactor core using the refueling machine, the core shuffled, and spent fuel removed to the RB buffer pool. At this time, control rods or other incore components may be replaced. Spent fuel assemblies, which were removed from the core, are then transferred through the IFTS to the FB SFP. The fuel building also contains facilities for the transfer of spent fuel assemblies into casks for possible storage at an onsite independent spent fuel storage installation.

Prior to commencing refueling operations, the drywell and reactor vessel heads must be disassembled and removed. Reactor vessel access and reassembly exposure times are reduced by use of a special stud tensioner for the 84 RPV head bolts. Underwater transfer of the dryer, chimney/partitions, and chimney head/separator decreases exposures during refueling operations. The improved fuel, inspection equipment, and increased use of remote operations significantly reduce the refueling floor exposure. Drywell access and RPV disassembly and reassembly in conventional BWRs typically require 4,500 person-hours of work at an effective dose rate of 30 μSv/hr. The ESBWR work involves the use of an automated stud tensioner for the RPV top head. This equipment coupled with other automatic equipment available is

PRELIMINARY

estimated to reduce the drywell access and RPV vessel disassembly/reassembly time to 1,200 person-hours.

ESBWR refueling is accomplished via the refueling bridge. Time for refueling operations including control rod replacement is reduced from a typical BWR value of 4,400 person-hours to approximately 1,500 person-hours. It is estimated that approximately 500 person-hours are spent in transfer of the spent fuel and other replaced components to the buffer pool in the RB, and 1,000 person-hours is spent transferring the spent fuel and removed components through the IFTS to the SFP in the FB. General area RB refueling floor and FB radiation zone effective values of 25 μSv/hr are used for the dose projections. An additional 4,000 person-hours is estimated for an optional spent fuel transfer campaign into storage casks for possible onsite storage in an independent spent fuel storage installation, if utilized. Because cask loading operations are conducted entirely underwater, an effective dose rate value of 5 μSv/hr is used for the cask loading and transfer process. The total Person-Sv associated with the above refueling operations is shown in Table 12.4-5.

12.4.5 Inservice Inspection

The ASME Code, Section XI, "Rules for Inservice Inspection of Nuclear Power Plant Components", requires extensive inspections of the RPV, reactor coolant pressure boundary, containment penetrations, pressure retaining components, core support components, and internal components. All welds associated with the reactor coolant pressure boundary are inspected. In addition, safety-related valves are also subject to ISI. Because the ESBWR design does not utilize safety-related pumps, no pumps are included in the ISI program. In addition to the RPV, portions of the main steam, feedwater, SLC system, RWCU/SDC system, ICS and GDCS are also inspected. The inspections, generally performed during refueling outages, usually consist of pressure tests (leakage or hydrotest), visual inspections, and non-destructive examinations. The methods used in the tests and inspections include ultrasonic, visual, surface, eddy current or radiographic testing, and other non-destructive testing (NDE) methods. The Code defines the ISI interval as a 10-year period and sets requirements for each one-third interval (each 40 months). In general, at least 25 percent (with credit for no more than 33-1/3 percent) of the specified inspections must be performed in each 40-month testing interval. The amount of inspection required for an area varies according to the category, but is explicitly defined in the ASME Code, Section XI.

The drywell design includes many features to facilitate ISI. The ESBWR design incorporates the following improvements over the BWR/6 product line:

- Elimination of 14 nozzle inspections at 2 per year,
- Elimination of shield penetration and shield plug removal,
- Allowance for specific access past insulation areas into inspection areas.

Additional improvements include the use of stand-off mirror type insulation around the reactor vessel, use of remote-operated mechanical devices for inspection of the RPV body and nozzle welds, removable pipe insulation, and provisions for additional ISI operations laydown space. The use of natural circulation simplifies the design within the drywell by eliminating the recirculating loops, pumps, pipe supports, hangers, and shock suppressors. Due to the elimination of active safety systems such as HPCI, LPCI, RHR and RCIC, the required inspection of attached piping

and valve systems result in significantly reduced expenditure of person-hours compared to conventional BWRs. Due to the larger vessel used in the ESBWR, the total vessel weld length inspection may increase by up to 40% as compared to a conventional BWR. Modern robotic methods used for vessel ISI such as automated turtles for inspection should result in lowered effective dose rates for the inspection activities.

Overall, it is estimated that by elimination of the recirculation system and active safety systems inspection requirements and the use of facilitated automated inspection, person-hours expended in ISI is reduced by almost a factor of two from conventional BWRs. The person-hours reduction is approximately 1,500 person-hours during a refueling outage (750 person-hours per year) at approximately half the conventional effective drywell dose rate or 60 μSv/hr, and is estimated at 30 μSv/hr for inspections in the reactor building.

Based on an extrapolation of estimates performed for conventional BWRs, the ISI collective dose estimates associated with the ESBWR are shown in Table 12.4-6.

12.4.6 Special Maintenance

Maintenance that goes beyond routine scheduled maintenance or cannot be performed without significant expenditure of resources in non-negligible radiation fields is considered to be special maintenance. In addition to maintenance, this category includes both the modification of equipment to upgrade the plant and repairs to failed components. A review of the primary special maintenance areas is provided below.

Drywell

The Nuclear Boiler System (NBS) supplies steam to the main turbine. The main steam isolation valves (MSIVs) are located in the upper drywell area (4 valves) and in the RB outboard of the primary containment isolation wall (4 valves). Because the drywell is inaccessible during normal operation, special maintenance activities are primarily conducted in the drywell during refueling outages. In the ESBWR design, deletion of the recirculation pumps and associated piping has a major effect on the in-drywell dose rates experienced during maintenance procedures. This effect has already been demonstrated in the ABWR fleet currently in operation.

The primary drywell systems that are considered to be in this category are:

- MSIVs;
- Safety and Safety Relief Valve (SV/SRV);
- FMCRDs;
- Local Power Range Monitor (LPRM) /Automated Fixed In-Core Probe (AFIP);
- Miscellaneous Pumps and Valves;
- Drywell Instrumentation; and
- Other In-Drywell Systems Including Passive Systems.

The overall maintenance scope and radiation environment associated with work on these major components is described below.

PRELIMINARY

The ESBWR design incorporates three specific features to reduce occupational exposures in the MSIV maintenance areas both in the drywell and reactor building:

- Improved MSIV leakage rate test procedures;
- Improved maintenance procedures with some procedures automated; and
- Reduced radiation fields, primarily due to the absence of the recirculation piping.

The MSIVs require periodic testing and maintenance to ensure proper action and leak tightness. Maintenance operations incorporate an improved seat grinding system and other special tools. Overall maintenance is reduced by use of the MSIV overhauling devices, use of main steam line plugs and the improved MSIV grinding system. Use of these automatic systems results in an additional overall reduction in maintenance times of approximately 50% compared to conventional BWRs. This, along with improved drywell access, significantly reduces the maintenance time necessary for MSIV repair. Additionally, the ESBWR is designed to limit the use of cobalt bearing materials on moving components that have historically been identified as major sources of reactor coolant contamination. Early studies on dose rates during MSIV maintenance showed increases in dose rate directly proportional to recirculation line activity. The ESBWR does not have these recirculation lines, thus removing the most significant shutdown source of radiation in the drywell. In addition, deposited activity in the feedwater lines is expected to be lower than typical BWRs owing to an enhanced condensate system with full cleanup of all condensate water, enhanced water quality and chemistry procedures, and titanium or stainless steel condenser tubes which limit the transfer of metallic ion contamination to feedwater and lessen activation product radioactivity. Maintenance in the drywell/steam tunnel is expected to be approximately 1,600 person-hours at an effective dose rate of 18 μSv/hr and maintenance in the reactor building is expected to be approximately 2,600-person hours at an effective dose rate of 13 μSv/hr.

The ESBWR SRV design does not vary significantly from past designs. However the natural recirculation core flow and consequent elimination of the recirculation piping reduces maintenance doses accordingly. Maintaining the SV and SRVs consists primarily of minor maintenance or removal of valves to a maintenance facility. Overhead tracks and in-place removal equipment is provided in the ESBWR for removal/replacement of the 18 SV/SRVs to an external maintenance facility. This work is estimated to require 200 person-hours per outage in an effective radiation field of 60 μSv/hr.

Control rod drive maintenance is significantly reduced in the ESBWR as compared to hydraulic systems used in most BWRs with the utilization of FMCRDs. These drives vary most significantly in that they eliminate scram discharge lines and the associated radiation in and around areas where the lines are routed. Due to the significantly modified design of the FMCRD, only two to four drives and 20 motors are assumed to be maintained per outage. For maintenance on four FMCRDs, estimated work consists of 64 person-hours undervessel preparation, 80 person-hours for FMCRD removal and re-installation, 200 person-hours for motor removal and re-installation, and 64 person-hours for cleanup. Due to the removal of the recirculation pumps and lines, the overall undervessel effective dose rate is estimated to be approximately 65 μSv/hr.

PRELIMINARY

In the ESBWR, a design improvement for the Neutron Monitoring System (NMS) involves replacing the conventional BWR TIP system with AFIP system for calibrating the LPRMs. Eliminating the complex drive and indexer mechanism with associated controls, which are required to insert and withdraw the TIPs from the core region, substantially improves operability, maintainability, and reduces occupational radiation exposures. The AFIP system is located within the LPRM "string" assembly and both systems are replaced concurrently. LPRM design has been improved and currently each monitor lasts up to seven years. LPRM/AFIP assemblies are removed from the vessel while it is open and placed in the SFP. After decay, the assemblies are cut up into smaller segments and disposed based on the specific activity associated with the segments. The ESBWR uses 64 LPRM/AFIP string assemblies, and it is assumed that 8 assemblies are replaced in an outage. To perform this work, it is assumed 3 hrs per assembly to remove and replace with a crew of two for 48 person hours at an effective dose rate of 100 µSv/hr.

In addition to the MSIV and SRV major valve components, simplified systems result in a significant reduction in the total number of supporting system valves and instrumentation located in the drywell with an accompanying decrease in maintenance time. The elimination of HPCI, RCIC and RHR type active systems and replacement with passive systems that use relatively few valves and no pumps result in a markedly shorter time for drywell maintenance activities. The estimated time to perform maintenance on miscellaneous drywell valves is 1,500 person-hours at 40 µSv/hr. The estimated time to perform maintenance on miscellaneous drywell instrumentation is 1,000 person-hours at 50 µSv/hr.

Other remaining drywell maintenance activities such as passive safety system maintenance, scaffolding erection and dismantling, and snubber inspection/replacement are conservatively estimated to require an additional 1,300 person-hours in an effective dose rate field of 50 µSv/hr.

Reactor Building

The RB surrounds the drywell (primary containment) and houses the support systems for the drywell components. The RB has been arranged to take advantage of the reduced quantity of equipment associated with the simpler ESBWR systems. The building arrangement features numerous dose-reducing benefits and improved equipment maintenance durations. Equipment is more accessible which facilitates improved access control and maintenance. The building features enhanced accessibility on all floors. Equipment access is provided for all surveillance, maintenance and replacement activities with local service areas and laydown space for periodic inspections. Lifting points, monorails and other installed devices are provided to facilitate equipment handling and minimize the need for re-rigging individual equipment movements. Valve galleries are provided to minimize personnel exposure during system operation or preparation for maintenance.

The major special maintenance activities that occur in the reactor building are:

- MSIV Rework;
- FMCRD Rebuild Work;
- CRD HCU Work;
- RWCU/SDC System Maintenance;

PRELIMINARY

- Instrumentation Maintenance Testing and Repair; and
- Additional Miscellaneous Work to Valves and Systems.

As in the drywell, MSIV related exposure in the RB comes from maintenance, rework and testing of the MSIVs during the plant refueling shutdown. As indicated above in relation to MSIV work in the drywell, reductions in maintenance are expected from the use of improved procedures. Maintenance in the RB is expected to require 2,600 person-hours per cycle at an effective dose rate of 13 μSv/hr.

While the FMCRD are removed from the undervessel area of the drywell, the drives themselves are rebuilt in a special area in the RB. Assuming the same four drives/cycle are rebuilt as removed from the drywell, rebuilding estimates are 60 hours per drive. It is assumed the four drives are rebuilt in the control rod drive maintenance equipment room at an effective dose rate of 30 μSv/hr.

In addition to maintenance during normal operation, some of the CRD HCUs or the associated piping may be required to be serviced or rebuilt during an outage. The major task is servicing the HCUs in which 50 units are assumed to require service at 3 hrs/unit using a crew of four for approximately 600 person-hours at an effective dose rate of 30 μSv/hr in the HCU areas or maintenance room.

RWCU/SDC system maintenance work, which cannot be performed during normal operation, consists of inspection for two pumps and associated heat exchangers in each train. In the RWCU/SDC system, the ESBWR uses canned pumps in both trains with an estimated maintenance of 100 person-hours per pump for a total of 400 person-hours/cycle. This work is assumed to be performed in the RWCU/SDC pump rooms at an effective dose rate of 150 μSv/hr.

Reactor building instrumentation, maintenance, and repair work that cannot be performed during normal operation is assumed to require 600 person-hours/year at an effective dose rate of 30 μSv/hr

Additional RB outage maintenance items such as passive system maintenance, minor valve, pump or other equipment maintenance is assumed to involve 3400 person-hours/year at an average dose rate of 8 μSv/hr.

Turbine Building

Although some turbine maintenance may be conducted during plant operation, the N-16 radiation produced during normal operation prohibits significant maintenance work until the plant is shutdown or in an outage. The major activities involving maintenance on TB components associated with non-negligible radiation fields are:

- Turbine Overhaul
- Valves/Pumps Maintenance
- Condensate Treatment
- Other Miscellaneous Turbine Work

With the use of improvements in the automation of turbine maintenance and overhaul procedures, a simpler overall system design, titanium or stainless steel condenser tubes, and

PRELIMINARY

redesigned offgas system as compared to a conventional BWR, turbine overhaul work is estimated to require approximately 24,000 person-hours during an outage. An effective dose rate value of 3 μSv/hr is assumed for turbine overhaul work.

The valve and pump maintenance requirements for the ESBWR do not vary significantly over current plants; although the larger turbine and generator systems may require slightly more work. As such, the total hours for this type of work are assumed to be approximately the same as conventional turbine systems when including the benefits of titanium or stainless steel condenser tubes, improved valves, maintenance jigs, and automated devices. The man-hour estimates for turbine valve and pump maintenance time is approximately 2,000 person-hours per outage. In the ESBWR, assuming maintenance of high operating water quality standards and a significant reduction in cobalt bearing materials, the overall effective dose rate is estimated at 39 μSv/hr for this work.

In the design of the turbine condenser system, the condenser tube material (with compatible tubesheet material) is corrosion resistant (titanium or stainless steel) which reduces leakage of corrosion products into the C&FS. Low pressure feedwater drains from the feedwater heaters are cascaded back to the condenser; thus, all corrosion products from these drains are filtered via condensate filter/demineralizers before returning to the RPV. Work on the turbine condenser and associated condensate system is assumed to require 2,000 person-hours per outage. Again, assuming maintenance of high operating water quality standards, and a significant reduction in cobalt bearing materials, the overall effective dose rate is estimated at 35 μSv/hr for this work

Other work in the TB is assumed to expend approximately 12,000 hours in a cycle conducted in both outage and non-outage conditions and is accounted for in the routine maintenance section. This work is assumed to take place in shielded locations at an effective dose rate of 1 μSv/hr.

Table 12.4-7 provides the estimated doses due to special maintenance operations.

12.4.7 Overall Plant Doses

The estimated annual personnel doses associated with the six activity categories discussed above are summarized in Table 12.4-1.

12.4.8 COL Information

None.

12.4.9 References

12.4-1 USNRC Regulatory Guide 1.70 Revision 3, "Standard Format and Content of Safety Analysis Reports for Nuclear Power Plants (LWR Edition)," November 1978.

12.4-2 USNRC Regulatory Guide 8.19 Revision 1, "Occupational Radiation Dose Assessment in Light-Water Reactor Power Plants Design Stage Man-Rem Estimates," June 1979.

12.4-3 Knecht, P.D., "BWR/6 Drywell and Containment Maintenance and Testing Access Time Estimates", GE Report NEDE-23819, May 1978.

12.4-4 Knecht, P.D., "Maintenance Access Time Estimates, BWR/6 Radwaste Building", GE Report NEDE-23996-2, May 1979.

PRELIMINARY

12.4-5 Knecht, P.D., "Maintenance Access Time Estimates, BWR/6 Auxiliary and Fuel Buildings", GE Report NEDE-23996-1, May 1979.

12.4-6 "Study of Advanced BWR Features, Plant Definition/Feasibility Results", Volume III, Appendix Part G, GE Report NEDE-24679, October 1979.

12.4-7 Knecht, P.D., "Work at Power Access Time Estimates BWR/6 Containment, Auxiliary, Fuel, Radwaste and Turbine Buildings", GE Report NEDE-23996-3, May 1979.

12.4-8 "GE Advanced Boiling Water Reactor (ABWR) First of a Kind Engineering Program - ABWR FOAKE Occupational Exposure", Advanced Reactor Corporation Report 24156-1A23-6440-0001 Revision 1, August 1996.

PRELIMINARY

Table 12.4-1

Projected ESBWR Total Occupational Radiation Exposure Estimates Based on 24 Month Refueling Cycle

Activity	Estimated Annual Time (person-hours)	Projected Annual Collective Dose person-Sv/year (man-rem/year)	Percent of Total
Reactor Operations and Surveillance (See Table 12.4-2)	4,923	0.101 (10.14)	12.75
Routine Inspection and Maintenance (See Table 12.4-3)	8,010	0.158 (15.81)	19.89
Waste Processing (See Table 12.4-4)	04,024	0.134 (13.40)	16.84
Refueling (See Table 12.4-5)	3,350	0.034 (3.40)	4.28
Inservice Inspection (See Table 12.4-6)	766	0.033 (3.29)	4.13
Special Maintenance (See Table 12.4-7)	22,858	0.335 (33.48)	42.11
Total	43,931	0.795 (79.49)	100%

PRELIMINARY

Table 12.4-2

Occupational Dose Estimates During Operation and Surveillances

Facility Area/Task/Activity	Estimated Average Dose Rate, (µSv/hr)	Estimated Annual Time (person-hours)	Projected Annual Collective Dose, person-Sv (man-rem)
Primary Containment			
None			
Reactor Building			
Routine Operator, Chem, HP and Security Surveillances	8	2,190	0.0175 (1.75)
CRD/HCU Surveillance	150	73	0.011 (1.1)
RWCU/SDC Surveillance	150	73	0.011 (1.1)
Passive Systems Surveillance	30	183	0.0055 (.0.55)
I&C Surveillance/Testing	8	183	0.0015 (0.15)
Outside Steam Tunnel	30	183	0.0055 (0.55)
Nonroutine Spill Clean-up	30	96	0.0029 (0.29)
Fuel Building			
Routine Surveillances	8	365	0.0029 (0.29)
General Fuel Related Activities - Fuel Receipt/Processing/ Channeling	8	365	0.0029 (0.29)
FAPCS Surveillances	150	37	0.0056 (0.56)
Nonroutine Fuel Sipping	30	80	0.0024 (0.24)
Radwaste Building			
See Table 12.4-4 Waste Processing			
Turbine Building			
Routine Operator, HP and Security Surveillances Through Accessible Areas.	30	1,095	0.0329 (3.29)
Total		4,923	0.1014 (10.14)

Note: Person-hours for jobs which can only be performed during refueling outages (once every 24 months) are twice the annual person-hours shown in this table.

PRELIMINARY

Table 12.4-3

Occupational Dose Estimates During Routine Maintenance

Facility Area/Task/Activity	Estimated Average Dose Rate, (µSv/hr)	Estimated Annual Time (person-hours)	Projected Annual Collective Dose, person-Sv (man-rem)
Primary Containment			
None			
Reactor Building			
RWCU/SDC Pumps/Motors	150	150	0.0225 (2.25)
RWCU/SDC Valves	150	100	0.015 (1.5)
CRD HCU	30	100	0.003 (0.3)
Passive Systems (ICS, GDCS, PCCS) Valves	30	100	0.003 (0.3)
Passive System Pools	30	100	0.003 (0.3)
Instrumentation	30	300	0.009 (0.9)
Fuel Building			
FAPCS Filter/Demin	150	60	0.009 (0.90)
FAPCS Pumps/Motors	30	80	0.0024 (0.24)
FAPCS Valves	30	80	0.0024 (0.24)
Fuel Pools, Racks, Casks	30	250	0.0075 (0.75)
Radwaste Building			
RW Reverse Osmosis	150	150	0.0225 (2.25)
RW Demins	150	80	0.0120 (1.20)
RW Tanks	150	225	0.0338 (3.38)
RW Pumps	30	40	0.0012 (0.12)
RW Valves	30	70	0.0021 (0.21)
RW Instrumentation	30	125	0.0038 (0.38)
Turbine Building			
Miscellaneous Turbine Building Work in Accessible Areas at Power	1	6,000	0.006 (0.60)
Total		8,010	0.1581 (15.81)

Note: Person-hours for jobs which can only be performed during refueling outages (once every 24 months) are twice the annual person-hours shown in this table.

PRELIMINARY

Table 12.4-4

Occupational Dose Estimates During Waste Processing

Facility Area/Task/Activity	Estimated Average Dose Rate, (µSv/hr)	Estimated Annual Time (person-hours)	Projected Annual Collective Dose, person-Sv (man-rem)
Radwaste Building			
Control Room Operation of LWMS/SWMS and other RW related operational activities	8	2,080	0.0166 (1.66)
DAW Processing/Packaging	50	624	0.0312 (3.12)
Radwaste (HIC) Processing/ Shipments	50	832	0.0416 (4.16)
DAW Shipments	50	288	0.0144 (1.44)
Miscellaneous High Dose Rate Activities	150	200	0.03 (3.00)
Total		4024	0.134 (13.4)

Note: Person-hours for jobs which can only be performed during refueling outages (once every 24 months) are twice the annual person-hours shown in this table.

PRELIMINARY

Table 12.4-5

Occupational Dose Estimates During Refueling Operations

Facility Area/Task/Activity	Estimated Average Dose Rate, (µSv/hr)	Estimated Annual Time (person-hours)	Projected Annual Collective Dose, person-Sv (man-rem)
Reactor Building			
Drywell access RPV Disassembly/ Reassembly	30	600	0.018 (1.8)
Refueling (Fuel assembly /component transfer to buffer pool/core shuffle)	25	250	0.006 (0.6)
Fuel Building			
Refueling (Fuel assembly transfer to spent fuel pool)	25	500	0.013 (1.3)
Fuel transfer to Independent Fuel Storage Facility (if utilized)	5	2,000	0.01 (1.0)
Total		3,350	0.047 (4.7)

Note: Person-hours for jobs which can only be performed during refueling outages (once every 24 months) are twice the annual person-hours shown in this table.

PRELIMINARY

Table 12.4-6

Occupational Dose Estimates During Inservice Inspection

Facility Area/Task/Activity	Estimated Average Dose Rate, (µSv/hr)	Estimated Annual Time (person-hours)	Projected Annual Collective Dose, person-Sv (man-rem)
Primary Containment			
General Activities	60	100	0.006 (0.60)
RPV Welds/Nozzles	60	100	0.006 (0.60)
Main Steam piping/valves	60	25	0.0015 (0.15)
Feedwater piping/valves	60	30	0.0018 (0.18)
RWCU/SDC piping/valves	60	12	0.0007 (0.07)
SLC piping/valves	60	12	0.0007 (0.07)
Other Equipment	60	50	0.0030 (0.30)
Reactor Building			
General Activities	30	300	0.0090 (0.90)
RWCU/SDC	30	75	0.0023 (0.23)
CRD	30	12	0.0004 (0.04)
Other Equipment (Passive Systems)	30	50	0.0015 (0.15)
Total		766	0.0329 (3.29)

Note: Person-hours for jobs which can only be performed during refueling outages (once every 24 months) are twice the annual person-hours shown in this table.

PRELIMINARY

Table 12.4-7

Occupational Dose Estimates During Special Maintenance

Facility Area/Task/Activity	Estimated Average Dose Rate, (µSv/hr)	Estimated Annual Time (person-hours)	Projected Annual Collective Dose, person-Sv (man-rem)
Primary Containment			
MSIV Rework	18	800	0.0144 (1.44)
SV and SRV Maint	60	100	0.0060 (0.60)
FMCRD Undervessel	65	204	0.0133 (1.33)
LPRM/AFIP	100	24	0.0024 (0.24)
Miscellaneous Valves	40	750	0.0300 (3.00)
Miscellaneous Instrumentation	50	500	0.025 (2.50)
Other Drywell Outage Maintenance Including Passive Systems	50	650	0.0325 (3.25)
Reactor Building			
MSIV Rework	13	1,300	0.0169 (1.69)
RWCU/SDC Pumps/Motors	150	200	0.03 (3.00)
CRD HCU	30	300	0.0090 (0.90)
FMCRD Rebuild	30	120	0.0036 (0.36)
Instrumentation	30	600	0.018 (1.80)
Other RB Outage Maintenance Including Passive Systems	8	3,400	0.0272 (2.72)
Turbine Building			
Major Turbine Overhaul	3	12000	0.036 (3.60)
Condensate Treatment	35	1000	0.0350 (3.50)
Turbine Valves/Pumps	39	910	0.0355 (3.55)
Total		22858	0.3348 (33.48)

Note: Person-hours for jobs which can only be performed during refueling outages (once every 24 months) are twice the annual person-hours shown in this table.

PRELIMINARY

12.5 OPERATIONAL RADIATION PROTECTION PROGRAM

12.5.1 Objectives

The ESBWR design includes health physics facilities and features to administratively control:

- Plant personnel activities limiting personnel exposure to radiation and radioactive materials ALARA, and within the guidelines of 10 CFR 20.
- Effluent releases to maintain the releases ALARA, and within the limits of 10 CFR 20 and the plant Technical Specifications.
- Waste shipments in the plant to meet applicable shipping and receipt of material requirements at the storage or burial site.

12.5.2 Equipment, Instrumentation, and Facilities

The health physics facilities are located in the SB. Access to the radiologically controlled areas of the RB, FB, TB, and RW is normally through the entry/exit area of the health physics facilities of the SB. Exit from the radiologically controlled areas is at the same location. A functional layout of the health physics facilities is provided in Figures 12.5-1 and 12.5-2.

The health physics area contains the personnel contamination monitoring equipment, decontamination shower facilities, changing rooms and first-aid equipment. The changing rooms are provided with lockers, wash sinks, showers and toilet facilities.

Portable radiation survey instrumentation is stored at the access control and health physics room and at in-plant control points. This instrumentation allows plant personnel to perform radiation, contamination and neutron surveys, as needed, as well as to collect samples for airborne analysis. Shielded rooms are provided in the health physics area for radioactivity analysis and for calibration of survey instruments.

The non-portable airborne radiation monitoring equipment is described in Subsection 12.3.4. The COL applicant will provide a description of plant health physics equipment, instrumentation, and facilities to the level of detail provided in Regulatory Guide 1.206 (Reference 12.5-1) (COL 12.5-1-A). The COL applicant will provide a description of the portable instruments that accurately measure radio-iodine concentrations in plant areas under accident conditions and training and procedures on the use of these instruments in compliance with 10 CFR Part 50.34 (f) (2) (xxvii) and NUREG-0737 Item III.D.3.3. (COL 12.5-2-A).

12.5.3 Operational Considerations

The COL applicant will provide a description of the operational radiation protection program to the level of detail provided in Regulatory Guide 1.206. The radiation protection program will consider special shielding features such as lead blankets, lead curtains, etc, and include a description of access controls to Very High Radiation Areas (see Subsections 12.3.1.3 and COL 12.5-3-A).

12.5.4 COL Information

12.5-1-A Equipment, Instrumentation, and Facilities

PRELIMINARY

The COL applicant will provide a description of plant health physics equipment, instrumentation, and facilities to the level of detail provided in Regulatory Guide 1.206 (Subsection 12.5.2).

12.5-2-A Compliance with 10 CFR Part 50.34 (f) (2) (xxvii) and NUREG-0737 Item III.D.3.3

The COL applicant will provide a description of the portable instruments that accurately measure radio-iodine concentrations in plant areas under accident conditions, and training and procedures on the use of these instruments (Subsection 12.5.2).

12.5-3-A Radiation Protection Program

The COL applicant will provide a description of the operational radiation protection program to the level of detail provided in Regulatory Guide 1.206. The radiation protection program will consider special shielding features such as lead blankets, lead curtains, etc, and include a description of access controls to Very High Radiation Areas (Subsections 12.3.1.3 and 12.5.3).

The COL Applicant will provide a milestone for full program implementation (Section 13.4).

12.5.5 References

12.5-1 USNRC, "Combined License Applications for Nuclear Power Plants (LWR Edition)," Regulatory Guide 1.206, June 2007.

PRELIMINARY

Figure 12.5-1. Functional Layout of Health Physics Facilities at Service Building - Elevation 1300 mm

PRELIMINARY

Figure 12.5-2. Functional Layout of Health Physics Facilities at Service Building - Elevation 4650 mm

PRELIMINARY

12.6 Deleted

12A. CALCULATION OF AIRBORNE RADIONUCLIDES

This appendix presents a simplified methodology used in calculating the airborne concentrations of radionuclides in a compartment. This methodology conservatively assumes that diffusion and mixing in a compartment is instantaneous with respect to those mitigating mechanisms, such as radioactive decay and other removal mechanisms. For each analyzed compartment, the following calculations are performed on an isotope-by-isotope basis to verify airborne concentrations are within the limits of 10 CFR 20.

- For the compartment, all sources of airborne radionuclides are identified:
  - Flow of contaminated air from other areas;
  - Gaseous releases from equipment in the compartment; and
  - Evolution of airborne sources from water leaking from equipment or sumps.
- Second, the primary sinks of airborne radionuclides are identified. This is primarily outflow from the compartment but may also take the form of condensation onto room coolers.
- Given the above input information, the following equation calculates a conservative concentration:

$$C_i = \frac{1}{V}\sum_j \frac{S_{ij}}{\left(\lambda_i + \sum_k R_{ijk}\right)}$$

Where:

C_i = concentration of the $_i$th radionuclide in the room

V = volume of room

S_{ij} = the $_j$th source (rate) of the $_i$th radionuclide to the room (these sources are discussed below)

R_{ijk} = the $_k$th removal constant for the $_j$th source and the $_i$th radionuclide as discussed below

λ_i = radionuclide decay constant

12A.1 EVALUATION PARAMETERS

The following parameters require evaluation on a case-by-case basis dictated by the physical parameters and processes germane to the modeling process.

S_{ij} is defined as the source rate for radionuclide i into the compartment. Typically, these source rates take the form of:

PRELIMINARY

- Inflow of contaminated air from an upstream compartment. Given the concentration of radionuclide i, C_i, in this air and a flow rate of "r", the source rate then becomes $S_{ij} = r\ C_i$.
- Production of airborne radionuclides from equipment. This typically takes two forms: gaseous leakage and liquid leakage.

For gaseous leakage sources, the source rate is equal to the concentration of radionuclide i, C_i, and the leakage rate, 'r', or $S_{ij} = r\ C_i$.

For liquid sources, the source rate is similar but more complex. Given a liquid concentration C_i and a leakage rate, 'r', the total release from the leak is $r\ C_i$. The fraction of this release that becomes airborne is typically evaluated by a partition factor, P_f that may be conservatively estimated from:

Noble Gases

$P_f = 1$

All others

$$P_f = \frac{h_t - h_f}{h_s - h_f}$$

Where:

h_t = saturated liquid enthalpy

h_f = saturated liquid enthalpy at one atmosphere = 180.17 Btu/lb

h_s = saturated vapor enthalpy at one atmosphere = 1150.5 Btu/lb

Therefore, the liquid release rate becomes $r\ C_i\ P_f$.

R_{ijk} is defined as the removal rate constant and typically consists of:

- Exhaust rate from the compartment. This term considers not only the exhaust of any initially contaminated air but also any clean air that may be used to dilute the compartment air.
- In compartment filter systems. Such filter systems are treated by the equation:

  $R_{ijk} = (1-F_i) \cdot r_i$

  Where:

  r_i = filter system flow rate

  F_i = filter efficiency for radionuclide i
- Other removal factors on a case-by-case basis that may be deemed reasonable and conservative.

PRELIMINARY

12A.2 EXAMPLE CALCULATION

Values used below are examples only and should not be used in any actual evaluation. This example looks at I-131 in a compartment of 283 $m^3 = V$. First, all primary sources of radionuclides need to be identified and categorized.

Flow into the compartment equals 424 m^3 per hour with the input I-131 concentration equal to 7.4×10^{-6} Bq/ml (from upstream compartments) or 0.90 Bq/sec. No other sources of contaminated air or clean air are assumed.

The compartment contains a pump carrying reactor coolant with a maximum specified leakage rate of 5.7×10^{-7} m^3 per minute at 288°C.

- Based upon these conditions and steam table properties, it is conservatively estimated that 44% of the liquid flashes to steam and becomes airborne. It is important to note that 44% flashing at 288°C is extremely conservative. See Reference 12A-1 for a discussion of fission product transport. In addition to the flashing liquid, it is assumed that a proportional amount of I-131 becomes airborne; therefore, $P_f = 0.44$.
- Assuming an iodine concentration in reactor water of 5.3×10^{-4} MBq/gm of I-131, the calculated source of I-131 to the air that the pump provides is 1.6×10^{-6} MBq/sec. Based upon standard tables for water at 288°C, water density is assumed to be 0.743 gm/cm^3.

Second, the sinks for airborne material need to be identified, which in this example include only exhaust that is categorized as flow out of the compartment at 150% per hour or 4.2×10^{-4} per second.

Therefore, for an equilibrium situation, the I-131 airborne concentration from this liquid source would be calculated from the equation:

$$A=1/V(S_1 / (\lambda + R_1) + S_2 / (\lambda + R_2))$$

Where:

V	=	volume of compartment = 283 m^3
S_1	=	source rate in Bq per second = 1.6 Bq/sec from liquid
S_2	=	source rate from inflow = 0.9 Bq/sec
λ	=	isotopic decay constant in units of per second = 9.977×10^{-7}/sec
$R_1 = R_2$	=	removal rate constant per second (exfiltration) = 4.2×10^{-4} per second
A =		2.117×10^{-11} MBq/ml of I-131

12A.3 COL INFORMATION

None.

12A.4 REFERENCES

12A-1 Paquette, et al, "Volatility of Fission Products During Reactor Accidents," Journal of Nuclear Materials, Vol. 130 Pg. 129-138, 1985.

12B. CALCULATION OF AIRBORNE RELEASES

The following provides the basis for the Table 12.2-16 calculated values.

12B.1 REACTOR BUILDING RELEASES

Noble gases and particulates are calculated by taking the sum of the Containment Building and Auxiliary Building values from NUREG-0016 Table 2-12 and multiplying them by the appropriate adjustment factors. These are calculated by the formulas:

$$\begin{aligned} Noble\ Gases &= \frac{Power}{3400} \times \frac{Availability}{0.80} \times \frac{Env\,\mathrm{Rel}}{50000} = 0.609 \\ Particulates &= \frac{Power}{3400} \times \frac{Availability}{0.80} \times \frac{Env\,\mathrm{Rel}}{0.0037} = 0.646 \end{aligned} \qquad (12B\text{-}1)$$

The adjustment factors are based upon the ratio of plant power (4500 MWth) to 3400 MWth for the NUREG-0016 standard plant; availability (0.92 for ESBWR); ratio of gases released at 20,000 µCi/s for ESBWR compared to 50,000 µCi/s for the NUREG-0016 standard plant; and I-131 reactor water concentrations of 0.00157 µCi/g for ESBWR compared to 0.0037 µCi/g for the NUREG-0016 standard plant.

The iodine release values are calculated by starting with the normal operation iodine water source term in Table 11.1-4b. Table 1-2 of NUREG-0016 provides the annual normalized iodine release rate for the Containment Building and Auxiliary Building for both power operation and for outages. Since the ESBWR does not have an Auxiliary Building, this value is added to the Containment Building value to determine the Reactor Building releases. The normal operation releases in Table 1-2 of NUREG-0016 are based on the NUREG-0016 80% availability. These releases are adjusted to the 92% ESBWR availability, and then multiplied by the Table 11.1-4b iodine water source term values. Similarly, the outage releases in Table 1-2 of NUREG-0016 are adjusted by the 8% ESBWR outage fraction and multiplied by the DCD iodine source term values.

Tritium is calculated in accordance with Paragraph 2.2.15.1 of NUREG-0016.

12B.2 TURBINE BUILDING RELEASES

Noble gases and particulates are calculated by taking the Turbine Building values from NUREG-0016 Table 2-12, and multiplying them by the adjustment factors described in equation (12B-1) above.

The methodology for determining the iodine releases is the same as described above for the Reactor Building, with two exceptions:

- The Turbine Building values from Table 1-2 of NUREG-0016 are used for normalized releases.
- The iodine moisture carryover fraction (2%) is applied to the total, in accordance with Section 2.2.4.2 of NUREG-0016.

Tritium is calculated in accordance with Paragraph 2.2.15.1 of NUREG-0016.

12B.3 RADWASTE BUILDING RELEASES

Noble gases and particulates are calculated by taking the Radwaste Building values from NUREG-0016 Table 2-12, and multiplying them by the adjustment factors described in equation (12B-1) above.

The methodology for determining the iodine releases is the same as described above for the Reactor Building, with the only difference being that the Radwaste Building values from Table 1-2 of NUREG-0016 are used for normalized releases.

12B.4 MECHANICAL VACUUM PUMP RELEASES

The Xe-133 and Xe-135 values are calculated by taking the values from NUREG-0016 Section 2.2.7.1, and multiplying by the adjustment factors described in equation (12B-1) above. The I-131 value is calculated by taking the value from NUREG-0016 Section 2.2.7.1, and multiplying it by the iodine carryover (2.0%) and by the I-131 normal operation water concentration from Table 11.1-4b.

12B.5 TURBINE SEAL RELEASES

The turbine gland seal annual airborne release values are generated by applying the annual radioiodine releases from the gland seal condenser exhaust (0.81 Ci/yr per µCi/g of I-131 in the reactor coolant, and 0.22 Ci/yr per µCi/g of I-133 in the reactor coolant, per Section 2.2.6.1 of NUREG-0016) to the normal iodine coolant concentrations for those two isotopes (Table 11.1-4b).

12B.6 OFFGAS SYSTEM RELEASES

The holdup times for the offgas system are based on the parameters specified in Table 12.2-15. The normal operation source term for the noble gases entering the offgas system are provided in Table 11.1-2b. The normal operation source term for Ar-41 entering the offgas system (40 µCi/sec) is provided in Section 2.2.23 of NUREG-0016. The offgas system release values in Table 12.2-16 are determined by applying the offgas bed calculated holdup times to the normal operation source terms.

For C-14, guidance is provided for releases from the offgas system in Section 2.2.22.2 of NUREG-0016. Two values in the equation provided in Section 2.2.22.2 of NUREG-0016 are modified or confirmed for ESBWR:

m (mass of water in the core) = 39,000 kg
p (plant capacity factor) = 0.92

Since the calculation of C-14 generation in NUREG-0016 is based upon an activation calculation in the core, the parameter m in the NUREG-0016 Section 2.2.22.2 equation is interpreted to be the mass of water in the core region (from top of active fuel to bottom of active fuel) at rated power. The ESBWR mass of water at rated power in the core region is 3.9E+04 kg. The C-14 source term is also adjusted by the ratio of 4500MWth/3400 MWth to account for the difference between the ESBWR and generic plant thermal power levels.

PRELIMINARY

12B.7 DRYWELL RELEASES

The drywell releases are based upon the standard NUREG-0016 assumptions of 2.5 gpm steam and water leaks, and 24 purges per year, with 365 hours between each purge.

The iodine and other equivalent water release is:

$$\mathrm{Re}\,l = (L_S C + L_W FF) * 63.09 \qquad \text{(12B-2)}$$

Where:

Rel is the equivalent water release (grams/sec),
L_S and L_W are the leakage rate for steam and water respectively (2.5 gpm each),
C is the steam carryover fraction (2% for iodines, 0.1% for other nuclides),
FF is the flash fraction for water (0.4), and
63.09 is equal to 3785.412 grams/gallon divided by 60 seconds per minute.

The flashing fraction of 0.4 is determined by the following formula:

$$FF = \frac{h_t - h_f}{h_s - h_f} \qquad \text{(12B-3)}$$

Where:

h_t = enthalpy of saturated water at 1050 psia (550.1 Btu/lb),
h_f = enthalpy of saturated water at 14.7 psia (180.2 Btu/lb), and
h_s = enthalpy of saturated steam at 14.7 psia (1150.5Btu/lb).

The resulting value for iodines is 66.24 grams/sec and other nuclides is 63.25 grams/sec. For tritium, the steam carryover is set to 1.0.

For noble gases, the release is:

Noble Gas Environmental Release (20,000 µCi/s) * 63.09 * L_W (2.5 gpm) divided by the steam flow rate of 8760 metric tons/hr (per Table 11.1-3). The resulting equivalent release is 1.30 µCi/sec.

The following equation is used for noble gas releases:

$$\mathrm{R_i} = \mathrm{N_p R_T} \frac{\mathrm{A_i}}{\mathrm{A_T}} \frac{(1 - \mathrm{e}^{-\lambda_i t})}{\lambda_i} \qquad \text{(12B-4)}$$

Where:

R_i = annual release rate for isotope *i*, in Ci/yr,
N_p = number of purges per year (24 as described above),
R_T = noble gas release rate (1.30 µCi/sec),
A_i / A_T = ratio of design basis steam activity of isotope *i* to total design basis noble gas steam activity,
λ_i = decay constant, and
t = number of seconds in year divided by N_p.

The ratio A_i / A_T is defined as the ratio of design basis steam activity of isotope *i* to total design basis noble gas steam activity. The value A_i is calculated by taking the design basis noble gas

steam concentration of isotope i from Table 11.1-2a (in units of μCi/g), multiplying it by the steam flow rate from Table 11.1-3 (8.76E+06 kg/hr), and applying unit conversions to yield A_i in units of μCi/sec. The value A_T is the summation of the individual A_i calculated values.

The equation for iodines is similar:

$$R_i = N_p \cdot \mathrm{Rel}I \cdot EnvI_i \cdot (1-0.95) \cdot (1-0.9) \cdot \frac{1-e^{-\lambda_i t}}{\lambda_i} \qquad \text{(12B-5)}$$

Where:

RelI = iodine water release rate (66.24 grams/sec) described in equation (12B-2),
$EnvI_i$ = the environmental iodine water concentration for isotope i (μCi/gram),
0.95 = carbon filter efficiency for drywell purging, and
0.9 = condensation removal factor of 90%.

The condensation removal factor is based on the steam condensation and plateout in the drywell, due to the operation of the drywell coolers and the temperature differential between the steam and drywell atmosphere and surfaces.

Figure 9.4-10 shows that the RB CONAVS takes the flow from the Containment Purge Fan through the RB HVAC Online Purge Exhaust Filter Unit and out the building. Table 9.4-11 shows that the Online Purge Exhaust Filter Unit consists of a 99% efficient HEPA and a 95% efficient carbon filter.

The equation for other nuclides is:

$$R_i = N_p \cdot \mathrm{Rel}O \cdot EnvO_i \cdot (1-0.99) \cdot (1-0.9) \cdot \frac{(1-e^{-\lambda_i t})}{\lambda_i} \qquad \text{(12B-6)}$$

Where:

RelO = other nuclide water release rate (63.25 grams/sec) described in equation (12B-2),
$EnvO_i$ = the environmental other nuclide water concentration for isotope i (μCi/gram),
0.99 = HEPA Filter efficiency for drywell purging.

PRELIMINARY