ArevaEPRDCPEm Resource

From: WELLS Russell D (AREVA NP INC) [Russell.Wells@areva.com]
Sent: Tuesday, June 30, 2009 8:34 PM
To: Tesfaye, Getachew; Miernicki, Michael
Cc: Pederson Ronda M (AREVA NP INC); BENNETT Kathy A (OFR) (AREVA NP INC); DELANO Karen V (AREVA NP INC)
Subject: Response to U.S. EPR Design Certification Application RAI No. 155, FSAR Ch 3, Supplement 4
Attachments: RAI 155 Supplement 4 Response US EPR DC.pdf

Getachew,

AREVA NP Inc. (AREVA NP) provided responses to 5 of the 78 questions of RAI No. 155 on February 13, 2009. AREVA NP submitted Supplement 1 to the response on March 31, 2009 to address 20 of the remaining 73 questions. AREVA NP submitted Supplement 2 to the response on April 30, 2009, to address 9 of the remaining 53 questions. AREVA NP submitted Supplement 3 to the response on May 29, 2009, to address 20 of the remaining 44 questions. The attached file, "RAI 155 Supplement 4 Response US EPR DC.pdf" provides technically correct and complete responses to 8 of the remaining 24 questions, as committed.

Appended to this file are affected pages of the U.S. EPR Final Safety Analysis Report in redline-strikeout format which support the response to RAI 155 Questions 03.08.05-14 and 03.08.02-1.

The following table indicates the respective pages in the response document, "RAI 155 Supplement 4 Response US EPR DC.pdf," that contain AREVA NP's response to the subject questions.

Question #	Start Page	End Page
RAI 155 — 03.08.01-11	2	2
RAI 155 — 03.08.02-1	3	3
RAI 155 — 03.08.02-4	4	4
RAI 155 — 03.08.05-7	5	8
RAI 155 — 03.08.05-13	9	10
RAI 155 — 03.08.05-14	11	13
RAI 155 — 03.08.05-15	14	14
RAI 155 — 03.08.05-16	15	15
RAI 155 — 03.08.05-18	16	16

The schedule for technically correct and complete responses to the remaining 16 questions is unchanged, with the exception of question 03.08.05-18, and is provided below. The schedule for the response to question 03.08.05-18 has been changed to July 31, 2009.

Question RAI 155 #	Response Date
RAI 155 — 03.08.01-03	October 30, 2009
RAI 155 — 03.08.01-06	October 30, 2009
RAI 155 — 03.08.01-20	October 30, 2009
RAI 155 — 03.08.01-24	October 30, 2009
RAI 155 — 03.08.02-02	July 31, 2009
RAI 155 — 03.08.02-07	July 31, 2009
RAI 155 — 03.08.02-08	July 31, 2009
RAI 155 — 03.08.03-04	July 31, 2009
RAI 155 — 03.08.03-16	July 31, 2009

RAI 155 — 03.08.03-17	July 31, 2009
RAI 155 — 03.08.04-06	October 30, 2009
RAI 155 — 03.08.05-01	July 31, 2009
RAI 155 — 03.08.05-08	July 31, 2009
RAI 155 — 03.08.05-10	July 31, 2009
RAI 155 — 03.08.05-12	July 31, 2009
RAI 155 — 03.08.05-18	July 31, 2009

Sincerely,

(Russ Wells on behalf of)

Ronda Pederson
ronda.pederson@areva.com
Licensing Manager, U.S. EPR Design Certification
New Plants Deployment
AREVA NP, Inc.
An AREVA and Siemens company
3315 Old Forest Road
Lynchburg, VA 24506-0935
Phone: 434-832-3694
Cell: 434-841-8788

From: Pederson Ronda M (AREVA NP INC)
Sent: Friday, May 29, 2009 9:49 PM
To: Getachew Tesfaye
Cc: BENNETT Kathy A (OFR) (AREVA NP INC); DELANO Karen V (AREVA NP INC); VAN NOY Mark (EXT)
Subject: Response to U.S. EPR Design Certification Application RAI No. 155, Supplement 3

Getachew,

AREVA NP Inc. (AREVA NP) provided responses to 5 of the 78 questions of RAI No. 155 on February 13, 2009. AREVA NP submitted Supplement 1 to the response on March 31, 2009, to address 20 of the remaining questions. AREVA NP submitted Supplement 2 to the response on April 30, 2009, to address 9 of the remaining questions. The attached file, "RAI 155 Supplement 3 Response US EPR DC.pdf" provides technically correct and complete responses to 20 of the remaining 44 questions, as committed.

Appended to this file are affected pages of the U.S. EPR Final Safety Analysis Report in redline-strikeout format which support the response to RAI 155 Questions 03.08.01-8, 03.08.01-10, 03.08.01-12, 03.08.03-3, 03.08.03-6, 03.08.03-10, 03.08.04-3, and 03.08.05-6.

The following table indicates the respective pages in the response document, "RAI 155 Supplement 3 Response US EPR DC.pdf" that contain AREVA NP's response to the subject questions.

Question #	Start Page	End Page
RAI 155 — 03.08.01-8	2	9
RAI 155 — 03.08.01-9	10	10
RAI 155 — 03.08.01-10	11	17
RAI 155 — 03.08.01-12	18	19
RAI 155 — 03.08.01-16	20	21
RAI 155 — 03.08.01-22	22	24

RAI 155 — 03.08.01-27	25	26
RAI 155 — 03.08.02-5	27	27
RAI 155 — 03.08.02-6	28	31
RAI 155 — 03.08.02-10	32	32
RAI 155 — 03.08.03-3	33	35
RAI 155 — 03.08.03-6	36	37
RAI 155 — 03.08.03-10	38	38
RAI 155 — 03.08.03-11	39	40
RAI 155 — 03.08.03-12	41	41
RAI 155 — 03.08.04-3	42	45
RAI 155 — 03.08.04-4	46	47
RAI 155 — 03.08.04-5	48	48
RAI 155 — 03.08.05-2	49	50
RAI 155 — 03.08.05-6	51	52

The schedule for technically correct and complete responses to the remaining 24 questions is unchanged and provided below:

Question RAI 155 #	**Response Date**
RAI 155 — 03.08.01-03	October 30, 2009
RAI 155 — 03.08.01-06	October 30, 2009
RAI 155 — 03.08.01-11	June 30, 2009
RAI 155 — 03.08.01-20	October 30, 2009
RAI 155 — 03.08.01-24	October 30, 2009
RAI 155 — 03.08.02-01	June 30, 2009
RAI 155 — 03.08.02-02	July 31, 2009
RAI 155 — 03.08.02-04	June 30, 2009
RAI 155 — 03.08.02-07	July 31, 2009
RAI 155 — 03.08.02-08	July 31, 2009
RAI 155 — 03.08.03-04	July 31, 2009
RAI 155 — 03.08.03-16	July 31, 2009
RAI 155 — 03.08.03-17	July 31, 2009
RAI 155 — 03.08.04-06	October 30, 2009
RAI 155 — 03.08.05-01	July 31, 2009
RAI 155 — 03.08.05-07	June 30, 2009
RAI 155 — 03.08.05-08	July 31, 2009
RAI 155 — 03.08.05-10	July 31, 2009
RAI 155 — 03.08.05-12	July 31, 2009
RAI 155 — 03.08.05-13	June 30, 2009
RAI 155 — 03.08.05-14	June 30, 2009
RAI 155 — 03.08.05-15	June 30, 2009
RAI 155 — 03.08.05-16	June 30, 2009
RAI 155 — 03.08.05-18	June 30, 2009

Sincerely,

Ronda Pederson
ronda.pederson@areva.com
Licensing Manager, U.S. EPR Design Certification
AREVA NP Inc.
An AREVA and Siemens company
3315 Old Forest Road
Lynchburg, VA 24506-0935
Phone: 434-832-3694
Cell: 434-841-8788

From: Pederson Ronda M (AREVA NP INC)
Sent: Thursday, April 30, 2009 9:16 PM
To: Getachew Tesfaye (gxt2@nrc.gov)
Cc: BENNETT Kathy A (OFR) (AREVA NP INC); DELANO Karen V (AREVA NP INC); VAN NOY Mark (EXT)
Subject: Response to U.S. EPR Design Certification Application RAI No. 155, Supplement 2 (part 4 of 4)

Getachew,

Response file, "RAI 155 Supplement 2 Response US EPR DC (Part 4 of 4).pdf" is attached.

Sincerely,

Ronda Pederson
ronda.pederson@areva.com
Licensing Manager, U.S. EPR Design Certification
AREVA NP Inc.
An AREVA and Siemens company
3315 Old Forest Road
Lynchburg, VA 24506-0935
Phone: 434-832-3694
Cell: 434-841-8788

From: Pederson Ronda M (AREVA NP INC)
Sent: Thursday, April 30, 2009 9:12 PM
To: Getachew Tesfaye (gxt2@nrc.gov)
Cc: BENNETT Kathy A (OFR) (AREVA NP INC); DELANO Karen V (AREVA NP INC); VAN NOY Mark (EXT)
Subject: Response to U.S. EPR Design Certification Application RAI No. 155, Supplement 2 (part 3 of 4)

Getachew,

Response file, "RAI 155 Supplement 2 Response US EPR DC (Part 3 of 4).pdf" is attached.

Sincerely,

Ronda Pederson
ronda.pederson@areva.com
Licensing Manager, U.S. EPR Design Certification
AREVA NP Inc.
An AREVA and Siemens company
3315 Old Forest Road
Lynchburg, VA 24506-0935
Phone: 434-832-3694
Cell: 434-841-8788

From: Pederson Ronda M (AREVA NP INC)
Sent: Thursday, April 30, 2009 9:11 PM
To: Getachew Tesfaye (gxt2@nrc.gov)
Cc: BENNETT Kathy A (OFR) (AREVA NP INC); DELANO Karen V (AREVA NP INC); VAN NOY Mark (EXT)
Subject: Response to U.S. EPR Design Certification Application RAI No. 155, Supplement 2 (part 2 of 4)

Getachew,

Response file, "RAI 155 Supplement 2 Response US EPR DC (Part 2 of 4).pdf" is attached.

Sincerely,

Ronda Pederson
ronda.pederson@areva.com
Licensing Manager, U.S. EPR Design Certification
AREVA NP Inc.
An AREVA and Siemens company
3315 Old Forest Road
Lynchburg, VA 24506-0935
Phone: 434-832-3694
Cell: 434-841-8788

From: Pederson Ronda M (AREVA NP INC)
Sent: Thursday, April 30, 2009 9:09 PM
To: Getachew Tesfaye (gxt2@nrc.gov)
Cc: BENNETT Kathy A (OFR) (AREVA NP INC); DELANO Karen V (AREVA NP INC); VAN NOY Mark (EXT)
Subject: Response to U.S. EPR Design Certification Application RAI No. 155, Supplement 2 (part 1 of 4)

Getachew,

AREVA NP Inc. (AREVA NP) provided responses to 5 of the 78 questions of RAI No. 155 on February 13, 2009. AREVA NP submitted Supplement 1 to the response on March 31, 2009 to address 20 of the remaining questions. The response document, "RAI 155 Supplement 2 Response U.S. EPR DC" provides technically correct and complete responses to 9 of the remaining 53 questions, as committed.

Due to transmittal size limitations, the response file has been separated to e-mail the response in four parts. Attached is "RAI 155 Supplement 2 Response U.S. EPR DC (Part 1 of 4).pdf."

Appended to this file are affected pages of the U.S. EPR Final Safety Analysis Report in redline-strikeout format which support the response to RAI 155 Questions 03.08.01-07, 03.08.02-03, 03.08.03-05, 03.08.03-14 and 03.08.03-15.

The following table indicates the respective pages in the response document, "RAI 155 Supplement 2 Response U.S. EPR DC," that contain AREVA NP's response to the subject questions.

Question #	Start Page	End Page
RAI 155 — 03.08.01-07	2	5
RAI 155 — 03.08.01-17	6	6
RAI 155 — 03.08.02-03	7	7
RAI 155 — 03.08.03-05	8	15
RAI 155 — 03.08.03-14	16	16
RAI 155 — 03.08.03-15	17	37
RAI 155 — 03.08.04-02	38	38
RAI 155 — 03.08.05-05	39	42
RAI 155 — 03.08.05-11	43	43
RAI 155 — 03.08.05-12	44	44

AREVA NP's response to RAI 155 Question 03.08.05-12 has been deferred to July 31, 2009 to be provided concurrently with the response to a similar question regarding the Nuclear Island common structure. With this exception, the schedule for technically correct and complete responses to the remaining 44 questions is unchanged and is provided below:

Question RAI 155 #	Response Date
RAI 155 — 03.08.01-03	October 30, 2009
RAI 155 — 03.08.01-06	October 30, 2009
RAI 155 — 03.08.01-08	May 29, 2009
RAI 155 — 03.08.01-09	May 29, 2009
RAI 155 — 03.08.01-10	May 29, 2009
RAI 155 — 03.08.01-11	June 30, 2009
RAI 155 — 03.08.01-12	May 29, 2009
RAI 155 — 03.08.01-16	May 29, 2009
RAI 155 — 03.08.01-20	October 30, 2009
RAI 155 — 03.08.01-22	May 29, 2009
RAI 155 — 03.08.01-24	October 30, 2009
RAI 155 — 03.08.01-27	May 29, 2009
RAI 155 — 03.08.02-01	June 30, 2009
RAI 155 — 03.08.02-02	July 31, 2009
RAI 155 — 03.08.02-04	June 30, 2009
RAI 155 — 03.08.02-05	May 29, 2009
RAI 155 — 03.08.02-06	May 29, 2009
RAI 155 — 03.08.02-07	July 31, 2009
RAI 155 — 03.08.02-08	July 31, 2009
RAI 155 — 03.08.02-10	May 29, 2009
RAI 155 — 03.08.03-03	May 29, 2009
RAI 155 — 03.08.03-04	July 31, 2009
RAI 155 — 03.08.03-06	May 29, 2009
RAI 155 — 03.08.03-10	May 29, 2009

RAI 155 — 03.08.03-11	May 29, 2009
RAI 155 — 03.08.03-12	May 29, 2009
RAI 155 — 03.08.03-16	July 31, 2009
RAI 155 — 03.08.03-17	July 31, 2009
RAI 155 — 03.08.04-03	May 29, 2009
RAI 155 — 03.08.04-04	May 29, 2009
RAI 155 — 03.08.04-05	May 29, 2009
RAI 155 — 03.08.04-06	October 30, 2009
RAI 155 — 03.08.05-01	July 31, 2009
RAI 155 — 03.08.05-02	May 29, 2009
RAI 155 — 03.08.05-06	May 29, 2009
RAI 155 — 03.08.05-07	June 30, 2009
RAI 155 — 03.08.05-08	July 31, 2009
RAI 155 — 03.08.05-10	July 31, 2009
RAI 155 — 03.08.05-12	July 31, 2009
RAI 155 — 03.08.05-13	June 30, 2009
RAI 155 — 03.08.05-14	June 30, 2009
RAI 155 — 03.08.05-15	June 30, 2009
RAI 155 — 03.08.05-16	June 30, 2009
RAI 155 — 03.08.05-18	June 30, 2009

Sincerely,

Ronda Pederson
ronda.pederson@areva.com
Licensing Manager, U.S. EPR Design Certification
AREVA NP Inc.
An AREVA and Siemens company
3315 Old Forest Road
Lynchburg, VA 24506-0935
Phone: 434-832-3694
Cell: 434-841-8788

From: Pederson Ronda M (AREVA NP INC)
Sent: Tuesday, March 31, 2009 8:16 PM
To: Getachew Tesfaye
Cc: BENNETT Kathy A (OFR) (AREVA NP INC); DELANO Karen V (AREVA NP INC); VAN NOY Mark (EXT); HEDRICK Gary E (AFS)
Subject: Response to U.S. EPR Design Certification Application RAI No. 155, Supplement 1

Getachew,

AREVA NP Inc. (AREVA NP) provided responses to 5 of the 78 questions of RAI No. 155 on February 13, 2009. The attached file, "RAI 155 Supplement 1 Response U.S. EPR DC" provides technically correct and complete responses to 20 of the remaining 73 questions, as committed.

Appended to this file are affected pages of the U.S. EPR Final Safety Analysis Report in redline-strikeout format which support the response to RAI 155 Supplement 1 Questions 03.08.01-04, 03.08.01-05, 03.08.01-21, 03.08.02-09, 03.08.03-02, 03.08.03-09, 03.08.05-03, and 03.08.05-04.

The following table indicates the respective page(s) in the response document, "RAI 155 Supplement 1 Response U.S. EPR DC," that contain AREVA NP's response to the subject questions.

Question #	**Start Page**	**End Page**
RAI 155 — 03.08.01-01	2	2
RAI 155 — 03.08.01-02	3	9
RAI 155 — 03.08.01-04	10	12
RAI 155 — 03.08.01-05	13	16
RAI 155 — 03.08.01-13	17	19
RAI 155 — 03.08.01-21	20	20
RAI 155 — 03.08.01-23	21	21
RAI 155 — 03.08.01-25	22	22
RAI 155 — 03.08.02-09	23	23
RAI 155 — 03.08.03-01	24	31
RAI 155 — 03.08.03-02	32	33
RAI 155 — 03.08.03-07	34	34
RAI 155 — 03.08.03-08	35	36
RAI 155 — 03.08.03-09	37	37
RAI 155 — 03.08.03-13	38	38
RAI 155 — 03.08.04-01	39	40
RAI 155 — 03.08.05-03	41	41
RAI 155 — 03.08.05-04	42	46
RAI 155 — 03.08.05-09	47	48
RAI 155 — 03.08.05-17	49	53

The schedule for technically correct and complete responses to the remaining 53 questions is unchanged and provided below:

Question RAI 155 #	**Response Date**
RAI 155 — 03.08.01-03	October 30, 2009
RAI 155 — 03.08.01-06	October 30, 2009
RAI 155 — 03.08.01-07	April 30, 2009
RAI 155 — 03.08.01-08	May 29, 2009
RAI 155 — 03.08.01-09	May 29, 2009
RAI 155 — 03.08.01-10	May 29, 2009
RAI 155 — 03.08.01-11	June 30, 2009
RAI 155 — 03.08.01-12	May 29, 2009
RAI 155 — 03.08.01-16	May 29, 2009
RAI 155 — 03.08.01-17	April 30, 2009
RAI 155 — 03.08.01-20	October 30, 2009
RAI 155 — 03.08.01-22	May 29, 2009

RAI 155 — 03.08.01-24	October 30, 2009
RAI 155 — 03.08.01-27	May 29, 2009
RAI 155 — 03.08.02-01	June 30, 2009
RAI 155 — 03.08.02-02	July 31, 2009
RAI 155 — 03.08.02-03	April 30, 2009
RAI 155 — 03.08.02-04	June 30, 2009
RAI 155 — 03.08.02-05	May 29, 2009
RAI 155 — 03.08.02-06	May 29, 2009
RAI 155 — 03.08.02-07	July 31, 2009
RAI 155 — 03.08.02-08	July 31, 2009
RAI 155 — 03.08.02-10	May 29, 2009
RAI 155 — 03.08.03-03	May 29, 2009
RAI 155 — 03.08.03-04	July 31, 2009
RAI 155 — 03.08.03-05	April 30, 2009
RAI 155 — 03.08.03-06	May 29, 2009
RAI 155 — 03.08.03-10	May 29, 2009
RAI 155 — 03.08.03-11	May 29, 2009
RAI 155 — 03.08.03-12	May 29, 2009
RAI 155 — 03.08.03-14	April 30, 2009
RAI 155 — 03.08.03-15	April 30, 2009
RAI 155 — 03.08.03-16	July 31, 2009
RAI 155 — 03.08.03-17	July 31, 2009
RAI 155 — 03.08.04-02	April 30, 2009
RAI 155 — 03.08.04-03	May 29, 2009
RAI 155 — 03.08.04-04	May 29, 2009
RAI 155 — 03.08.04-05	May 29, 2009
RAI 155 — 03.08.04-06	October 30, 2009
RAI 155 — 03.08.05-01	July 31, 2009
RAI 155 — 03.08.05-02	May 29, 2009
RAI 155 — 03.08.05-05	April 30, 2009
RAI 155 — 03.08.05-06	May 29, 2009
RAI 155 — 03.08.05-07	June 30, 2009
RAI 155 — 03.08.05-08	July 31, 2009
RAI 155 — 03.08.05-10	July 31, 2009
RAI 155 — 03.08.05-11	April 30, 2009
RAI 155 — 03.08.05-12	April 30, 2009
RAI 155 — 03.08.05-13	June 30, 2009
RAI 155 — 03.08.05-14	June 30, 2009
RAI 155 — 03.08.05-15	June 30, 2009
RAI 155 — 03.08.05-16	June 30, 2009
RAI 155 — 03.08.05-18	June 30, 2009

Sincerely,

Ronda Pederson
ronda.pederson@areva.com
Licensing Manager, U.S. EPR Design Certification
AREVA NP Inc.
An AREVA and Siemens company
3315 Old Forest Road
Lynchburg, VA 24506-0935
Phone: 434-832-3694
Cell: 434-841-8788

From: Pederson Ronda M (AREVA NP INC)
Sent: Friday, February 13, 2009 7:18 PM
To: 'Getachew Tesfaye'
Cc: BENNETT Kathy A (OFR) (AREVA NP INC); DELANO Karen V (AREVA NP INC); VAN NOY Mark (EXT); HARRIS Carolyn A (AREVA NP INC)
Subject: Response to U.S. EPR Design Certification Application RAI No. 155, FSAR Ch. 3

Getachew,
Attached please find AREVA NP Inc.'s (AREVA NP) response to the subject request for additional information (RAI). The attached file, "RAI 155 Response US EPR DC.pdf" provides technically correct and complete responses to 5 of the 78 questions.

Appended to this file are affected pages of the U.S. EPR Final Safety Analysis Report in redline-strikeout format which support the responses to RAI 155 Questions 03.08.01-15, 03.08.01-18, 03.08.01-19, and 03.08.01-26.

The following table indicates the respective pages in the response document, "RAI 155 Response US EPR DC.pdf," that contain AREVA NP's response to the subject questions.

Question #	Start Page	End Page
RAI 155 — 03.08.01-01	2	2
RAI 155 — 03.08.01-02	3	3
RAI 155 — 03.08.01-03	4	4
RAI 155 — 03.08.01-04	5	5
RAI 155 — 03.08.01-05	6	6
RAI 155 — 03.08.01-06	7	7
RAI 155 — 03.08.01-07	8	8
RAI 155 — 03.08.01-08	9	9
RAI 155 — 03.08.01-09	10	10
RAI 155 — 03.08.01-10	11	11
RAI 155 — 03.08.01-11	12	12
RAI 155 — 03.08.01-12	13	13
RAI 155 — 03.08.01-13	14	14
RAI 155 — 03.08.01-14	15	17
RAI 155 — 03.08.01-15	18	19
RAI 155 — 03.08.01-16	20	20
RAI 155 — 03.08.01-17	21	21
RAI 155 — 03.08.01-18	22	22

RAI 155 — 03.08.01-19	23	24
RAI 155 — 03.08.01-20	25	25
RAI 155 — 03.08.01-21	26	26
RAI 155 — 03.08.01-22	27	27
RAI 155 — 03.08.01-23	28	28
RAI 155 — 03.08.01-24	29	30
RAI 155 — 03.08.01-25	31	31
RAI 155 — 03.08.01-26	32	34
RAI 155 — 03.08.01-27	35	35
RAI 155 — 03.08.02-01	36	36
RAI 155 — 03.08.02-02	37	37
RAI 155 — 03.08.02-03	38	38
RAI 155 — 03.08.02-04	39	39
RAI 155 — 03.08.02-05	40	40
RAI 155 — 03.08.02-06	41	41
RAI 155 — 03.08.02-07	42	42
RAI 155 — 03.08.02-08	43	43
RAI 155 — 03.08.02-09	44	44
RAI 155 — 03.08.02-10	45	45
RAI 155 — 03.08.03-01	46	46
RAI 155 — 03.08.03-02	47	47
RAI 155 — 03.08.03-03	48	48
RAI 155 — 03.08.03-04	49	49
RAI 155 — 03.08.03-05	50	50
RAI 155 — 03.08.03-06	51	51
RAI 155 — 03.08.03-07	52	52
RAI 155 — 03.08.03-08	53	53
RAI 155 — 03.08.03-09	54	54
RAI 155 — 03.08.03-10	55	55
RAI 155 — 03.08.03-11	56	56
RAI 155 — 03.08.03-12	57	57
RAI 155 — 03.08.03-13	58	58
RAI 155 — 03.08.03-14	59	59
RAI 155 — 03.08.03-15	60	60
RAI 155 — 03.08.03-16	61	61
RAI 155 — 03.08.03-17	62	63
RAI 155 — 03.08.04-01	64	64
RAI 155 — 03.08.04-02	65	65
RAI 155 — 03.08.04-03	66	67
RAI 155 — 03.08.04-04	68	68
RAI 155 — 03.08.04-05	69	69
RAI 155 — 03.08.04-06	70	70
RAI 155 — 03.08.05-01	71	71
RAI 155 — 03.08.05-02	72	72

RAI 155 — 03.08.05-03	73	73
RAI 155 — 03.08.05-04	74	75
RAI 155 — 03.08.05-05	76	76
RAI 155 — 03.08.05-06	77	77
RAI 155 — 03.08.05-07	78	78
RAI 155 — 03.08.05-08	79	80
RAI 155 — 03.08.05-09	81	81
RAI 155 — 03.08.05-10	82	82
RAI 155 — 03.08.05-11	83	83
RAI 155 — 03.08.05-12	84	84
RAI 155 — 03.08.05-13	85	85
RAI 155 — 03.08.05-14	86	86
RAI 155 — 03.08.05-15	87	87
RAI 155 — 03.08.05-16	88	88
RAI 155 — 03.08.05-17	89	89
RAI 155 — 03.08.05-18	90	90

A complete answer is not provided for 73 of the 78 questions. The schedule for a technically correct and complete response to these questions is provided below.

Question #	**Response Date**
RAI 155 — 03.08.01-01	March 31, 2009
RAI 155 — 03.08.01-02	March 31, 2009
RAI 155 — 03.08.01-03	October 30, 2009
RAI 155 — 03.08.01-04	March 31, 2009
RAI 155 — 03.08.01-05	March 31, 2009
RAI 155 — 03.08.01-06	October 30, 2009
RAI 155 — 03.08.01-07	April 30, 2009
RAI 155 — 03.08.01-08	May 29, 2009
RAI 155 — 03.08.01-09	May 29, 2009
RAI 155 — 03.08.01-10	May 29, 2009
RAI 155 — 03.08.01-11	June 30, 2009
RAI 155 — 03.08.01-12	May 29, 2009
RAI 155 — 03.08.01-13	March 31, 2009
RAI 155 — 03.08.01-16	May 29, 2009
RAI 155 — 03.08.01-17	April 30, 2009
RAI 155 — 03.08.01-20	October 30, 2009
RAI 155 — 03.08.01-21	March 31, 2009
RAI 155 — 03.08.01-22	May 29, 2009
RAI 155 — 03.08.01-23	March 31, 2009
RAI 155 — 03.08.01-24	October 30, 2009
RAI 155 — 03.08.01-25	March 31, 2009

RAI 155 — 03.08.01-27	May 29, 2009
RAI 155 — 03.08.02-01	June 30, 2009
RAI 155 — 03.08.02-02	July 31, 2009
RAI 155 — 03.08.02-03	April 30, 2009
RAI 155 — 03.08.02-04	June 30, 2009
RAI 155 — 03.08.02-05	May 29, 2009
RAI 155 — 03.08.02-06	May 29, 2009
RAI 155 — 03.08.02-07	July 31, 2009
RAI 155 — 03.08.02-08	July 31, 2009
RAI 155 — 03.08.02-09	March 31, 2009
RAI 155 — 03.08.02-10	May 29, 2009
RAI 155 — 03.08.03-01	March 31, 2009
RAI 155 — 03.08.03-02	March 31, 2009
RAI 155 — 03.08.03-03	May 29, 2009
RAI 155 — 03.08.03-04	July 31, 2009
RAI 155 — 03.08.03-05	April 30, 2009
RAI 155 — 03.08.03-06	May 29, 2009
RAI 155 — 03.08.03-07	March 31, 2009
RAI 155 — 03.08.03-08	March 31, 2009
RAI 155 — 03.08.03-09	March 31, 2009
RAI 155 — 03.08.03-10	May 29, 2009
RAI 155 — 03.08.03-11	May 29, 2009
RAI 155 — 03.08.03-12	May 29, 2009
RAI 155 — 03.08.03-13	March 31, 2009
RAI 155 — 03.08.03-14	April 30, 2009
RAI 155 — 03.08.03-15	April 30, 2009
RAI 155 — 03.08.03-16	July 31, 2009
RAI 155 — 03.08.03-17	July 31, 2009
RAI 155 — 03.08.04-01	March 31, 2009
RAI 155 — 03.08.04-02	April 30, 2009
RAI 155 — 03.08.04-03	May 29, 2009
RAI 155 — 03.08.04-04	May 29, 2009
RAI 155 — 03.08.04-05	May 29, 2009
RAI 155 — 03.08.04-06	October 30, 2009
RAI 155 — 03.08.05-01	July 31, 2009
RAI 155 — 03.08.05-02	May 29, 2009
RAI 155 — 03.08.05-03	March 31, 2009
RAI 155 — 03.08.05-04	March 31, 2009
RAI 155 — 03.08.05-05	April 30, 2009
RAI 155 — 03.08.05-06	May 29, 2009
RAI 155 — 03.08.05-07	June 30, 2009
RAI 155 — 03.08.05-08	July 31, 2009
RAI 155 — 03.08.05-09	March 31, 2009
RAI 155 — 03.08.05-10	July 31, 2009

RAI 155 — 03.08.05-11	April 30, 2009
RAI 155 — 03.08.05-12	April 30, 2009
RAI 155 — 03.08.05-13	June 30, 2009
RAI 155 — 03.08.05-14	June 30, 2009
RAI 155 — 03.08.05-15	June 30, 2009
RAI 155 — 03.08.05-16	June 30, 2009
RAI 155 — 03.08.05-17	March 31, 2009
RAI 155 — 03.08.05-18	June 30, 2009

Sincerely,

Ronda Pederson
ronda.pederson@areva.com
Licensing Manager, U.S. EPR Design Certification
AREVA NP Inc.
An AREVA and Siemens company
3315 Old Forest Road
Lynchburg, VA 24506-0935
Phone: 434-832-3694
Cell: 434-841-8788

From: Getachew Tesfaye [mailto:Getachew.Tesfaye@nrc.gov]
Sent: Wednesday, January 14, 2009 9:33 AM
To: ZZ-DL-A-USEPR-DL
Cc: Jim Xu; Samir Chakrabarti; Sujit Samaddar; Michael Miernicki; Joseph Colaccino; ArevaEPRDCPEm Resource
Subject: U.S. EPR Design Certification Application RAI No. 155 (1671, 1831,1672, 1834, 1833, 1836), FSAR Ch. 3

Attached please find the subject requests for additional information (RAI). A draft of the RAI was provided to you on December 12, 2008, and discussed with your staff on January 13, 2009. No changes were made to the Draft RAI Questions as a result of that discussion. The schedule we have established for review of your application assumes technically correct and complete responses within 30 days of receipt of RAIs. For any RAIs that cannot be answered within 30 days, it is expected that a date for receipt of this information will be provided to the staff within the 30 day period so that the staff can assess how this information will impact the published schedule.

Thanks,
Getachew Tesfaye
Sr. Project Manager
NRO/DNRL/NARP
(301) 415-3361

Hearing Identifier: AREVA_EPR_DC_RAIs
Email Number: 614

Mail Envelope Properties (1F1CC1BBDC66B842A46CAC03D6B1CD4101A59D2D)

Subject: Response to U.S. EPR Design Certification Application RAI No. 155, FSAR Ch 3, Supplement 4
Sent Date: 6/30/2009 8:33:30 PM
Received Date: 6/30/2009 8:33:39 PM
From: WELLS Russell D (AREVA NP INC)

Created By: Russell.Wells@areva.com

Recipients:
"Pederson Ronda M (AREVA NP INC)" <Ronda.Pederson@areva.com>
Tracking Status: None
"BENNETT Kathy A (OFR) (AREVA NP INC)" <Kathy.Bennett@areva.com>
Tracking Status: None
"DELANO Karen V (AREVA NP INC)" <Karen.Delano@areva.com>
Tracking Status: None
"Tesfaye, Getachew" <Getachew.Tesfaye@nrc.gov>
Tracking Status: None
"Miernicki, Michael" <Michael.Miernicki@nrc.gov>
Tracking Status: None

Post Office: AUSLYNCMX02.adom.ad.corp

Files	**Size**	**Date & Time**
MESSAGE	26176	6/30/2009 8:33:39 PM
RAI 155 Supplement 4 Response US EPR DC.pdf	1595311	

Options
Priority: Standard
Return Notification: No
Reply Requested: No
Sensitivity: Normal
Expiration Date:
Recipients Received:

Response to

Request for Additional Information No. 155, Supplement 4

01/14/2009

U. S. EPR Standard Design Certification
AREVA NP Inc.
Docket No. 52-020
SRP Section: 03.08.01 - Concrete Containment
SRP Section: 03.08.02 - Steel Containment
SRP Section: 03.08.03 - Concrete and Steel Internal Structures of Steel or Concrete Containments
SRP Section: 03.08.04 - Other Seismic Category I Structures
SRP Section: 03.08.05 - Foundations
Application Section: FSAR Section 3.8

QUESTIONS for Structural Engineering Branch 2 (ESBWR/ABWR Projects) (SEB2)

Question 03.08.01-11:

FSAR Section 3.8.1.4.12 which is entitled Design Report indicates that design information and criteria for Seismic Category I structures are provided in Sections 2.0, 2.4, 2.5, 3.3, 3.5, 3.8.1 through 3.8.5. It also states that design results are presented in Appendix 3E for Seismic Category I structure critical sections. As noted in SRP 3.8.1.II.4.M (as well as corresponding sections in SRP 3.8.2 through 3.8.5), a design report is considered acceptable when it satisfies the guidelines of Appendix C to SRP Section 3.8.4. Appendix C to SRP 3.8.4 indicates that a design report contains design and construction information more specific than that contained in safety analysis reports (SARs). The design report should include a description of the structure and geometry, structural material requirements, structural loads, structural analysis and design, summary of results, and conclusions. Specific topics under each of these headings are also listed in Appendix C to SRP 3.8.4. Therefore, AREVA is requested to provide all of this information in a single Design Report that is referenced by the FSAR and to provide the Design Report to the staff for review, or alternatively, AREVA should include all of this information in a single Section/Appendix of the FSAR without the need to search numerous other FSAR sections. This also needs to be addressed for FSAR Sections 3.8.2 through 3.8.5.

Response to Question 03.08.01-11:

SRP Section 3.8.4, Appendix C identifies the criteria needed to capture critical design properties and details, and determines the requirements for reconciliation of the identified criteria during construction. Provisions within the guidance are that this information may be provided as a separate design report or within the U.S. EPR FSAR.

As identified in U.S. EPR FSAR Tier 2, Section 3.8.1.4.12, the critical design information will be provided within the U.S. EPR FSAR, and the specific sections containing the critical design properties and details are identified within this section. U.S. EPR FSAR Tier 2, Section 1.8, Table 1.8-2 provides the reconciliation requirements to be addressed by the COL applicants. References to as-built criteria to be contained within the design reports are not applicable to the design certification. The U.S. EPR FSAR complies with the guidance of RG 1.206 and NUREG-0800.

FSAR Impact:

The U.S. EPR FSAR will not be changed as a result of this question.

Question 03.08.02-1:

SRP 3.8.2 provides the acceptable codes and regulatory guides for design of metal containments. For the EPR RCB, metal components not backed by concrete that perform a containment function must be designed to the ASME Code Section III, Division 1, Subsection NE. FSAR Section 3.8.2.2 does not delineate the boundaries between the concrete pressure boundary components and the steel pressure boundary components. SRP 3.8.2 requires that sufficient information be provided to define the primary structural elements relied upon to perform the containment function. Provide additional detail to describe the steel components providing a containment function under Subsection NE of the ASME III Division 1 Code, including figures which show the code boundaries, complete geometric details and dimensions, and material thicknesses for the equipment hatch, the air locks, the construction opening, and the high energy piping penetrations.

FSAR Section 3.8.2.6 states "Steel items that are not backed by concrete that are part of the containment pressure boundary are fabricated from materials that meet the requirements specified in Article NE-2000 of Section III, Division 1 of the ASME BPV Code, except as modified by applicable and acceptable ASME BPV Code cases." The specific materials used in fabrication are not identified. Provide a list of the specific materials used for the steel components of the RCB pressure boundary, along with their procurement and supplemental requirements, and the extent of compliance with Article NE-2000 of the ASME Code, Section III, Division 1.

Response to Question 03.08.02-1:

Boundaries between the Reactor Containment Building (RCB) and steel pressure boundary components are as defined in ASME Code Section III, Division 1, Paragraph NE-1132. U.S. EPR FSAR Tier 2, Section 3.8.2.2 will be revised to include this information.

U.S. EPR FSAR Tier 2, Section 3.8, Figures 3.8-25 through Figure 3.8-31 are representations of steel pressure boundary components. Steel pressure boundary components that are not backed by concrete are prefabricated procurement items. As a result, geometric details, dimensions, material specifications, and code boundaries of these components will be developed later in the design process. Vendors will design, analyze, select material, and manufacture these items in accordance with Appendix B programs and in compliance with NRC accepted ASME Code requirements.

FSAR Impact:

U.S. EPR FSAR Tier 2, Section 3.8.2.2 will be revised as described in the response and as indicated on the enclosed markup.

Question 03.08.02-4:

FSAR Section 3.8.2.4 - Design and Analysis Procedures, states that the evaluation of buckling for shells with more complex geometries and loading conditions than those covered by Article NE 3133 of the Code, is in accordance with ASME BPV Code Case N-284-1 and additional guidance in RG 1.193. Describe the specific applications of NE 3130 and Code Case N-284 to buckling analysis of steel closures for containment penetrations.

Also describe how geometric imperfections were considered in the calculation and the basis for the assumptions made. This is a requirement in NE 3133 of the Code.

Response to Question 03.08.02-4:

U.S. EPR FSAR Tier 2, Section 3.8.2.4 addresses specific steel items described in U.S. EPR FSAR Tier 2, Section 3.8.2.1. These items represent portions of the components that are embedded in containment concrete as well as portions not embedded in containment concrete. ASME Section III, Division 1 design requirements apply to those portions that are not embedded.

Portions of components not embedded in concrete are subject to external loading that produces compressive stresses. Because of the complex configuration of these components, design, fabrication, and testing are performed to specification by a specialty fabricator in accordance with applicable codes and standards. These fabricators will be qualified for nuclear fabrication in compliance with Section NE-4000 and Subsection NCA of ASME Section III, Division 1 for the design, fabrication, and testing of these types of components. Fabrication specifications will be provided for materials, fabrication methods, tolerances, and other dimensional control requirements. Specifications will also control testing and inspections required during fabrication and construction, quality assurance requirements, and documentation to be provided by the fabricator and the erector. Calculations prepared as part of required documentation will indicate the methods used to qualify the design of the components.

Geometric imperfection tolerances will be provided as part of fabrication specifications and will include U.S. EPR FSAR requirements, specifically code Case N-284; RG 1.193; and ASME, Section NE 3130. Assumed imperfections will be modeled in component design analyses and imperfection limits will be included in fabrication acceptance criteria.

FSAR Impact:

The U.S. EPR FSAR will not be changed as a result of this question.

Question 03.08.05-7:

In FSAR Section 3.8.5.4.2 there is a discussion of the use of tri-linear springs used for the development of soil cases 4u and 2sn4u. AREVA is requested to provide the following additional information regarding the development and use of these tri-linear springs in the analysis of the foundation of the common basemat NI structure:

1. Describe what is meant by the statement that the tri-linear springs are developed in order to mitigate unrealistic analysis results generated by the NI common basemat structure static model. Provide a comparison of results to support this discussion.

2. Discuss why the other soil conditions do not produce this situation.

3. Provide the basis for the development of the properties used in the tri-linear springs for this application.

4. These springs were developed assuming a subsurface soil of relatively high plasticity clay. What is the impact of assuming a variation of this clay material for these two soil cases? Why was clay material selected and how would the results compare if granular material were selected?

5. Provide the relationship developed between the displacement of the foundation base mat and the corresponding average reaction imposed by the underlying soil medium.

Response to Question 03.08.05-7:

1. Tri-linear springs allow degradation of stiffness with increasing bearing pressure in pseudo-static analysis; particularly at rigid foundation ends. Initial stiffness is consistent with small strains. This initial stiffness results in relatively large soil bearing capacity in response to seismic overturning moments, which may not be sustainable by foundation soils. Tri-linear spring-stiffness representations are approximated based on modulus reduction curves consistent with the associated strains. Spring stiffness depends on vertical displacement in addition to initial dynamic stiffness. Figures 03.08.05-7.1-1 and 03.08.05-7.1-2 show bearing pressure comparison of tri-linear and elastic soil springs for soil case 4u.

Figure 03.08.05-7.1-1—Bearing Pressure under tri-linear soil spring (Soil Case 4U)

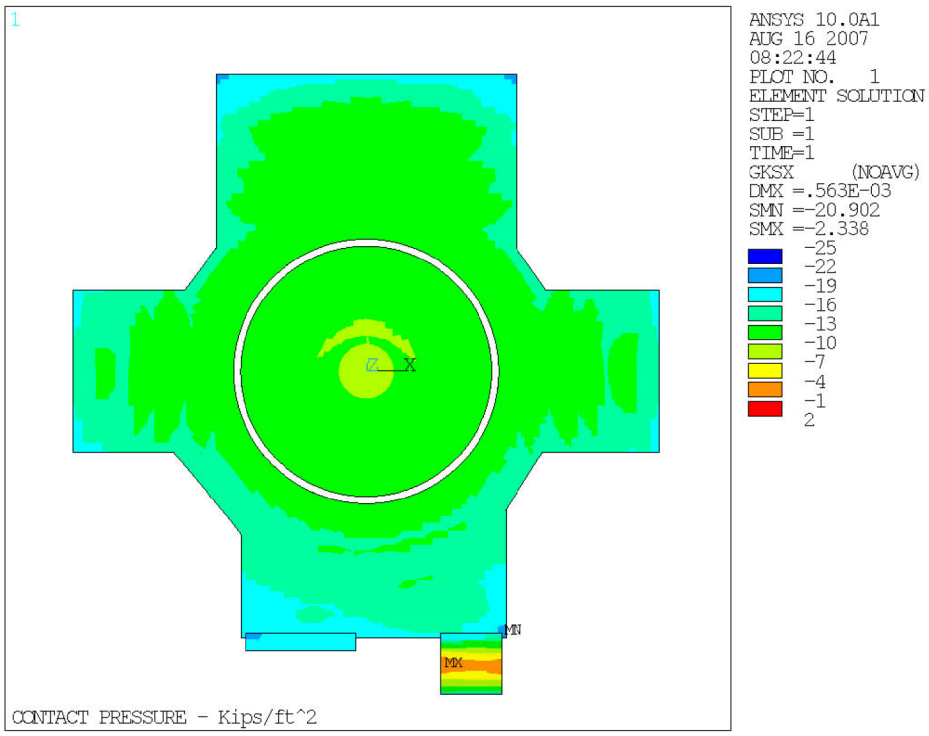

Note: Tri-linear soil spring was modeled using interface element INTER195 in ANSYS. The negative contour plot indicates compression.

Figure 03.08.05-7.1-2—Bearing Pressure under elastic soil spring (Soil Case 4U)

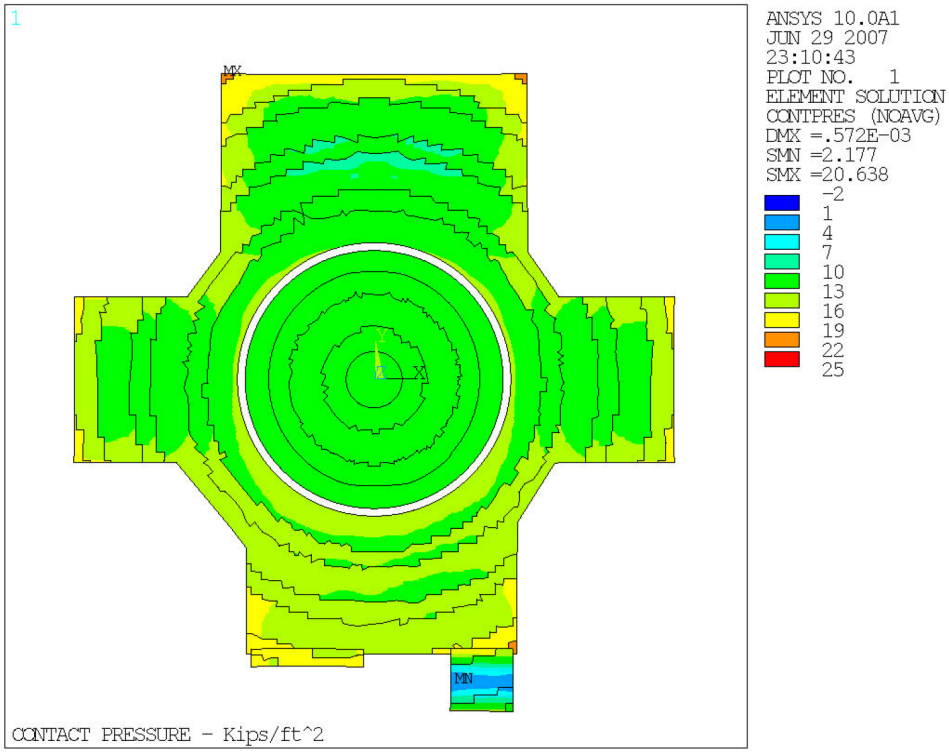

2. Non-linear springs are introduced to improve (make more conservative) response predictions produced by linear elastic analysis. Non-linear springs are specifically used for examination of: (1) maximum bearing pressures due to seismic overturning moments and (2) sliding factor of safety.

   Soil Cases 4u and 2sn4u represent stiff clay soils that are evaluated as additional controlling cases to assess potential local failure of a supporting soil subjected to maximum bearing pressures created by seismic overturning moments. Tri-linear static and dynamic spring stiffness for soil cases 4u and 2sn4u and soil case 1u (the case that represents vulnerability to large displacements) represent lower and upper bounds for clay soils.

   When seismic displacement is significant, subsurface soil profiles tend to yield a non-linear response. Soil cases 4u and 2sn4u (along with Case 1u evaluated in a separate study) are selected to provide bounding seismic responses. For example, a stiff geotechnical foundation medium, such as rock, has a smaller likelihood of non-linear response but also produces higher bearing pressures and a corresponding higher bearing capacity.

3. Tri-linear springs are based on shear strain curves used in calculating dynamic spring constants for soil cases 4u and 2sn4u. These soils are assumed to be comprised of stiff clays having a plasticity index of 60.

4. Granular soils were evaluated as other parametric cases. Soil cases 4u and 2sn4u were developed specifically to address deep soil sites consisting of clay materials. A plasticity index of 60 is typical of predominantly clay soils. Soil cases 4u and 2sn4u are bounding

cases used to assess potential localized soil failure due to high basemat bearing pressures encountered during limiting seismic events.

5. Figure 03.08.05-7.5-1 shows relationship between foundation basemat displacement and the corresponding reaction imposed by the underlying soil medium.

Figure 03.08.05-7.5-1—Subgrade Reaction – Displacement Relation for Soil Case 1u

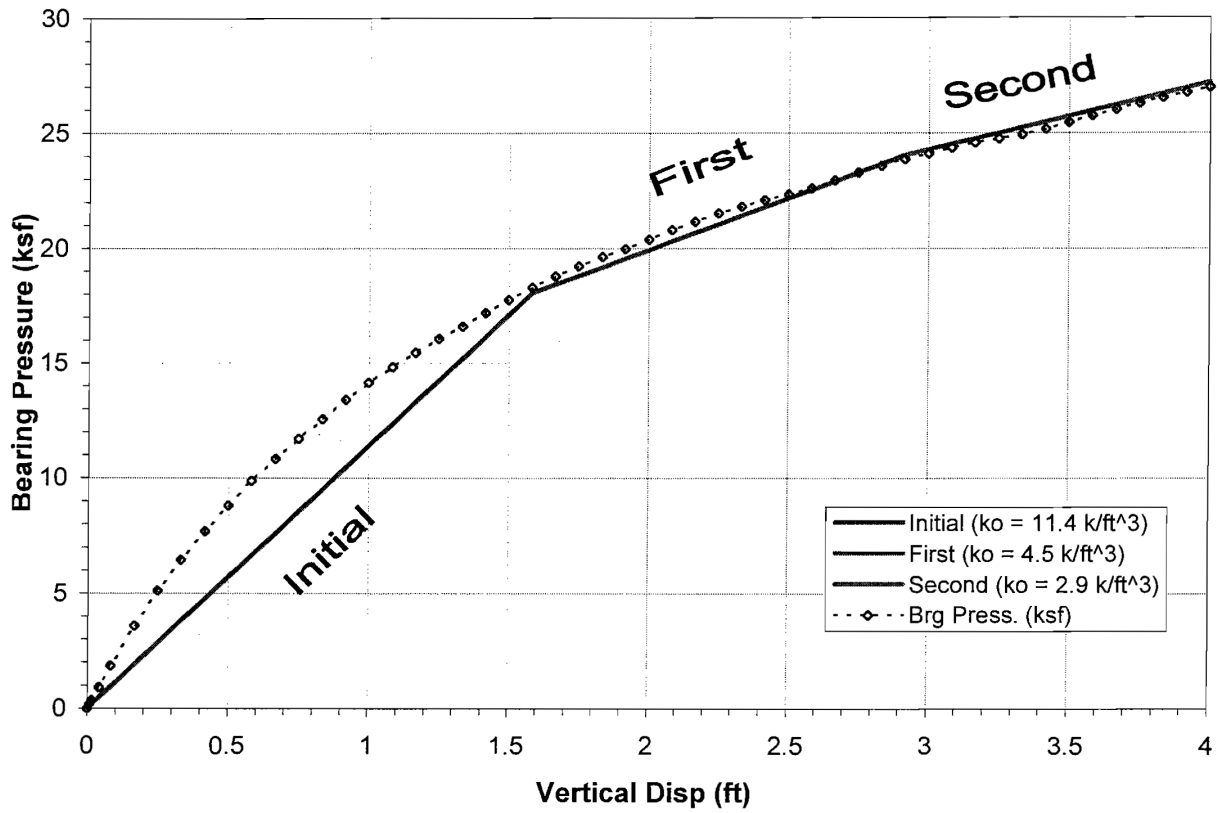

FSAR Impact:

The U.S. EPR FSAR will not be changed as a result of this question.

Question 03.08.05-13:

FSAR Section 3.8.5.6.1 states that epoxy coated rebar will be considered on a site-specific basis, for use in foundations when groundwater may adversely affect the long-term durability of the concrete foundation. The implication is that epoxy coated rebar should be used for sites where groundwater may induce corrosion of rebar. However, no criteria are provided that can be used by a COL applicant to judge if such potential exists. Furthermore, epoxy coating may not provide significant protection against corrosion if small cracks or knicks in the epoxy are developed as is typical at construction sites. Provide in the EPR FSAR guidance that can be used by the COL applicant to compare with site-specific parameters to decide if groundwater corrosion is a concern and epoxy coated rebar should be used.

Section 3.8.5.6.1 also indicates that requirements for epoxy-coated rebar may be waived if a site-specific permanent dewatering system is provided. The EPR FSAR should specify that if a permanent dewatering system is used to protect Seismic Category I SSCs, then such a system should also be designated as a Seismic Category I system, unless further technical justification is provided to justify otherwise.

Response to Question 03.08.05-13:

A) Although concrete is inherently alkaline, providing chemical passivity and natural protection of embedded steel, situations may arise where additional measures are needed to confirm long-term serviceability of concrete structures below grade. When concrete structures below grade will be exposed to aggressive water that contains sulfates or chlorides above threshold levels, epoxy coated rebar should be considered for use as a mitigating measure. The following tables show information from ACI 349-01, Tables 4.3.1 and 4.4.1 that identify the groundwater chemistry points at which aggressive conditions commence.

Water Soluble Sulfate (SO_4)		
Type of exposure	**Water-soluble sulfate (SO_4) in soil, % by weight**	**Dissolved sulfate (SO_4) in water, ppm**
External Sulfate Solution	>0.20	>1500

Water Soluble Chloride (Cl^-) in Concrete (% by weight of cement)		
Type of exposure	Reinforced concrete	Prestressed concrete
External Moisture and Chloride	> 0.15	> 0.06

NI structure concrete exposed to aggressive environments will meet applicable requirements of ACI 349-01, Chapter 4 “Durability Requirements” or ASME, Section III, Division 2. U.S. EPR FSAR Tier 2, Section 1.8, Table 1.8-2, COL Item 3.8-11 requires a COL applicant referencing the U.S. EPR design to evaluate groundwater to determine if water proofing membranes and epoxy coated rebar should be used. COL Item 3.8-12 requires a COL applicant referencing the U.S. EPR design certification to examine Category I concrete

structure below grade and monitor groundwater chemistry. The U.S. EPR FSAR requires conformance with the ACI Code of record, which will govern measures taken consequent to these evaluations. When epoxy coated rebar is required, installation will follow construction procedures that conform to NRC accepted codes or standards.

B) U.S. EPR Category 1 structures are designed to withstand limiting design loads including hydrostatic loads. Dewatering systems, if used, mitigate potentially aggressive groundwater effects, minimize seepage, and decrease long-term structure maintenance. Dewatering systems perform no safety-related function and are not classified as Category 1. This is consistent with U.S. EPR FSAR Tier 2, Section 3.4.2 and the Response to RAI 162, Question 03.04.02-2.

FSAR Impact:

The U.S. EPR FSAR will not be changed as a result of this question.

Question 03.08.05-14:

FSAR Section 3.8.5.6.1 indicates that a textured geo-synthetic material will be considered on a site-specific basis for use as a waterproofing material, as shown in Figure 3.8-117. This figure indicates that the membrane will be placed between two halves of the mud mat, each about 3" thick. AREVA is requested to address the items listed below related to the use of this waterproofing material and provide further guidance in the EPR FSAR regarding its use:

1. If the first 3" thick half is poured (a very thin mud mat), what will be its potential for cracking and separation under site operational loads? What is the minimum mesh steel to be used for each half of the mud mat? What should be the crack size limits for the mud mat before the water-stopping capability of the membrane is compromised? How is the horizontal membrane to be placed between the two halves to be connected to the vertical waterproofing placed on the surrounding construction walls to provide a complete water barrier for the Category I structures?

2. The waterproofing membrane is indicated in Figure 3.8-117 to be "double-textured," implying that it is roughened on both sides. Explain how this waterproofing membrane achieves a 0.7 coefficient of friction, and how does the construction sequence (placing it on the already hardened concrete mud mat) affects this coefficient of friction. Furthermore, provide the basis for stating that the membrane is not safety related in light of the fact that it must transfer bearing loads, shear loads, and achieve a coefficient of friction of 0.7.

3. FSAR Section 3.8.5.6.1 indicates that the waterproofing membrane will be required for sites with a high water table. Considering that most soils can attract water to significant heights above the free ground water level by capillarity effects, how close does the free ground water table have to be to the bottom of the basemat before such waterproofing is required? Will the existence of perched ground water conditions also require the use of waterproofing? In fact, since the location of perched aquifers is always a serious potential at soil sites, explain why the waterproofing membrane should not always be included in the construction?

Response to Question 03.08.05-14:

1. Cracking and separation under site operational load will be mitigated by use of concrete material specifications, construction loading activities, and by using a well prepared and compacted base. Additionally, the lower portion of the mat will be constructed with a minimum of 0.15% by area of reinforcing steel. The upper mud mat, while not reinforced (Reference U.S. EPR FSAR Tier 2, Figure 3.8-117) will be provided with control joints. Control joint spacing will be controlled by construction specifications and drawings, but typical spacing will be twelve feet on centers in both directions for a nominal three inch slab thickness. Overall spacing between joints will depend on design thickness and performance requirements.

   The mud mat is subject to the same design requirements as foundation bearing soils, thus there is no limit on mud mat crack size. Membrane testing will be performed according to procurement specifications to evaluate membrane ductility, durability, and other mechanical properties to reasonably assure global integrity. Membrane properties will be established by procurement specifications. Membrane properties typically include:

   – Wide-Width Tensile Behavior.

- Index Tensile Behavior.
- Axi-Symmetric Tensile Behavior.
- Seams Tensile Behavior.
- Tear Resistance.
- Impact Resistance.
- Puncture Resistance.
- Interface Friction Angle.

The membrane will be installed according to manufacturer recommendations and configured to achieve the required design properties, including angle of internal friction. Conceptually, the membrane mud mat to vertical concrete surface transition will be installed around chamfers or radial bends at the 90 degree interface as shown in Figure 03.08.05-14.1-1.

Figure 03.08.05-14.1-1—Conceptual Wall Edge for Waterproofing Membrane

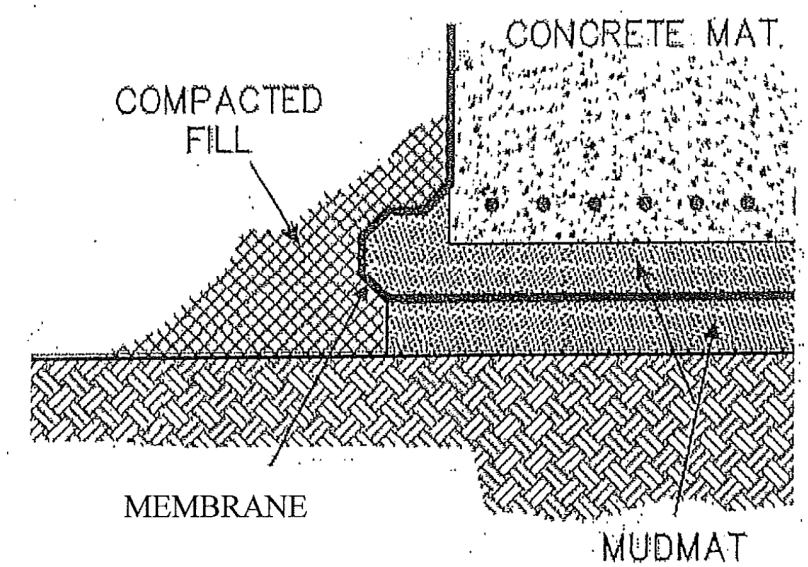

2. U.S. EPR FSAR Tier 2, Section 3.8.5.6.1 describes vendor testing for evaluating frictional characteristics of the textured waterproofing membrane. To achieve the required interfacial strength, the mud mat is to be finished in accordance with ACI 301, Section 5.3.4.2d, which requires the surface to be roughened to a minimum of ¼" full amplitude in two perpendicular directions as determined by testing. The membrane does not serve as a barrier to moisture, and during strong ground motion membrane water resistance may be decreased by deterioration. The mud mat-membrane system will be designed to achieve the required coefficient of friction and shear. This will be achieved by granular interlock of the mud mat with the membrane through bearing or adhesive properties at the interface between the

concrete and membrane; the location at which the membrane will be subject to combined shear and bearing loads.

3. The Category 1 structure is the flood barrier. Presence of moisture does not necessarily cause structural concrete deterioration and tends to facilitate strengthening of concrete with time. COL applicants who reference the U.S. EPR design are required to identify aggressive environments, free moisture with sufficient hydraulic gradient to potentially erode or otherwise cause deterioration of the structure, and provide mitigating measures on a site-specific basis as provided by U.S. EPR FSAR Tier 2, Section 1.8, Table 1.8-2, Item 3.8-11. Where groundwater chemistry or hydraulic gradient do not warrant its use, omission of the membrane can simplify construction, eliminate associated testing, and provide less complex shear and bearing load transfer.

U.S. EPR FSAR Tier 1, Section 2.1.1, paragraph 3.6 will be revised to clarify the function of water-resisting measures that may be taken when site-specific conditions so indicate.

FSAR Impact:

U.S. EPR FSAR, Tier 1, Section 2.1.1 will be revised as described in the response and indicated on the enclosed markup.

Question 03.08.05-15:

FSAR Section 3.8.5.6.3 indicates that no special construction techniques need to be considered for this foundation system. However, as with all such heavy foundations of this size, the process for pouring these heavy sections needs to be carefully considered to ensure that differential settlements, particularly at softer soil sites, will not cause any distress to the system. For other generic plant designs, studies were performed to provide limitations to the construction process to ensure relatively uniform loads over the plan area. Although some mention is made in FSAR Section 3.8.5.5.1 of such differential settlement questions, no indication is provided to indicate if such studies have been performed for the EPR. AREVA is requested to provide the details of such studies of potential differential construction settlements for review.

Response to Question 03.08.05-15:

No special construction techniques as stated in U.S. EPR FSAR Tier 2, Section 3.8.5.6.3 means that standard construction practices are anticipated for use in constructing the U.S. EPR basemat and that no new or special technology is required. The statement was not intended to impose limitations on the sequence of construction.

Construction sequencing controls the order in which the mat foundation is loaded. Due to U.S. EPR design, Reactor Containment Building and Shield Building, which is the largest and heaviest basemat situated structure, is at the center of the basemat. Erection of this structure will be substantially underway before construction of surrounding structures can be commenced. This aspect of U.S. EPR design imposes inherent construction sequencing that promotes concentric, evenly distributed loading This provides for evenly distributed loading of site soils, increases rigidity of the basemat, and allows unobstructed access to the containment construction area. Thus, U.S. EPR passive design considerations inherently control construction sequence and the basemat's cruciform design minimizes potential differential settlement associated with construction.

Controls placed in the FSAR include differential movement for local (0.5 inch in 50 feet) and global conditions (3.0 inch differential) are included in the U.S. EPR FSAR. The standard U.S. EPR design considers generic structural differential settlement, not site specific. U.S. EPR FSAR, Tier 2, Section 2.5.4.10.2, describes settlement limits for Category I structures. U.S. EPR FSAR Tier 2, Section 1.8, Table 1.8-2, Item No. 2.5-6, Item No. 2.5-7, and Item No. 3.8-13 are provided to assure compliance with this design requirement.

Control of construction sequence are not necessary for the U.S. EPR design because design and configuration of the basemat inherently increases rigidity by placement of the containment structure early in the sequence. The largest mass being placed at the center of the basemat early in construction minimizes non-uniform loading of the slab. Settlement control criteria are performance based and these limits implement design and construction considerations.

FSAR Impact:

The U.S. EPR FSAR will not be changed as a result of this question.

Question 03.08.05-16:

Various parts of FSAR Section 3.8.5 describe seismic analyses performed for the foundation of the structures. These seismic analyses had assumed certain soil properties in developing the models and calculating the response of the structures. These soil properties were used in developing soil springs for the overall NI structure, the brick element layer beneath the basemat in the second model, the coefficient of friction for sliding, calculation of lateral earth pressures, and other calculations. These include the soil properties beneath the basemat and the backfill materials at the embedded walls and basemat. AREVA is requested to identify the set of soil properties used in the various seismic analyses and designs of Seismic Category I structures and explain how this set of parameters will be ensured by the COL applicant. In addition, identify what testing requirements are to be performed by the COL applicant to be assured that the set of soil criteria are met. This information should be included in the EPR FSAR.

Response to Question 03.08.05-16:

Soil and ground motion properties used in seismic analysis and design of Seismic Category I structures are presented within U.S. EPR FSAR Tier 2, Sections 2.5.2, 2.5.4, and 3.8.5.4 including Tables 3.8-13 and 3.8-14. U.S EPR FSAR Tier 1, Section 5, Table 5.0-1 (Site Parameters for the U.S. EPR Design) contains bounding soil properties. Soil springs referenced in Table 3.8-13 and Table 3.8-14 provide the range of soil moduli considered in soil response analyses and these values are also described in U.S. EPR Tier 1, Section 5, Table 5.0-1. Site soil that is bounded by the values specified by Table 5.0-1 and conformance with design parameters described in U.S. EPR FSAR Tier 2, Section 2.5 provides for adequate soil-structure interaction performance.

FSAR Impact:

The U.S. EPR FSAR will not be changed as a result of this question.

Question 03.08.05-18:

A review of EPR FSAR Tier 1, Table 5.0-1, Site Parameters for the U.S. EPR Design and Tier 2, Table 2.1-1, U.S. EPR Site Design Envelope shows that a number of site parameters used in the analysis and design of structures are not included. Some examples include the bearing capacities for all Seismic Category I structures (not just the NI basemat), the dynamic bearing capacities (not just the static bearing capacity), soil parameters such as the soil minimum friction angle of 35 degrees, permissible horizontal and vertical variation in soil properties, and total building settlements beneath each Seismic Category I structure (not just relative displacements). AREVA is requested to review all important analysis and design parameters used in the calculations and ensure that these parameters are included in these two tables, or provide the technical justification for excluding them.

Response to Question 03.08.05-18:

Information requested with this response is related to information requested by RAI 155 Question 03.08.05-12.

This response will be furnished as a part of RAI 155 Supplement 5 scheduled for July 31, 2008.

U.S. EPR Final Safety Analysis Report Markups

2.0 System Based Design Description of ITAAC

2.1 Structures

2.1.1 Nuclear Island

1.0 Description

The Nuclear Island (NI) consists of the structures supported by the NI Common Basemat and the NI Common Basemat itself. The NI includes the Reactor Building (RB), Safeguard Buildings (SB), Fuel Building (FB), Main Steam Valve Rooms, NI Foundation Common Basemat, Vent Stack, and Stair Towers. The physical arrangement of the NI structures is shown on Figure 2.1.1-1 and Figure 2.1.1-2. Information in tables and figures in this section are for information only with the exception of the specific features listed in the ITAAC for verification.

The NI foundation common basemat is a heavily reinforced concrete slab, approximately 360 ft x 360 ft x 10 ft thick, which supports NI structures including the RB, FB, and SBs. The NI foundation common basemat acts together with the Reactor Containment Building (RCB) to maintain an essentially leak-tight barrier against the uncontrolled release of radioactivity to the environment and to maintain containment design conditions important to safety so that they are not exceeded for as long as postulated accident conditions require. ITAAC for testing the essentially leak-tight barrier is addressed in Tier 1, Section 3.3.

Structures, systems and components (SSC) important to safety are designed and located to minimize the probability and effect of fires and explosions. This is done, in part, by compartmentalization of the plant into separate fire areas. Specifically, based on the hazards and the need for physical separation of SSC important to safety, the plant is segregated into separate fire areas by passive, fire-rated structural barriers (i.e., walls, floors, and ceilings).

A continuous structural barrier is formed around the RB, FB, and SB 2/3 structures as shown on Figure 2.1.1-2 and Figure 2.1.1-3. This barrier is designed to provide protection against design basis external hazards such as hurricanes and tornados, and certain beyond design basis events such as aircraft hazard and explosion pressure waves.

2.0 Arrangement

2.1 The as-installed basic configuration of the NI structures is as shown on Figure 2.1.1-1 and Figure 2.1.1-2.

3.0 Key Design Features

3.1 The basic configuration of the NI structures includes:

3.1a A continuous structural barrier;

3.1b Decoupling of SB 2/3 and FB internal structures from their outer external hazards barrier walls, at their exterior walls along the entire wall length and the upper ceiling, and from the RSB above elevation 0 feet, 0 inches.

3.2 The NI site grade level is located between 12 inches and 18 inches below the finish floor elevation at the ground entrances.

3.3 The NI structures include barriers for post-accident radiation shielding as described in Table 2.1.1-3.

3.4 A pipe break hazards analysis summary exists that concludes the plant can be shut down safely and maintained in cold safe shutdown following a pipe break with loss of offsite power.

3.5 Essential SSCs in RB, SBs and FB rooms listed in Table 2.1.1-6 are protected from the dynamic effects of pipe breaks.

03.08.05-14, Item 3

3.6 ~~Portions of NI Seismic Category I structures located below grade elevation are protected from external flooding by waterstops, water tight seals and waterproofing.~~ Portions of Seismic Category I structures that are located below grade elevation and exposed to aggressive soil or groundwater conditions will use waterstops, water tight seals, and waterproofing materials as required to mitigate deterioration.

3.7 The NI structures have key design dimensions that are confirmed after construction.

4.0 Interface Requirements

There are no interface requirements for the NI Structures.

5.0 Inspections, Tests, Analyses, and Acceptance Criteria

Table 2.1.1-4 lists the NI ITAAC.

inservice inspection of steel portions of the RCB that are intended to resist pressure, but are not backed by structural concrete (GDC 1, GDC 2, GDC 4, GDC 16 and GDC 50).

03.08.02-1

The boundaries between the RCB and the steel pressure boundary component consist of those defined in ASME Code, Section III, Division I, Paragraph NE-1132.

Section 3.8.1.2 describes codes, standards, and specifications applicable to the containment steel liner.

3.8.2.2.1 Codes

- ANSI/AISC N690-1994 (R2004), Specification for the Design, Fabrication, and Erection of Steel Safety-Related Structures for Nuclear Facilities, including Supplement 2.
- ANSI/AWS D1.1/D1.1M-2006, Structural Welding Code – Steel.
- ANSI/AWS D1.6-1999, Structural Welding Code – Stainless Steel.
- ASME BPV Code – 2004 Edition:
  - Section II – Material Specifications.
  - Section III, Division 1 – Nuclear Power Plant Components.
  - Section V – Nondestructive Examination.
  - Section VIII – Pressure Vessels.
  - Section IX – Welding and Brazing Qualifications.
- Acceptable ASME BPV Code cases per RG 1.84.

3.8.2.2.2 Standards and Specifications

Industry standards such as those published by ASTM are used to define material properties, testing procedures, fabrication, and construction methods. The applicable ASTM standard specifications for materials are those permitted by Article NE-2000 of Section III, Division 1 of the ASME BPV Code. Applicable ASTM standard specifications for nondestructive methods of examination are those referenced in Appendix X and Article X-3000 of Section III, Division 1 of the ASME BPV Code.

Structural specifications cover the design of steel portions of the containment pressure boundary. These specifications cover the following areas:

- Equipment hatch and airlocks.
- Piping penetration sleeves.