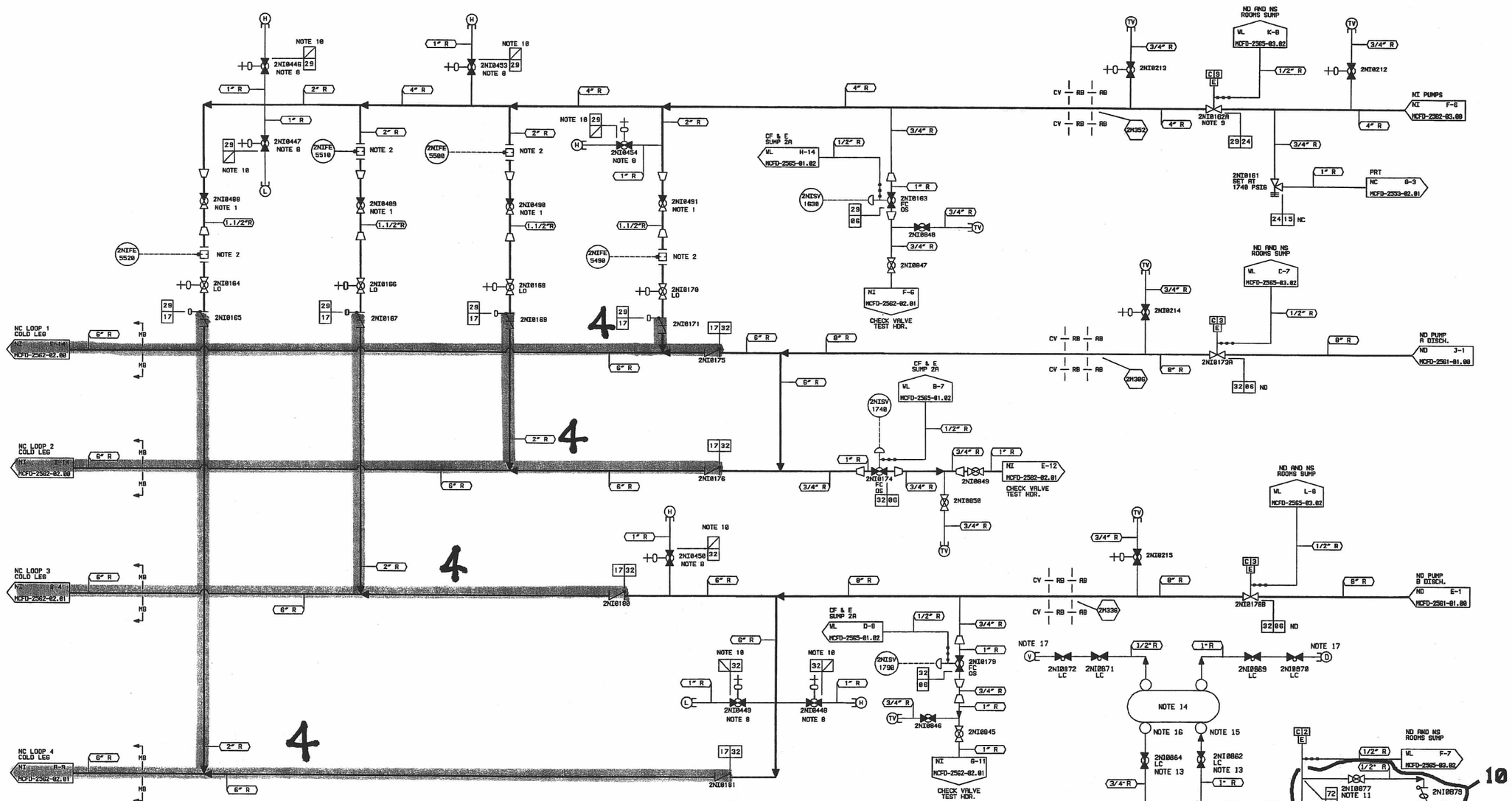

NOTE(S)

1. ADJUST VALVES IN FIELD TO LIMIT PUMP RUNOUT, THEN LOCK.
2. FLOW METERING ORIFICE TO VERIFY FLOW DURING PREOPERATIONAL TESTING.
3. THE SUMP REPRESENTATION IS NOT INTENDED TO ILLUSTRATE STRUCTURAL DESIGN.
4. GUARDED PIPE FROM SUMP TO JUST OUTSIDE REACTOR BUILDING WALL.
5. DELETED
6. DELETED
7. GUARD PIPE IS IDENTIFIED AS PARAGRAPH NUMBER 38.
8. HIGH POINT VENTS AND DRAINS ADDED BY CONSTRUCTION FOR FLUSH AND HYDRO.
9. VALVE 2NI0162A HAS A MAX STROKE TIME OF 20 SECONDS.
10. VENT AND DRAIN ASSEMBLIES ARE TO BE FABRICATED AND INSTALLED IN ACCORDANCE WITH MCS-1206.00-02-0002 USING ENGINEERING SPECIFICATION MDG-ES-1A, 1B, 1C AND 1D.
11. VALVE BONNET EQUALIZATION LINE. IF NECESSARY TO CLOSE, DO NOT OVER TIGHTEN.
12. FOR SUMP DRAWING SEE MCM 1051-00.0007-001
13. ALL VALVES ARE INSTALLED WITH FLOW DIRECTION TOWARD THE 18" PIPING. ALL PIPING IS SCH.80.
14. ECCS SUMP PIPING DRAIN RESERVOIR.
15. ECCS SUMP PIPING DRAIN PATH TO RESERVOIR.
16. ECCS SUMP PIPING VENT PATH TO RESERVOIR.
17. NON QA QUICK-CONNECT INSTRUMENT FITTING WITH A CAP IS INSTALLED.

DESIGN PARAMETERS

LINE LISTING	PIPE SPEC.	PRESSURE	TEMPERATURE	CLASS	MATERIAL
NC15	PS 151.2	100 PSIG	350 F	B	SS
ND03	PS 401.2	450 PSIG	350 F	B	SS
ND06	PS 601.2	600 PSIG	350 F	B	SS
NI06	PS 2501.4	2485 PSIG	650 F	E	SS
NI17	PS 2501.1	2485 PSIG	650 F	A	SS
NI24	PS 1501.2	1400 PSIG	100 F	B	SS
NI29	PS 2501.2	2485 PSIG	650 F	B	SS
NI32	PS 2501.2	2485 PSIG	650 F	B	SS
NI34	PS 151.2	22 PSIG	250 F	B	SS
NI35	PS 401.2	450 PSIG	350 F	B	SS
NOTE 7 NI38	PS 150.7	22 PSIG	250 F	B	CS
NI72	TS 2701.1	450 PSIG	350 F	B	ST
WL35	TS 2701.1	50 PSIG	200 F	E	ST
WL43	TS 2701.1	100 PSIG	200 F	E	ST

Verified as of 05/28/2009 at 14:40:50

NOTE: DRAWING MCFD-2562-03.01 REPLACES MC-2562-3.1 REV. 7

QA CONDITION 1 AND 2

DUKE POWER COMPANY
MCGUIRE NUCLEAR STATION UNIT 2

FLOW DIAGRAM OF
SAFETY INJECTION SYSTEM
(NI)

NO	REVISIONS	DRN	DATE	CHKD	DATE	APPR	DATE
10	AS-BUILT PER MD201127/EX. CODE G.8	DRP	95-13 08	JRC	95-13 08	MWM	95-13 08
9	PER M-06-04932/EXEMPT CODE G.8	CJZ	95-15 07	DRP	95-19 07	RDM	95-26 07

DESIGNER RW REVELS DATE 88-24-85 INSP. R. FLING DATE 08-30-95
DRAWN JW WILLIAMS DATE 88-23-95 INSP. MN DICKS DATE 10-28-95
CHECKED MJ PLESO DATE 88-23-95 APPR. RA HARRIS DATE 11-02-95
SCALE DWG. NO. MCFD-2562-03.01 REV 10

ERN: MC0908X

D18