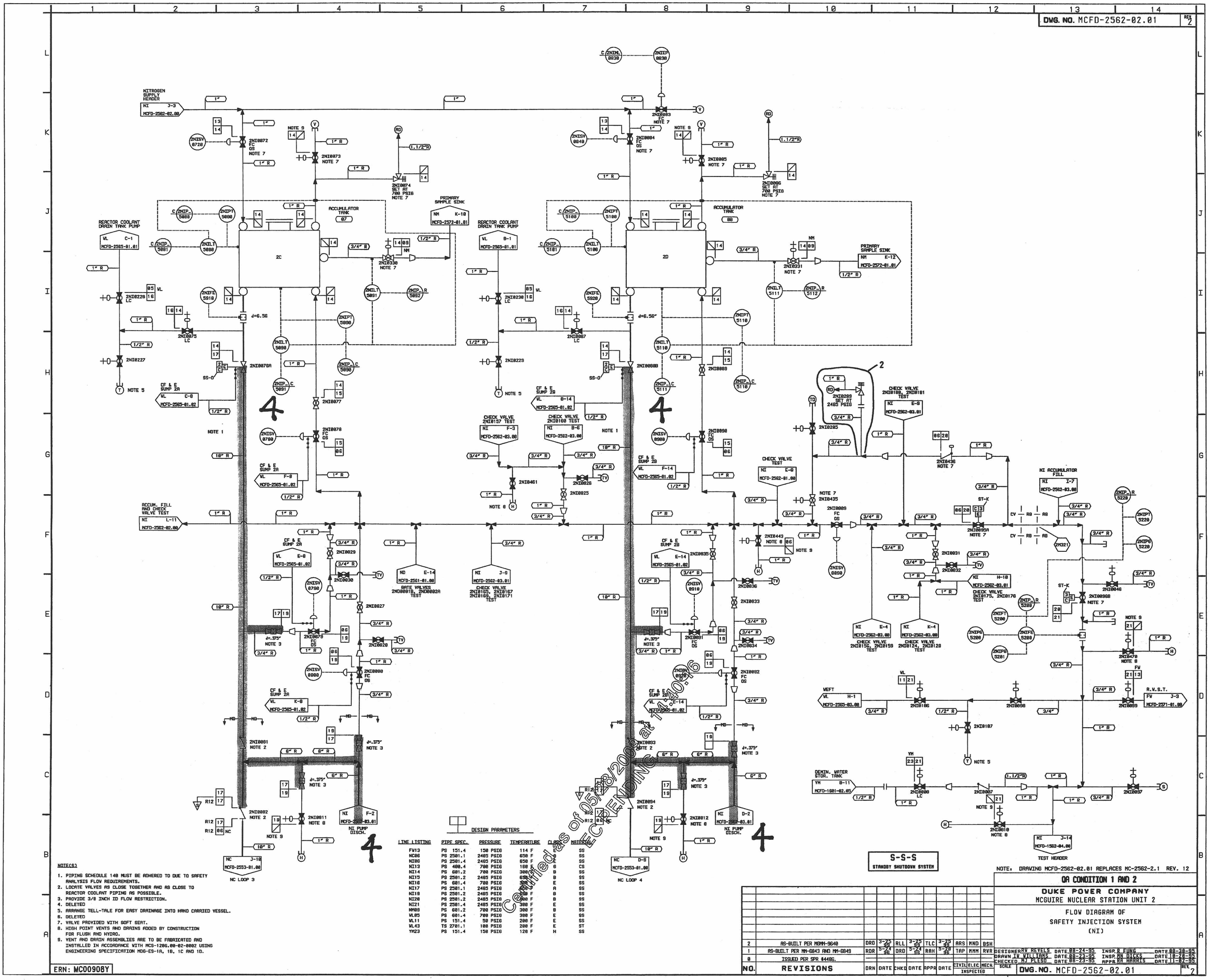

DESIGN PARAMETERS

LINE LISTING	PIPE SPEC.	PRESSURE	TEMPERATURE	CLASS	MATERIAL
FW13	PS 151.4	150 PSIG	114 F	E	SS
NC06	PS 2501.1	2485 PSIG	650 F	A	SS
NI06	PS 2501.4	2485 PSIG	650 F	E	SS
NI13	PS 400.4	700 PSIG	160 F	G	CS
NI14	PS 601.2	700 PSIG	300 F	B	SS
NI15	PS 2501.2	2485 PSIG	650 F	B	SS
NI16	PS 601.4	700 PSIG	300 F	E	SS
NI17	PS 2501.1	2485 PSIG	650 F	A	SS
NI19	PS 2501.2	2485 PSIG	650 F	B	SS
NI20	PS 2501.2	2485 PSIG	300 F	B	SS
NI21	PS 2501.4	2485 PSIG	300 F	E	SS
NM09	PS 601.2	700 PSIG	300 F	B	SS
WL05	PS 601.4	700 PSIG	300 F	E	SS
WL11	PS 151.4	50 PSIG	200 F	E	SS
WL43	TS 2701.1	100 PSIG	200 F	E	ST
YM23	PS 151.4	150 PSIG	120 F	H	SS

NOTE(S)

1. PIPING SCHEDULE 140 MUST BE ADHERED TO DUE TO SAFETY ANALYSIS FLOW REQUIREMENTS.
2. LOCATE VALVES AS CLOSE TOGETHER AND AS CLOSE TO REACTOR COOLANT PIPING AS POSSIBLE.
3. PROVIDE 3/8 INCH ID FLOW RESTRICTION.
4. DELETED
5. ARRANGE TELL-TALE FOR EASY DRAINAGE INTO HAND CARRIED VESSEL.
6. DELETED
7. VALVE PROVIDED WITH SOFT SEAT.
8. HIGH POINT VENTS AND DRAINS ADDED BY CONSTRUCTION FOR FLUSH AND HYDRO.
9. VENT AND DRAIN ASSEMBLIES ARE TO BE FABRICATED AND INSTALLED IN ACCORDANCE WITH MCS-1206.00-02-0002 USING ENGINEERING SPECIFICATION MDG-ES-1A, 1B, 1C AND 1D.

Certified as of 05/28/2009 at 14:40:16
ECP ENDING

D16