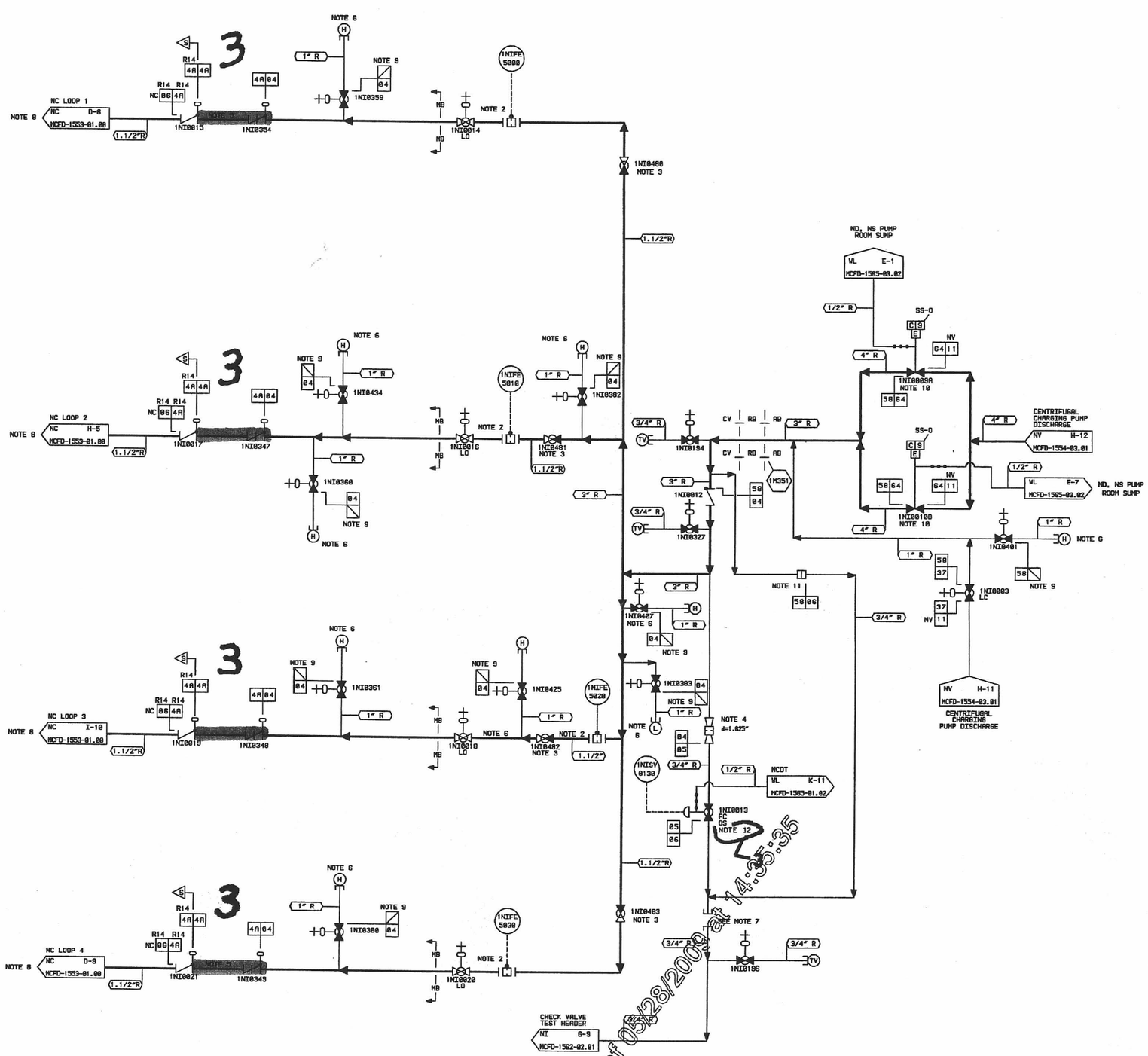

Certified as of 05/28/2009 at 14:35:35

NOTE(S)

2. FLOW METERING ORIFICE TO MEASURE FLOW DURING PERIODIC TEST AND CALIBRATION.
3. ADJUST VALVES IN FIELD TO LIMIT PUMP RUN OUT. THEN LOCK AND TACK-WELD IN POSITION.
4. 3/8 INCH ID FLOW RESTRICTION REQUIRED.
5. MINIMIZE THE LENGTH OF THIS PIPE.
6. VENTS AND DRAINS ADDED BY CONSTRUCTION DEPT. FOR FLUSH AND HYDRO.
7. A FULL BLANK COUPLING HAS BEEN INSTALLED TO PREVENT NC LEAKAGE INTO CHECK VALVE TEST HEADER.
8. LOOP 4, CONNECTION IS AT NC COLD LEG CENTERLINE. OTHER 3 LOOPS (1,2,3), CONNECTION IS AT TOP OF PIPING.
9. VENT AND DRAIN ASSEMBLIES ARE TO BE FABRICATED AND INSTALLED IN ACCORDANCE WITH MCS-1206.00-02-0002 USING ENGINEERING SPECIFICATION MDG-ES-1A, 1B, 1C AND 1D.
10. VALVES 1NI0009A AND 1NI0010B HAS A MAX STROKE TIME OF 11 SECONDS.
11. BLANK FULL COUPLING.
12. AIR AND POWER ARE ISOLATED TO MAINTAIN FAIL CLOSED POSITION. 3

DESIGN PARAMETERS

LINE LISTING	PIPE SPEC.	PRESSURE	TEMPERATURE	CLASS	MATERIAL
NC02	PS 2501.1	2485 PSIG	650 F	A	SS
NI04	PS 2501.2	2485 PSIG	650 F	B	SS
NI05	PS 2501.2	2485 PSIG	650 F	B	SS
NI06	PS 2501.4	2485 PSIG	650 F	E	SS
NI37	PS 2501.2	2735 PSIG	250 F	B	SS
NI48	PS 2501.1	2485 PSIG	650 F	A	SS
NI50	PS 2501.2	2485 PSIG	250 F	B	SS
NI64	PS 2501.2	2735 PSIG	250 F	B	SS
NV11	PS 1501.2	2735 PSIG	189 F	B	SS
WL35	TS 2701.1	50 PSIG	200 F	E	ST
WL43	TS 2701.1	100 PSIG	200 F	E	ST

S-S-S
STANDBY SHUTDOWN SYSTEM

NOTE: DRAWING MCFD-1562-01.00 REPLACES MC-1562-1.0 REV. 18

QA CONDITION 1 AND 2

NO.	REVISIONS	DRN	DATE	CHKD	DATE	APPR	DATE
3	AS-BUILT PER MGMM-13161	RDR 02-18		JRC 02-18		RDM 02-19	

INSPECTED: ARS MAB JWB; CIVIL ELEC. MECH.

DUKE POWER COMPANY
MCGUIRE NUCLEAR STATION UNIT 1

FLOW DIAGRAM OF
SAFETY INJECTION
SYSTEM (NI)

DESIGNER RW REVELS DATE 08-24-95 INSP. R FUND DATE 08-30-95
DRAWN IW WILLIAMS DATE 08-23-95 INSP. MN DICKS DATE 10-20-95
CHECKED MJ PLESO DATE 08-23-95 APPR. RA HARRIS DATE 11-02-95

SCALE DWG. NO. MCFD-1562-01.00 REV. 3

ERN: MC009084

Duke Energy Corporation
Relief Request # 09-MN-005
Attachment 2, Page 5 of 18

D05