MITSUBISHI HEAVY INDUSTRIES, LTD.
16-5, KONAN 2-CHOME, MINATO-KU
TOKYO, JAPAN

Jun 19, 2009

Document Control Desk
U.S. Nuclear Regulatory Commission
Washington, DC 20555-0001

Attention: Mr. Jeffrey A. Ciocco

Docket No. 52-021
MHI Ref: UAP-HF-09333

Subject: MHI's Responses to US-APWR DCD RAI No. 362-2278

Reference: [1] "Request for Additional Information No. 362-2278 Revision 0, SRP Section: 09.02.02 – REACOR AUXILIARY COOLING WATER SYSTEM – Design Certification and New License Applicants, Application Section: 9.2.2," dated May 13, 2009.

With this letter, Mitsubishi Heavy Industries, Ltd. ("MHI") transmits to the U.S. Nuclear Regulatory Commission ("NRC") a document entitled "Response to Request for Additional Information No. 362-2278 Revision 0".

Enclosed are the responses to questions 9.2.2-22, 23, 24, 25, 29, 30, 32, 34, 35, 36, 39, 40, 41, 42, 43 and 45 of the RAI (Reference 1). Responses to the remaining eight questions of this RAI have 60-day response times as agreed to between the NRC and MHI. The responses for these questions will be issued at a later date by a separate transmittal.

Please contact Dr. C. Keith Paulson, Senior Technical Manager, Mitsubishi Nuclear Energy Systems, Inc. if the NRC has questions concerning any aspect of the submittals. His contact information is below.

Sincerely,

Y. Ogata

Yoshiki Ogata,
General Manager- APWR Promoting Department
Mitsubishi Heavy Industries, LTD.

Enclosure:

1. Responses to Request for Additional Information No. 362-2278 Revision 0

CC: J. A. Ciocco
C. K. Paulson

D081
NRO

Contact Information

C. Keith Paulson, Senior Technical Manager
Mitsubishi Nuclear Energy Systems, Inc.
300 Oxford Drive, Suite 301
Monroeville, PA 15146
E-mail: ck_paulson@mnes-us.com
Telephone: (412) 373-6466

Enclosure 1

UAP-HF-09333
Docket No. 52-021

Responses to Request for Additional Information
No. 362-2278 Revision 0

June 2009

RESPONSE TO REQUEST FOR ADDITIONAL INFORMATION

6/19/2009

US-APWR Design Certification

Mitsubishi Heavy Industries

Docket No. 52-021

RAI NO.: **NO. 362-2278 REVISION 0**

SRP SECTION: **09.02.02 – REACTOR AUXILIARY COOLING WATER SYSTEM**

APPLICATION SECTION: **9.2.2**

DATE OF RAI ISSUE: **5/13/2009**

QUESTION NO.: 09.02.02-22

Based on a review of the information provided in Tier 2 of the Design Control Document (DCD), Section 9.2.2, "Component Cooling Water System," the staff found that the description of the component cooling water system (CCWS) is generally incomplete and does not adequately explain how design bases considerations are satisfied by the proposed design, what limiting assumptions apply, how much excess margin is available, what operating experience insights are relevant and how they were addressed, and so forth.
Consequently, Tier 1 and Tier 2 of the DCD needs to be revised to include information that is sufficient to demonstrate that the CCWS is capable of performing its design-bases functions, that applicable design considerations are satisfied by the proposed design, and that reasonable assurance exists that the availability and design-bases capability of the CCWS will be maintained over the life of the plant. Regulatory Guide 1.206, "Combined License Applications for Nuclear Power Plants (LWR Edition)," provides guidance on the specific information that should be included in the application for evaluation by the staff.

ANSWER:

As requested by NRC comments that are shown below, Tier 1 and Tier 2 of the DCD will be revised in order to improve the content.

- QUESTION NO.: 09.02.02-23
- QUESTION NO.: 09.02.02-24
- QUESTION NO.: 09.02.02-25
- QUESTION NO.: 09.02.02-29
- QUESTION NO.: 09.02.02-30
- QUESTION NO.: 09.02.02-32
- QUESTION NO.: 09.02.02-36
- QUESTION NO.: 09.02.02-39

- QUESTION NO.: 09.02.02-43
- QUESTION NO.: 09.02.02-45

Impact on DCD

Refer to the answer to RAI.362-2278 questions above.

Impact on COLA

There is no impact on the COLA.

Impact on PRA

There is no impact on the PRA.

RESPONSE TO REQUEST FOR ADDITIONAL INFORMATION

6/19/2009

US-APWR Design Certification

Mitsubishi Heavy Industries

Docket No. 52-021

RAI NO.: **NO. 362-2278 REVISION 0**

SRP SECTION: **09.02.02 – REACTOR AUXILIARY COOLING WATER SYSTEM**

APPLICATION SECTION: **9.2.2**

DATE OF RAI ISSUE: **5/13/2009**

QUESTION NO.: 09.02.02-23

The component cooling water system (CCWS) must be able to withstand natural phenomena without the loss of function in accordance with 10 CFR 50, Appendix A, General Design Criterion (GDC) 2 requirements. There are several statements made in Tier 2 of the Design Control Document (DCD), Chapter 3, Table 3.2-2, sheet 23, item 11 (CCWS) that need to be clarified and corrected which includes:

- In several cases, the system and component description needs to be clarified and should be better described with "header names" such as header A, B, C, D, A-1, C-1, A-2 or C-2.
- Table 3.2-2, item 11, sheet 24; "Component cooling water supply, return lines piping and valves excluding the following; Component cooling water system containment isolation valves and piping between the valves Component cooling water supply, return lines piping and valves between and excluding the valves NCS-VLV-033A and 034A." This statement is confusing. Clarify valves NCSVLV-033A and 034A should be equipment class 3, quality group C.
- Table 3.2-2, item 11, sheet 24; "Component cooling water supply, return lines piping and valves excluding the following; Component cooling water system containment isolation valves and piping between the valves Component cooling water supply, return lines piping and valves between and excluding the valves NCS-VLV-033B and 034B." This statement is confusing. Clarify valves NCSVLV-033B and 034B should be equipment class 3, quality group C.
- Table 3.2-2, item 11, sheet 25;"Component cooling water supply, return lines piping and valves between and excluding the valves NCS-VLV-033A and 034A, excluding the following; Component cooling water system containment isolation valves and piping between the valves Component cooling water system piping and valves between and including the valve NCS-AOV-661A and NCS-VLV-671A Component cooling water system piping and valves between and including the valve NCS-AOV-601 and NCS-VLV-653." This statement is confusing.
  Clarify valves NCS-AOV-661A and NCS-VLV-671A should be equipment class 3, quality group C.
- Table 3.2-2, item 11, sheet 25, "Component cooling water supply, return lines piping

and valves between and excluding the valves NCS-VLV-033B and 034B, excluding the following; Component cooling water system containment isolation valves and piping between the valves Component cooling water system piping and valves between and including the valve NCS-AOV-661B and NCS-VLV-671B. This statement is confusing. Clarify valves NCS-AOV-661B and NCSVLV-671B should be equipment class 3, quality group C.

- Describe in Section 9.2.2 why filters are not necessary in the design of the component cooling water system since plate type heat exchangers are being utilized. If filters are determined to be required, the filter should also be described in Tier 1.

ANSWER:

DCD Tier 2, Chapter 3, Table 3.2-2, item 11 (CCWS), sheets 23, 24 and 25 description of components and piping is confusing as noted in the RAI. All piping and valves associated with the headers A, B, C, D, A1 and C1 except the containment isolation portions are equipment class 3, quality group C. Containment isolation portions including containment isolation valves are equipment class 2, quality group B. All piping and valves associated with the headers A2 and C2 except the containment isolation portions are equipment class 4, quality group D. Containment isolation portions including containment isolation valves are equipment class 2, quality group B. DCD Tier 2, Table 3.2-2 item 11 will be revised to clarify and correct the description of the piping and components.

CCW system is a closed loop system. Deminerlized quality water with corrosion inhibitors is circulated. No outside impurities will be infiltrated in the system. Therefore, the CCW water the filters are not deemed necessary and not provided. DCD, Tier 2 Subsection 9.2.2 will be revised accordingly.

Impact on DCD

- Tier 2, DCD Subsection 9.2.2.2 will be revised as follows:

  Add the following at the end of this Subsection:

  "**Deminerlized quality water with corrosion inhibitors is circulated in the CCWS. No outside impurities are expected to be infiltrated in the system. The CCW water the filters to protect the Plate type CCW heat exchangers are not deemed necessary and not provided.**"

- Tier 2, DCD Table 3.2-2 will be revised as follows:

Table 3.2-2 Classification of Mechanical and Fluid Systems, Components, and Equipment
(Sheet 24 of 53)

System and Components	Equipment Class	Location	Quality Group	10 CFR 50 Appendix B (Reference 3.2-8)	Codes and Standards(3)	Seismic Category	Notes
Component cooling water ~~supply, return lines~~ **supply/ return headers A, B, A1 and A2** piping and valves excluding the following ; Component cooling water system containment isolation valves and piping between ~~the~~ **these** valves[1)] Component cooling water ~~supply, return lines~~ **supply/ return header A2** piping ~~and valves~~**, in** between ~~and~~ **but** excluding the valves NCS-VLV-033A and 034A[2)]	3	R/B	C	YES	3	I	**1) Component cooling water system containment isolation valves and piping between these valves are Equipment Class 2, Quality Group B, Seismic Category I.** **2) Valves NCS –VLV-033A and NCS-VLV-034A are Equipment Class 3, Quality Group C**

Table 3.2-2 Classification of Mechanical and Fluid Systems, Components, and Equipment (Sheet 24 of 53)

System and Components	Equipment Class	Location	Quality Group	10 CFR 50 Appendix B (Reference 3.2-8)	Codes and Standards(3)	Seismic Category	Notes
Component cooling water ~~supply, return lines~~ **supply/ return headers C, D, C1 and C2** piping and valves excluding the following ; Component cooling water system containment isolation valves and piping between ~~the~~ **these** valves[3)] Component cooling water ~~supply, return lines~~ **supply/ return header C2** piping ~~and valves~~**, in** between ~~and~~ **but** excluding the valves NCS-VLV-033B and 034B[4)]	3	R/B	C	YES	3	I	**3) Component cooling water system containment isolation valves and piping between these valves are Equipment Class 2, Quality Group B, Seismic Category I.** **4) Valves NCS–VLV-033B and NCS-VLV-034B are Equipment Class 3, Quality Group C**

Table 3.2-2 Classification of Mechanical and Fluid Systems, Components, and Equipment (Sheet 25 of 53)

System and Components	Equipment Class	Location	Quality Group	10 CFR 50 Appendix B (Reference 3.2-8)	Codes and Standards[3]	Seismic Category	Notes
Component cooling water ~~supply, return lines~~ **supply/ return header A2** piping and valves between the valves NCS-VLV-033A and 034A **(excluding the valves)**, excluding the following; Component cooling water system containment isolation valves and piping between ~~the~~ **these** valves[5] Component cooling water system piping and valves between ~~and including the~~ **these** valve NCS-AOV-661A and NCS-VLV-671A **(including the valves)**[6] Component cooling water system piping and valves between ~~and including the~~ **these** valve NCS-AOV-601 and NCS-VLV-653 **(including the valves)**[7]	4	R/B	D	N/A	4	II	**5) Component cooling water system containment isolation valves and piping between these valves are Equipment Class 2, Quality Group B, Seismic Category I.** **6) Valves NCS-AOV-661A and NCS-VLV-671A are Equipment Class 3, Quality Group 3, Seismic Category I.** **7) Valves NCS-AOV-601A and NCS-VLV-653 are Equipment Class 3, Quality Group 3, Seismic Category I.**

Table 3.2-2 Classification of Mechanical and Fluid Systems, Components, and Equipment
(Sheet 25 of 53)

System and Components	Equipment Class	Location	Quality Group	10 CFR 50 Appendix B (Reference 3.2-8)	Codes and Standards(3)	Seismic Category	Notes
Component cooling water ~~supply, return lines~~ **supply/ return header C2** piping and valves between the valves NCS-VLV-033B and 034B **(excluding the valves)**, excluding the following; Component cooling water system containment isolation valves and piping between ~~the~~ **these** valves[8)] Component cooling water system piping and valves between ~~and including the~~ **these** valve NCS-AOV-661B and NCS-VLV-671B **(including the valves)**[9)]	4	R/B	D	N/A	4	II	**8) Component cooling water system containment isolation valves and piping between these valves are Equipment Class 2, Quality Group B, Seismic Category I.** **9) Valves NCS-AOV-661B and NCS-VLV-671B are Equipment Class 3, Quality Group 3, Seismic Category I.**

Impact on COLA

There is no impact on the COLA.

Impact on PRA

There is no impact on the PRA.

RESPONSE TO REQUEST FOR ADDITIONAL INFORMATION

6/19/2009

US-APWR Design Certification

Mitsubishi Heavy Industries

Docket No. 52-021

RAI NO.: **NO. 362-2278 REVISION 0**

SRP SECTION: **09.02.02 – REACTOR AUXILIARY COOLING WATER SYSTEM**

APPLICATION SECTION: **9.2.2**

DATE OF RAI ISSUE: **5/13/2009**

QUESTION NO.: 09.02.02-24

The component cooling water system (CCWS) must be able to withstand natural phenomena without the loss of function in accordance with General Design Criteria (GDC) 2 requirements. As specified in Standard Review Plan (SRP), Section 9.2.2, "Reactor Auxiliary Cooling Water Systems," staff acceptance is based upon compliance with GDC 2, "Design Basis for Protection Against Natural Phenomena." The staff considers the CCWS to be acceptable with respect to GDC 2 if it satisfies Position C1 and C.2 of Regulatory Guide 1.29, "Seismic Design Classification." Position C2 indicates that the design of non-safety-related SSCs is acceptable if failures of these non-safety-related SSCs do not adversely affect the control room occupants or safetyrelated SSCs to perform their safety related function.

The applicant is request to provide additional information in Tier 2, Section 9.2.2 of the Design Control Document (DCD) to address that failures of non-safety-related portions of the CCWS do not adversely affect any safety-related SSCs in performing their safetyrelated function, or adversely affect the control room occupants.

ANSWER:

The CCW System is designed in accordance with Regulatory Guide 1.29, Position C2. The impacts of non-safety related SSC failures will not adversely affect the control room occupants or safety-related SSCs to perform their safety related function; the direct impact of a pipe break in the non-safety portion of the system can be accommodated, the CCW system's safety function will be maintained as a result of the non-safety failure, and the indirect impact of the pipe break will not impact any SSC safety function.

All non-safety related components are supplied from two non-safety CCW headers A2 and C2, refer to DCD Table 9.2.2-1. None of the non-safety related CCW components are necessary for maintaining the integrity of the RCS, needed to shutdown the reactor or maintain it shutdown, nor prevent or mitigate the consequences of an accident.

Each non-safety CCW header can be isolated by the motor operated valves. Motor operated valves MOV-020A, MOV-020B, MOV-020C, MOV-020D on supply side are located upstream of the manual valves (VLV-033A, VLV-033B). MOV-007A, MOV-007B, MOV-007C, MOV-007D on return side of these headers are located on downstream of the manual valves (VLV-034A, VLV-034B). Should a seismic event occur that causes a break in a non-safety header, operators will receive control room alarms for the surge tank low level and respond to

the event by closing the applicable valves.

DCD Tier 2 Section 9.2.2 will be revised to describe the impact of the failure of the non-safety related portions of the CCWS.

Impact on DCD

- Tier 2, DCD Subsection 9.2.2.2 will be revised as follows:

  Add the following at the end of this Subsection:

  "**The impacts of non-safety related SSC failures in the CCW System will not adversely affect safety-related SSCs to perform their safety related function since the direct impact of a pipe break in the non-safety portion of the system can be accommodated. The CCW system's safety function will be maintained as a result of the non-safety related piping failure, and the indirect impact of the pipe break will not impact any SSC safety function.** "

Impact on COLA

There is no impact on the COLA.

Impact on PRA

There is no impact on the PRA.

RESPONSE TO REQUEST FOR ADDITIONAL INFORMATION

6/19/2009

US-APWR Design Certification

Mitsubishi Heavy Industries

Docket No. 52-021

RAI NO.: **NO. 362-2278 REVISION 0**

SRP SECTION: **09.02.02 – REACTOR AUXILIARY COOLING WATER SYSTEM**

APPLICATION SECTION: **9.2.2**

DATE OF RAI ISSUE: **5/13/2009**

QUESTION NO.: 09.02.02-25

The component cooling water system (CCWS) must be able to withstand natural phenomena without the loss of function in accordance with General Design Criteria (GDC) 2 requirements. The system description does not explain the functioning and maximum allowed combined seat leakage of safety-related boundary isolation valves to ensure CCWS integrity and operability during seismic events and other natural phenomena. Consequently, the applicant needs to include the following information in Tier 2 Section 9.2.2 of the Design Control Document (DCD):

- Describe in the DCD how CCWS integrity and operability is assured by the safetyrelated boundary isolation valves so that common-cause simultaneous failure of all non-safety-related CCWS piping will not compromise the CCWS safety functions during seismic events.
- Describe in the DCD what the maximum allowed combined seat leakage is for the safety-related CCWS boundary isolation valves and periodic testing that will be performed to ensure that the specified limit will not be exceeded.
- Describe in the DCD any other performance assumptions that pertain to the boundary isolation valves or other parts of the system that is necessary to assure the capability of the CCWS to perform its safety functions during natural phenomena.

ANSWER:

- Question 1

  Describe in the DCD how CCWS integrity and operability is assured by the safetyrelated boundary isolation valves so that common-cause simultaneous failure of all non-safety-related CCWS piping will not compromise the CCWS safety functions during seismic events.

- Answer 1

  DCD Tier 2 Section 9.2.2.3.2 will be revised to include a functional description regarding the isolation during seismic events reflecting the NRC comments. These valves are also described in section 9.2.2.2.1.5

- Question 2

  Describe in the DCD what the maximum allowed combined seat leakage is for the safety-related CCWS boundary isolation valves and periodic testing that will be performed to ensure that the specified limit will not be exceeded.

- Answer 2

  Potential seat leakage following valve closure is accounted for by the Component cooling Water Surge Tank and makeup from the Seismic Category I Refueling Water Storage Pit. As described in DCD Tier 2 Section 3.9.6. and Table 3.9-14, In-Service seat leakage testing is not required for these valves.

- Question 3

  Describe in the DCD any other performance assumptions that pertain to the boundary isolation valves or other parts of the system that is necessary to assure the capability of the CCWS to perform its safety functions during natural phenomena.

- Answer 3

  In DCD Tier 2 Section 9.2.2.2.1.5 the isolation valves necessary for the CCWS to perform its safety function are described. Inaddition to the automatic closure of the isolation valves in the non seismic supply lines, the availability of seismically qualified makeup water to account for leakage is assumed. Section 9.2.2.3.2 will be revised to identify the Refueling Water Storage Pit as a Seismic Category I source.

Impact on DCD

- The description below will be added to DCD Tier 2 Section 9.2.2.3.2

  "**In the event of a loss of system integrity in the non-seismic portion of the system, the CCWS is designed to maintain functionality by closing both header tie line isolation valves and the isolation valves in the supply lines to the non-seismic category I buildings. Automatic closure is activated upon the surge tank low-low water level signal. Seismic Category I make up to the Component Cooling Surge Tank is available from the Refueling Water Storage Pit.**"

Impact on COLA

There is no impact on the COLA.

Impact on PRA

There is no impact on the PRA.

RESPONSE TO REQUEST FOR ADDITIONAL INFORMATION

6/19/2009

US-APWR Design Certification

Mitsubishi Heavy Industries

Docket No. 52-021

RAI NO.: **NO. 362-2278 REVISION 0**

SRP SECTION: **09.02.02 – REACTOR AUXILIARY COOLING WATER SYSTEM**

APPLICATION SECTION: **9.2.2**

DATE OF RAI ISSUE: **5/13/2009**

QUESTION NO.: 09.02.02-29

The component cooling water system (CCWS) must be capable of removing heat from systems, structures and components (SSCs) important to safety during normal operating and accident conditions over the life of the plant in accordance with General Design Criterion (GDC) 44 requirements. The Design Control Document (DCD) system description does not adequately explain the basis for sizing the CCWS pumps.

Considerations that need to be addressed include head losses in the cooling water inlet piping based on full power flow conditions, fluctuations in the supplied electrical frequency, increased pipe roughness due to aging and fouling, fouled filters (if added), maximum pressure drop through the system heat exchangers, and the actual amount of excess margin that is provided by the CCWS pump design including the basis for this determination.

In order for the staff to confirm that the CCWS pumps have been adequately sized, the applicant needs to include additional information in Tier 2, DCD Section 9.2.2 to address these considerations.

ANSWER:

As requested by NRC, DCD Tier 2 will be revised to include additional information to adequately size of the CCWS pumps.

Impact on DCD

- The description below will be added to DCD Tier 2 Section 9.2.2.2.1.2.

  "**The pump is designed in consideration of head losses in the cooling water inlet piping based on full power flow conditions, increased pipe roughness, maximum pressure drop through the system heat exchangers, and the actual amount of excess margin etc.**"

Impact on COLA

There is no impact on the COLA.

Impact on PRA

There is no impact on the PRA.

RESPONSE TO REQUEST FOR ADDITIONAL INFORMATION

6/19/2009

US-APWR Design Certification

Mitsubishi Heavy Industries

Docket No. 52-021

RAI NO.: **NO. 362-2278 REVISION 0**

SRP SECTION: **09.02.02 – REACTOR AUXILIARY COOLING WATER SYSTEM**

APPLICATION SECTION: **9.2.2**

DATE OF RAI ISSUE: **5/13/2009**

QUESTION NO.: 09.02.02-30

General Design Criterion (GDC) 44 provides requirements for the transfer of heat from systems, structures and components (SSCs) important to safety to a heat sink during both normal and accident conditions assuming a single failure. Both accident and normal component cooling water system (CCWS) heat exchanger (HX) heat loads are not provided in the Design Control Document (DCD). Additional information is needed with respect to component heat load and flow requirements (both safety and non-safety) that are assumed to be in service during these conditions. As specified in Standard Review Plan (SRP) Section 9.2.2, this information is needed in order for the staff to determine whether minimum system/equipment heat transfer and flow demands are specified and can be met. Therefore, the DCD needs to be revised, as appropriate, to address the following considerations:

- Provide in the DCD key assumptions and conclusions in DCD Section 9.2.2 for calculations related to component cooling water system (CCWS) flow and heat load calculations that demonstrate adequacy of the selected pump capacity (including normal degradation) to provide the minimum required flow plus margin to system users during various possible operating/accident alignments. The DCD should also include the necessary flow rates and heat loads for all safetyrelated and major components cooled by CCWS. These calculations should be made available for staff audit.
- Provide in the DCD key assumptions and conclusions in DCD Section 9.2.2 for calculations related to the CCW HX normal and accident heat loads. These calculations should be made available for staff audit.
- Explain in the DCD how the minimum required CCWS flow to the CCWS heat exchanger (HX) was determined for meeting the system required heat loads.
- Describe in the DCD the minimum flow that is needed for all important system loads. Examples of other important loads include (for example): (1) safety injection pumps, coolers and motors, (2) containment spray and residual heat exchangers (3) CCWS pump motor coolers, (4) charging pumps, coolers and motors, (5) spent fuel pit heat exchangers, and (6) reactor coolant pump (RCP) motor, thermal barrier, and bearing coolers.

- Describe the bases of the normally closed containment spray heat exchanger outlet valve which gets an automatic open signal on safety injection or CCWS pump start.

ANSWER:

- Question 1

  Provide in the DCD key assumptions and conclusions in DCD Section 9.2.2 for calculations related to component cooling water system (CCWS) flow and heat load calculations that demonstrate adequacy of the selected pump capacity (including normal degradation) to provide the minimum required flow plus margin to system users during various possible operating/accident alignments. The DCD should also include the necessary flow rates and heat loads for all safetyrelated and major components cooled by CCWS. These calculations should be made available for staff audit.

- Answer 1

  Component Cooling Water system heat transfer and flow requirements for normal plant operation, shutdown, and accident conditions will be provided in Tier 2 DCD Table 9.2.2-4.

- Question 2

  Provide in the DCD key assumptions and conclusions in DCD Section 9.2.2 for calculations related to the CCW HX normal and accident heat loads. These calculations should be made available for staff audit.

- Answer 2

  The heat transfer rate of the CCW HX is specified such that heat load at the normal operation can be removed by two units of the heat exchangers. This can be identified by the heat transfer rate of the CCW HX in Table 9.2.2-2, and by the table for the heat load added at Bullet 1.
  Regarding the case of an accident, it is verified that the heat load at an accident can be removed by two units of the CCW HXs. (for more detail, refer to the DCD Tier 2 Section 15.6.) Also, regarding the case of safe shutdown, it is verified that the heat can be removed by two units of CCW HXs in addition to the CS/RHR HXs. (for more detail, refer to the DCD Tier 2 Section5.4.7.3.)
  From the reasons above, no changes are considered necessary to the present description.

- Question 3

  Explain in the DCD how the minimum required CCWS flow to the CCWS heat exchanger (HX) was determined for meeting the system required heat loads.

- Answer 3

  Refer to the above answer 1.

- Question 4

  Describe in the DCD the minimum flow that is needed for all important system loads. Examples of other important loads include (for example): (1) safety injection pumps, coolers and motors, (2) containment spray and residual heat exchangers (3) CCWS pump motor coolers, (4) charging pumps, coolers and motors, (5) spent fuel pit heat exchangers, and (6) reactor coolant pump (RCP) motor, thermal barrier, and bearing

coolers.

- Answer 4

  Flow rates for components that are shown in Table 9.2.2.1 are described in the sections shown in the table.
  Pump motor cooling flow rates depend on vendor specifications; enough margin is included for possible flow rate variations.

- Question 5

  Describe the bases of the normally closed containment spray heat exchanger outlet valve which gets an automatic open signal on safety injection or CCWS pump start.

- Answer 5

  DCD Tier 2 Section9.2.2.2.1.5 will be revised to include the explanation of CS/RHR Hx outlet valve reflecting the NRC comments.

Impact on DCD

• Tier 2 DCD Subsection 9.2.2.2.2 will be revised to add the following in the beginning of this subsection:

"**Table 9.2.2-4 and 9.2.2-5, respectively, provide heat loads and water flow balance for various operating modes.**"

• Table 9.2.2-4 and Table 9.2.2-5 are found in the next two pages.

• DCD Subsection 9.2.2.2.1.5 (Heading: Containment Spray/Residual Heat Removal Heat Exchanger (CS/RHRS HX) CCW Outlet Valve) will be revised to incorporate the following:

The component cooling water which is supplied to the CS/RHR heat exchanger is shutoff by the CCW outlet isolation valve during standby. However, this normal closed motor operated valve automatically opens upon ECCS actuation signal plus the respective train CCW pump start signal to establish cooling water flow to the CS/RHR heat exchanger.

Impact on COLA

There is no impact on the COLA.

Impact on PRA

There is no impact on the PRA.

Table 9.2.2-4 Component Cooling Water system Heat Load

Unit of Heat Load [$\times 10^6$Btu/hr]

Train	Normal Power Operation	Cooldown by CS/RHRS	Accident	Safe Shutdown
A & B	0.2	181.8	138.7	167.9
A1	25.6	14.3	23.0	23.0
A2	24.2	24.2	0.0	0.0
Subtotal	50.0	220.3	161.7	190.9
C & D	0.2	181.8	138.7	167.9
C1	25.6	14.3	23.0	23.0
C2	15.5	25.1	0.0	0.0
Subtotal	41.3	221.2	161.7	190.9
The total number of operating CCW HXs	2	4	2	2

Table 9.2.2-5 Component Cooling Water system Flow Balance

Unit of Flow Rate [gpm]

Train	Normal Power Operation	Cooldown by CS/RHRS	Accident	Safe Shutdown
A & B	600	9400	4700	4700
A1	4575	4575	4575	4575
A2	1948	1948	310	310
Subtotal	7123	15923	9585	9585
C & D	600	9400	4700	4700
C1	4575	4575	4592	4575
C2	925	1490	0.0	0.0
Subtotal	6100	15465	9292	9275
The total number of operating CCW pumps	2	4	2	2

RESPONSE TO REQUEST FOR ADDITIONAL INFORMATION

6/19/2009

US-APWR Design Certification

Mitsubishi Heavy Industries

Docket No. 52-021

RAI NO.: **NO. 362-2278 REVISION 0**

SRP SECTION: **09.02.02 – REACTOR AUXILIARY COOLING WATER SYSTEM**

APPLICATION SECTION: **9.2.2**

DATE OF RAI ISSUE: **5/13/2009**

QUESTION NO.: 09.02.02-32

The component cooling water system (CCWS) must be capable of removing heat from systems, structures and components (SSCs) important-to-safety during normal operating and accident conditions over the life of the plant in accordance with General Design Criteria (GDC) 44, which includes single-failure criteria. The staff found that normally locked closed (LC) motor operated cross-tie valves (NCS-MOV-232A/B and NCS-MOV-233A/B) between common headers A-1 and C-1 are not described in the text of Tier 2, DCD Section 9.2.2. The bases for this piping design arrangement, main control room controls for the valves, or the conditions for when these cross tie valves would be opened is not described in the DCD. In addition, a failure modes and effects analysis is not described related to this cross tie arrangement. The DCD needs to be revised to include this information.

ANSWER:

As requested by NRC, DCD Tier 2 will be revised to include a description of the the operation of the cross-tie line between headers A-1 and C-1.

Impact on DCD

- The description below will be added to DCD Tier 2 Section 9.2.2.2.1.5.

  - **RCP Thermal Barrier HX CCW Return Line Isolation valve**

    These Valves function to supply cooling water to the RCPs of header A-1 (or C-1) in the event cooling is lost due to a single failure during on-line maintenance of a CCW pump. The cooling water for the thermal barrier is ensured by opening NCS-MOV-232A/B and NCS-MOV-233A/B, and closing NCS-MOV-234A (or 234B).

Impact on COLA

There is no impact on the COLA.

Impact on PRA

There is no impact on the PRA.

RESPONSE TO REQUEST FOR ADDITIONAL INFORMATION

6/19/2009

US-APWR Design Certification

Mitsubishi Heavy Industries

Docket No. 52-021

RAI NO.: **NO. 362-2278 REVISION 0**

SRP SECTION: **09.02.02 – REACTOR AUXILIARY COOLING WATER SYSTEM**

APPLICATION SECTION: **9.2.2**

DATE OF RAI ISSUE: **5/13/2009**

QUESTION NO.: 09.02.02-34

The component cooling water system (CCWS) must be capable of removing heat from systems, structures and components (SSCs) important to safety during normal operating and accident conditions over the life of the plant in accordance with General Design Criteria (GDC) 44 requirements. The component cooling water system (CCWS) provides essential cooling to the reactor coolant pumps (RCP) thermal barrier. Potential thermal barrier leakage is a concern with such a large pressure differential between the reactor coolant system (RCS) and CCWS. Accordingly, Design Control Document (DCD) Tier 2, Section 9.2.2 should be revised to address the following concerns:

1. As stated in Tier 2, DCD Section 9.2.2.5.5, a high flow alarm, resulting from the inleakage of reactor coolant to CCWS due to the reactor coolant pump thermal barrier HX tube leak, is transmitted to the MCR and the isolation valves located at cooling water return line are closed. Describe in detail any instrumentation and controls (I&C) logic/permissive and setpoints for automatic isolation of the thermal barrier CCWS coolant.
2. There is no specific Tier 2, DCD Section 9.2.2 discussion related to the potential RCS dilution from a thermal barrier tube rupture with the reactor coolant system at pressures below CCWS pressures.
3. There is no specific Tier 2, DCD Section 9.2.2 discussion related to the CCWS smaller bypass lines (4") around the main containment isolation (8") valves for the reactor coolant pumps (penetrations P234, P249, P232, P251). As stated in Table 6.2.4-3, the smaller 4" valves are opened post accident but these valves do not receive accident isolation signals. State the bases in Tier 2, DCD Section 9.2.2 for the smaller CCWS lines for coolant to the reactor coolant pumps.

ANSWER:

- Question 1

  As stated in Tier 2, DCD Section 9.2.2.5.5, a high flow alarm, resulting from the inleakage of reactor coolant to CCWS due to the reactor coolant pump thermal barrier HX tube leak, is transmitted to the MCR and the isolation valves located at cooling water return line are closed. Describe in detail any instrumentation and

controls (I&C) logic/permissive and setpoints for automatic isolation of the thermal barrier CCWS coolant.

- Answer 1

  Reflecting the NRC comment, DCD Tier 2 Section 9.2.2.5.5 will be revised to include the description regarding the setpoint for the RCP thermal barrier isolation. Also, the logic that describes the valve closure upon the receipt of high flow alarm, is described at Section 9.2.2.5.5.

- Question 2

  There is no specific Tier 2, DCD Section 9.2.2 discussion related to the potential RCS dilution from a thermal barrier tube rupture with the reactor coolant system at pressures below CCWS pressures.

- Answer 2

  The inleakage of the component cooling water occurs when the RCS pressure falls below the CCWS pressure. The RCS pressure falls below the CCWS pressure only at plant shutdown, and the load which is so large as to cause damage to the thermal barrier is unlikely to be applied because the RCS side is low temperature/low pressure. For these reasons, it is considered that there is a very low potential for the occurrence of the inleakage of the component cooling water to the RCS.

- Question 3

  There is no specific Tier 2, DCD Section 9.2.2 discussion related to the CCWS smaller bypass lines (4") around the main containment isolation (8") valves for the reactor coolant pumps (penetrations P234, P249, P232, P251). As stated in Table 6.2.4-3, the smaller 4" valves are opened post accident but these valves do not receive accident isolation signals. State the bases in Tier 2, DCD Section 9.2.2 for the smaller CCWS lines for coolant to the reactor coolant pumps.

- Answer 3

  Reflecting the NRC comment, DCD Tier 2 Section 9.2.2 will be revised to include the description of the component cooling water supply line isolation valve bypass line.

Impact on DCD

- The following will be added to DCD Tier 2 Section 9.2.2.5.5

  "• • • A high flow alarm, resulting from the in-leakage of reactor coolant to CCWS due to the reactor coolant pump thermal barrier HX tube leak, is transmitted to the MCR **when the flow rate becomes about 1.5 times as large as the normal flow rate,** and the isolation valves located at cooling water return line are closed."

- The following will be added to DCD Tier 2 Section 9.2.2.3.5

  "To re-supply water to the thermal barrier after the isolation of the containment vessel during an accident, the cooling water for the thermal barrier is ensured by opening NCS-MOV-445A/B, NCS-MOV-447A/B, and NCS-MOV-448A/B.

Impact on COLA

There is no impact on the COLA.

Impact on PRA

There is no impact on the PRA.

RESPONSE TO REQUEST FOR ADDITIONAL INFORMATION

6/19/2009

US-APWR Design Certification

Mitsubishi Heavy Industries

Docket No. 52-021

RAI NO.: **NO. 362-2278 REVISION 0**

SRP SECTION: **09.02.02 – REACTOR AUXILIARY COOLING WATER SYSTEM**

APPLICATION SECTION: **9.2.2**

DATE OF RAI ISSUE: **5/13/2009**

QUESTION NO.: 09.02.02-35

Standard Review Plan (SRP) 9.2.2 Section II entitled, "Acceptance Criteria," requirement 4.G states as follows:
"Demonstration by testing that RCPs withstand a complete loss of cooling water for 20 minutes and instrumentation in accordance with Institute of Electrical and Electronics Engineers Standard (IEEE Std) 603, as endorsed by RG 1.153 with control room alarms detecting loss of cooling water so a period of 20 minutes is available for the operator to have sufficient time to initiate manual protection of the plant. Alternatively, if it is not demonstrated by the necessary pump testing that the RCPs will operate for 20 minutes without operator corrective action, then the following requirements apply:

- Instrumentation in accordance with IEEE Std 603, as endorsed by RG 1.153 consistent with the criteria for the protection system to initiate automatic protection of the plant upon loss of cooling water to a pump. For this case, the component cooling water supply to the seal and bearing of the pump may be designed to nonseismic Category I requirements and Quality Group D; or
- The component cooling water supply to each pump is designed to withstand a single, active failure or a moderate-energy line crack as defined in Branch Technical Position ASB 3-1 and to seismic Category I, Quality Group C, and American Society of Mechanical Engineers (ASME) Section III Class 3 requirements."

Revise Tier 2, DCD Section 9.2.2 to describe how the above item has been addressed by the US-APWR design.

ANSWER:

Including the supply lines to the RCPs, the lines which supply cooling water to the safety related SSCs in the CCWS are designed to withstand the high energy line break (HELB) that is defined in BTP ASB 3-1, and to the requirements of seismic Category I, Quality Group C,

and ASME Section III Class 3, as required by GDC 44. (Refer to DCD Section 9.2.2.1)
As they are designed in conformance with GDC 44 and it is described in DCD Section 9.2.2.1, no revision to the DCD is considered necessary.

Impact on DCD

There is no impact on the DCD.

Impact on COLA

There is no impact on the COLA.

Impact on PRA

There is no impact on the PRA.

RESPONSE TO REQUEST FOR ADDITIONAL INFORMATION

6/19/2009

US-APWR Design Certification

Mitsubishi Heavy Industries

Docket No. 52-021

RAI NO.: **NO. 362-2278 REVISION 0**

SRP SECTION: **09.02.02 – REACTOR AUXILIARY COOLING WATER SYSTEM**

APPLICATION SECTION: **9.2.2**

DATE OF RAI ISSUE: **5/13/2009**

QUESTION NO.: 09.02.02-36

The component cooling water system (CCWS) must be capable of removing heat from systems, structures and components (SSCs) important to safety during normal operating and accident conditions over the life of the plant in accordance with General Design Criteria (GDC) 44 requirements. The staff reviewed DCD, Tier 1 Table 2.7.3.3-4 and had noted twenty-seven (27) control functions related to the CCWS. In addition, Tier 2, DCD Section 9.2.2.5, "Instrumentation Requirements," includes discussions on the following: CCW supply header pressure, CCW radiation monitor, CCW supply header flow rate, CCW surge tank water level, RCP thermal barrier HX and RCP motor cooling water flow rate, CCW surge tank pressure, CCWP discharge and suction pressure, and CCW supply temperature.
Based on the staff's review of the Tier 1 and Tier 2 sections, the staff has concluded that additional detail is needed in the DCD. Items listed in DCD, Tier 1 Table 2.7.3.3-4, under the heading of "control functions," are not described in details in DCD, Tier 2 Section 9.2.2.5. Also, some items are identified in Tier 2 and not in Tier 1, such as radiation valve isolation. For example:

- For the component cooling water pumps, low system pressure starts the standby pump. Describe in the DCD which pumps are interlocked together for this function and describe the flow rate setpoints, power supplies and logic.
- In regards to CCWS header-tie line (suction and discharge) isolation, describe in the DCD which valves are interlocked together for this function and describe the setpoints, power supplies and logic.
- In regards to the CCWS containment spray heat exchanger, describe in the DCD which valves are interlocked together for this function and describe the setpoints, power supplies and logic.
- In regards to the reactor coolant pumps/motors, CCWS isolation valves, and containment isolation valves, describe in the DCD which valves are interlocked together for this function and describe the power supplies, setpoints and logic.
- In regards to the letdown and excess letdown, CCWS isolation valves, and containment isolation valves, describe in the DCD which valves are interlocked

together for this function and describe the power supplies, setpoints and logic.

- For the CCWS isolation valves in the auxiliary building and turbine building, describe in the DCD which valves are interlocked together for this function and describe the power supplies, setpoints and logic.
- In regards to the reactor coolant pumps thermal barrier CCWS isolation valves, describe in the DCD which valves are interlocked together for this function and describe the power supplies, setpoints and logic.
- In regards to the CCWS surge tanks, level, and pressure, describe in the DCD which valves are interlocked together for this function and describe the power supplies, setpoints and logic.
- In regards to the CCWS radiation monitors, describe in the DCD which valves are interlocked together for this function and describe the power supplies, setpoints and logic.
- Describe in the DCD any time delays related to a CCWS pump automatic start signal (such as safety injection signals), containment spray heat exchanger discharge valve opening times, and sub-train header valve isolation timing.

ANSWER:
Reflecting the NRC comment, DCD Tier 2 Section 9.2.2.2.1.5 will be revised to include the description of the valves that are described in Tier 1 Table 2.7.3.3-4 and not in Tier 2.

Items listed in DCD, Tier 1 Table 2.7.3.3-4, under the heading of "control functions", are described in DCD, Tier 2 Section 9.2.2.2 and 9.2.2.5. Therefore MHI thinks additional descriptions are not necessary.
In addition, refer to the answer to RAI.362-2278 question 09.02.02-42 regarding the responses to the radiation monitors.

Impact on DCD

- The following will be added to Tier 2, DCD Section 9.2.2.2.1.5
  - **RCP CCW tie line isolation valve**
    This normally closed motor operated valve opens when it becomes impossible to supply cooling water to the RCP of A1 (or C1) header due to the single failure of the CCW pump and on-line maintenance, and ensures the thermal barrier cooling water.

  - **RCP motor CCW supply line isolation valve**
    This normally open motor operated valve closes when it becomes impossible to supply cooling water to the RCP of A1 (or C1) header due to the single failure of the CCW pump and on-line maintenance, and ensures the thermal barrier cooling water.

  - **RCP CCW supply line isolation valve**
    This normally open motor operated valve closes automatically upon P signal to shutoff the component cooling water flow to the containment vessel.

  - **RCP CCW return line isolation valve**

This normally open motor operated valve closes to establish the return line of the thermal barrier cooling water in the case it becomes impossible to supply cooling water to the RCP of A1 (or C1) header due to the single failure of the CCW pump and on-line maintenance.

• DCD Subsection 9.2.2.2.2.4 will be revised to incorporate the following:

"All CCWP are automatically actuated by ECCS actuation signal. **The signal to pump is setting up delay time. (Refer to Figure 8.3.1-2 Logic diagrams (Sheet 18 of 24))** The isolation valves for the CS/RHR HXs are automatically opened by the ECCS actuation signal and the same train CCWP start signal."

• DCD Subsection 9.2.2.2.1.5 (Heading: Containment Spray/Residual Heat Removal Heat Exchanger (CS/RHRS HX) CCW Outlet Valve) will be revised to incorporate the following:

"This normal closed motor operated valve automatically opens **at once** upon ECCS actuation signal plus the respective train CCW pump start signal to establish cooling water flow to the CS/RHR heat exchanger."

• DCD Subsection 9.2.2.2.1.5 (Heading: Header tie line isolation valve) will be revised to incorporate the following:

"This valve automatically closes **at once** upon the following signals,:"

Impact on COLA

There is no impact on the COLA.

Impact on PRA

There is no impact on the PRA.

RESPONSE TO REQUEST FOR ADDITIONAL INFORMATION

6/19/2009

US-APWR Design Certification

Mitsubishi Heavy Industries

Docket No. 52-021

RAI NO.: **NO. 362-2278 REVISION 0**

SRP SECTION: **09.02.02 – REACTOR AUXILIARY COOLING WATER SYSTEM**

APPLICATION SECTION: **9.2.2**

DATE OF RAI ISSUE: **5/13/2009**

QUESTION NO.: 09.02.02-39

The component cooling water system (CCWS) must be capable of removing heat from systems, structures and components (SSCs) important to safety during normal operating and accident conditions over the life of the plant in accordance with General Design Criteria (GDC) 44 requirements. As described in Tier 2, DCD Section 9.2.2.5.4, "CCW Surge Tank Water Level", a "low-low water level signal isolates the components located in the non-seismic category I buildings." CCWS supplies two instrument air systems from header A-2 and header C-2 and also supplies miscellaneous equipment and other systems from header A-2 such as waste gas, waste dryers, chemical drain, auxiliary steam and boric acid evaporator which are designed as nonseismic and non-safety. For the required separation, two air-operated isolation valves are designed in series for the CCW supplies with a pair of check valves in series located on the return line for components located in the non-seismic Category I buildings (i.e. the turbine building (T/B) and auxiliary building (A/B)). Based on the staff's review of Tier 2, DCD Figure 9.2.2-1, the P&IDs identified other signals (such as safety injection signals) that generate a closure signal for this isolation function; however, this function or logic is not explicitly described in Tier 2, DCD Section 9.2.2.5. The DCD should be revised to describe all the actuation signals for seismic to non-seismic boundary interface, including the logic and power supplies available.

ANSWER:

MHI agrees with the NRC staff's comments with regard to the description of all actuation signals for seismic to non-seismic boundary interface, including the logic and power supplies available in order to isolate the components located in the non-seismic category I buildings.
DCD Subsection 9.2.2.2.1.5, Valves (Heading: Isolation valve between seismic Category I and non-seismic Category I portion) will be revised to describe all the actuation signals for seismic to non-seismic boundary interface, as shown in DCD Figure 9.2.2-1, including the logic and power supplies available.

Impact on DCD

DCD Subsection 9.2.2.2.1.5 (Heading: Isolation valve between seismic Category I and non-seismic Category I portion) will be revised to incorporate the following:

- The first sentence will be revised as follows:

  Two air-operated isolation valves are provided in series on each CCW supply line Isolation valves are provided on each CCW supply line **(A2 and C2)** to the components located in the non-seismic category I buildings (turbine building (T/B) and **auxiliary building (**A/B**)**). These valves close to protect against CCW seismic category I out-leakage through the non-seismic category I portions by automatic closure upon the demand signals ~~(See Figure 9.2.2-1)~~.

- The second sentence will be revised as follows:

  CCW out-leakage through the non-seismic CCW return lines **(A2 and C2)** is prevented by check valves in ~~the return lines~~ **series located on the return line for components located in the non-seismic Category I buildings (i.e. the turbine building (T/B) and auxiliary building (A/B)) (See Figure 9.2.2-1, Sheet 9 of 9).**.

- The description below will be added as the third sentence:

  "**The CCW supply header (A2 and C2) isolation valves close automatically when one of the following occurs (See Figure 9.2.2-1, Sheet 9 of 9).** "

  a) The isolation valves on auxiliary building supply line

  - **Low- low water level signal of the component cooling water surge tank**
  - **ECCS actuation signal**
  - **Containment spray signal**

  b) The isolation valves on turbine building supply line

  - **Low- low water level signal of the component cooling water surge tank**
  - **ECCS actuation signal and under voltage signal**
  - **Containment spray signal**

Impact on COLA

There is no impact on the COLA.

Impact on PRA

There is no impact on the PRA.

RESPONSE TO REQUEST FOR ADDITIONAL INFORMATION

6/19/2009

US-APWR Design Certification

Mitsubishi Heavy Industries

Docket No. 52-021

RAI NO.: **NO. 362-2278 REVISION 0**

SRP SECTION: **09.02.02 – REACTOR AUXILIARY COOLING WATER SYSTEM**

APPLICATION SECTION: **9.2.2**

DATE OF RAI ISSUE: **5/13/2009**

QUESTION NO.: 09.02.02-40

The component cooling water system (CCWS) must be designed so that periodic inspections of piping and components can be performed to assure that the integrity and capability of the system will be maintained over time in accordance with General Design Criteria (GDC) 45 requirements. The staff finds the design to be acceptable if the Design Control Document (DCD) describes inspection program requirements that will be implemented and are considered to be adequate for this purpose. While Tier 2, DCD Section 9.2.2.4.2 indicates that periodic inspections will be performed on the pumps and heat exchangers, the extent and nature of these inspections and procedural controls that will be implemented to assure that the CCWS is adequately maintained over time were not described. Consequently, the applicant needs to provide additional information in the DCD to describe the extent and nature of inspections that will be performed and procedural controls that will be implemented commensurate with GDC 45 requirements. In addition, how valves which are shown in Figure 9.2.2-1 of the DCD as "lock-closed" will be inspected needs to be addressed.

ANSWER:

With regards to periodic inspections and testing, in DCD Section 3.9.6, Section 6.2.4, and Section 6.6, the nature of the inspections and testing, and components subject to them are described, and they are considered to satisfy the requirements of GDC 45 and 46.
Also, with regards to the "lock-closed" valves, the same inspections and testing for the other valves described in DCD Section 3.9.6, Section 6.2.4, and Section 6.6 are performed instead of other inspections and testing.
From the above reasons, revisions to the description of the DCD are considered unnecessary.

Impact on DCD

There is no impact on the DCD.

Impact on COLA

There is no impact on the COLA.

Impact on PRA

There is no impact on the PRA.

RESPONSE TO REQUEST FOR ADDITIONAL INFORMATION

6/19/2009

US-APWR Design Certification

Mitsubishi Heavy Industries

Docket No. 52-021

RAI NO.: **NO. 362-2278 REVISION 0**

SRP SECTION: **09.02.02 – REACTOR AUXILIARY COOLING WATER SYSTEM**

APPLICATION SECTION: **9.2.2**

DATE OF RAI ISSUE: **5/13/2009**

QUESTION NO.: 09.02.02-41

The component cooling water system (CCWS) must be designed so that periodic pressure and functional testing of components can be performed in accordance with General Design Criteria (GDC) 46 requirements to assure the structural and leak tight integrity of system components, the operability and performance of active components, and the operability of the system as a whole and performance of the full operational sequences that are necessary for accomplishing the CCWS safety functions. The staff finds the design to be acceptable if the Design Control Document (DCD) describes pressure and functional test programs that will be implemented are considered by the staff to be adequate for this purpose. While Tier 2, DCD Section 9.2.2.4.2 indicates that periodic testing will be performed, the extent and nature of these tests and procedural controls that will be implemented to assure continued CCWS structural and leak tight integrity and system operability over time were not described. Consequently, the applicant needs to provide additional information in the DCD to describe the extent and nature of testing that will be performed and procedural controls that will be implemented commensurate with GDC 46 requirements. In addition, how valves which are shown in Figure 9.2.2-1 of the DCD as "lock-closed" will be tested needs to be addressed.

ANSWER:

Refer to the answer to RAI.362-2278 question 09.02.02-40.

Impact on DCD

There is no impact on the DCD.

Impact on COLA

There is no impact on the COLA.

Impact on PRA

There is no impact on the PRA.

RESPONSE TO REQUEST FOR ADDITIONAL INFORMATION

6/19/2009

US-APWR Design Certification

Mitsubishi Heavy Industries

Docket No. 52-021

RAI NO.: **NO. 362-2278 REVISION 0**

SRP SECTION: **09.02.02 – REACTOR AUXILIARY COOLING WATER SYSTEM**

APPLICATION SECTION: **9.2.2**

DATE OF RAI ISSUE: **5/13/2009**

QUESTION NO.: 09.02.02-42

Regulatory Guide (RG) 1.21 "Measuring, Evaluation and Reporting Radioactivity in Solid Wastes and Releases of Radioactive Materials in Liquids and Gaseous Effluents from Light-Water-Cooled Nuclear Power Plants" indicates that monitoring should be included for anticipated operational occurrences. Standard Review Plan (SRP) Section 9.2.2, Areas for Review, Section I.10 specifies review of the means provided for detecting leakage of radioactivity from one system to another and for precluding its release to the environment. The staff noted that component cooling water system (CCWS) radiation monitors were discussed in Tier 2, DCD Section 9.2.2 which describes one radiation monitor for each of the two independent subsystems (A and B, C and D) with six radiation monitor sample points located in the A, B, C, D, A-1 and C-1 headers, downstream of the CCWS heat exchangers. The CCWS radiation monitors provide main control room indication and alarms and in the event the radiation setpoint is exceeded, the CCWS surge tank vent valve will automatically close. Based on the staff's review of the CCWS radiation monitors, if radioactively from a higher pressure
component leaks to the CCWS it should be detected; however, it was noted from the P&ID of the six monitoring points, only two sample points are normally open and four sample points are locked closed. Based on a review of the information that was provided, the applicant needs to revise the DCD to address the following:

- The CCWS radiation monitors are relied upon for satisfying 10 CFR 20.1406 and GDC 64 requirements and are considered to be important system design features. Therefore, these monitors should be identified in Tier 1, DCD and shown in Tier 1, Figure 2.7.3.3-1.
- As shown in Tier 2, DCD Figure 9.2.2-1, four of the root valves for CCWS radiation monitoring are shown as locked closed. In the event the A and B or C and D headers become isolated (safety injection with bus under voltage, high containment pressure, low surge tank level) there will be no available system radiation monitoring since the root valves are lock closed. The bases for the lock closed valves radiation root valves need to be described in the DCD.

ANSWER:

The purpose of the radiation monitors is to provide indication of the remote event of the inleakage during the normal operation, and are not directly related to the safety function of the CCWS. Therefore, the description in Tier 1 is not appropriate. During normal operation with trains connected one sample point in each subsystem is sufficient to monitor the entire system. The root valves for the A, B, C and D header are locked closed to ensure the trains are completely isolated following an automatic closure of the header isolation valves.

Impact on DCD

There is no impact on the DCD.

Impact on COLA

There is no impact on the COLA.

Impact on PRA

There is no impact on the PRA.

RESPONSE TO REQUEST FOR ADDITIONAL INFORMATION

6/19/2009

US-APWR Design Certification

Mitsubishi Heavy Industries

Docket No. 52-021

RAI NO.: **NO. 362-2278 REVISION 0**

SRP SECTION: **09.02.02 – REACTOR AUXILIARY COOLING WATER SYSTEM**

APPLICATION SECTION: **9.2.2**

DATE OF RAI ISSUE: **5/13/2009**

QUESTION NO.: 09.02.02-43

Standard Review Plan (SRP) Section 9.2.2, specifies in Section III confirmation of the overall arrangement of the component cooling system (CCWS). 10 CFR 52.47(a)(2), contents of applications, technical information states that, "The description shall be sufficient to permit understanding of the system designs and their relationship to the safety evaluations." Technical Specification (TS) Bases (B3.7.7) under APPLICABLE SAFETY ANALYSES, only lists the following two design bases of the CCWS:

(1) to remove the post loss of coolant accident heat loads from the refueling water storage pit, and
(2) to cool the unit from RHR entry conditions to MODE 5, during normal and post accident operations.

The staff considers this section of the TS Bases as incomplete and should describe other applicable analysis of the CCWS, for example, cooling for the containment sprays pumps, cooling for the safety injection pumps and reactor coolant pumps thermal barrier cooling.

ANSWER:

As stated in this question, the CCWS also has a safety function to cool the ESF pumps and reactor coolant pump thermal barrier, to support their safety functions. The CCWS system design is described in Subsection 9.2.2.1 Design Bases. The evaluation of this function is described in Subsection 9.2.2.3 Safety Evaluation. As stated in Subsection 9.2.2.3, the CCWS has sufficient capability to provide cooling water required for various components during all plant operating conditions. Therefore, there is a sufficient description of relationship to the safety evaluation.

In safety analyses, function to provide cooling water for various components, such as safety

injection pumps, CS/RHR pumps and RCP thermal barriers, is assumed. Therefore, the first sentence of TS Bases, Applicable Safety Analyses will be revised as follows:

> The design basis of the CCW System is for two CCW trains to remove the post loss of coolant accident (LOCA) heat load from the refueling water storage pit **and other components, such as Safety Injection Pumps and CS/RHR Pumps**.

Impact on DCD

The first sentence of APPLICABLE SAFETY ANALYSES in TS Bases 3.7.7 will be revised as shown in the above.

Impact on COLA

There is no impact on the COLA.

Impact on PRA

There is no impact on the PRA.

RESPONSE TO REQUEST FOR ADDITIONAL INFORMATION

6/19/2009

US-APWR Design Certification

Mitsubishi Heavy Industries

Docket No. 52-021

RAI NO.: **NO. 362-2278 REVISION 0**

SRP SECTION: **09.02.02 – REACTOR AUXILIARY COOLING WATER SYSTEM**

APPLICATION SECTION: **9.2.2**

DATE OF RAI ISSUE: **5/13/2009**

QUESTION NO.: 09.02.02-45

10 CFR 52.47(b)(1) requires the proposed inspections, tests, analyses, and acceptance criteria (ITAAC) that are necessary and sufficient to provide reasonable assurance that the plant will be built in accordance with the certification. The staff found that the Tier 1 information is incomplete, inconsistent, inaccurate, and that clarification is needed to revise the Tier 1 information to address the following concerns:

(1) Missing specific acceptance criteria for some ITAAC items in Table 2.7.3.3-5;

- Item 6 b, Components are verified to be powered from their respective Class 1E division; however, there needs to be a list of the equipment and their power supplies in Tier 1.
- Item 7 b; Component cooling water system (CCWS) provides adequate cooling water, but there needs to be a specific heat removal rate identified.
- Item 9 a; Remote operated components that perform an active safety function need to be verified to change positions. Clarify that testing of these components should include the logic that will cause these active components to change positions. The logic and interlocks should be identified in Tier 1, Section 2.7.3 tables, and beside the listed component that performs an active function that should list the active position. Table 2.7.3.3-2 is confusing since many of the valves indicate an active safety function of "transfer open/transfer closed"; however, the active signal is for the valves to automatically close or open, not both.
- Table 2.7.3.3-5 needs to specify that CCWS pump testing to demonstrate adequate net positive suction head to be completed at the maximum CCWS flow rate conditions, with the inventory in the surge tank at the lowest allowable level (as corrected to account for actual temperature). The maximum CCWS flow rate and minimum allowable surge tank water level, along with the corresponding design basis water temperature needs to be listed to assure that test conditions are properly established. The acceptance criteria for an acceptable test need to be specified.
- Inspections should be specific to ASME III pipe supports.

(2) Missing ITAAC items that will assure required flow to some important users:

- Safety injection pumps and motors, containment spray pumps and motors, containment spray and residual heat removal heat exchangers.
- Component cooling water pump motor coolers.
- Reactor coolant pumps (RCP) and thermal barrier crosstie system functional capability.
- Spent fuel pit heat exchanger.
- Charging pumps.
- Emergency surge tank makeup capability.

(3) Missing ITAAC items that were not adequately addressed:

- ITAAC for verification of water hammer prevention design features such as adequate high point vents and or operational procedures for the avoidance of water hammer.
- ITAAC for American Society of Mechanical Engineers (ASME) III relief valve testing verification and set point verification for water-filled systems inside containment.
- ITAAC item to provide initial confirmation that all the CCWS radiation monitors are capable of performing their design functions and will provide required isolation of the surge tank.
- ITAAC item for verification of the all backup water supply to the CCWS surge tanks.
- Check valve functionality needs to be added to Table 2.7.3.3-5.
- Equipment locations need to be added to Table 2.7.3.3-5.
- Testing of remote shutdown console (RSC) control needs to be added to Table 2.7.3.3-5.
- Main control alarms need to be addressed in Table 2.7.3.3-5, such as those that are identified in Table 2.7.3.3-4.

(4) In some cases, the acceptance criteria for the inspections, tests, analyses, and acceptance criteria (ITAAC) that are included in Tier 1 of the DCD are non descriptive and do not provide numeric values. For example, Tier 1, DCD Table 2.7.3.3-5 item 7.b states, "The as-built CCWS provides adequate cooling water required for the various components during all plant operating conditions, including normal plant operating, abnormal and accident conditions." The NRC review criteria that is provided in SRP Section 14.3, "Inspections, Tests, Analyses, and Acceptance Criteria," calls for numeric performance values as ITAAC acceptance criteria when values consistent with the design commitments are possible. Therefore, the acceptance criteria that are specified for the Tier 1 ITAAC need to be revised to specify numeric performance values to the maximum extent possible, and the use of report documentation should be limited to those cases where the detailed supporting information in Tier 2 of the DCD does not lend itself to concise verification.

ANSWER:

- Question (1)1

  Item 6 b, Components are verified to be powered from their respective Class 1E division; however, there needs to be a list of the equipment and their power supplies in Tier 1.

- Answer (1)1

  The list of equipment powered from Class 1E power source are described in the section for "Class 1E/Qual. For Harsh Envir." in Table 2.7.3.3-2. Also, with regard to the power supplies, they are stated in Section 2.6. Therefore, item 6b can be verified.

- Question (1)2

  Item 7 b; Component cooling water system (CCWS) provides adequate cooling water, but there needs to be a specific heat removal rate identified.

- Answer (1)2

  As revised in response to RAI 192, question 14.03.04-15, ITAAC Item 7 will require a report to conclude that the as-built CCWS provides adequate flow for heat removal during all plant operating conditions, including normal plant operating, abnormal, and accident conditions. MHI believes this approach provides sufficient assurance that ITAAC adequately demonstrate system performance, without introducing excessive detail to Tier 1.

- Question (1)3

  Item 9 a; Remote operated components that perform an active safety function need to be verified to change positions. Clarify that testing of these components should include the logic that will cause these active components to change positions. The logic and interlocks should be identified in Tier 1, Section 2.7.3 tables, and beside the listed component that performs an active function that should list the active position. Table 2.7.3.3-2 is confusing since many of the valves indicate an active safety function of "transfer open/transfer closed"; however, the active signal is for the valves to automatically close or open, not both.

- Answer (1)3

  MHI will revise the description will be added regarding the logic and interlocks of the equipment which have active safety function and are not stated in the text in Tier 1. Also, Table 2.7.3.3-2 will be changed such that in the case the valves function automatically by active signal, whether it is for open or close is understandable.

- Question (1)4

  Table 2.7.3.3-5 needs to specify that CCWS pump testing to demonstrate adequate net positive suction head to be completed at the maximum CCWS flow rate conditions, with the inventory in the surge tank at the lowest allowable level (as corrected to account for actual temperature). The maximum CCWS flow rate and minimum allowable surge tank water level, along with the corresponding design basis water temperature needs to be listed to assure that test conditions are properly established. The acceptance criteria for an acceptable test need to be specified.

- Answer (1)4

  A new ITAAC item 13 to identify that the CCW pump has sufficient net positive suction head will be added.

- Question (1)5

  Inspections should be specific to ASME III pipe supports.

- Answer (1)5

  In MHI's response to RAI 242 question 14.03.03-6, ITAAC # 2.b was revised to explicitly include supports with the piping ITAAC to verify conformance with ASME Code Section III requirements by inspection and analyses.

- Question (2)

  Missing ITAAC items that will assure required flow to some important users:

  - Safety injection pumps and motors, containment spray pumps and motors, containment spray and residual heat removal heat exchangers.
  - Component cooling water pump motor coolers.
  - Reactor coolant pumps (RCP) and thermal barrier crosstie system functional capability.
  - Spent fuel pit heat exchanger.
  - Charging pumps.
  - Emergency surge tank makeup capability.

- Answer (2)

  Refer to the above answer (1)2.

- Question (3)1

  ITAAC for verification of water hammer prevention design features such as adequate high point vents and or operational procedures for the avoidance of water hammer.

- Answer (3)1

  The water hammer prevention of CCWS is to vent when operator fills the system with water. Therefore, there is no ITTAC item which is described about water hammer prevention design

- Question (3)2

  ITAAC for American Society of Mechanical Engineers (ASME) III relief valve testing verification and set point verification for water-filled systems inside containment.

- Answer (3)2

  The relief valves are the components that are not directly significant to the safety function of the CCWS. Also, there are no specific requirements in SRP 14.3 Appendix C II "Inspection, Tests, Analyses and Acceptance Criteria". Therefore, MHI believes it is unnecessary to include the relief valves which are not directly significant to safety as the ITAAC item.

- Question (3)3

  ITAAC item to provide initial confirmation that all the CCWS radiation monitors are capable of performing their design functions and will provide required isolation of the surge tank.

- Answer (3)3

  The CCWS radiation monitors have no safety-related function as mentioned in DCD Tier 2 Subsection 11.5.2.5.2.

Therefore, the description to ITAAC in Tier 1 about the confirmation of the valves which close upon the signal is considered unnecessary.

- Question (3)4

  ITAAC item for verification of the all backup water supply to the CCWS surge tanks.

- Answer (3)4

  The CCWS surge tank supply water is not directly significant to the safety function of the CCWS. Therefore, it is considered unnecessary to include it as the ITAAC item.

- Question (3)5

  Check valve functionality needs to be added to Table 2.7.3.3-5.

- Answer (3)5

  The check valves with safety-related function addressed in DCD Tier 2 Table 3.9-14 on "Valve Inservice Test Requirements" will be added to the Tier 1 figure. These valves are also added to Table 2.7.3.3-2 and Table 2.7.3.3-5 as ITAAC confirmation items.

- Question (3)6

  Equipment locations need to be added to Table 2.7.3.3-5.

- Answer (3)6

  MHI will revise Table 2.7.3.3-5 Item 5.a.i to clarify the equipment location.

- Question (3)7

  Testing of remote shutdown console (RSC) control needs to be added to Table 2.7.3.3-5.

- Answer (3)7

  The ITAAC of the testing of remote shutdown console (RSC) control, it is described in Item 12 of Table 2.7.3.3-5.

- Question (3)8

  Main control alarms need to be addressed in Table 2.7.3.3-5, such as those that are identified in Table 2.7.3.3-4.

- Answer (3)8

  The ITAAC of the main control alarms, is described in item 11 of Table 2.7.3.3-5.

- Question (4)

  In some cases, the acceptance criteria for the inspections, tests, analyses, and acceptance criteria (ITAAC) that are included in Tier 1 of the DCD are non descriptive and do not provide numeric values. For example, Tier 1, DCD Table 2.7.3.3-5 item 7.b states, "The as-built CCWS provides adequate cooling water required for the various components during all plant operating conditions, including normal plant operating, abnormal and accident conditions." The NRC review criteria that is provided in SRP Section 14.3, "Inspections, Tests, Analyses, and Acceptance Criteria," calls for numeric performance values as ITAAC acceptance criteria when values consistent with the design commitments are possible. Therefore, the acceptance criteria that are specified for the Tier 1 ITAAC need to be revised to

specify numeric performance values to the maximum extent possible, and the use of report documentation should be limited to those cases where the detailed supporting information in Tier 2 of the DCD does not lend itself to concise verification.

- Answer (4)

  Refer to the above answer (1)2.

Impact on DCD

- A new ITAAC Item 13 in Table 2.7.3.3-5 will be added as shown below:

Design Commitment	Inspections, Tests, Analyses	Acceptance Criteria
13. The CCW pumps have sufficient net positive suction head (NPSH).	**13. Tests to measure the as-built CCW pump suction pressure will be performed. Inspections and analysis to determine NPSH available to each pump will be performed.**	**13. The as-built system meets the design, and the analysis confirms that the NPSH available exceeds the required NPSH.**

- A new ITAAC Item 9.a.iii in Table 2.7.3.3-5 will be added as shown below:

Design Commitment	Inspections, Tests, Analyses	Acceptance Criteria
	9.a.iii Tests of the as-built check valves will be performed under pre-operational flow, differential pressure, and temperature conditions.	**9.a.iii Each as-built check valve changes position as indicated in Table 2.7.3.3-2.**

- DCD Tier 1 Table 2.7.3.3-2 will be revised as shown below:

Table 2.7.3.3-2 Component Cooling Water System Equipment Characteristics (Sheet 1 of 7)

Equipment Name	Tag No.	ASME Code Section III Class	Seismic Category I	Remotely Operated Valve	Class 1E/ Qual. For Harsh Envir.	PSMS Control	Active Safety Function	Loss of Motive Power Position
Component cooling water (CCW) heat exchangers	NCS-RHX-001 A, B, C, D	3	Yes	-	-/-	-	-	-
Component cooling water pumps	NCS-RPP-001 A, B, C, D	3	Yes	-	Yes/No	ECCS Actuation	Start	-
						LOOP sequence	Start	
						Low CCW header pressure	Start	
Component cooling water surge tanks	NCS-RTK-001 A, B	3	Yes	-	-/-	-	-	-
Component cooling water pump discharge check valves	**NCS-VLV-016 A, B, C, D**	**3**	**Yes**	**-**	**-/-**	**-**	**Transfer Open/ Transfer Closed**	**-**
CCW supply header tie line isolation valves	NCS-MOV-020 A, B, C, D	3	Yes	Yes	Yes/No	ECCS Actuation and undervoltage signal	Transfer Closed	As Is
						Containment Spray	Transfer Closed	
						Low-low CCW surge tank water level	Transfer Closed	
						Remote Manual	Transfer Open/ Transfer Closed	

Table 2.7.3.3-2 Component Cooling Water System Equipment Characteristics (Sheet 3 of 7)

Equipment Name	Tag No.	ASME Code Section III Class	Seismic Category I	Remotely Operated Valve	Class 1E/ Qual. For Harsh Envir.	PSMS Control	Active Safety Function	Loss of Motive Power Position
RCP CCW supply line inside containment check valves	**NCS-VLV-403 A, B**	**2**	**Yes**	**-**	**-/-**	**-**	**Transfer Open/ Transfer Closed**	**-**
Reactor coolant pump thermal barrier heat exchanger component cooling water supply check valves	**NCS-VLV-405 A, B, C, D**	**3**	**Yes**	**-**	**-/-**	**-**	**Transfer Open/ Transfer Closed**	**-**
RCP CCW supply line outside containment isolation valve bypass valves	NCS-MOV-445 A, B	2	Yes	Yes	Yes/No	Remote-Manual	Transfer Open/ Transfer Closed	As Is
RCP CCW return line inside containment isolation valves	NCS-MOV-436 A, B	2	Yes	Yes	Yes/Yes	Containment Isolation Phase B	Transfer Closed	As Is
						Remote-Manual	Transfer Open/ Transfer Closed	
RCP CCW return line inside containment check valves	**NCS-VLV-437 A, B**	**2**	**Yes**	**-**	**-/-**	**-**	**Transfer Closed**	**-**
Reactor coolant pump component cooling water return line check valves	**NCS-VLV-439 A, B**	**3**	**Yes**	**-**	**-/-**	**-**	**Transfer Open/ Transfer Closed**	**-**
RCP CCW return line inside containment isolation valve bypass valves	NCS-MOV-447 A, B	2	Yes	Yes	Yes/Yes	Remote-Manual	Transfer Open/ Transfer Closed	As Is

Table 2.7.3.3-2 Component Cooling Water System Equipment Characteristics (Sheet 5 of 7)

Equipment Name	Tag No.	ASME Code Section III Class	Seismic Category I	Remotely Operated Valve	Class 1E/ Qual. For Harsh Envir.	PSMS Control	Active Safety Function	Loss of Motive Power Position
Excess letdown heat exchanger CCW return line outside containment isolation valve	NCS-MOV-517	2	Yes	Yes	Yes/No	Containment Isolation Phase A	Transfer Closed	As Is
Auxiliary building CCW supply line first isolation valve	NCS-AOV-601	3	Yes	Yes	Yes/No	ECCS Actuation	Transfer Closed	Closed
						Containment Isolation Phase B	Transfer Closed	
						Low-low CCW surge tank water level	Transfer Closed	
Auxiliary building CCW supply line second isolation valve	NCS-AOV-602	3	Yes	Yes	Yes/No	ECCS Actuation	Transfer Closed	Closed
						Containment Isolation Phase B	Transfer Closed	
						Low-low CCW surge tank water level	Transfer Closed	
Auxiliary building component cooling water return header check valve	**NCS-VLV-652**	**3**	**Yes**	**-**	**-/-**	**-**	**Transfer Closed**	**-**
Auxiliary building component cooling water return header check valve	**NCS-VLV-653**	**3**	**Yes**	**-**	**-/-**	**-**	**Transfer Closed**	**-**

Table 2.7.3.3-2 Component Cooling Water System Equipment Characteristics (Sheet 6 of 7)

Equipment Name	Tag No.	ASME Code Section III Class	Seismic Category I	Remotely Operated Valve	Class 1E/ Qual. For Harsh Envir.	PSMS Control	Active Safety Function	Loss of Motive Power Position
Turbine building CCW supply line first isolation valves	NCS-AOV-661 A, B	3	Yes	Yes	Yes/No	ECCS Actuation and undervoltage	Transfer Closed	Closed
						Containment Isolation Phase B	Transfer Closed	
						Low-low CCW surge tank water level	Transfer Closed	
Turbine building CCW supply line second isolation valves	NCS-AOV-662 A, B	3	Yes	Yes	Yes/No	ECCS Actuation and undervoltage	Transfer Closed	Closed
						Containment Isolation Phase B	Transfer Closed	
						Low-low CCW surge tank water level	Transfer Closed	
Turbine building component cooling water return header check valve	**NCS-VLV-670A, B**	**3**	**Yes**	**-**	**-/-**	**-**	**Transfer Closed**	**-**
Turbine building component cooling water return header check valve	**NCS-VLV-671A, B**	**3**	**Yes**	**-**	**-/-**	**-**	**Transfer Closed**	**-**
RCP thermal barrier heat exchanger CCW return line first isolation valves	NCS-FCV-1319 A 1320 A 1321 A 1322 A	3	Yes	Yes	Yes / Yes	High RCP thermal barrier CCW flow 1	Transfer Closed	As Is

• DCD Tier 1 Figure 2.7.3.3-1 will be revised as shown below:

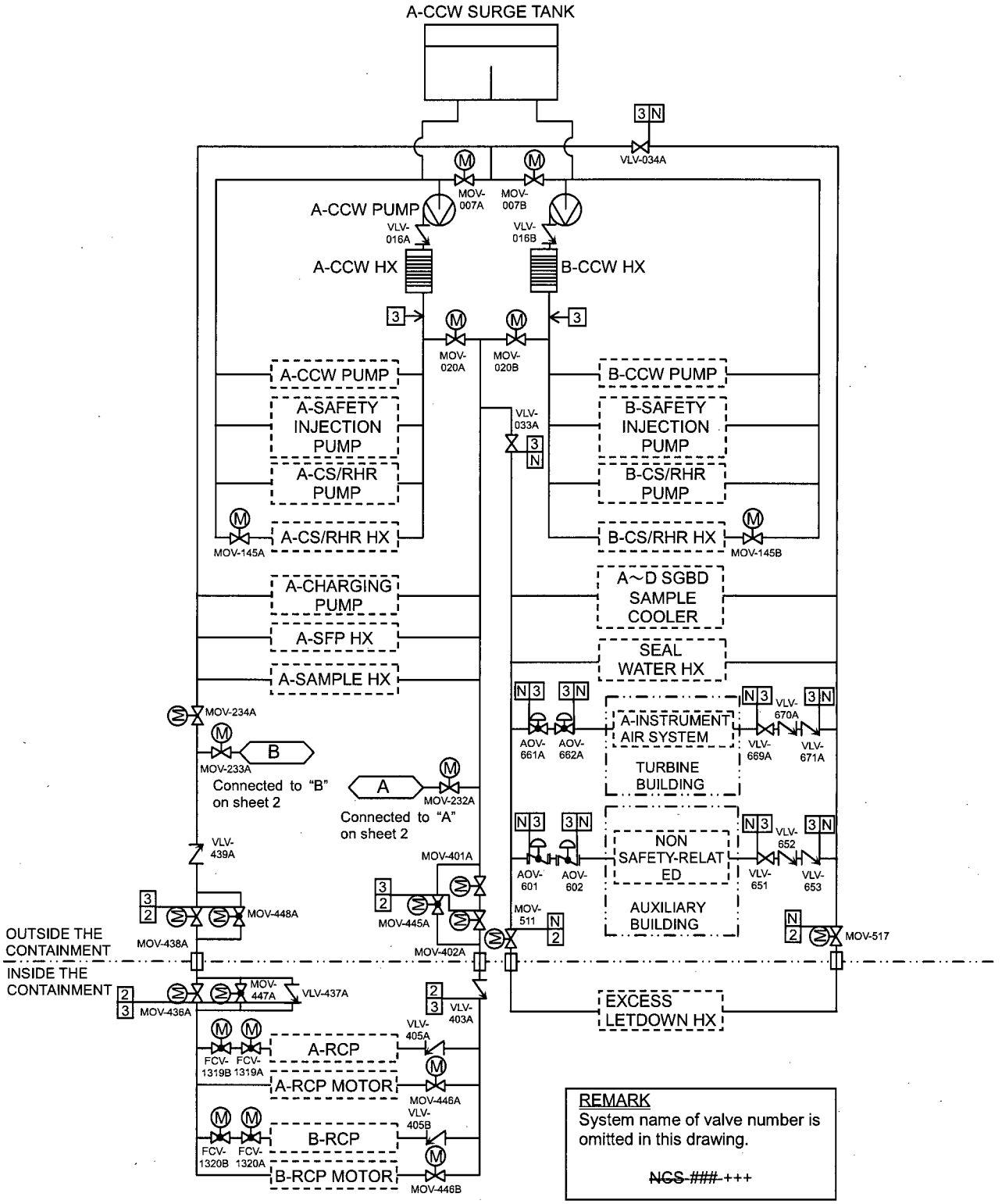

Figure 2.7.3.3-1 Component Cooling Water System (Sheet 1 of 2)

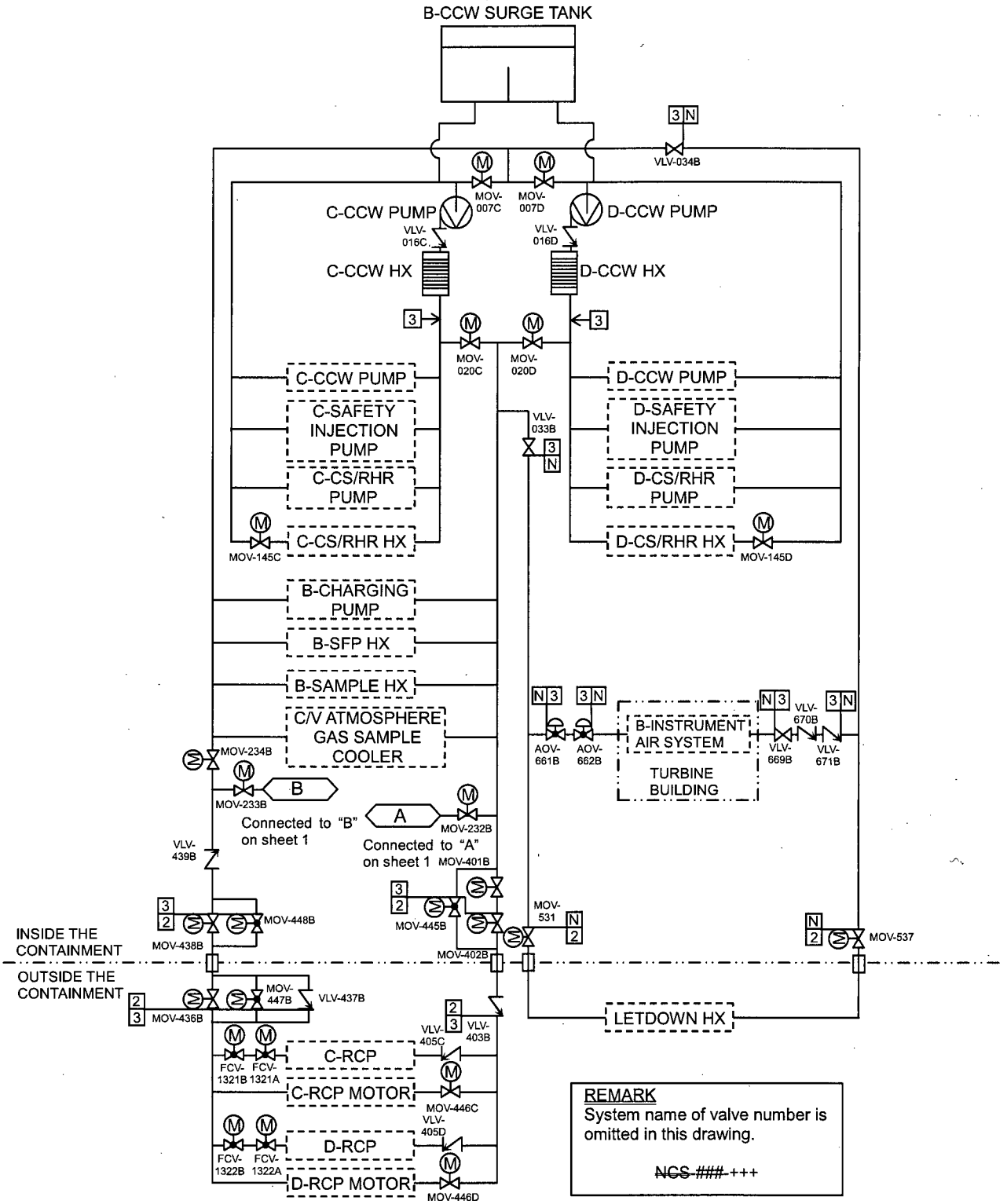

Figure 2.7.3.3-1 Component Cooling Water System (Sheet 2 of 2)

Impact on COLA

There is no impact on the COLA.

Impact on PRA

There is no impact on the PRA.