Figure 9.5.7-1—Emergency Diesel Generator Lubricating Oil System

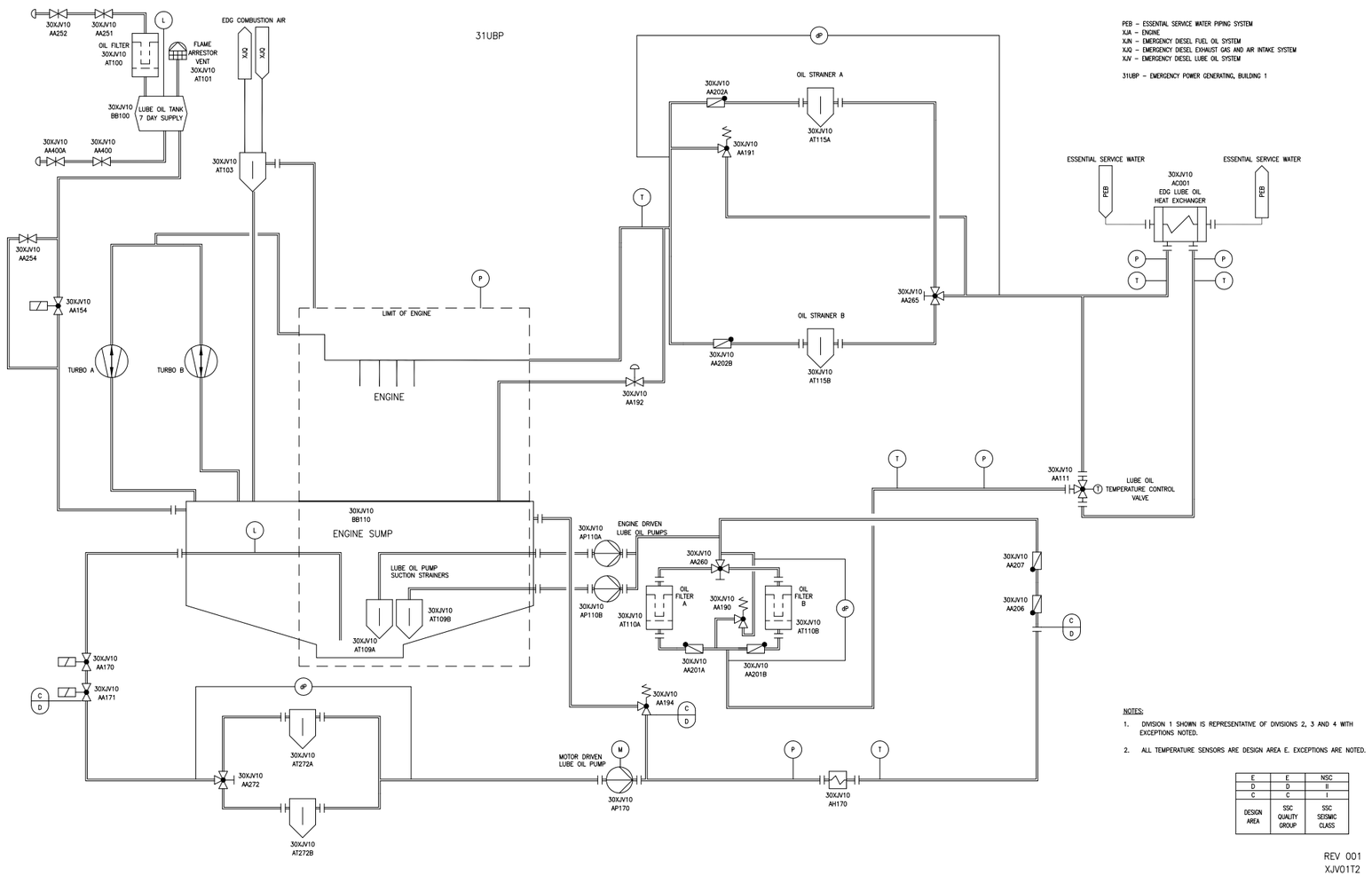

Next File