Figure 9.4.2-1—Fuel Building Ventilation System

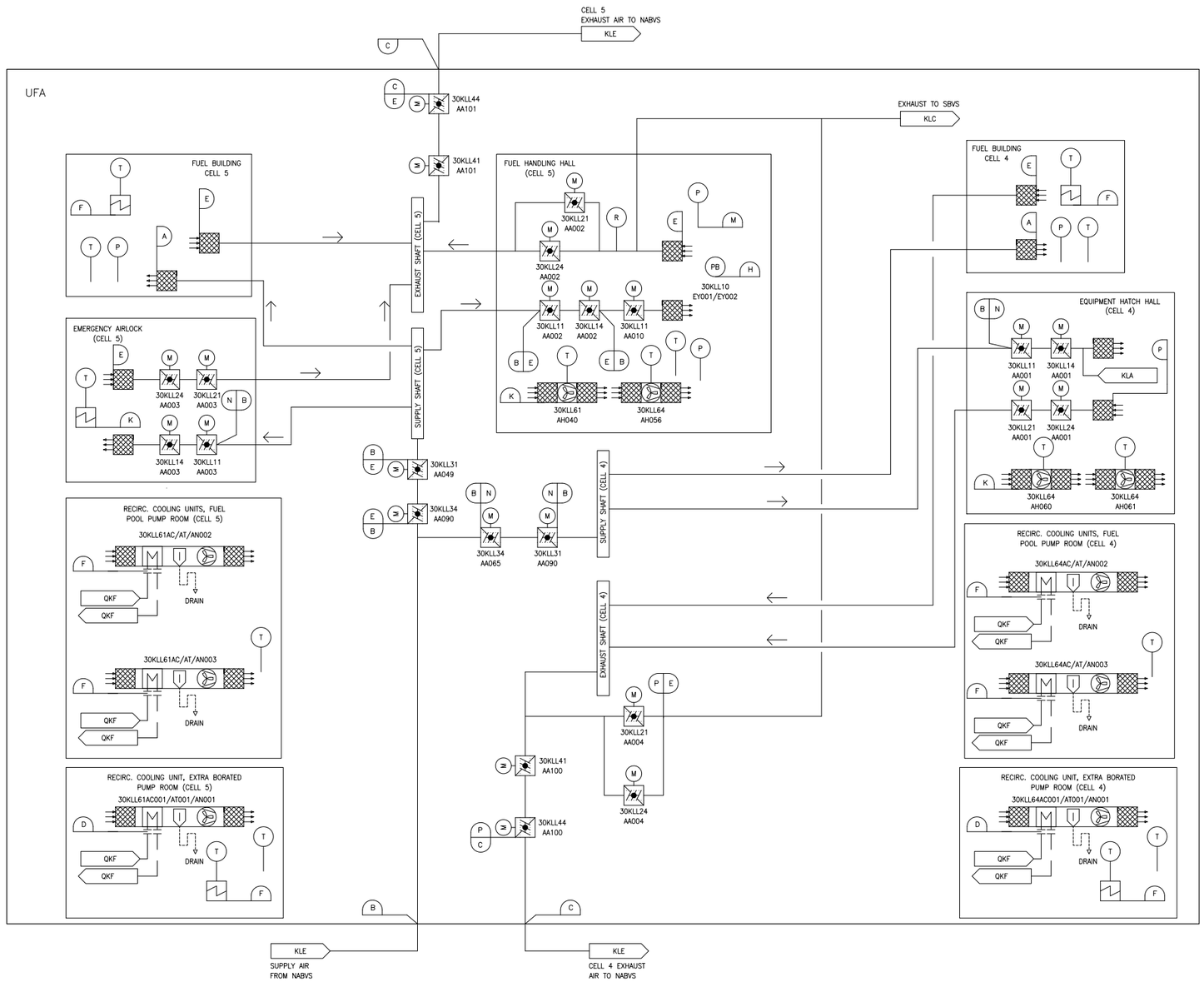

KLA – CONTAINMENT BUILDING VENTILATION SYSTEM
KLC – SAFEGUARD BUILDING CONTROLLED AREA VENTILATION SYSTEM
KLE – NUCLEAR AUXILIARY BUILDING VENTILATION SYSTEM
KLL – FUEL BUILDING VENTILATION SYSTEM
QKF – SAFETY CHILLED WATER SYSTEM IN FUEL BUILDING

UFA – FUEL BUILDING

P	C	I
N	C	I
M	C	I
K	D	I I
H	C	I
F	C	I
E	C	I
D	C	I
C	D	I I
B	D	I I
A	D	I I
DESIGN AREA	SSC QUALITY GROUP	SSC SEISMIC CLASS

REV 001
KLL01T2

Next File