5.4 Component and Subsystem Design

This section presents the design bases, descriptions, and evaluations of the primary RCS components. The components of the RCS are designed to operate in the environment present when the reactor is at power. Components important to safety are designed to perform their safety functions in an environment degraded by a design basis accident. Section 3.11 provides a detailed list of components in the RCS and their environmental qualifications. Radiological considerations including radiation effects on operations and maintenance are provided in Chapter 12.

5.4.1 Reactor Coolant Pumps

The reactor coolant pumps (RCP) provide forced flow circulation of the reactor coolant to transfer heat from the reactor core to the steam generators (SG). The RCPs form part of the reactor coolant pressure boundary (RCPB) during all modes of operation, thereby retaining the circulated reactor coolant and entrained radioactive substances. Figure 5.4-1—Reactor Coolant Pump and Subassemblies, shows a typical RCP assembly.

5.4.1.1 Design Bases

The RCPs provide adequate forced flow circulation during normal operation and anticipated operational occurrences (AOO), including loss of power. The design flow rate of the RCP is based on the thermal hydraulic considerations established in Section 4.4.

The RCPs are part of the RCPB and are designed, fabricated, erected and tested so as to have an extremely low likelihood of abnormal leakage, of rapidly propagating failure, and of gross rupture (GDC 14). In the event of station blackout (SBO) the integrity of the RCP pressure boundary is maintained to prevent unacceptable RCPB leakage.

The RCPs are designed, fabricated, erected, and, tested to quality standards commensurate with the safety-related functions to be performed. Section 3.2 identifies component classifications (GDC 1, 10 CFR 50.55a(a)(1)).

5.4.1.2 Design Description

A typical RCP assembly is shown in Figure 5.4-1. The RCP design data are given in Table 5.4-1—Reactor Coolant Pump Design Data. The RCP materials are given in Section 5.2.3. The RCP supports are described in Section 5.4.14.

The RCPs are constructed to ASME Section III of the Boiler and Pressure Vessel Code (Reference 1). The RCP pressure boundary components and supports are constructed to ASME Section III, Class 1 requirements. The RCP design stress limits, transient conditions, and combined loading conditions are described in Section 3.9.

There are four identical RCP assemblies used in the U.S. EPR plant design. The RCPs are centrifugal, single stage pumps with mechanical shaft seals driven by squirrel-cage type induction motors as shown in Figure 5.4-1. Each RCP assembly has one common vertical shaft line for the pump and motor with main and auxiliary bearings, one single double thrust bearing and a flywheel located at the top of the motor shaft.

5.4.1.2.1 Pumps

All parts of the pump in contact with the reactor coolant are austenitic stainless steel, except for seals, bearings and gaskets.

The shaft seal system is made up of a series of three seals and a standstill seal. The shaft seal design provides redundancy so that a failure of a single seal stage will not result in an uncontrolled loss of reactor coolant. The standstill seal is a metal-to-metal contact seal that prevents leakage when the RCP has stopped and the three seal leak-off lines have been isolated. The standstill seal is normally used under these conditions:

- In the event of a concurrent loss of injection water (chemical and volume control system (CVCS)) and cooling water for the thermal barrier (component cooling water system (CCWS)).
- In the event of concurrent failure of all three shaft seals.
- In the event of a station blackout.

The standstill seal is activated by compressed nitrogen and is designed to stay closed if the gas pressure is lost, and to remain closed and maintain RCS pressure boundary integrity down to an RCS pressure of approximately 218 psia. If the nitrogen pressure is maintained on the standstill seal, it will maintain RCS pressure boundary integrity down to zero RCS pressure. Position indication is provided for the standstill seal. Standstill seal operability is maintained after a safe shutdown earthquake (SSE).

The temperature of the water within the RCP shaft seal assembly is normally maintained within acceptable limits by seal injection water supplied from the CVCS. Water from the CVCS is injected into the cavity upstream of the number 1 seal, at a pressure slightly higher than the reactor coolant, through a connection on the thermal barrier flange. A portion of this water descends through the thermal barrier heat exchanger (HX) and auxiliary bearing into the RCP casing, while the other portion rises through the shaft seal system.

If seal injection from the CVCS is lost, cooled water from the RCS will enter the shaft seal assembly. The hot RCS water is cooled by the thermal barrier HX before entering the RCP shaft seal assembly. The thermal barrier HX is sized to cool the RCS water below the maximum acceptable shaft seal injection water temperature. Cooling water to the thermal barrier HX is supplied by the CCWS.

The RCP shaft seal assembly can therefore withstand the loss of either the CVCS seal injection flow or thermal barrier component cooling water flow, and continue to operate indefinitely. During a loss of all cooling to the RCP shaft seal, the pressure boundary is maintained by an automatic trip of the affected RCP with automatic closure of the standstill seal and the associated leak-off lines to and from each seal stage after the RCP has stopped.

Immediately after loss of power to the RCPs, adequate flow is maintained by the inertia of the RCP, including the flywheel-equipped motor.

5.4.1.2.2 Motors

The pump motor is an asynchronous, squirrel cage motor. It is of the open and self-ventilated type. The motor is designed to start and accelerate up to normal operating speed with reverse flow and 80 percent of rated voltage at the motor terminals.

The guide bearings and double thrust bearing are oil lubricated pad bearings. The RCP motor oil lubrication piping and HX are designed to withstand an SSE.

An oil injection device is provided to inject oil into the axial double thrust bearing pads and upper guide bearing during startup and normal shutdown of the RCP. The lower guide bearing is submersed in the lower bearing oil reservoir and is thereby self-lubricating, and does not require oil injection. During normal motor operation and coast down, no external oil pump is needed. Bearing lubrication is accomplished by pumping action of the oil within the bearing.

An oil collection system is provided to collect and drain the motor lube oil (upper and lower bearing lube oil systems) in the event of leakage from the motor lubrication system. The oil collection system is designed in accordance with the fire protection requirements for RCP oil collection systems as presented in RG 1.189. A process and instrumentation drawing of the oil collection system is shown in Figure 5.4-1.

An anti-rotation device is mounted on the lower face of the flywheel. The device prevents reverse rotation of the RCP impeller if there is reverse flow in the casing.

5.4.1.3 Instrumentation Requirements

Instrumentation is provided to monitor RCP operation. This instrumentation includes but is not limited to that required to monitor the temperature of the cooling water to the shaft seal, RCP vibration, shaft speed, motor temperature, motor bearing temperatures and oil reservoir levels.

The RCPs receive a safety-related trip from the protection system during a loss of coolant accident or a stage two containment isolation signal. These trips are described in Section 7.3 and Section 8.3.1.

5.4.1.4 Design Evaluation

The RCPs are sized to meet or exceed the design flow rates established by the thermal hydraulic considerations described in Section 4.4.

The net positive suction head (NPSH) required by the RCP is less than the NPSH available under all operating conditions.

Upon loss of power to the RCPs, adequate flow is maintained by pump coast down. Refer to Section 15.3 for minimum RCP coast down curves. The rotating inertia of the pump, motor and flywheel is employed during RCP coast down to continue the reactor coolant flow. The total inertia of the rotating RCP assemblies is adequate to satisfy the Chapter 15 accident analysis.

The RCP serves as part of the RCPB during all modes of operation. The pressure boundary integrity of the RCP is verified for normal, upset, emergency, faulted and test conditions, as defined in Section 3.9.1. The pressure boundary components of the RCP meet the requirements of ASME Section III.

In the unlikely event of an RCP rotor seizure, adequate flow to the core is maintained by the other three operating RCPs as described in Section 15.3.3.

The largest break size remaining after application of the leak before break analysis, described in Section 3.6.3, will not result in a significant RCP overspeed. On that basis, the RCP rotor is precluded from an overspeed due to LOCA that could exceed the structural limits of the pump assembly and cause collateral damage. An increase in turbine generator speed, such as that occurring during a loss of external load event as described in Section 15.2.1, would result in an increase in RCP speed to less than the design speed of 125 percent of normal operating speed. The RCP rotating assembly and flywheel have been designed to sustain these speeds without exceeding the structural limits of the pump assembly or causing collateral damage.

5.4.1.5 Inspection and Testing Requirements

Refer to Section 14.2 (Test #003, Test #012, Test #031, Test #170, and Test #183) for initial plant startup testing.

Non-destructive examinations, as required by ASME Section III for Class 1 components, are performed on all reactor coolant pump pressure retaining parts, qualified supports, and other parts, including the flywheel. The RCP pressure boundary is hydrostatically tested at the manufacture facility and as part of the RCS hydrotest after installation.

The RCP is performance tested by the manufacturer in accordance with ASME PTC 8.2, “Centrifugal Pumps,” (Reference 2). The RCP motors are tested in accordance

with NEMA MG-1, "Motors and Generators," (Reference 3). The RCP motor is also monitored to verify compliance with vibration criteria and is tested up to at least 125 percent of synchronous speed.

5.4.1.6 Pump Flywheel Integrity

5.4.1.6.1 Design Basis

The RCP flywheel is designed with suitable materials with adequate fracture toughness and conservative design procedures. There is a preservice testing and inservice inspection program for RCP flywheels so that the structural integrity of the RCP flywheel will be maintained in the event of design overspeed transients or postulated accidents (GDC 4).

The data on selection of materials, fracture toughness tests, design procedures, preservice overspeed spin testing program and inservice inspection program for the RCP flywheels meet the requirements for GDC 1 and 10 CFR Part 50, 50.55a(a)(1).

5.4.1.6.2 Design Description

A flywheel consisting of a sandwich of two circular steel discs mounted on the end of the motor shaft of each RCP, as shown in Figure 5.4-1, provides sufficient inertia in addition with the inertia of the RCP rotating assembly for the RCPs to maintain DNB margin during the gradual loss of forced RCS flow that occurs during RCP coast down. The flywheels are designed, fabricated, examined and tested in accordance with RG 1.14, "Reactor Coolant Pump Flywheel Integrity."

5.4.1.6.3 Material Selection and Fabrication

The flywheel material is produced by a process that minimizes flaws in the material and improves its fracture toughness properties, in accordance with the relevant portions of RG 1.14. Each forging is fabricated from SA-508, Grade 4N, Class 1 steel, a quenched and tempered, vacuum treated material. Certified material test reports are required for all forgings and demonstrate the acceptability of the flywheel material. No welding is performed on the flywheel. All flame-cut surfaces of the flywheel are removed by machining to a depth of at least 1/2 inch below the flame-cut surface.

5.4.1.6.4 Fracture Toughness

The reference nil-ductility transition temperature (RT_{NDT}) of the flywheel material is no greater than -50°F, which is 90°F below the reactor minimum operating service temperature of 40°F.

The fracture toughness of each forging is verified using direct method fracture mechanics testing in accordance with ASTM E 1820-05a, "Standard Test Method for Measurement of Fracture Toughness," (Reference 4).

The minimum static fracture toughness of the material at the normal operating temperature of the flywheel is determined to be equivalent to a reference stress intensity factor (K_{Ic}) of at least 150 ksi√in.

5.4.1.6.5 Preservice Inspection

Each flywheel undergoes a preservice inspection. This inspection consists of:

- A check of all critical dimensions.
- A 100 percent volumetric examination by ultrasonic methods using the procedures and acceptance criteria specified in of ASME Section III, NB-2540.
- Non-destructive examination of areas of high stress concentration (e.g., bores, keyways, splines and drilled holes) and surfaces adjacent to these areas via liquid penetrant or magnetic particle examination.

The results of the preservice inspection are documented to establish initial flywheel conditions, accessibility and practicality of the program to be used as baseline information for future ISIs.

5.4.1.6.6 Flywheel Design

The flywheel design and selection of material is evaluated based on similar flywheel material used for other RCP designs. Fracture toughness and tensile testing is performed on each flywheel forging to verify that the material conforms to the properties used in this fracture analysis performed in accordance with RG 1.14, Section C.2–Design as described in ANP-10294P, "U.S. EPR Reactor Coolant Pump Motor Flywheel Structural Analysis Technical Report" (Reference 19).

The RCP motor shaft and bearings support the flywheel. The RCP motor shaft and bearings are evaluated to verify that they withstand the loads associated with design conditions, the design basis loss of coolant accident (LOCA), the SSE and the quadratic combination of the design basis LOCA and the SSE.

5.4.1.6.7 Overspeed Testing

Each flywheel assembly is spin tested at the design speed of the flywheel i.e., 125 percent of the maximum synchronous speed of the motor.

5.4.1.6.8 Inservice Inspection

Holes machined into the flywheel permit access, without removing the flywheel, for ultrasonic examination of areas of high stress concentration.

Inservice inspection consists of periodic volumetric examination by ultrasonic methods of the areas of higher stress concentration at the bore and keyway extending

to half of the flywheel radius, or a surface examination by liquid penetrant or magnetic particle methods of all exposed surfaces, at nominal 10 year intervals coinciding with the ASME Section XI Inservice Inspection Schedule.

5.4.2 Steam Generators (PWR)

The SG transfer heat from the reactor core to the secondary system to produce the steam required for turbine operation.

5.4.2.1 Design Bases

The SGs are designed, fabricated, examined and tested to the requirements of Section III of the ASME Code, as required by 10 CFR 50.55a (GDC 1, GDC, 30). The RCPB pressure-retaining SG components that are made of ferritic materials meet ASME Code requirements for fracture toughness, as required by Appendix G to 10 CFR 50. The materials of construction for the SGs and their fabrication and assembly conform to ASME Section III. They can accommodate the effects of, and are compatible with, the environmental conditions associated with normal operation, maintenance, testing, AOOs, and postulated accidents, and have an extremely low probability of abnormal leakage, rapidly propagating failure and gross rupture (GDC 4, GDC 14).

The SGs are designed with sufficient margin that; when stressed under operating, maintenance, testing, AOOs and postulated accident conditions:

- The design conditions of the RCPB are not exceeded
- The RCPB behaves in a non-brittle manner

Thereby minimizing the probability of rapidly propagating fracture (GDC 15, GDC 31).

The SGs provide the reactor with a heat sink reserve (the SG water inventory) to mitigate design bases accidents for normal operation and design basis accidents (DBA). The SGs form a portion of the RCPB and a barrier to fission product release so that RCS pressure is maintained during all modes of operation except refueling and SG primary-side ISI.

The SG design data is given in Table 5.4-2—Steam Generator Design Data.

5.4.2.2 Design Description

The U.S. EPR SGs are vertical shell, U-tube HXs with integral moisture separating equipment. Each is fitted with an axial economizer to provide increased steam pressure (refer to Figure 5.4-2—Steam Generator Elevation).

On the primary side, the reactor coolant flows through the inverted U-tubes, entering and leaving through nozzles located in the hemispherical bottom head of the SG. The bottom head is divided into hot and cold channel heads by a primary partition plate extending from the apex of the head to the tubesheet. A manway provides access to each side of the channel head for ISI of the tubes, tube plugging, and maintenance operations. The hot side of the channel head is connected to the reactor vessel outlet and the cold side of the channel head is connected to the reactor vessel inlet via the reactor coolant pump.

The lower part of the vessel secondary side is formed by a cylindrical shell and a conical shell. It is fitted with eight handholes in the lower part of the cylindrical shell for maintenance operations and removal of accumulated sludge.

The tube bundle is composed of 5980 tubes. The tubes have a 3/4 in outside diameter and are arranged in a triangular pitch. The ends of the U-tubes are seal welded to the tubesheet cladding in compliance with Sections III and IX of the ASME Code (Reference 1) and undergo helium leak and dye penetrant testing before expansion. After welding, each tube is expanded through the entire tubesheet thickness by a hydraulic expansion process to eliminate crevices between the tube and tubesheet. The tube expansion equipment and procedure have been shown to minimize residual stresses in the transition from the expanded to the unexpanded zone.

To support the tubes, there are nine tube support plates (TSP) spaced over the height of the tube bundle. The TSPs have trifoil broached holes with flat lands to eliminate dryout and to allow free flow of the secondary steam-water mixture. The support plate material is corrosion resistant martensitic stainless steel which limits the potential for tube denting that can result from corrosion product buildup in the tube-to-support gap.

The upper part of the vessel secondary side is formed by a cylindrical shell and an elliptical head. It is fitted with two manways in the upper part of the cylindrical shell for access to the upper internals.

Steam is generated on the shell side, flows upward, and exits through the steam outlet nozzle at the top of the vessel. Feedwater enters the SG at an elevation above the top of the U-tubes.

At the bottom of the wrapper, the water is directed toward the center of the tube bundle by a flow distribution baffle. The baffle design minimizes the tendency of low-velocity fluid to deposit sludge in the tube bundle. The steam-water mixture from tube bundle rises to the steam drum and continues to the dryer assembly which removes moisture.

The moisture separation equipment provides steam at the SG steam outlet with a moisture content that does not exceed 0.25 percent. This is for normal operating conditions with the turbine in operation and includes step and ramp load changes. The dry steam exits from the SG through the steam outlet nozzle which has a steam flow restriction.

The steam generator is designed with an all welded construction with a top discharge internal feedwater header. This design minimizes the effects of water hammer by preventing draining of the header in the event water level drops below the header. In addition, the steam generator internal feedwater piping is sloped continuously upward from the nozzle to the header to preclude thermal stratification/striping.

The designs of the main and emergency feedwater systems and their physical separation further eliminate the risks of water hammer and minimize the effects of thermal stratification as described in U.S. EPR FSAR Tier 2, Section 10.4.7 and Section 10.4.9, respectively.

Each SG is supported vertically by four support legs and laterally guided at two elevations, as described in U.S. EPR FSAR Tier 2, Section 5.4.14. The SG support system is designed to allow thermal expansion of the loop and pressure-induced displacement, but limit displacement during accidents.

The SGs are mounted at an elevation with respect to the reactor vessel that allows the SG side to be drained for tube inspection or repair while maintaining shutdown cooling flow. Closing devices on the channel head inlet and outlet nozzles are provided to facilitate inspection and repair operations inside the SG primary head in parallel with refueling.

Precautions are taken to minimize the formation of sludge in the SG, as addressed in Section 10.3.5 on secondary side water chemistry treatment. In addition, the lower section of the SG secondary side is designed for lancing the sludge that may accumulate on the tubesheet in the low velocity areas.

The design of the SG pressure boundary reduces the number of welds and optimizes their geometry to facilitate ISI. The upper head and the steam outlet nozzle of the steam drum are made from a single forging. The conical shell is forged and has straight ends to facilitate inspection of the connection welds. Removable insulation for access to the welds is provided. Design features allow inspection and maintenance of the SG internals.

On the primary side, the support columns allow easy access to the manway for each side of the channel head. This allows inspection of the inner surface of the channel head in contact with the primary coolant, inspection of the tube to tubesheet cladding welds and inspection of the tube bundle.

On the secondary side, the design provides access to the lower part of the tube bundle and to the tubesheet. Eight hand-holes are distributed around the secondary shell. The hydraulic and mechanical design of the lower internals, including the geometry of the flow blockers and the design of the blowdown system, are optimized to facilitate sludge lancing operations.

Access to the upper internals inside the steam drum is provided by two large manways. The tube bundle anti-vibration bars are accessible via a hatch through the bundle wrapper roof.

5.4.2.3 Design Evaluation

5.4.2.3.1 Mechanical and Flow-Induced Vibration

The analysis of the U.S. EPR SG includes an investigation of the sources of tube vibration that are created from mechanical and flow-induced excitation. The evaluation included analysis of the tube support system, research with tube vibration model tests and operating experience of similar SG designs in France.

The primary source of potential tube wear degradation in the SG is hydrodynamic excitation by the secondary side fluid on the outside of the tubes. Three potential flow-induced vibration mechanisms for the tube bundle were identified and evaluated through linear frequency domain analysis techniques. These three mechanisms include: fluid-elastic instability, random turbulence-induced vibrations and vortex-shedding induced vibrations.

To define the secondary side flow excitation, a three-dimensional, two-phase flow, thermal hydraulic evaluation of the entire tube bundle was performed to determine both the cross flow and parallel flow conditions acting on the tubes. The thermal hydraulic conditions on the secondary side of the tube bundle during steady-state, full power, normal operating conditions were evaluated with consideration also given to the uncertainty of the primary flow measurements.

The tube bundle was evaluated for fluid-elastic instability over the first 60 vibration modes by evaluating the ratio of the critical velocity to the effective cross-flow velocity to an allowable fluid-elastic stability margin of 1.3. The evaluation was performed using parameters including “Connors’ constants” and damping for the straight and U-bend sections which were assessed through testing. The results indicated that fluid-elastic instability will not occur during full-power, steady-state, normal operating conditions.

For flow-induced vibration resulting from random turbulence and vortex-shedding excitations, the resulting amplitudes and stresses were computed considering the cumulative effect of the first 60 vibration modes. The results were compared to allowable limits that would prevent high cycle fatigue failure and tube impacts with

adjacent tubes. Both an un-degraded tube and a degraded tube with 40 percent through-wall wear flaws at the tube support locations were evaluated.

The analysis of the tube for random turbulence excitation resulting from the thermal hydraulic cross flow conditions in the tube bundle showed that the root-mean-square response of the tube fulfilled the acceptance criteria to confirm that fatigue failure and adjacent tube impacts will not occur. Other analyses were performed to evaluate the response of the tube to random turbulence excitation resulting from primary side and secondary side parallel flow along the full length of the straight tube sections. These analyses showed that the response of the tubes to the parallel flow conditions on the tube bundle were insignificant compared to the turbulent response of the tube to the cross-flow conditions.

Non-uniform, two-phase turbulent flow exists throughout most of the tube bundle. Therefore, vibration induced by vortex shedding is possible only for the outer few rows of the tube bundle at the feedwater inlet region and may not be an active excitation mechanism. However, vortex shedding resonance and the conditions for it to occur were conservatively assumed for the most significant first span frequency or mode of the tube susceptible to vortex-shedding frequencies. The flow induced vibration analysis of the tube for vortex shedding determined the zero-peak response of the tube fulfilled the acceptance criteria to confirm that fatigue failure and adjacent tube impacts will not occur.

In addition to the analysis described above, consideration was given to possible excitation from the RCP acoustic pressure fluctuations resulting from the blade passing frequencies. The effects of this excitation mechanism on the tube bundle were shown to be negligible.

Based on the results of the analyses described above for mechanical and flow-induced excitation, the tube bundle and tube support system is adequate for these sources of excitation at full power steady-state normal operating conditions.

5.4.2.3.2 Allowable Tube Wall Thinning for Accident Stresses

Minimum wall thickness SG tubes were analyzed to evaluate the extent of tube wall thinning that is tolerated without exceeding the allowable stress intensity limits defined under the postulated condition of a design-basis pipe break in the RCPB or a break in the secondary piping during reactor operation. The worst-case accident loading conditions were imposed on the thinned SG tubes at the most critical location. The analysis shows that the SG tubes at the minimum wall thickness reduced by 5 mils corrosion allowance, to account for primary and secondary side corrosion, provide an adequate safety margin against the ASME Code allowable limits.

The general corrosion rate is based on a conservative weight-loss rate of Alloy 690 TT tubing in primary side reactor coolant fluid. The estimated general corrosion rate

projected over a 60 year design life is much less than the assumed corrosion allowance of 5 mils for the analysis.

5.4.2.4 Steam Generator Materials

5.4.2.4.1 Selection and Fabrication of Materials

The primary and secondary system pressure boundary materials used in the SG comply with the requirements of Section II and III (NB Article 2120, as applicable) of the ASME Code. A general summary of pressure boundary material specifications is given in Section 5.2.3, with the types of materials for the SG listed inTable 5.2-2—Material Specifications for RCPB Components. Fabrication of RCPB materials is also addressed in Section 5.2.3.

The SG materials and the reactor coolant chemistry are specified for compatibility to avoid degradation or failure in environmental conditions associated with normal operations, maintenance, testing, and postulated accidents, as described in Section 5.2.3. The SG pressure boundary materials are primarily low alloy steel. All surfaces of the SG normally in contact with reactor coolant are alloy 52/52M/152 or stainless steel. The weld deposited cladding on SG primary-side is fabricated and inspected per the requirements of the ASME Code Section III and IX, as described in Section 5.2.3. The tubes and channel head partition plate are Alloy 690. No Alloy 600 material is used in the SG.

To ensure the integrity of the SG tubes, non-pressure boundary components in contact with the SG tubing (e.g., TSPs, flow distribution baffle) are made from martensitic stainless steel, as shown in Table 5.4-3. These materials are supplied in the quenched and tempered condition to prevent stress corrosion cracking.

Austenitic stainless steels are processed using the guidance of RG 1.44, as specified in Section 5.2.3.

Bolt selection is based on the expected service conditions to limit their susceptibility to stress corrosion cracking. The integrity of bolting and threaded fasteners is addressed in Section 3.13 and in Section 5.2.3.

During fabrication, the Alloy 690 tubing is subjected to annealing and thermal treatment processes to increase the tubing's resistance to stress corrosion cracking. These thermal processes relieve residual stresses and improve corrosion.

The code cases used in material selection and conformance with RG 1.84 are addressed in Section 5.2.1.2.

The SG primary and secondary system pressure boundary materials are handled, protected, and stored to prevent damage or deterioration. During manufacture, the

primary and secondary sides of the SG are cleaned in accordance with written procedures that follow the guidance of RG 1.37.

Welding is conducted utilizing procedures qualified according to the rules of Sections III and IX of the ASME Code. Control of welding variables, as well as examination and testing during procedure qualification and production welding, is performed in accordance with ASME Code requirements. Welding of SG components meet the requirements of RG 1.34, RG 1.43, and RG 1.50 and welders and welding operators are qualified in accordance with the ASME Section IX including RG 1.71, as described in Section 5.2.3.

The fracture toughness of ferritic materials is addressed in Section 5.2.3 and meets the requirements of 10 CFR Part 50, Appendix G and Subsections NB and NC of Section III of the ASME Code, as applicable. Meeting Appendix G requirements minimizes the probability of rapidly propagating fracture and gross rupture of the RCPB.

The corrosion/erosion allowance for external surfaces of the SG pressure retaining carbon and low alloy steel is 1/32 inch and for the internal non-clad surfaces it is 1/16 inch.

5.4.2.4.2 Compatibility of Steam Generator Tubing with Primary and Secondary Coolants

The RCS and secondary water chemistry is controlled to minimize negative impacts of chemistry on materials integrity, and is routinely analyzed for verification. Both water chemistry programs are based on industry knowledge and experience. RCS water chemistry guidelines are summarized in the EPRI PWR Primary Water Chemistry Guidelines (Reference 11) and RG 1.44, as described in Section 5.2.3 and Section 9.3.4. Secondary water chemistry guidelines are summarized in the EPRI PWR Secondary Water Chemistry Guidelines (Reference 12), NUREG-0800 Branch Technical Position 5-1, NUREG-1431, and NEI 97-06. These guidelines provide controls for establishing and monitoring secondary water chemistry to inhibit SG tube damage and to limit the susceptibility to degradation of the SGs. Standard operating condition water chemistry controls are provided during operation and cold shutdown/ wet layup conditions. The secondary water chemistry program is described in Section 10.3.5.

As described in Section 5.2.3, procedures are developed to provide cleanliness controls during all phases of manufacture and installation including final flushing for the SGs. As applicable, these procedures supplement the equipment specifications and purchase order requirements of individual components procured for RCPB applications and follow the guidance of RG 1.37, “Quality Assurance Requirements for Cleaning of Fluid Systems and Associated Components of Water-Cooled Nuclear Power Plants.”

Corrosion tests have subjected the SG Alloy 690 tubing to simulated SG water chemistry. Industry test results indicate that the metal loss due to general corrosion over the plant life is insignificant, compared to the tube wall thickness. The prevention of stress corrosion cracking of Alloy 690 materials is described in Section 5.2.3.

The trifoil geometry of the broached holes of the TSPs is less susceptible to the formation of aggressive environments which may corrode the TSP material, leading to denting of the tube wall, or to corrosion of the tubing material. This geometry also results in a reduced fluid pressure drop across the TSPs thereby increasing the recirculation ratio and fluid velocities in the tube bundle. The flow distribution baffle increases the cross-flow velocity immediately above the tubesheet to sweep sludge to the center of the tube bundle where the intakes to the blowdown pipes are located.

The SGs are designed to promote flow into the central regions of the tube bundle to minimize sludge build up.

5.4.2.4.3 Control of Secondary-Side Impurities

Provisions exist to limit the accumulation of impurities in the SG, either by limiting contaminant ingress or by facilitating its removal.

- The secondary side water chemistry treatment program and the materials of construction of the secondary system are selected to minimize flow-assisted corrosion and the formation of corrosion products. The materials include stainless steel tubing in the feedwater heaters and the moisture separator reheaters.
- A partial-flow condensate demineralizer system is provided for use during startup and shutdown, and in the event of a condenser tube leak.

The blowdown system has sufficient capacity for removal of impurities. The feedwater system materials are identified in Section 10.3.6, the SG blowdown system is described in Section 10.4.8, and the condensate demineralizer system is addressed in Section 10.4.6. Instrumentation to monitor secondary-side water chemistry is described in Section 9.3.2.

During shutdowns, accumulated material (surface deposits, sludge, and corrosion products) can be removed from the secondary side of the SGs by hydro-lazing (lancing), chemical cleaning, or other such effective techniques. This helps to further protect the SGs from damage due to the buildup of corrosion products and contamination.

5.4.2.5 Steam Generator Program

The SG program is necessary to provide effective monitoring and management of tube degradation and degradation precursors to permit prompt preventive and corrective

actions to maintain the structural and leakage integrity of the SG tubes. The SG program framework is based on the requirements of NEI 97-06 (Reference 10). The SG program incorporates a balance of prevention, inspection, evaluation, corrective action, and leakage monitoring measures, and establishes performance criteria that define SG tube integrity.

The SG program complies with the following NRC regulations and requirements:

- GDC 32 of Appendix A to 10 CFR Part 50, requiring that the components that are part of the RCPB be designed to permit periodic inspection and testing of critical areas and features to assess their structural and leak tight integrity.
- 10 CFR 50.55a(g), requiring that ISI programs (of which the SG program is a part) meet the inspection requirements of ASME Section XI. More specifically, 10 CFR 50.55a(b)(2)(iii) states that if the plant technical specifications include inspection requirements for SG tubing that differ from those in IWB-2000 of ASME Section XI, the technical specifications govern.
- 10 CFR 50.36 as it applies to the SG program in the technical specifications (Chapter 16).
- 10 CFR 50 Appendix B as it applies to implementation of the SG program, specifically, Criteria IX, XI, and XVI.
- 10 CFR 50.65, requiring that performance or condition of components be monitored to provide reasonable assurance that such components are capable of fulfilling their intended function.

5.4.2.5.1 Steam Generator Design

The SGs are components with Alloy 690 thermally treated tubes. The SGs are designed with sufficient access provisions to support the required tube inspections, testing, and plugging (including stabilization) over the service life of the components.

The primary side of the SG tubes is accessible through primary manways located on the primary channel head of the component, one on the hot leg side and one on the cold leg side. The channel head also has a straight cylindrical section between the tubesheet and the spherical bowl portion to provide greater access to tubes located on the periphery of the tube bundle. This configuration facilitates inspecting the entire length of each tube between the tube-to-tubesheet weld at the tube inlet and the tube-to-tubesheet weld at the tube outlet. It also supports the plugging required (including stabilization) if inspection detects unacceptable flaws and tubes must be removed from service. The tube-to-tubesheet welds are not considered to be part of the tube and are not subject to the requirements of the SG program.

The secondary side of the SG is accessible through two manways located on either side of the component between the moisture separator and dryer equipment in the steam

drum. There are also eight handholes located just above the tubesheet secondary face and two smaller inspection handholes located at the top of the secondary side divider plate. The top of the tube bundle is accessible through an access hatch in the bundle wrapper roof, which also includes three smaller access ports for video inspection. These openings provide access to support SG secondary side inspections and removal of foreign objects and sludge buildup/deposits.

5.4.2.5.1.1 Steam Generator Performance Criteria

Performance criteria identify the standards against which performance is to be measured. The SG performance criteria are based on tube structural integrity, accident-induced leakage, and operational leakage, as defined below. Meeting these performance criteria allows the SG tubing to fulfill its specific safety-related function to maintain RCPB integrity.

5.4.2.5.1.2 Structural Integrity Performance Criterion

The inservice SG tubes shall retain their structural integrity over the full range of normal operating conditions (including startup, operation in the power range, hot standby, cool down and all anticipated transients in the design specification), and design basis accidents as defined by Section 3.9.1. This includes retaining a safety factor of 3.0 against burst under normal steady-state full power operation primary-to-secondary pressure differential and a safety factor of 1.4 against burst applied to the design basis accident primary-to-secondary pressure differentials. Apart from those requirements, additional loading conditions associated with design basis accidents, or combination of accidents in accordance with design and licensing basis, shall also be evaluated to determine if the associated loads contribute significantly to burst or collapse. In the assessment of tube integrity, those loads that do significantly affect burst or collapse shall be determined and assessed in combination with the loads due to pressure with a safety factor of 1.2 on the combined primary loads and 1.0 on axial secondary loads.

5.4.2.5.1.3 Accident Induced Leakage Performance Criterion

The primary-to-secondary accident-induced leakage rate for any design basis accident, other than an SG tube rupture, shall not exceed the leakage rate assumed in the accident analysis in terms of total leakage rate for all SGs and leakage rate for an individual SG.

5.4.2.5.1.4 Operational Leakage Performance Criterion

The RCS operational primary-to-secondary leakage through an SG shall be limited to 150 gallons per day, based on the operational leakage performance criterion in NEI 97-06. The limit is based on operating experience with SG tube degradation mechanisms

that result in tube leakage. The operational leakage rate criterion is an effective measure for minimizing the frequency of SG tube ruptures.

5.4.2.5.2 Steam Generator Program Elements

An SG program provides effective monitoring and management of tube degradation and degradation precursors and provides prompt preventive and corrective actions to maintain structural and leakage integrity of the SG tubes. The major SG program elements are assessment of degradation, inspection requirements for the tubes (including plugging), tube integrity assessment, tube plugging, primary-to-secondary leak monitoring, maintenance of SG secondary side integrity, water chemistry, foreign material exclusion (including loose parts management), contractor oversight, self assessment and reporting.

5.4.2.5.2.1 Degradation Assessment

Prior to planned SG inspections, a degradation assessment is performed addressing the RCPB within the SG (e.g., plugs, tubes, and the components that support the pressure boundary, such as secondary side components) to determine existing and potential types and locations of degradation mechanisms relevant to the plant and to determine which inspection techniques are appropriate for the detection and sizing of those degradation mechanisms and at what locations. The assessment considers operating experience for other similar SGs and the guidance provided in the EPRI Steam Generator Integrity Assessment Guidelines (Reference 8) and EPRI PWR Steam Generator Examination Guidelines (EPRI SG-EG) (Reference 5).

The repair limits for each type of expected degradation are established prior to the inspection. Tubes found by ISI to contain flaws with a depth equal to or greater than 40 percent of the nominal tube wall thickness, as addressed in EPRI Report 1012987, are removed from service by plugging. More conservative limits may be necessary and depend on the results of the tube integrity assessments, in particular the operational assessment.

5.4.2.5.2.2 Tube Inspection

Prior to each SG inspection, the inspections are planned according to the expected tube degradation and follow the inspection guidelines contained in EPRI SG-EG.

Some of the important features of SG tube inspections include:

- Sampling and technique selection as supported by the degradation and integrity assessment.
- Obtaining the information necessary to develop degradation, condition monitoring, and operational assessments.

- Qualifying the inspection program by determining the accuracy and defining the elements for enhancing NDE system performance, including technique, analysis, field analysis feedback, human performance and process controls.

Preservice Inspection

After field hydrostatic testing of the RCS system and prior to placing the SGs in service, all tubes are examined over their full length. In addition, when only bobbin coil probes are used for PSI, a representative sample of abnormal conditions detected shall be examined with other techniques that are appropriate for such conditions and that are expected to be used during subsequent ISIs.

Inservice Inspection

ISI of the SG tubing is performed in accordance with these inspection intervals, subject to additional requirements should degradation be identified:

- Inspect 100 percent of the tubes in each SG during the first refueling outage using techniques consistent with the EPRI PWR SG Examination Guidelines and the Degradation Assessment.

- Inspect 100 percent of the tubes at sequential periods of 144, 108, 72, and thereafter, 60 effective full power months. The first sequential period is considered to begin after the first ISI of the SGs. In addition, inspect 50 percent of the tubes by the refueling outage nearest the midpoint of the period and the remaining 50 percent by the refueling outage nearest the end of the period. No SG will operate for more than 72 effective full power months or three refueling outages (whichever is less) without being inspected.

- If crack indications are found in any SG tube, then the next inspection for each SG for the degradation mechanism that caused the crack indication will not exceed 24 effective full power months or one refueling outage (whichever is less). If definitive information, such as from examination of a pulled tube, diagnostic non-destructive testing, or engineering evaluation indicates that a crack-like indication is not associated with a crack, then the indication need not be treated as a crack.

Inspection of the SG tubing in accordance with these requirements meets IWB-2000 of ASME Section XI.

A COL applicant that references the U.S. EPR design certification will identify the edition and addenda of ASME Section XI applicable to the site-specific SG inspection program.

5.4.2.5.2.3 Tube Integrity Assessment

Tube integrity is assessed after each SG inspection. The assessment includes:

- Condition Monitoring (CM)—a backward-looking assessment of the "as-found" condition of the tubing with respect to the performance criteria for structural integrity and accident-induced leakage, which confirms that adequate SG tube integrity has been maintained during the previous operating period. The "as-found" condition refers to the condition of the tubing during an SG inspection outage, as determined from the ISI results or by other means, prior to the plugging of tubes. Condition monitoring assessments are conducted during each outage during which the SG tubes are inspected or plugged to confirm that performance criteria are being met.

- Operational Assessment—a forward-looking assessment that demonstrates that the tube integrity performance criteria will be met throughout the next operating period.

The assessments account for uncertainties to provide a conservative assessment of the condition of the tubing relative to the performance criteria. The EPRI Steam Generator Integrity Assessment Guidelines and RG 1.121 are used to determine the evaluation methods, margins and uncertainty considerations used to evaluate tube integrity and determine tube repair criteria.

Activities such as in situ pressure testing or pulling tubes may be used as a direct means of verifying that performance criteria have been satisfied. The EPRI Steam Generator In Situ Pressure Test Guidelines (Reference 7) are used for guidance on screening criteria for candidate tube selection, and for test methods and testing parameters. EPRI Steam Generator Tubing Burst Testing and Leak Rate Testing Guidelines (Reference 6) provide further guidance on pulled tube examinations.

If it is determined that structural integrity or accident leakage performance criteria have not been satisfied during the prior operating period, an evaluation of causal factors for failing to meet the criteria is performed and corrective measures are taken, including notifying the NRC as applicable.

5.4.2.5.2.4 SG Tube Plugging

The SG tube plugging methods are qualified and implemented in accordance with industry standards (i.e., ASME Section XI, IWA-4700). The qualification of the plugging technique considers the specific SG conditions and mockup testing. The EPRI PWR Steam Generator Tube Plug Assessment Document (Reference 9) provides further guidance for maintenance and plugging of tubing.

The SG inspection, maintenance, and plugging activities, including contractor activities, are performed using approved procedures that clearly identify engineering prerequisites and plant conditions prior to performing the plugging, and the process controls for proper performance of the plugging including the consideration of post-maintenance testing.

A preservice inspection of the plugging is performed consistent with EPRI SG-EG.

5.4.2.5.2.5 Primary-to-Secondary Leak Monitoring

The primary-to-secondary leakage is verified to be within the operational leakage performance criterion addressed in Section 5.4.2.5.1.4 above at a frequency not exceeding 72 hours. Leakage monitoring is not required to be performed until 12 hours after establishing steady state operation. The surveillance frequency of 72 hours is a reasonable interval to trend primary-to-secondary leakage, and recognizes the importance of early leakage detection for accident prevention. The primary-to-secondary leakage is determined using continuous process radiation monitors or radiochemical grab sampling in accordance with the EPRI PWR Primary-to-Secondary Leak Guidelines. Any observed operational leakage is assessed to determine if adjustments to the inspection program or integrity assessments are warranted.

Appropriate training is provided for operations and chemistry personnel who respond to primary-to-secondary leakage events.

5.4.2.5.2.6 Maintenance of SG Secondary Side Integrity

Secondary-side SG components that are susceptible to degradation are monitored if their failure could prevent the SG from fulfilling its intended safety-related function. Monitoring includes design reviews, an assessment of potential degradation mechanisms, industry experience for applicability and inspections, as necessary, to verify degradation of these components does not threaten tube structural and leakage integrity or the ability of the plant to achieve and maintain safe shutdown. Additional guidance is provided in the EPRI Steam Generator Integrity Assessment Guidelines.

5.4.2.5.2.7 Secondary Side Water Chemistry

Procedures are established for monitoring and controlling secondary-side water chemistry to inhibit secondary-side corrosion-induced degradation in accordance with the EPRI PWR Secondary Water Chemistry Guidelines. Section 5.4.2.4 and Section 10.3.5 provide specific information related to monitoring and controlling U.S. EPR secondary-side water chemistry.

5.4.2.5.2.8 Primary Side Water Chemistry

Procedures are established for monitoring and controlling primary-side water chemistry to inhibit primary-side corrosion-induced degradation in accordance with the EPRI PWR Primary Water Chemistry Guidelines. Section 5.2.3.2 provides information related to monitoring and controlling U.S. EPR primary-side water chemistry.

5.4.2.5.2.9 Foreign Material Exclusion

Procedures are established:

- For control and monitoring of loose parts and foreign materials to inhibit fretting and wear degradation of the SG tubing.
- To define when to perform secondary-side visual inspections, the scope of the inspections, and the inspection procedures and methodologies.
- To control housekeeping and maintenance practices to preclude the introduction of foreign objects into either the primary or secondary side of the SG whenever it is opened (e.g., for inspections, maintenance, repairs, and modification).

Such procedures include these as a minimum:

- Detailed accountability for tools and equipment used during any activity when the primary or secondary side is open.
- Appropriate controls and accountability for foreign objects such as eyeglasses and personnel dosimetry.
- Cleanliness requirements.
- Accountability for components and parts removed from the internals of major components (e.g., reassembly of cut and removed components).

Similar procedural requirements are established to prevent introduction of foreign objects during maintenance evolutions performed in other portions of the plant which could ultimately affect SG integrity. In particular, consideration is given to the potential for introduction of loose parts or foreign objects from secondary side systems.

5.4.2.5.2.10 Contractor Oversight

The licensee performs oversight of contracted work. When the licensee contracts potions of the SG program work scope, the responsibility for program implementation remains with the licensee. Additional guidance on contractor oversight can be found in the applicable EPRI steam generator guidelines, listed in Reference 5.4.15, which govern the activity.

5.4.2.5.2.11 Self Assessment

Self assessments of the SG program are performed periodically by knowledgeable personnel. The assessment, or a combination of assessments, includes the major program elements as described Section 5.4.2.5.2.

5.4.2.5.3 Reporting

A report is submitted to the NRC within 180 days after the initial entry into MODE 4 following completion of an inspection performed in accordance with the SG program. The report includes:

- The scope of the inspection performed on each SG.
- Active degradation mechanisms.
- Non-destructive examination techniques utilized for each degradation mechanism.
- Location, orientation (if linear) and measured sizes (if available) of service-induced flaw indications.
- Number of tubes plugged during the inspection outage for each active degradation mechanism.
- Total number and percentage of tubes plugged to date.
- The results of condition monitoring, including the results of tube pulls and in situ testing.

If a performance criterion is exceeded, reports required by 10 CFR 50.72 and 50.73 are submitted to the NRC, including a root cause evaluation identifying the performance criterion exceeded and an operation assessment establishing the basis for the next operating cycle.

5.4.3 Reactor Coolant Piping

The RCS piping includes the main coolant lines for the four loops; the post-accident high point vent line; and the pressurizer surge, spray, and relief lines. Portions of other systems such as the safety injection system (SIS) piping (refer to Section 6.3), extra borating system piping (refer to Section 6.8), and CVCS piping (refer to Section 9.3.4) constitute a part of the RCPB, but are not part of the RCS piping.

5.4.3.1 Design Bases

The main coolant lines transport water from the RPV through the SGs and the RCPs and back to the RPV. This flow removes heat from the reactor core and transports the energy to the SGs. The main coolant lines contain boron and water for reactivity control within the reactor during normal and transient conditions. The high point vent is described in Section 5.4.12 and the piping associated with the pressurizer is described in Section 5.4.10 and Section 5.4.11.

The main coolant lines form a part of the RCPB and are designed and fabricated in accordance with ASME Boiler and Pressure Vessel Code (Reference 1), Section III, Class 1 requirements. RCPB piping containing a restricting orifice used to reduce flow

to within the capacity of the CVCS makeup is designed and fabricated in accordance with Section III, Class 2 requirements. Other parts of the RCS piping are designed and fabricated to quality standards consistent with their classifications, identified in Section 3.2.

The criteria for piping stress analyses are presented in Section 3.9. The application of leak-before-break for the RCS piping is addressed in Section 3.6.3.

5.4.3.2 Design Description

Figure 5.1-4 illustrates the piping and instrumentation configuration for the RCS piping and Figure 3.6.3-1 provides the piping layout for the RCS. Table 5.4-4—Reactor Coolant System Piping Design Parametersprovides the principal design parameters for the RCS piping.

Each RCS loop contains three sections of piping:

- The hot leg, which connects the RPV outlet nozzle to the SG inlet nozzle.
- The crossover leg, which connects the SG outlet nozzle to the RCP suction nozzle.
- The cold leg, which connects the pump discharge nozzle to the inlet nozzle of the RPV.

The main coolant lines are forged austenitic stainless steel with inductive bends and separate forged elbows. Large nozzles are machined from the pipe forging and are integral with the main coolant lines. Austenitic stainless steel safe ends on RCS components allow for homogenous field welds to the RCS piping.

Two 4-inch spray lines connect the cold legs of RCS Loops 2 and 3 to spray lances in the steam space of the pressurizer. The pressurizer surge line connects the pressurizer bottom head to hot leg of RCS loop 3. The surge line slopes continuously downward from the pressurizer to the hot leg as shown in Figure 3.6.3-3. The surge line consists of six segments of forged austenitic stainless steel pipe with inductive bends.

The post-accident high point vent is described in Section 5.4.12. The line branches into two parallel vent lines connected to the normal RPV head vent piping upstream of the first RCPB isolation valve and discharges to an SG cubicle through a flow-restricting orifice.

Thermal sleeves on the CVCS charging nozzles and on the pressurizer nozzle connected to the surge line protect the nozzles and nozzle welds from the effects of thermal shock.

5.4.3.3 Design Evaluation

The reactor coolant lines are sized to minimize the pressure drop in the primary loops and to reduce the flow velocity. The surge line is sized to limit the frictional pressure loss in the line for the maximum in-surge to provide RCS overpressure protection during normal, upset, and emergency conditions.The effects of surge line thermal phenomena (thermal stratification, vortex penetration, and thermal shock) are minimized for the U.S. EPR because of the following:

- The surge line piping slopes continuously upward from the hot leg to the pressurizer as shown in Figure 3.6.3-3.
- During phases of RCS heatup when the pressurizer to hot leg temperature difference is significant, outsurge conditions are maintained to minimize thermal shock in the surge line.
- A vertical section at the hot leg end of the surge line mitigates the influence of the cooler hot leg temperatures on the surge line.
- Vortex penetration will not have a strong influence on the inclined piping due to the length of the vertical section attached to the hot leg and the outsurge flows established during plant heatup and cooldown. Even if colder hot leg fluid were to reach the inclined surge line section, the inclination angle would not allow the higher density fluid to flow towards the pressurizer.
- The nominal temperature difference between the pressurizer and the hot leg is less than 80°F at hot standby and less than 30°F during full power operation.

Design transients and loading combinations for the RCS piping stress evaluations are addressed in Section 3.9.

Material specifications for the RCS piping are identified in Section 5.2.3. The materials for the RCS piping are selected to minimize the effects of corrosion and erosion and to be compatible with the RCS water chemistry. Fracture toughness of the RCS piping and provisions to control stress corrosion cracking are addressed in Section 5.2.3.

The leak-before-break methodology is applied to the main coolant lines and the pressurizer surge line to eliminate the dynamic effects of pipe ruptures from the design basis. Leak-before-break is addressed in Section 3.6.3.

5.4.3.4 Inspection and Testing Requirements

Non-destructive examinations are performed on the RCS piping during fabrication in accordance with the requirements of ASME Section III.

The fully assembled RCS is hydrostatically tested in accordance with ASME Section III. Refer to Section 14.2 (Test #30) for initial plant testing.

An ISI of RCS piping is conducted in accordance with the applicable inspection programs based on the piping classification. The ASME Class 1 ISI program is described in Section 5.2.4 and the ASME Class 2 and 3 ISI program is described in Section 6.6.

5.4.3.5 Instrumentation Requirements

The reactor coolant lines provide for coolant state measurements at various points in the RCS during all modes of operation for functional awareness and for reactor protection system functions. Each RCS loop provides indication of the following:

- RCS hot leg temperature, wide and narrow range.
- RCS cold leg temperature, wide and narrow range.
- RCS loop level.
- RCS loop flow.
- RCP differential pressure.

Temperature indications in both spray lines confirm the minimum flow through the bypass valves. Surge line temperature indication confirms sufficient continuous flow between the pressurizer and the RCS.

5.4.4 Not Used in U.S. EPR Design

5.4.5 Not Used in U.S. EPR Design

5.4.6 Not Used in U.S. EPR Design

5.4.7 Residual Heat Removal System

The safety injection system / residual heat removal system (SIS/RHRS) provides an emergency core cooling function for postulated events, and removes residual heat from the core and the RCS during normal shutdown and accident conditions. This section describes the residual heat removal (RHR) function of the SIS/RHRS. The emergency core cooling function of the SIS/RHRS is discussed in Section 6.3.

5.4.7.1 Design Basis

The heat removal function of the SIS/RHRS provides cooldown of the RCS during normal shutdown operations after secondary side heat removal by the steam generators has been completed. The heat removal function maintains the reactor coolant temperature within allowable limits for refueling and maintenance activities, including mid-loop operation. The RHR function of the SIS/RHRS also provides a flow path to the chemical and volume control system (CVCS) for low-pressure

purification and mixing of the reactor coolant during shutdown operations. The SIS/RHRS also fills the reactor cavity and the SIS accumulators.

The RHR function of the SIS/RHRS provides normal cooldown of the RCS during normal shutdown operations after secondary side heat removal by the SGs has become ineffective. The U.S. EPR systems are designed to reduce RCS temperature from power operation temperature (approximately 575°F) to approximately 131°F in 40 hours when the entire SIS/RHRS is operable, and to establish conditions that allow removal of the reactor pressure vessel (RPV) head and initiation of refueling operations within approximately 90 hours after initial reactor shutdown.

The U.S. EPR systems (with the SIS/RHRS in its heat removal function) is also capable of bringing the reactor to a cold shutdown condition using only safety-related equipment, with only offsite or onsite power available, within a reasonable period of time following shutdown, assuming the most limiting single failure (BTP 5-4).

The SIS/RHRS is designed, fabricated, erected and tested to quality standards commensurate with the importance of the safety-related functions to be performed (GDC 1, 10 CFR 50.55a(a)(1)), and to remain functional after a safe shutdown earthquake, in accordance with RG 1.29 (GDC 2). Section 3.2 identifies component classifications.

The low head safety injection (LHSI) pump suction piping from the RCS hot legs to the LHSI pump is designed to be self venting to prevent the formation of loop seals (voids) within the piping. Similarly, suction piping from the IRWST for both the LHSI and medium head safety injection (MHSI) pumps is designed to be self-venting to preclude voids within the piping when the SIS/RHRS is in the emergency core cooling function. Therefore, the entire shutdown cooling loop remains flooded when connected to the RCS, protecting the LHSI pumps from suction cavitation and the piping from water hammer (due to voiding) during shutdown cooling operations (GDC 4).

The SIS/RHRS is not shared among nuclear power units (GDC 5).

Operation of the SIS/RHRS is performed from the main control room (MCR) for all operating conditions (GDC 19). Similar operation of the SIS/RHRS can also be performed from the remote shutdown station.

The SIS/RHRS is designed to transfer fission product decay heat and other residual heat from the reactor core at a rate such that acceptable fuel design limits and the design conditions of the RCPB are not exceeded. Suitable redundancy in components and features, and suitable interconnections, leak detection, and isolation capabilities are provided to accomplish this function assuming a single failure with only onsite or only offsite electric power available (GDC 34).

The SIS/RHRS is designed to control and detect leakage outside containment following an accident. The section of the SIS/RHRS that is located outside the containment can be isolated from the containment in the event of a break in the SIS/RHRS piping (10 CFR 50.34(f)(2)(xxvi)). Leakage from the system is detected, monitored, and controlled by plant operating procedures and programs.

The SIS/RHRS interfaces with the RCPB. This interface is considered part of the RCPB. The SIS/RHRS provides a containment isolation function when required.

5.4.7.2 System Description

Four physically separated and independently powered RHR trains comprise the SIS/RHRS. The instrumentation and controls used to manage the operation of the SIS/RHRS are separated and derive input from independent sources for process variables such as RCS pressure and temperature. The instrumentation and controls are independently powered from the same normal and emergency sources that power the associated motive equipment. Schematic piping and instrumentation diagrams for the four SIS/RHRS trains are shown in Figure 6.3-1 through Figure 6.3-3.

The RHR function of the SIS/RHRS performs a single mode of operation with a temperature controlled variable flow rate, and operating temperatures and pressures that vary throughout its normal operating range.

The shutdown cooling loop of each SIS/RHRS train consists of an LHSI pump, LHSI HX, LHSI HX bypass line with flow control valve, LHSI HX discharge line with a temperature control valve, and the RCS hot leg suction line. Upstream of the temperature control valve is a pre-valve that fully opens for shutdown cooling; the valve is closed on the mechanical stop during safety injection to provide flow resistance for pump protection. Various isolation valves are also provided to support maintenance or operations activities, including realignment for shutdown or accident mitigation.

A mini-flow and test line, which are isolated during RHR, branches off of the cold leg injection line upstream of the outboard SIS/RHRS to RCS isolation valve. A CVCS letdown line, to accommodate expansion and shrinkage of the corresponding SIS/RHRS train during shutdown and startup, connects to the SIS/RHRS cold leg injection and hot leg suction lines between the RCPB isolation valves of each train.

The four SIS/RHRS trains are functionally identical except for additional CVCS letdown connections from the LHSI HX discharge and bypass lines of Trains 3 and 4.

For shutdown cooling operations, each SIS/RHRS train is aligned to take suction from the corresponding RCS hot leg, pump the hot reactor coolant through the corresponding LHSI HX where it is cooled by the corresponding CCWS train, and return the reactor coolant to the RCS through the corresponding cold leg. Interlocks

(permissive P14, refer to Section 7.2.1.3.9) prevent alignment of the SIS/RHRS to the RCS while RCS pressure and temperature is greater than approximately 464 psia and 356°F. This feature protects the SIS/RHRS components from overpressure due to exposure to the RCS pressure during reactor operation (intersystem LOCA). Additional features addressing intersystem LOCA are discussed in Section 5.4.7.2.2.

The initial stage of RCS cooldown is accomplished with SG cooling as addressed in Section 10.4.7 and Section 15.2.7. Two trains of the SIS/RHRS are normally placed in service for RHR at an RCS pressure and temperature of approximately 390 psia and 250°F. The remaining two trains are placed in service after the RCS temperature has been further reduced to approximately 212°F. If main steam bypass is unavailable, the SIS/RHRS can be placed in service for shutdown cooling after RCS temperature is reduced to approximately 275°F.

For mid-loop operations, the SIS/RHRS is designed to maintain RCS temperature below approximately 131°F with the CVCS automatically maintaining the RCS level. Level sensors mounted on the RCS hot legs trip the LHSI pumps on low loop level, and the MHSI pumps automatically inject at reduced discharge head in the event of uncontrolled loss of coolant during mid-loop operations. Additional features addressing shutdown and mid-loop operations are discussed in Section 5.4.7.2.1.

Cooling for the SIS/RHRS is supplied by four separate associated trains of the CCWS.

The redundancy of the SIS/RHRS design provides the capability to isolate affected sections of individual trains as required. Automatic isolation of the system, which could adversely impact the system's RCS cooling function, is not provided. Manual isolation capability is provided by series pairs of independently powered valves installed in each suction line.

During SIS/RHRS operation, the RCS is protected from overpressure by the pressurizer safety relief valves (PSRV), as described in Section 5.2.2. Spring loaded safety relief valve on the shutdown cooling suction piping of each RHR train protects the system from overpressure when it is connected to the RCS. The setpoints and capacities for these safety relief valves limit the piping to 110 percent of its design pressure. Fluid discharge through the SIS/RHRS safety relief valves are collected and contained in the IRWST, such that flooding of any safety-related equipment will not occur, the capability of the emergency core cooling function of the SIS/RHRS needed to mitigate the consequences of a postulated LOCA is not reduced, and water provided to the RCS to maintain the core in a safe condition is not discharged outside of the containment (BTP 5-4).

Physical separation for each of the trains is accomplished by locating the trains in separate Seismic Category I structures. This physical separation of the trains protects the system's functions from internal flooding hazard, which would be limited to a

single division. The SIS/RHRS equipment inside the reactor building is located above the flooding level resulting from a pipe failure. The SIS/RHRS trains are qualified to appropriate seismic qualification criteria to protect against the damaging effects of earthquakes. The design and construction of the buildings also protects against the damaging effects of other natural phenomena, such as floods and severe weather effects, and external hazards, such as missiles and fires. The design of the safeguard buildings is described in Section 3.8.

SIS/RHRS equipment and components, including the LHSI pumps, LHSI HXs, and associated piping and valves, are described in Section 6.3. Applicable industry codes and classifications for the equipment and components are identified in Section 3.2.

5.4.7.2.1 Design Features Addressing Shutdown and Mid-Loop Operations

The design features of the U.S. EPR that support improved safety during shutdown and mid-loop operations, addressing NRC Generic Letter 88-17 (Reference 16) and SECY 93-087 (Reference 17), are as follows:

- Inherent redundancy in the design of the four trains safety-related U.S. EPR SIS/RHRS, with each train having separate RCS connections.
- Automatic stop of the LHSI pumps in RHR mode in the event of a low loop level or low delta-P_{sat} (difference between the RCS hot leg temperature and the RCS hot leg saturation temperature).
- Manual opening and closure of the RHR suction isolation valves (in addition to interlocks) prevent unwanted RHR connection or isolation on irregular RCS pressure.
- Safety injection via MHSI with reduced discharge head during low loop level ensures availability of the LHSI pumps for RHR function.
- The RHR connection will be automatically isolated in the event of a break outside of the containment, based on the safeguard building sump level and pressure sensors.
- Spring-loaded safety relief valve, located at the RHR hot leg suction line, protects the SIS/RHRS against over-pressurization when in RHR mode.
- Redundant hot leg level sensors that initiate RCS make-up when the RCS hot leg has reached low level.
- During mid-loop operation, the RCS loop level is controlled by the CVCS low pressure reducing valve to ensure there is sufficient RCS water inventory for operation of the LHSI pumps in RHR mode.
- The reactor pressure vessel (RPV) water level is continually monitored during outage with a level sensor.

- Temperature sensors, located at the RCS hot legs, allow temperature measurement of each hot leg when in a reduced inventory condition.

5.4.7.2.2 Design Features Addressing Intersystem LOCA

The design features of the SIS/RHRS that address the intersystem LOCA section of Reference 17 and SECY 90-016 (Reference 18) are as follows:

- Codes and Standards / Seismic Protection – The portions of the SIS/RHRS interfacing with the RCS and located outside the containment building (in the safeguard buildings) are classified as Quality Group B and Seismic Category I so that the design, manufacture, installation, and inspection of this pressure boundary is in accordance with ASME Boiler and Pressure Vessel Code, Section III, Class 2 Components.

- Increased Design Pressure – The portions of the SIS/RHRS from the RCS to the second reactor coolant pressure boundary (RCPB) isolation valves are designed to the RCS design pressure, and are classified as Quality Group A (ASME Boiler and Pressure Vessel Code, Section III, Class 1 Components) and Seismic Category I. This provides an additional barrier between the RCS and the lower pressure portions of the SIS/RHRS. The remaining portions of the SIS/RHRS are designed so that the ultimate rupture strength exceeds that of the full RCS operating pressure.

- Features Preventing Inadvertent Opening of RCPB Isolation Valves – The first two RCPB isolation valves on the RHR hot leg suction line are interlocked to prevent their opening at RCS pressure and temperature above approximately 464 psia and 356°F. These valves positions are indicated in the control room. The first two RCPB isolation valves on the SIS/RHRS discharge line are check valves that allow only one-way flow.

- SIS/RHRS Safety Relief Valve – The SIS/RHRS safety relief valve on the RHR hot leg suction line is designed to provide overpressure protection to the system, in particular against over-pressurization during RHR mode.

5.4.7.3 Performance Evaluation

The SIS/RHRS was evaluated using heat balance calculations incorporating component performance data presented in Table 6.3-2—Low Head Safety Injection Pumps Design and Operating Parameters and Table 6.3-5—LHSI Heat Exchanger Design and Operating Parameters. The evaluation was performed for the following cases:

- All SIS/RHRS components are operable. Four SIS/RHRS trains are available to remove residual heat.

- The most limiting single failure has occurred in the SIS/RHRS, with offsite power available. Two SIS/RHRS trains are available to remove residual heat, assuming one train is unavailable due to system maintenance and a second train is lost due to the single failure.

- The most limiting single failure has occurred in the SIS/RHRS, with only onsite power available. Two SIS/RHRS trains are available to remove residual heat, assuming one train is unavailable due to system maintenance and a second train is lost due to the single failure.

5.4.7.3.1 Performance Evaluation with All Components Operable

In a normal cooldown, the reactor decreases in power by insertion of the rod cluster control assemblies (RCCA). The cooldown of the RCS must not exceed 90°F/hr, while the cooldown of the pressurizer must not exceed 212°F/hr. From power operation to the hot standby mode, all four reactor coolant pumps (RCPs) are in operation for mixing of the coolant in the RCS, the pressurizer level is automatically controlled by controlling the CVCS letdown flow, the primary pressure is automatically adjusted by the main spray flow and the pressurizer heaters, and the residual heat is being removed by the steam generators. The steam generators levels are controlled by the main feedwater system (refer to Section 10.4.7).

Automatic cooldown of the RCS by the secondary systems from the hot standby mode to SIS/RHRS connection point is accomplished in parallel with the automatic RCS depressurization via the pressurizer. In this phase, the reactor coolant make-up is performed using the CVCS, pressurizer level is automatically controlled by the CVCS letdown line, while the steam generators levels are controlled by the startup and shutdown system.

In the analysis performed, two RCPs are tripped when the RCS temperature decreases to 250°F, another RCP is tripped when the RCS temperature decreases to 158°F, and the last RCP is tripped when the RCS temperature decreases to 122°F.

Two trains of the SIS/RHRS are normally placed in service for residual heat removal when the RCS pressure and temperature decreases below approximately 390 psia and 250°F. The remaining two trains are placed in service after the RCS temperature has been further reduced to approximately 212°F.

Performance curve showing the calculated cooldown rates for four trains operation is shown in Figure 5.4-3—RCS Cooldown for Four Train SIS/RHRS Shutdown Cooling Operation From Figure 5.4-3, the time required to cool the plant down to approximately 250°F is around 7.3 hours after reactor trip, while the time required to cool the RCS temperature down to approximately 131°F (using all four LHSI heat exchangers in the sequence explained) is another 7.7 hours. The total time to cool the plant down to 131°F (for refueling) is approximately 15 hours after reactor trip. This total time attained is much shorter than the required time of 40 hours, as specified in Section 5.4.7.1.

5.4.7.3.2 Performance Evaluation Assuming the Most Limiting Single Failure and Offsite Power Available

For the most limiting single failure scenario, two SIS/RHRS trains are available to remove residual heat, assuming one train is unavailable due to system maintenance and a second train is lost due to the single failure. Offsite power is available; therefore, all auxiliary functions described in Section 5.4.7.3.1 to bring the reactor down to SIS/RHRS connection conditions are available.

Performance curve showing the most limiting single failure and offsite power available is shown in Figure 5.4-4—RCS Cooldown for Two Train SIS/RHRS Shutdown Cooling Operation (with Offsite Power Available). In Figure 5.4-4, two RHR trains (with full flow through the LHSI HXs) are able to cool the plant down from approximately 250°F to 200°F in around 2.7 hours. This cooldown time is achieved with the normal RCP shutdown sequence explained in Section 5.4.7.3.1.

5.4.7.3.3 Performance Evaluation Assuming the Most Limiting Single Failure and Only Onsite Power Available (Bounding Branch Technical Position 5-4 Cooldown)

System(s) that can be used for heat removal, including depressurization, flow circulation, and reactivity control to take the reactor from normal operating conditions to cold shutdown should satisfy the general functional requirements of Branch Technical Position (BTP) 5-4.

The U.S. EPR meets the requirements of BTP 5-4 with the following exception:

> Cases where an EFW pump is unavailable due to single failure or maintenance, action outside of the control room may be required to re-align the manual supply header valves to provide access to the inventory from all four storage pools. Sufficient water inventory is available for six to eight hours of EFWS operation before this action is necessary.

5.4.7.3.3.1 Cooldown Analyses

Cooldown analyses were performed using the RELAP5 computer code for several single failure scenarios with and without offsite power available. The bounding case, with respect to EFWS inventory usage, is a natural circulation cooldown following the loss of offsite power with a failed closed EFW SG level control valve (LCV). This failure results in an unfed SG and associated stagnant RCS loop. The stagnant RCS loop conditions require a slow and controlled cooldown and depressurization to SIS/RHR entry conditions.

5.4.7.3.3.2 Cooldown Scenario

For the most limiting single failure scenario, with only onsite power available, the cooldown to cold shutdown condition is achieved with use of only safety-related

equipment. The LOOP results in immediate RCP coastdown and termination of the main feedwater supply. Cooldown prior to SIS/RHRS connection is achieved by natural circulation using the main steam relief trains (MSRT), while the steam generators levels are controlled by the emergency feedwater (EFW) system; the EFW system begins operation once the EFW pumps are automatically loaded onto the emergency diesel generators. During cooldown, boron concentration is adjusted as necessary through the use of the extra borating system (EBS). RCS make-up is accomplished by using the medium head safety injection (MHSI) pumps taking suction from the IRWST and by EBS injection flow from the EBS tanks.

The following provides the detailed scenario:

- Reactor and turbine are tripped at 2000 seconds.
- MSRT trains are available all the time.
- EFW Trains 1, 2 and 3 are available all the time. EFW LCV on Train 4 fails closed at the beginning of the transient and stays closed for the duration of the transient. SG 4 has no EFW flow during the transient; however, it can be steamed via its MSRT.
- Reactor Coolant Pumps (RCPs) are tripped at the beginning of the transient and stay tripped for the rest of the transient.
- Pressurizer (PZR) heaters, normal spray, and auxiliary spray systems are not available during the transient.
- PZR makeup/letdown system is not available during the transient. PZR makeup can be performed using the medium head safety injection (MHSI) system and two trains of extra borating system (EBS).
- Turbine bypass system (TBS) is not available and stays closed during the transient.
- Main feedwater (MFW) system trains are not available during the transient.
- MSIVs stay closed during the transient.
- Cooldown is initiated at 17,000 seconds or 15,000 seconds (4.17 hours) after reactor trip (RT). This allows the RCS to remain at the hot standby condition for more than four hours. The cooldown rate is 25°F/hr.
- During cooldown, the RCS pressure is manually controlled by the operator through the safety-related PZR safety relief valve (PSRV). A minimum core exit subcooled margin of 50°F is maintained.
- SIS/RHR entry conditions are achieved when the hot leg fluid temperatures at each non-stagnant loop and the saturation temperature at the stagnant loop is

equal to or less than 350°F, which is the highest allowed for connection of the SIS/RHRS to perform its residual heat removal function.

- The SIS/RHR system is then aligned and the RCS is cooled to cold shutdown conditions.

5.4.7.3.3.3 Cooldown Analysis Results

The analysis starts with a RT from hot full power condition, at which time a LOOP is assumed to occur and de-energize the RCPs. The plant is assumed to maintain hot standby conditions for the first 15,000 seconds, at which time the operator initiates a RCS cooldown.

RCS pressure increases after RT and turbine trip as SG secondary pressure increases to the MSRT setpoint. Shortly afterwards, the pressure stabilizes at hot standby conditions. The pressure then drops after about 30 minutes when EFW is actuated on low SG level followed by an increase and then stabilizes. At approximately 5,000 seconds, SGs 1, 2, and 3 are returned to normal level and EFW level control becomes active, except for SG 4 which has boiled dry.

At 15,000 seconds, a 25°F/hr cooldown is initiated using the MSRTs to reduce secondary side pressure and the PSRV is manually cycled to decrease RCS pressure while maintaining the core exit subcooling margin between 50 and 75°F.

When the RCS pressure is decreased to the saturation pressure of the hot water in the stagnant RCS loop, some surging of pressurizer level occurs; however, the level stays within scale and there is no discharge of liquid water from the PSRV.

SIS/RHR operation entry conditions are met when primary temperature is below 350°F and primary pressure is below 400 psia at about 62,400 seconds after RT, or 47,400 seconds after the initiation of the cooldown. Curves showing pertinent information for the cooldown to RHR entry conditions information are provided in Figures 5.4-13 through 5.4-18.

Figure 5.4-5—RCS Cooldown for Two Train SIS/RHRS Shutdown Cooling Operation (with Only Onsite Power Available) conservatively shows the cooldown time for an SIS/RHRS connection at a much earlier entry time of between approximately three to five hours. The cooldown time, with full flow through the LHSI heat exchangers, from approximately 350°F to 200°F (cold shutdown condition) is around three hours.

5.4.7.3.3.4 Conclusion

The cooldown analysis demonstrates that the plant can be cooled to cold shutdown conditions in a reasonable time following the BTP 5-4 functional requirements. The

bounding EFW water inventory required to reach SIS/RHR entry conditions is approximately 365,000 gallons.

Cold shutdown conditions are reached at approximately 20.3 hours after reactor trip.

5.4.7.4 Inspection and Testing Requirements

Refer to Section 14.2 (Test #016, Test #017 and Test #161) for initial plant testing.

The installation and design of the SIS/RHRS provides accessibility for periodic testing and in-service inspection. Section 3.9.6, Section 5.2.4 and Section 6.6 address the preservice and in-service testing and inspection programs for the SIS/RHRS.

5.4.7.5 Instrumentation Requirements

Controls for the major electrical equipment that is required to establish and initiate, control and terminate the shutdown cooling function of the SIS/RHRS are available in the MCR. Indications required for operation of the shutdown cooling function of the SIS/RHRS, such as flow, pressure, and temperature, are displayed in the MCR.

Automatic protection (shutdown or isolation) of the affected SIS/RHRS train or equipment occurs, unless an initiation signal from the protection system (indicating accident conditions) is present, in the event of such adverse conditions as a break in an RHR train outside containment, or low loop level or low delta-P_{sat} during RHR. Operator intervention to protect the affected SIS/RHRS equipment is required in the event that alarms indicate unacceptable parameters such as high bearing oil, motor winding, or motor air temperatures. These indications are available in the MCR.

No automatic features other than parametric range controls, such as temperature dependent HX bypass flow control, and equipment protection interlocks, such as the low suction pressure trip for the LHSI pumps, are incorporated for operation of the shutdown cooling function for the SIS/RHRS. The shutdown cooling function of the SIS/RHRS must be initiated and terminated by deliberate manual action. Operation of the SIS/RHRS is performed from the MCR for all operating conditions. Refer to Section 6.3 for details of the automatic and manual actions associated with the LHSI function of the SIS/RHRS.

5.4.8 Not Used in U.S. EPR Design

5.4.9 Not Used in U.S. EPR Design

5.4.10 Pressurizer

The pressurizer regulates the RCS pressure during steady-state operation and system transients by maintaining a saturated water-steam mixture in the pressurizer. The pressurizer connects to the RCS through a surge line via the hot leg of RCS Loop 3.

The surge line allows continuous coolant volume and pressure adjustments between the pressurizer and the RCS.

The pressurizer uses sprays to reduce pressure by quenching the pressurizer steam bubble, and uses electrical heaters to heat the water and maintain a saturated condition.

For overpressure protection of the RCS, the pressurizer is equipped with three PSRVs. Refer to Section 5.2.2 for a description of overpressure protection.

5.4.10.1 Design Basis

The pressurizer is part of the RCPB and is designed to ASME Section III, Class 1 requirements. Component classifications are presented in Section 3.2.

The pressurizer vessel is sized to fulfill the following volume and pressure control requirements:

- Accommodate coolant expansion and contraction between 0 and 100 percent of rated thermal power (RTP) to limit RCS mass removal and addition.
- Minimize RCS pressure decrease following a reactor trip during normal operations to avoid a safety injection system (SIS) actuation.
- Minimize RCS pressure increase during normal operations to prevent a high pressurizer pressure reactor trip.
- Maintain RCS pressure to provide adequate reactor coolant subcooling.
- Preclude PSRV opening during normal operational transients.

The surge line is sized to provide an allowable pressure drop between the pressurizer and the RCS during AOOs and postulated accidents.

The PSRVs provide overpressure protection for the reactor coolant system. The PSRVs are addressed in Section 5.4.13. Overpressure protection is addressed in Section 5.2.2.

Two PDS valves and their isolation valves are used for severe accident management as described in 19.2. All valves in the PDS train are normally closed. Each PDS valve has an isolation valve to ensure RCPB integrity in the event of a single failure.

5.4.10.2 Design Description

5.4.10.2.1 Construction

The pressurizer is a cylindrical vessel constructed of low-alloy ferritic steel with an inner stainless steel cladding, as shown in Figure 5.4-6—Pressurizer Assembly. It is closed at both ends by ferritic steel hemispherical heads also clad with stainless steel.

The center of the bottom head has a forged surge line nozzle. This nozzle is connected to the surge line, described in Section 5.4.3, which extends to the hot leg of RCS Loop 3. A thermal sleeve at the bottom of the pressurizer protects the surge line nozzle and weld from thermal shock. Within the pressurizer, a screen just above the nozzle inlet prevents foreign matter in the pressurizer from passing to the RCS.

Electric heaters are installed vertically in the bottom head of the pressurizer. The heaters penetrate the head through heater sleeves welded to the pressurizer with partial penetration welds. Flange joints and gaskets prevent leakage between the heaters and sleeves. Inside the pressurizer, the heaters are held by a horizontal support plate mounted on gussets welded to the inside surface of the pressurizer. The support plate deflects reactor coolant entering the pressurizer through the surge line. A central hole in the plate permits access for ISI of the inside of the pressurizer bottom head. The heaters are manufactured and installed for ease of maintenance and replacement.

Three lateral nozzles near the top of the upper cylindrical shell connect to spray lances. Two lances provide the main spray from the cold legs of RCS Loops 2 and 3. The RCPs provide the driving head for the main sprays. The third spray lance provides auxiliary spray. Auxiliary spray water is provided by the CVCS when both main sprays are not operational. The spray lances act as thermal sleeves to protect the pressurizer spray nozzles from excessive thermal loads.

Three nozzles on the pressurizer upper head connect to the three PSRVs. A separate nozzle connects to the primary depressurization valves, addressed in Section 19.2. Water collectors are welded to the inside of the pressurizer upper head at each PSRV nozzle inlet. The collectors collect condensed steam to provide water seals to prevent non-condensable gases from accumulating in the inlet of the PSRVs.

A manway, located in the center of the pressurizer upper head, provides access to the inside of the pressurizer. A gasketed, bolted closure plate secures the manway.

A vent nozzle on the upper head connects to the pressurizer degasification system, the vacuum vent system, and the nitrogen injection system. In addition, the manway forging is fitted with an additional vent penetration that allows for continuous high point venting. The nitrogen system provides inert gas during RCS filling and draining

operations. The vacuum vent connection allows the pressurizer and RCS to be vacuum vented prior to refilling the RCS.

Lower support brackets are provided on the bottom cylindrical shell of the pressurizer and rest on the building structure. Upper restraints, mounted on the building structure at the top cylindrical shell, provide lateral support. Section 5.4.14 describes component supports and restraints.

The material specifications for the pressurizer are provided in Table 5.2-2—Material Specifications for RCPB Components. The principal design parameters for the pressurizer are listed in Table 5.4-5—Pressurizer Design Data.

5.4.10.2.2 Instrumentation

The pressurizer is equipped with eight nozzles for pressurizer level and pressure measurement. Four of the eight nozzles are installed at a single elevation near the upper end of the cylindrical shell above the spray nozzles. The other four nozzles are installed in the bottom head just below the pressurizer heater support plate. The nozzles are welded with partial penetration welds.

An additional instrumentation nozzle at each of the above elevations allows temperature indication of the steam and the liquid volumes. A single sampling nozzle is located in the lower portion of the pressurizer so that reactor coolant can be sampled from the liquid phase.

Section 7.7 describes the instrumentation and control systems associated with pressurizer pressure and level.

5.4.10.2.3 Operation

The RCS pressure control system monitors pressurizer pressure for deviations from the nominal pressure setpoint and maintains pressure within the normal operating pressure band. With the reactor operating at full power, approximately 50 percent of the pressurizer volume is water and 50 percent is steam. The electric heaters maintain the pressurizer in a saturated condition.

Pressurizer heaters are divided into three groups: Group 1, Group 2 and Proportional Group. Groups 1 and 2 are On-Off heaters. They are used for coarse control when the proportional heaters cannot provide enough energy to the pressurizer to maintain pressure. The proportional heaters are used for fine control of pressure within the normal operating band. These heaters are provided with a variable voltage depending of the pressure relationship to the desired setpoint. The heaters are de-energized on low level to prevent possible burn out when the heaters are not covered with cooling water. Table 5.4-6—Approximate RCS Pressure Setpoints shows the pressurizer

setpoints. The heaters work in conjunction with the spray valves to maintain pressurizer pressure within the desired operational control band.

At power, the proportional heaters regulate the pressure at the pressure setpoint. A continuous bypass flow around each of the two normal spray valves prevents spray line thermal shock and maintains boron equilibrium between the pressurizer and the RCS loops. The proportional heaters compensate for this continuous spray flow, as well as pressurizer thermal losses and any degassing flow.

During transient events, pressure can increase with an in-surge to the pressurizer from the RCS. These events are mitigated by the pressurizer spray, which automatically sprays the steam bubble to lower pressure. This prevents a high pressurizer pressure reactor trip (RT) from occurring. Conversely, during pressure decreases caused by out-surge to the RCS, water flashes to steam and heaters are automatically energized to maintain RCS pressure above the low pressurizer pressure RT setpoint.

5.4.10.3 Design Evaluation

The pressurizer is designed to withstand loading combinations as described in Section 3.9.1. Pressurizer nozzles and the areas of the pressurizer adjacent to the nozzles are analyzed for nozzle loads.

Three PSRVs provide overpressure protection of the RCS. The surge line is sized to minimize the pressure drop in the line. The PSRVs are addressed in Section 5.4.13. Overpressure protection is addressed further in Section 5.2.2.

The pressurizer volume is sized to minimize pressure changes and reduce challenges to the PSRVs. The pressurizer spray valves, heaters, PSRVs and the reactor protection system pressure setpoints are presented in Table 5.4-6.

The total electrical power provided to the pressurizer heaters is sufficient to heat the pressurizer faster than the RCPs heat the reactor coolant in the rest of the RCS so as not to limit the RCS heat up rate. The proportional heater control power is above the required capacity to compensate for pressurizer heat losses during normal operation.

The pressurizer heaters supplied from emergency electrical power have sufficient capacity to compensate for pressurizer losses during a loss of offsite power. The pressurizer heater groups and their capacities are listed in Table 5.4-7—Pressurizer Heater Capacities. The pressurizer heater power supplies are addressed in Section 8.3.1.2.10.

5.4.10.4 Inspection and Testing Requirements

Pressure testing is performed on all pressure retaining components in accordance with the requirements of the ASME Section III. Non-destructive examination (NDE) is

performed prior to and during fabrication of the pressurizer in accordance with the requirements of the ASME Section III.

The pressurizer design permits preservice examinations in accordance with ASME Section III and an inspection program in accordance with ASME Section XI. The thermal insulation for the pressurizer is removable in areas subject to ISI. The ISI of the RCPB is addressed in Section 5.2.4. The radiological considerations for pressurizer maintenance are addressed in Section 12.4.

The shape and slope of the welded parts, including safe-end-to-nozzle welds, allow performance of both radiographic and ultrasonic examination. Nozzle-to-head welds are sufficiently remote from other welds to allow the required ultrasonic examination.

5.4.11 Pressurizer Relief Tank

The pressurizer relief tank (PRT) collects and condenses the steam discharged from the pressurizer through the PSRVs and the primary depressurization system (PDS) valves. The pressurizer relief system piping routes the discharge from the valves to the PRT.

Section 5.4.13 describes the PSRVs. Section 19.2 addresses the PDS valves.

5.4.11.1 Design Bases

The pressurizer relief system and the PRT are non-safety-related. The PRT and the pressurizer relief system piping are designed to Seismic Category II requirements to prevent adverse impacts on safety-related systems in the event of an earthquake. The requirements for Seismic Category II structures, systems and components (SSC) are presented in Section 3.2 (GDC 2).

The PRT and associated rupture disks are sized and located to prevent unacceptable damage to safety-related systems or components resulting from missile generation or adverse environmental conditions (GDC 4).

The PRT isolates radioactive materials from the rest of the containment environment to limit contamination and to maintain personnel dose as low as reasonably achievable.

The PRT is designed to process 110 percent of the steam present in the pressurizer at full-power conditions without challenging the rupture disks or the design temperature of the PRT. This load on the PRT encompasses all step load decreases and a PZR discharge resulting from the turbine trip transient described in Section 15.2, which is the limiting pressurizer discharge for an anticipated operational occurrence. Section 5.2.2 describes the overpressure protection function of the PSRVs.

The PRT design incorporates two rupture disks that protect the PRT from overpressurization. The flow area of one rupture disk is larger than the PSRV discharge pipe and greater than what is required to handle the full flow rate of three PSRVs. The rupture disks prevent the PRT pressure from exceeding the design limits.

Section 3.2 identifies the RCS component classifications. Table 5.4-8—Pressurizer Relief Tank Design Parameters contains the primary design parameters for the PRT.

5.4.11.2 System Description

Figure 5.1-4 contains the pressurizer relief system and the PRT, including associated piping for filling, venting and draining, and for gas extraction to the gaseous waste processing system, described in Section 11.3.

The PSRVs and PDS valves discharge through individual lines that are joined to a common header and routed to the PRT. The discharge piping slopes down to the PRT in order to avoid water stagnating in the pipes at the valve outlets. The discharge piping terminates with sparger nozzles located in the bottom of the PRT, below the normal water line.

The PRT is a horizontal, cylindrical tank located in the Reactor Building. The general configuration of the austenitic stainless steel tank is shown in Figure 5.4-7—Pressurizer Relief Tank.

Under normal conditions, the PRT contains water and a nitrogen gas blanket. A spray header in the upper portion of the PRT provides cooling water from the drain and vent recirculation cooling system and makeup water from the demineralized water system. The gaseous waste processing system supplies nitrogen through the pressurizer relief discharge lines and extracts gases through an extraction line connected to the PRT. The PRT is normally maintained at a slight vacuum.

Two rupture disks prevent the PRT pressure from exceeding 300 psid. The discharge of the rupture disks is directed towards an opening in the floor of the cubicles for RCPs two and three (RCP bunker). The discharge is routed such that any flow will not impact any safety-related components in the cubicle.

A vacuum breaker on the pressurizer relief system piping prevents water from the PRT from being drawn through the sparger and up the relief line when steam in the relief line is condensed after a relief valve actuation.

5.4.11.3 Performance Evaluation

The PRT volume is sufficient to handle the design transient steam discharge without challenging the rupture disks and without exceeding the design pressure and temperature. The tank sizing calculation assumes an initial PRT liquid temperature of

130°F and PRT pressure of 0 psig, and a normal water volume initially in the PRT. The final PRT pressure for the design transient is less than or equal to 145 psia and the final temperature remains below the saturation temperature.

The tank design pressure of 350 psig and design temperature of 435°F provides a conservative margin above the calculated final conditions for the design transient. The rupture disks prevent the tank pressure from exceeding design conditions and can pass the combined flow rate of the three PSRVs. The PRT and rupture disks are designed for full vacuum so that the tank will not collapse if the contents are cooled following a discharge of steam without the addition of nitrogen. The PSRV and PDS valve discharge piping is designed for pressures and temperatures anticipated during design basis events.

The PSRV discharge piping is sized so that the backpressure in the discharge system does not impede the overpressure protection function. The PSRV discharge piping is restrained to prevent damage to the PSRVs in the event of a rupture. Section 3.6.2 describes the application of pipe whip restraints.

Functional failure of the non-safety-related PRT and associated piping has no impact on safe plant shutdown. The PRT and associated piping are located so that:

- A failure will not preclude essential operations of safety-related systems.
- PRT rupture disks are not a missile threat to safety-related equipment.

Section 3.5 addresses protection against internally generated missiles for safety-related systems and components. Section 3.8.1 contains general arrangement and layout drawings for structures and systems.

5.4.11.4 Inspection and Testing Requirements

The PRT is subject to testing during construction in accordance with the ASME Section VIII, Division 1. Periodic visual inspections and preventive maintenance are conducted on the PRT during plant shutdowns in accordance with industry practice.

5.4.11.5 Instrumentation Requirements

The PRT is designed with instrumentation nozzles for pressure, level and temperature measurements. The MCR alarms indicate high pressure, temperature, and high and low water levels. The instrumentation nozzles are located to allow measurements in both the liquid and gaseous phases.

Temperature indications in the PRT detect a leaking PSRV or PDS valve.

5.4.12 Reactor Coolant System High Point Vents

The reactor coolant system is equipped with post-accident high point vents to remove non-condensable gases from the RPV and the RCS if such action is warranted for beyond design basis accident mitigation efforts. The high point vents are not required for the mitigation of any design basis events.

5.4.12.1 Design Bases

In accordance with the requirements of 10 CFR 50.34(f)(2)(vi) and 10 CFR 50.46a, the U.S. EPR is provided with high point vents to remove non-condensable gases from the RPV. High point venting is not necessary to provide safety-related core cooling following any postulated design basis accident.

The post-accident high point vent valves fail in a closed position and both parallel vent paths have two vent valves in series to minimize the possibility of a stuck open vent path. In addition, the post-accident high point vents are designed with a flow restricting orifice so that one CVCS pump can make up the coolant volume lost in the event that the high point vent valves do not close. These design features minimize the possibility of an inadvertent vent actuation, allow isolation in case of an inadvertent vent actuation and, in the rare case of the inability to isolate the vent path, the flowrate is restricted to the point that it is not considered a LOCA.

The post-accident high point vents are designed, fabricated, erected, tested and maintained to high quality standards in accordance with Appendix B to 10 CFR Part 50, 10 CFR 50.55a and GDC 1, 14 and 30. They meet applicable requirements for single failure protection and environmental qualification.

Each post-accident high point vent valve is powered from a separate Class 1E division (GDC 17, GDC 34), that can be alternately fed (8.3.1.1.1),to provide reliable power to vent the RPV in the event that one train is de-energized for maintenance and another train is de-energized by fault. This design also prevents inadvertent actuation of a vent if a fault occurs in a vent power source.

The post-accident high point vent valves are remotely operable from the control room in accordance with the requirements of 10 CFR 50.46a and positive valve position indication is provided in the MCR (GDC 19).

The post-accident high point vents are designed to permit ISI as described in Section 5.2.4 and IST as described in Section 3.9.6.

Control of combustible gases in accordance with 10 CFR 50.44 is described in Section 6.2.5.

5.4.12.2 Design Description

The post-accident high point vents connect to a branch tee in the RPV high point vent line, which is used during shutdown and startup operations for RCS venting and sweeping, upstream of the RPV high point vent isolation valves. The configuration is shown in Figure 5.1-4.

The post-accident high point vents branch into two parallel flow paths with each vent path containing two solenoid-operated isolation valves in series to allow for isolation of the vent path in the event that one valve fails to close. The isolation valves are fail-closed, normally closed valves. Each isolation valve is powered from a separate Class 1E division.

Both flow paths merge into a common line, which discharges to the nearest SG cubicle through an orifice sized to prevent a discharge flowrate exceeding the capacity of one CVCS pump. The SG cubicle is equipped with rupture and convection foils at the top to allow circulation of air for adequate mixing of any combustible gases with the containment atmosphere.

The high point vents form part of the RCPB and are designed and fabricated in accordance with ASME Boiler and Pressure Vessel Code (Reference 1), Section III, Class 1 requirements. Post-accident high point vent component classifications are presented in Section 3.2.

5.4.12.3 Safety Evaluation

The post-accident high point vents are not required following any postulated design basis accident. They are provided to remove non-condensable gases during beyond design basis accident mitigation efforts. The design and construction of the high post-accident high point vents comply with all applicable industry codes and standards. Refer to Section 3.10 and Section 3.11, respectively, for seismic and environmental qualification of equipment.

The post-accident vents, from the branch tee to the discharge orifice, are designed to operate at a differential pressure between RCS design pressure and containment atmospheric pressure, and are designed to withstand the design transients identified in Section 3.9.1. The design and analysis of vent piping is performed as described in Section 3.9.3.

The redundancy of the two independently powered, normally closed isolation valves in each of the post-accident high point vent paths precludes the possibility of a single failure causing inadvertent opening or preventing isolation of either of the vent paths and also assures the capability to open a vent path if required. The solenoid-operated isolation valves fail closed on loss of power to isolate the pressure boundary.

The post-accident high point vent discharge orifice is sized to prevent a discharge flow exceeding the capacity of one CVCS pump so that if the high point vent valves fail to close, CVCS can makeup the lost volume without actuation of the emergency core cooling systems. The orifice is located downstream of the vent valves to minimize flow induced shock to the vent valves and piping.

5.4.12.4 Inspection and Testing Requirements

The general installation and design of the RCS provides accessibility for the performance of periodic testing and ISI. The design and arrangement of the post-accident high point vent piping allows access for testing or examination with limited personnel exposure. Periodic testing of the post-accident high point vent verifies its availability and ability to fulfill its functions.

Section 3.9.6, Section 5.2.4 and Section 6.6 describe preservice and inservice testing and inspections.

5.4.12.5 Instrumentation Requirements

The high point vent valves can be operated remotely from the control room, with positive valve position indication provided.

The U.S. EPR human factors analysis is presented in Chapter 18. Control room displays and controls for the high point vent valves, along with associated emergency procedures and training, are designed to avoid increasing the potential for operator error. Instrumentation described in Section 7.1.1 provides indication of water level in the RPV.

5.4.13 Safety and Relief Valves

Three PSRVs provide overpressure protection for the RCPB during power and low temperature operation. Overpressure protection for the RCPB is addressed in Section 5.2.2.

5.4.13.1 Design Bases

The PSRVs perform the following functions.

- The PSRVs function as an element of the RCPB.
- The PSRVs provide overpressure protection for the RCPB during power and low temperature operation.
- In design basis events, the PSRVs provide depressurization of the RCS in order to achieve cold safe shutdown conditions.

- PSRV design bases related to overpressure protection are presented in Section 5.2.2.

5.4.13.2 Design Description

Three PSRVs are arranged on top of the pressurizer for overpressure protection of the RCPB. Each safety relief valve inlet connects to a nozzle on the pressurizer upper head and each outlet pipe connects to a sixteen inch discharge header approximately 120 feet long. The discharge header collects the discharge of the three PSRVs, and directs the flow to the pressurizer relief tank, as described in Section 5.4.11. Design parameters for the PSRVs are listed in Table 5.4-9—Pressurizer Safety Relief Valve Design Parameters.

Each PSRV assembly is composed of the following:

- A main relief disk.
- A linear position indicator.
- A spring-operated pilot valve.
- Two solenoid-operated pilot valves mounted in series.

During hot conditions, each PSRV is actuated by the spring-operated pilot valve. The spring-operated pilot valve has an impulse line from the pressurizer, an exhaust line, and a vent/drain line. The PSRV is designed as a pilot-operated relief valve per ASME Code Section III, NB-7520, for overpressure protection at power.

Two of the three PSRVs are utilized for cold condition overpressure protection to meet the single failure criterion. The PSRV is designed as a power activated pressure relief valve per ASME Code, Section III, NB-7530, for overpressure protection at low temperature. All three PSRVs are configured with two solenoid-operated valves in series to prevent spurious opening of the PSRV due to a failure of one solenoid-operated valve. The solenoid-operated pilot valves in series have a single discharge line.

The spring- and solenoid-operated pilot valves function by providing a discharge path which relieves system pressure on top of the main relief disk. Under normal conditions, system pressure on top of the main relief disk holds the disk in the closed position. When the setpoint is exceeded, the pilot valve unseats and relieves system pressure on top of the main relief disk. Once this pressure is relieved, a large differential pressure across the main relief disk causes it to open. Table 5.4-8—Pressurizer Relief Tank Design Parameters provides a schematic of a PSRV with the attached solenoid- and spring-operated pilot valves.

The accumulation of non-condensable gases at the inlet to each PSRV is limited by the water collector located inside the pressurizer which forms a water seal. The water collector is filled by condensation of the steam in the pressurizer upper head and the inlet of the PSRVs.

The water collector maintains a temperature hot enough that when the PSRV lifts, the water flashes to steam, preventing a cold water slug in the relief piping. Due to heat losses, the water temperature in the collector is lower than the pressurizer steam temperature, which prevents water seal voiding during normal operating transients. During large magnitude pressure transients, voiding of the PSRV inlet pipe may occur. The collector is refilled rapidly when normal pressure is restored and the condensation heat transfer is high.

The PSRVs are designed to operate in steam, two phase mixture, or sub cooled liquid. The quantity of cycles for which the PSRVs are designed to operate is consistent with the transients in Section 3.9 involving RCS overpressure with a pressurizer discharge. Additionally, the PSRVs are designed for the quantity of cycles involving normal plant startup and shutdown, during which time the PSRVs will be tested in accordance with the In-Service Testing Program requirements as described in Section 3.9.6.3.6. The solenoid-operated pilot valves are designed to cycle ten times per minute for thirty continuous minutes. Table 5.2-2 lists material specifications for the PSRVs. Section 3.2 identifies the safety classification, quality group and seismic classification for the PSRVs.

5.4.13.3 Design Evaluation

The design evaluation of the PSRVs is presented in Section 5.2.2.

5.4.13.4 Inspection and Testing Requirements

The installation and design of the RCS provides accessibility for periodic testing and in-service inspection of the PSRVs. In-service testing and inspection requirements comply with the ASME Code for Operation and Maintenance of Nuclear Power Plants (OM Code) and Section XI of the ASME Boiler and Pressure Vessel Code, respectively.

Section 3.9.6 and Section 5.2.4 address the preservice and in-service testing and inspection programs for the PSRVs. Additional information on PSRV testing can be found in Section 5.2.2.

5.4.13.5 Instrumentation Requirements

The PSRVs are instrumented for temperature measurement and have valve stem position indication on both the main relief disk and the solenoid-operated pilot valves. Temperature of the PSRV piping is indicated in the control room to detect steam

discharge or a loss of seal in the pressurizer water collector. The valve stem position is also indicated in the control room.

5.4.14 Component Supports

The RCS supports and restraints control relative displacement of system components due to normal thermal and pressure expansion, and restrict displacement during seismic events and design basis accidents. The component supports also provide deadweight support for RCS components. The RCS piping is supported and restrained by the major RCS components. This section describes the supports and restraints for the primary RCS components.

5.4.14.1 Design Bases

The RCS supports and restraints functions to support and restrain RCS components and connected piping to maintain the integrity of the RCPB and maintain the capability of the components to perform safety-related functions during design basis events, including the SSE.

The RCS component supports described in this section are designed in accordance with the ASME Section III, Subsection NF. The supports are designed to withstand the loading combinations specified in Section 3.9.3, in accordance with RG 1.124 and RG 1.130.

Section 3.6.3 describes the leak-before-break analyses that are used to eliminate from the design basis the dynamic effects of certain RCS pipe ruptures.

5.4.14.2 Design Description

The supports are welded, structural steel sections. The RPV uses plate and shell type supports. Other supports and restraints are of the linear type (tension/compression struts, columns and beams, and snubbers). Embedded anchor bolts or tie rods fix the supports and restraints to the surrounding concrete structures.

5.4.14.2.1 Reactor Pressure Vessel Supports and Restraints

Figure 5.4-9—Reactor Pressure Vessel Support shows the general design of the RPV supports.

The RPV is supported by the eight main coolant loop nozzle forgings, which rest on support blocks incorporated into a support ring. The support ring consists of a lower plate resting on the edge of the reactor pit, a cylindrical ring plate and an upper plate incorporating the support blocks.

The support blocks each contain a recess machined parallel to the nozzle axes allowing free radial expansion of the vessel due to thermal and pressure effects. Eight vertical

keys are welded beneath the lower plate and fit into grooves in the concrete. These keys hold the support ring in place against horizontal loads such as the seismic loads imposed by the SSE. Cooling fins are attached to the keys to remove heat from the support blocks.

Hold-down straps, bolted at each end to the support ring, fasten the nozzles to the support pads. These straps restrain the vessel against uplift forces that could occur during seismic excitation.

5.4.14.2.2 Steam Generator Supports and Restraints

Figure 5.4-10—Steam Generator Supports, shows the general design of the SG supports and restraints.

The SG is supported vertically by four support sections that are fitted with trunnions at each end. The upper articulation is connected to forged integral pads built onto the SG channel head. The lower articulation is connected to the floor by prestressed tie rods.

Two lower restraints (bumpers) accommodate lateral movement of the SGs during normal thermal expansion and restrain their movement in the event of seismic loads. Each restraint consists of a plate bolted to the cubicle wall to which a structural support system is mounted that provides a gap between itself and the SG channel head. The support structure allows adjustment of the gap between the SG and the stops.

Four horizontal sway struts restrain the upper SG shell and accommodate lateral expansion along the RPV-SG axis. Snubbers that are part of two of the restraints are located along this axis. The snubbers limit the velocity of movement and thereby restrain sudden movements caused by an earthquake while permitting slow movements due to expansion or contraction of the loop.

The snubbers mount to ball-jointed end fittings which prevent the formation of moment forces due to off-center lateral loading. The supports bolt to welded brackets at the SG end and the concrete compartment wall at the other end.

5.4.14.2.3 Reactor Coolant Pump Supports and Restraints

Figure 5.4-11—Reactor Coolant Pump Supports, shows the general design of the RCP supports and restraints.

Three support legs or columns hinged to ball-jointed clevises or brackets at each end provide vertical support for each of the RCPs. The ball joints accommodate horizontal movement of the pumps. The support spacing accommodates routing of the RCS piping without compromising support stability.

Each RCP motor is supported by a motor stand bolted to the pump casing. The motor stands each have two horizontal restraints with snubbers, located 90 degrees apart, which extend from the motor stand to the RCP bunker wall. The restraints attach to the wall via an anchor plate with threaded rods embedded in the concrete.

5.4.14.2.4 Pressurizer Supports and Restraints

Figure 5.4-12—Pressurizer Supports shows the general design of the pressurizer supports and restraints.

Three support brackets welded to the pressurizer lower cylindrical shell mount to a support assembly anchored to the compartment floor. This arrangement accommodates free thermal radial expansion while maintaining the central axis fixed relative to the supporting structure.

Eight restraints arranged around the upper portion of the pressurizer allow radial thermal expansion while maintaining stability against seismic forces or pipe breaks.

5.4.14.2.5 Surge Line Supports

The pressurizer surge line is supported by its welded joints at the RCS hot leg and the pressurizer lower head. Spring devices (hangers) support the deadweight of the surge line in two locations.

5.4.14.2.6 Control Rod Drive Mechanism Housing

The control rod drive mechanisms (CRDM) are described in Section 3.9.4. Figure 3.9.4-1 shows the general design of the CRDM.

The CRDM assemblies interface with the RPV Closure Head. The interface is at the CRDM assembly flange and the CRDM Adapter flange. The CRDM assemblies are seismically supported by the adapters. The adapters penetrate and are welded to the RPV closure head. The adapters are described in Section 5.3.3 and shown in Figure 5.3-4. The CRDM assemblies also interface with RPV-closure head equipment (RPV-CHE). The interface is between the CRDM displacement limiter located on top of the assembly and the ejection locking cross of the RPV-CHE as shown in Figure 3.9.4-1. The interface limits movement of the CRDM assemblies during a seismic event.

5.4.14.3 Design Evaluation

The RCS component supports are designed to withstand the loading combinations and loading values specified in Section 3.9.3 for deadweight, thermal expansion, SSE, and design basis event loads, in accordance with RG 1.124 and RG 1.130. Section 3.9.3 describes the evaluation of the structural integrity of RCS components, piping and component supports.

5.4.14.4 Inspection and Testing Requirements

Preservice and ISIs of the supports and restraints are conducted in accordance with the ASME Section XI, Subsection IWF. Snubbers are inspected in accordance with the ASME Code for Operation and Maintenance of Nuclear Power Plants (OM Code).

The locations of the supports and restraints allow access to components and piping for ISI. The RCS supports and restraints are designed so that all maintenance and ISI can be performed while maintaining personnel exposure as low as reasonably achievable.

5.4.15 References

1. ASME Boiler and Pressure Vessel Code, The American Society of Mechanical Engineers, 2004.
2. ASME PTC 8.2, "Centrifugal Pumps," The American Society of Mechanical Engineers, January 1990.
3. NEMA MG-1, "Motors and Generators," National Electrical Manufacturers Association, 2004.
4. ASTM E 1820-05a, "Standard Test Method for Measurement of Fracture Toughness," American Society for Testing and Materials, December 2005.
5. EPRI Report 1003138, "Steam Generator Examination Guidelines," Electric Power Research Institute, October 2002.
6. EPRI Report 1006783, "Steam Generator Tubing Burst Testing and Leak Rate Testing Guidelines," Electric Power Research Institute, December 2002.
7. EPRI Report 1007904, "Steam Generator In Situ Pressure Test Guidelines," Revision 2, Electric Power Research Institute, August 2003.
8. EPRI Report 1012987, "Steam Generator Integrity Assessment Guidelines," Electric Power Research Institute, July 2006.
9. EPRI Report TR-109495, "PWR Steam Generator Tube Plug Assessment Document," Electric Power Research Institute, December 1997.
10. NEI 97-06, "Steam Generator Program Guideline," Revision 2, Nuclear Energy Institute, May 2005.
11. EPRI Report 1014986, "Pressurized Water Reactor Primary Water Chemistry Guidelines," Revision 6, Electric Power Research Institute, December 2007.
12. EPRI Report 1008224, "Pressurized Water Reactor Secondary Water Chemistry Guidelines," Revision 6, Electric Power Research Institute, December 2004.
13. ASME "Code for Operation and Maintenance of Nuclear Power Plants," The American Society of Mechanical Engineers, 2004.

14. ANSI/IEEE Std 603-1998, “IEEE Standard Criteria for Safety Systems for Nuclear Power Generating Stations,” American National Standards Institute/ Institute of Electrical and Electronics Engineers, 1998.

15. EPRI Report 1008219, “EPRI PWR Primary-to-Secondary Leak Guidelines, Revision 3,” Electric Power Research Institute, December 2004.

16. NRC Generic Letter 88-17, “Loss of Decay Heat Removal,” U.S. Nuclear Regulatory Commission, October 17, 1988.

17. SECY 93-087, “Policy, Technical, and Licensing Issues Pertaining to Evolutionary and Advanced Light Water Reactor (ALWR) Designs,” U.S. Nuclear Regulatory Commission, April 2, 1993.

18. SECY 90-016, “Evolutionary Light Water Reactor (LWR) Certification Issues and their Relationship to Current Regulatory Requirements,” U.S. Nuclear Regulatory Commission, January 12, 1990.

19. ANP-10294P, Revision 1, "U.S. EPR Reactor Coolant Pump Motor Flywheel Structural Analysis Technical Report," March 2009.

Table 5.4-1—Reactor Coolant Pump Design Data

Parameter	Value
Number of Units	4
Design Pressure	2535 psig
Design Temperature	664°F
Normal Operating Shaft Speed, nominal	1190 rpm
Best Estimate Flow	124,741 gpm
Best Estimate Dynamic Head	349.2 ft
NPSH Required (at design flow)	134.1 ft
Water Volume (each) (ft^3) nominal	137.7 ft^3
Weight total (pump, motor) (dry, lb) nominal	297,400 lb
Weight total (pump and motor assembly) (with water and oil, lb) nominal	309,750 lb
Minimum Rotating Inertia (pump and motor assembly)	195,989 lbs-ft^2
Motor Synchronous Speed	1200 rpm
Voltage (Rated Motor Terminal)	13,200 V
Voltage (Nominal System)	13,800 V
Voltage (Minimum Starting at Terminals)	10,560 V
Phase	3
Frequency	60 Hz

Table 5.4-2—Steam Generator Design Data

Parameter	Design Value
Design pressure, reactor coolant side	2535 psig
Design pressure, steam side	1435 psig
Design temperature, reactor coolant side	664°F
Design temperature, steam side	592°F
Steam outlet flow limiter area	1.39 ft^2
Total heat transfer surface area	85,681 ft^2
Number of U-tubes	5980
U-tube outside diameter	0.750 in
Tube wall nominal thickness	0.043 in
Minimum tubesheet thickness	24.41 in

Table 5.4-3—Non-Pressure Boundary Steam Generator Materials

Parameter	Design Value
Components	SA-240 Type 410
	Martensitic stainless steel

Table 5.4-4—Reactor Coolant System Piping Design Parameters

Design Parameter	Value
Main Coolant Lines	
Inside diameter	30.71 in.
Nominal wall thickness	3.0 in.
Design pressure	2535 psig
Design temperature	664°F
Pressurizer Surge Line	
Inside diameter	12.81 in.
Nominal wall thickness	1.59 in.
Design pressure	2535 psig
Design temperature	684°F
Maximum in-surge pressure loss	72.5 psid
Pressurizer Spray Lines	
Nominal pipe size	4 in,
Schedule	160
Design pressure	2535 psig
Design temperature	684°F
Post-Accident High Point Vent Line	
Design Pressure	2535 psig
Design Temperature	664°F

Table 5.4-5—Pressurizer Design Data

Design Parameter	Value
Design pressure	2535 psig
Design temperature	684°F
Nominal operating pressure	2235 psig
Nominal operating temperature	653°F
Minimum internal volume	2649 ft^3
Approximate volume at 75% indicated level	1858 ft^3
Minimum steam volume	883 ft^3
Maximum spray flow (total of both spray lines)	132.2 lb_m/s
Continuous spray flow (per normal spray line)	0.77 lb_m/s
Vessel nominal inside diameter	9.25 ft

Table 5.4-6—Approximate RCS Pressure Setpoints

Parameter	Value
Safety relief valve setpoint	2550 psia
Reactor trip–High pressure	2415 psia
Spray valve–Full open	2350 psia
Spray valve–Starts to open	2275 psia
Proportional heater start pressure	2265 psia
Normal operating pressure	2250 psia
Proportional heater–Full on	2234 psia
Group 1 heaters reset–Off setpoint on increasing pressure	2234 psia
Group 1 heaters–On setpoint on decreasing pressure	2205 psia
Group 2 heaters reset–Off setpoint on increasing pressure	2205 psia
Group 2 heaters–On setpoint on decreasing pressure	2176 psia
Reactor trip–Low hot leg pressure	2005 psia
SIS actuation signal	1670 psia

Table 5.4-7—Pressurizer Heater Capacities

Group	Power
Proportional heaters	720 kW
Group 1 heaters	576 kW
Group 2 heaters	1296 kW
Minimum total pressurizer heater capacity	2500 kW
Minimum heater capacity to compensate for pressurizer losses during an LOOP (Provided by any two emergency Heater Groups	288 kW
Total minimum emergency heater available (Twice the minimum required emergency heater capacity)	576 kW

Table 5.4-8—Pressurizer Relief Tank Design Parameters

Parameter	Value
Approximate total free volume	1413 ft^3
Normal water volume	1095–1165 ft^3
Design pressure	350 psig
Design temperature	435°F
Normal operating pressure	<14.7 psia
Normal operating temperature	≤130°F
Single rupture disk diameter	28 in
Rupture disk set pressure	300 psid

Table 5.4-9—Pressurizer Safety Relief Valve Design Parameters

Number	3
Minimum relief capacity at set pressure	661,400 lb_m/hr per PSRV
Design temperature	684°F
Design pressure	2535 psig
Throat Area[1]	4.6 in^2
Power operation setpoints	2535 ± 1% psig
Low temperature operation setpoints	525 psig, 541 psig
Maximum opening time (including pilot valves)	0.7 sec

Note:

1. The throat area of the PSRV is a calculated value based on the minimum relief capacity at the set pressure for power operation.

Figure 5.4-1—Reactor Coolant Pump and Subassemblies

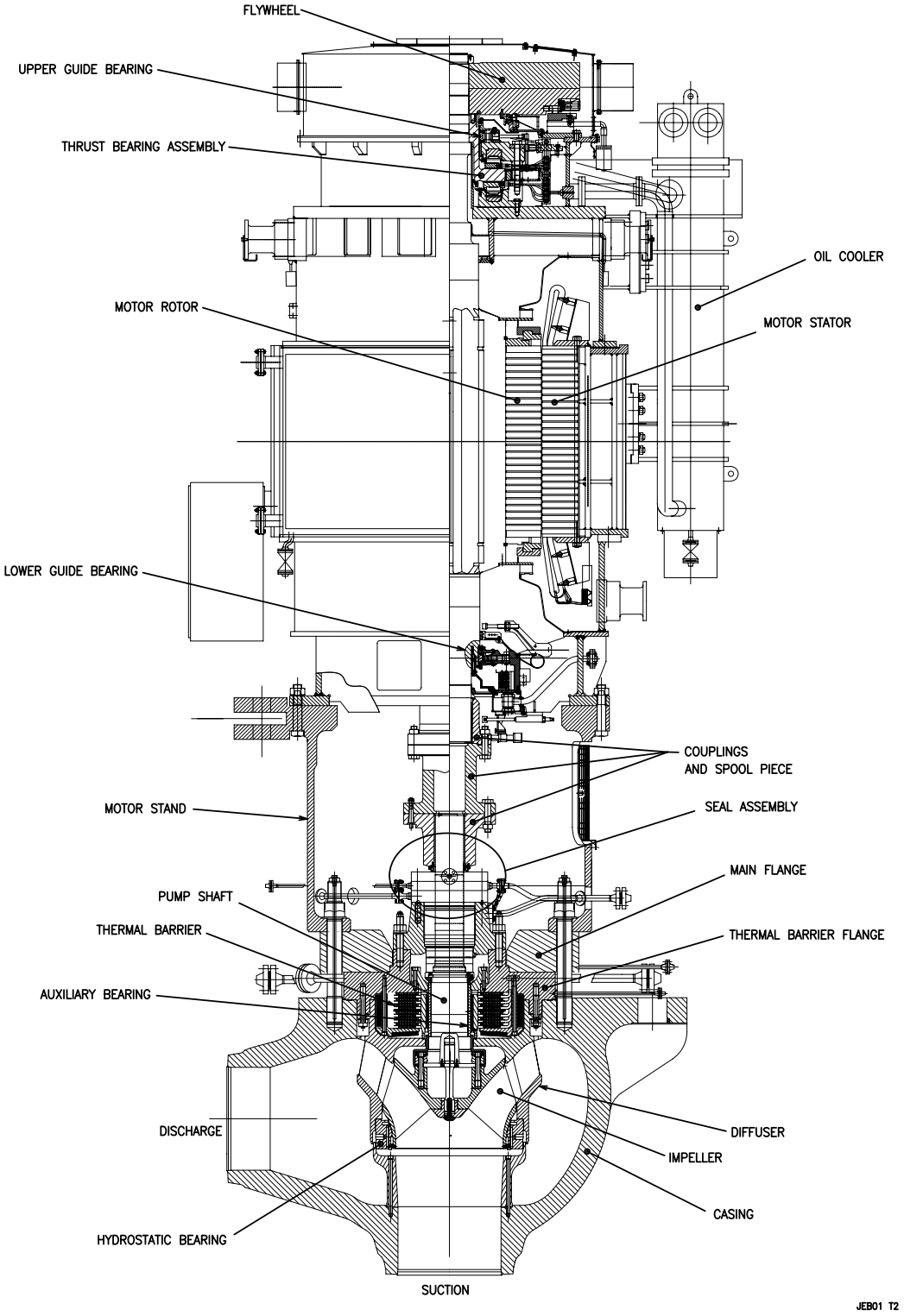

Figure 5.4-2—Steam Generator Elevation

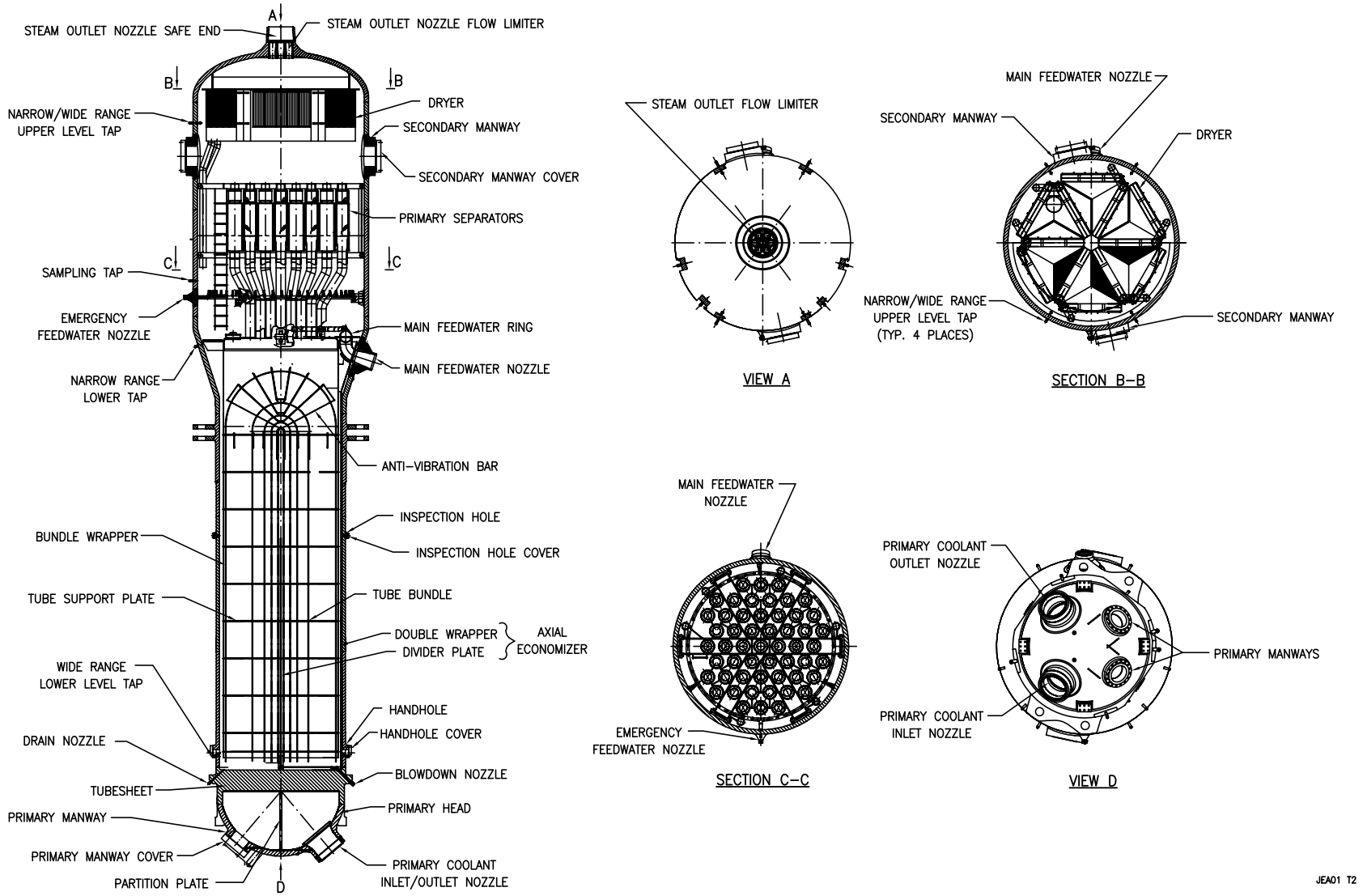

Figure 5.4-3—RCS Cooldown for Four Train SIS/RHRS Shutdown Cooling Operation

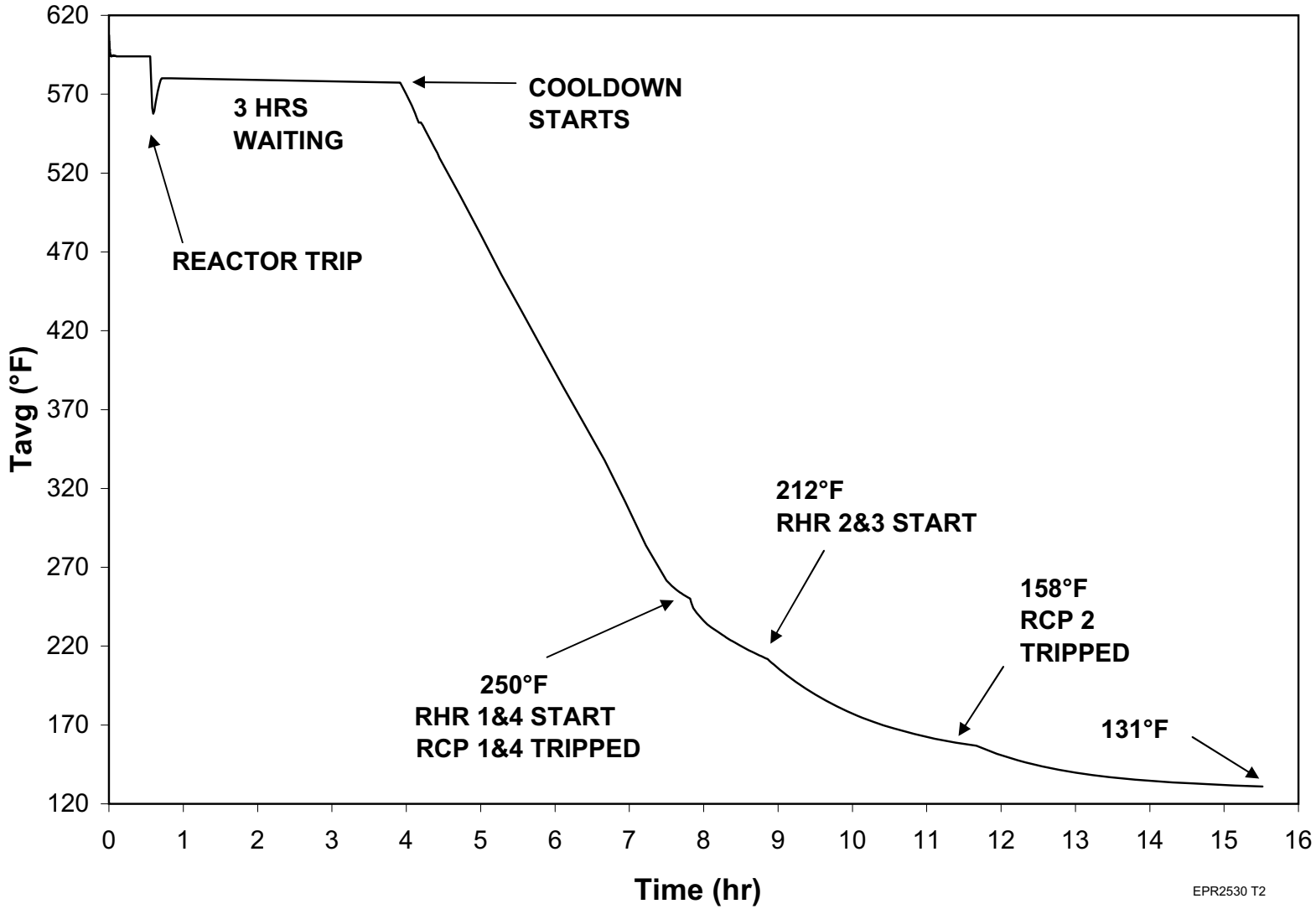

Figure 5.4-4—RCS Cooldown for Two Train SIS/RHRS Shutdown Cooling Operation (with Offsite Power Available)

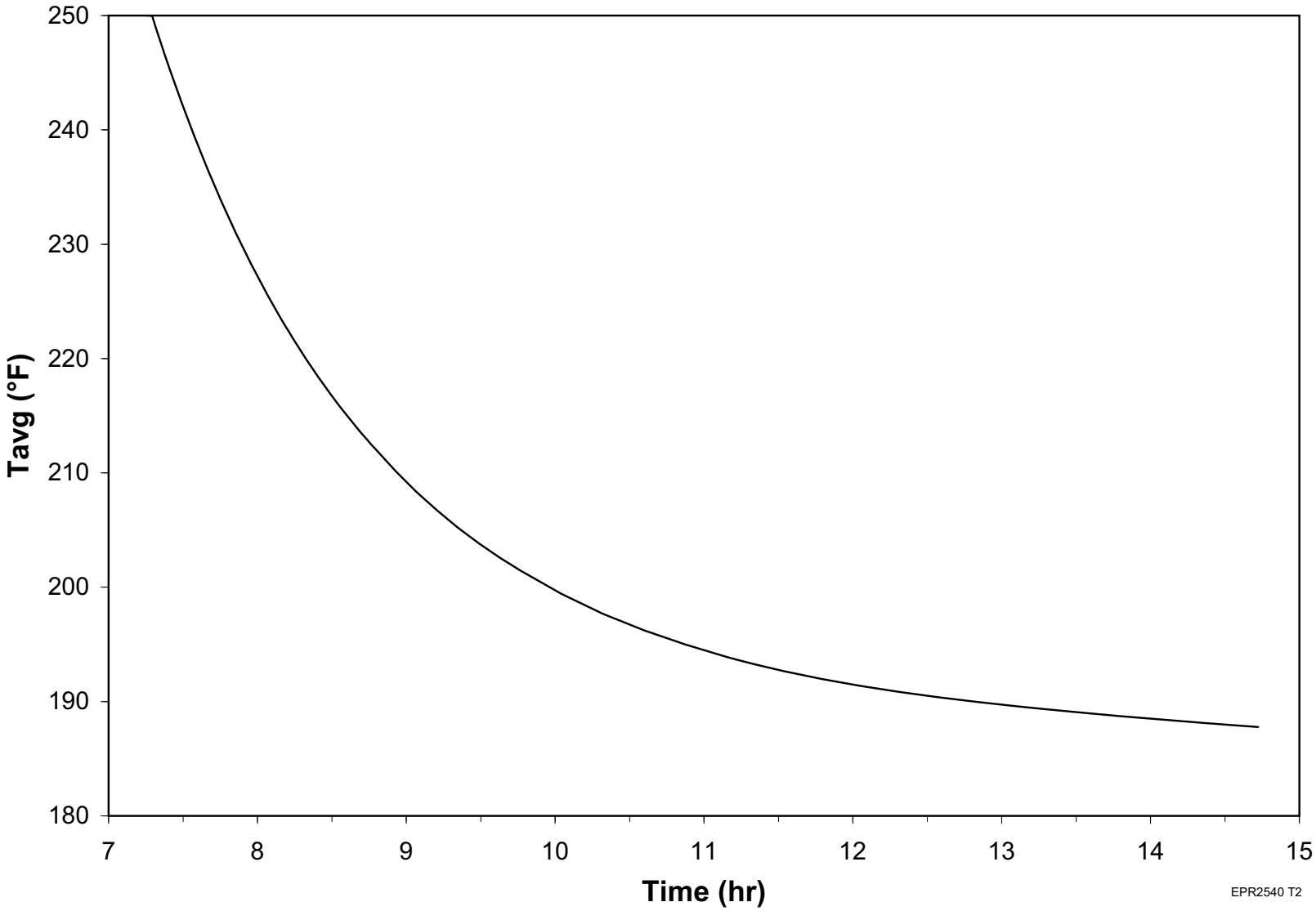

Figure 5.4-5—RCS Cooldown for Two Train SIS/RHRS Shutdown Cooling Operation (with Only Onsite Power Available)

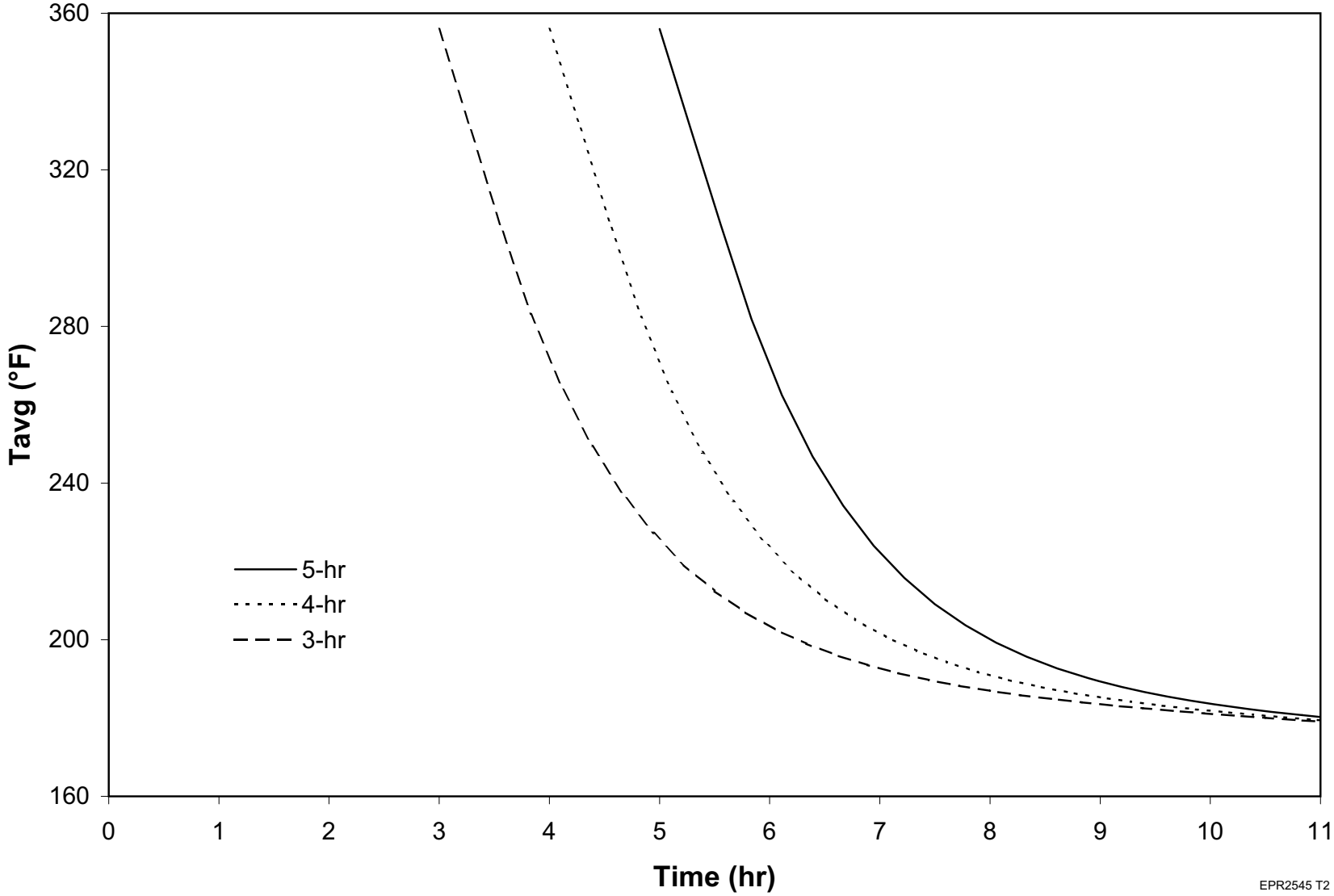

Figure 5.4-6—Pressurizer Assembly

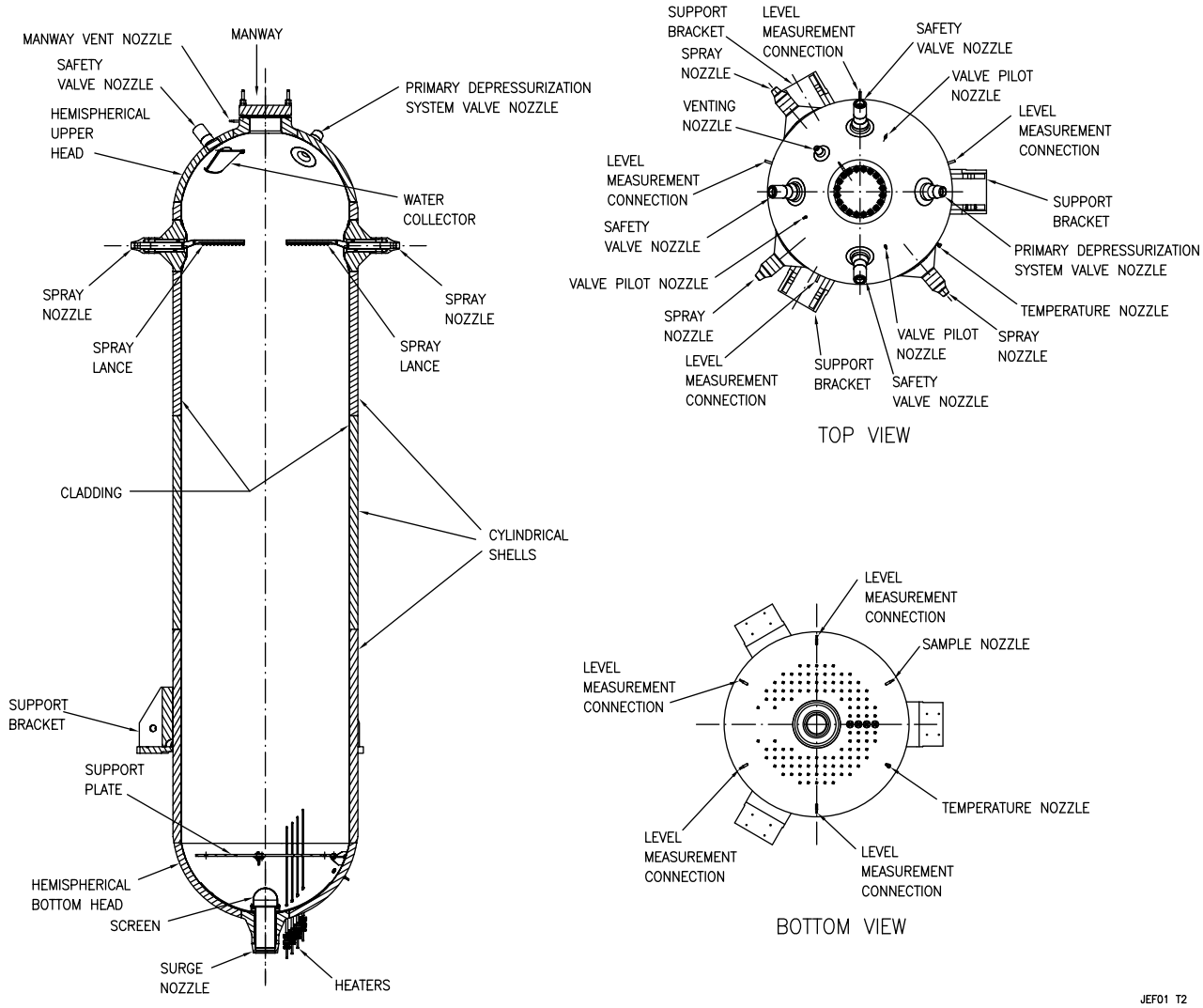

Figure 5.4-7—Pressurizer Relief Tank

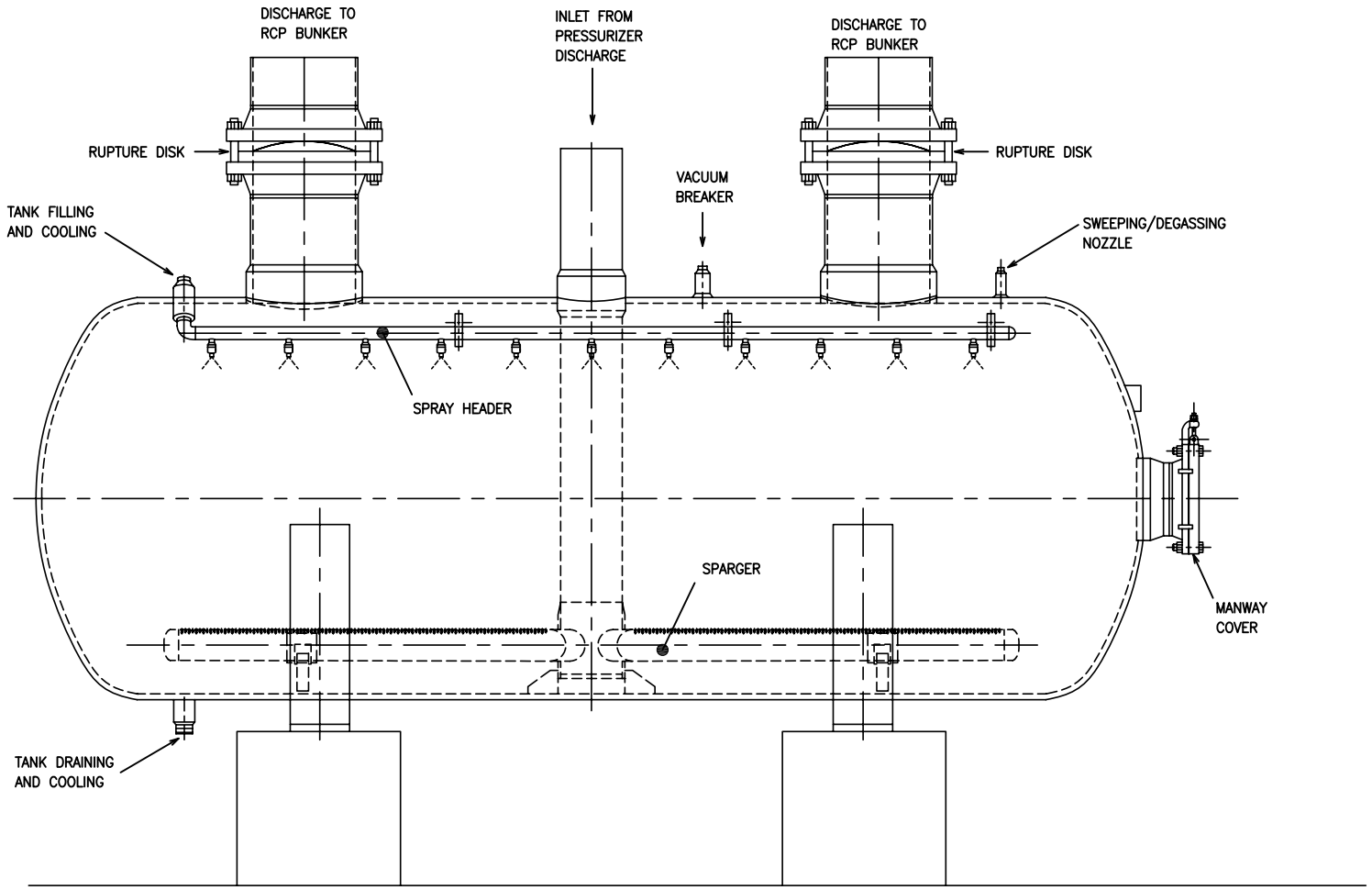

JEG01 T2

Figure 5.4-8—Pressurizer Safety Relief Valve Schematic

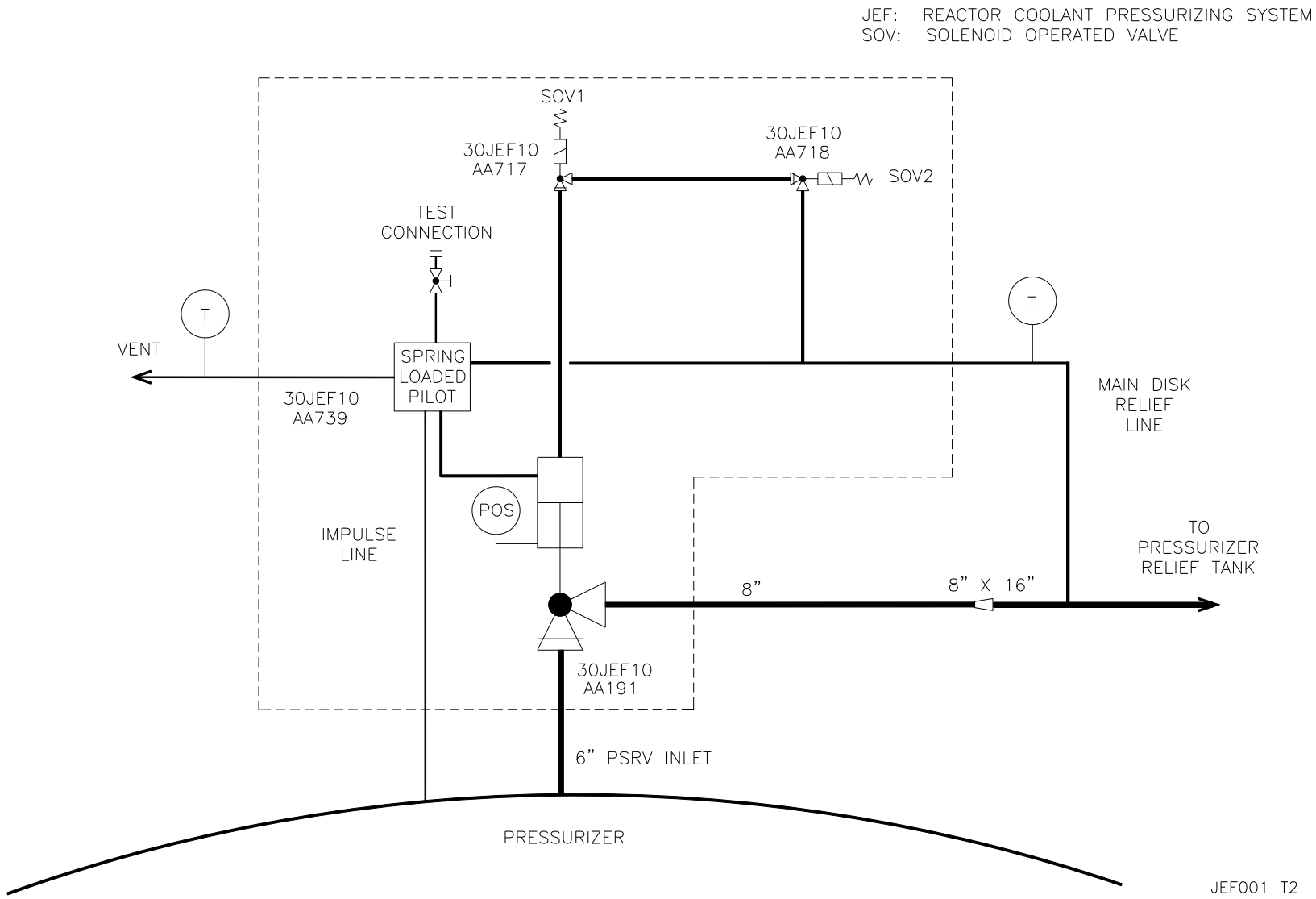

Figure 5.4-9—Reactor Pressure Vessel Support

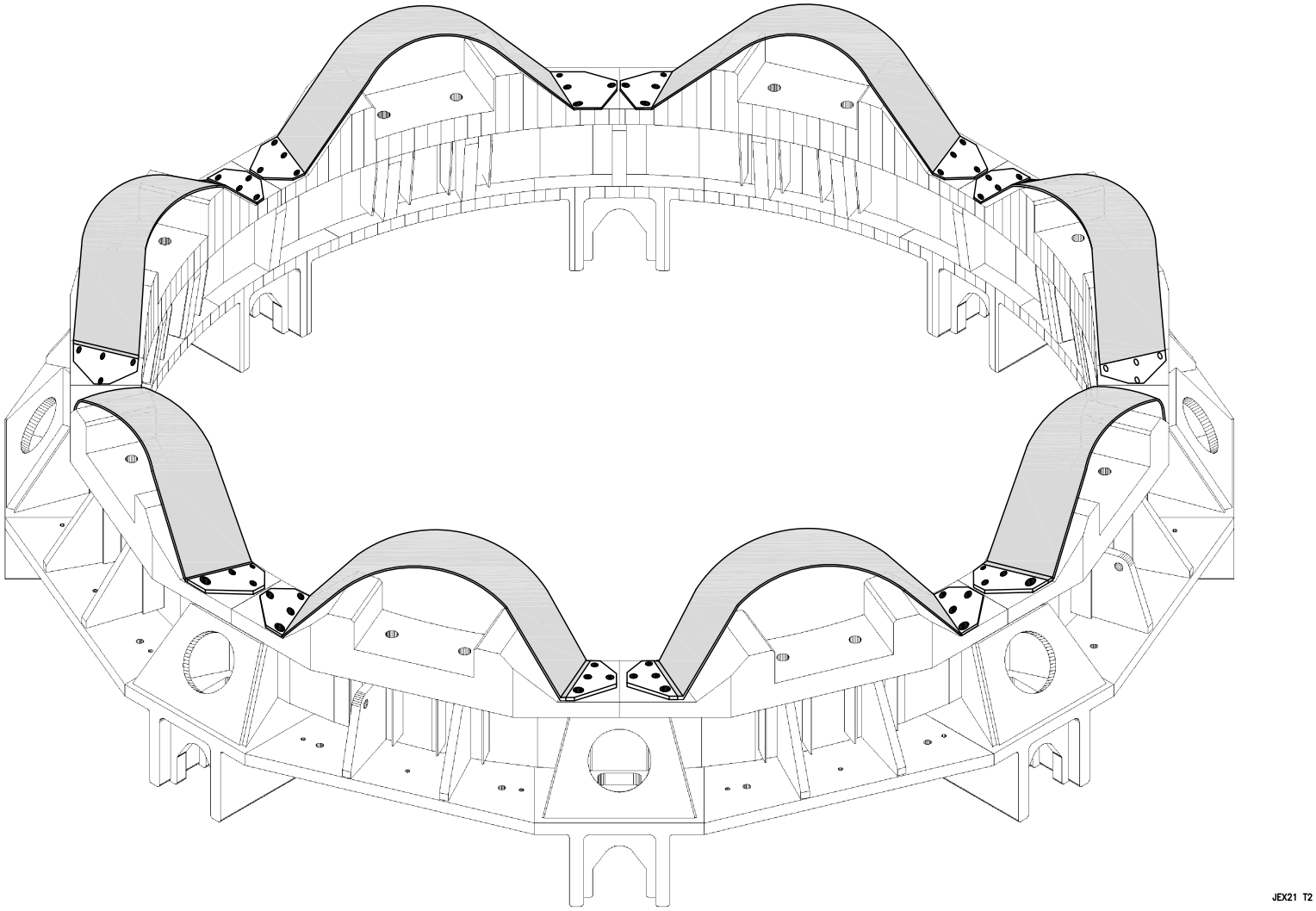

Figure 5.4-10—Steam Generator Supports

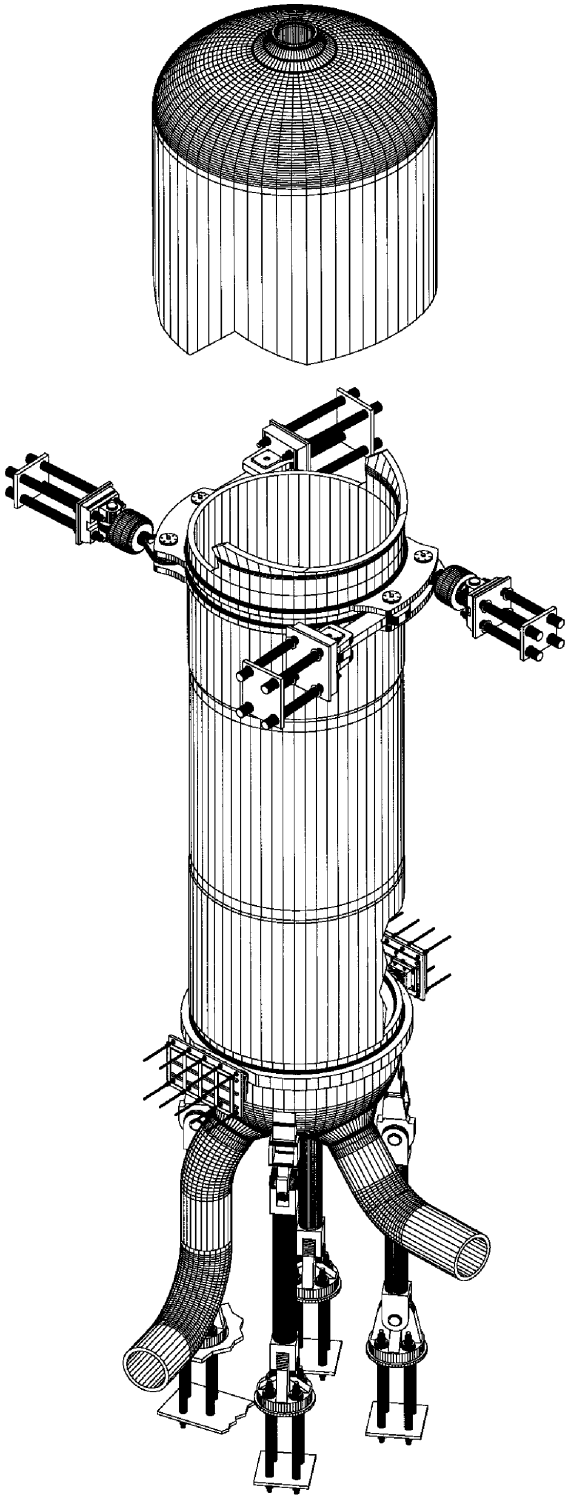

JEX22 T2

Figure 5.4-11—Reactor Coolant Pump Supports

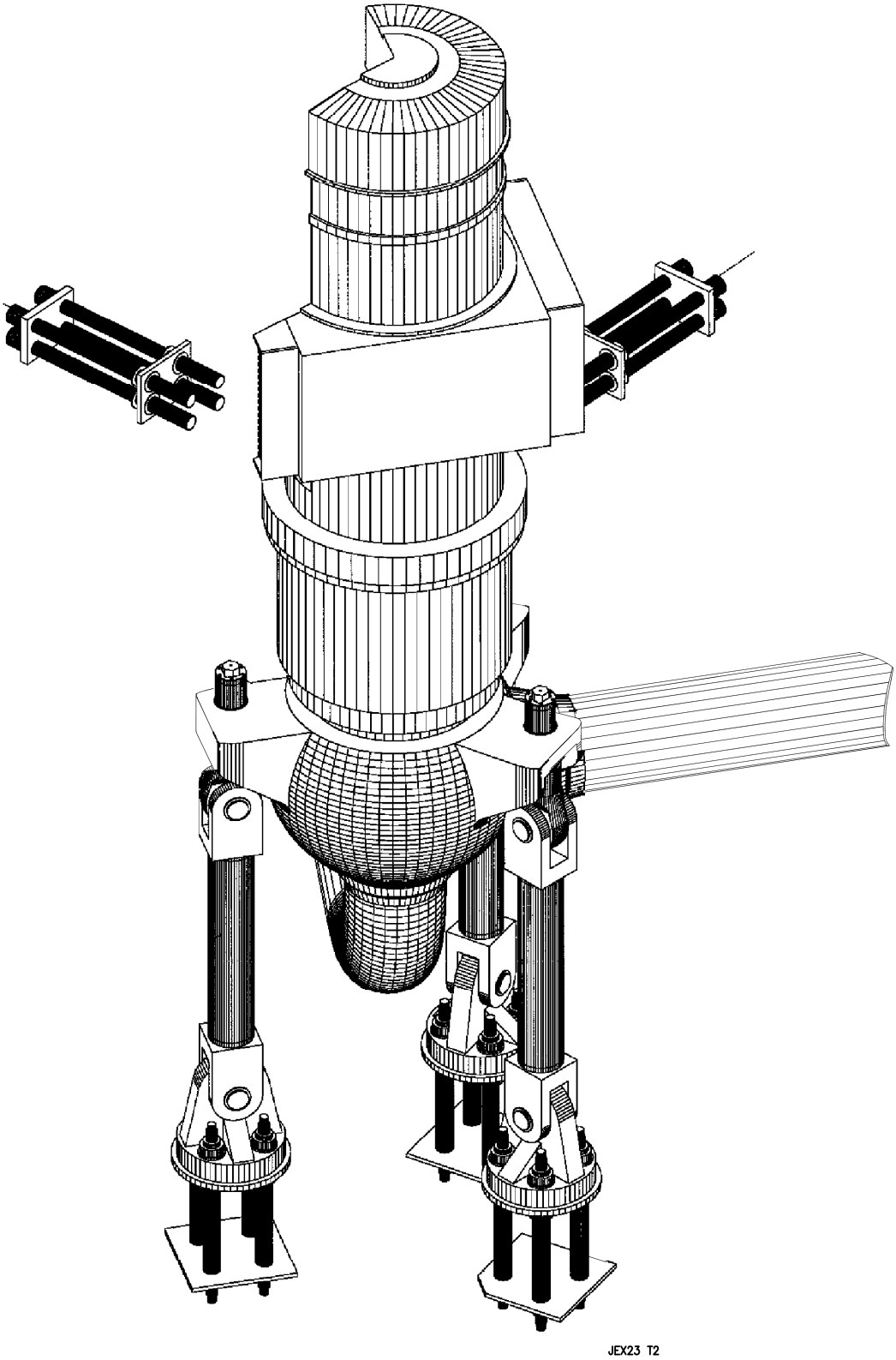

Figure 5.4-12—Pressurizer Supports

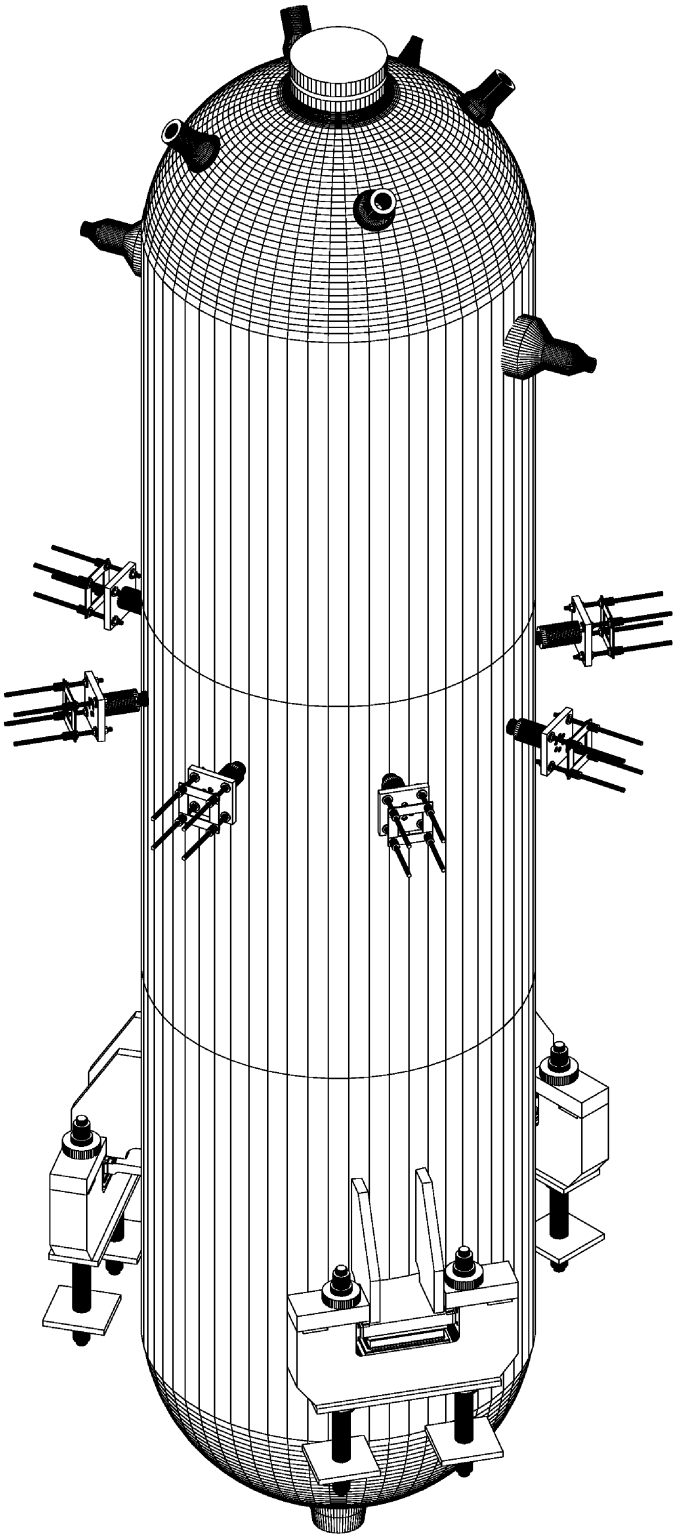

JEX24 T2

Figure 5.4-13—Core Exit Temperature

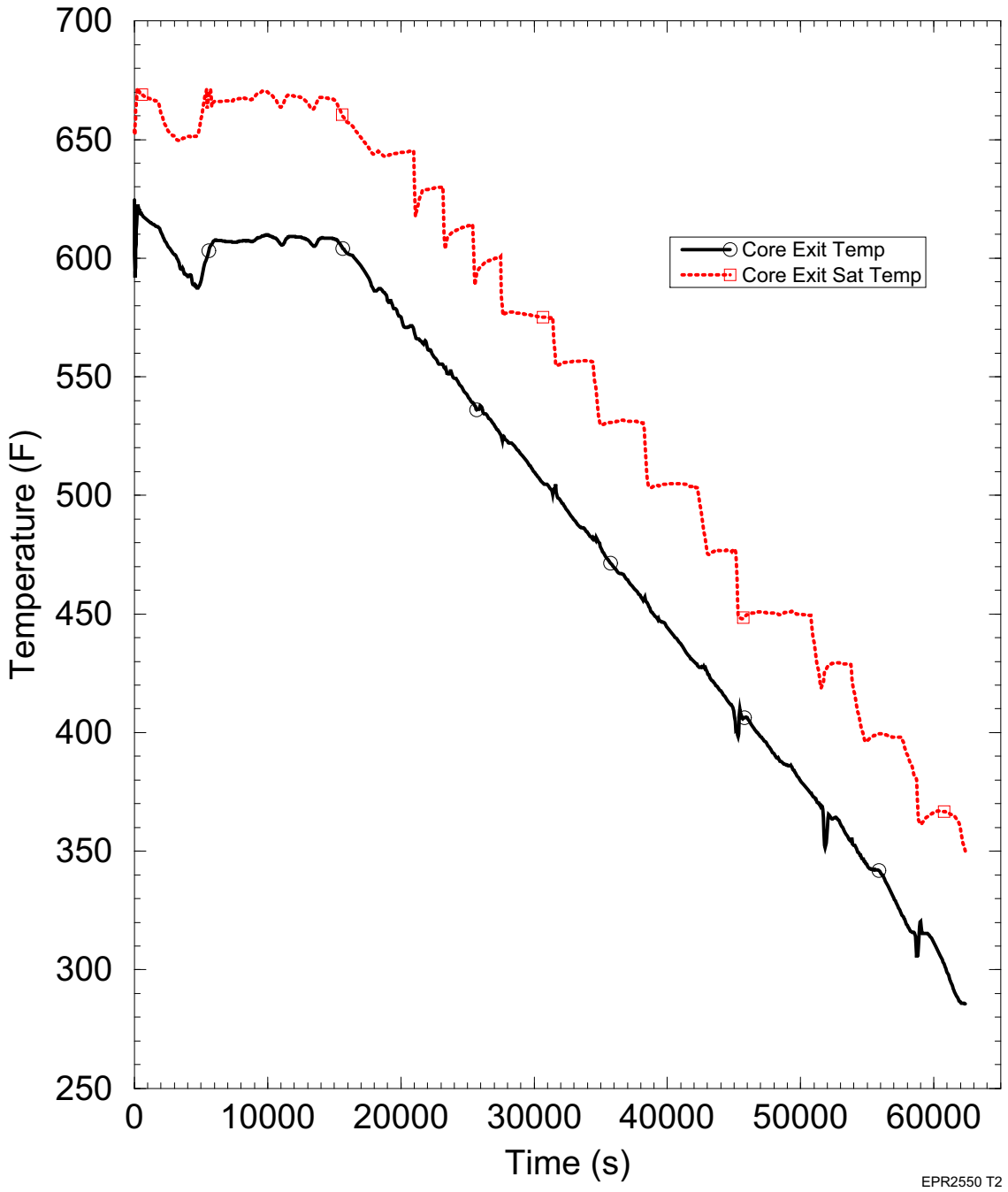

Figure 5.4-14—EFW Usage

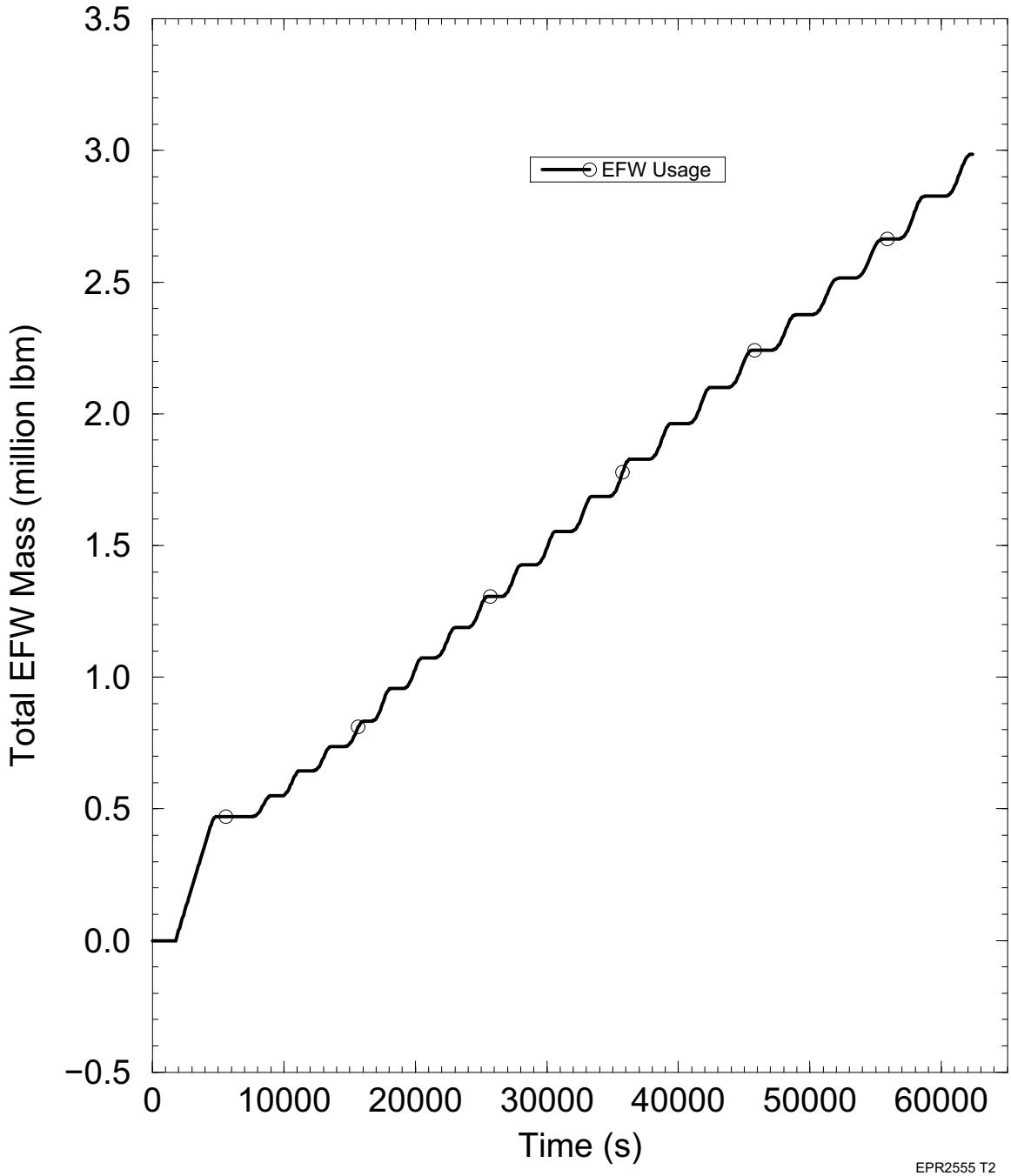

Figure 5.4-15—Primary Temperatures

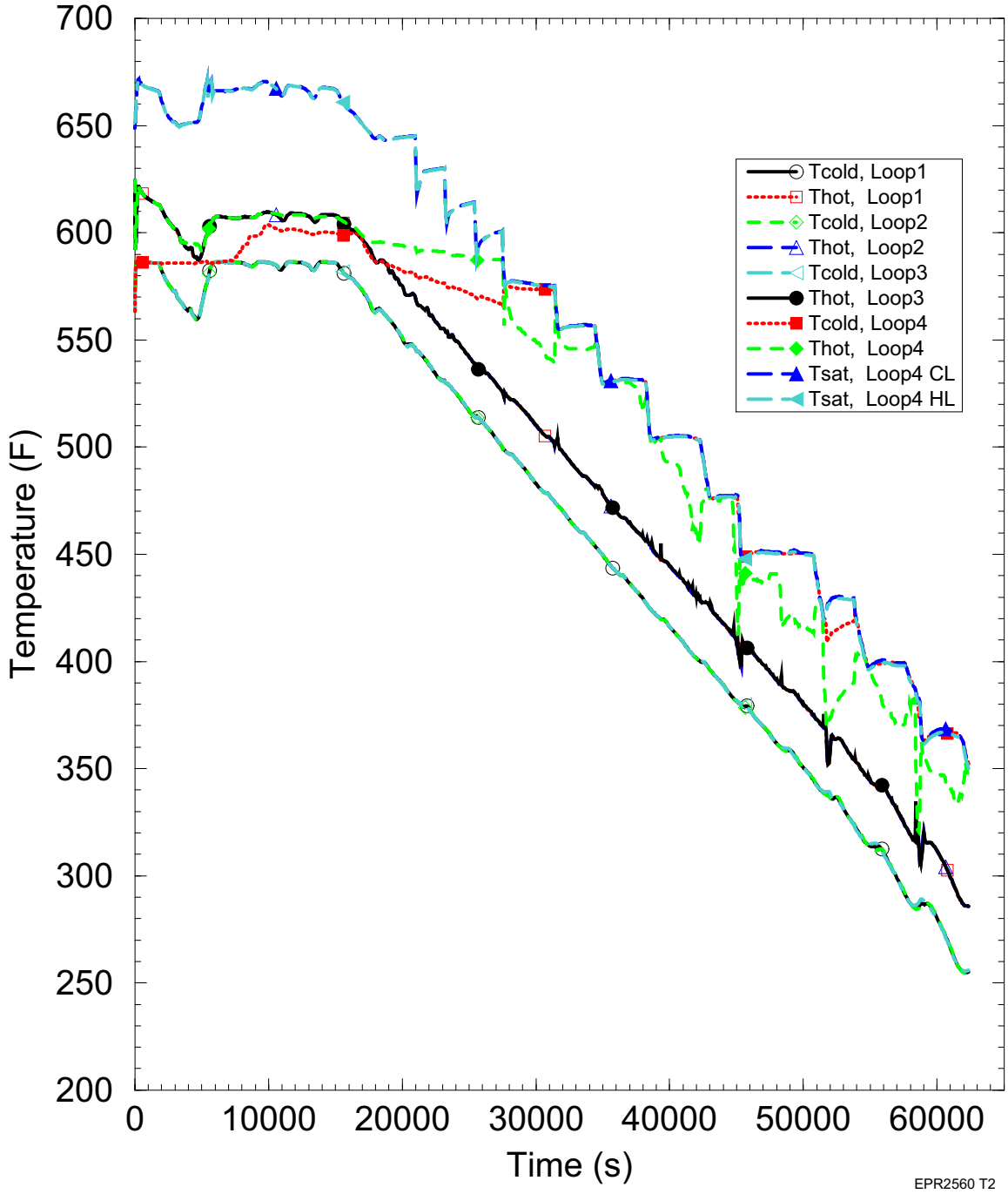

Figure 5.4-16—Pressurizer Level

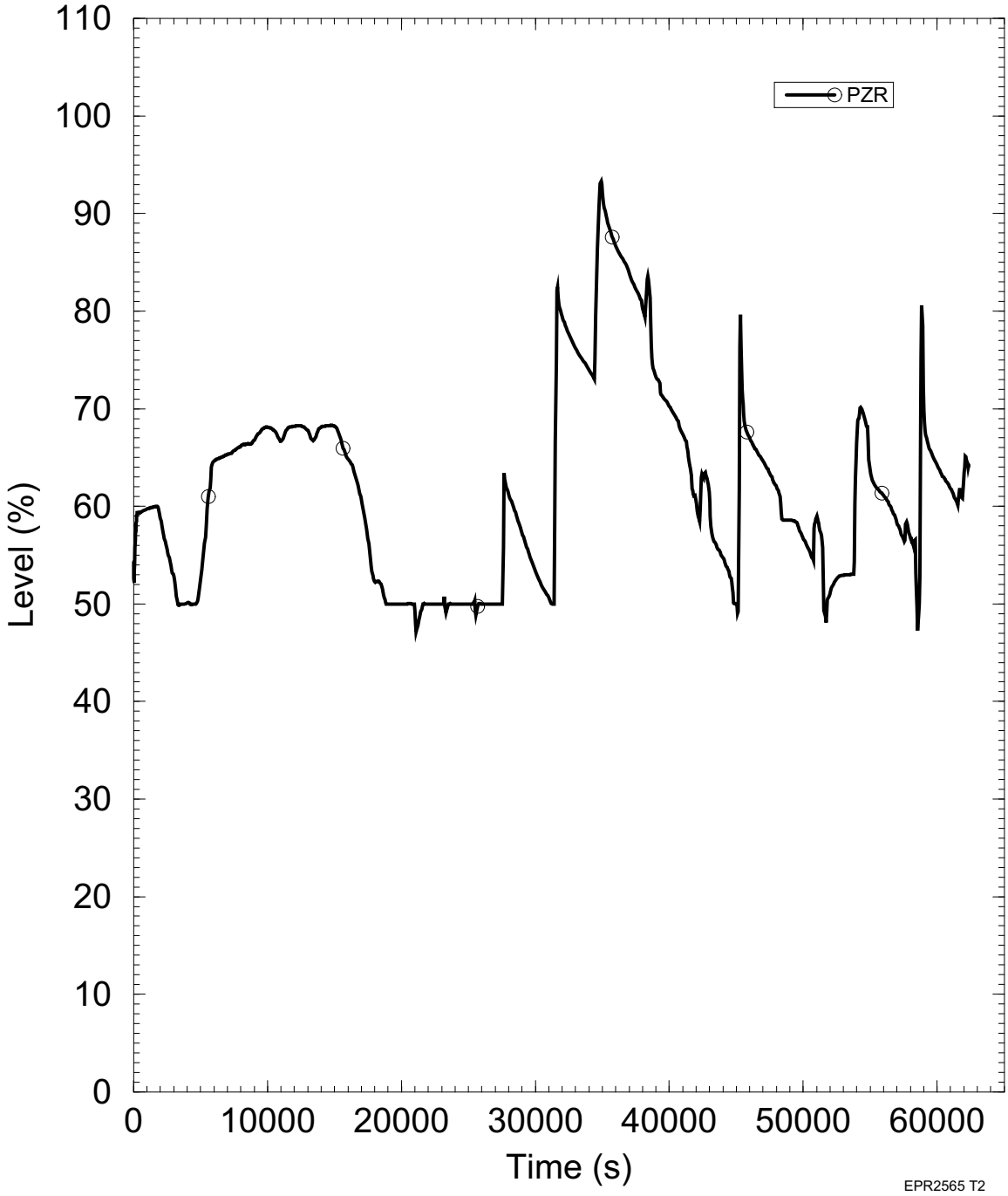

Figure 5.4-17—RCS Pressures

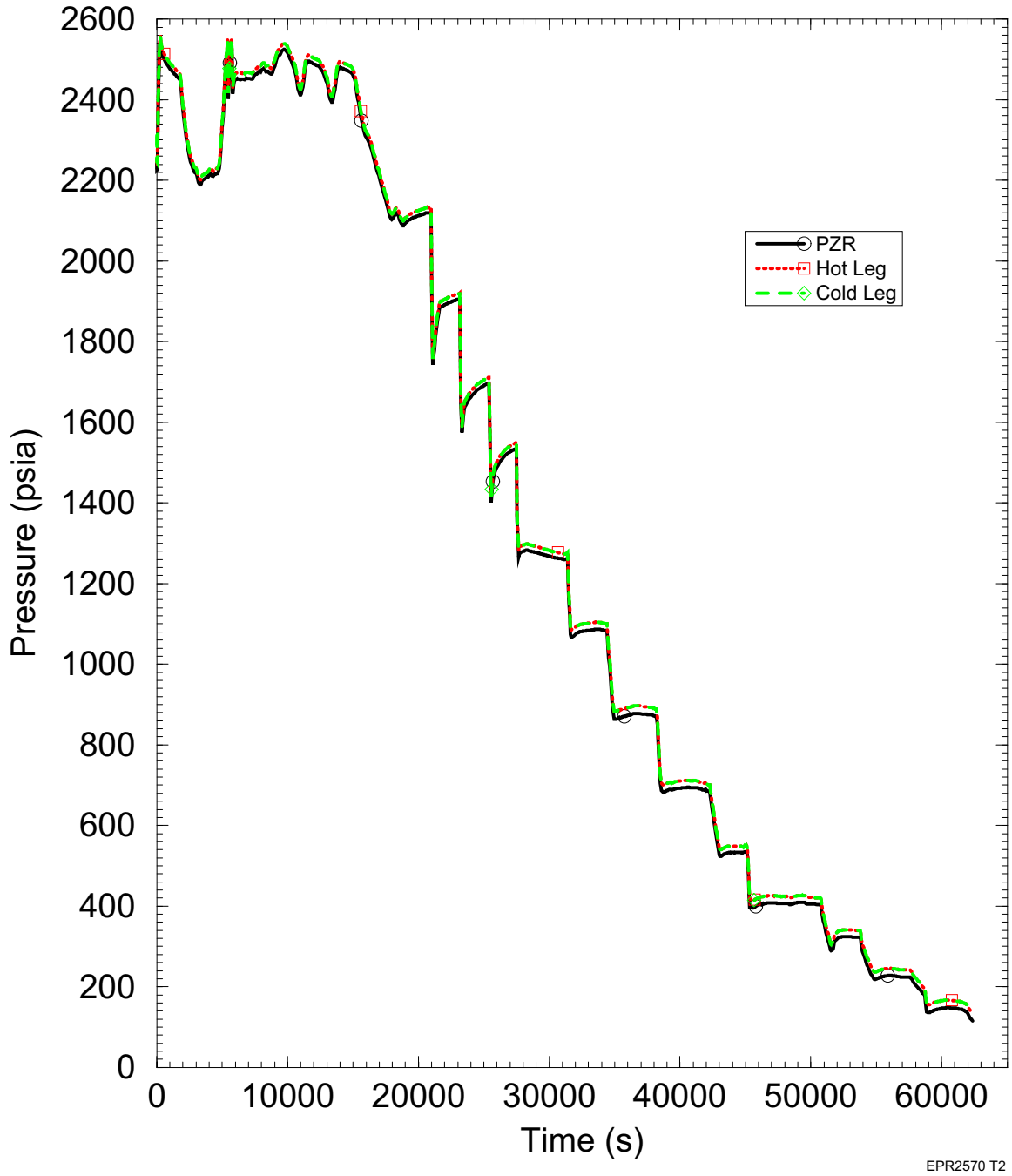
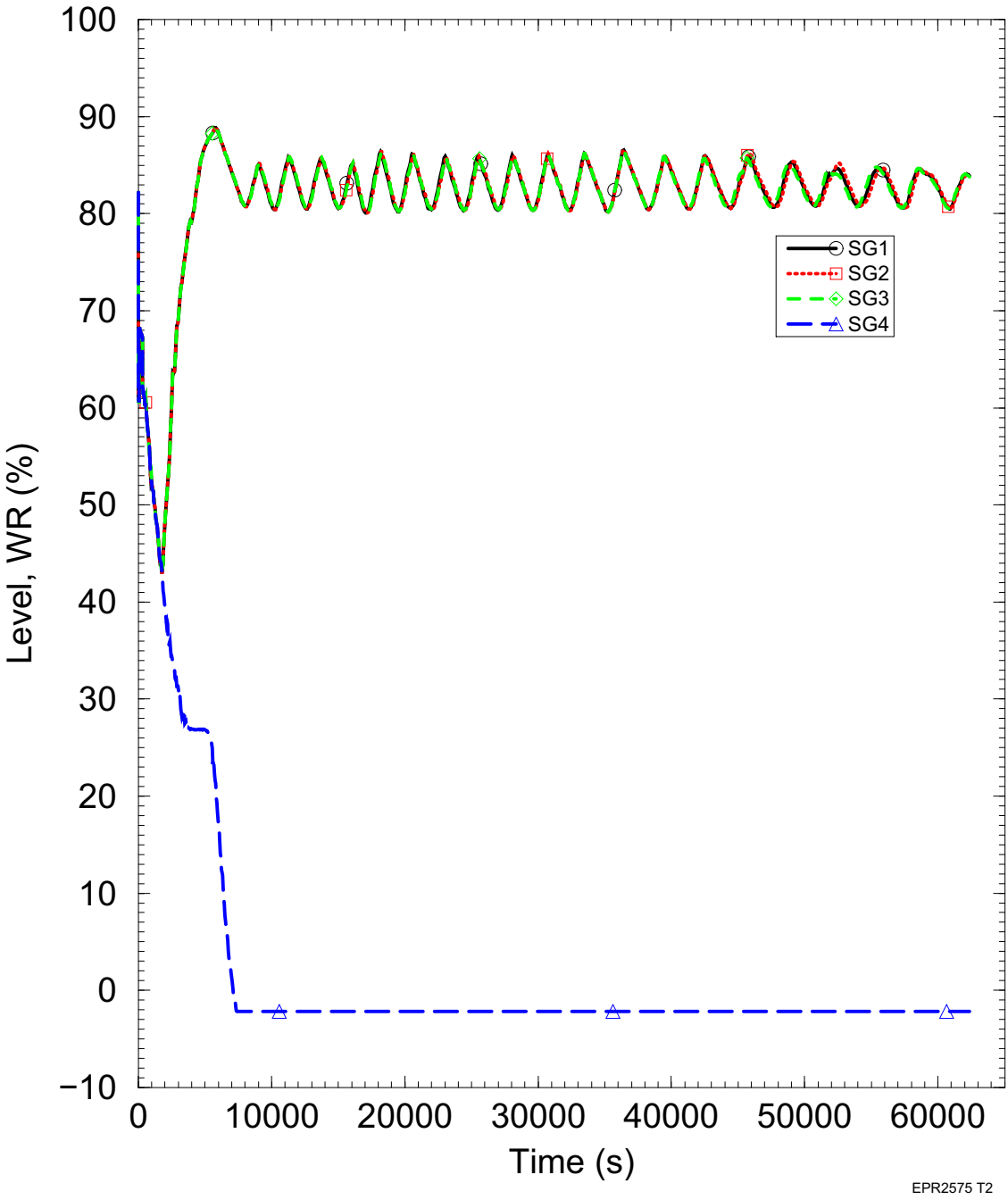
Figure 5.4-18—SG Levels