## Figure 3E.1-63—RSB Wall to Roof Connection - Typical Reinforcement

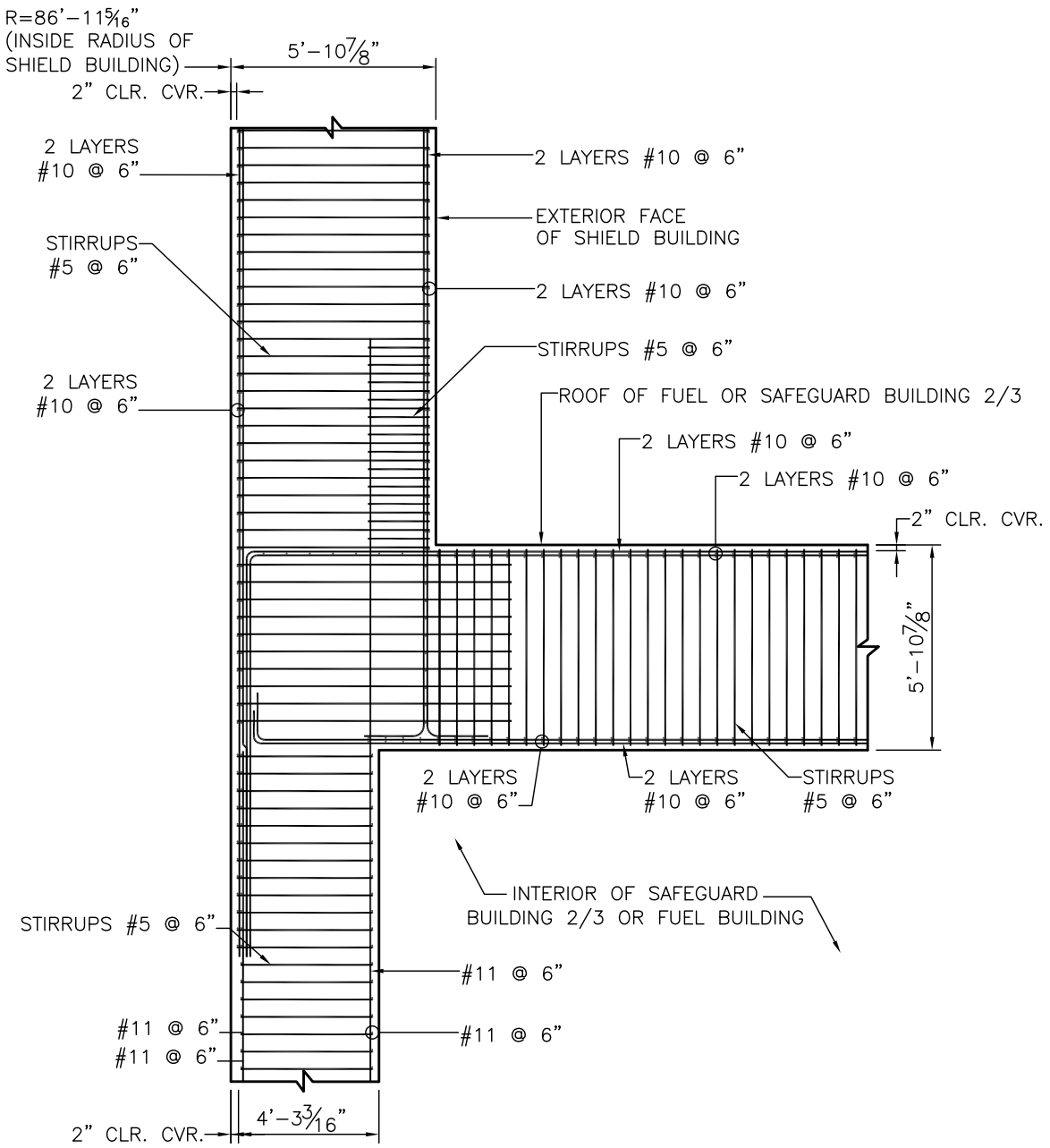


UJB8001-01 T2

**Figure 3E.1-64—Location of SB1 South and West Walls Below Grade**

Official Use Only - Security Sensitive Information - Withhold under 10 CFR 2.390

**Figure 3E.1-65—Location of SB4 North and East Walls Below Grade**

Official Use Only - Security Sensitive Information - Withhold under 10 CFR 2.390

**Figure 3E.1-66—SB1 Wall A13001 Isometric View**

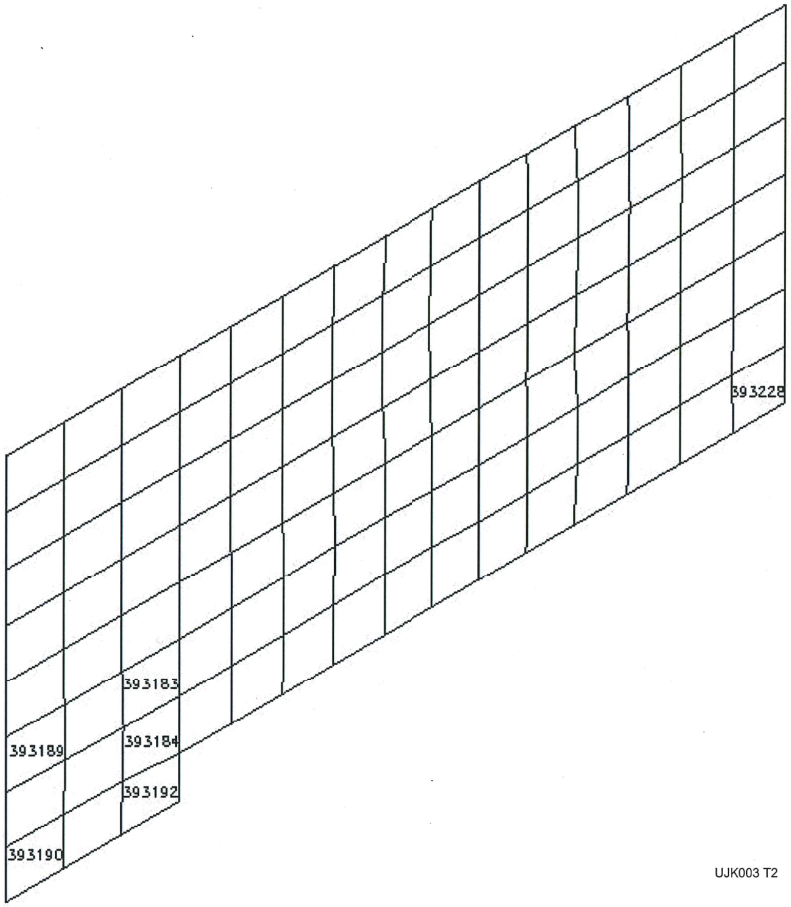

**Figure 3E.1-67—SB1 Wall A13003 Isometric Vew**

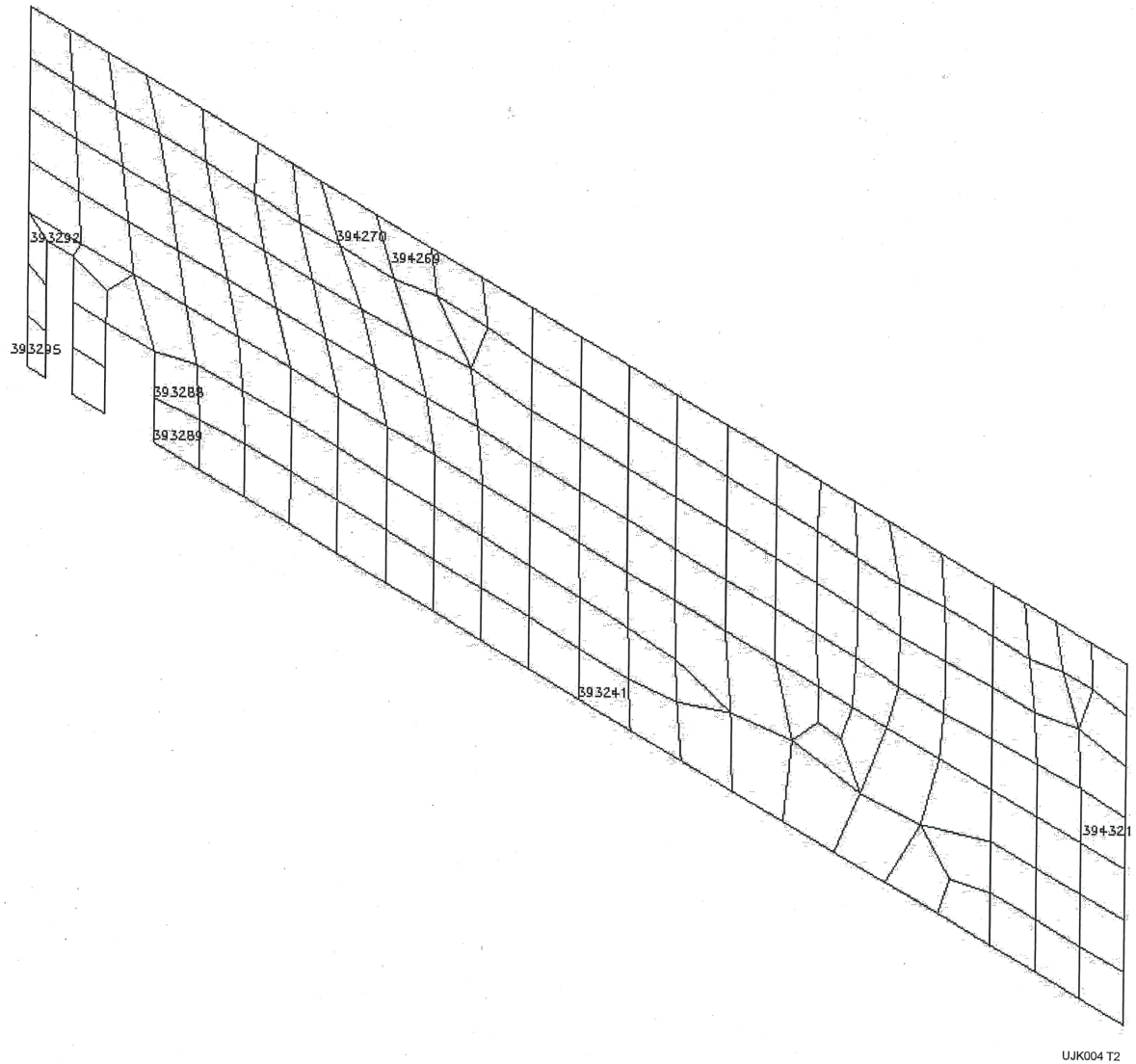

**Figure 3E.1-68—SB4 Wall A33008 Isometric View**

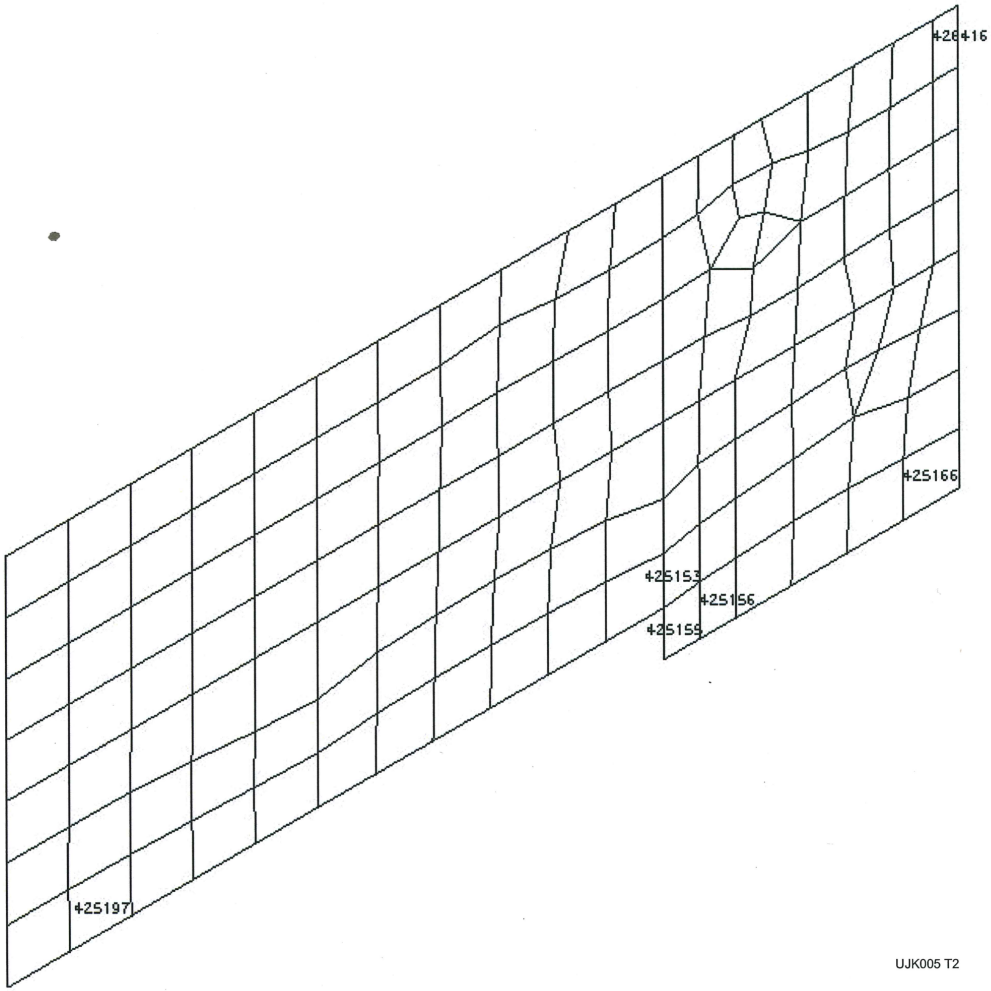

**Figure 3E.1-69—SB4 Wall A33003 Isometric View**

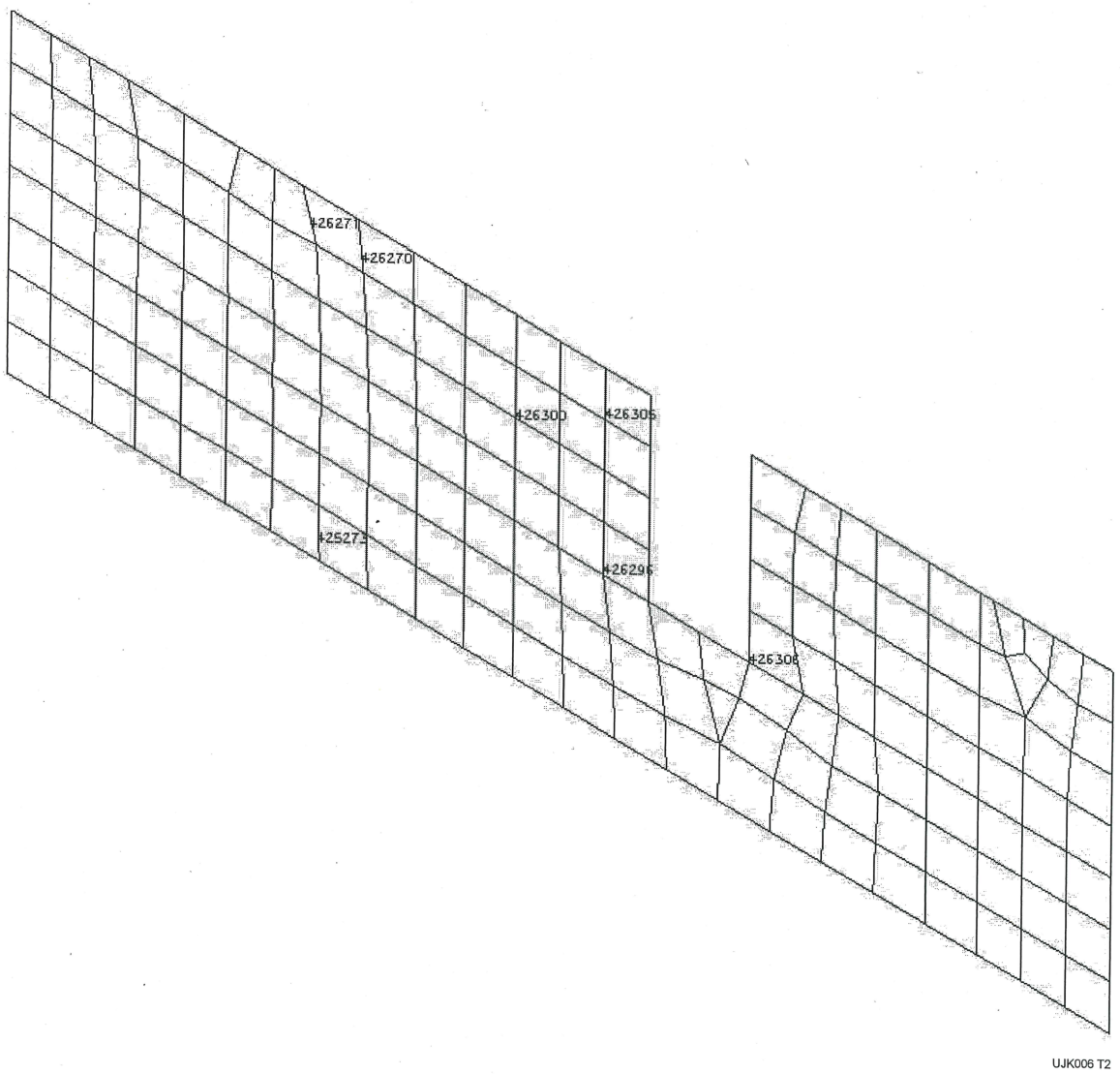

**Figure 3E.1-70—Cross Section of Walls A13001, A13003, A33008, and A33003 Showing Reinforcement**

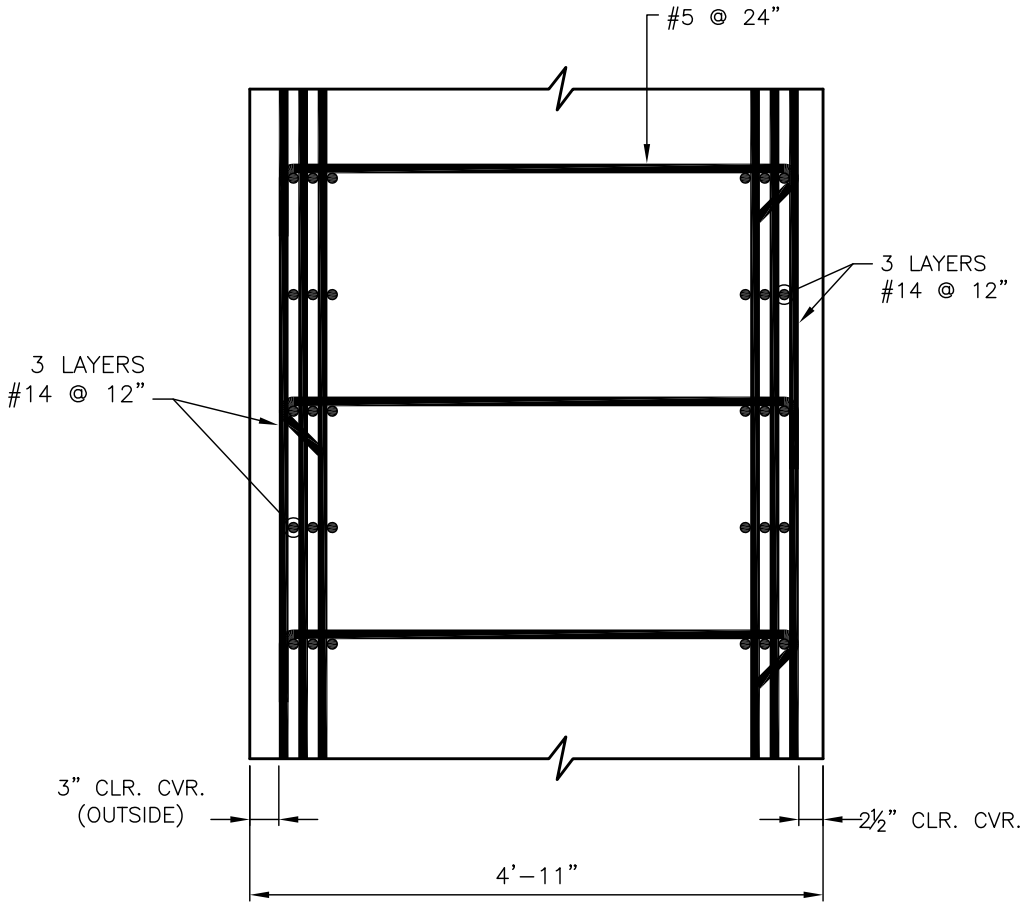


REV 001
UJK8007–01 T2

**Figure 3E.1-71—Isometric FEM of NI Foundation Basemat**

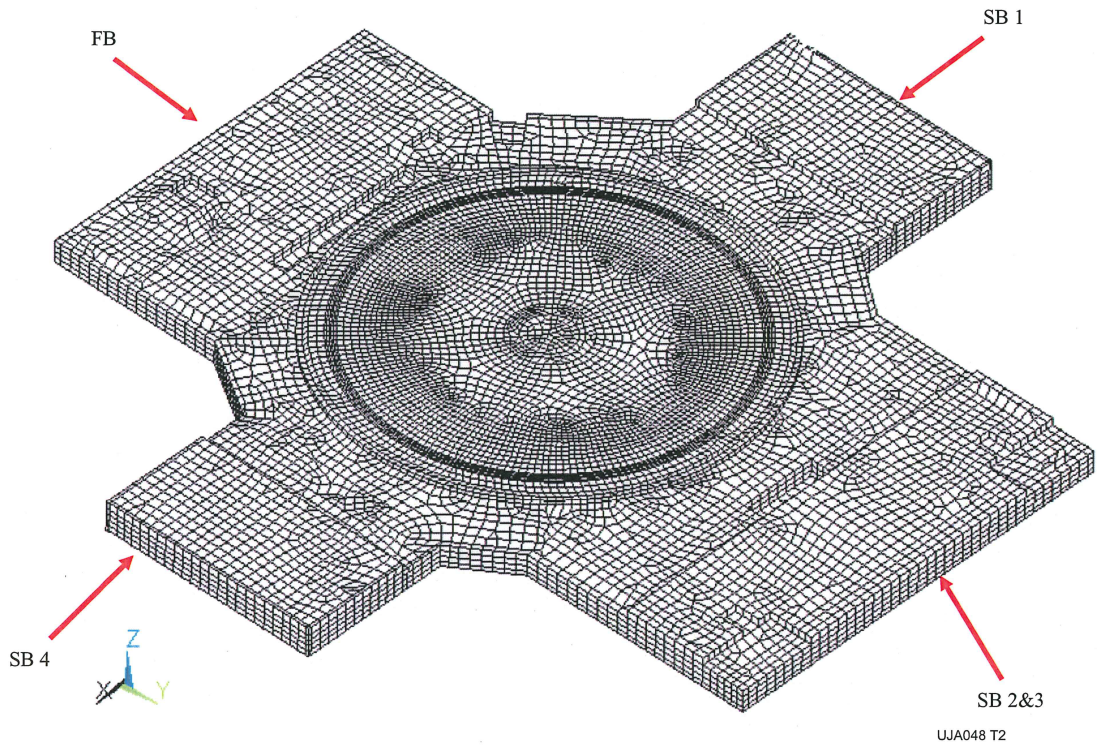

**Figure 3E.1-72—Elevation View of RB Internal Structure Base Slab**

Official Use Only - Security Sensitive Information - Withhold under 10 CFR 2.390

**Figure 3E.1-73—Reinforcement Pattern for NI Foundation Base Mat (Except Below RCB)**

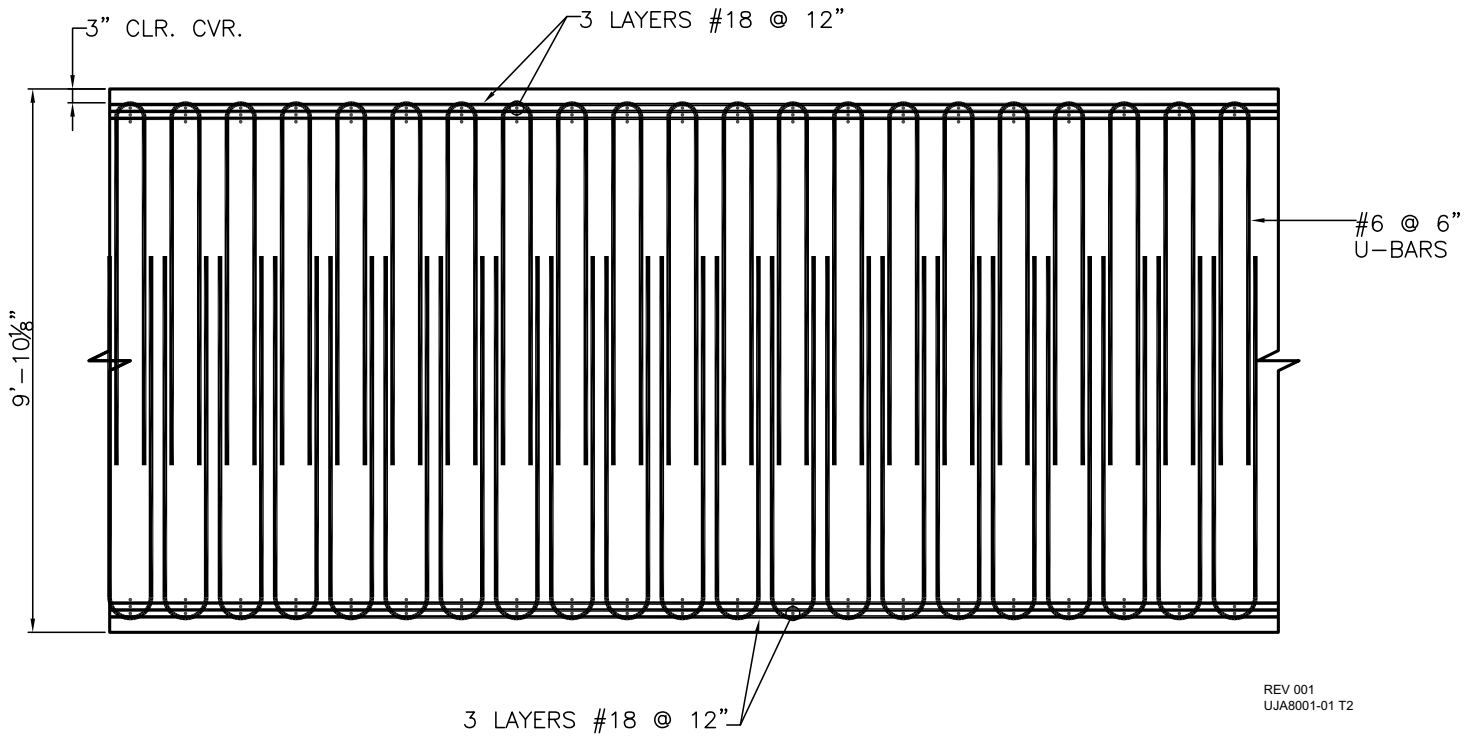

**Figure 3E.1-74—Reinforcement Pattern for RB Internal Structures Base Slab - Elevation -25'-7" to -20'-2"**

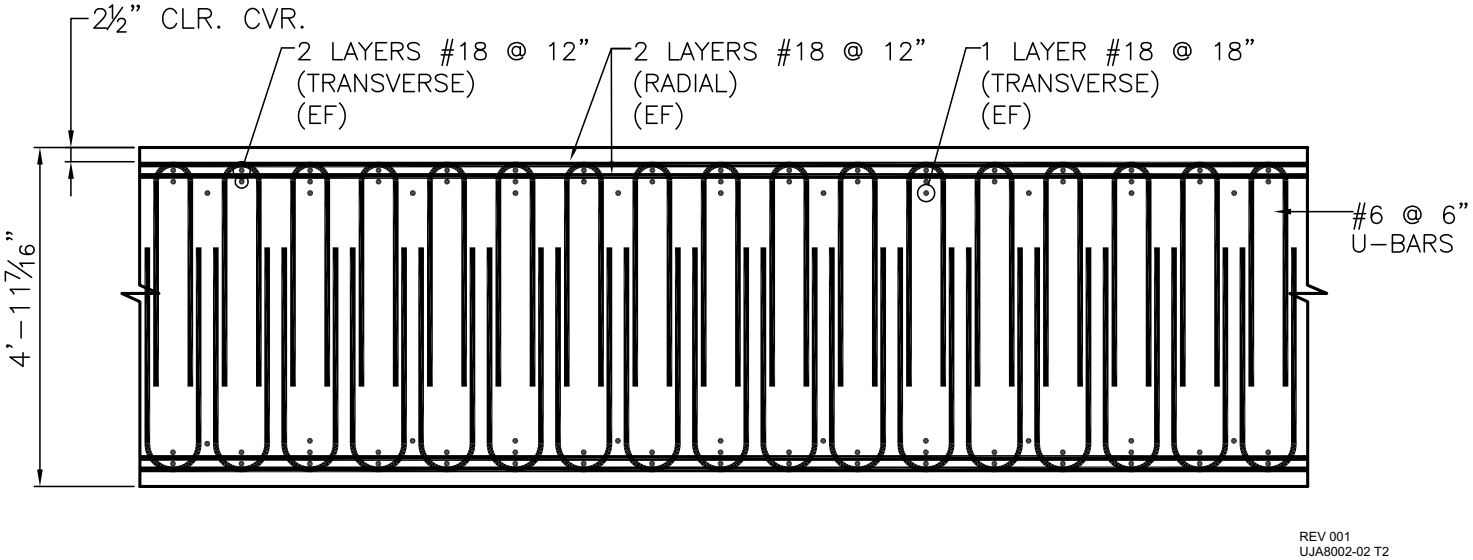

**Figure 3E.1-75—Reinforcement Pattern for RB Internal Structures Base Slab - Elevation -25'-7" to -7'-6 1/2"**

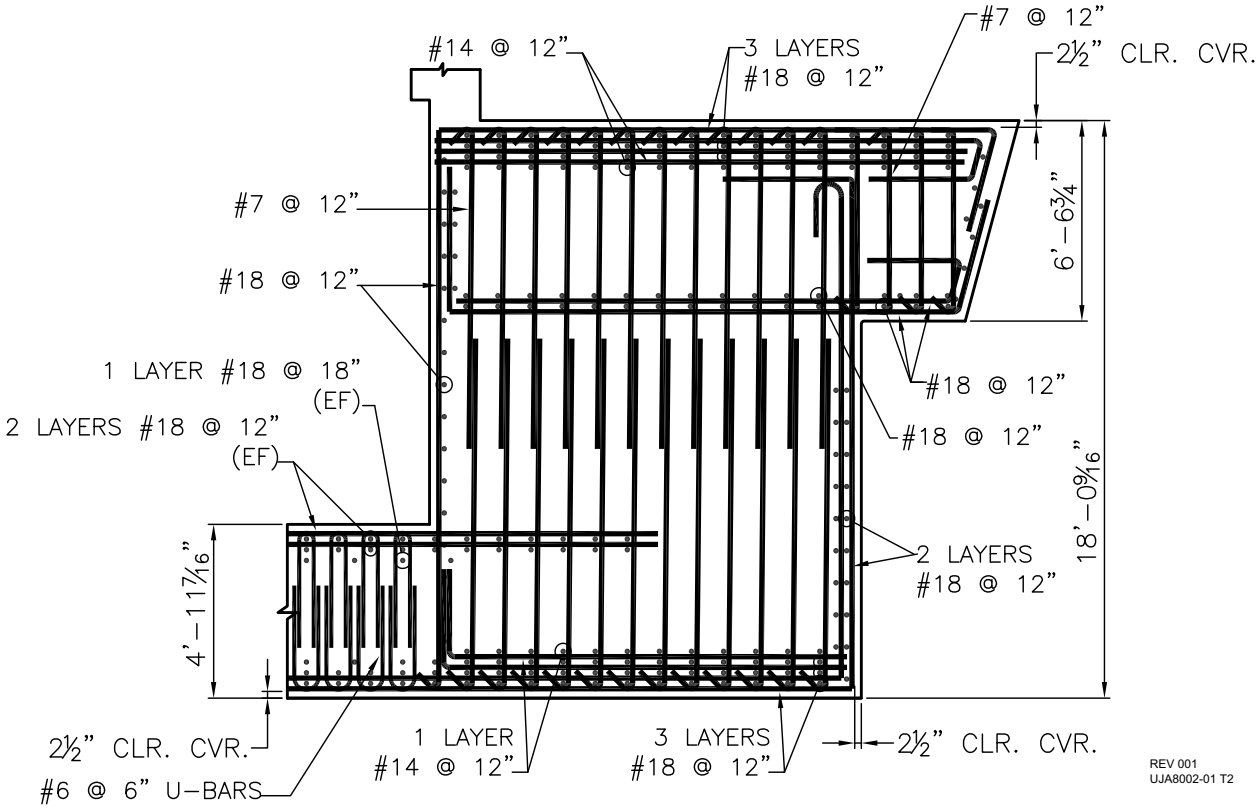

**Figure 3E.1-76—Reinforcement Pattern for NI Foundation Base Mat below RCB**

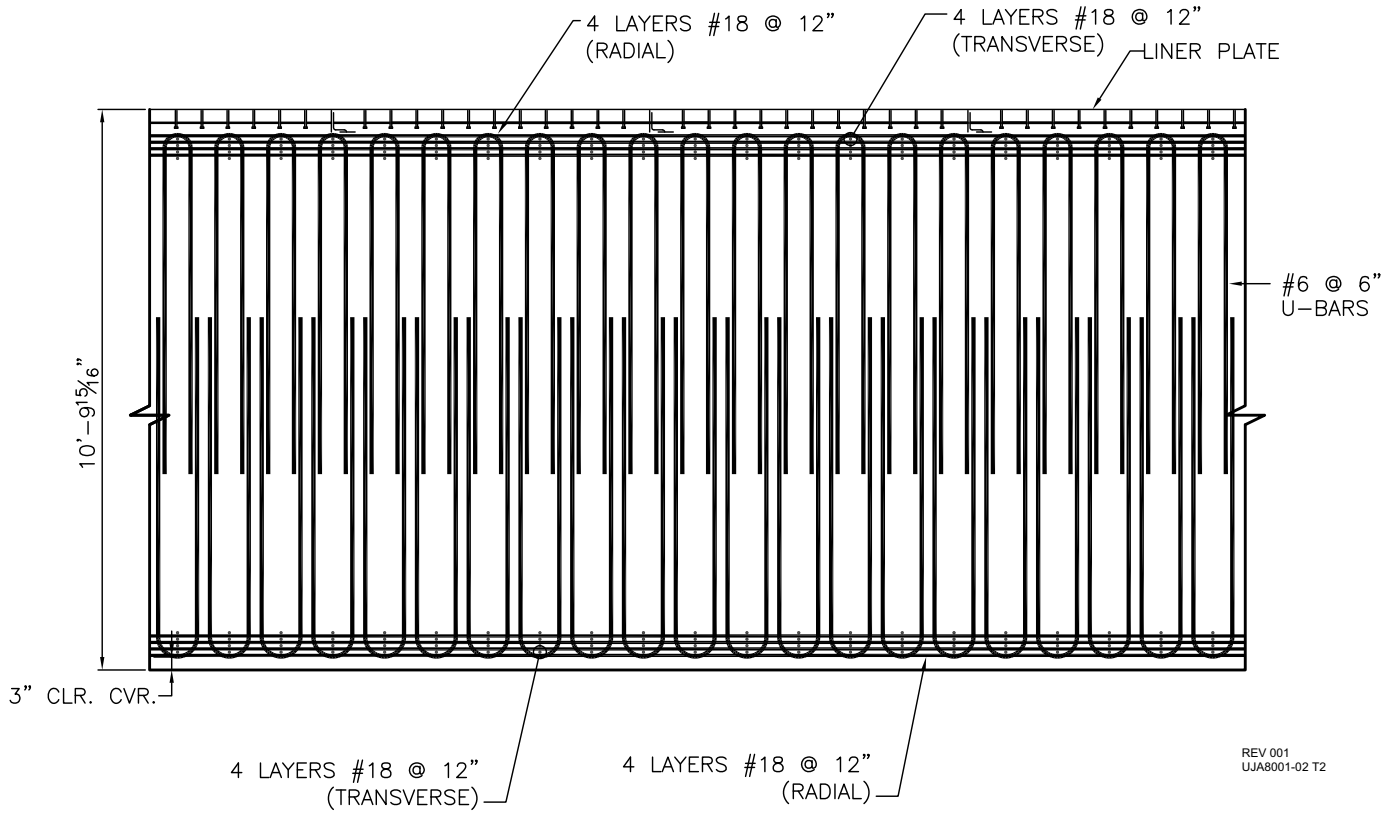


Next File