Figure 2.5.2-1—Class 1E Uninterruptible Power Supply System Functional Arrangement

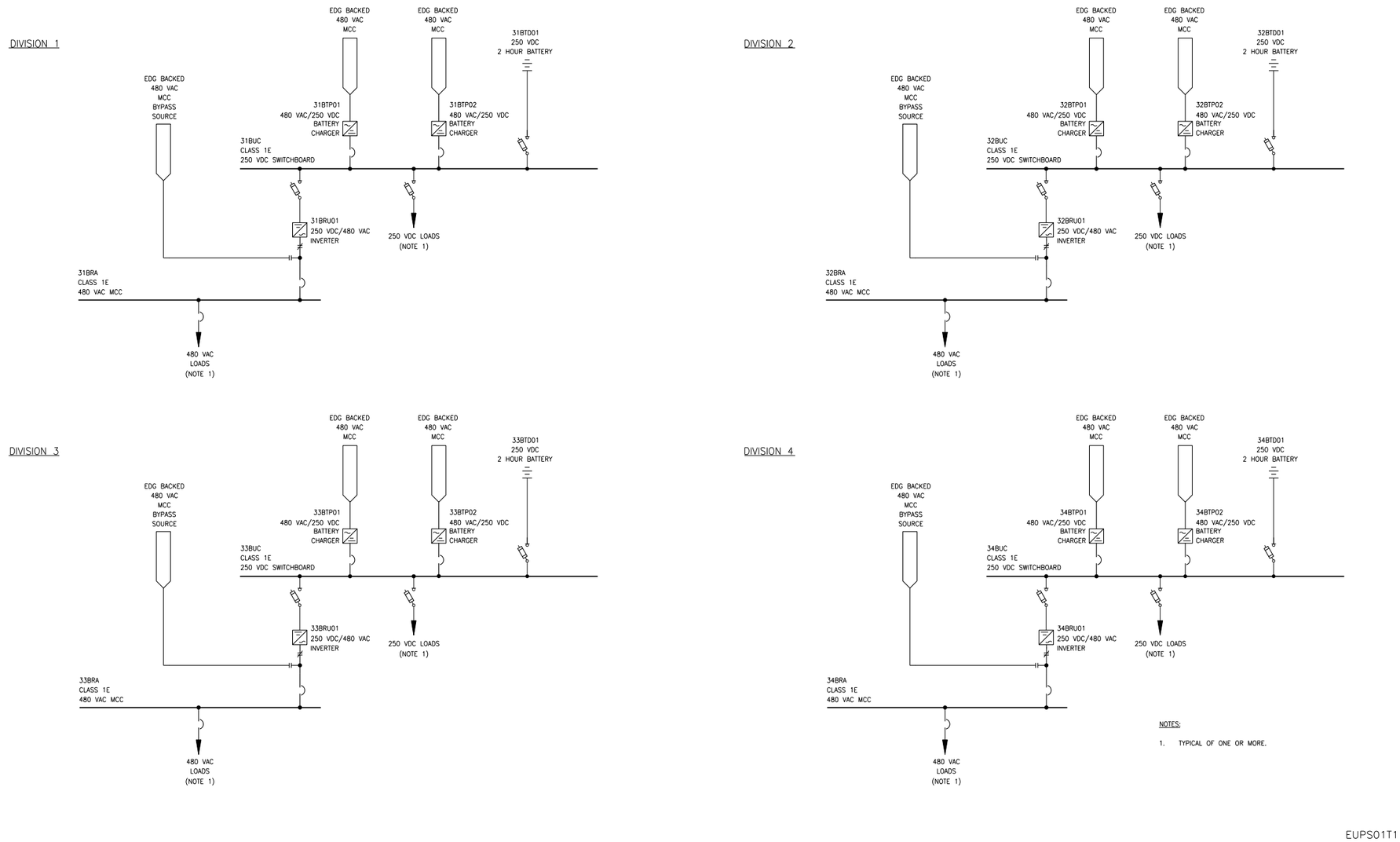

Next File