ArevaEPRDCPEm Resource

From: Pederson Ronda M (AREVA NP INC) [Ronda.Pederson@areva.com]
Sent: Tuesday, June 09, 2009 3:27 PM
To: Tesfaye, Getachew
Cc: WILLIFORD Dennis C (AREVA NP INC); BENNETT Kathy A (OFR) (AREVA NP INC); DELANO Karen V (AREVA NP INC)
Subject: Response to U.S. EPR Design Certification Application RAI No. 225, FSARCh. 11
Attachments: RAI 225 Response US EPR DC.pdf

Getachew,

Attached please find AREVA NP Inc.'s response to the subject request for additional information (RAI). The attached file, "RAI 225 Response US EPR DC.pdf" provides technically correct and complete responses to all questions.

Appended to this file are affected pages of the U.S. EPR Final Safety Analysis Report in redline-strikeout format which support the response to RAI 225 Questions 11.04-5 and 11.04-6.

The following table indicates the respective pages in the response document, "RAI 225 Response US EPR DC.pdf," that contain AREVA NP's response to the subject questions.

Question #	Start Page	End Page
RAI 225 — 11.04 - 5	2	2
RAI 225 — 11.04 - 6	3	3

This concludes the formal AREVA NP response to RAI 225, and there are no questions from this RAI for which AREVA NP has not provided responses.

Sincerely,

Ronda Pederson
ronda.pederson@areva.com
Licensing Manager, U.S. EPR Design Certification
AREVA NP Inc.
An AREVA and Siemens company
3315 Old Forest Road
Lynchburg, VA 24506-0935
Phone: 434-832-3694
Cell: 434-841-8788

From: Getachew Tesfaye [mailto:Getachew.Tesfaye@nrc.gov]
Sent: Friday, May 15, 2009 8:41 AM
To: ZZ-DL-A-USEPR-DL
Cc: Douglas Dodson; John Segala; Steven Bloom; Surinder Arora; Jason Jennings; Joseph Colaccino; ArevaEPRDCPEm Resource
Subject: U.S. EPR Design Certification Application RAI No. 225 (2533), FSARCh. 11

Attached please find the subject requests for additional information (RAI). A draft of the RAI was provided to you on May 11, 2009, and on May 14, 2009, you informed us that the RAI is clear and no further clarification is needed. As a result, no change is made to the draft RAI. The schedule we have established for review of your application assumes technically correct and complete responses within 30 days of receipt of RAIs. For any RAIs that cannot be answered within 30 days, it is expected that a date for receipt of this information will be provided to the staff within the 30 day period so that the staff can assess how this information will impact the published schedule.

Thanks,
Getachew Tesfaye
Sr. Project Manager
NRO/DNRL/NARP
(301) 415-3361

Hearing Identifier: AREVA_EPR_DC_RAIs
Email Number: 558

Mail Envelope Properties (5CEC4184E98FFE49A383961FAD402D31F818A1)

Subject: Response to U.S. EPR Design Certification Application RAI No. 225, FSARCh. 11
Sent Date: 6/9/2009 3:27:08 PM
Received Date: 6/9/2009 3:27:22 PM
From: Pederson Ronda M (AREVA NP INC)

Created By: Ronda.Pederson@areva.com

Recipients:
"WILLIFORD Dennis C (AREVA NP INC)" <Dennis.Williford@areva.com>
Tracking Status: None
"BENNETT Kathy A (OFR) (AREVA NP INC)" <Kathy.Bennett@areva.com>
Tracking Status: None
"DELANO Karen V (AREVA NP INC)" <Karen.Delano@areva.com>
Tracking Status: None
"Tesfaye, Getachew" <Getachew.Tesfaye@nrc.gov>
Tracking Status: None

Post Office: AUSLYNCMX02.adom.ad.corp

Files	**Size**	**Date & Time**
MESSAGE	2323	6/9/2009 3:27:22 PM
RAI 225 Response US EPR DC.pdf	160379	

Options
Priority: Standard
Return Notification: No
Reply Requested: No
Sensitivity: Normal
Expiration Date:
Recipients Received:

Response to

Request for Additional Information No. 225 (2533), Revision 0

5/15/2009

U. S. EPR Standard Design Certification
AREVA NP Inc.
Docket No. 52-020
SRP Section: 11.04 - Solid Waste Management System
Application Section: 11.4

QUESTIONS for Balance of Plant Branch 1 (AP1000/EPR Projects) (SBPA)

Question 11.04-5:

Standard Review Plan (SRP) Section 11.4, "Solid Waste Management System," states, “The scope of the review of the solid waste management system (SWMS) includes line or flow diagrams of the system, P&IDs, process and effluent radiation monitoring and control instrumentation, and descriptive information for the SWMS and for those auxiliary supporting systems that are essential to the operation of the SWMS.” Similarly, Regulatory Guide (RG) 1.206, "Combined License Applications for Nuclear Power Plants (LWR Edition)," provides further guidance in Section C.I.11.4.2.4, “The applicant should provide system P&IDs and process flow diagrams showing methods of operation and factors that influence waste treatment (e.g., system interfaces and potential bypass routes)…The applicant should provide P&IDs that indicate system interconnections and seismic and quality group interfaces.”

In RAI 11.4-1, the staff requested additional detail in U.S. EPR FSAR Tier 2, Figure 11.4-1, “Solid Waste Management Flow Diagram,” or a system P&ID. This information was requested to evaluate the adequacy of the design as required by 10 CFR 50.34a. The applicant responded by providing additional detail in U.S. EPR FSAR Tier 2, Figure 11.4-1. Specifically, clarification to the processing path for the waste stream wet active waste and a block for the concentrate recirculation pump were included.

Although general descriptions of components have been included and U.S. EPR FSAR Tier 2, Figure 11.4-1, “Solid Waste Management Flow Diagram,” has been revised, the applicant needs to include in the FSAR a COL Information Item for the SWMS P&IDs. The applicant also needs to provide additional information in U.S EPR FSAR Tier 2, Figure 11.4-1 on major system interfaces, potential bypass routes, and other connections within the “Radioactive Concentrates Processing System (Wet Solid Wastes).” Specifically, additional process flow diagram information is requested that relates to, but is not limited to, flush water connections to the resin proportioning tank, disposition of water from the vacuum unit, connections between the condensate drying units, condensate counters, and the condensate buffer sluice, and scrubber tank connections to the radioactive waste building ventilation system.

Response to Question 11.04-5:

A simplified P&ID for the radioactive concentrates processing system will be added to U.S. EPR FSAR Tier 2, Section 11.4. Figure 11.4-2—Radioactive Concentrates Processing System, will be added, with accompanying reference to this figure in the text of U.S. EPR FSAR Tier 2, Section 11.4. The figure provides information on major system interfaces and connections and potential bypass routes, as requested. Since this P&ID is being added to the U.S. EPR FSAR, no COL Information Item is needed to address the SWMS P&IDs.

As stated in the design criteria discussion in U.S. EPR FSAR Tier 2, Section 11.4.1.2, the quality classification of SWMS components is Quality Group D, and the seismic classification is Radwaste Seismic (RS).

FSAR Impact:

U.S. EPR FSAR Tier 2, Sections 11.4.2.2 and 11.4.3.2 will be revised and Figure 11.4-2 will be added as described in the response and indicated on the enclosed markup.

Question 11.04-6:

Follow-up to RAI 11.4-2

The staff asked the applicant in RAI 11.4-2 to provide the general equipment design parameters of the solid waste management system (SWMS), such as pump capacity, crane capacity, tank volume, materials, so the staff could adequately assess the design of the SWMS. The applicant replied to RAI 11.4-2 in its response to Request for Additional Information (RAI) Number 105, Revision 0 dated November 5, 2008. In the response, the applicant stated that Table 11.4-14, "Solid Waste Management System Component Data," will be added to U.S. EPR FSAR Tier 2, Section 11.4. However, Table 11.4-14 does not provide the equipment design standards. The staff finds the component information inadequate to assess the system compliance to the design standards referenced in Regulatory Guide (RG) 1.143, "Design Guidance for Radioactive Waste Management Systems, Structures, and Components Installed in Light-Water-Cooled Nuclear Power Plants," Table 1. Revise the DCD to specify that the codes and standards referenced in RG 1.143 Table 1 are complied with for the SWMS.

Response to Question 11.04-6:

The current description of the design basis for the solid waste management system in U.S. EPR FSAR Tier 2, Section 11.4.1 states: "The solid waste management system is designed to meet RG 1.143 and NUREG-0800, BTP 11-3." To provide additional clarity, U.S. EPR FSAR Tier 2, Section 11.4.2.1 will be revised to specify that components listed in Table 11.4-14—Solid Waste Management System Component Data, comply with the codes and standards referenced in RG 1.143, Table 1.

FSAR Impact:

U.S. EPR FSAR Tier 2, Section 11.4.2.1 will be revised as described in the response and indicated on the enclosed markup.

U.S. EPR Final Safety Analysis Report Markups

Wastes are initially classified as combustible, compressible or noncombustible and noncompressible. Compressible waste is compacted to reduce its volume. The wastes are further segregated based on properties, sizes, materials, and activity of the waste material. Waste containing moisture is collected and stored separately to avoid wetting dry active waste and to allow short-term treatment to prevent decomposition and hydrogen formation.

The combustible and compressible wastes are transferred from the storage rooms to the treatment area (e.g., compaction and compression), placed into storage drums, and compacted for temporary storage. The noncombustible and noncompressible wastes (thick metal parts, for example) are transported to the hot workshop, fragmented, and transferred into a drum.

Drums containing low-level radioactive waste are stored in the drum store area of the Radioactive Waste Processing Building until they are ready to be transported to offsite disposal. Drums stored in the drum store area have an activity level low enough that they meet ALARA dose criteria. Tubular shaft storage is provided for higher-level radioactive waste such as filter cartridges and treated resin waste.

11.04-6

The solid waste management processing and storage system is shown in Figure 11.4-1—Solid Waste Management Flow Diagram. Table 11.4-14—Solid Waste Management System Component Data lists the major equipment ~~and corresponding nominal design parameters.~~ designed to comply with the codes and standards referenced in RG 1.143, Table 1. Tables are provided showing the expected and maximum annual activities by nuclide for the noncompressible, compressible, and combustible dry active waste (DAW) in Tables 11.4-2 through 11.4-4. A summary total of the annual activity from dry active wastes is given in Table 11.4-5—Total Dry Active Waste Annual Activity.

11.4.2.2 Radioactive Concentrates Processing System (Wet Solid Wastes)

11.04-5

The radioactive concentrates processing system, as shown in Figure 11.4-2—Radioactive Concentrates Processing System, receives concentrates and sludges from other waste treatment systems and dries these influents to produce a monolithic salt block inside a storage drum. Evaporator concentrates from the concentrate tanks and contaminated sludge from the storage tanks of the liquid waste storage system are transferred to the concentrate buffer tank. These wastes are mixed, sampled, and analyzed for proper pretreatment before leaving the concentrate buffer tank.

Spent resins are stored in the resin waste tanks of the coolant purification system for an extended length of time to allow short-lived activity to decay away. These resins are then transferred into the resin proportioning tank or into a HIC. Depending upon activity levels in the resin in the proportioning tank, a portion of the resin is transferred into the concentrate buffer tank with other liquid waste where it is mixed

Vehicle Entrance Area Crane

The vehicle entrance area of the Radioactive Waste Processing Building has an installed high capacity crane used for loading and unloading drums and other containers from trucks or trailers. The crane is also used to load and unload various plant components used in conjunction with the Radioactive Waste Processing Building. Different grab systems are provided to manipulate the various containers, shielding casks, and drums. This crane is used to lift the HICs to trucks that transport them to final disposal. Power for the crane is provided from a non-safety-related electrical bus. The crane is remotely controlled and manually operated.

Drum Store Crane

The drum store crane installed in the drum store is used to transport the drums containing solid or dried waste from the drum transfer position to the dose rate measuring device to determine radiation levels in the drum. After dose rate measuring is complete, the crane then moves the drums to a temporary storage location in the drum store or tubular shaft store, depending upon radiation levels in the drum.

Drum Store

The drum store is a room located in the Radioactive Waste Processing Building and is used for temporary storage of low level radioactive waste treated by the solid waste processing system. The drums can be stacked a maximum of five drums high to optimize the available storage space. The drums are stored for a sufficient time to allow the short-lived radionuclides to decay before shipping offsite in accordance with BTP ETSB 11-3 and ALARA requirements.

Tubular Shaft Store

The higher activity waste is stored in tubular shafts that are formed from concrete and are part of the Radioactive Waste Processing Building. The waste includes solid waste, such as spent filter cartridges, as well as treated spent resins that may be combined with sludge and evaporator concentrates from the radioactive waste concentrates processing system. The drum store crane is used to place drums into and remove drums from the tubular shaft store. The drums are stored for a sufficient time to allow the short-lived radionuclides to decay before shipping offsite in accordance with BTP ETSB 11-3 and ALARA requirements.

11.4.2.3.2 Radioactive Concentrates Processing System Components (Wet Solid Wastes)

11.04-5

The piping and equipment for these components, as shown in Figure 11.4-2—Radioactive Concentrates Processing System, are constructed of stainless steel to avoid corrosion caused by wastewater, demineralized water, chemicals, and decontamination wastes.

Figure 11.4-2—Radioactive Concentrates Processing System

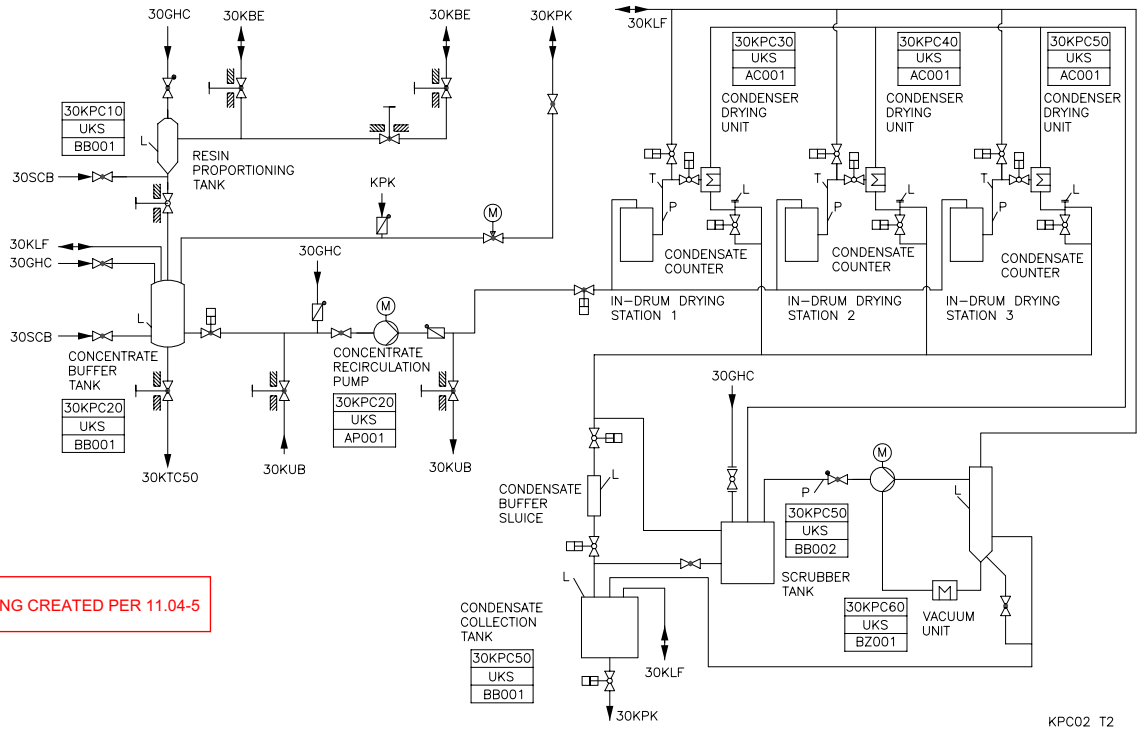

DRAWING CREATED PER 11.04-5

Next File