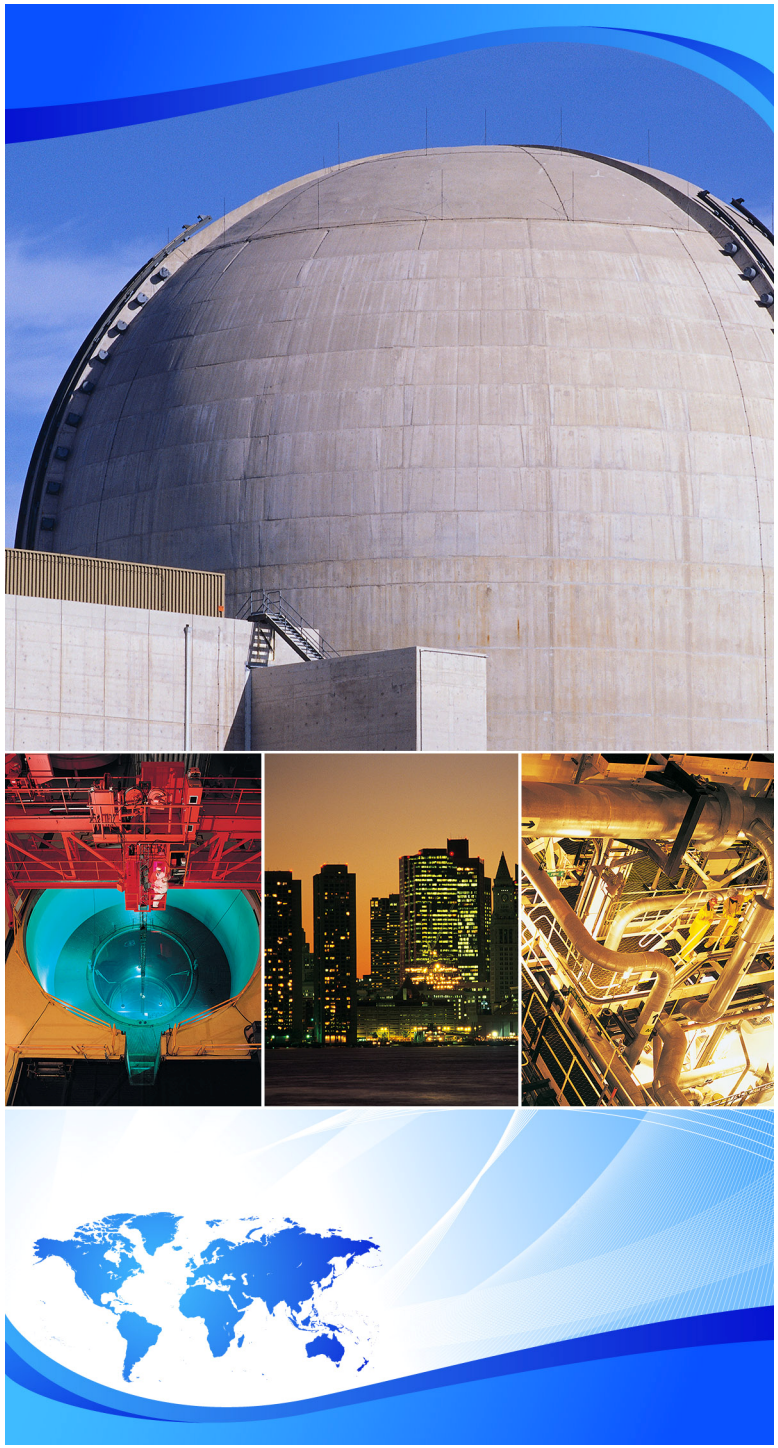

ELECTRIC POWER RESEARCH INSTITUTE

# NDE Considerations Associated with Alloy 600 Mitigation Methods

PDI/NRC May 2009

Carl Latiolais
Senior Program Manager

Appendix VIII Performance Demonstration

# Outline

- Background
- Mechanical Stress Improvement Process (MSIP)
- Weld Overlay
- Inlay Technology
- Onlay Technology
- Others

© 2009 Electric Power Research Institute, Inc. All rights reserved.

# Background

- The discovery of Primary Water Stress Corrosion Cracking (PWSCC) has caused the industry to develop solutions for mitigation of Alloy 600 locations
- Each method has specific NDE requirements
- NRC has mandated that the mitigated components be inspectable after application

© 2009 Electric Power Research Institute, Inc. All rights reserved.

# Mechanical Stress Improvement Process (MSIP)

- Process
  - OD deformation applied mechanically (clamp)
    - Puts inside surface (inner 30%) in compression
- Prerequisites
  - Must have access to outside surface to place equipment
  - Must ensure that no flaws greater than 30% through wall are present
    - Deeper flaws that have grown out of compressed zone may not be mitigated
- Inspection Issues
  - Susceptible material must be examined prior to and after application
    - Configuration may not allow for examination
    - If adequate coverage cannot be obtained technical basis to MSIP process is challenged

© 2009 Electric Power Research Institute, Inc. All rights reserved.

# Weld Overlay

- Process
  - Application of resistant material to the outside surface of the component
    - Puts inside surface in compression
    - Resistant material provides added assurance that no flaws will leak
    - Design ensures structural integrity of component even if small flaws are present
      - Removes driving stresses
      - Design assumes flaws are present up to 100% of wall thickness
    - If applied properly, can improve the examination access for inspection

© 2009 Electric Power Research Institute, Inc. All rights reserved.

# Weld Overlay (Cont.)

- Prerequisites
  - Must have access to outside surface
  - Must be able to mount welding equipment
  - Configuration must allow for application of the weld material
- Inspection Issues
  - Overlay must be designed to allow for inspection
    - 100% coverage is required.
    - Overlays over complex configurations require complex scan plans to be developed in order to ensure coverage with qualified techniques
      - Multiple search units may be needed

© 2009 Electric Power Research Institute, Inc. All rights reserved.

# Weld Overlay (Cont.)

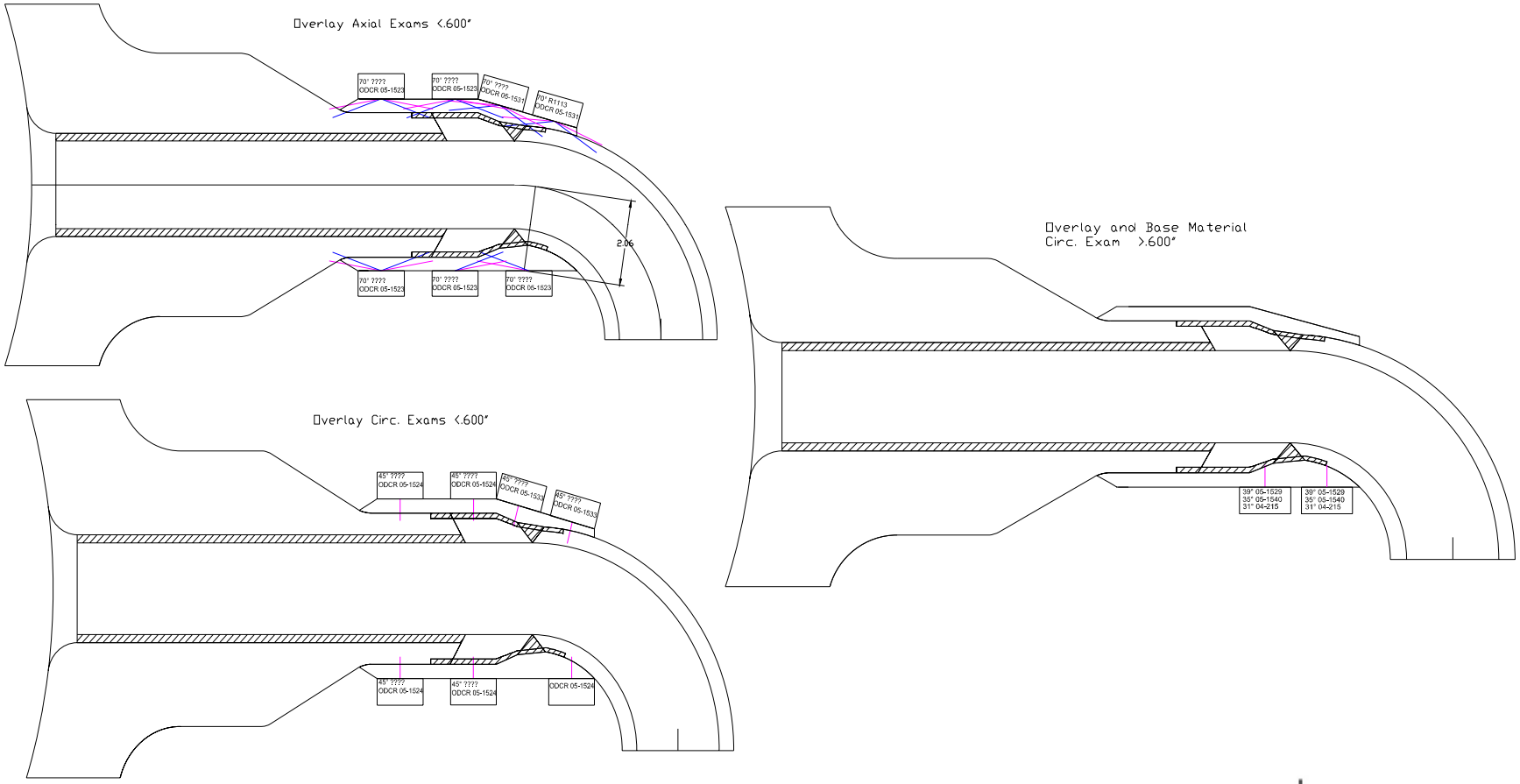


© 2009 Electric Power Research Institute, Inc. All rights reserved.



ELECTRIC POWER RESEARCH INSTITUTE

# Weld Overlay (Cont.)

- Future Applications
  - Optimized design overlays
    - Thinner
    - Applied quicker
    - Design assumes smaller flaw (75% Through-wall)
  - Target application area
      - Large diameter thick components
  - Requires examination of a larger portion of the original base material under the overlay
    - Upper 50% verses upper 25%

© 2009 Electric Power Research Institute, Inc. All rights reserved.

# Weld Overlay (Cont.)

- Optimized design overlay applications have not been approved by NRC yet
  - Requires use of relief request
  - Technical basis covered in MRP-169
  - NRC is reviewing welding and NDE processes
    - Two technical hands on meetings have been completed to review NDE approach
  - Target application Fall 2009
  - Current procedures and personnel qualifications must be expanded to cover this application

© 2009 Electric Power Research Institute, Inc. All rights reserved.

# Inlay Technology

- Process
  - Machine away a small portion of the susceptible material at the inside surface
  - Apply protective 52M layer
  - Machine smooth after application
  - Resistant material will isolate the susceptible material from RCS Coolant
  - Compliance with Design Basis

© 2009 Electric Power Research Institute, Inc. All rights reserved.

# Inlay Technology (Cont.)

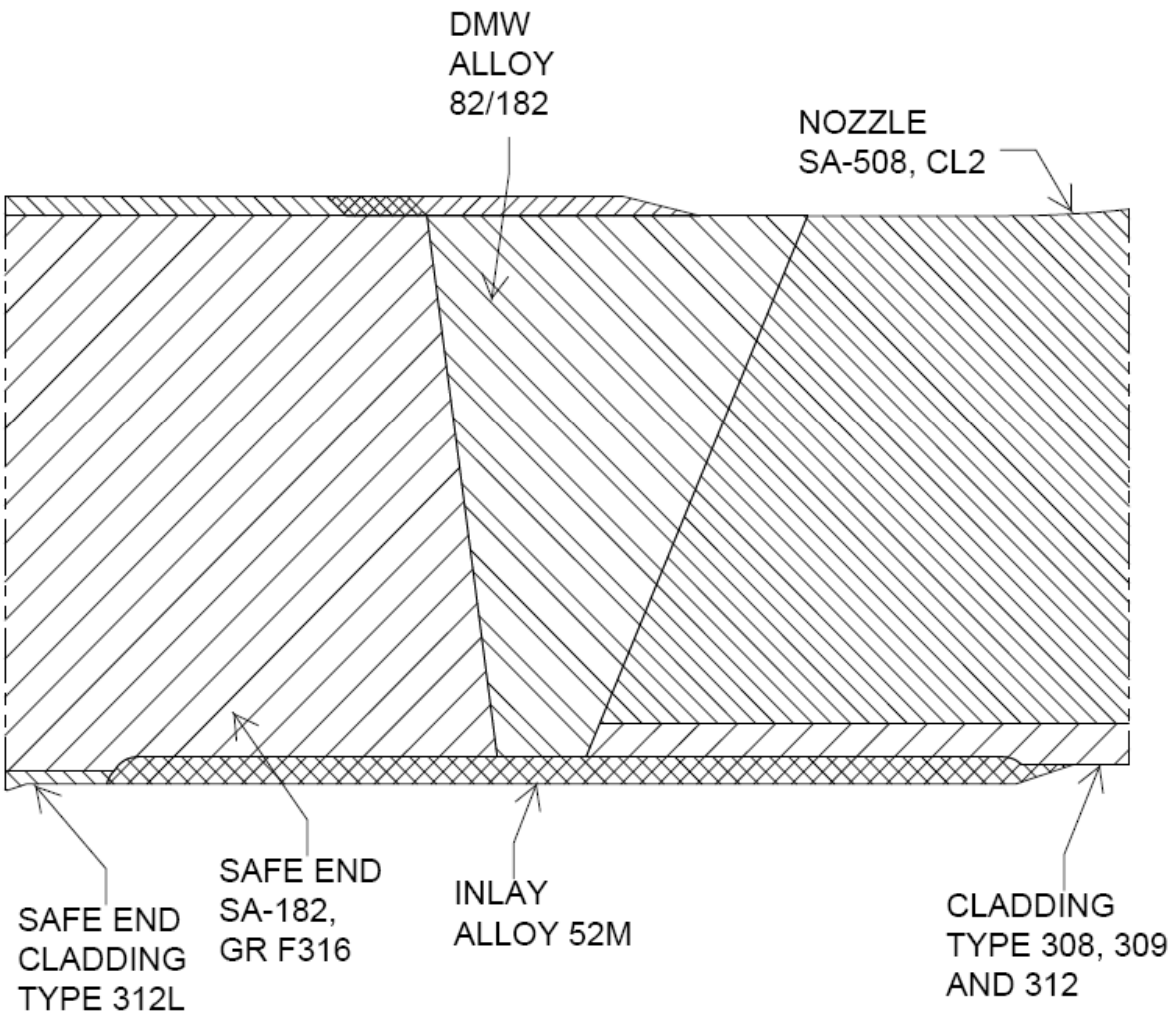


© 2009 Electric Power Research Institute, Inc. All rights reserved.



ELECTRIC POWER RESEARCH INSTITUTE

# Inlay Technology (Cont.)

- Prerequisites
  - Inspection of 100% of susceptible material must be performed prior to application
  - Unacceptable flaws must be repaired or evaluated prior to application
  - Relief request may be needed if temper bead welding is required
    - Depends on thickness of clad near ferritic material

© 2009 Electric Power Research Institute, Inc. All rights reserved.

# Inlay Technology (Cont.)

- Inspection Issues
  - Current Appendix VIII procedures are not qualified to examine weld with corrosion resistant cladding
    - Supplement 10 excludes it from qualification
  - Industry has performed evaluations to show that existing procedures applied from inside surface are capable of examining inlaid components
    - Mock-ups fabricated
    - Practical trials
    - See Reports
      - *"Ultrasonic Equivalency Testing of Weld Inlaid Components – 1016543"*
      - *"Ultrasonic Equivalency Testing of Weld Inlaid and Onlaid Components -1016655"*

© 2009 Electric Power Research Institute, Inc. All rights reserved.

# Inlay Technology (Cont.)

- All inlaid components must meet the acceptance standards of CC-770
  - Acceptance standards are stringent
- If unacceptable flaws are detected prior to inlay and repair is needed additional NDE may be required
  - Radiography (RT) if possible
  - UT in lieu of RT
    - Will require relief request

© 2009 Electric Power Research Institute, Inc. All rights reserved.

# Inlay Technology (Cont.)

- Future Work
  - Finalize code cases
  - Obtain acceptance of process from USNRC via relief requests
  - Planned application fall 2009 DC Cook

© 2009 Electric Power Research Institute, Inc. All rights reserved.

# Onlay Technology

- Process
  - Apply non-structural layer of weld material on the inside surface, over the existing weld, cladding and safe-end material
    - Leaves bump on pipe
      - Not desirable where flow is important factor
    - Isolates susceptible material from reactor environment
    - Ensure inspectable surface
  - Meet existing ASME rules for design & installation of cladding and be compliance with draft Code Case N-770

© 2009 Electric Power Research Institute, Inc. All rights reserved.

# Onlay Technology

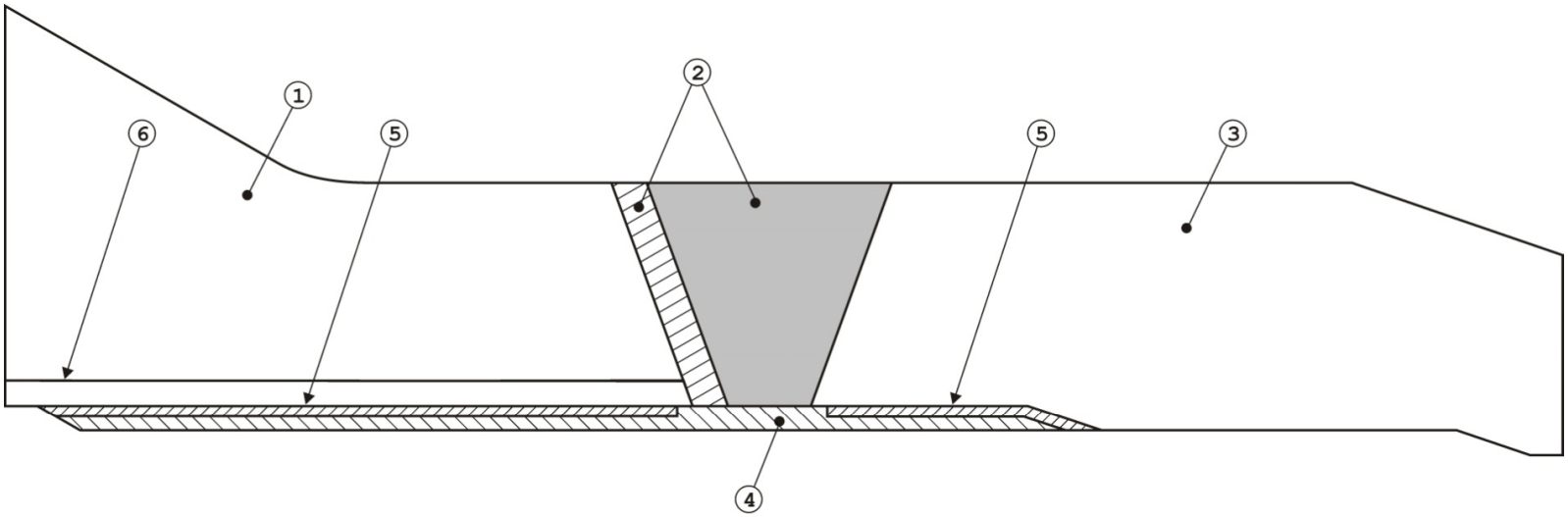


| PARTS LIST | | MATERIALS |
|---|---|---|
| 1. | NOZZLE FORGING | A-508 CL.2 |
| 2. | WELD/BUTTER | ALLOY 82/182 |
| 3. | SAFE-END | SA-336 GR.F8M |
| 4. | WELD ONLAY | ALLOY 52M |
| 5. | BUFFER LAYER | ER308L |
| 6. | CLADDING | ER308L |

© 2009 Electric Power Research Institute, Inc. All rights reserved.



ELECTRIC POWER RESEARCH INSTITUTE

# Onlay Technology (Cont.)

- Prerequisites and inspection issues are the same as with inlay applications
- Future Applications
  - Onlay successfully applied at Arkansas Nuclear One (ANO-1) in fall of 2008
    - Core Flood nozzles (B&W Design)
    - One other application planned for fall 2009

© 2009 Electric Power Research Institute, Inc. All rights reserved.

# Summary

- Several mitigation processes are being developed
- NDE must be considered in the application of any of these processes
- Continued work is underway to gain approval of these processes, but the capability to do reliable NDE is key consideration in every application proposed

© 2009 Electric Power Research Institute, Inc. All rights reserved.