Comparison of the Estimated Loads and Actual Loads for RCL Components and Piping Nozzles

Non-Proprietary Version

May 2009

**©2009 Mitsubishi Heavy Industries, Ltd.
All Rights Reserved**

Revision History

Revision	Page	Description
0	All	Original Issue

© 2009
MITSUBISHI HEAVY INDUSTRIES, LTD.
All Rights Reserved

This document has been prepared by Mitsubishi Heavy Industries, Ltd. (MHI) in connection with the U.S. Nuclear Regulatory Commission's (NRC) licensing review of MHI's US-APWR nuclear power plant design. No right to disclose, use or copy any of the information in this document, other that by the NRC and its contractors in support of the licensing review of the US-APWR, is authorized without the express written permission of MHI.

This document contains technology information and intellectual property relating to the US-APWR and it is delivered to the NRC on the express condition that it not be disclosed, copied or reproduced in whole or in part, or used for the benefit of anyone other than MHI without the express written permission of MHI, except as set forth in the previous paragraph.

This document is protected by the laws of Japan, U.S. copyright law, international teaties and conventions, and the applicable laws of any country where it is being used.

Mitsubishi Heavy Industries, Ltd.
16-5, Konan 2-chome, Minato-ku
Tokyo 108-8215 Japan

Abstract

This report provides a comparison of the estimated loads and actual loads for Reactor Coolant Loop (RCL) components and piping nozzles.

The RCL components/piping nozzle loads were conservatively determined as estimated loads reflecting the RCL branch piping and Main Steam (MS) piping preliminary analysis results. These estimated loads were provided in the technical report MUAP-09002-P, Rev.1 “Summary of Seismic and Accident Load Conditions for Primary Components and Piping” (Reference 1).

From the results summarized in this report, it is concluded that the estimated loads envelope the actual loads obtained from the analysis of RCL branch piping and MS piping.

Table of Contents

List of Tables ii

List of Figures iii

List of Acronyms iv

1.0 INTRODUCTION 1-1

2.0 METHODOLOGIES 2-1

3.0 RESULTS 3-1

4.0 CONCLUSION 4-1

5.0 REFERENCES 5-1

List of Tables

Table 3-1	**List of Tables and Figures of comparison between the estimated loads and the actual loads**	**3-1**
Table 3-2	**Seismic Loads of Nozzles on RV, SG, MCP**	**3-2**
Table 3-3	**Accident Loads of Nozzles on RV, SG, MCP**	**3-4**
Table 3-4	**Seismic Loads of PZR Nozzles**	**3-5**
Table 3-5	**Accident Loads of PZR Nozzles**	**3-5**

List of Figures

Figure 3-1	**RV Nozzles**	**3-6**
Figure 3-2	**SG Nozzles**	**3-7**
Figure 3-3	**RCP Nozzle**	**3-8**
Figure 3-4	**MCP Nozzles**	**3-9**
Figure 3-5	**PZR Nozzles**	**3-10**

List of Acronyms

The following list defines the acronyms used in this document.

CVCS	**Chemical and Volume Control System**
DVI	**Direct Vessel Injection**
FW	**Feedwater**
MCP	**Main Coolant Piping**
MS	**Main Steam**
NRC	**U.S. Nuclear Regulatory Commission**
PZR	**Pressurizer**
RCL	**Reactor Coolant Loop**
RCP	**Reactor Coolant Pump**
RHR	**Residual Heat Removal**
RV	**Reactor Vessel**
SG	**Steam Generator**
SI	**Safety Injection**

1.0 INTRODUCTION

The seismic and accident nozzle loads for RCL components/piping were conservatively determined as estimated loads in the technical report (Reference 1).

This technical report describes the comparison between these estimated loads and the actual loads obtained from the analysis results of RCL branch piping and MS piping to confirm the conservativeness of these estimated loads.

2.0 METHODOLOGIES

Actual nozzle loads results were obtained from the RCL branch piping and MS piping analysis as the anchor point reaction loads.

The RCL branch piping and MS piping analysis methodologies are described in the technical reports MUAP-09011-P, Rev.0 “Summary of Stress Analysis Results for the US-APWR Reactor Coolant Loop Branch Piping” (Reference 2) and MUAP-09013-P, Rev.0 “Summary of Stress Analysis Results for the US-APWR Main Steam Piping inside Containment Vessel” (Reference 3).

3.0 RESULTS

Following tables show the comparison between the estimated loads and the actual loads. These tables show that all estimated loads envelope the actual loads.

Table 3-1 List of Tables and Figures of comparison between the estimated loads and the actual loads

Load Type	Nozzle Location	Seismic Load	Accident Load	Coordinate System
Nozzle Load	RV Vent	Table 3-2	Table 3-3	Figure 3-1
	RV DVI			
	SG MS			Figure 3-2
	SG FW			
	RCP Seal Water Injection			Figure 3-3
	MCP Pressurizer Surge			Figure 3-4
	MCP Pressurizer Spray			
	MCP CVCS Letdown and Loop Drain			
	MCP Charging			
	MCP RHRS/SIS			
	MCP Accumulator Tank			
	PZR Surge	Table 3-4	Table 3-5	Figure 3-5
	PZR Spray			
	PZR Safety Valve			
	PZR Safety Depressurization Valve			

Table 3-2 Seismic Loads of Nozzles on RV, SG, MCP

Nozzle Location	Coordinate System	Load		Force (kips)			Moment (kips-in)		
				Fx	Fy	Fz	Mx	My	Mz
RV Vent	Figure 3-1	Estimated							
		Actual		__(1)	__(1)	__(1)	__(1)	__(1)	__(1)
RV DVI		Estimated							
		Actual	Loop A						
			Loop B						
SG MS	Figure 3-2	Estimated							
		Actual	Loop A						
			Loop B						
SG FW		Estimated							
		Actual	Loop A						
			Loop B						
RCP Seal Water Injection	Figure 3-3	Estimated							
		Actual	Loop A						
			Loop B						
			Loop C		(2)				(2)
			Loop D						
MCP Pressurizer Surge	Figure 3-4	Estimated							
		Actual							
MCP Pressurizer Spray		Estimated							
		Actual	Loop B						
			Loop C						
MCP CVCS Letdown and Loop Drain		Estimated							
		Actual							
MCP Charging		Estimated							
		Actual							
MCP RHRS/SIS		Estimated							
		Actual	Loop A						
			Loop B						
MCP Accumulator Tank		Estimated							
		Actual	Loop A						
			Loop B						

Notes:

1. RV Vent nozzle is not classified in risk significant piping and is going to be analyzed prior to material procurement in accordance with MHI's commitment letter (Reference 4)

2. Actual loads components of RCP Seal Water Injection Loop C line nozzle, components of force (Fy) and moment (Mz), are greater than estimated loads components. However, it is confirmed that the results satisfy all of the applicable structural limits.

Table 3-3 Accident Loads of Nozzles on RV, SG, MCP

Nozzle Location	Coordinate System	Load		Force (kips)			Moment (kips-in)		
				Fx	Fy	Fz	Mx	My	Mz
RV Vent	Figure 3-1	Estimated							
		Actual		__(1)	__(1)	__(1)	__(1)	__(1)	__(1)
RV DVI		Estimated							
		Actual	Loop A						
			Loop B						
SG MS	Figure 3-2	Estimated							
		Actual	Loop A						
			Loop B						
SG FW		Estimated							
		Actual	Loop A						
			Loop B						
RCP Seal Water Injection	Figure 3-3	Estimated							
		Actual	Loop A						
			Loop B						
			Loop C						
			Loop D						
MCP Pressurizer Surge	Figure 3-4	Estimated							
		Actual							
MCP Pressurizer Spray		Estimated							
		Actual	Loop B						
			Loop C						
MCP CVCS Letdown and Loop Drain		Estimated							
		Actual							
MCP Charging		Estimated							
		Actual							
MCP RHRS/SIS		Estimated							
		Actual	Loop A						
			Loop B						
MCP Accumulator Tank		Estimated							
		Actual	Loop A						
			Loop B						

Note:

1. RV Vent nozzle is not classified in risk significant piping and is going to be analyzed prior to material procurement in accordance with MHI's commitment letter (Reference 4)

Table 3-4 Seismic Loads of PZR Nozzles

Nozzle Location	Coordinate System	Load	Forces (kips)			Moment (kips-in)		
			Fx	Fy	Fz	Mx	My	Mz
PZR Surge	Figure 3-5	Estimated						
		Actual						
PZR Spray		Estimated						
		Actual						
PZR Safety Valve		Estimated						
		Actual						
PZR Safety Depressurization Valve		Estimated						
		Actual						

Table 3-5 Accident Loads of PZR Nozzles

Nozzle Location	Coordinate System	Load	Forces (kips)			Moment (kips-in)		
			Fx	Fy	Fz	Mx	My	Mz
PZR Surge	Figure 3-5	Estimated						
		Actual						
PZR Spray		Estimated						
		Actual						
PZR Safety Valve		Estimated						
		Actual						
PZR Safety Depressurization Valve		Estimated						
		Actual						

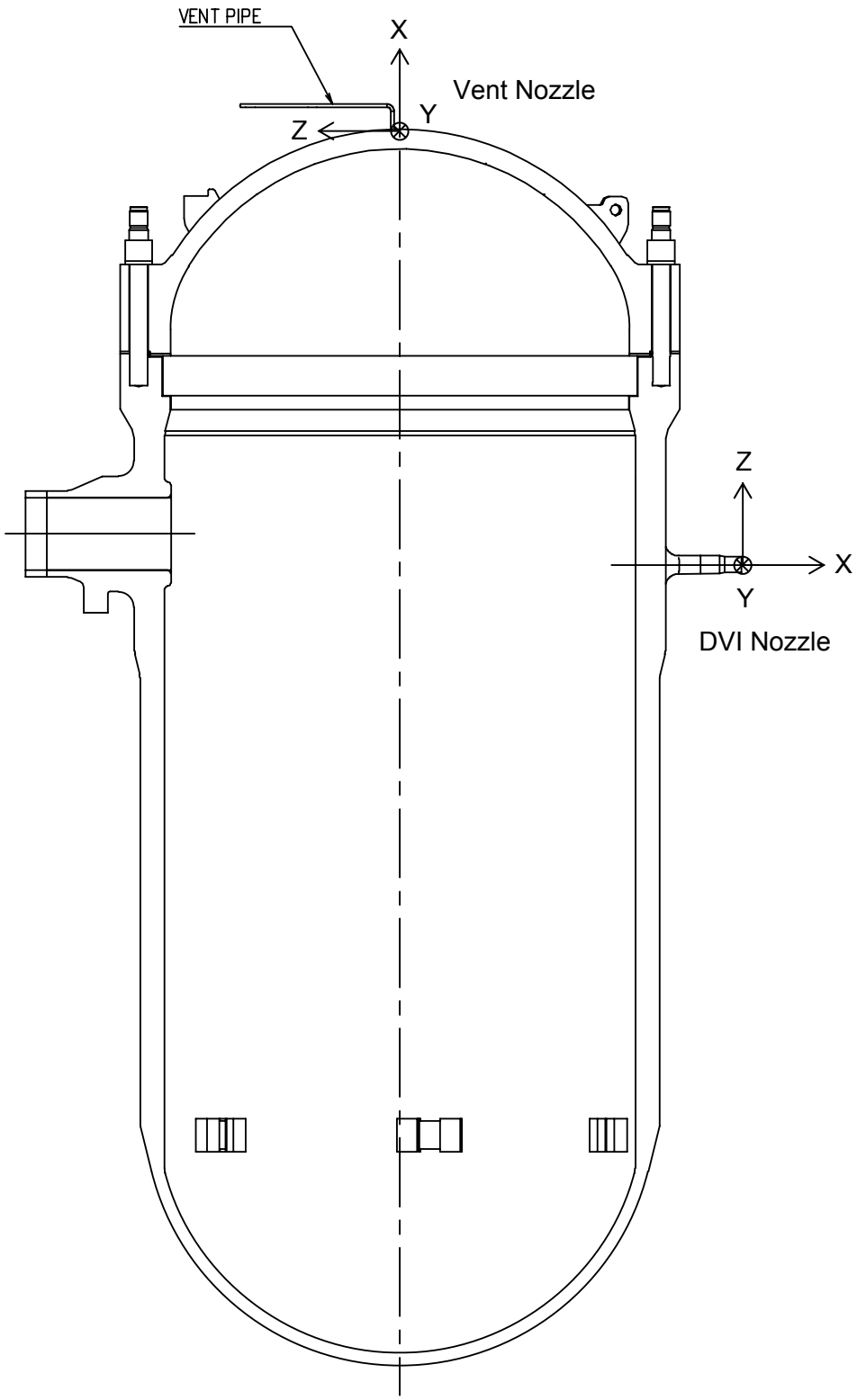

Figure 3-1 RV Nozzles

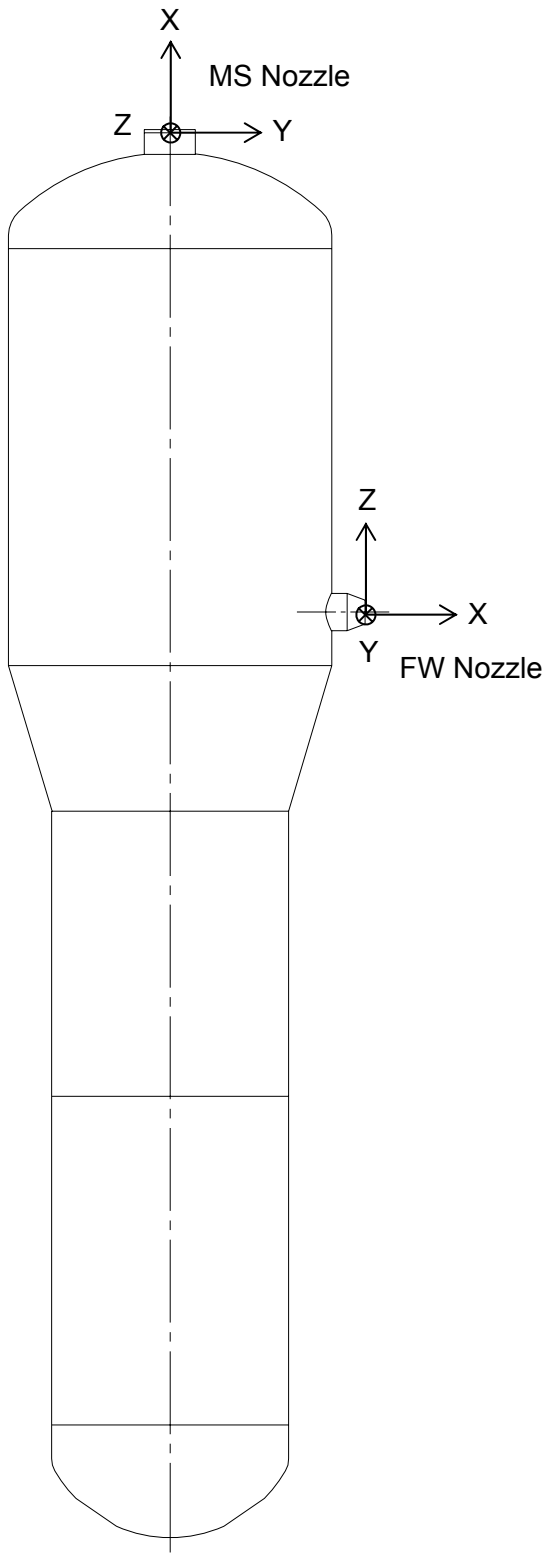

Figure 3-2 SG Nozzles

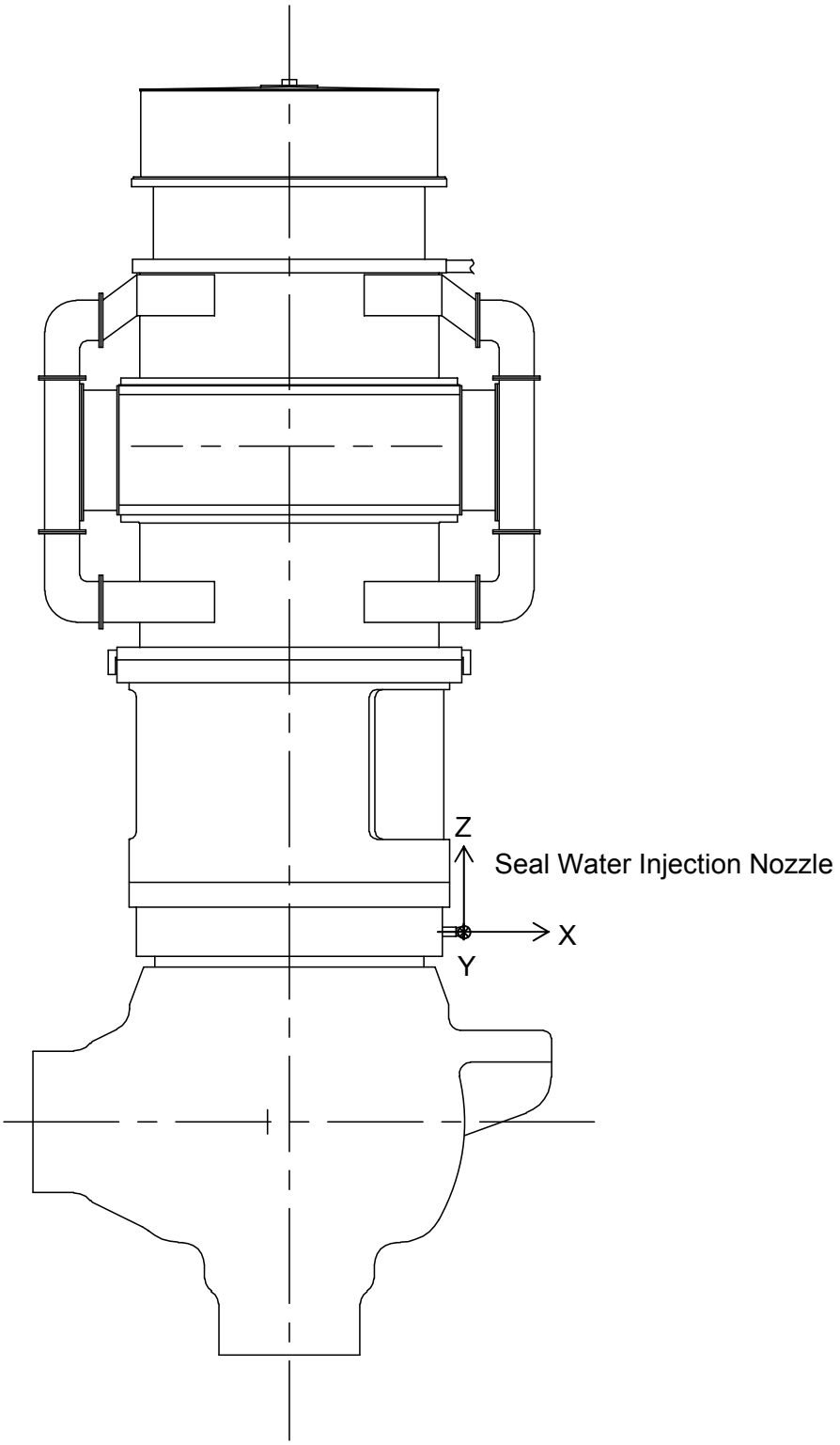

Figure 3-3 RCP Nozzle

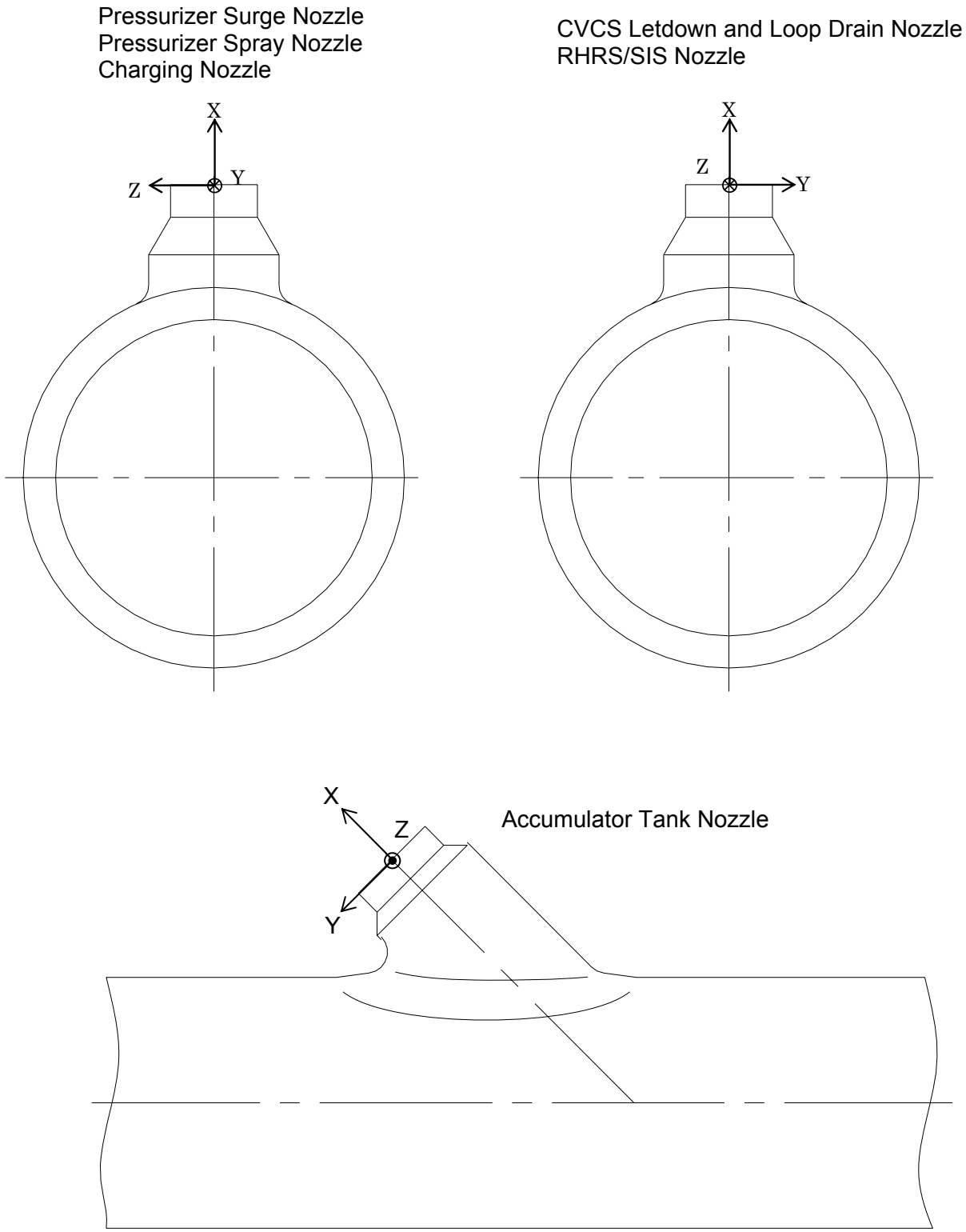

Figure 3-4 MCP Nozzles

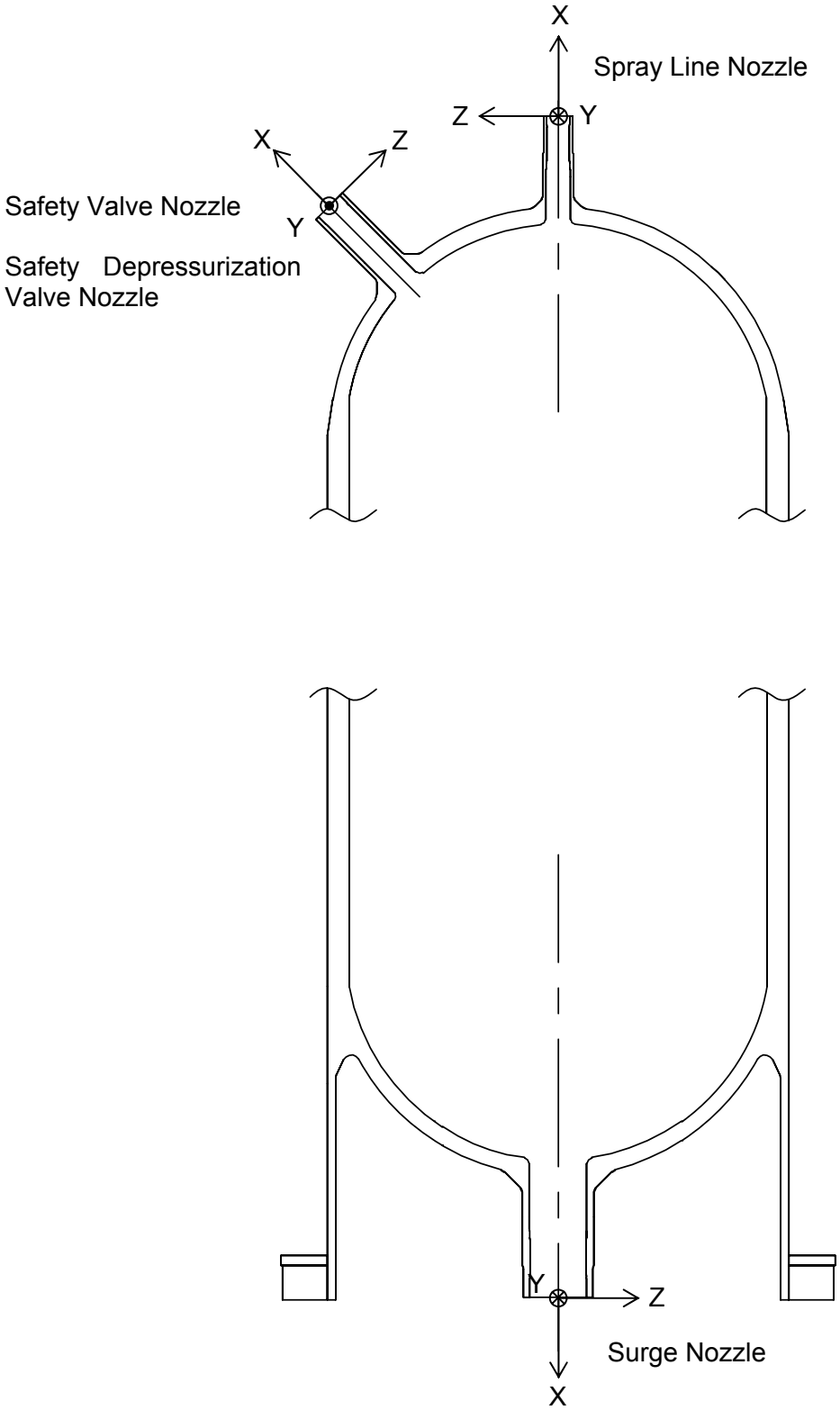

Figure 3-5 PZR Nozzles

4.0 CONCLUSION

From the results of the comparison between the estimated loads and the actual loads, it is confirmed that the estimated loads of the RCL components/piping nozzle loads are conservative.

Stress analyses of RCL components/piping were performed using estimated loads for evaluating the nozzles of RCL components/piping. As the results of stress analyses, it is concluded that the structural integrity of RCL components/piping is maintained under actual load.

5.0 REFERENCES

1. Summary of Seismic and Accident Load Conditions for Primary Components and Piping. Mitsubishi Heavy Industries, Technical Report MUAP-09002-P Rev.1, March 2009.

2. Summary of Stress Analysis Results for the US-APWR Reactor Coolant Loop Branch Piping. Mitsubishi Heavy Industries, Technical Report MUAP-09011-P Rev.0, March 2009.

3. Summary of Stress Analysis Results for the US-APWR Main Steam Piping inside Containment Vessel. Mitsubishi Heavy Industries, Technical Report MUAP-09013-P Rev.0, March 2009.

4. Additional Information for Design Completion Plan of US-APWR Piping and Components. Mitsubishi Heavy Industries, Commitment Letter UAP-HF-08123, July, 2008.