BSC

Design Calculation or Analysis Cover Sheet

Complete only applicable items.

1. QA: QA
2. Page 1

3. System	4. Document Identifier
DOE and Commercial Waste Package	060-00C-DS00-00100-000-00A

5. Title
Thermal Evaluation of the CRCF-1 Lower Transfer Room Cells

6. Group
Thermal Structural Analysis

7. Document Status Designation
☐ Preliminary ☒ Committed ☐ Confirmed ☐ Cancelled/Superseded

8. Notes/Comments

FLUENT electronic files checked by Hongyan Marr. Remainder checked by Daniel Wang.

Attachments	Total Number of Pages
See Section 5	

RECORD OF REVISIONS

9. No.	10. Reason For Revision	11. Total # of Pgs.	12. Last Pg. #	13. Originator (Print/Sign/Date)	14. Checker (Print/Sign/Date)	15. EGS (Print/Sign/Date)	16. Approved/Accepted (Print/Sign/Date)
00A	Initial issue.	143	143	Tim deBues 10/1/07	Daniel Wang 10/1/07 Hongyan Marr 10/1/07	Del Mecham 10/1/07	Michael J. Anderson by 10/1/07

DISCLAIMER

The calculations contained in this document were developed by Bechtel SAIC Company, LLC (BSC) and are intended solely for the use of BSC in its work for the Yucca Mountain Project.

CONTENTS

Page

ACRONYMS 12

1. PURPOSE 13

2. REFERENCES 14
   2.1 PROCEDURES/DIRECTIVES 14
   2.2 DESIGN INPUTS 14
   2.3 DESIGN CONSTRAINTS 18
   2.4 DESIGN OUTPUTS 18

3. ASSUMPTIONS 19
   3.1 ASSUMPTIONS REQUIRING VERIFICATION 19
   3.2 ASSUMPTIONS NOT REQUIRING VERIFICATION 25

4. METHODOLOGY 31
   4.1 QUALITY ASSURANCE 31
   4.2 USE OF SOFTWARE 31
   4.3 METHOD 33

5. LIST OF ATTACHMENTS 34

6. BODY OF CALCULATION 35
   6.1 3-D FLUENT AND ANSYS MODELS 37
   6.2 2-D ANSYS MODELS OF WASTE PACKAGE IN TROLLEY TUBE 43
   6.3 THERMAL PROPERTIES 47
   6.4 HEAT LOADS 60
   6.5 BOUNDARY CONDITIONS 61

7. RESULTS AND CONCLUSIONS 64
   7.1 THERMAL LIMITS 64
   7.2 RESULTS FOR NORMAL CONDITION 65
   7.3 RESULTS FOR OFF-NORMAL CASE WITH REDUCED FLOW (ITS EXHAUST) 77
   7.4 RESULTS FOR OFF-NORMAL CASE WITH NO FLOW 86
   7.5 SUMMARY AND CONCLUSIONS 100

ATTACHMENT I. AVERAGE AIR TEMPERATURES FROM FLUENT OFF-NORMAL CASES 104

ATTACHMENT II. E-MAIL REGARDING TROLLEY TUBE SHIELDING THICKNESSES 105

ATTACHMENT III. E-MAIL REGARDING CRCF AIR FLOW RATES 107

ATTACHMENT IV. FILE LISTING FOR ATTACHMENT V 112

ATTACHMENT V. DVD'S CONTAINING ELCTRONIC FILES .....N/A
ATTACHMENT VI. CONCRETE TEMPERATURE HISTORIES, OFF-NORMAL CONDITION, NO FLOW 137

FIGURES

Page

Figure 1. Room Locations in the CRCF-1 Relative to Each Other (not to scale) 36
Figure 2. 3-D FLUENT Representation of Rooms 1022 and 1023 40
Figure 3. 3-D FLUENT Representation of Rooms 1019 and 1021 41
Figure 4. 3-D ANSYS Representation of Rooms 1022 and 1023 42
Figure 5. 3-D ANSYS Representation of Rooms 1019 and 1021 43
Figure 6. 2-D ANSYS Representation of 5-DHLW/DOE SNF Short Waste Package in the Trolley Tube.....46
Figure 7. 2-D ANSYS Representation of TAD Waste Package in the Trolley Tube.....47
Figure 8. Temperatures (°C) Through Hottest Portion of Rooms 1022 and 1023, Normal Operations, Case 4 67
Figure 9. Temperatures (°C) Through Hottest Portion of Rooms 1022 and 1023, Normal Operations, Case 5 68
Figure 10. Ceiling Temperature (°C) of Room 1023, Normal Operations, Case 5 69
Figure 11. Ceiling Temperature (°C) of Room 1019, Normal Operations, Case 5 73
Figure 12. Temperatures (°C) Through Hottest Portion of Rooms 1022 and 1023, Off-Normal, Reduced Flow, Case 5 79
Figure 13. Peak Concrete Temperature Histories (°C) – Room 1022, Off-Normal, No Flow, 30 kW.....89
Figure 14. Temperatures (°C) Through Hottest Portion of Rooms 1022 and 1023, Off-Normal, No Flow, 30 kW 90
Figure 15. Temperature History (°C) for TAD WP in Trolley Tube (11.8 kW, $k_{\text{NS-4-FR}}$ = 6.5 W/m-K) 96
Figure 16. Temperature History (°C) for TAD WP in Trolley Tube (18 kW, $k_{\text{NS-4-FR}}$ = 6.5 W/m-K) 96
Figure 17. Temperature History (°C) for TAD WP in Trolley Tube (25 kW, $k_{\text{NS-4-FR}}$ = 6.5 W/m-K) 97
Figure 18. Temperature History (°C) for TAD WP in Trolley Tube (30 kW, $k_{\text{NS-4-FR}}$ = 6.5 W/m-K) 97
Figure 19. Peak Concrete Temperature Histories (°C) – Room 1022, Off-Normal, No Flow, 11.8 kW.....137
Figure 20. Peak Concrete Temperature Histories (°C) – Room 1022, Off-Normal, No Flow, 18 kW.....138

Figure 21. Peak Concrete Temperature Histories (°C) – Room 1022, Off-Normal, No Flow, 25 kW....138

Figure 22. Peak Concrete Temperature Histories (°C) – Room 1022, Off-Normal, No Flow, 30 kW....139

Figure 23. Peak Concrete Temperature Histories (°C) – Room 1023, Off-Normal, No Flow, 11.8 kW....139

Figure 24. Peak Concrete Temperature Histories (°C) – Room 1023, Off-Normal, No Flow, 18 kW....140

Figure 25. Peak Concrete Temperature Histories (°C) – Room 1023, Off-Normal, No Flow, 25 kW....140

Figure 26. Peak Concrete Temperature Histories (°C) – Room 1023, Off-Normal, No Flow, 30 kW....141

Figure 27. Peak Concrete Temperature Histories (°C) – Room 1019, Off-Normal, No Flow, 11.8 kW....141

Figure 28. Peak Concrete Temperature Histories (°C) – Room 1019, Off-Normal, No Flow, 18 kW....142

Figure 29. Peak Concrete Temperature Histories (°C) – Room 1019, Off-Normal, No Flow, 25 kW....142

Figure 30. Peak Concrete Temperature Histories (°C) – Room 1019, Off-Normal, No Flow, 30 kW....143

Figure 31. Peak Concrete Temperature Histories (°C) – Room 1021, Off-Normal, No Flow, 9.47 kW....143

TABLES

Page

Table 1. CRCF-1 Lower Transfer Room Cells....13
Table 2. List of Attachments....34
Table 3. Waste Form Configuration Within CRCF-1....35
Table 4. Building Dimensions Used in the 3-D FLUENT and ANSYS Representations....38
Table 5. Waste Form Dimensions Used in the 3-D FLUENT and ANSYS Representations....38
Table 6. Normal HVAC Air Flows....39
Table 7. Off-Normal (ITS Exhaust) Air Flows....39
Table 8. Trolley Tube Dimensions....44
Table 9. 5-DHLW/DOE SNF Short Waste Package Dimensions....44
Table 10. TAD Waste Package Dimensions....45
Table 11. HLW and DOE SNF Canister Dimensions....45
Table 12. Materials Used in the 3-D Representations....48
Table 13. Materials Used in the Representations of the 5-DHLW / DOE SNF Short Waste Package....48
Table 14. Materials Used in the Representations of the TAD Waste Package....49
Table 15. Materials Used in the Representations of the Trolley Tube....49
Table 16. Effective Thermal Properties of 3-D Waste Package in the Trolley Tube....50
Table 17. Effective Thermal Properties of TAD Canister....51
Table 18. Density and Emissivity of Alloy 22....51
Table 19. Thermal Conductivity of Alloy 22....51
Table 20. Specific Heat of Alloy 22....52
Table 21. Density and Emissivity of 316 SS and 316L SS....52
Table 22. Thermal Conductivity, Thermal Diffusivity, and Specific Heat of 316 SS and 316L SS....53
Table 23. Density and Emissivity of 516 CS....54
Table 24. Thermal Conductivity, Thermal Diffusivity, and Specific Heat of 516 CS....54
Table 25. Density and Emissivity of 304L SS....55
Table 26. Thermal Conductivity, Thermal Diffusivity, and Specific Heat of 304L SS....55
Table 27. Density, Thermal Conductivity, and Specific Heat of Borosilicate Glass....56
Table 28. Density, Thermal Conductivity, and Specific Heat of NS-4-FR....56

Table 29. Thermal Properties of Concrete....56
Table 30. Thermal Properties of the Shield Door....57
Table 31. Thermal Properties of Air Used in FLUENT Calculations....57
Table 32. Density, Thermal Conductivity, and Specific Heat of Air Used in ANSYS Calculations....58
Table 33. Density, Thermal Conductivity, and Specific Heat of Helium Used in ANSYS Calculations....59
Table 34. Temperature Boundary Conditions for Normal Operations Case....62
Table 35. Ambient Temperatures Used to Obtain Initial Conditions in 3-D ANSYS Models....63
Table 36. 3-D FLUENT cases for Rooms 1022 & 1023, Normal Condition....65
Table 37. Peak TAD Canister Temperatures in Room 1022, Normal Condition....65
Table 38. Peak Trolley Tube Surface Temperatures in Room 1023, Normal Condition....66
Table 39. Peak Concrete Temperatures (°C) in Room 1022, Normal Condition....66
Table 40. Peak Concrete Temperatures (°F) in Room 1022, Normal Condition....66
Table 41. Peak Concrete Temperatures (°C) in Room 1023, Normal Condition....68
Table 42. Peak Concrete Temperatures (°F) in Room 1023, Normal Condition....69
Table 43. 3-D FLUENT cases for Rooms 1019 & 1021, Normal Condition....70
Table 44. Peak Trolley Tube Surface Temperatures in Room 1019, Normal Condition....70
Table 45. Peak DOE SNF Canister Temperatures in Room 1021, Normal Condition....71
Table 46. Peak DOE HLW Canister Temperatures in Room 1021, Normal Condition....71
Table 47. Peak Concrete Temperatures (°C) in Room 1019, Normal Condition....71
Table 48. Peak Concrete Temperatures (°F) in Room 1019, Normal Condition....72
Table 49. Peak Concrete Temperatures (°C) in Room 1021, Normal Condition....72
Table 50. Peak Concrete Temperatures (°F) in Room 1021, Normal Condition....72
Table 51. TAD Waste Package in Trolley Tube Peak Temperatures (°C), Normal Condition....74
Table 52. TAD Waste Package in Trolley Tube Peak Temperatures (°F), Normal Condition....74
Table 53. 5-DHLW/DOE SNF Short WP in Trolley Tube Peak Temperatures (°C), Normal Condition....75
Table 54. 5-DHLW/DOE SNF Short WP in Trolley Tube Peak Temperatures (°F), Normal Condition....76

Table 55. 5-DHLW/DOE SNF Short WP in Trolley Tube Peak Canister Temperatures (°C), Normal Condition 76
Table 56. 5-DHLW/DOE SNF Short WP in Trolley Tube Peak Canister Temperatures (°F), Normal Condition 76
Table 57. 3-D FLUENT cases for Rooms 1022 & 1023, Off-Normal, Reduced Flow 77
Table 58. Peak TAD Canister Temperatures in Room 1022, Off-Normal, Reduced Flow 77
Table 59. Peak Trolley Tube Surface Temperatures in Room 1023, Off-Normal, Reduced Flow 78
Table 60. Peak Concrete Temperatures (°C) in Room 1022, Off-Normal, Reduced Flow 78
Table 61. Peak Concrete Temperatures (°F) in Room 1022, Off-Normal, Reduced Flow 78
Table 62. Peak Concrete Temperatures (°C) in Room 1023, Off-Normal, Reduced Flow 79
Table 63. Peak Concrete Temperatures (°F) in Room 1023, Off-Normal, Reduced Flow 80
Table 64. 3-D FLUENT cases for Rooms 1019 & 1021, Off-Normal, Reduced Flow 80
Table 65. Peak Trolley Tube Surface Temperatures in Room 1019, Off-Normal, Reduced Flow 81
Table 66. Peak DOE SNF Canister Temperatures in Room 1021, Off-Normal, Reduced Flow 81
Table 67. Peak DOE HLW Canister Temperatures in Room 1021, Off-Normal, Reduced Flow 81
Table 68. Peak Concrete Temperatures (°C) in Room 1019, Off-Normal, Reduced Flow 82
Table 69. Peak Concrete Temperatures (°F) in Room 1019, Off-Normal, Reduced Flow 82
Table 70. Peak Concrete Temperatures (°C) in Room 1021, Off-Normal, Reduced Flow 82
Table 71. Peak Concrete Temperatures (°F) in Room 1021, Off-Normal, Reduced Flow 83
Table 72. TAD Waste Package in Trolley Tube Peak Temperatures (°C), Off-Normal, Reduced Flow 83
Table 73. TAD Waste Package in Trolley Tube Peak Temperatures (°F), Off-Normal, Reduced Flow 84
Table 74. 5-DHLW/DOE SNF Short WP in Trolley Tube Peak Temperatures (°C), Off-Normal, Reduced Flow 84
Table 75. 5-DHLW/DOE SNF Short WP in Trolley Tube Peak Temperatures (°F), Off-Normal, Reduced Flow 84
Table 76. 5-DHLW/DOE SNF Short WP in Trolley Tube Peak Canister Temperatures (°C), Off-Normal, Reduced Flow 85
Table 77. 5-DHLW/DOE SNF Short WP in Trolley Tube Peak Canister Temperatures (°F), Off-Normal, Reduced Flow 85

Table 78. 3-D ANSYS cases for Rooms 1022 & 1023, Off-Normal, No Flow 86
Table 79. Peak TAD Canister Temperatures in Room 1022, Off-Normal, No Flow, at 30 Days 86
Table 80. Peak Trolley Tube Surface Temperatures in Room 1023, Off-Normal, No Flow, at 30 Days 87
Table 81. Peak Concrete Temperatures (°C) in Room 1022, Off-Normal, No Flow, at 30 Days 87
Table 82. Peak Concrete Temperatures (°F) in Room 1022, Off-Normal, No Flow, at 30 Days 87
Table 83. Peak Concrete Temperatures (°C) in Room 1023, Off-Normal, No Flow, at 30 Days 88
Table 84. Peak Concrete Temperatures (°F) in Room 1023, Off-Normal, No Flow, at 30 Days 88
Table 85. 3-D ANSYS cases for Rooms 1019 & 1021, Off-Normal, No Flow, at 30 Days.....91
Table 86. Peak Trolley Tube Surface Temperatures in Room 1019, Off-Normal, No Flow, at 30 Days 91
Table 87. Peak DOE SNF Canister Temperatures in Room 1021, Off-Normal, No Flow, at 30 Days 91
Table 88. Peak DOE HLW Canister Temperatures in Room 1021, Off-Normal, No Flow, at 30 Days 92
Table 89. Peak Concrete Temperatures (°C) in Room 1019, Off-Normal, No Flow, at 30 Days 92
Table 90. Peak Concrete Temperatures (°F) in Room 1019, Off-Normal, No Flow, at 30 Days 92
Table 91. Peak Concrete Temperatures (°C) in Room 1021, Off-Normal, No Flow, at 30 Days 93
Table 92. Peak Concrete Temperatures (°F) in Room 1021, Off-Normal, No Flow, at 30 Days 93
Table 93. TAD Waste Package in Trolley Tube Peak Temperatures (°C), Off-Normal, No Flow, at 30 Days ($k_{NS\text{-}4\text{-}FR}$ = 0.646 W/m-K).....94
Table 94. TAD Waste Package in Trolley Tube Peak Temperatures (°F), Off-Normal, No Flow, at 30 Days ($k_{NS\text{-}4\text{-}FR}$ = 0.646 W/m-K).....95
Table 95. TAD Waste Package in Trolley Tube Peak Temperatures (°C), Off-Normal, No Flow, at 30 Days ($k_{NS\text{-}4\text{-}FR}$ = 6.5 W/m-K).....95
Table 96. TAD Waste Package in Trolley Tube Peak Temperatures (°F), Off-Normal, No Flow, at 30 Days ($k_{NS\text{-}4\text{-}FR}$ = 6.5 W/m-K).....95

Table 97. 5-DHLW/DOE SNF Short WP in Trolley Tube Peak Temperatures (°C), Off-Normal, No Flow, at 30 Days ($k_{NS-4-FR}$ = 0.646 W/m-K) 98

Table 98. 5-DHLW/DOE SNF Short WP in Trolley Tube Peak Temperatures (°F), Off-Normal, No Flow, at 30 Days ($k_{NS-4-FR}$ = 0.646 W/m-K) 98

Table 99. 5-DHLW/DOE SNF Short WP in Trolley Tube Peak Canister Temperatures (°C), Off-Normal, No Flow, at 30 Days ($k_{NS-4-FR}$ = 0.646 W/m-K).....98

Table 100. 5-DHLW/DOE SNF Short WP in Trolley Tube Peak Canister Temperatures (°F), Off-Normal, No Flow, at 30 Days ($k_{NS-4-FR}$ = 0.646 W/m-K) 99

Table 101. 5-DHLW/DOE SNF Short WP in Trolley Tube Peak Temperatures (°C), Off-Normal, No Flow, at 30 Days ($k_{NS-4-FR}$ = 6.5 W/m-K) 99

Table 102. 5-DHLW/DOE SNF Short WP in Trolley Tube Peak Temperatures (°F), Off-Normal, No Flow, at 30 Days ($k_{NS-4-FR}$ = 6.5 W/m-K) 99

Table 103. 5-DHLW/DOE SNF Short WP in Trolley Tube Peak Canister Temperatures (°C), Off-Normal, No Flow, at 30 Days ($k_{NS-4-FR}$ = 6.5 W/m-K).....99

Table 104. 5-DHLW/DOE SNF Short WP in Trolley Tube Peak Canister Temperatures (°F), Off-Normal, No Flow, at 30 Days ($k_{NS-4-FR}$ = 6.5 W/m-K) 100

Table 105. Average air temperatures in Room 1021 and 1022, Off-Normal 104

ACRONYMS

2-D	Two-Dimensional
3-D	Three-Dimensional
BSC	Bechtel SAIC Company, LLC
CFM	Cubic Feet Per Minute
CRCF	Canister Receipt and Closure Facility
DHLW	Defense High Level Waste
DOE	U.S. Department of Energy
HLW	High Level Waste
HVAC	Heating, Ventilation, and Air-Conditioning
ITS	Important To Safety
IV	Inner Vessel
NS-4-FR	Neutron Shielding-4, Fire Resistant
NSNFP	National Spent Nuclear Fuel Program
OCB	Outer Corrosion Barrier
SNF	Spent Nuclear Fuel
SRS	Savannah River Site
TAD	Transportation, Aging, and Disposal
WP	Waste Package

1. PURPOSE

The objective of this calculation is to evaluate the thermal performance of various waste forms in the Canister Receipt and Closure Facility 1 (CRCF-1) lower transfer room cells (as they are referred to in this calculation). Specifically, of prime interest is whether or not temperature limits of the fuel, canisters (both TAD and DOE canisters), concrete, waste package transfer trolley shielded enclosure, and waste package are exceeded, given various heat loads. The specific rooms considered in this calculation are indicated in Table 1 (References 2.2.22 and 2.2.23).

Table 1. CRCF-1 Lower Transfer Room Cells

Room Number	Room Name
1017	Canister Staging Area #1
1018	Waste Package Positioning Room (North)
1019	Waste Package Positioning Room (South)
1021	Canister Staging Area #2
1022	Canister Staging Area #3
1023	Cask Unloading Room (North)
1024	Cask Unloading Room (South)
1025	Canister Staging Area #4

The scope of the calculation is limited to normal operating conditions (normal HVAC operations) and off-normal conditions, considering both reduced air flow (ventilation provided by ITS exhaust fans only) and no air flow. Results of the calculation will be compared to the maximum allowable concrete and waste form temperatures.

2. REFERENCES

2.1 PROCEDURES/DIRECTIVES

2.1.1 EG-PRO-3DP-G04B-00037, Rev. 9. *Calculations and Analyses.* Las Vegas, Nevada: Bechtel SAIC Company. ACC: ENG.20070717.0004.

2.1.2 IT-PRO-0011, Rev. 7. *Software Management.* Las Vegas, Nevada: Bechtel SAIC Company. ACC: DOC.20070905.0007.

2.1.3 ORD (Office of Repository Development) 2007. *Repository Project Management Automation Plan.* 000-PLN-MGR0-00200-000-00E. Las Vegas, Nevada: U.S. Department of Energy, Office of Repository Development. ACC: ENG.20070326.0019.

2.2 DESIGN INPUTS

2.2.1 ACI 349-01. 2001. *Code Requirements for Nuclear Safety Related Concrete Structures (ACI 349-01).* Farmington Hills, Michigan: American Concrete Institute. TIC: 252732. (ISBN: 0-87031-041-0).

2.2.2 ANSYS V. 8.0. 2004. HP-UX 11.0, HP-UX 11.22, SunOS 5.8. STN: 10364-8.0-00. [DIRS 170070]

2.2.3 Arenaz, M.R. 2006. "Request for Updated U.S. Department of Energy (DOE) Canister Thermal Output Limits in Support of Repository Design (EM-FMDP-06-006)." Memorandum from M.R. Arenaz (DOE) to W.J. Arthur, III (DOE/ORD), February 6, 2006, 0210065322, with enclosures. ACC: MOL.20060315.0141. [DIRS 176668]

2.2.4 ASHRAE (American Society of Heating, Refrigerating & Air-Conditioning Engineers) 2001. *2001 ASHRAE Handbook, Fundamentals.* Inch-Pound Edition. Atlanta, Georgia: American Society of Heating, Refrigerating and Air-Conditioning Engineers. TIC: 249910 (ISBN: 1-883413-87-7).

2.2.5 ASME (American Society of Mechanical Engineers) 2001. *2001 ASME Boiler and Pressure Vessel Code (includes 2002 addenda).* New York, New York: American Society of Mechanical Engineers. TIC: 251425.

2.2.6 ASTM G 1-90 (Reapproved 1999). 1999. *Standard Practice for Preparing, Cleaning, and Evaluating Corrosion Test Specimens.* West Conshohocken, Pennsylvania: American Society for Testing and Materials. TIC: 238771.

2.2.7 Avallone, E.A. and Baumeister, T., III, eds. 1987. *Marks' Standard Handbook for Mechanical Engineers.* 9th Edition. New York, New York: McGraw-Hill. TIC: 206891 (ISBN: 0-07-004127-X).

2.2.8 Benedict, M.; Pigford, T.H.; and Levi, H.W. 1981. *Nuclear Chemical Engineering.* 2nd Edition. New York, New York: McGraw-Hill. TIC: 245089 (ISBN: 0-07-004531-3).

2.2.9 Bird, R.B.; Stewart, W.E.; and Lightfoot, E.N. 1960. *Transport Phenomena.* New York, New York: John Wiley & Sons. TIC: 208957 (ISBN: 0-47107392-X).

2.2.10 BSC (Bechtel SAIC Company) 2002. *FLUENT Version 6.0.12 Software Implementation Report.* Software Baseline Documentation Number: 10550-SIR-6.0.12-00. Las Vegas, Nevada: Bechtel SAIC Company. ACC: MOL.20021105.0297. [DIRS 172089]

2.2.11 BSC (Bechtel SAIC Company) 2006. *Basis of Design for the TAD Canister-Based Repository Design Concept.* 000-3DR-MGR0-00300-000-000. Las Vegas, Nevada: Bechtel SAIC Company. ACC: ENG.20061023.0002.

2.2.12 BSC (Bechtel SAIC Company) 2006. *CRCF-1 and IHF WP Transfer Trolley Mechanical Equipment Envelope Plan & Elevations-SH 1 of 2.* 000-MJ0-HL00-00101-000-00A. Las Vegas, Nevada: Bechtel SAIC Company. ACC: ENG.20061108.0002, ENG.20070517.0011, ENG.20070801.0013.

2.2.13 BSC (Bechtel SAIC Company) 2006. *Project Design Criteria Document.* 000-3DR-MGR0-00100-000-006. Las Vegas, Nevada: Bechtel SAIC Company. ACC: ENG.20061201.0005.

2.2.14 BSC (Bechtel SAIC Company) 2006. *Repository Twelve Waste Package Segment Thermal Calculation.* 800-00C-WIS0-00100-000-00B. Las Vegas, Nevada: Bechtel SAIC Company. ACC: ENG.20061116.0001, ENG.20070611.0014.

2.2.15 BSC (Bechtel SAIC Company) 2006. *Transport, Aging, and Disposal Canister System Basis of Specification Requirements Document*. 000-30R-MGR0-01400-000-001. Las Vegas, Nevada: Bechtel SAIC Company. ACC: ENG.20060626.0006.

2.2.16 BSC (Bechtel SAIC Company) 2006. *Transport, Aging, and Disposal Canister System Preliminary Performance Specifications Report.* 000-30R-MGR0-01200-000-001. Las Vegas, Nevada: Bechtel SAIC Company. ACC: ENG.20060626.0004.

2.2.17 BSC (Bechtel SAIC Company) 2006. *Technical Work Plan for: Meteorological Monitoring and Data Analysis.* TWP-MGR-MM-000001 REV 03. Las Vegas, Nevada: Bechtel SAIC Company. ACC: DOC.20060206.0003. [DIRS 176722]

2.2.18 BSC (Bechtel SAIC Company) 2007. *5-DHLW/DOE SNF - Short Co-Disposal Waste Package Sketch.* 000-MWK-DS00-00501-000-00B. Las Vegas, Nevada: Bechtel SAIC Company. ACC: ENG.20070306.0005.

2.2.19 BSC (Bechtel SAIC Company) 2007. *5-DHLW/DOE SNF - Short Co-Disposal Waste Package Sketch.* 000-MWK-DS00-00502-000-00A. Las Vegas, Nevada: Bechtel SAIC Company. ACC: ENG.20070226.0006.

2.2.20 BSC (Bechtel SAIC Company) 2007. *5-DHLW/DOE SNF - Short Co-Disposal Waste Package Sketch.* 000-MWK-DS00-00503-000-00A. Las Vegas, Nevada: Bechtel SAIC Company. ACC: ENG.20070226.0007.

2.2.21 BSC (Bechtel SAIC Company) 2007. *5-DHLW/DOE SNF - Short Co-Disposal Waste Package Sketch.* 000-MWK-DS00-00504-000-00A. Las Vegas, Nevada: Bechtel SAIC Company. ACC: ENG.20070226.0008.

2.2.22 BSC (Bechtel SAIC Company) 2007. *Canister Receipt and Closure Facility 1 General Arrangement Legend and General Notes.* 060-P10-CR00-00101-000-00A. Las Vegas, Nevada: Bechtel SAIC Company. ACC: ENG.20070517.0001.

2.2.23 BSC (Bechtel SAIC Company) 2007. *Canister Receipt and Closure Facility 1 General Arrangement Ground Floor Plan.* 060-P10-CR00-00102-000-00A. Las Vegas, Nevada: Bechtel SAIC Company. ACC: ENG.20070517.0002.

2.2.24 BSC (Bechtel SAIC Company) 2007. *Canister Receipt and Closure Facility 1 General Arrangement Second Floor Plan.* 060-P10-CR00-00103-000-00A. Las Vegas, Nevada: Bechtel SAIC Company. ACC: ENG.20070517.0003.

2.2.25 BSC (Bechtel SAIC Company) 2007. *Canister Receipt and Closure Facility 1 General Arrangement Sections A and B.* 060-P10-CR00-00106-000-00A. Las Vegas, Nevada: Bechtel SAIC Company. ACC: ENG.20070517.0006.

2.2.26 BSC (Bechtel SAIC Company) 2007. *Canister Receipt and Closure Facility 1 General Arrangement Sections C and D.* 060-P10-CR00-00107-000-00A. Las Vegas, Nevada: Bechtel SAIC Company. ACC: ENG.20070517.0007.

2.2.27 BSC (Bechtel SAIC Company) 2007. *Canister Receipt and Closure Facility 1 General Arrangement Sections E and F.* 060-P10-CR00-00108-000-00A. Las Vegas, Nevada: Bechtel SAIC Company. ACC: ENG.20070517.0008.

2.2.28 BSC (Bechtel SAIC Company) 2007. *Canister Receipt and Closure Facility #1 Preliminary Layout Ground Floor Plan.* 060-P0K-CR00-10101-000-00B. Las Vegas, Nevada: Bechtel SAIC Company. ACC: ENG.20070418.0003.

2.2.29 BSC (Bechtel SAIC Company) 2007. *CRCF 1 Heating and Cooling Load Calculation (Tertiary Non ITS).* 060-M8C-VCT0-00400-000-00C. Las Vegas, Nevada: Bechtel SAIC Company. ACC: ENG.20070816.0004.

2.2.30 BSC (Bechtel SAIC Company) 2007. *TAD Waste Package Sketch.* 000-MWK-DSC0-00101-000-00B. Las Vegas, Nevada: Bechtel SAIC Company. ACC: ENG.20070226.0033.

2.2.31 BSC (Bechtel SAIC Company) 2007. *TAD Waste Package Sketch.* 000-MWK-DSC0-00102-000-00B. Las Vegas, Nevada: Bechtel SAIC Company. ACC: ENG.20070226.0034.

2.2.32 BSC (Bechtel SAIC Company) 2007. *TAD Waste Package Sketch.* 000-MWK-DSC0-00103-000-00B. Las Vegas, Nevada: Bechtel SAIC Company. ACC: ENG.20070226.0035.

2.2.33 BSC (Bechtel SAIC Company) 2007. *Thermal Responses of TAD and 5-DHLW/DOE SNF Waste Packages to a Hypothetical Fire Accident.* 000-00C-WIS0-02900-000-00A. Las Vegas, Nevada: Bechtel SAIC Company. ACC: ENG.20070220.0008.

2.2.34 CRWMS M&O 1998. *Evaluation of WP Transporter Neutron Shielding Materials.* BCAE00000-01717-0210-00002 REV 00. Las Vegas, Nevada: CRWMS M&O. ACC: MOL.19990119.0320. [DIRS 105951]

2.2.35 DOE (U.S. Department of Energy) 1992. *Characteristics of Potential Repository Wastes.* DOE/RW-0184-R1. Volume 1. Washington, D.C.: U.S. Department of Energy, Office of Civilian Radioactive Waste Management. ACC: HQO.19920827.0001. [DIRS 102812]

2.2.36 DOE (U.S. Department of Energy) 2004. *Validation Test Report for: ANSYS V8.0.* Document Number 10364-VTR-8.0-00. Las Vegas, Nevada: U.S. Department of Energy Office of Repository Development. ACC: MOL.20040422.0376. [DIRS 171758]

2.2.37 DOE (U.S. Department of Energy) 2007. "High-Level Radioactive Waste and U.S. Department of Energy and Naval Spent Nuclear Fuel to the Civilian Radioactive Waste Management System." Volume 1 of *Integrated Interface Control Document.* DOE/RW-0511, Rev. 3. Washington, D.C.: U.S. Department of Energy, Office of Civilian Radioactive Waste Management. ACC: DOC.20070125.0002. [DIRS 178792]

2.2.38 FLUENT V. 6.0.12. 2003. HP-UX 11.00. STN: 10550-6.0.12-00. [DIRS 163001].

2.2.39 Haynes International. 1997. Hastelloy C-22 Alloy. Kokomo, Indiana: Haynes International. TIC: 238121. [DIRS 100896]

2.2.40 Incropera, F.P. and DeWitt, D.P. 1996. *Introduction to Heat Transfer.* 3rd Edition. New York, New York: John Wiley & Sons. TIC: 241057. (ISBN: 0-471-30458-1)

2.2.41 Lide, D.R., ed. 1995. *CRC Handbook of Chemistry and Physics.* 76th Edition. Boca Raton, Florida: CRC Press. TIC: 216194 (ISBN: 0-84930476-8).

2.2.42 BSC (Bechtel SAIC Company) 2007. *IED Surface Facility and Environment.* 100-IED-WHS0-00201-000-00B. Las Vegas, Nevada: Bechtel SAIC Company. ACC: ENG.20070323.0004.

2.2.43 Nuclear Engineering International. 1998. *World Nuclear Industry Handbook.* Wilmington, Kent, England: Wilmington Business Publishing. TIC: 237121. (ISBN: 0-952979845).

2.2.44 Thompson, T.C. 2003. "NAC-STC Safety Analysis Report, Revision 14." Letter from T.C. Thompson (NAC International) to the NRC, June 18, 2003, with enclosures. TIC: 255255. [DIRS 169362].

2.2.45 SN0612GEOCOORD.001. Geographic Coordinates and Elevation for Yucca Mountain Meteorological Sites 1, 2, 3, 6, 8, and 9. Submittal date: 12/11/2006 [DIRS 178549]

2.3 DESIGN CONSTRAINTS

None.

2.4 DESIGN OUTPUTS

2.4.1 This calculation will be used as input to the next revision of the *HLW/DOE SNF Co-disposal Waste Package Design Report*.

2.4.2 This calculation will be used as input to the *TAD Waste Package Design Report* (000-00C-DSC0-00100-000-00A).

3. ASSUMPTIONS

3.1 ASSUMPTIONS REQUIRING VERIFICATION

3.1.1 CRCF-1 Room Dimensions, Names, and Numbers

The CRCF-1 room dimensions, names, and numbers modeled are assumed to be the same as those indicated in References 2.2.22, 2.2.23, 2.2.24, 2.2.25, 2.2.26, and 2.2.27, and are assumed to be the same as the final definitive design.

Rationale: The design is preliminary, and will require verification at the completion of the final definitive design.

This assumption is used in Section 6.

3.1.2 Active Fuel Length of TAD Canister

The active fuel length of the TAD canister is assumed to be 3.66 m.

Rationale: This is based on the active length of a WE 17 x 17 fuel assembly, given in Reference 2.2.43, p. 64. Currently, there is no TAD canister design available, but the WE 17 x 17 fuel assembly is likely representative of the fuel assemblies to be stored in a TAD canister.

This assumption is used in Sections 6.1, 6.4.1, and 6.4.2.

3.1.3 Thermal Output of DOE HLW Canisters

It is assumed that the maximum thermal output of a DOE HLW canister is 1500 W.

Rationale: Pages 1 and 2 of Reference 2.2.3 indicate that a maximum heat load of 1500 W per DOE HLW canister is appropriate, and is acceptable to each of the DOE HLW sites. This value is expected to flow down in upper tier requirements as documents are revised.

This assumption is used in Section 6.4.

3.1.4 Dimensions and Materials of the 5-DHLW/DOE SNF Short Waste Package

Dimensions and materials of the 5-DHLW/DOE SNF Short Waste Package are assumed to be the same as those indicated in References 2.2.18, 2.2.19, 2.2.20, and 2.2.21 and are assumed to be the same as the final definitive design.

Rationale: The design is preliminary, and will require verification at the completion of the final definitive design.

This assumption is used in Sections 6.2 and 6.3.

3.1.5 Dimensions and Materials of the TAD Waste Package

Dimensions and materials of the TAD Waste Package are assumed to be the same as those indicated in References 2.2.30, 2.2.31, and 2.2.32 and are assumed to be the same as the final definitive design.

Rationale: The design is preliminary, and will require verification at the completion of the final definitive design.

This assumption is used in Sections 6.2 and 6.3.

3.1.6 Shielding Dimensions and Materials of the Waste Package Transfer Trolley Shielded Enclosure

It is assumed that the Waste Package Transfer Trolley shielded enclosure (hereafter, referred to as the trolley tube) is composed of an 11.5-in layer of A 516 CS surrounded by a 7.5-in layer of NS-4-FR, and has the emissivity of A 516 CS.

Rationale: Currently, the design of the trolley tube shielding is unavailable. The information in Attachment II provides preliminary shielding material thicknesses of the trolley tube and is the best information currently available. Attachment II indicates that it is likely that the design will incorporate 7.5 in of borated poly and 11.5 in of steel. Therefore the use of NS-4-FR and A 516 CS are reasonable. It is likely that the trolley tube will have a thin steel outer layer; hence, using the emissivity of A 516 CS is reasonable.

This assumption is used in Section 6.3.

3.1.7 Effective Thermal Conductivity of the TAD Canister

An effective thermal conductivity of 4.29 W/m-K is assumed for the TAD canister.

Rationale: Currently, there is no TAD canister design available to determine effective thermal conductivity. Therefore, the TAD canister is represented as a homogeneous material with an effective thermal conductivity, calculated in Section 6.2.7 of Reference 2.2.33. The highest effective thermal conductivity calculated in Reference 2.2.33 (4.29 W/m-K) is used as a constant value in this calculation. The thermal conductivity of the TAD canister from Reference 2.2.33 was calculated using the requirements in Section 3.7.1 of Reference 2.2.15, and, therefore, is acceptable.

This assumption is used in Sections 6, 6.2, 6.3, and 6.4.1.

3.1.8 Emissivity of the TAD Canister

An emissivity of 0.62 is assumed for the TAD canister.

Rationale: Currently, there is no TAD canister design available to determine emissivity. Section 3.5.1 of Reference 2.2.15 indicates that the TAD canister will be, “constructed of AISI 300-

series stainless steels (e.g., 316 L)." Table 4.3.2 of Reference 2.2.7 gives a median value of 0.62 for 316 Stainless Steel.

This assumption is used in Sections 6 and 6.3.

3.1.9 Effective Specific Heat of the TAD Canister

The effective specific heat of the TAD canister is assumed to be the same as for a 21-PWR Waste Package.

Rationale: Currently, there is no TAD canister design available to determine effective thermal properties. The 21-PWR Waste Package was designed for similar thermal performance of the same waste form. Hence, thermal properties of the TAD Waste Package and the 21-PWR Waste Package are expected to be similar.

This assumption is used in Sections 6, 6.2, 6.3, and 6.4.1.

3.1.10 Effective Density of the TAD Canister

The effective density of the TAD canister is assumed to be the same as for a TAD Waste Package.

Rationale: Currently, there is no TAD canister design available to determine effective thermal properties. Since the TAD canister accounts for the majority of the mass of a loaded TAD Waste Package, using the density of the TAD Waste Package in place of the TAD canister is reasonable.

This assumption is used in Sections 6, 6.2, 6.3, and 6.4.1.

3.1.11 Effective Density of the 3-D Waste Package in the Trolley Tube

The effective density of the homogeneous cylinder representing the Waste Package in the trolley tube is assumed to be the same as that of the TAD Waste Package.

Rationale: Currently, the design of the trolley tube is not finalized. The density of the TAD Waste Package is chosen for convenience. Since the internal temperatures of the homogeneous cylinder representing the Waste Package in the trolley tube are not of interest in the three-dimensional calculations, this is acceptable.

This assumption is used in Sections 6, 6.3, and 6.4.1.

3.1.12 Effective Thermal Conductivity of the 3-D Waste Package in the Trolley Tube

An effective thermal conductivity of 1.5 W/m-K is assumed for homogeneous cylinder representing the waste package in the trolley tube.

Rationale: Currently, the design of the trolley tube is not finalized. The effective thermal conductivity for a 21-PWR Waste Package homogeneous cylinder (which excludes the outer corrosion barrier) is calculated in Reference 2.2.14. The effective radial thermal conductivity is 1.479 W/m-K (Reference 2.2.14, Attachment IV, CD 2 of 2, file: \ *THERMAL_PROPERTIES* \ *21PWR_internal_radial_k-eff.mcd*). The peak effective axial thermal conductivity is 1.453 W/m-K (Reference 2.2.14, Attachment IV, CD 2 of 2, file: \ *THERMAL_PROPERTIES* \ *21PWR_internal_axial_k-eff.mcd*). For simplicity, a constant isotropic value of 1.5 W/m-K is used for the homogeneous cylinder representing the waste package in the trolley tube. Since the internal temperatures of the homogeneous cylinder representing the waste package in the trolley tube are not of interest in the three-dimensional calculations, this is acceptable.

This assumption is used in Sections 6, 6.3, and 6.4.1.

3.1.13 Effective Specific Heat of the 3-D Waste Package in the Trolley Tube

The effective specific heat of the homogeneous cylinder representing the waste package in the trolley tube is assumed to be the same as for a 21-PWR Waste Package, and is taken from Table 28 of Reference 2.2.14.

Rationale: Currently, the design of the trolley tube is not finalized, and there is no TAD canister design available to determine effective thermal properties. The specific heat of the 21-PWR Waste Package is chosen for convenience. Since the internal temperatures of the homogeneous cylinder representing the waste package in the trolley tube are not of interest in the three-dimensional calculations, this is acceptable.

This assumption is used in Sections 6, 6.3, and 6.4.1.

3.1.14 Thermal Properties of Borosilicate Glass

The thermal properties, except thermal conductivity, of borosilicate glass are assumed to be the same as those of Pyrex glass.

Rationale: The thermal material properties, except thermal conductivity, of borosilicate glass are not found in a source that may be referenced. Therefore, the properties of Pyrex glass will be used from Reference 2.2.40, Table A.3. Pyrex and borosilicate glass are similar and the differences in their thermal properties are anticipated to be negligible.

This Assumption is used in Section 6.3.

3.1.15 Effective Thermal Properties of the Shield Doors

The density and specific heat of the shield door between Rooms 1019 and 1015, as well as the shield door between Rooms 1023 and 1026, are assumed to be the same as those for concrete. The emissivity of both shield doors is assumed to be the same as that of 316 SS. The thermal conductivity of both shield doors is assumed to be the same as that of NS-4-FR.

Rationale: While the designs of the shield doors are not finalized, they will likely be composed of steel. Using the thermal properties described above will yield higher (conservative) temperatures. In addition, the thermal performance of the shield doors is not of interest in this calculation; therefore, using the thermal properties as stated above is reasonable.

This Assumption is used in Section 6.3.

3.1.16 Dimensions of the Shield Doors

The shield door between Rooms 1019 and 1015, as well as the shield door between Rooms 1023 and 1026, are assumed to be 28 ft high, 20 ft wide, and 1 ft thick.

Rationale: The designs of the shield doors are not finalized. The interior height of the rooms is 28 ft (see Reference 2.2.25), and Reference 2.2.12 indicates that the trolley has a 20-ft wide clearance envelope, so the doorway cannot be higher than 28 ft, and cannot be narrower than 20 ft. The thickness of 1 ft is chosen for convenience. However, the thermal performance of the shield doors is not of interest in this calculation; therefore, using the dimensions stated above is reasonable.

This Assumption is used in Section 6.1.

3.1.17 CRCF-1 Air Flow Rates and Temperatures

The air flow rates and temperatures indicated in Attachment III are assumed to be the same as the final definitive design.

Rationale: This is the best information currently available. The design is preliminary, and will require verification at the completion of the final definitive design. For added conservatism, the small amount of air cascaded from Rooms 2004 and 2007 for the normal operating condition is ignored.

This Assumption is used in Section 6.1.

3.1.18 Dimensions of the Supply and Return Air Openings

The dimensions of the supply (inlet) and return (outlet) air openings are assumed to be 2 ft x 4 ft in Rooms 1021 and 1022, and are assumed to be 5 ft x 5 ft in Rooms 1019 and 1023.

Rationale: The HVAC design of the CRCF-1 is not finalized, and the sizes of the openings are not known at this time. Attachment III provides volumetric air flow rates, which, for the purposes of this calculation, is sufficient to determine maximum concrete and waste form temperatures. Varying the sizes of the openings will change the air velocities at the openings, and will also change the location of hot spots, but the magnitude of the maximum temperatures is not expected to vary much.

This Assumption is used in Section 6.1.

3.1.19 Locations of the Supply and Return Air Openings

The locations of the supply (inlet) and return (outlet) air openings are assumed as indicated in Figure 2 and Figure 3.

Rationale: The HVAC design of the CRCF-1 is not finalized, and the locations of the openings are not known at this time. For the purposes of this calculation, the locations used are sufficient to determine maximum concrete and waste form temperatures. Varying the locations of the openings will change the air flow patterns in the rooms, and will also change the location of hot spots, but the magnitude of the maximum temperatures is not expected to vary much.

This Assumption is used in Section 6.1.

3.1.20 Steel Plate in Staging Rooms

It is assumed that the steel plate lining the staging rooms is made of A 516 Carbon Steel.

Rationale: Reference 2.2.23 indicates that Rooms 1017, 1021, 1022, and 1025 have walls that are lined with 3 in thick steel plate, but the type of steel is not specified. The type of steel used is not expected to have a significant effect on maximum temperatures of the concrete and waste forms. A 516 Carbon Steel is chosen for convenience.

This Assumption is used in Section 6.3.

3.1.21 Thickness of Concrete Walls and Ceilings

The concrete walls and ceilings of the rooms in the CRCF-1 are assumed to have a thickness of 4 ft.

Rationale: Note 1 of Reference 2.2.28 indicates that the concrete walls of the rooms considered in this calculation are 4 ft thick. For convenience, the 4-ft thickness is applied to the ceilings as well. The design is preliminary, and will require verification at the completion of the final definitive design.

This Assumption is used in Section 6.1.

3.1.22 Locations of Waste Forms in the Rooms

The locations of the waste forms in the rooms are assumed.

Rationale: Locations of the waste forms are not represented in References 2.2.22 through 2.2.27. The locations of the waste forms in the rooms were chosen to be thermally conservative. The design is preliminary, and will require verification at the completion of the final definitive design.

This Assumption is used in Section 6.

3.1.23 Thickness of Concrete Floors

The concrete floors of the rooms of interest in this calculation are assumed to have a thickness of 6 ft.

Rationale: According to References 2.2.25, 2.2.26, and 2.2.27 (using the scale on the drawings), the concrete floors of the rooms of interest are 6 ft thick. The design is preliminary, and will require verification at the completion of the final definitive design.

This Assumption is used in Section 6.1.

3.1.24 Temperature Boundary Conditions

The temperatures of the rooms surrounding those represented in the computational models, as indicated in Reference 2.2.29, are assumed to be the same as the final definitive design.

Rationale: Reference 2.2.29 is the best information currently available. Although Reference 2.2.29 is a QA: N/A calculation, it is suitable for use in this calculation, because boundary conditions are established for a non-ITS portion of the system (Reference 2.2.29, Section 4.1).

This Assumption is used in Sections 6.1, 6.5.1, and 6.5.2.1.

3.2 ASSUMPTIONS NOT REQUIRING VERIFICATION

3.2.1 Natural Convection

Natural convection (i.e., effect of gravity) is ignored in the FLUENT representation.

Rationale: Natural convection has a minor effect during forced-flow conditions. The locations of hot spots on the cell walls may vary, but the magnitude of the temperature is not expected to differ significantly.

This assumption is used in Section 6.

3.2.2 Waste Package and Canister Support Structures

Waste package and canister support structures are ignored in this calculation, and the waste forms in the 3-D models are assumed to be “floating” in air.

Rationale: This assumption is needed to simplify the 3-D FLUENT and ANSYS representations to a more reasonable level of detail. The conduction of heat through support structures is expected to be small, and ignoring them is thermally conservative for the waste forms.

This assumption is used in Section 6.

3.2.3 Representation of Trolley Tube

In the 3-D models, the waste package and the trolley tube are represented together as a single, solid, homogeneous, heat-generating cylinder.

Rationale: This is a simplifying assumption necessary to keep the computational model to a reasonable size. Representing the trolley tube as round reduces the surface area participating in heat transfer, which will result in higher (conservative) temperatures. Representing the cylinder as solid, neglects any convective heat transfer between the waste package and the trolley tube, which also results in higher (conservative) temperatures. Since the internal temperatures of the homogeneous cylinder representing the Waste Package in the trolley tube are not of interest in the three-dimensional calculations, this is acceptable.

This assumption is used in Sections 4.3, 6, 6.3, 6.4.1.

3.2.4 Representation of DOE Canisters in the 3-D FLUENT and ANSYS Models

In the 3-D computational models (FLUENT and ANSYS), the DOE SNF and DOE HLW canisters are represented as solid, homogeneous, heat-generating cylinders, with smeared thermal properties of borosilicate glass, and with surface emissivities of the steel shells.

Rationale: This assumption is made for convenience in creating the computational model, and will have negligible effect on the temperature field. Representing both the canister internals and the shells as solid glass (with its low thermal conductivity) is conservative and is thermally bounding.

This assumption is used in Sections 6, 6.3, and 6.4.1.

3.2.5 Emplacement Pallet is Neglected

Conductive heat transfer between the waste package and the emplacement pallet is neglected.

Rationale: Simplifying assumptions are needed in order to represent the geometry to a reasonable amount of detail. The waste package supports have point contact with the waste package in only a few places. Therefore, conduction through the support structure will be limited and can be conservatively neglected.

This assumption is used in Sections 6 and 6.2.

3.2.6 Representation of HLW Canister

The Savannah River Site (SRS) short HLW glass canister is assumed for the glass canister design.

Rationale: Section 11.2.2.7 of Reference 2.2.11 indicates that the SRS short HLW canister is an expected waste form for the 5-DHLW/DOE SNF Short Waste Package. The SRS short HLW canister is the hottest glass canister and there is no criterion for minimum aging time of the

HLW. Both the short and long HLW canisters have the same maximum heat. Therefore, the short canisters have higher energy density, thus higher surface temperatures. Therefore, modeling the short HLW canisters is conservative.

This assumption is used in Sections 6 and 6.2.

3.2.7 Representation of DOE SNF Canister

It is assumed that the DOE SNF canister (placed in the center of the 5-DHLW/DOE SNF Short Waste Package) is filled with glass to 85% of the canister volume (similar to the SRS HLW canister).

Rationale: This assumption is made for convenience in creating the computational model, and will have negligible effect on the temperature field. Section 11.2.2.8 of Reference 2.2.11 indicates that a small (18 in. x 10 ft.) National Spent Nuclear Fuel Program (NSNFP) canister is an expected waste form for the center of the 5-DHLW/DOE SNF Short Waste Package. Figure C-4 of Reference 2.2.37 (Note 15) lists several different fuel types that could be contained within the canister. Using glass, with its low thermal conductivity, and occupying only 85% of the canister volume, in place of the fuel, is conservative and is thermally bounding to the other fuel types.

This assumption is used in Sections 6, 6.2, 6.4.2, and 7.1.

3.2.8 Heat Transfer Modeling Within the Waste Package

Modeling of only conduction and radiation heat transfer inside the waste package is assumed to provide conservative results for this calculation.

Rationale: Some convective heat transfer will occur in the waste package fill gas. However, convection within the waste package represents a very small part of the overall heat transfer. Neglecting this mode of heat transfer will result in slightly higher temperatures within the waste package and, therefore, is conservative.

This assumption is used in Section 6.

3.2.9 Two-Dimensional Representation of Waste Package

In the two-dimensional models of the waste package in the trolley tube, it is assumed that there is no contact between the various components (i.e., between the waste package and the trolley tube, between the outer corrosion barrier and inner vessel, between the inner vessel and canisters, between the inner vessel and basket structure, etc.) and gaps between components are evenly distributed.

Rationale: By modeling the waste package with no contact between the various components, heat conduction out of the waste package is minimized, which results in higher (i.e., conservative) fuel temperatures.

This assumption is used in Sections 6 and 6.2.

3.2.10 Pressure of Helium in the Waste Package

The thermal conductivity of helium at atmospheric pressure is assumed to be representative of the conditions which helium in the waste package will experience.

Rationale: According to p. 255 of Reference 2.2.9, the thermal conductivity of most gasses is pressure independent. Thus, using the thermal conductivity at atmospheric pressure is reasonable. The impact of this assumption is anticipated to be negligible.

This assumption is used in Section 6.3.

3.2.11 Waste Form Representation in Rooms 1023 and 1024

A waste package in a trolley tube is represented in place of a cask in Rooms 1023 and 1024.

Rationale: References 2.2.22, 2.2.23, and 2.2.24 indicate that Rooms 1023 and 1024 each contain a transportation or aging cask. Some of these casks are not yet designed, but all will have to be certified by the NRC and demonstrate that they satisfy the applicable temperature limits for their waste forms. It is expected that the surface temperatures of these casks will be about the same as surface temperature of the homogenous cylinder representing the waste package in the trolley tube.

The thermal effects on the concrete are not dependent on the internal cask details; therefore, representing a waste package in a trolley tube in these rooms provides an adequate heat source to evaluate the thermal performance of the concrete walls. Modeling the waste package in the trolley tube in these rooms provides conservative boundary conditions for the 2-D analyses in this calculation, and thus provides conservative canister and cladding temperatures.

This assumption is used in Section 6.

3.2.12 Equipment in All Rooms Is Neglected

With the exception of the waste forms, the rooms are assumed to be devoid of all equipment.

Rationale: This is a simplifying assumption necessary to keep the computational model to a reasonable size. Any equipment in the rooms will provide additional heat conduction paths from the waste forms or concrete walls, and will also provide greater surface area for convection and radiation heat transfer to the environment. Therefore, modeling only the waste forms in the rooms is conservative.

This assumption is used in Section 6.

3.2.13 Slide Gates Are Ignored

The slide gates in the ceilings of the rooms are ignored, and the concrete ceilings are assumed to have uniform composition and thickness throughout.

Rationale: This is a simplifying assumption necessary to keep the computational model to a reasonable size. The thermal performance of the slide gates is not of interest in this calculation. Representing the ceilings as uniform concrete slabs reduces the ceiling surface area participating in convective and radiative heat transfer, which results in higher (conservative) temperatures.

This assumption is used in Section 6.

3.2.14 Thickness of Concrete Floors in FLUENT models

The concrete floors in the FLUENT representations are modeled with a thickness of 4 m.

Rationale: According to References 2.2.25, 2.2.26, and 2.2.27 (using the scale on the drawings), the concrete floors of the rooms of interest are 6 ft thick. A pre-existing model that incorporates a 4m-thick floor was used as a basis for the FLUENT analyses. Since adiabatic boundary conditions are applied on the exterior surfaces of the concrete floors, the extra thickness modeled will have a negligible impact on the results in this calculation.

This Assumption is used in Section 6.1.

3.2.15 Modeling the Internal Basket Structure of the 5-DHLW/DOE SNF Short Waste Package

Due to difficulties modeling the internal basket structure, dimensions may not be exactly as stated in Reference 2.2.21.

Rationale: The internal basket structure of the 5-DHLW/DOE SNF Short Waste Package has some complex geometric features that are difficult to model exactly in ANSYS. Therefore, there may be a difference on the order of ± 0.001 m in the modeled dimensions. This is an extremely small variation and will have no measurable impact on results.

This assumption is used in Section 6.2.

3.2.16 Configuration of the Trolley Tube

It is assumed that the trolley tube has a circular cross-section, has 6 in of clearance to the waste package, has 2 ft of clearance to the ceiling of the rooms, and has an outer diameter of 130.5 in and a height of 21.5 ft.

Rationale: Representing the trolley tube as round reduces the surface area participating in heat transfer, which will result in higher (conservative) temperatures.

The outer diameter of 130.5 in is determined by taking twice the sum of 6-in (clearance), 11.5-in (A 516 CS), and 7.5-in (NS-4-FR), and adding that to the outer diameter of the outer corrosion barrier of the largest-diameter waste package (5-DHLW/DOE SNF-Short Waste Package), which is 80.5 in (Reference 2.2.19).

The height of 21.5 ft is determined by taking the interior height of the rooms (28 ft, see Reference 2.2.25), subtracting the height of the trolley base (4.5 ft, see Reference 2.2.12), and subtracting the top gap of 2 ft. Although Reference 2.2.12 shows that the trolley tube is higher, using the shorter length of 21.5 ft will result in higher temperatures, and, therefore, is conservative.

This assumption is used in Sections 6, 6.1, 6.2, and 6.4.1.

4. METHODOLOGY

4.1 QUALITY ASSURANCE

This calculation was prepared in accordance with EG-PRO-3DP-G04B-00037, *Calculations and Analyses* (Reference 2.1.1). The waste packages are classified as Safety Category items (important to safety and important to waste isolation) in the *Basis of Design for the TAD Canister-Based Repository Design Concept* (Reference 2.2.11, Section 11.1.2). The structure of the CRCF-1 is classified as a Safety Category item (important to safety) in the *Basis of Design for the TAD Canister-Based Repository Design Concept* (Reference 2.2.11, Section 4.1.2). Therefore, the approved version of this document designated as QA: QA.

4.2 USE OF SOFTWARE

The finite volume computer code used for the calculation is FLUENT Version 6.0.12 (Reference 2.2.38), which is identified by the Software Tracking Number 10550-6.0.12-00. Usage of FLUENT Version 6.0.12 in this calculation constitutes Level 1 software usage, as defined in IT-PRO-0011 (Reference 2.1.2, Attachment 12). FLUENT Version 6.0.12 is qualified, baselined, and listed in the *Repository Project Management Automation Plan* (Reference 2.1.3, Table 6-1).

Calculations using the FLUENT Version 6.0.12 software were executed on the following Hewlett-Packard (HP) 9000 Series workstations running operating system HP-UX 11.00:

Central Processing Unit (CPU) Name: Portnoy, Civilian Radioactive Waste Management System Management and Operating Contractor (CRWMS M&O) Tag Number: 150691

CPU Name: Opus, CRWMS M&O Tag Number: 151664

The FLUENT Version 6.0.12 evaluations performed in this calculation are fully within the range of the validation performed for FLUENT Version 6.0.12 (Reference 2.2.10). Therefore, FLUENT Version 6.0.12 is appropriate for the fluid/thermal analysis as performed in this calculation. Access to, and use of, the code for this calculation was granted by Software Configuration Management in accordance with the appropriate procedures. The details of the FLUENT analyses are described in Section 6 and the results are presented in Section 7 of this calculation.

The finite element computer code used for this calculation is ANSYS V8.0 (Reference 2.2.2), which is identified by the Software Tracking number 10364-8.0-00. Usage of ANSYS V8.0 in this calculation constitutes Level 1 software usage, as defined in IT-PRO-0011 (Reference 2.1.2, Attachment 12). ANSYS V8.0 is qualified, baselined, and listed in the *Repository Project Management Automation Plan* (Reference 2.1.3, Table 6-1).

Calculations using the ANSYS V8.0 software were executed on the following Hewlett-Packard (HP) 9000 Series workstations running operating system HP-UX 11.00:

CPU Name: Milo, CRWMS M&O Tag Number: 151665

CPU Name: Opus, CRWMS M&O Tag Number: 151664

CPU Name: Rosebud, CRWMS M&O Tag Number: 150689

CPU Name: Oliver, CRWMS M&O Tag Number: 150688

CPU Name: Portnoy, CRWMS M&O Tag Number: 150691

The ANSYS V8.0 evaluations performed in this calculation are fully within the range of the validation performed for ANSYS V8.0 (Reference 2.2.36). Therefore, ANSYS V8.0 is appropriate for the thermal analysis as performed in this calculation. Access to, and use of, the code for this calculation was granted by Software Configuration Management in accordance with the appropriate procedures. The details of the ANSYS analyses are described in Section 6 and the results are presented in Section 7 of this calculation.

ICEM CFD 5.0 is used for creating the computational meshes used in the FLUENT representations. Usage of ICEM CFD 5.0 in this calculation constitutes Level 2 software usage, as defined in IT-PRO-0011 (Reference 2.1.2, Attachment 12). ICEM CFD 5.0 is listed in the *Repository Project Management Automation Plan* (Reference 2.1.3, Table 6-1).

ICEM CFD 5.0 was executed on the following Hewlett-Packard (HP) 9000 Series workstation running operating system HP-UX 11.00:

CPU Name: Milo, CRWMS M&O Tag Number: 151665

The meshes are verified by visual inspection.

Microsoft Excel 2000 (9.0.6926 SP-3), which is a component of Microsoft Office 2000, is used for performing simple calculations and plotting results in Section 7. Usage of Microsoft Office in this calculation constitutes Level 2 software usage, as defined in IT-PRO-0011 (Reference 2.1.2, Attachment 12). Microsoft Office 2000 is listed in the *Repository Project Management Automation Plan* (Reference 2.1.3, Table 6-1).

Microsoft Excel 2000 SP-3 was executed on a PC running the Microsoft Windows 2000 SP-4 operating system. The calculations are confirmed by hand calculations, and the plots are confirmed by visual inspection.

Mathcad version 13.0 is used for the calculation of thermal properties in Attachment V. Usage of Mathcad version 13.0 in this calculation constitutes Level 2 software usage, as defined in IT-PRO-0011 (Reference 2.1.2, Attachment 12). Mathcad version 13.0 is listed in the *Repository Project Management Automation Plan* (Reference 2.1.3, Table 6-1).

Mathcad version 13.0 was executed on a PC running the Microsoft Windows 2000 SP-4 operating system. The results are confirmed by hand calculation.

All inputs and outputs are located in Attachment V.

4.3 METHOD

The solution method employed involves a combination of two-dimensional (2-D) and three-dimensional (3-D) analyses using the commercially available codes, ANSYS and FLUENT, to determine the temperatures in the waste packages and canisters, as well as concrete temperatures in associated rooms of CRCF-1, for several cases with varying waste package type, heat loads, and boundary conditions. Scenarios with air flow rates representing normal operating conditions (normal HVAC operations) and off-normal conditions, considering both reduced air flow (ventilation provided by ITS exhaust fans only) and no air flow, are examined.

For ventilation cases representing the normal operating condition (normal HVAC operations) and the off-normal condition (ventilation provided by ITS exhaust fans only), steady-state, computational fluid dynamics (CFD), numerical solutions are performed using FLUENT. Three-dimensional representations of the lower transfer room cells, with heat sources representing various waste forms, are used to determine the flow fields in the rooms and the temperatures of the concrete walls and waste forms. The commercially available code ICEM CFD Version 5.0 is used to generate the meshes input into FLUENT.

For ventilation cases representing the off-normal condition with no air flow, 30-day transient, finite element, numerical solutions are performed using ANSYS. Three-dimensional representations of the lower transfer room cells, with heat sources representing various waste forms, are used to determine the temperatures of the concrete walls and waste forms.

In all cases, in the 3-D models, the waste package and the trolley tube are represented together as a single, homogeneous, heat-generating cylinder (Assumption 3.2.3). In order to determine the temperatures of the waste package and canister(s) contained therein, finite element numerical solutions are performed in ANSYS, using two-dimensional representations of the waste package inside the trolley tube and using the peak surface temperature of the trolley tube from the 3-D solutions as a boundary condition.

5. LIST OF ATTACHMENTS

Table 2. List of Attachments

Attachment	Description	Number of Pages
I	Average Air Temperatures From Fluent Off-Normal Cases	1
II	E-Mail Regarding Trolley Tube Shielding Thicknesses	2
III	E-Mail Regarding CRCF Air Flow Rates	5
IV	File Listing for Attachment V	25
V	Two (2) Digital Video Discs (DVDs)	N/A
VI	Concrete Temperature Histories, Off-Normal Condition, No Flow	7

6. BODY OF CALCULATION

For this calculation, the thermal performance of the waste package, canisters, and concrete walls in the CRCF-1 are evaluated by modeling the most thermally bounding rooms. The room dimensions, names, and numbers are indicated in References 2.2.22, 2.2.23, 2.2.24, 2.2.25, 2.2.26, and 2.2.27 (Assumption 3.1.1).

Table 3 indicates which waste forms are contained in which rooms (see References 2.2.22, 2.2.23, and 2.2.24). Even though Rooms 1023 and 1024 each contain a Shipping or Aging Cask, the thermal performance of these casks is not of interest in this calculation. Therefore, a waste package in a trolley tube is represented in place of a cask (Assumption 3.2.11). The locations of the waste forms in the rooms are assumed (Assumption 3.1.22).

Table 3. Waste Form Configuration Within CRCF-1

Room Number	Waste Form
1017	One TAD Canister
1018	One Waste Package in Trolley Tube (approximately located underneath the transfer port)
1019	One Waste Package in Trolley Tube (approximately located underneath the transfer port)
1021	Six DOE Canisters
1022	One TAD Canister
1023	One Waste Package in Trolley Tube in place of Shipping/Aging Cask
1024	One Waste Package in Trolley Tube in place of Shipping/Aging Cask
1025	Four DOE Canisters

Referring to the eight rooms listed in Table 3, Reference 2.2.23 indicates that they are arranged such that there is a plane of symmetry between Rooms 1018 and 1019 and between Rooms 1023 and 1024 (Figure 1 illustrates the positions of the rooms considered in this calculation, relative to each other). Taking advantage of this symmetry, the eight rooms are grouped together in four groups: Rooms 1017 and 1018, Rooms 1019 and 1021, Rooms 1022 and 1023, and Rooms 1024 and 1025.

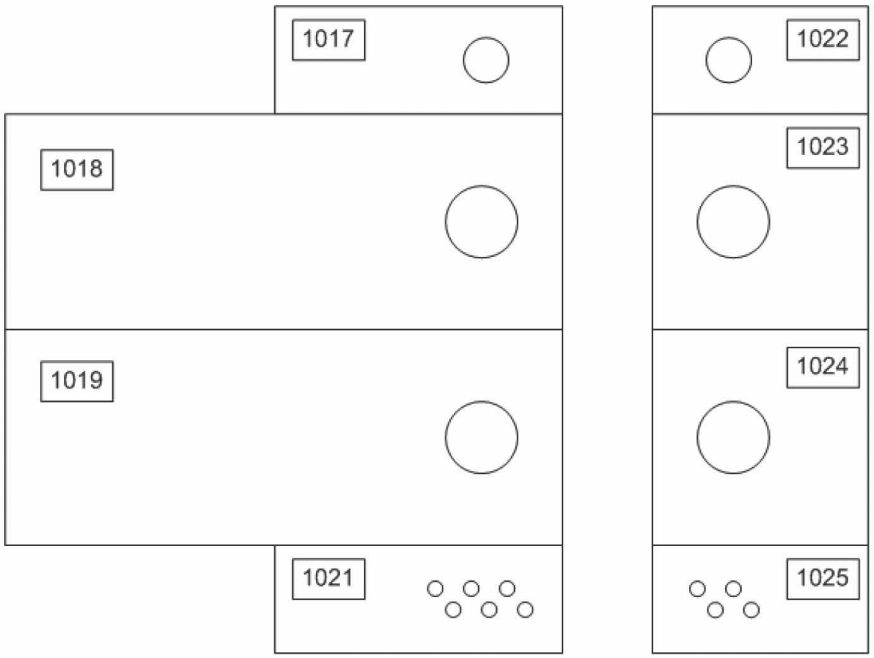

Figure 1. Room Locations in the CRCF-1 Relative to Each Other (not to scale)

Considering that Rooms 1017 and 1022 each contain one TAD canister, and considering the interior surface areas of the two rooms, it is determined that, given similar boundary conditions and heat loads, Room 1022 will have a higher heat flux on the concrete, and, hence, higher temperatures (see Attachment V, DVD 1 of 2, file: *compare_room_heat_loads.xmcd* for calculation).

Likewise, Considering that Room 1021 contains 6 DOE Canisters (with a total heat load of 9.47 kW) and Room 1025 contains 4 DOE Canisters (with a total heat load of 6.47 kW), and considering the interior surface areas of the two rooms, it is determined that, given similar boundary conditions, Room 1021 will have a higher heat flux on the concrete, and, hence, higher temperatures (see Attachment V, DVD 1 of 2, file: *compare_room_heat_loads.xmcd* for calculation).

Rooms 1018 and 1019 have similar geometries, boundary conditions, and heat loads, as do Rooms 1023 and 1024.

For these reasons, Rooms 1017, 1018, 1024, and 1025 are not modeled in this calculation. This reduces the number of room configurations required for this calculation to two; Rooms 1022 and 1023 are modeled together, and Rooms 1019 and 1021 are modeled together.

There are three scenarios considered in this calculation: a normal operating condition (normal HVAC operations), an off-normal condition with reduced air flow (ventilation provided by ITS exhaust fans only), and an off-normal condition with no air flow.

For the normal operating conditions and the off-normal conditions with reduced air flow, FLUENT is used to perform a CFD analysis of 3-D representations of Rooms 1022 and 1023 and Rooms 1019 and 1021 containing the associated waste forms. The FLUENT analyses determine the flow fields within the rooms, as well as the temperatures of the concrete walls and waste forms.

For the off-normal condition with no air flow, ANSYS is used to perform a finite element thermal analysis of 3-D representations of Rooms 1022 and 1023 and Rooms 1019 and 1021 containing the associated waste forms. The ANSYS analyses determine the temperatures of the concrete walls and waste forms.

All waste forms in the 3-D computational models (FLUENT and ANSYS) are represented as solid, homogeneous, heat-generating cylinders, with smeared thermal properties (Assumptions 3.1.7, 3.1.8, 3.1.9, 3.1.10, 3.1.11, 3.1.12, 3.1.13, 3.2.3 and 3.2.4). The waste forms are represented as floating within the rooms (Assumption 3.2.2). Any equipment that may be in the rooms is ignored (Assumption 3.2.12). Also, the slide gates in the ceilings of the rooms are ignored (Assumption 3.2.13).

In order to determine the temperatures of the waste package located inside the trolley tube, ANSYS is used to solve 2-D representations of a waste package in the trolley tube using the surface temperatures obtained from the FLUENT and ANSYS representations.

In the 2-D ANSYS computational models, the waste inside the canisters is represented as solid, homogeneous, heat-generating materials, with smeared thermal properties (Assumptions 3.1.7, 3.1.8, 3.1.9, 3.1.10, 3.2.6, and 3.2.7). The trolley tube is represented with a circular cross-section (Assumption 3.2.16). The waste package is represented as floating within the trolley tube, and the canisters are represented as floating within the waste package (Assumption 3.2.9). The emplacement pallet is ignored (Assumption 3.2.5).

In the FLUENT analyses, the heat transfer modes include forced convection, radiation, and conduction. Natural convection due to buoyancy is ignored in this calculation (Assumption 3.2.1). In the ANSYS analyses, the heat transfer modes include radiation and conduction only (see Assumption 3.2.8).

The following sections describe the details of both the FLUENT and ANSYS representation development, boundary conditions, and parameters used in the calculation.

6.1 3-D FLUENT AND ANSYS MODELS

Configuration and dimensions of the rooms are taken from References 2.2.23, 2.2.25, 2.2.26, and 2.2.27. Dimensions used in the 3-D FLUENT and ANSYS representations are listed in Table 4 and Table 5. Figure 2 and Figure 3 show the 3-D models used in FLUENT. Figure 4 and Figure 5 show the 3-D models used in ANSYS.

Table 4. Building Dimensions Used in the 3-D FLUENT and ANSYS Representations

Component	Dimension	Reference
Concrete Wall Thickness	4 ft	Assumption 3.1.21
Concrete Floor Thickness (ANSYS)	6 ft	Assumption 3.1.23
Concrete Floor Thickness (FLUENT)	4 m	Assumption 3.2.14
Interior Room Height (All Rooms)	28 ft	Assumption 3.1.21 and References, 2.2.25, 2.2.26, and 2.2.27
Room 1022 Interior Width *	11 ft	Reference 2.2.23
Room 1022 Interior Length *	28 ft	Reference 2.2.23
Room 1023 Interior Width	28 ft	Reference 2.2.23
Room 1023 Interior Length	28 ft	Reference 2.2.23
Room 1019 Interior Width	28 ft	Reference 2.2.23
Room 1019 Interior Length	80 ft	Reference 2.2.23
Room 1021 Interior Width *	11 ft	Reference 2.2.23
Room 1021 Interior Length *	40 ft	Reference 2.2.23
Shield Door Height	28 ft	Assumption 3.1.16
Shield Door Width	20 ft	Assumption 3.1.16
Shield Door Thickness	1 ft	Assumption 3.1.16

* Dimension listed is concrete-to-concrete (does not include steel plates)

Table 5. Waste Form Dimensions Used in the 3-D FLUENT and ANSYS Representations

Component	Dimension	Reference
TAD Canister Outer Diameter	66.5 in	Reference 2.2.16, Section 3.1.1
TAD Canister Length	212 in	Reference 2.2.16, Section 3.1.1
TAD Canister Active Length	3.66 m	Assumption 3.1.2
Trolley Tube Outer Diameter	130.5 in	Assumption 3.2.16
Trolley Tube Height	21.5 ft	Assumption 3.2.16
DOE SNF Canister Outer Diameter	18 in	Reference 2.2.37, Figure C-4
DOE SNF Canister Length	2.8 m	Reference 2.2.37, Figure C-4 (total canister length minus top and bottom skirts)
DOE SNF Canister Active Length	2.31 m	Attachment V, DVD 1 of 2, file: *DOE_SNF_active_length.xmcd*
DOE HLW Canister Outer Diameter	24 in	Reference 2.2.11, Section 11.2.2.7
DOE HLW Canister Length	3 m	Reference 2.2.11, Section 11.2.2.7
DOE HLW Canister Active Length	2.29 m	Attachment V, DVD 1 of 2, file: *HLW_active_length.xmcd*

Air flow data for the normal operating condition are shown in Table 6 (Assumption 3.1.17). Air flow data for the off-normal condition with reduced air flow are shown in Table 7 (Assumption 3.1.17).

Normal air temperatures are taken from Reference 2.2.29 (Assumption 3.1.24). In Room 1019, Attachment III indicates that most of the air is transferred from Room 1015 (Assumption 3.1.17), and p. 67 of Reference 2.2.29 gives the summer design temperature of Room 1015 as 79 °F (Assumption 3.1.24). In Room 1023, Attachment III indicates that most of the air is transferred from Room 1026 (Assumption 3.1.17), and p. 78 of Reference 2.2.29 gives the summer design temperature of Room 1026 as 79 °F (Assumption 3.1.24). Attachment III indicates that the inlet temperature of Rooms 1021 and 1022 is 51 °F (Assumption 3.1.17).

Air temperatures for the off-normal condition (ITS exhaust) are set equal to the maximum ambient outdoor temperature of 116 °F (46.7 °C) (Reference 2.2.13, Section 6.1.6).

Dimensions and locations of the supply (inlet) and return (outlet) air openings are assumed (Assumptions 3.1.18 and 3.1.19). The details of the velocity calculations can be seen in Attachment V, DVD 1 of 2, file: *CRCF_flow_rates.xmcd*.

Table 6. Normal HVAC Air Flows

Location	Air Flow Rate (CFM)	Air Temperature (°F)	Opening Size *l* (ft) x w (ft)	Velocity
Room 1019 Inlet	5000	79	5 x 5	3.33 ft/s (1.02 m/s)
Room 1021 Inlet	500	51	2 x 4	1.04 ft/s (0.32 m/s)
Room 1022 Inlet	2000	51	2 x 4	4.17 ft/s (1.27 m/s)
Room 1023 Inlet	3500	79	5 x 5	2.33 ft/s (0.71 m/s)

Table 7. Off-Normal (ITS Exhaust) Air Flows

Location	Air Flow Rate (CFM)	Design Temperature (°F)	Opening *w* (in.) x *h* (in.)	Velocity
Room 1019 Inlet	1000	116	5 x 5	0.67 ft/s (0.20 m/s)
Room 1021 Inlet	0	116	2 x 4	0
Room 1022 Inlet	0	116	2 x 4	0
Room 1023 Inlet	1000	116	5 x 5	0.67 ft/s (0.20 m/s)

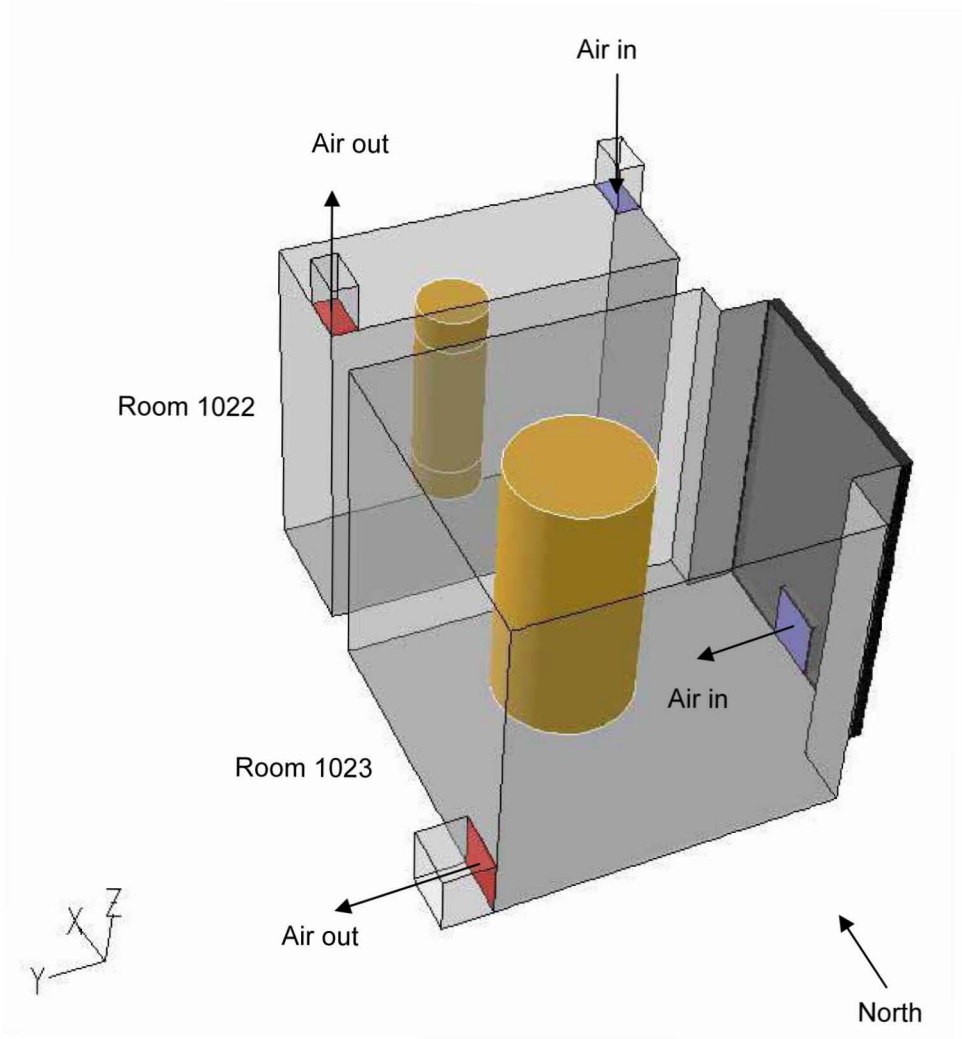

Figure 2. 3-D FLUENT Representation of Rooms 1022 and 1023

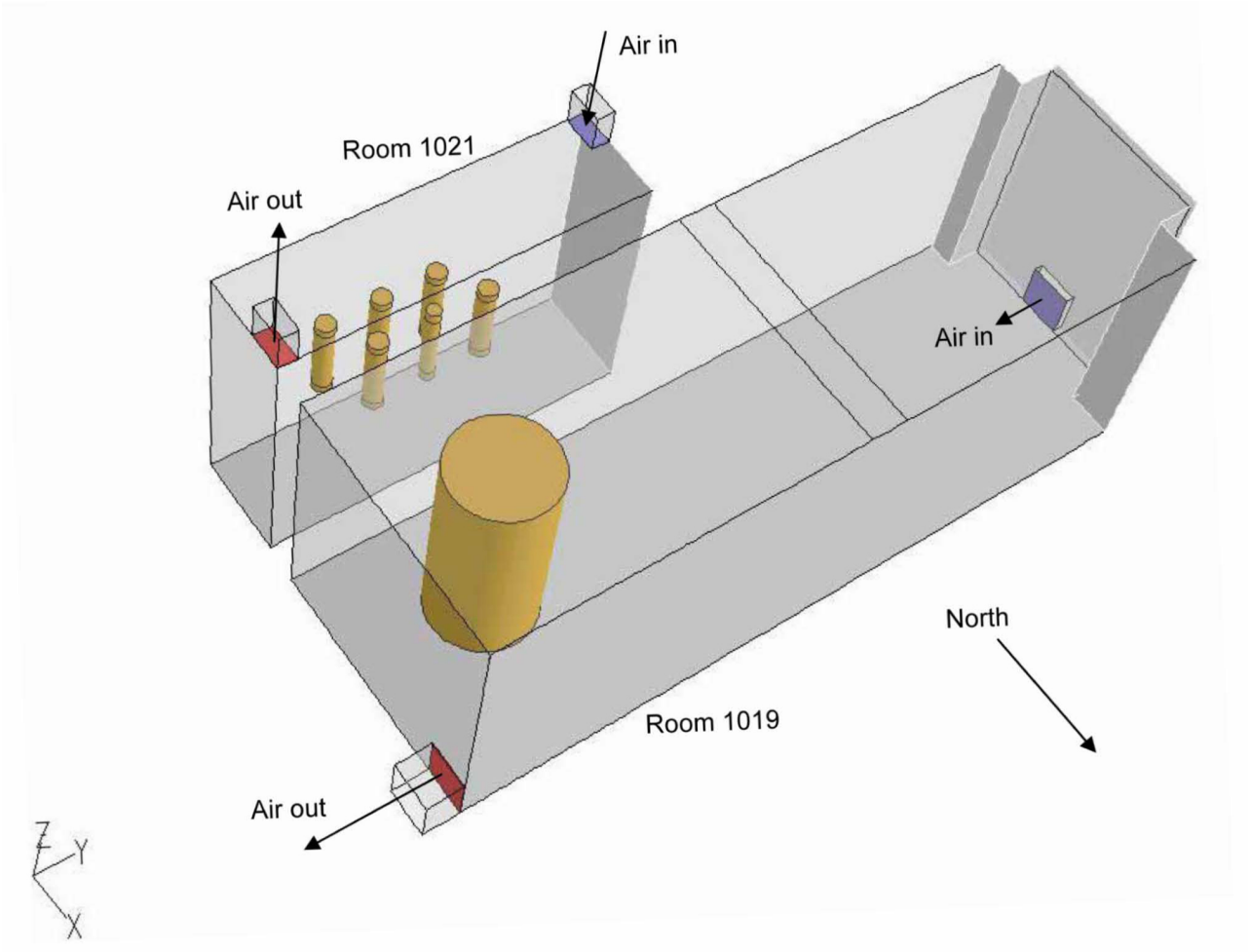

Figure 3. 3-D FLUENT Representation of Rooms 1019 and 1021

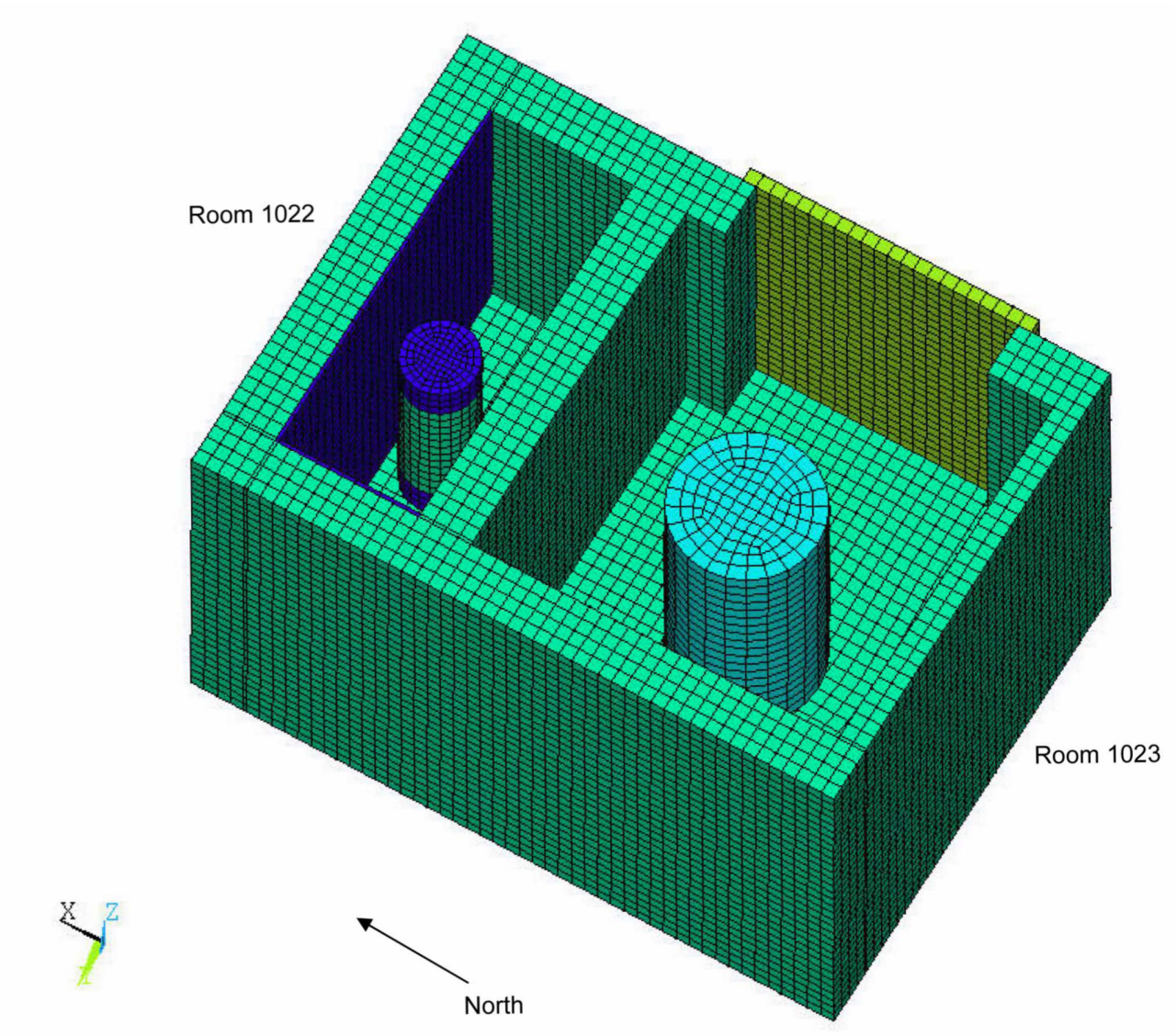

Figure 4. 3-D ANSYS Representation of Rooms 1022 and 1023

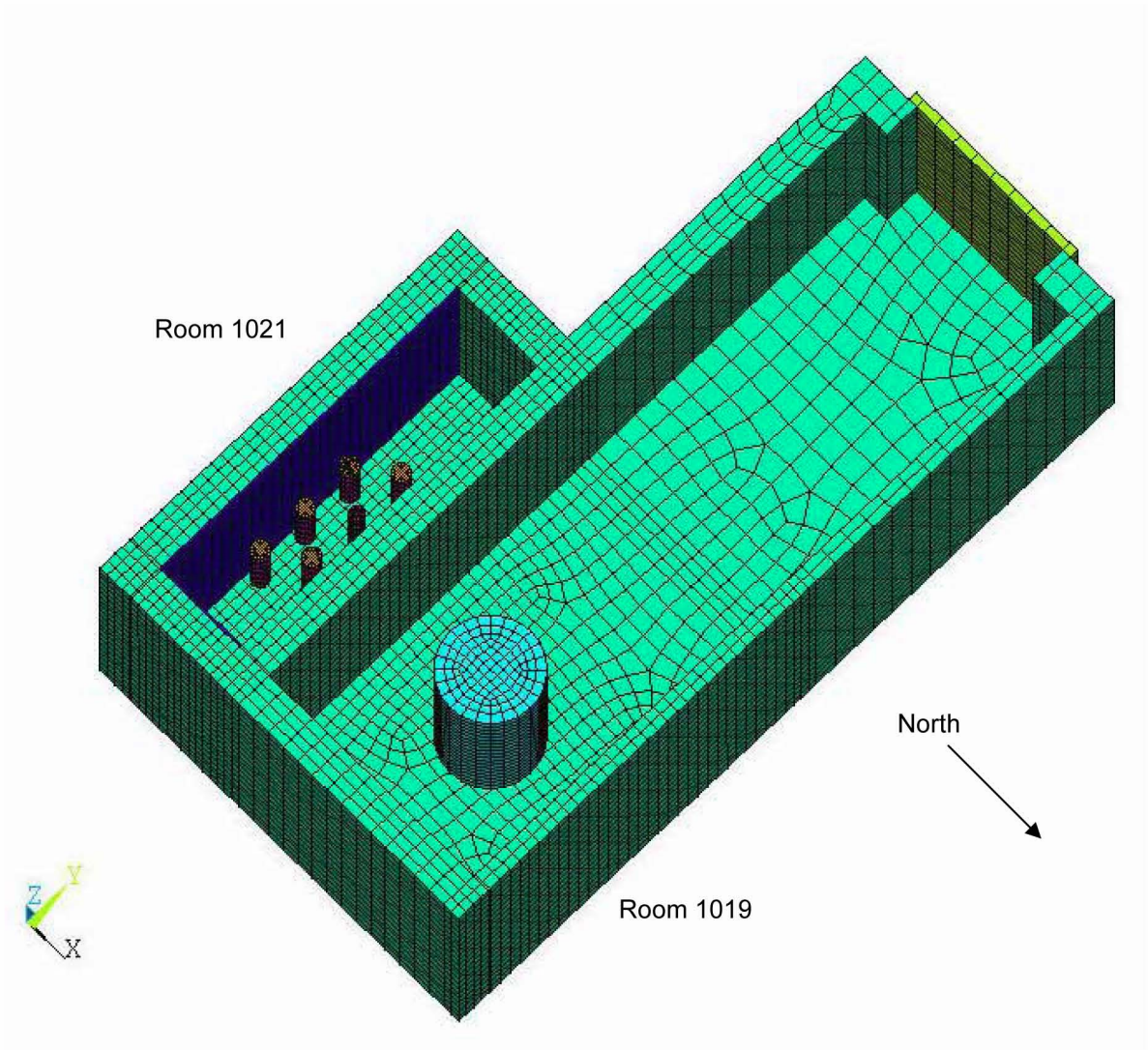

Figure 5. 3-D ANSYS Representation of Rooms 1019 and 1021

6.2 2-D ANSYS MODELS OF WASTE PACKAGE IN TROLLEY TUBE

All dimensions given in inches were converted to meters in ANSYS using a conversion factor of 39.370 in/m.

Table 8 lists the dimensions of the trolley tube used in the 2-D ANSYS representations. Only the trolley tube shielding is represented in the computational models, and the tube is assumed to have a circular cross-section (Assumption 3.2.16).

Table 8. Trolley Tube Dimensions

Item	Dimension (in)
Outer Neutron Shielding Layer Thickness	7.5
Inner Steel Layer Thickness	11.5
Clearance Gap Between Waste Package and Trolley Tube	6
Trolley Tube Outer Diameter	130.5

Dimensions of the 5-DHLW/DOE SNF Short Waste Package, taken from References 2.2.19, 2.2.20, and 2.2.21, are summarized in Table 9 (see Assumption 3.1.4 and Assumption 3.2.15).

Table 9. 5-DHLW/DOE SNF Short Waste Package Dimensions

Component	Dimension (in)
Waste Package Length (minus lid lifting feature)	144.32
Outer Corrosion Barrier Outer Diameter	80.50
Outer Corrosion Barrier Inner Diameter	78.50
Inner Vessel Outer Diameter	78.13
Inner Vessel Inner Diameter	74.13
Guide Tube Outer Diameter	22.24
Guide Tube Inner Diameter	19.74
Outer Divider Plate Thickness	0.5
Inner Divider Plate Thickness	1.0

Dimensions of the TAD Waste Package, taken from References 2.2.31 and 2.2.32, are summarized in Table 10 (see Assumption 3.1.5).

Table 10. TAD Waste Package Dimensions

Component	Dimension (in)
Waste Package Length (minus lid-lifting feature)	229.07
Outer Corrosion Barrier Outer Diameter	74.08
Outer Corrosion Barrier Inner Diameter	72.08
Inner Vessel Outer Diameter	71.70
Inner Vessel Inner Diameter	67.70

Five SRS HLW canisters (Assumption 3.2.6) and one DOE SNF canister (Assumption 3.2.7) are represented as "floating" in the 5-DHLW/DOE SNF Short Waste Package basket structure, such that there is no contact between the canisters and the waste package/basket. Further, each canister is positioned in the middle of the basket cell with gaps evenly distributed around the canister (Assumption 3.2.9).

Table 11 lists the relevant canister dimensions used in the ANSYS representations of the 5-DHLW/DOE SNF Short Waste Package. The outer diameter of the SRS HLW canister is taken from Section 11.2.2.7 of Reference 2.2.11. The thickness of the SRS HLW canister shell is taken from Figure 3.3.1 of Reference 2.2.35, because it is not available in either *Basis of Design for the TAD Canister-Based Repository Design Concept* (Reference 2.2.11) or *Integrated Interface Control Document* (Reference 2.2.37). The dimensions of the DOE SNF canister are taken from Reference 2.2.37, Figure C-4.

Table 11. HLW and DOE SNF Canister Dimensions

Component	Dimension (in)
SRS HLW Canister Outer Diameter	24.0
SRS HLW Canister Shell Thickness	0.375
DOE SNF Canister Outer Diameter	18.0
DOE SNF Canister Shell Thickness	0.375

The TAD canister is represented as a homogeneous material (Assumptions 3.1.7, 3.1.9, and 3.1.10), and is represented as "floating" in the TAD Waste Package, such that there is no contact between the canister and the waste package inner vessel (Assumption 3.2.9).

The TAD canister dimensions used in the 2-D ANSYS representations are listed in Table 5.

The emplacement pallet is not represented in the trolley tube (Assumption 3.2.5).

Figure 6 and Figure 7 show the 2-D finite element meshes used in ANSYS.

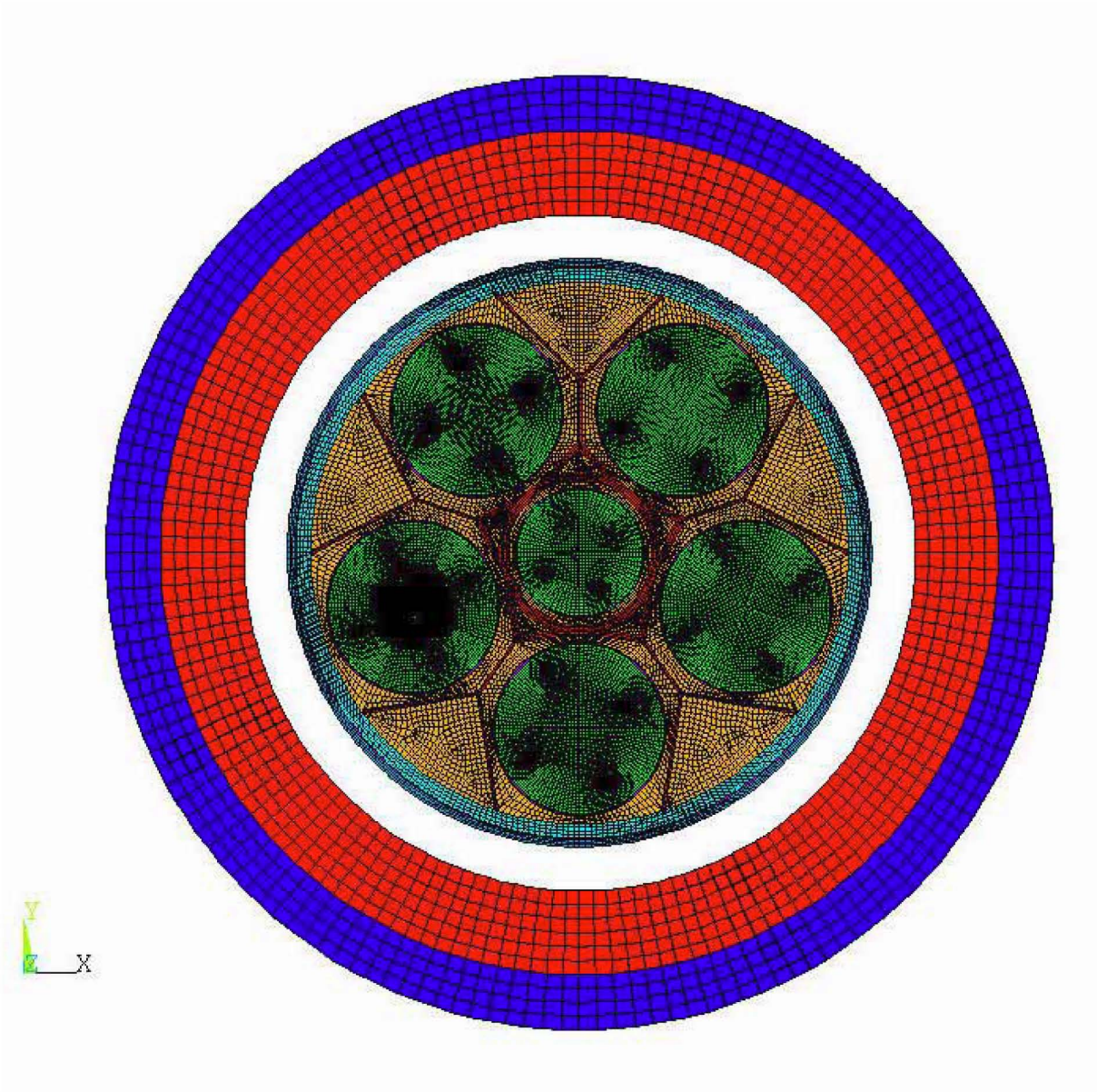

Figure 6. 2-D ANSYS Representation of 5-DHLW/DOE SNF Short Waste Package in the Trolley Tube

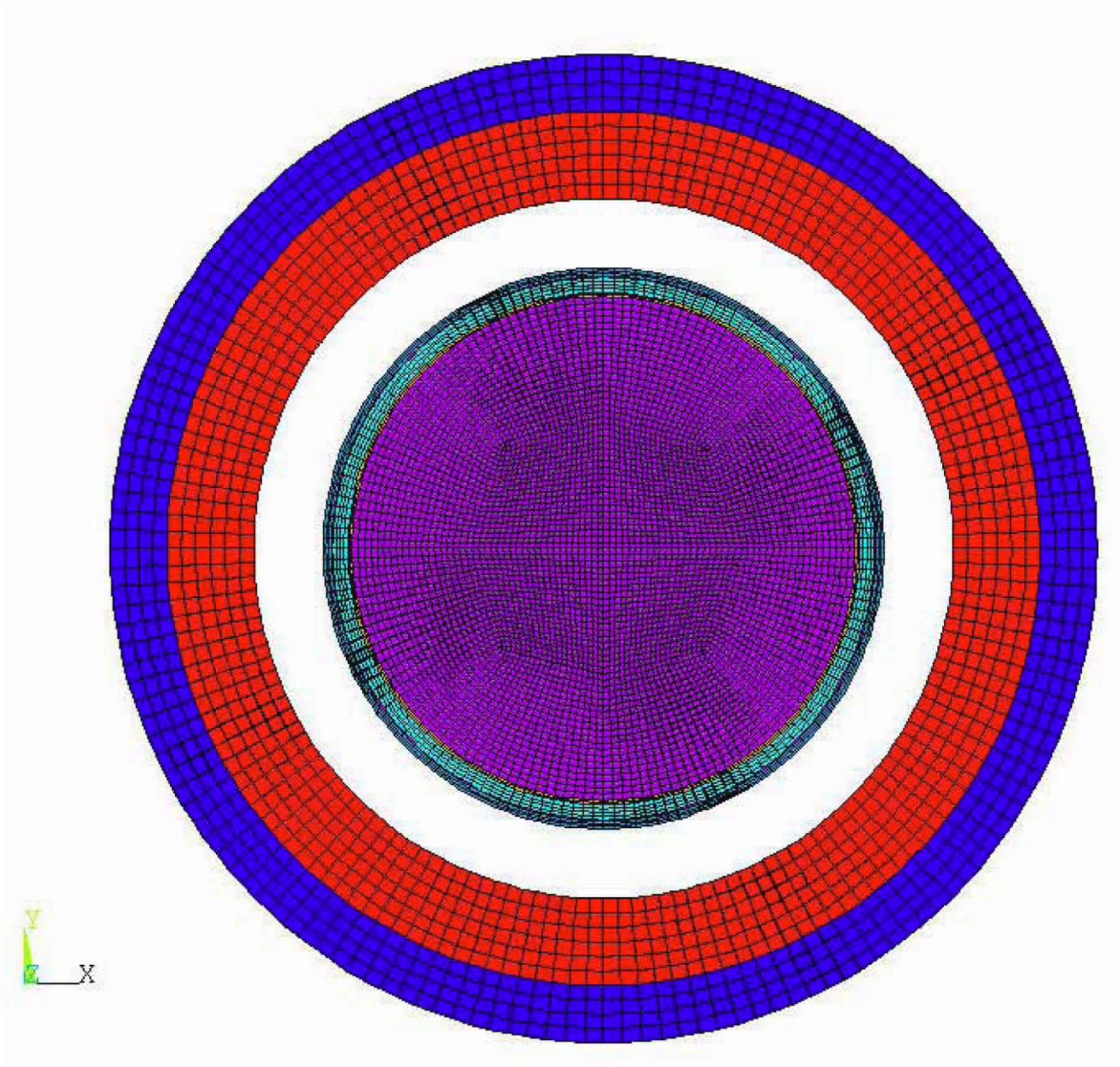

Figure 7. 2-D ANSYS Representation of TAD Waste Package in the Trolley Tube

6.3 THERMAL PROPERTIES

Table 12 summarizes the materials used in the 3-D representations.

Table 12. Materials Used in the 3-D Representations

Component	Material	Reference
Walls	Concrete	References 2.2.22, 2.2.23, 2.2.25, 2.2.26, and 2.2.27
Staging Room Wall Shielding	A 516 Carbon Steel	Assumption 3.1.20
Waste Package in Trolley Tube	Homogeneous Material	Assumption 3.2.3
Trolley Tube Surface	A 516 Carbon Steel	Assumption 3.1.6
TAD Canister	Homogeneous Material	Assumptions 3.1.7, 3.1.9, and 3.1.10
TAD Canister Surface	316 L Stainless Steel	Assumption 3.1.8
DOE SNF Canister	Borosilicate Glass	Assumption 3.2.4
DOE SNF Canister Surface	316L Stainless Steel	Assumption 3.2.4, Reference 2.2.37, Figure C-4
DOE HLW Canister	Borosilicate Glass	Assumption 3.2.4
DOE HLW Canister Surface	304L Stainless Steel	Assumption 3.2.4, Reference 2.2.11, Section 11.2.2.7
Shield Door	Homogeneous Material	Assumption 3.1.15
Shield Door Surface	316 Stainless Steel	Assumption 3.1.15

Table 13 lists the materials used in the ANSYS representations of the 5-DHLW / DOE SNF Waste Package (see Assumption 3.1.4).

Table 13. Materials Used in the Representations of the 5-DHLW / DOE SNF Short Waste Package

Component	Material	Reference
Outer Corrosion Barrier	Alloy 22	Reference 2.2.18
Inner Vessel	316 Stainless Steel	Reference 2.2.18
Basket	516 Carbon Steel	Reference 2.2.18
DOE HLW Canister Shell	304L Stainless Steel	Reference 2.2.11, Section 11.2.2.7
DOE SNF Canister Shell	316L Stainless Steel	Reference 2.2.37, Figure C-4
Glass	Borosilicate Glass	Reference 2.2.11, Section 4.2.1.3
Waste Package Inner Vessel Fill Gas	Helium	Reference 2.2.13, Section 4.9.5.4.2
Gap Between Inner Vessel and Outer Corrosion Barrier	Air	No fill gas is specified. Since this area is allowed to communicate with the environment, it is air.

Table 14 lists the materials used in the ANSYS representations of the TAD Waste Package (see Assumption 3.1.5).

Table 14. Materials Used in the Representations of the TAD Waste Package

Component	Material	Reference
Outer Corrosion Barrier	Alloy 22	Reference 2.2.30
Inner Vessel	316 Stainless Steel	Reference 2.2.30
TAD Canister	Homogeneous Material	Assumptions 3.1.7, 3.1.9, and 3.1.10
Waste Package Inner Vessel Fill Gas	Helium	Reference 2.2.13, Section 4.9.5.4.2
Gap Between Inner Vessel and Outer Corrosion Barrier	Air	No fill gas is specified. Since this area is allowed to communicate with the environment, it is air.

Table 15 lists the materials used in the ANSYS representations of the trolley tube (see Assumption 3.1.6).

Table 15. Materials Used in the Representations of the Trolley Tube

Component	Material
Outer Layer	NS-4-FR
Inner Layer	A 516 Carbon Steel

In the 3-D models, the waste package and the trolley tube are represented together as a single, homogeneous, heat-generating cylinder (Assumption 3.2.3). Assumed thermal properties for the homogeneous three-dimensional waste packages are given in Table 16.

The effective density of the homogeneous cylinder representing the waste package in the trolley tube is assumed to be the same at that of the TAD Waste Package (Assumption 3.1.11).

The effective density of the TAD Waste Package is determined by dividing the loaded mass of the TAD Waste Package (given as 73,500 kg in Reference 2.2.30) by the volume of the TAD Waste Package, which is calculated using the equation for the volume of a cylinder:

$$V = \pi \left(\frac{D}{2} \right)^2 L \tag{1}$$

where D is the outer diameter of the outer corrosion barrier and L is the waste package length, minus lid-lifting feature. See Attachment V, DVD 1 of 2, file: *TAD_WP_density.xmcd* for calculation.

An effective thermal conductivity of 1.5 W/m-K is assumed for the homogeneous cylinder representing the waste package in the trolley tube (Assumption 3.1.12).

The effective specific heat of the homogeneous cylinder representing the waste package in the trolley tube is assumed to be the same as for a 21-PWR Waste Package, and is taken from Table 28 of Reference 2.2.14 (Assumption 3.1.13).

The emissivity of the homogeneous cylinder representing the waste package in the trolley tube is assumed to be the same as A 516 CS (see Assumption 3.1.6 and Table 23).

Table 16. Effective Thermal Properties of 3-D Waste Package in the Trolley Tube

Density (kg/m^3)	Thermal Conductivity (W/m-K)	Specific Heat (J/kg·K)	Emissivity
4624	1.5	438	0.8

Currently, there is no TAD canister design available to determine its thermal properties. Assumed thermal properties for the TAD canister are given in Table 17.

The effective density of a TAD canister is assumed to be the same as that of a TAD Waste Package (Assumption 3.1.10).

An effective thermal conductivity of 4.29 W/m-K is assumed for the TAD canister, which is calculated in Section 6.2.7 of Reference 2.2.33 (Assumption 3.1.7).

The effective specific heat of a TAD canister is assumed to be the same as for a 21-PWR Waste Package, and is taken from Table 28 of Reference 2.2.14 (Assumption 3.1.9).

An emissivity of 0.62 is assumed for the TAD canister (Assumption 3.1.8).

Table 17. Effective Thermal Properties of TAD Canister

Density (kg/m^3)	Thermal Conductivity (W/m-K)	Specific Heat (J/kg·K)	Emissivity
4624	4.29	438	0.62

Table 18 lists the density and emissivity of Alloy 22. The density is taken from Reference 2.2.5, Section II, Part B, SB-575, Section 7.1. The emissivity is taken from Reference 2.2.41, p. 10-297. Table 19 lists the thermal conductivity of Alloy 22. Table 20 lists the specific heat of Alloy 22. The values of thermal conductivity and specific heat are taken from Reference 2.2.39, p. 13. The information cited in Reference 2.2.39 is data from the vendor of Alloy 22, and, therefore, is suitable for use in this calculation.

Table 18. Density and Emissivity of Alloy 22

Density (kg/m^3)	Emissivity
8690	0.87

Table 19. Thermal Conductivity of Alloy 22

Temperature (°C)	Thermal Conductivity (W/m·K)
48	10.1
100	11.1
200	13.4
300	15.5
400	17.5
500	19.5
600	21.3

Table 20. Specific Heat of Alloy 22

Temperature (°C)	Specific Heat (J/kg·K)
52	414
100	423
200	444
300	460
400	476
500	485
600	514

Table 21 lists the density and emissivity of 316 SS and 316L SS. The density is taken from Reference 2.2.6, Table X1.1. The emissivity is taken from Reference 2.2.7, Table 4.3.2 (median value).

Table 22 lists values of thermal conductivity, thermal diffusivity, and specific heat of 316 SS and 316L SS. Values for thermal conductivity and thermal diffusivity are taken from Reference 2.2.5, Section II, Part D, Table TCD, p. 663 (material group K). The derivation of specific heat is defined in Equation (2). The specific heat of 316 SS and 316L SS is calculated using Equation (2), using the density in Table 21.

$$Specific\ Heat\left(\frac{\mathrm{J}}{\mathrm{kg}\cdot\mathrm{K}}\right) = \frac{Thermal\ Conductivity\left(\frac{\mathrm{W}}{\mathrm{m}\cdot\mathrm{K}}\right)}{Density\left(\frac{\mathrm{kg}}{\mathrm{m}^3}\right)\cdot Thermal\ Diffusivity\left(\frac{\mathrm{m}^2}{\mathrm{s}}\right)} \tag{2}$$

Table 21. Density and Emissivity of 316 SS and 316L SS

Density (kg/m^3)	Emissivity
7980	0.62

Table 22. Thermal Conductivity, Thermal Diffusivity, and Specific Heat of 316 SS and 316L SS

Temperature		Thermal Conductivity		Thermal Diffusivity		Specific Heat (J/kg·K)
(°F)	(°C)	(Btu/hr-ft-F)	(W/m-K)	(ft^2/hr)	(m^2/s)	
70	21.11	8.2	14.18	0.139	3.587E-06	495.4
100	37.78	8.3	14.35	0.140	3.613E-06	497.9
150	65.56	8.6	14.87	0.142	3.665E-06	508.6
200	93.33	8.8	15.22	0.145	3.742E-06	509.7
250	121.11	9.1	15.74	0.147	3.794E-06	519.9
300	148.89	9.3	16.08	0.150	3.871E-06	520.7
350	176.67	9.5	16.43	0.152	3.923E-06	524.9
400	204.44	9.8	16.95	0.155	4.000E-06	531.0
450	232.22	10.0	17.30	0.157	4.052E-06	534.9
500	260.00	10.2	17.64	0.160	4.129E-06	535.4
550	287.78	10.5	18.16	0.162	4.181E-06	544.3
600	315.56	10.7	18.51	0.165	4.258E-06	544.6
650	343.33	10.9	18.85	0.167	4.310E-06	548.2
700	371.11	11.2	19.37	0.170	4.387E-06	553.3
750	398.89	11.4	19.72	0.172	4.439E-06	556.6
800	426.67	11.6	20.06	0.175	4.516E-06	556.7
850	454.44	11.9	20.58	0.177	4.568E-06	564.6
900	482.22	12.1	20.93	0.179	4.619E-06	567.7
950	510.00	12.3	21.27	0.182	4.697E-06	567.6
1000	537.78	12.5	21.62	0.184	4.748E-06	570.5
1050	565.56	12.8	22.14	0.187	4.826E-06	574.9
1100	593.33	13.0	22.48	0.189	4.877E-06	577.7
1150	621.11	13.2	22.83	0.191	4.929E-06	580.4

Table 23 lists the density and emissivity of 516 CS. The density is taken from Reference 2.2.5, Section II, Part A, SA-20, 14.1. The emissivity is taken from Reference 2.2.7, Table 4.3.2 (median value for smooth oxidized iron).

Table 24 lists values of thermal conductivity, thermal diffusivity, and specific heat of 516 CS. Values for thermal conductivity and thermal diffusivity are taken from Reference 2.2.5, Section II, Part D, Table TCD (p.662, Material Group B). The specific heat of 516 CS is calculated using Equation (2), using the density in Table 23.

Table 23. Density and Emissivity of 516 CS

Density (kg/m^3)	Emissivity
7850	0.80

Table 24. Thermal Conductivity, Thermal Diffusivity, and Specific Heat of 516 CS

Temperature		Thermal Conductivity		Thermal Diffusivity		Specific Heat (J/kg·K)
(°F)	(°C)	(Btu/hr-ft-F)	(W/m-K)	(ft^2/hr)	(m^2/s)	
70	21.11	27.5	47.56	0.529	1.365E-05	443.8
100	37.78	27.6	47.73	0.512	1.321E-05	460.2
150	65.56	27.6	47.73	0.496	1.280E-05	475.1
200	93.33	27.6	47.73	0.486	1.254E-05	484.8
250	121.11	27.4	47.39	0.467	1.205E-05	500.9
300	148.89	27.2	47.04	0.453	1.169E-05	512.6
350	176.67	27.0	46.70	0.440	1.135E-05	523.9
400	204.44	26.7	46.18	0.428	1.105E-05	532.6
450	232.22	26.3	45.49	0.413	1.066E-05	543.7
500	260.00	25.9	44.79	0.398	1.027E-05	555.6
550	287.78	25.5	44.10	0.387	9.987E-06	562.5
600	315.56	25.0	43.24	0.374	9.652E-06	570.7
650	343.33	24.5	42.37	0.360	9.290E-06	581.0
700	371.11	24.0	41.51	0.346	8.929E-06	592.2
750	398.89	23.5	40.64	0.332	8.568E-06	604.3
800	426.67	23.0	39.78	0.318	8.206E-06	617.5
850	454.44	22.6	39.09	0.305	7.871E-06	632.6
900	482.22	22.1	38.22	0.291	7.510E-06	648.4
950	510.00	21.5	37.18	0.277	7.148E-06	662.6
1000	537.78	21.0	36.32	0.263	6.787E-06	681.7
1050	565.56	20.5	35.45	0.249	6.426E-06	702.9
1100	593.33	19.9	34.42	0.237	6.116E-06	716.8
1150	621.11	19.3	33.38	0.219	5.652E-06	752.4
1200	648.89	18.7	32.34	0.202	5.213E-06	790.3
1250	676.67	18.0	31.13	0.184	4.748E-06	835.2
1300	704.44	17.1	29.57	0.159	4.103E-06	918.2
1350	732.22	16.2	28.02	0.122	3.148E-06	1133.6
1400	760.00	15.6	26.98	0.078	2.013E-06	1707.5
1450	787.78	15.2	26.29	0.155	4.000E-06	837.2
1500	815.56	15.1	26.12	0.169	4.361E-06	762.8

Table 25 lists the density and emissivity of 304L SS. The density is taken from Reference 2.2.6, Table X1.1. The emissivity is taken from Reference 2.2.7, Table 4.3.2.

Table 26 lists values of thermal conductivity, thermal diffusivity, and specific heat of 304L SS. Values for thermal conductivity and thermal diffusivity are taken from the Reference 2.2.5, Section II, Part D, Table TCD, p. 663 (material group J). The specific heat of 304L SS is calculated using Equation (2), using the density in Table 25.

Table 25. Density and Emissivity of 304L SS

Density (kg/m^3)	Emissivity
7940	0.62

Table 26. Thermal Conductivity, Thermal Diffusivity, and Specific Heat of 304L SS

Temperature		Thermal Conductivity		Thermal Diffusivity		Specific Heat (J/kg·K)
(°F)	(°C)	(Btu/hr-ft-F)	(W/m-K)	(ft^2/hr)	(m^2/s)	
70	21.11	8.6	14.87	0.151	3.897E-06	480.7
100	37.78	8.7	15.05	0.152	3.923E-06	483.1
150	65.56	9.0	15.57	0.154	3.974E-06	493.3
200	93.33	9.3	16.08	0.156	4.026E-06	503.2
250	121.11	9.6	16.60	0.158	4.077E-06	512.8
300	148.89	9.8	16.95	0.160	4.129E-06	517.0
350	176.67	10.1	17.47	0.162	4.181E-06	526.2
400	204.44	10.4	17.99	0.165	4.258E-06	532.0
450	232.22	10.6	18.33	0.167	4.310E-06	535.7
500	260.00	10.9	18.85	0.170	4.387E-06	541.2
550	287.78	11.1	19.20	0.172	4.439E-06	544.7
600	315.56	11.3	19.54	0.174	4.490E-06	548.2
650	343.33	11.6	20.06	0.177	4.568E-06	553.2
700	371.11	11.8	20.41	0.179	4.619E-06	556.4
750	398.89	12.0	20.75	0.181	4.671E-06	559.6
800	426.67	12.2	21.10	0.184	4.748E-06	559.6
850	454.44	12.5	21.62	0.186	4.800E-06	567.2
900	482.22	12.7	21.96	0.189	4.877E-06	567.2
950	510.00	12.9	22.31	0.191	4.929E-06	570.1
1000	537.78	13.2	22.83	0.194	5.006E-06	574.3
1050	565.56	13.4	23.18	0.196	5.058E-06	577.1
1100	593.33	13.6	23.52	0.198	5.110E-06	579.8
1150	621.11	13.8	23.87	0.201	5.187E-06	579.5

Table 27 lists the density, thermal conductivity, and specific heat of borosilicate glass. The density and specific heat of Pyrex will be used for borosilicate glass (Assumption 3.1.14), and are taken from Reference 2.2.40, Table A.3. The thermal conductivity is taken from Reference 2.2.8, Table 11.7 (median value).

Table 27. Density, Thermal Conductivity, and Specific Heat of Borosilicate Glass

Density (kg/m^3)	Thermal Conductivity (W/m-K)	Specific Heat (J/kg-K)
2225	1.1	835

Table 28 lists the density, thermal conductivity, and specific heat of NS-4-FR, taken from Table 3.2-1 of Reference 2.2.44 (see Attachment V, DVD 1 of 2, file: *NS-4-FR_thermal_properties.xmcd* for unit conversion). Reference 2.2.44 is a Safety Analysis Report submitted to NRC for a particular cask design, and, therefore, is a reliable source suitable for use in this calculation.

Table 28. Density, Thermal Conductivity, and Specific Heat of NS-4-FR

Density (kg/m^3)	Thermal Conductivity (W/m-K)	Specific Heat (J/kg·K)
1630	0.646	1600

Table 29 lists the thermal properties of the concrete. The value of emissivity is taken from Table A.9 of Reference 2.2.40 at a temperature of approximately 300 K. The density, thermal conductivity, and specific heat are taken from Table A.3 of Reference 2.2.40 at temperature of 300 K.

Table 29. Thermal Properties of Concrete

Density (kg/m^3)	Thermal Conductivity (W/m-K)	Specific Heat (J/kg·K)	Emissivity
2300	1.4	880	0.88

Table 30 lists the thermal properties of the shield door used in the calculation. The density and specific heat of the shield door are assumed to be the same as those for concrete. The emissivity of the shield door is assumed to be the same as that of 316 SS. The thermal conductivity of the shield door is assumed to be the same as that of NS-4-FR (Assumption 3.1.15).

Table 30. Thermal Properties of the Shield Door

Density (kg/m^3)	Thermal Conductivity (W/m-K)	Specific Heat (J/kg·K)	Emissivity
2300	0.646	880	0.62

Table 31 lists the properties of air used in the FLUENT calculations.

The atmospheric pressure of air used in the calculation is 88558 Pa. This pressure is obtained by taking the pressure at one atmosphere at sea level (101325 Pa) and multiplying it by the appropriate pressure ratio, 0.874, which is interpolated from Table 11.4.1 of Reference 2.2.7, for the site elevation of 3750 ft. Reference 2.2.45, file: *Readme.doc*, indicates that the elevation of Site 1 (NTS-60) is 3750 ft. (Note that DTN: SN0612GEOCOORD.001 (Reference 2.2.45) is cited in *IED Surface Facility and Environment* (Reference 2.2.42), and, therefore, is approved and appropriate for the intended use in this calculation). Site 1 (NTS-60) is representative of the area of the surface facilities (Reference 2.2.17 [DIRS 176722], Addendum A, Section A2).

Values for specific heat, thermal conductivity, and viscosity are taken from Reference 2.2.4 [DIRS 157789], p. 20.59. The density of air at a pressure of 88558 Pa and at the listed temperatures is calculated using the ideal gas law. See Attachment V, DVD 1 of 2, files: *air_props_51F.xmcd*, *air_props_79F.xmcd*, and *air_props_116F.xmcd* for detailed calculations of air properties.

Table 31. Thermal Properties of Air Used in FLUENT Calculations

Temperature (F)	Density		Specific Heat		Thermal Conductivity		Viscosity	
	lb/ft^3	kg/m^3	Btu/lb·°F	J/kg·K	Btu/hr·ft·F	W/m·K	lb/ft-hr	kg/s-m
51	0.0679	1.088	0.2403	1006.1	0.01444	0.025	0.0427	1.766×10^{-5}
79	0.0644	1.031	0.2404	1006.5	0.01508	0.0261	0.0445	1.841×10^{-5}
116	0.0602	0.965	0.2407	1007.6	0.0159	0.0275	0.0468	1.933×10^{-5}

Table 32 lists values of density, thermal conductivity, and specific heat of air used in the ANSYS calculations, taken from Reference 2.2.4, p. 20.59, at standard atmospheric pressure.

Table 32. Density, Thermal Conductivity, and Specific Heat of Air Used in ANSYS Calculations

Temperature		Density		Thermal Conductivity		Specific Heat	
(°F)	(°C)	(lb/ft^3)	(kg/m^3)	(Btu/hr-ft-F)	(W/m-K)	(BTU/lb-F)	(J/kg-K)
0	-17.78	0.0863	1.3824	0.01326	0.0229	0.2402	1005.6
20	-6.67	0.0827	1.3247	0.01372	0.0237	0.2402	1005.6
40	4.44	0.0794	1.2719	0.01419	0.0246	0.2403	1006.0
60	15.56	0.0763	1.2222	0.01465	0.0254	0.2403	1006.0
80	26.67	0.0735	1.1774	0.01510	0.0261	0.2404	1006.4
100	37.78	0.0709	1.1357	0.01554	0.0269	0.2405	1006.9
120	48.89	0.0684	1.0957	0.01599	0.0277	0.2407	1007.7
140	60.00	0.0661	1.0588	0.01642	0.0284	0.2408	1008.1
160	71.11	0.0640	1.0252	0.01685	0.0292	0.2410	1009.0
180	82.22	0.0620	0.9931	0.01728	0.0299	0.2412	1009.8
200	93.33	0.0601	0.9627	0.01771	0.0306	0.2414	1010.6
220	104.44	0.0583	0.9339	0.01813	0.0314	0.2417	1011.9
240	115.56	0.0567	0.9082	0.01854	0.0321	0.2420	1013.1
260	126.67	0.0551	0.8826	0.01896	0.0328	0.2423	1014.4
280	137.78	0.0536	0.8586	0.01937	0.0335	0.2426	1015.7
300	148.89	0.0522	0.8362	0.01978	0.0342	0.2430	1017.3
320	160.00	0.0508	0.8137	0.02019	0.0349	0.2433	1018.6
340	171.11	0.0496	0.7945	0.02059	0.0356	0.2437	1020.3
360	182.22	0.0484	0.7753	0.02099	0.0363	0.2442	1022.4
380	193.33	0.0472	0.7561	0.02140	0.0370	0.2446	1024.0
400	204.44	0.0461	0.7385	0.02180	0.0377	0.2451	1026.1
420	215.56	0.0451	0.7224	0.02220	0.0384	0.2455	1027.8
440	226.67	0.0441	0.7064	0.02260	0.0391	0.2460	1029.9
460	237.78	0.0431	0.6904	0.02299	0.0398	0.2465	1032.0
480	248.89	0.0422	0.6760	0.02339	0.0405	0.2471	1034.5
500	260.00	0.0413	0.6616	0.02378	0.0412	0.2476	1036.6
520	271.11	0.0405	0.6487	0.02418	0.0418	0.2482	1039.1
540	282.22	0.0397	0.6359	0.02457	0.0425	0.2487	1041.2
560	293.33	0.0389	0.6231	0.02496	0.0432	0.2493	1043.7
580	304.44	0.0381	0.6103	0.02536	0.0439	0.2499	1046.2
600	315.56	0.0374	0.5991	0.02575	0.0446	0.2505	1048.7
620	326.67	0.0367	0.5879	0.02614	0.0452	0.2511	1051.2
640	337.78	0.0360	0.5767	0.02653	0.0459	0.2517	1053.8
660	348.89	0.0354	0.5671	0.02692	0.0466	0.2524	1056.7
680	360.00	0.0348	0.5574	0.02731	0.0473	0.2530	1059.2
700	371.11	0.0342	0.5478	0.02770	0.0479	0.2536	1061.7
720	382.22	0.0336	0.5382	0.02808	0.0486	0.2543	1064.6

740	393.33	0.0330	0.5286	0.02847	0.0493	0.2549	1067.2
760	404.44	0.0325	0.5206	0.02885	0.0499	0.2555	1069.7
780	415.56	0.0320	0.5126	0.02924	0.0506	0.2562	1072.6
800	426.67	0.0315	0.5046	0.02962	0.0513	0.2568	1075.1

Table 33 lists values of density, thermal conductivity, and specific heat of helium used in the ANSYS calculations, taken from Reference 2.2.4, p. 20.55 (Assumption 3.2.10), at standard atmospheric pressure.

Table 33. Density, Thermal Conductivity, and Specific Heat of Helium Used in ANSYS Calculations

Temperature		Density		Thermal Conductivity		Specific Heat	
(°F)	(°C)	(lb/ft^3)	(kg/m^3)	(Btu/hr-ft-F)	(W/m-K)	(BTU/lb-F)	(J/kg-K)
0	-17.78	0.01192	0.19094	0.08064	0.1396	1.2412	5196.3
20	-6.67	0.01142	0.18293	0.08304	0.1437	1.2412	5196.3
40	4.44	0.01096	0.17556	0.08542	0.1478	1.2412	5196.3
60	15.56	0.01054	0.16883	0.08776	0.1519	1.2412	5196.3
80	26.67	0.01015	0.16259	0.09008	0.1559	1.2411	5195.9
100	37.78	0.00979	0.15682	0.09238	0.1599	1.2411	5195.9
120	48.89	0.00945	0.15137	0.09465	0.1638	1.2411	5195.9
140	60.00	0.00914	0.14641	0.09690	0.1677	1.2411	5195.9
160	71.11	0.00884	0.14160	0.09912	0.1715	1.2411	5195.9
180	82.22	0.00857	0.13728	0.10133	0.1754	1.2411	5195.9
200	93.33	0.00831	0.13311	0.10351	0.1791	1.2411	5195.9
240	115.56	0.00783	0.12542	0.10783	0.1866	1.2411	5195.9
280	137.78	0.00741	0.11870	0.11207	0.1940	1.2411	5195.9
320	160.00	0.00703	0.11261	0.11624	0.2012	1.2411	5195.9
360	182.22	0.00669	0.10716	0.12036	0.2083	1.2411	5195.9
400	204.44	0.00637	0.10204	0.12441	0.2153	1.2411	5195.9
440	226.67	0.00609	0.09755	0.12841	0.2222	1.2411	5195.9
480	248.89	0.00583	0.09339	0.13236	0.2291	1.2411	5195.9
520	271.11	0.00559	0.08954	0.13626	0.2358	1.2411	5195.9
560	293.33	0.00537	0.08602	0.14011	0.2425	1.2411	5195.9
600	315.56	0.00517	0.08282	0.14392	0.2491	1.2411	5195.9
640	337.78	0.00498	0.07977	0.14768	0.2556	1.2412	5196.3
680	360.00	0.00481	0.07705	0.15141	0.2620	1.2412	5196.3
720	382.22	0.00465	0.07449	0.15509	0.2684	1.2412	5196.3
760	404.44	0.00449	0.07192	0.15874	0.2747	1.2412	5196.3
800	426.67	0.00435	0.06968	0.16236	0.2810	1.2412	5196.3

6.4 HEAT LOADS

Since the analyses performed are either steady-state or short-term (30-day) transient, constant heat loads are used.

The 5-DHLW/DOE SNF Short Waste Package is modeled with five DOE HLW canisters and one DOE SNF canister. The maximum thermal output of the DOE HLW canisters is 1500 W each (Assumption 3.1.3). The maximum thermal output of the DOE SNF canister is 1970 W (Reference 2.2.11, Section 11.2.2.12). Five DOE HLW canisters at 1500 W each plus one DOE SNF canister at 1970 W gives a total maximum heat load of 9.47 kW for the 5-DHLW/DOE SNF Short Waste Package. Some cases with lower heat loads for the 5-DHLW/DOE SNF Short Waste Package are considered.

Several heat loads for the TAD Waste Package are considered: 11.8 kW, 18 kW, 25 kW, and 30 kW.

Heat generation is input into both FLUENT and ANSYS as a volumetric heat generation rate (W/m^3). Therefore, the volume of each waste form is needed. Calculation of waste form volumes is described below.

6.4.1 3-D Calculations

In the 3-D calculations, the waste forms are represented as a homogeneous, heat-generating cylinders (Assumptions 3.1.7, 3.1.9, 3.1.10, 3.1.11, 3.1.12, 3.1.13, 3.2.3 and 3.2.4). For the homogeneous cylinder representing the waste package in the trolley tube, the heat generation is applied to the entire cylinder. Therefore, the volume of the entire cylinder is used to determine the volumetric heat generation rate. For the other waste forms, the homogeneous cylinders are divided axially into an active fuel region centered between two non-fuel regions. The heat generation is applied only to the active fuel region. Therefore, the volume of the cylinder bounded by the active fuel length of the waste package is used to determine the volumetric heat generation rate.

All volumes are calculated using Equation (1).

For the homogeneous cylinder representing the waste package in the trolley tube, D is the trolley tube outer diameter (see Table 8), and L is the trolley tube height (see Assumption 3.2.16). For the TAD canister, D is the TAD canister outer diameter (see Table 5), and L is active fuel length of the TAD canister (see Assumption 3.1.2). For the DOE SNF canister, D is the DOE SNF canister outer diameter (see Table 5), and L is active fuel length of the DOE SNF canister (see Table 5). For the DOE HLW canister, D is the DOE HLW canister outer diameter (see Table 5), and L is active fuel length of the DOE HLW canister (see Table 5).

6.4.2 2-D Calculations

In the 2-D calculations, the volume of the SRS HLW and DOE SNF canisters are used to determine the volumetric heat generation rates in the 5-DHLW/DOE SNF Short Waste Package,

and the volume of the TAD canister bounded by the active fuel length (3.66 m, see Assumption 3.1.2) is used to determine the volumetric heat generation rate in the TAD Waste Package.

Table 3.3.1 of Reference 2.2.35 indicates that the fill volume of the SRS HLW canister is 0.626 m^3. Reference 2.2.35 is used, because the fill volume of the SRS HLW canister is not available in either *Basis of Design for the TAD Canister-Based Repository Design Concept* (Reference 2.2.11) or *Integrated Interface Control Document* (Reference 2.2.37).

From Figure C-4 of Reference 2.2.37, the length of the DOE SNF canister cavity is determined to be approximately 2.72 m (See Attachment V, DVD 1 of 2, file: *DOE_SNF_active_length.xmcd* for calculation). Using the outer diameter and shell thickness shown in Table 11, the interior volume of the DOE SNF canister cavity is determined to be 0.410 m^3. The glass fill volume is 85% of this value (Assumption 3.2.7) or 0.349 m^3 (See Attachment V, DVD 1 of 2, file: *DOE_SNF_active_length.xmcd* for calculation).

For the TAD canister, *D* is the TAD canister outer diameter (see Table 5), and *L* is active fuel length of the TAD canister (see Assumption 3.1.2).

6.5 BOUNDARY CONDITIONS

6.5.1 3-D Calculations, Normal Operations

Due to symmetry, an adiabatic boundary condition is applied on the south, external wall of Room 1023. Likewise, an adiabatic boundary condition is applied on the north, external wall of Room 1019. Also, for added conservatism, adiabatic boundary conditions are applied to the exterior surface beneath the concrete floors, as well as to the exterior surfaces of the doors.

For the remaining walls, the summer design temperatures of the rooms adjacent to the model boundaries are applied at the exterior surface of the respective walls. Room locations are indicated in References 2.2.23, 2.2.24, 2.2.25, 2.2.26, and 2.2.27. Temperatures are taken from Reference 2.2.29, Appendix A (Assumption 3.1.24), with specific page numbers listed in Table 34.

Table 34 lists the temperature boundary conditions applied to the exterior walls of the 3-D FLUENT models for the normal operations case. To be conservative, in situations where more than one room is adjacent to the model boundary, the temperature of the hotter room is applied to the entire boundary surface, unless otherwise indicated.

Table 34. Temperature Boundary Conditions for Normal Operations Case

Model Boundary (Room, Wall)	Rooms Adjacent to Model Boundary	Temperature (°F)	Reference
1022, East	1026	79	Reference 2.2.29, p. 78
1023, East	1026	79	Reference 2.2.29, p. 78
1022, North	1005D and 1012	90	Reference 2.2.29, p 55 and p. 66
1022, West	1005E and 1006	100	Reference 2.2.29, p. 56 (also see Note 2 on p. 56)
1023, West	1005E and 1006	100	Reference 2.2.29, p. 56 (also see Note 2 on p. 56)
1022, Ceiling	2004	79	Reference 2.2.29, p. 97
1023, Ceiling	2004	79	Reference 2.2.29, p. 97
1019, East	1005E and 1006	100	Reference 2.2.29, p. 56 (also see Note 2 on p. 56)
1021, East	1005E and 1006	100	Reference 2.2.29, p. 56 (also see Note 2 on p. 56)
1021, South	1005F and 1032	90	Reference 2.2.29, p. 57 and p. 82
1021, West	1020	90	Reference 2.2.29, p. 72
1019, South	1020	90	Reference 2.2.29, p. 72
1019, West	1015	79	Reference 2.2.29, p. 67
1021, Ceiling	2004	79	Reference 2.2.29, p. 97
1019, Ceiling (East Side)	2004	79	Reference 2.2.29, p. 97
1019, Ceiling (West Side)	2007	90	Reference 2.2.29, p. 108

6.5.2 3-D Calculations, Off-Normal Operations

Due to symmetry, an adiabatic boundary condition is applied on the south, external wall of Room 1023. Likewise, an adiabatic boundary condition is applied on the north, external wall of Room 1019. Also, for added conservatism, adiabatic boundary conditions are applied to the exterior surface beneath the concrete floors, as well as to the exterior surfaces of the doors.

For the remaining walls, the exterior surface temperatures are set equal to the maximum ambient outdoor temperature of 116 °F (46.7 °C) (Reference 2.2.13, Section 6.1.6).

6.5.2.1 Initial Conditions for 3-D ANSYS Transient Calculations

Since the 3-D ANSYS calculations are transient analyses, a temperature field representing the initial condition is required. Ideally, the results of the 3-D FLUENT calculations for the normal

condition would be used. However, the 3-D ANSYS calculations for the off-normal condition with no flow were performed first, since less work would be necessary if performance was satisfactory for these cases. Therefore, conservative boundary conditions are applied to represent a scenario with normal ventilation, and steady-state analyses are performed to obtain initial conditions.

Specifically, adiabatic conditions are applied as stated above. However, for the remaining walls, the exterior surface temperatures are set equal to 100 °F (37.8 °C), which represents the maximum boundary temperature for external walls for the normal operations case (see Table 34).

A conservative convective boundary condition is applied to all waste form surfaces and interior walls, consisting of a minimal heat transfer coefficient of 1 W/m^2-K, and an ambient temperature, which is determined by computing the average of the supply air and return air temperatures given in Reference 2.2.29 (Assumption 3.1.24). Table 35 lists the ambient temperatures used in each room of the 3-D ANSYS initial-condition models.

Table 35. Ambient Temperatures Used to Obtain Initial Conditions in 3-D ANSYS Models

Room	Supply Air Temperature (°F)	Return Air Temperature (°F)	Average Temperature	Reference
1019	79	100	89.5 °F (31.9 °C)	Reference 2.2.29, p. 39
1021	51	100	75.5 °F (24.2 °C)	Reference 2.2.29, p. 37
1022	51	100	75.5 °F (24.2 °C)	Reference 2.2.29, p. 37
1023	79	100	89.5 °F (31.9 °C)	Reference 2.2.29, p. 38

6.5.3 2-D Calculations

For the 2-D calculations of the waste package inside the trolley tube, the maximum surface temperature of the homogeneous cylinder representing the waste package in the trolley tube obtained from the 3-D solution is uniformly applied to the outer surface of the trolley tube.

7. RESULTS AND CONCLUSIONS

The outputs of this calculation are reasonable compared to the inputs, and the results are suitable for the intended use. All temperature results were obtained in Kelvin or degrees Celsius and converted to Fahrenheit in Attachment V, DVD 1 of 2, file: *CRCF_results_summary.xls*.

While uncertainties have not been quantified, this calculation provides appropriate bounding thermal results for design guidance at this time. Limiting heat loads have been used together with nominal conservative assumptions. Future work may quantify the inherent safety margin.

7.1 THERMAL LIMITS

The following thermal limits apply to this calculation:

The maximum continuous operating temperature of NS-4-FR (neutron shielding material) is 300 °F or 148.9 °C (Reference 2.2.34, p. II-5). Attachment II of Reference 2.2.34 provides vendor data from a supplier of NS-4-FR, and, therefore, is suitable for use in this calculation. This limit applies to both normal and off-normal conditions.

Section 13 of Reference 2.2.37 establishes a 400 °C limit on the temperature of vitrified glass in the HLW canisters through emplacement in the repository subsurface facilities. This limit applies to both normal and off-normal conditions.

During normal operations, the DOE SNF canister wall temperature must not exceed 315.5 °C in enclosed environments, and 148.9 °C in open (air) environments (Reference 2.2.37, Section 10.1.3).

Section 11.2.2.18 of Reference 2.2.11, states that the cladding temperature for DOE SNF of commercial origin placed in disposable multi-element canisters shall not exceed 350 °C for zircaloy-clad assemblies or 400 °C for stainless steel-clad assemblies. Since the internals of the DOE SNF canister are not explicitly modeled in this calculation (see Assumption 3.2.7), the more restrictive limit of 350 °C will be used.

During normal operations, the maximum SNF cladding temperature in the TAD canister must not exceed 400 °C. During off-normal conditions, the maximum SNF cladding temperature in the TAD canister must not exceed 570 °C (Reference 2.2.15, Section 3.7.1).

The waste package surface temperature must not exceed 300 °C (Reference 2.2.11, Section 11.1.1). This limit applies to both normal and off-normal conditions.

Section A.4.1 of Reference 2.2.1 indicates that for normal operations or any other long term period, "the temperature of the concrete shall not exceed 150 °F (~66 °C), except for local areas, such as around penetrations, which are allowed to have increased temperatures not to exceed 200 °F (~93 °C)." Section A.4.2 of Reference 2.2.1 indicates that for accident or any other short term period, the concrete surface temperature shall not exceed 350 °F (~177 °C).

7.2 RESULTS FOR NORMAL CONDITION

7.2.1 3-D FLUENT Results for Rooms 1022 & 1023, Normal Condition

Steady-state 3-D FLUENT analyses were performed for heat load pairs listed in Table 36. Results are presented in Table 37 through Table 42. Concrete thermal limits are exceeded in Room 1022 when it contains a 25 kW TAD canister (Case 4) and when it contains a 30 kW TAD canister (Case 5). Concrete thermal limits are exceeded by a small amount in Room 1023 with a 30 kW heat load (Case 5).

The depths of the hot spots in the concrete walls in Room 1022 are illustrated in Figure 8 and Figure 9. Figure 8 shows the temperatures at a horizontal plane that passes through the hottest portion of the model for Case 4. Figure 9 shows the temperatures at a horizontal plane that passes through the hottest portion of the model for Case 5. Figure 10 shows the temperatures on the interior surface of the ceiling in Room 1023. In all three figures, areas above 150 °F (~66 °C) are shown in white.

Table 36. 3-D FLUENT cases for Rooms 1022 & 1023, Normal Condition

Case	Heat Load of TAD Canister in Room 1022 (kW)	Heat Load of WP in Tube In Room 1023 (kW)
1	30	9.47
2	11.8	11.8
3	18	18
4	25	25
5	30	30

Table 37. Peak TAD Canister Temperatures in Room 1022, Normal Condition

TAD Canister Heat Load (kW)	TAD Canister Surface (°C)	TAD Canister Surface (°F)	TAD Canister Cladding (°C)	TAD Canister Cladding (°F)
11.8	109.1	228.5	163.1	325.5
18	144.0	291.3	227.6	441.7
25	176.8	350.3	294.4	561.9
30	197.2	387.0	339.2	642.6

Table 38. Peak Trolley Tube Surface Temperatures in Room 1023, Normal Condition

WP in Tube Heat Load (kW)	Trolley Tube Surface (°C)	Trolley Tube Surface (°F)
9.47	54.9	130.9
11.8	60.2	140.4
18	75.4	167.7
25	91.0	195.9
30	101.4	214.5

Table 39. Peak Concrete Temperatures (°C) in Room 1022, Normal Condition

TAD Canister Heat Load (kW)	Floor	Ceiling	North Wall	East Wall	South Wall	West Wall
11.8	31.8	33.0	43.2	32.5	48.5	37.1
18	36.5	39.2	56.8	39.8	64.8	46.2
25	43.7	47.7	72.0	48.3	82.6	56.9
30	49.1	53.9	82.8	54.6	94.8	64.6

Table 40. Peak Concrete Temperatures (°F) in Room 1022, Normal Condition

TAD Canister Heat Load (kW)	Floor	Ceiling	North Wall	East Wall	South Wall	West Wall
11.8	89.2	91.3	109.8	90.5	119.3	98.8
18	97.7	102.6	134.2	103.6	148.6	115.2
25	110.6	117.8	161.7	119.0	180.7	134.4
30	120.3	129.0	181.0	130.2	202.7	148.3

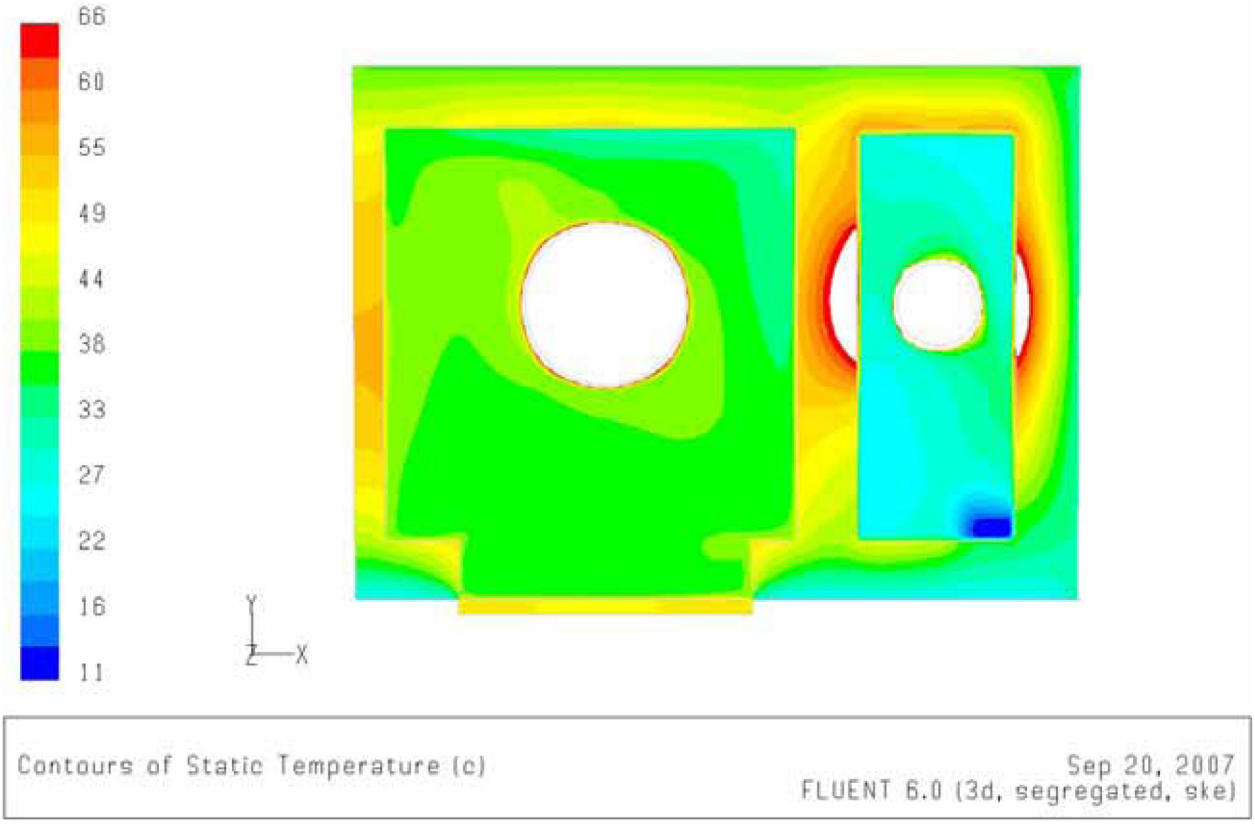

Figure 8. Temperatures (°C) Through Hottest Portion of Rooms 1022 and 1023, Normal Operations, Case 4

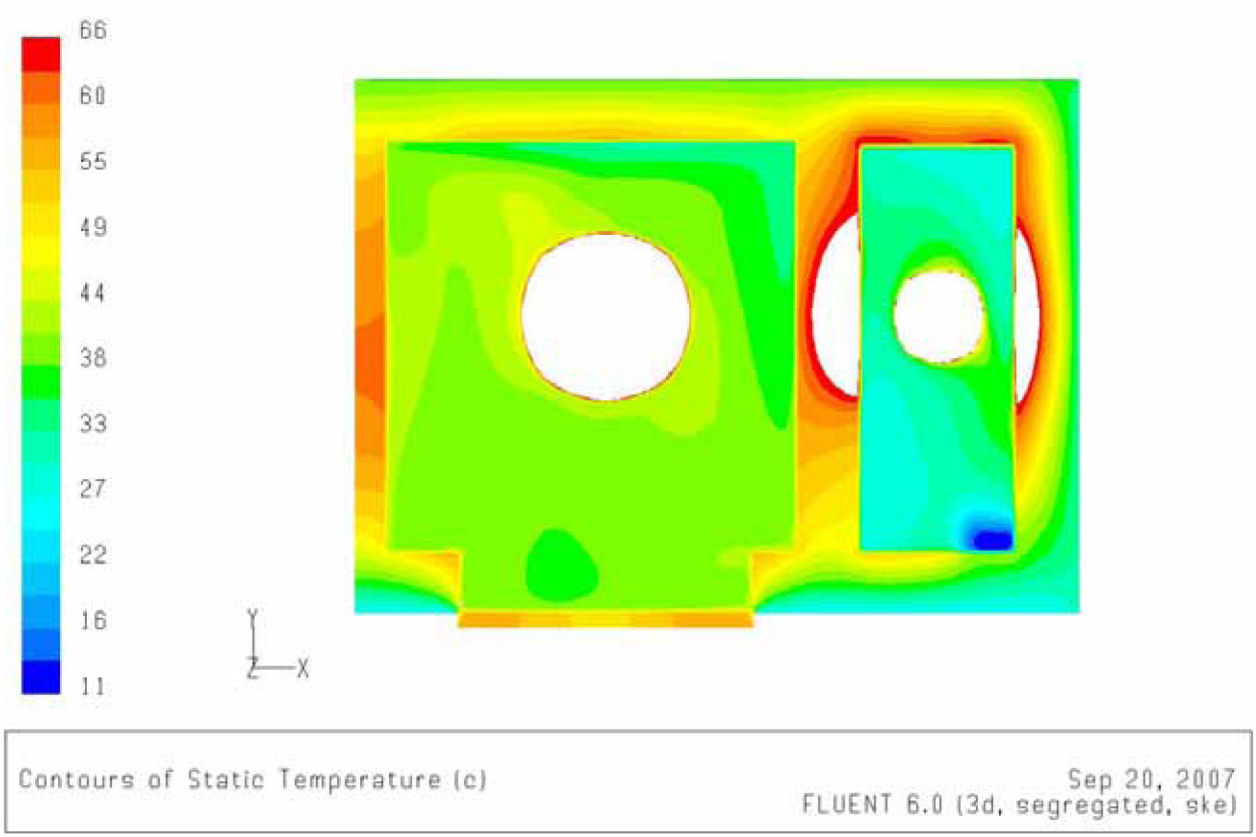

Figure 9. Temperatures (°C) Through Hottest Portion of Rooms 1022 and 1023, Normal Operations, Case 5

Table 41. Peak Concrete Temperatures (°C) in Room 1023, Normal Condition

WP in Tube Heat Load (kW)	Floor	Ceiling	North Wall	East Wall	South Wall	West Wall
9.47	36.9	39.6	43.0	37.4	39.0	37.9
11.8	38.0	41.7	39.2	37.8	40.4	38.6
18	43.9	49.8	46.5	43.9	47.4	44.3
25	50.8	59.2	54.7	50.9	55.4	50.9
30	55.8	65.8	60.6	55.9	61.0	55.6

Table 42. Peak Concrete Temperatures (°F) in Room 1023, Normal Condition

WP in Tube Heat Load (kW)	Floor	Ceiling	North Wall	East Wall	South Wall	West Wall
9.47	98.4	103.3	109.4	99.4	102.2	100.3
11.8	100.3	107.1	102.6	100.1	104.7	101.5
18	111.0	121.7	115.7	111.0	117.4	111.7
25	123.5	138.5	130.5	123.6	131.7	123.6
30	132.5	150.5	141.0	132.6	141.9	132.2

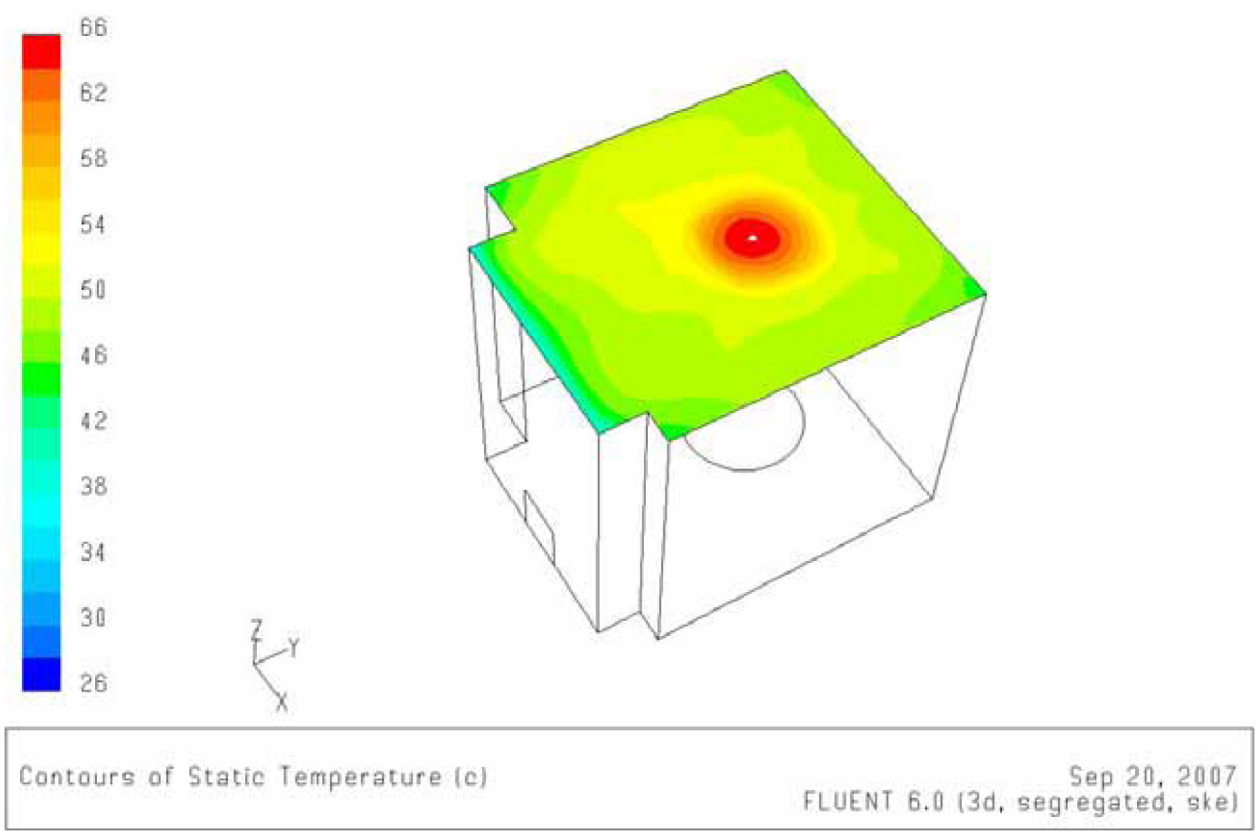

Figure 10. Ceiling Temperature (°C) of Room 1023, Normal Operations, Case 5

7.2.2 3-D FLUENT Results for Rooms 1019 & 1021, Normal Condition

Steady-state 3-D FLUENT analyses were performed for heat load pairs listed in Table 43. Results are presented in Table 44 through Table 50. Concrete thermal limits are exceeded in Room 1019 with a 30 kW heat load (Case 5).

Figure 11 shows the temperatures on the interior surface of the ceiling in Room 1019. The small area above 150 °F (~66 °C) is shown in white.

Table 43. 3-D FLUENT cases for Rooms 1019 & 1021, Normal Condition

Case	Heat Load of WP in Tube In Room 1019 (kW)	Total Heat Load of DOE Canisters In Room 1021 (kW)
1	9.47	9.47
2	11.8	9.47
3	18	9.47
4	25	9.47
5	30	9.47

Table 44. Peak Trolley Tube Surface Temperatures in Room 1019, Normal Condition

WP in Tube Heat Load (kW)	Trolley Tube Surface (°C)	Trolley Tube Surface (°F)
9.47	54.9	130.9
11.8	61.2	142.1
18	76.4	169.5
25	92.3	198.2
30	103.0	217.3

Table 45. Peak DOE SNF Canister Temperatures in Room 1021, Normal Condition

Heat Load In 1019 (kW)	DOE SNF Canister Surface (°C)	DOE SNF Canister Surface (°F)	DOE SNF (°C)	DOE SNF (°F)
9.47	131.1	268.0	187.1	368.7
11.8	131.3	268.3	187.2	369.0
18	131.6	268.9	187.6	369.7
25	132.1	269.7	188.1	370.6
30	132.4	270.3	188.4	371.2

Table 46. Peak DOE HLW Canister Temperatures in Room 1021, Normal Condition

Heat Load In 1019 (kW)	DOE HLW Canister Surface (°C)	DOE HLW Canister Surface (°F)	DOE HLW (°C)	DOE HLW (°F)
9.47	104.0	219.1	145.7	294.2
11.8	104.1	219.5	145.8	294.5
18	104.6	220.3	146.3	295.3
25	105.2	221.3	146.8	296.3
30	105.6	222.1	147.2	297.0

Table 47. Peak Concrete Temperatures (°C) in Room 1019, Normal Condition

WP in Tube Heat Load (kW)	Floor	Ceiling	North Wall	East Wall	South Wall	West Wall
9.47	35.1	40.3	35.8	37.3	39.0	30.9
11.8	36.3	43.5	37.7	39.2	40.9	31.6
18	40.2	51.6	42.6	44.2	45.7	33.3
25	45.2	60.9	48.2	50.0	51.4	35.3
30	48.8	67.4	52.3	54.1	55.4	36.8

Table 48. Peak Concrete Temperatures (°F) in Room 1019, Normal Condition

WP in Tube Heat Load (kW)	Floor	Ceiling	North Wall	East Wall	South Wall	West Wall
9.47	95.3	104.6	96.5	99.1	102.2	87.7
11.8	97.4	110.3	99.9	102.5	105.5	88.9
18	104.4	125.0	108.7	111.5	114.3	91.9
25	113.3	141.6	118.8	121.9	124.5	95.6
30	119.8	153.4	126.1	129.4	131.8	98.3

Table 49. Peak Concrete Temperatures (°C) in Room 1021, Normal Condition

Heat Load In 1019 (kW)	Floor	Ceiling	North Wall	East Wall	South Wall	West Wall
9.47	41.1	42.7	60.0	42.8	52.2	39.0
11.8	41.4	42.9	60.4	43.1	52.5	39.2
18	42.1	43.6	61.4	43.7	53.0	39.9
25	42.9	44.3	62.6	44.5	53.7	40.7
30	43.6	44.9	63.5	45.1	54.2	41.4

Table 50. Peak Concrete Temperatures (°F) in Room 1021, Normal Condition

Heat Load In 1019 (kW)	Floor	Ceiling	North Wall	East Wall	South Wall	West Wall
9.47	106.0	108.9	139.9	109.1	126.0	102.1
11.8	106.5	109.3	140.7	109.6	126.4	102.6
18	107.7	110.4	142.5	110.7	127.4	103.8
25	109.3	111.8	144.7	112.1	128.7	105.3
30	110.5	112.8	146.3	113.2	129.6	106.5

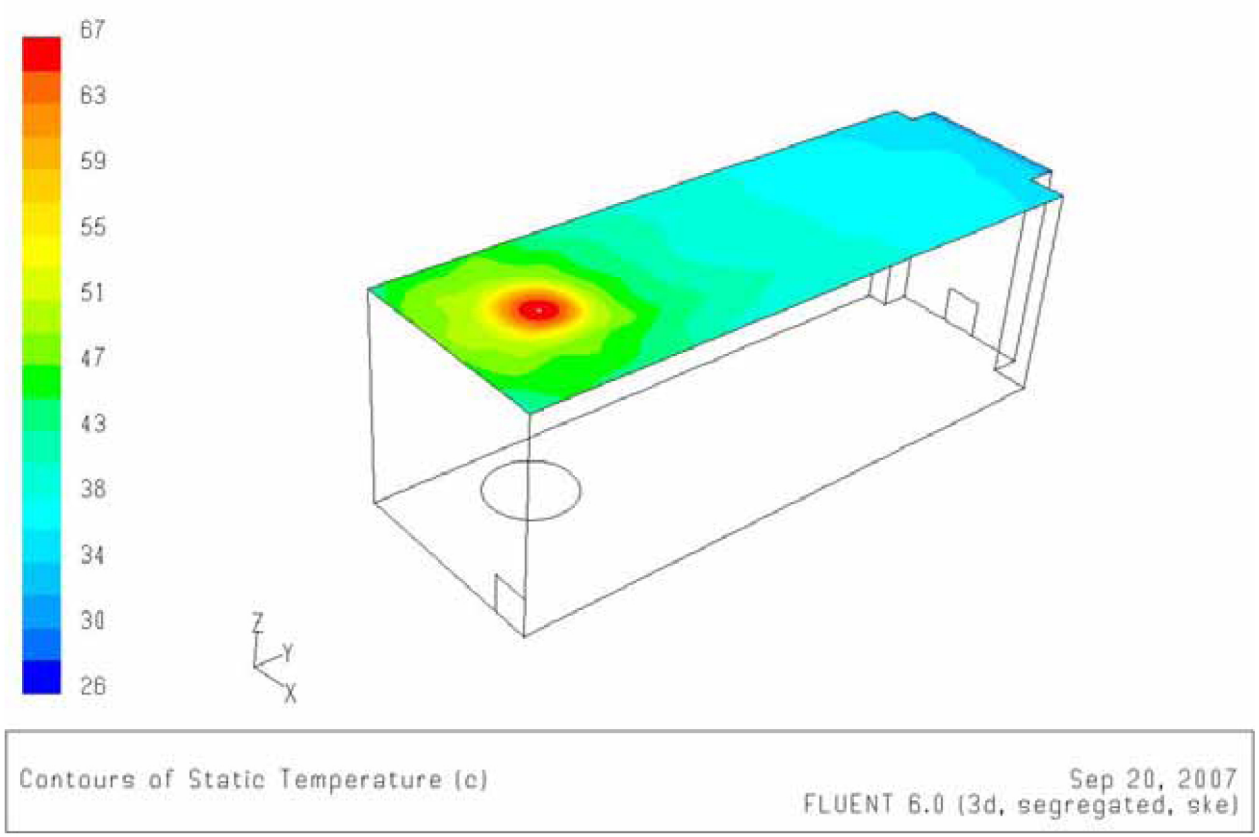

Figure 11. Ceiling Temperature (°C) of Room 1019, Normal Operations, Case 5

7.2.3 2-D ANSYS Results for WP in Trolley Tube in Room 1019, Normal Condition

Comparing Table 38 and Table 44, the peak trolley tube surface temperatures for the normal operating condition occur in Room 1019.

7.2.3.1 TAD Waste Package in Trolley Tube, Normal Condition

Steady-state 2-D ANSYS analyses were performed for each heat load with the maximum trolley tube surface temperatures listed in Table 44. Results are presented in Table 51 and Table 52.

As shown in Table 51, the TAD canister cladding temperature exceeds the 400 °C limit for the 25 kW and 30 kW cases. Based on linear regression, the maximum heat load the TAD Waste Package can have inside the trolley tube (with an effective thermal conductivity of NS-4-FR of 6.5 W/m-K) without exceeding temperature limits is 23 kW (see Attachment V, DVD 1 of 2, file: *CRCF_results_summary.xls*, Tab: *NORMAL FLOW, SS* for calculation).

In order to confirm this result, a 2-D steady-state analysis was performed in ANSYS for the TAD Waste Package with a heat load of 23 kW inside the trolley tube, with an effective thermal conductivity of NS-4-FR of 6.5 W/m-K. In order to get a peak trolley tube surface temperature to apply as a boundary condition, without running a new 3-D ANSYS case, linear regression was performed on the peak trolley tube surface temperature results listed in Table 44, yielding a peak trolley tube surface temperature of 87.2 °C (see Attachment V, DVD 1 of 2, file: *CRCF_results_summary.xls*, Tab: *NORMAL FLOW, SS* for calculation). The results for the 23 kW TAD Waste Package in the trolley tube are shown in Table 51 and Table 52.

Table 51. TAD Waste Package in Trolley Tube Peak Temperatures (°C), Normal Condition

WP Heat Load (kW)	NS-4-FR (k = 6.5)	Tube Inside Surface	WP OCB	WP IV	TAD Canister Surface	TAD Canister Cladding
11.8	70.8	73.2	134.4	168.8	195.6	255.4
18	91.1	94.7	169.8	213.5	247.9	339.1
25	112.7	117.8	203.3	254.6	295.8	422.4
30	127.5	133.6	224.3	280.1	325.2	477.2
23	106.0	110.7	193.9	243.3	282.7	399.3

Table 52. TAD Waste Package in Trolley Tube Peak Temperatures (°F), Normal Condition

WP Heat Load (kW)	NS-4-FR (k = 6.5)	Tube Inside Surface	WP OCB	WP IV	TAD Canister Surface	TAD Canister Cladding
11.8	159.5	163.8	273.9	335.9	384.0	491.7
18	196.0	202.5	337.7	416.2	478.3	642.5
25	234.9	244.0	397.9	490.3	564.4	792.4
30	261.5	272.5	435.8	536.2	617.3	891.0
23	222.8	231.2	381.0	469.9	540.9	750.7

7.2.3.2 5-DHLW/DOE SNF Short Waste Package in Trolley Tube, Normal Condition

A steady-state 2-D ANSYS analysis was performed with the maximum trolley tube surface temperature obtained with a 9.47 kW heat load (see Table 44). Results are presented in Table 53 through Table 56.

For the case of a fully loaded 5-DHLW/DOE SNF Short Waste Package (1 DOE SNF canister @ 1.97 kW + 5 DOE HLW canisters @ 1.5 kW each = 9.47 kW), both the DOE SNF and the DOE SNF canister exceed thermal limits. In order to examine at what heat loads the DOE SNF and the DOE SNF canister temperature limits are not exceeded, additional 2-D steady-state analyses were performed in ANSYS for the 5-DHLW/DOE SNF Short Waste Package inside the trolley tube (with an effective thermal conductivity of NS-4-FR of 6.5 W/m-K) with lower total waste package heat loads.

In order to get a peak trolley tube surface temperature to apply as a boundary condition, without running a new 3-D ANSYS cases, linear regression was performed on the peak trolley tube surface temperature results listed in Table 44. For total waste package heat loads of 6.97 kW, 1.97 kW, and 1.5 kW, peak trolley tube surface temperatures of 49.8 °C, 38.1 °C, and 37.0 °C, respectively (see Attachment V, DVD 1 of 2, file: *CRCF_results_summary.xls*, Tab: *NORMAL FLOW, SS* for calculation). The results are also presented in Table 53 through Table 56.

For the case of a 5-DHLW/DOE SNF Short Waste Package at 6.97 kW (1 DOE SNF canister @ 1.97 kW + 5 DOE HLW canisters @ 1.0 kW each = 6.97 kW), the DOE SNF is below the limit of 350 °C. The DOE SNF canister is below the limit of 315.5 °C for enclosed environments, but exceeds the 148.9 °C limit for open (air) environments. The same is true for the case of a 5-DHLW/DOE SNF Short Waste Package at 1.97 kW (1 DOE SNF canister @ 1.97 kW + 5 DOE HLW canisters @ 0 kW each = 1.97 kW). For the case of a 5-DHLW/DOE SNF Short Waste Package at 1.5 kW (1 DOE SNF canister @ 1.5 kW + 5 DOE HLW canisters @ 0 kW each = 1.5 kW), the DOE SNF is below the limit of 350 °C, and the DOE SNF canister is below the 148.9 °C limit for open (air) environments.

Table 53. 5-DHLW/DOE SNF Short WP in Trolley Tube Peak Temperatures (°C), Normal Condition

WP Heat Load (kW)	NS-4-FR (k = 6.5)	Tube Inside Surface	WP OCB	WP IV
9.47	67.3	70.3	142.1	181.4
6.97	58.9	61.1	120.6	153.2
1.97	40.6	41.3	64.6	77.3
1.5	38.9	39.4	57.9	68.0

Table 54. 5-DHLW/DOE SNF Short WP in Trolley Tube Peak Temperatures (°F), Normal Condition

WP Heat Load (kW)	NS-4-FR (k = 6.5)	Tube Inside Surface	WP OCB	WP IV
9.47	153.1	158.6	287.8	358.5
6.97	138.0	142.0	249.1	307.8
1.97	105.2	106.3	148.3	171.1
1.5	102.1	103.0	136.2	154.4

Table 55. 5-DHLW/DOE SNF Short WP in Trolley Tube Peak Canister Temperatures (°C), Normal Condition

WP Heat Load (kW)	DOE SNF Canister Surface	DOE SNF	DOE HLW Canister Surface	DOE HLW
9.47	326.3	388.0	310.9	320.1
6.97	284.3	345.9	263.5	265.8
1.97	175.3	236.9	N/A	N/A
1.5	147.2	194.1	N/A	N/A

Table 56. 5-DHLW/DOE SNF Short WP in Trolley Tube Peak Canister Temperatures (°F), Normal Condition

WP Heat Load (kW)	DOE SNF Canister Surface	DOE SNF	DOE HLW Canister Surface	DOE HLW
9.47	619.4	730.4	591.6	608.2
6.97	543.7	654.7	506.2	510.4
1.97	347.5	458.5	N/A	N/A
1.5	296.9	381.4	N/A	N/A

7.3 RESULTS FOR OFF-NORMAL CASE WITH REDUCED FLOW (ITS EXHAUST)

7.3.1 3-D FLUENT Results for Rooms 1022 & 1023, Off-Normal, Reduced Flow

Steady-state 3-D FLUENT analyses were performed for heat load pairs listed in Table 57. Results are presented in Table 58 through Table 63. The concrete off-normal temperature limit of 350 ºF (~177 ºC) is exceeded in Room 1022 when it contains a 30 kW TAD canister (Case 5).

The depths of the hot spots in the concrete walls in Room 1022 are illustrated in Figure 12. Figure 12 shows the temperatures at a horizontal plane that passes through the hottest portion of the model for Case 5. The areas with temperatures above 350 °F (~177 °C) are shown in white.

Table 57. 3-D FLUENT cases for Rooms 1022 & 1023, Off-Normal, Reduced Flow

Case	Heat Load of TAD Canister in Room 1022 (kW)	Heat Load of WP in Tube In Room 1023 (kW)
1	30	9.47
2	11.8	11.8
3	18	18
4	25	25
5	30	30

Table 58. Peak TAD Canister Temperatures in Room 1022, Off-Normal, Reduced Flow

TAD Canister Heat Load (kW)	TAD Canister Surface (°C)	TAD Canister Surface (°F)	TAD Canister Cladding (°C)	TAD Canister Cladding (°F)
11.8	162.6	324.8	216.2	421.2
18	202.6	396.7	285.8	546.5
25	240.3	464.6	357.4	675.3
30	264.2	507.5	405.6	762.1

Table 59. Peak Trolley Tube Surface Temperatures in Room 1023, Off-Normal, Reduced Flow

WP in Tube Heat Load (kW)	Trolley Tube Surface (°C)	Trolley Tube Surface (°F)
9.47	92.5	198.6
11.8	89.8	193.6
18	109.1	228.5
25	129.2	264.6
30	142.6	288.6

Table 60. Peak Concrete Temperatures (°C) in Room 1022, Off-Normal, Reduced Flow

TAD Canister Heat Load (kW)	Floor	Ceiling	North Wall	East Wall	South Wall	West Wall
11.8	89.3	88.6	103.2	88.9	111.7	93.3
18	111.3	110.6	130.4	110.9	140.6	117.0
25	136.0	135.2	159.3	135.4	170.5	143.0
30	153.5	152.8	179.1	152.9	190.5	161.2

Table 61. Peak Concrete Temperatures (°F) in Room 1022, Off-Normal, Reduced Flow

TAD Canister Heat Load (kW)	Floor	Ceiling	North Wall	East Wall	South Wall	West Wall
11.8	192.7	191.5	217.8	192.0	233.1	199.9
18	232.4	231.0	266.7	231.5	285.1	242.5
25	276.8	275.4	318.8	275.8	338.8	289.4
30	308.2	307.0	354.3	307.1	374.9	322.2

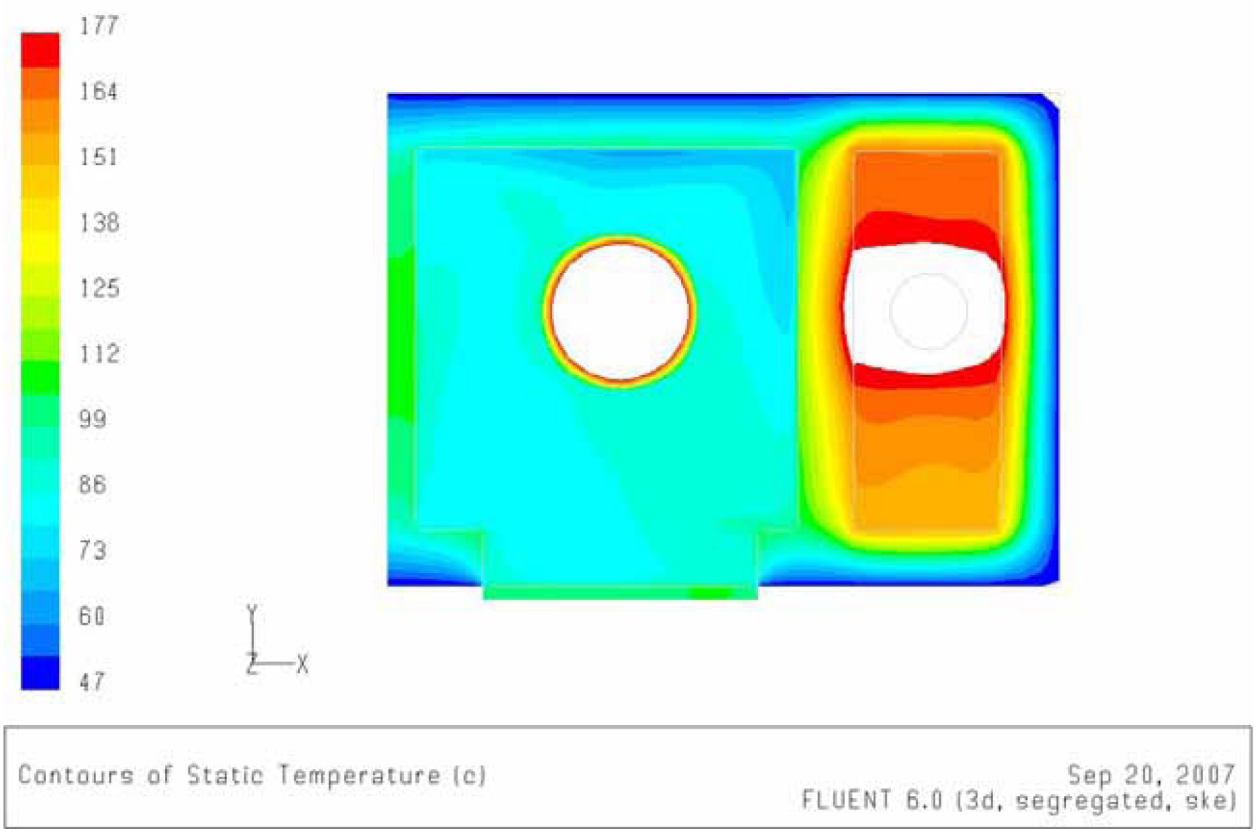

Figure 12. Temperatures (°C) Through Hottest Portion of Rooms 1022 and 1023, Off-Normal, Reduced Flow, Case 5

Table 62. Peak Concrete Temperatures (°C) in Room 1023, Off-Normal, Reduced Flow

WP in Tube Heat Load (kW)	Floor	Ceiling	North Wall	East Wall	South Wall	West Wall
9.47	82.8	77.6	86.8	77.6	74.4	76.4
11.8	72.0	74.3	76.5	71.0	71.8	69.6
18	84.6	88.2	90.5	83.3	84.3	81.2
25	98.6	103.6	105.4	96.8	97.9	94.2
30	108.3	114.2	115.6	106.2	107.3	103.3

Table 63. Peak Concrete Temperatures (°F) in Room 1023, Off-Normal, Reduced Flow

WP in Tube Heat Load (kW)	Floor	Ceiling	North Wall	East Wall	South Wall	West Wall
9.47	181.0	171.6	188.2	171.7	165.9	169.4
11.8	161.5	165.7	169.7	159.8	161.3	157.2
18	184.4	190.8	194.9	181.9	183.7	178.2
25	209.4	218.4	221.7	206.2	208.2	201.5
30	226.9	237.6	240.0	223.2	225.1	217.9

7.3.2 3-D FLUENT Results for Rooms 1019 & 1021, Off-Normal, Reduced Flow

Steady-state 3-D FLUENT analyses were performed for heat load pairs listed in Table 64. Results are presented in Table 65 through Table 71.

Table 64. 3-D FLUENT cases for Rooms 1019 & 1021, Off-Normal, Reduced Flow

Case	Heat Load of WP in Tube In Room 1019 (kW)	Total Heat Load of DOE Canisters In Room 1021 (kW)
1	9.47	9.47
2	11.8	9.47
3	18	9.47
4	25	9.47
5	30	9.47

Table 65. Peak Trolley Tube Surface Temperatures in Room 1019, Off-Normal, Reduced Flow

WP in Tube Heat Load (kW)	Trolley Tube Surface (°C)	Trolley Tube Surface (°F)
9.47	82.2	179.9
11.8	89.4	192.9
18	107.1	224.8
25	125.4	257.6
30	137.4	279.4

Table 66. Peak DOE SNF Canister Temperatures in Room 1021, Off-Normal, Reduced Flow

Heat Load In 1019 (kW)	DOE SNF Canister Surface (°C)	DOE SNF Canister Surface (°F)	DOE SNF (°C)	DOE SNF (°F)
9.47	156.0	312.7	213.6	416.5
11.8	156.4	313.5	214.0	417.3
18	157.5	315.6	215.3	419.5
25	158.9	318.0	216.7	422.1
30	159.8	319.7	217.7	423.9

Table 67. Peak DOE HLW Canister Temperatures in Room 1021, Off-Normal, Reduced Flow

Heat Load In 1019 (kW)	DOE HLW Canister Surface (°C)	DOE HLW Canister Surface (°F)	DOE HLW (°C)	DOE HLW (°F)
9.47	132.9	271.1	174.6	346.3
11.8	133.4	272.1	175.1	347.2
18	134.8	274.7	176.5	349.7
25	136.5	277.7	178.1	352.6
30	137.7	279.8	179.2	354.6

Table 68. Peak Concrete Temperatures (°C) in Room 1019, Off-Normal, Reduced Flow

WP in Tube Heat Load (kW)	Floor	Ceiling	North Wall	East Wall	South Wall	West Wall
9.47	64.6	68.8	64.3	64.6	68.8	55.2
11.8	67.9	73.5	67.8	68.1	72.0	56.7
18	77.1	85.4	76.9	77.3	80.5	60.9
25	87.1	98.5	87.0	87.5	90.0	65.7
30	94.2	107.5	94.0	94.6	96.6	69.3

Table 69. Peak Concrete Temperatures (°F) in Room 1019, Off-Normal, Reduced Flow

WP in Tube Heat Load (kW)	Floor	Ceiling	North Wall	East Wall	South Wall	West Wall
9.47	148.3	155.9	147.8	148.3	155.8	131.3
11.8	154.3	164.2	154.1	154.6	161.6	134.0
18	170.7	185.8	170.5	171.2	177.0	141.6
25	188.9	209.3	188.6	189.5	194.0	150.3
30	201.6	225.5	201.2	202.3	206.0	156.7

Table 70. Peak Concrete Temperatures (°C) in Room 1021, Off-Normal, Reduced Flow

Heat Load In 1019 (kW)	Floor	Ceiling	North Wall	East Wall	South Wall	West Wall
9.47	76.8	75.9	96.2	73.3	85.1	70.9
11.8	77.6	76.6	97.1	74.0	85.7	71.5
18	79.8	78.5	99.5	75.9	87.5	73.4
25	82.6	80.6	102.3	78.1	89.5	75.8
30	84.6	82.2	104.2	79.7	90.9	77.5

Table 71. Peak Concrete Temperatures (°F) in Room 1021, Off-Normal, Reduced Flow

Heat Load In 1019 (kW)	Floor	Ceiling	North Wall	East Wall	South Wall	West Wall
9.47	170.3	168.6	205.1	163.9	185.1	159.6
11.8	171.7	169.9	206.8	165.2	186.3	160.8
18	175.7	173.3	211.2	168.6	189.4	164.1
25	180.6	177.2	216.1	172.6	193.0	168.4
30	184.2	179.9	219.5	175.4	195.6	171.6

7.3.3 2-D ANSYS Results for WP in Trolley Tube in Room 1019, Off-Normal, Reduced Flow

Comparing Table 59 and Table 65, the peak trolley tube surface temperatures for the off-normal condition with reduced air flow occur in Room 1023.

7.3.3.1 TAD Waste Package in Trolley Tube, Off-Normal, Reduced Flow

Steady-state 2-D ANSYS analyses were performed for each heat load with the maximum trolley tube surface temperatures listed in Table 59. Results are presented in Table 72 and Table 73.

As shown in Table 72, the NS-4-FR neutron shield in the trolley tube exceeds the 148.9 °C limit for the 25 kW and 30 kW cases. Based on linear regression, the maximum heat load the TAD Waste Package can have inside the trolley tube (with an effective thermal conductivity of NS-4-FR of 6.5 W/m-K) without exceeding the NS-4-FR temperature limits is 24.9 kW (see Attachment V, DVD 1 of 2, file: *CRCF_results_summary.xls*, Tab: *OFF-NORMAL, ITS EXHAUST, SS* for calculation).

Table 72. TAD Waste Package in Trolley Tube Peak Temperatures (°C), Off-Normal, Reduced Flow

WP Heat Load (kW)	NS-4-FR (k = 6.5)	Tube Inside Surface	WP OCB	WP IV	TAD Canister Surface	TAD Canister Cladding
11.8	99.4	101.8	153.0	184.7	210.1	269.9
18	123.8	127.5	189.9	230.1	262.8	354.0
25	149.6	154.8	225.3	272.5	311.4	438.1
30	167.1	173.3	247.9	298.9	341.5	493.5

Table 73. TAD Waste Package in Trolley Tube Peak Temperatures (°F), Off-Normal, Reduced Flow

WP Heat Load (kW)	NS-4-FR (k = 6.5)	Tube Inside Surface	WP OCB	WP IV	TAD Canister Surface	TAD Canister Cladding
11.8	211.0	215.3	307.4	364.5	410.2	517.8
18	254.8	261.4	373.9	446.2	505.0	669.2
25	301.3	310.6	437.6	522.4	592.5	820.5
30	332.8	343.9	478.1	570.1	646.7	920.4

7.3.3.2 5-DHLW/DOE SNF Short WP in Trolley Tube, Off-Normal, Reduced Flow

A steady-state 2-D ANSYS analysis was performed with the maximum trolley tube surface temperature obtained with a 9.47 kW heat load (see Table 59). Results are presented in Table 74 through Table 77. The DOE SNF canister exceeds the limit of 315.5 °C for enclosed environments, and thus also exceeds the 148.9 °C limit for open (air) environments.

Table 74. 5-DHLW/DOE SNF Short WP in Trolley Tube Peak Temperatures (°C), Off-Normal, Reduced Flow

WP Heat Load (kW)	NS-4-FR (k = 6.5)	Tube Inside Surface	WP OCB	WP IV
9.47	104.9	108.0	165.4	201.2

Table 75. 5-DHLW/DOE SNF Short WP in Trolley Tube Peak Temperatures (°F), Off-Normal, Reduced Flow

WP Heat Load (kW)	NS-4-FR (k = 6.5)	Tube Inside Surface	WP OCB	WP IV
9.47	220.8	226.3	329.7	394.2

Table 76. 5-DHLW/DOE SNF Short WP in Trolley Tube Peak Canister Temperatures (°C), Off-Normal, Reduced Flow

WP Heat Load (kW)	DOE SNF Canister Surface	DOE SNF	DOE HLW Canister Surface	DOE HLW
9.47	339.6	401.2	325.0	334.5

Table 77. 5-DHLW/DOE SNF Short WP in Trolley Tube Peak Canister Temperatures (°F), Off-Normal, Reduced Flow

WP Heat Load (kW)	DOE SNF Canister Surface	DOE SNF	DOE HLW Canister Surface	DOE HLW
9.47	643.2	754.2	616.9	634.1

7.4 RESULTS FOR OFF-NORMAL CASE WITH NO FLOW

7.4.1 3-D ANSYS Results for Rooms 1022 & 1023, Off-Normal, No Flow

Transient 3-D ANSYS analyses were performed up to a time of 30 days for heat load pairs listed in Table 78. Peak temperature results at 30 days are presented in Table 79 through Table 84. The concrete off-normal temperature limit of 350 ºF (~177 ºC) is exceeded in Room 1022 when it contains a 30 kW TAD canister (Case 5) for more than 19 days, as shown in Figure 13 (see Attachment V, DVD 2 of 2, file: \ CRCF_3D_ANSYS_OFFNORM \ CRCF_1022-1023 \ 30000_30000 \ *cask_30_tad_ 30_peak_ temps_tr.xls* for calculation). Plots showing the concrete temperature histories for all rooms considered are located in Attachment VI.

The depths of the hot spots in the concrete walls in Room 1022 are illustrated in Figure 14. Figure 14 shows the temperatures at a horizontal plane that passes through the hottest portion of the model for Case 5. The areas with temperatures above 350 °F (~177 °C) are shown in gray.

Table 78. 3-D ANSYS cases for Rooms 1022 & 1023, Off-Normal, No Flow

Case	Heat Load of TAD Canister in Room 1022 (kW)	Heat Load of WP in Tube In Room 1023 (kW)
1	30	9.47
2	11.8	11.8
3	18	18
4	25	25
5	30	30

Table 79. Peak TAD Canister Temperatures in Room 1022, Off-Normal, No Flow, at 30 Days

TAD Canister Heat Load (kW)	TAD Canister Surface (°C)	TAD Canister Surface (°F)	TAD Canister Cladding (°C)	TAD Canister Cladding (°F)
11.8	159.5	319.1	212.6	414.7
18	199.3	390.7	281.8	539.3
25	236.7	458.0	352.9	667.2
30	260.2	500.4	400.7	753.2

Table 80. Peak Trolley Tube Surface Temperatures in Room 1023, Off-Normal, No Flow, at 30 Days

WP in Tube Heat Load (kW)	Trolley Tube Surface (°C)	Trolley Tube Surface (°F)
9.47	106.8	224.2
11.8	113.4	236.1
18	143.2	289.8
25	172.5	342.5
30	191.4	376.5

Table 81. Peak Concrete Temperatures (°C) in Room 1022, Off-Normal, No Flow, at 30 Days

TAD Canister Heat Load (kW)	Floor	Ceiling	North Wall	East Wall	South Wall	West Wall
11.8	80.7	80.5	97.9	83.3	107.4	87.4
18	101.5	101.1	124.7	104.5	136.3	110.4
25	124.9	124.3	153.1	128.2	165.9	135.7
30	141.5	140.9	172.4	144.9	185.6	153.4

Table 82. Peak Concrete Temperatures (°F) in Room 1022, Off-Normal, No Flow, at 30 Days

TAD Canister Heat Load (kW)	Floor	Ceiling	North Wall	East Wall	South Wall	West Wall
11.8	177.2	177.0	208.3	182.0	225.4	189.3
18	214.7	213.9	256.4	220.2	277.4	230.7
25	256.8	255.8	307.5	262.7	330.6	276.3
30	286.8	285.7	342.4	292.8	366.0	308.1

Table 83. Peak Concrete Temperatures (°C) in Room 1023, Off-Normal, No Flow, at 30 Days

WP in Tube Heat Load (kW)	Floor	Ceiling	North Wall	East Wall	South Wall	West Wall
9.47	85.3	77.0	88.8	69.1	76.7	77.6
11.8	86.9	78.6	80.2	67.4	77.1	76.6
18	109.1	97.6	98.7	80.9	94.8	94.0
25	132.4	118.4	118.4	96.4	114.1	113.2
30	148.1	132.9	131.9	107.7	127.5	126.5

Table 84. Peak Concrete Temperatures (°F) in Room 1023, Off-Normal, No Flow, at 30 Days

WP in Tube Heat Load (kW)	Floor	Ceiling	North Wall	East Wall	South Wall	West Wall
9.47	185.5	170.6	191.8	156.4	170.1	171.7
11.8	188.4	173.5	176.4	153.4	170.7	169.8
18	228.3	207.6	209.7	177.6	202.7	201.3
25	270.3	245.1	245.1	205.6	237.4	235.7
30	298.5	271.1	269.5	225.9	261.5	259.8

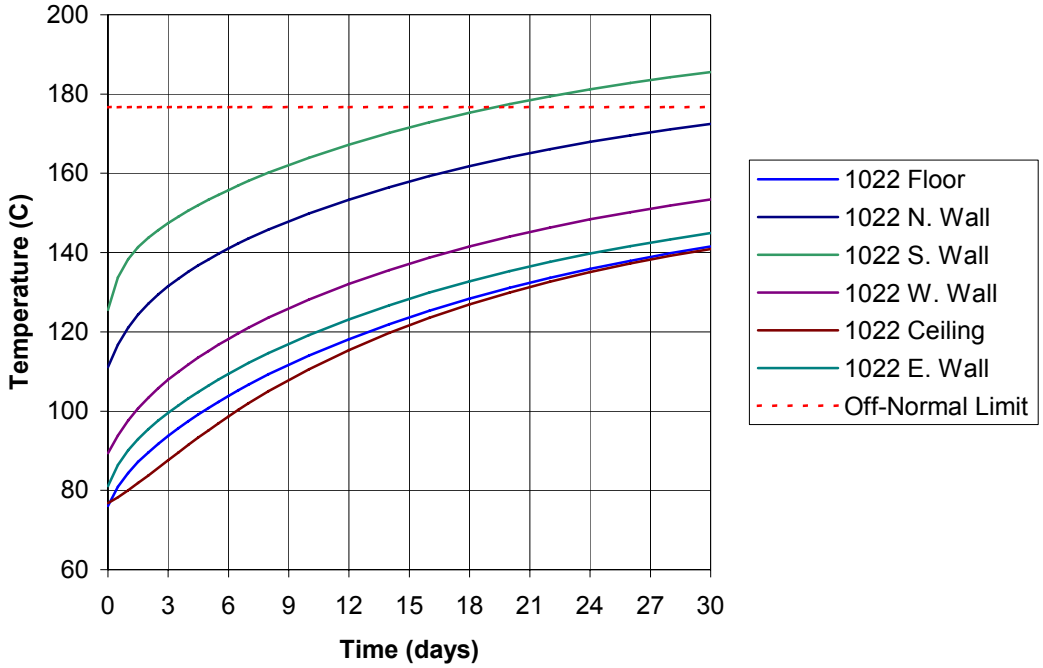

Figure 13. Peak Concrete Temperature Histories (°C) – Room 1022, Off-Normal, No Flow, 30 kW

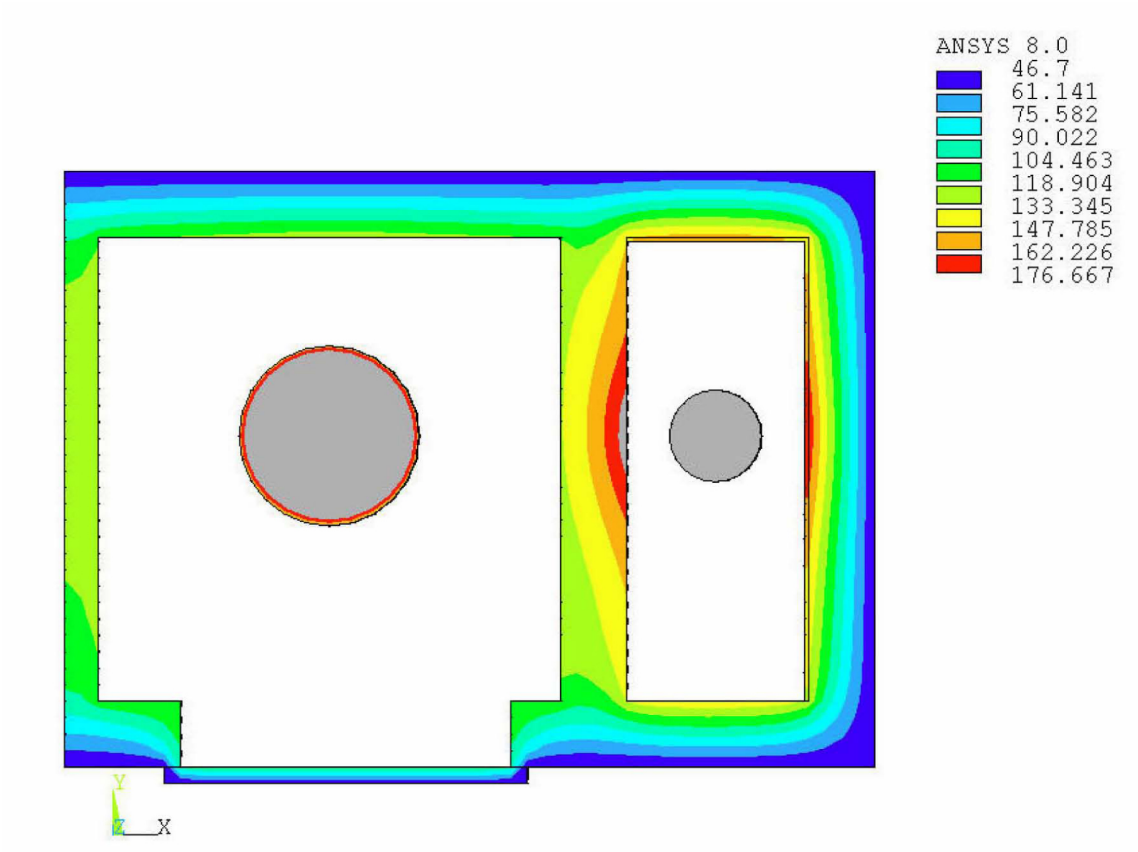

Figure 14. Temperatures (°C) Through Hottest Portion of Rooms 1022 and 1023, Off-Normal, No Flow, 30 kW

7.4.2 3-D ANSYS Results for Rooms 1019 & 1021, Off-Normal, No Flow

Transient 3-D ANSYS analyses were performed up to a time of 30 days for heat load pairs listed in Table 85. Results are presented in Table 86 through Table 92. Off-normal temperature limits are not exceeded in 30 days. Plots showing the concrete temperature histories for all rooms considered are located in Attachment VI.

Table 85. 3-D ANSYS cases for Rooms 1019 & 1021, Off-Normal, No Flow, at 30 Days

Case	Heat Load of WP in Tube In Room 1019 (kW)	Total Heat Load of DOE Canisters In Room 1021 (kW)
1	9.47	9.47
2	11.8	9.47
3	18	9.47
4	25	9.47
5	30	9.47

Table 86. Peak Trolley Tube Surface Temperatures in Room 1019, Off-Normal, No Flow, at 30 Days

WP in Tube Heat Load (kW)	Trolley Tube Surface (°C)	Trolley Tube Surface (°F)
9.47	95.3	203.5
11.8	106.4	223.5
18	132.8	271.1
25	158.6	317.5
30	175.1	347.1

Table 87. Peak DOE SNF Canister Temperatures in Room 1021, Off-Normal, No Flow, at 30 Days

Heat Load In 1019 (kW)	DOE SNF Canister Surface (°C)	DOE SNF Canister Surface (°F)	DOE SNF (°C)	DOE SNF (°F)
9.47	154.0	309.3	212.2	413.9
11.8	154.5	310.1	212.7	414.8
18	155.7	312.2	214.0	417.3
25	157.1	314.7	215.6	420.0
30	158.0	316.5	216.7	422.0

Table 88. Peak DOE HLW Canister Temperatures in Room 1021, Off-Normal, No Flow, at 30 Days

Heat Load In 1019 (kW)	DOE HLW Canister Surface (°C)	DOE HLW Canister Surface (°F)	DOE HLW (°C)	DOE HLW (°F)
9.47	130.2	266.3	172.8	343.1
11.8	130.8	267.4	173.4	344.1
18	132.4	270.3	174.9	346.7
25	134.2	273.6	176.5	349.7
30	135.5	275.9	177.7	351.9

Table 89. Peak Concrete Temperatures (°C) in Room 1019, Off-Normal, No Flow, at 30 Days

WP in Tube Heat Load (kW)	Floor	Ceiling	North Wall	East Wall	South Wall	West Wall
9.47	71.3	65.8	62.7	61.7	65.2	49.4
11.8	78.2	71.4	67.5	66.0	69.4	50.8
18	95.6	85.9	79.7	77.3	80.3	54.7
25	113.7	101.7	92.9	89.6	92.2	59.4
30	125.7	112.5	101.9	98.2	100.5	62.9

Table 90. Peak Concrete Temperatures (°F) in Room 1019, Off-Normal, No Flow, at 30 Days

WP in Tube Heat Load (kW)	Floor	Ceiling	North Wall	East Wall	South Wall	West Wall
9.47	160.4	150.5	144.8	143.0	149.4	120.9
11.8	172.8	160.6	153.4	150.8	156.9	123.4
18	204.1	186.7	175.5	171.1	176.6	130.5
25	236.6	215.0	199.1	193.3	198.0	139.0
30	258.3	234.4	215.3	208.7	212.9	145.2

Table 91. Peak Concrete Temperatures (°C) in Room 1021, Off-Normal, No Flow, at 30 Days

Heat Load In 1019 (kW)	Floor	Ceiling	North Wall	East Wall	South Wall	West Wall
9.47	67.2	67.2	87.5	67.4	79.4	64.3
11.8	68.1	68.0	88.6	68.2	80.1	65.0
18	70.5	69.9	91.4	70.2	82.0	67.0
25	73.2	72.2	94.6	72.6	84.2	69.2
30	75.1	73.8	96.7	74.3	85.7	70.8

Table 92. Peak Concrete Temperatures (°F) in Room 1021, Off-Normal, No Flow, at 30 Days

Heat Load In 1019 (kW)	Floor	Ceiling	North Wall	East Wall	South Wall	West Wall
9.47	153.0	153.0	189.5	153.3	174.9	147.7
11.8	154.6	154.3	191.5	154.7	176.2	149.0
18	159.0	157.9	196.6	158.4	179.6	152.6
25	163.8	161.9	202.2	162.7	183.6	156.6
30	167.3	164.8	206.1	165.7	186.3	159.5

7.4.3 2-D ANSYS Results for WP in Trolley Tube in Room 1023, Off-Normal, No Flow

Comparing Table 80 and Table 86, the peak trolley tube surface temperatures for the off-normal condition with no air flow occur in Room 1023.

7.4.3.1 TAD Waste Package in Trolley Tube, Off-Normal, No Flow

Transient 2-D ANSYS analyses were performed for each heat load with the maximum trolley tube surface temperatures listed in Table 80.

Initially, the thermal conductivity of NS-4-FR ($k_{\text{NS-4-FR}}$) used was 0.646 W/m-K. Results for these cases at 30 days are presented in Table 93 and Table 94. In all cases the peak NS-4-FR temperature exceeds the limit of 148.9 °C. Outer corrosion barrier temperatures for the TAD

Waste Packages above 11.8 kW exceed the 300 °C limit. For the TAD Waste Packages at 25 kW and 30 kW, the peak cladding temperature exceeds the off-normal limit of 570 °C.

Since the NS-4-FR is essentially a thermally insulating material, heat flow from the waste package to the environment, through the trolley tube shielding, is limited. If thermal shunts in the form of a honeycomb of some conductive material (such as aluminum) permeated the NS-4-FR, the effective thermal conductivity of the neutron shielding layer of the trolley tube could be increased, thus allowing greater heat rejection to the environment.

To confirm this, the above cases were rerun using a higher effective thermal conductivity for the NS-4-FR equal to 6.5 W/m-K, which is approximately 10 times the value of pure NS-4-FR. Results for these cases at 30 days are presented in Table 95 and Table 96. At 30 days, with the higher value of $k_{\text{NS-4-FR,}}$ outer corrosion barrier temperatures stay below the 300 °C limit for all cases, and peak cladding temperature stay below the off-normal limit of 570 °C for all cases.

Temperature history plots of the 30-day transient solutions for the TAD Waste Package in the trolley tube are shown in Figure 15 through Figure 18. The plots indicate that, for a TAD Waste Package inside the trolley tube, no thermal limits are exceeded at 11.8 kW. At 18 kW, only the thermal limit of NS-4-FR (148.9 °C) is exceeded, and this occurs after 14 days. At 25 kW and 30 kW, only the thermal limit of NS-4-FR (148.9 °C) is exceeded, occurring immediately.

Table 93. TAD Waste Package in Trolley Tube Peak Temperatures (°C), Off-Normal, No Flow, at 30 Days ($k_{\text{NS-4-FR}}$ = 0.646 W/m-K)

WP Heat Load (kW)	NS-4-FR (k = 6.5)	Tube Inside Surface	WP OCB	WP IV	TAD Canister Surface	TAD Canister Cladding
11.8	207.5	209.9	236.9	259.1	278.9	338.4
18	287.5	291.4	317.9	342.2	365.1	456.0
25	373.6	379.3	403.8	428.5	453.0	579.2
30	433.0	440.2	463.1	487.6	512.7	664.2

Table 94. TAD Waste Package in Trolley Tube Peak Temperatures (°F), Off-Normal, No Flow, at 30 Days ($k_{NS\text{-}4\text{-}FR}$ = 0.646 W/m-K)

WP Heat Load (kW)	NS-4-FR (k = 6.5)	Tube Inside Surface	WP OCB	WP IV	TAD Canister Surface	TAD Canister Cladding
11.8	405.4	409.8	458.4	498.4	533.9	641.0
18	549.5	556.6	604.2	648.0	689.2	852.7
25	704.4	714.8	758.9	803.3	847.3	1074.6
30	811.3	824.4	865.5	909.6	954.8	1227.5

Table 95. TAD Waste Package in Trolley Tube Peak Temperatures (°C), Off-Normal, No Flow, at 30 Days ($k_{NS\text{-}4\text{-}FR}$ = 6.5 W/m-K)

WP Heat Load (kW)	NS-4-FR (k = 6.5)	Tube Inside Surface	WP OCB	WP IV	TAD Canister Surface	TAD Canister Cladding
11.8	122.8	125.2	169.4	198.8	223.0	282.6
18	157.6	161.3	213.0	249.5	280.1	371.1
25	192.6	197.8	254.3	296.4	332.5	459.0
30	215.6	221.8	280.6	325.7	365.0	516.7

Table 96. TAD Waste Package in Trolley Tube Peak Temperatures (°F), Off-Normal, No Flow, at 30 Days ($k_{NS\text{-}4\text{-}FR}$ = 6.5 W/m-K)

WP Heat Load (kW)	NS-4-FR (k = 6.5)	Tube Inside Surface	WP OCB	WP IV	TAD Canister Surface	TAD Canister Cladding
11.8	253.1	257.4	336.9	389.9	433.4	540.6
18	315.8	322.4	415.3	481.0	536.2	700.0
25	378.7	388.0	489.8	565.6	630.6	858.2
30	420.0	431.3	537.0	618.3	689.0	962.1

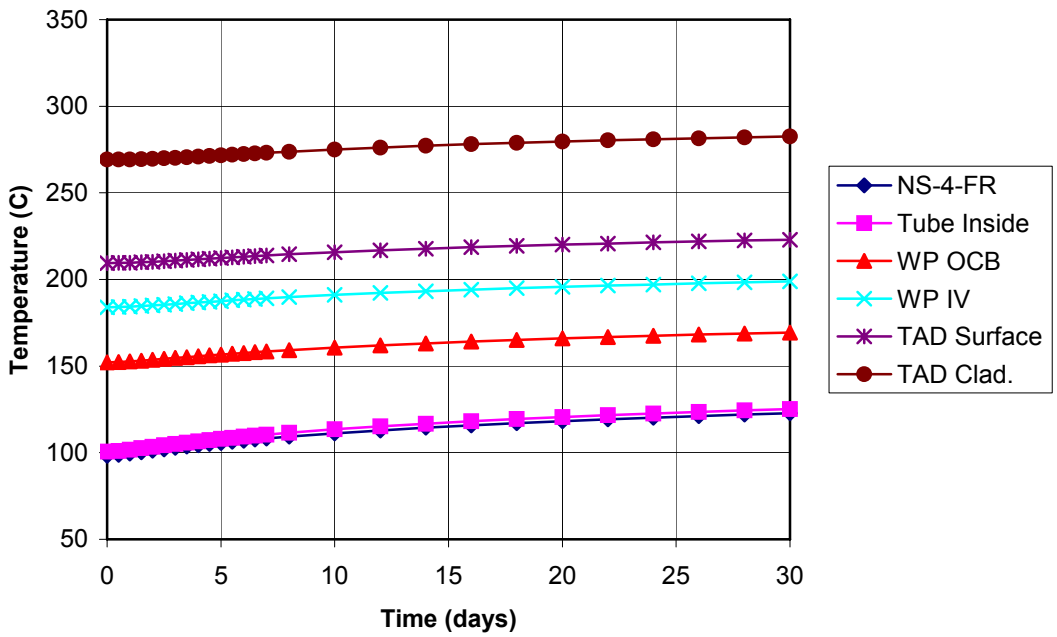

Figure 15. Temperature History (°C) for TAD WP in Trolley Tube (11.8 kW, $k_{NS\text{-}4\text{-}FR}$ = 6.5 W/m-K)

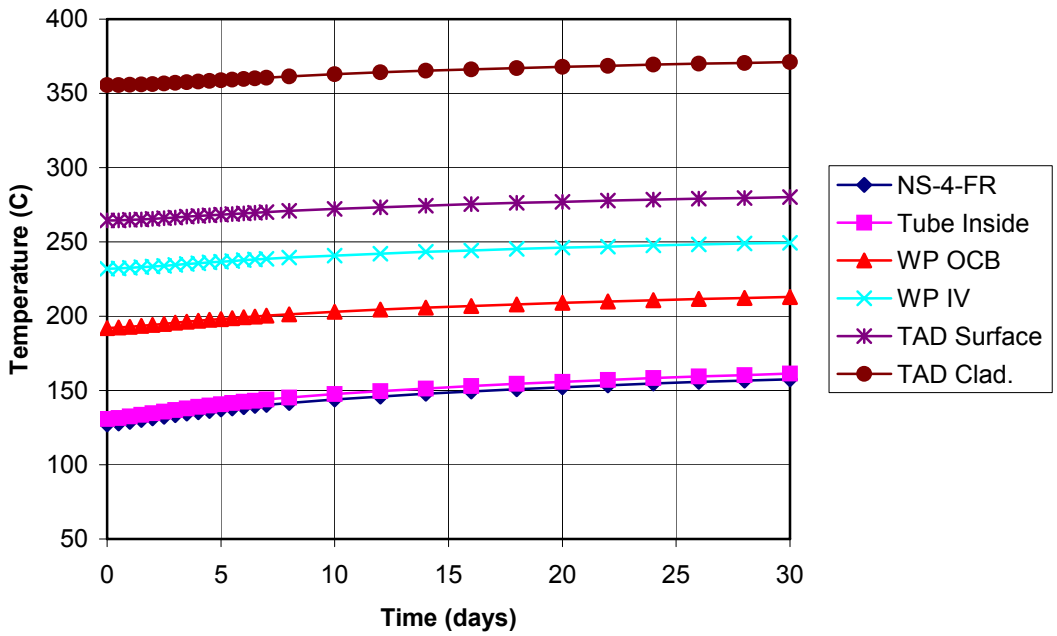

Figure 16. Temperature History (°C) for TAD WP in Trolley Tube (18 kW, $k_{NS\text{-}4\text{-}FR}$ = 6.5 W/m-K)

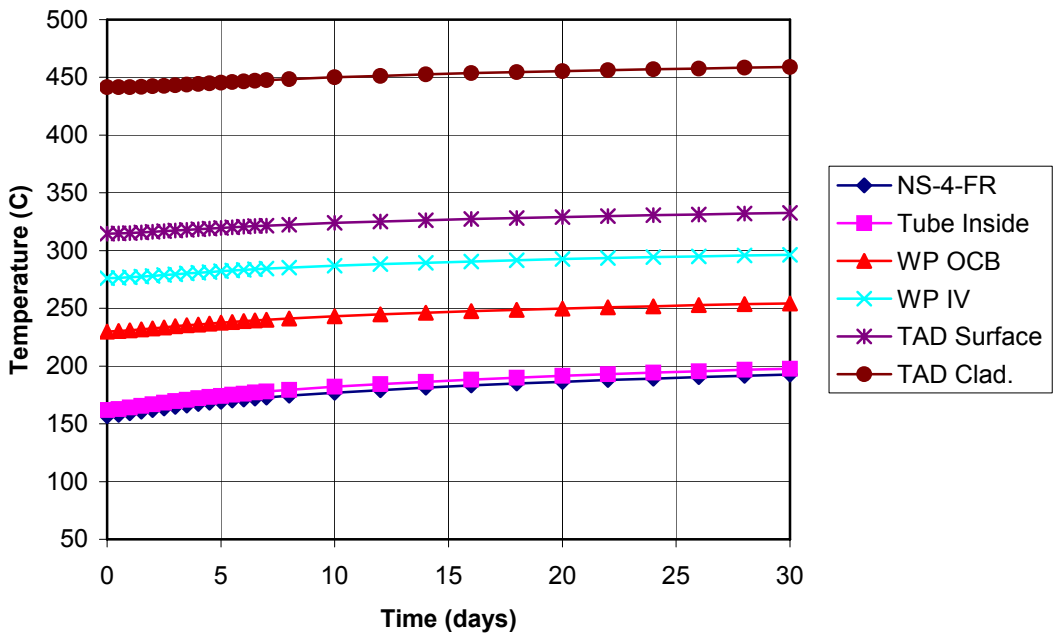

Figure 17. Temperature History (°C) for TAD WP in Trolley Tube (25 kW, $k_{\text{NS-4-FR}}$ = 6.5 W/m-K)

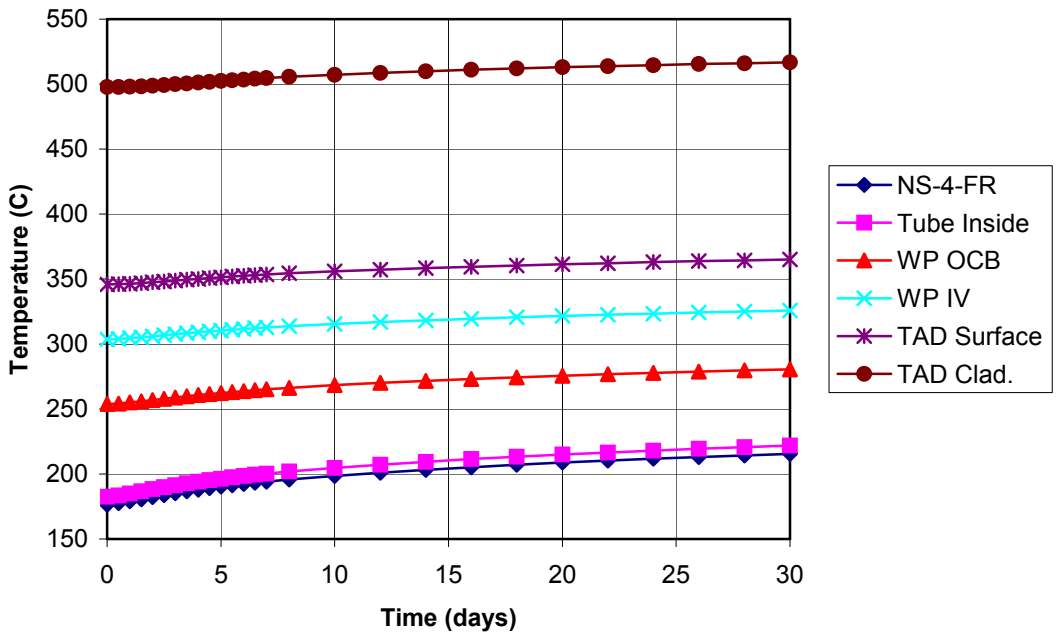

Figure 18. Temperature History (°C) for TAD WP in Trolley Tube (30 kW, $k_{\text{NS-4-FR}}$ = 6.5 W/m-K)

7.4.3.2 5-DHLW/DOE SNF Short WP in Trolley Tube, Off-Normal, No Flow

A steady-state 2-D ANSYS analysis was performed with the maximum trolley tube surface temperature obtained with a 9.47 kW heat load (see Table 80).

Initially, the thermal conductivity of NS-4-FR ($k_{\text{NS-4-FR}}$) used was 0.646 W/m-K. Results for these cases at 30 days are presented in Table 97 through Table 100. At 30 days, the thermal limit of NS-4-FR (148.9 °C) is exceeded.

This case was also rerun using a higher effective thermal conductivity for the NS-4-FR equal to 6.5 W/m-K, which is approximately 10 times the value of pure NS-4-FR. Results for these cases at 30 days are presented in Table 101 through Table 104. At 30 days, the DOE SNF canister exceeds the limit of 315.5 °C for enclosed environments, and thus also exceeds the 148.9 °C limit for open (air) environments.

Table 97. 5-DHLW/DOE SNF Short WP in Trolley Tube Peak Temperatures (°C), Off-Normal, No Flow, at 30 Days ($k_{\text{NS-4-FR}}$ = 0.646 W/m-K)

WP Heat Load (kW)	NS-4-FR (k = 6.5)	Tube Inside Surface	WP OCB	WP IV
9.47	227.7	230.9	259.9	284.9

Table 98. 5-DHLW/DOE SNF Short WP in Trolley Tube Peak Temperatures (°F), Off-Normal, No Flow, at 30 Days ($k_{\text{NS-4-FR}}$ = 0.646 W/m-K)

WP Heat Load (kW)	NS-4-FR (k = 6.5)	Tube Inside Surface	WP OCB	WP IV
9.47	441.8	447.6	499.8	544.9

Table 99. 5-DHLW/DOE SNF Short WP in Trolley Tube Peak Canister Temperatures (°C), Off-Normal, No Flow, at 30 Days ($k_{\text{NS-4-FR}}$ = 0.646 W/m-K)

WP Heat Load (kW)	DOE SNF Canister Surface	DOE SNF	DOE HLW Canister Surface	DOE HLW
9.47	398.8	460.3	387.2	398.6

Table 100. 5-DHLW/DOE SNF Short WP in Trolley Tube Peak Canister Temperatures (°F), Off-Normal, No Flow, at 30 Days ($k_{NS\text{-}4\text{-}FR}$ = 0.646 W/m-K)

WP Heat Load (kW)	DOE SNF Canister Surface	DOE SNF	DOE HLW Canister Surface	DOE HLW
9.47	749.8	860.6	729.0	749.4

Table 101. 5-DHLW/DOE SNF Short WP in Trolley Tube Peak Temperatures (°C), Off-Normal, No Flow, at 30 Days ($k_{NS\text{-}4\text{-}FR}$ = 6.5 W/m-K)

WP Heat Load (kW)	NS-4-FR (k = 6.5)	Tube Inside Surface	WP OCB	WP IV
9.47	118.9	122.0	174.7	209.1

Table 102. 5-DHLW/DOE SNF Short WP in Trolley Tube Peak Temperatures (°F), Off-Normal, No Flow, at 30 Days ($k_{NS\text{-}4\text{-}FR}$ = 6.5 W/m-K)

WP Heat Load (kW)	NS-4-FR (k = 6.5)	Tube Inside Surface	WP OCB	WP IV
9.47	246.0	251.6	346.5	408.4

Table 103. 5-DHLW/DOE SNF Short WP in Trolley Tube Peak Canister Temperatures (°C), Off-Normal, No Flow, at 30 Days ($k_{NS\text{-}4\text{-}FR}$ = 6.5 W/m-K)

WP Heat Load (kW)	DOE SNF Canister Surface	DOE SNF	DOE HLW Canister Surface	DOE HLW
9.47	344.7	406.3	330.4	340.1

Table 104. 5-DHLW/DOE SNF Short WP in Trolley Tube Peak Canister Temperatures (°F), Off-Normal, No Flow, at 30 Days ($k_{NS\text{-}4\text{-}FR}$ = 6.5 W/m-K)

WP Heat Load (kW)	DOE SNF Canister Surface	DOE SNF	DOE HLW Canister Surface	DOE HLW
9.47	652.4	763.3	626.7	644.1

7.5 SUMMARY AND CONCLUSIONS

7.5.1 Concrete Temperatures

In all cases, including the normal operations case, there are concrete hot spots. Thermal shields need to be designed or the concrete needs to be sacrificial.

Under normal operating conditions (see Table 39 through Table 42 and Table 47 through Table 50), the concrete normal temperature limit of 150 ºF (~66 ºC) is not exceeded in any of the modeled rooms with heat loads of 11.8 kW and 18 kW. The concrete normal temperature limit of 150 ºF (~66 ºC) is exceeded in Room 1022 with heat loads of 25 kW and 30 kW. Concrete thermal limits for normal conditions are exceeded by a small amount in Room 1023 with a 30 kW heat load. Concrete hot spots in walls extend more than halfway through. Hot spots in ceilings are very small. Although the ceilings were modeled as solid concrete, in reality, the slide gates will occupy these locations.

Under the off-normal condition with reduced flow (ITS exhaust) (see Table 60 through Table 63 and Table 68 through Table 71), the concrete off-normal temperature limit of 350 ºF (~177 ºC) is not exceeded in any of the modeled rooms with heat loads of 11.8 kW, 18 kW, and 25 kW. The concrete off-normal temperature limit of 350 ºF (~177 ºC) is exceeded in Room 1022 with a 30 kW heat load. Hot spots do not extend very far into the walls.

Under the off-normal condition with no flow, at 30 days (see Table 81 through Table 84 and Table 89 through Table 92), the concrete off-normal temperature limit of 350 ºF (~177 ºC) is not exceeded in any of the modeled rooms with heat loads of 11.8 kW, 18 kW, and 25 kW. The concrete off-normal temperature limit of 350 ºF (~177 ºC) is exceeded in Room 1022 with a 30 kW heat load after 19 days. Hot spots do not extend very far into the walls.

The use of the homogeneous cylinder representing the waste package in the trolley tube in the cask unloading rooms can be thought of as a surrogate for the variety of shipping casks that are expected to come to the CRCF. Some of these casks are not yet designed, but all will have to be certified by the NRC and demonstrate that they satisfy the applicable temperature limits for their waste forms. The thermal effects on the concrete are not dependent on the internal cask details.

7.5.2 Trolley Tube Outer Surface Temperatures

Peak trolley tube outer surface temperatures for the normal operating conditions are given in Table 38 and Table 44.

Peak trolley tube outer surface temperatures for the off-normal condition with reduced flow (ITS exhaust) are given in Table 59 and Table 65.

Peak trolley tube outer surface temperatures for the off-normal condition with no flow are given in Table 80 and Table 86.

7.5.3 Neutron Shielding Temperatures of the Waste Package Transfer Trolley Shielded Enclosure

Section 7.4.3.1 compared waste package and trolley tube temperatures using two different values of thermal conductivity for the neutron shielding layer ($k_{\text{NS-4-FR}}$): one equal to that of pure NS-4-FR and one equal to approximately 10 times the value of pure NS-4-FR, which represents the effect of thermal shunts through the neutron shielding. Based on these results, it is concluded that thermal shunts will absolutely be needed or thermal limits of the waste package, including at the outer corrosion barrier, will be exceeded.

Under normal operating conditions, with the thermal shunts, the temperature limit of NS-4-FR is not exceeded (see Section 7.2.3).

Under the off-normal condition with reduced flow (ITS exhaust), with the thermal shunts, in order to keep the temperature of NS-4-FR below the limit of 148.9 °C, the maximum waste package heat load inside the tube is 24.9 kW (see Section 7.3.3).

Under the off-normal condition with no flow, with the thermal shunts, an 18 kW waste package exceeds the thermal limit of NS-4-FR (148.9 °C) after 14 days, and a 25 kW waste package and a 30 kW waste package exceed the thermal limit of NS-4-FR immediately (see Section 7.4.3).

7.5.4 TAD Waste Package Temperatures

Under normal operating conditions, with the thermal shunts, the maximum heat load the TAD Waste Package can have inside the trolley tube without exceeding cladding temperature limits is 23 kW (see Section 7.2.3.1).

Under the off-normal condition with reduced flow (ITS exhaust), with the thermal shunts, off-normal temperature limits of the TAD canister cladding and the waste package outer corrosion barrier are not exceeded (see Section 7.3.3.1).

Under the off-normal condition with no flow, with the thermal shunts, at 30 days, outer corrosion barrier temperatures stay below the 300 °C limit for all cases, and peak cladding temperature stay below the off-normal limit of 570 °C for all cases (see Section 7.4.3.1).

7.5.5 5-DHLW/DOE SNF Short Waste Package Temperatures

Under normal operating conditions, with the thermal shunts, for the case of a fully loaded 5-DHLW/DOE SNF Short Waste Package (1 DOE SNF canister @ 1.97 kW + 5 DOE HLW canisters @ 1.5 kW each = 9.47 kW), both the DOE SNF and the DOE SNF canister exceed thermal limits. In order to examine at what heat loads the DOE SNF and the DOE SNF canister temperature limits are not exceeded, additional analyses were performed with lower heat loads (see Section 7.2.3.2).

Under normal operating conditions, with the thermal shunts, for the case of a 5-DHLW/DOE SNF Short Waste Package at 6.97 kW (1 DOE SNF canister @ 1.97 kW + 5 DOE HLW canisters @ 1.0 kW each = 6.97 kW), the DOE SNF is below the limit of 350 °C. The DOE SNF canister is below the limit of 315.5 °C for enclosed environments, but exceeds the 148.9 °C limit for open (air) environments.

Under normal operating conditions, with the thermal shunts, for the case of a 5-DHLW/DOE SNF Short Waste Package at 1.97 kW (1 DOE SNF canister @ 1.97 kW + 5 DOE HLW canisters @ 0 kW each = 1.97 kW) the DOE SNF is below the limit of 350 °C. The DOE SNF canister is below the limit of 315.5 °C for enclosed environments, but exceeds the 148.9 °C limit for open (air) environments.

Under normal operating conditions, with the thermal shunts, for the case of a 5-DHLW/DOE SNF Short Waste Package at 1.5 kW (1 DOE SNF canister @ 1.5 kW + 5 DOE HLW canisters @ 0 kW each = 1.5 kW), the DOE SNF is below the limit of 350 °C, and the DOE SNF canister is below the 148.9 °C limit for open (air) environments.

Under the off-normal condition with reduced flow (ITS exhaust), with the thermal shunts, with the maximum heat load of 9.47 kW, the DOE SNF canister exceeds the limit of 315.5 °C for enclosed environments, and thus also exceeds the 148.9 °C limit for open (air) environments (see Section 7.3.3.2).

Under the off-normal condition with no flow, with the thermal shunts, with the maximum heat load of 9.47 kW, at 30 days, the DOE SNF canister exceeds the limit of 315.5 °C for enclosed environments, and thus also exceeds the 148.9 °C limit for open (air) environments (see Section 7.4.3.2).

Therefore, it is concluded that 5-DHLW/DOE SNF Short Waste Package should not be loaded to the maximum heat load of 9.47 kW. However, a single canister at maximum heat is acceptable. When canisters in the 5-DHLW/DOE SNF Short Waste Package exceed temperature limits, lifting operations should not be permitted until canisters are cooled.

7.5.6 TAD Canister Temperatures in Staging Area (Room 1022)

Under normal operating conditions, and for all heat loads considered, the SNF in the TAD canister never exceeds the normal temperature limit of 400 ºC (see Table 37).

Under the off-normal condition with reduced flow (ITS exhaust), and for all heat loads considered, the SNF in the TAD canister never exceeds the off-normal temperature limit of 570 ºC (see Table 58).

Under the off-normal condition with no flow, and for all heat loads considered, the SNF in the TAD canister never exceeds the off-normal temperature limit of 570 ºC (see Table 79).

7.5.7 DOE Canister Temperatures in Staging Area (Room 1021)

Under normal operating conditions, the DOE SNF canister wall temperature never exceeds the limit of 148.9 °C in open (air) environments. The DOE SNF never exceeds the limit of 350 °C (see Table 45). The vitrified glass in the HLW canisters never exceeds the limit of 400 °C (see Table 46).

Under the off-normal condition with reduced flow (ITS exhaust), the DOE SNF canister wall temperature exceeds the limit of 148.9 °C in open (air) environments (see Table 66); therefore, lifting operations should not be permitted until canisters are cooled. The DOE SNF never exceeds the limit of 350 °C. The vitrified glass in the HLW canisters never exceeds the limit of 400 °C (see Table 67).

Under the off-normal condition with no flow, at 30 days, the DOE SNF canister wall temperature exceeds the limit of 148.9 °C in open (air) environments (see Table 87); therefore, lifting operations should not be permitted until canisters are cooled. The DOE SNF never exceeds the limit of 350 °C. The vitrified glass in the HLW canisters never exceeds the limit of 400 °C (see Table 88).

ATTACHMENT I

AVERAGE AIR TEMPERATURES FROM FLUENT OFF-NORMAL CASES

In the 3-D FLUENT analyses of the off-normal condition with reduced airflow (ITS Exhaust), two of the rooms modeled, Rooms 1021 and 1022, had no forced air flow. Average air temperatures from those cases are presented in Table 105.

Table 105. Average air temperatures in Room 1021 and 1022, Off-Normal

Room	Air Flow Rate (CFM)	Heat Load (kW)	Average Air Temperature (°C)	Average Air Temperature (°F)
1019	1000	30	74	164
1021	0	9.47	85	186
1022	0	11.8	94	201
1022	0	18	117	242
1022	0	25	142	287
1022	0	30	159	319
1023	1000	11.8	60	141
1023	1000	18	67	153
1023	1000	25	75	168
1023	1000	30	81	178

ATTACHMENT II

E-MAIL REGARDING TROLLEY TUBE SHIELDING THICKNESSES

This e-mail, dated 4/5/2007, is from Norman Kahler of BSC Nuclear & Radiological Group to Delwin Mecham of BSC Thermal/Structural Analysis Group providing preliminary shielding material thicknesses of the trolley tube.

Delwin Mecham
04/05/2007 03:32 PM

To: Timothy deBues/YM/RWDOE@CRWMS
cc:
Subject: Fw: WP Tilt Trolley Shield Thickness

LSN: Not Relevant- Not Privileged
User Filed as: Excl/AdminMgmt-14-4/QA:N/A

fyi ... a little different than we have been told eh?

---------- Forwarded by Delwin Mecham/YM/RWDOE on 04/05/2007 03:34 PM ----------

Norman Kahler
04/05/2007 12:47 PM

To: Delwin Mecham/YM/RWDOE@CRWMS
cc:
Subject: WP Tilt Trolley Shield Thickness

LSN: Not Relevant- Not Privileged
User Filed as: Excl/AdminMgmt-14-4/QA:N/A

Del,

Although, Tanya is still running it. To get the contact surface dose rate to 100mrem/hr with the max source term it appears that we will need ~7.5in Borated Poly and ~11.5in of Steel. As I told you today, I will be meeting with them on Friday to discuss the results. The MCNP models are still running so this result is preliminary.

Norman

ATTACHMENT III

E-MAIL REGARDING CRCF AIR FLOW RATES

This e-mail, dated 7/31/2007, is from Greg Gould of BSC Mechanical HVAC Group to Timothy deBues of BSC Thermal/Structural Analysis Group confirming the air flow rates to be used in this calculation. The air flow rates were provided in the file attached to the e-mail (*CRCF Thermal Analysis Airflows(07312007).doc*), which is also included here.

Greg Gould
07/31/2007 04:04 PM

To: Timothy deBues/YM/RWDOE@CRWMS
cc: Steve Ployhar/YM/RWDOE@CRWMS, Orlando Asuncion/YM/RWDOE@CRWMS, Hadi Jalali/YM/RWDOE@CRWMS, Tracy Johnson/YM/RWDOE, Delwin Mecham/YM/RWDOE@CRWMS
Subject: Thermal Analysis HVAC Airflows

LSN: Not Relevant- Not Privileged
User Filed as: Excl/AdminMgmt-14-4/QA:N/A

Tim,

As I told you on the phone, I have revised the numbers by rounding down to the nearest 500 cfm to make the inputs easier to handle and a bit more conservative. I have also taken the "Check Copy" graphic off the document.

So, here are the airflow that you can use in your calculations.

CRCF Thermal Analysis Airflows(07312007).doc

Thanks,

Greg
1-7488

CRCF Thermal Analysis Airflows

1. Normal operating conditions with a "minimum building air leakage rate" (i.e. 0 wind velocity outside without an additional factor of safety):

There is a total airflow exhausted from Room 1023 of 3,600 cfm.
3,500 cfm is cascaded from Room 1026
100 cfm is cascaded from Room 2004

[The airflow value cascaded from Room 1026 is determined from in-progress VFDs using the sum of the outside air into AHU 060-VCT0-AHU-00005 (5,270 cfm) and the inleakage rate associated with a 0 mph ambient wind speed from p. 45 of 060-M9C-VCT0-00100-000-00A (2,158 cfm). The total O.A. makeup and inleakage (5,270 + 2,158 = 7,428 cfm) is divided by two to determine the flow rate into Rooms 1023 and 1024 (7428 cfm/2 = 3714 cfm). An additional 50 cfm comes from the corridors for a total airflow rate of 3,764 cfm, use 3500 cfm, cascaded from Room 1026. The value of 100 cfm cascaded from Room 2004 comes from the in-progress VFDs.]

There is a total airflow exhausted from Room 1024 of 3,600 cfm.
3,500 cfm is cascaded from Room 1026
100 cfm is cascaded from Room 2004

[The airflow value cascaded from Room 1026 is determined from in-progress VFDs using the sum of the outside air into AHU 060-VCT0-AHU-00005 (5,270 cfm) and the inleakage rate associated with a 0 mph ambient wind speed from p. 45 of 060-M9C-VCT0-00100-000-00A (2,158 cfm). The total O.A. makeup and inleakage (5,270 + 2,158 = 7,428 cfm) is divided by two to determine the flow rate into Rooms 1023 and 1024 (7428 cfm/2 = 3714 cfm). An additional 50 cfm comes from the corridors for a total airflow rate of 3,764 cfm, use 3,500 cfm, cascaded from Room 1026. The value of 100 cfm cascaded from Room 2004 comes from the in-progress VFDs.]

There is a total airflow exhausted from Room 1018 of 5,100 cfm
5,000 cfm is cascaded from Room 1015
100 cfm is cascaded from Room 2004 when the waste package is located under the slide gate. 0 cfm otherwise.
100 cfm is cascaded from Room 2007 when the waste package is being welded. 0 cfm otherwise.

[The airflow value cascaded from Room 1015 is determined from in-progress VFDs using the sum of the outside air into AHU 060-VCT0-AHU-00013 (7,720 cfm) and the inleakage rate associated with a 0 mph ambient wind speed from p. 44 of 060-M9C-VCT0-00100-000-00A (2,255 cfm). The total O.A. makeup and inleakage (7,720 + 2,255 = 9,975 cfm) is divided by two to determine the flow rate into Rooms 1023 and 1024 (9,975 cfm/2 = 4,988 cfm). An additional 50 cfm comes from the corridors for a total airflow rate of 5,038 cfm, use 5,000 cfm, cascaded from Room 1015. The value of 100 cfm cascaded from Room 2007 during welding comes from the in-progress VFDs. The value of 100 cfm cascaded from Room 2004 is assumed to occur when the waste package is being loaded.]

There is a total airflow exhausted from Room 1019 of 5,100 cfm
5,000 cfm is cascaded from Room 1015
100 cfm is cascaded from Room 2004 when the waste package is located under the slide gate. 0 cfm otherwise.
100 cfm is cascaded from Room 2007 when the waste package is being welded. 0 cfm otherwise.

[The airflow value cascaded from Room 1015 is determined from in-progress VFDs using the sum of the outside air into AHU 060-VCT0-AHU-00013 (7,720 cfm) and the inleakage rate associated with a 0 mph ambient wind speed from p. 44 of 060-M9C-VCT0-00100-000-00A (2,255 cfm). The total O.A. makeup and inleakage (7,720 + 2,255 = 9,975 cfm) is divided by two to determine the flow rate into Rooms 1023 and 1024 (9,975 cfm/2 = 4,988 cfm). An additional 50 cfm comes from the corridors for a total airflow rate of 5,038 cfm, use 5,000 cfm, cascaded from Room 1015. The value of 100 cfm cascaded from Room 2007 during welding comes from the in-progress VFDs. The value of 100 cfm cascaded from Room 2004 is assumed to occur when the waste package is being loaded.]

There is a total airflow exhausted from Room 1017 of 2,000 cfm
2,000 cfm is provided by air handling unit 060-VCT0-AHU-00011 and is delivered at an approximate temperature of 51°F.

[The value is from the in-progress VFD: 2,140 cfm rounded down to nearest 500 cfm. Use 2,000 cfm.]

There is a total airflow exhausted from Room 1021 of 500 cfm
500 cfm is provided by air handling unit 060-VCT0-AHU-00011 and is delivered at an approximate temperature of 51°F.

[The values are from the in-progress VFD: 770 cfm rounded down to nearest 500 cfm. Use 500 cfm.]

There is a total airflow exhausted from Room 1022 of 2,000 cfm
2,000 cfm is provided by air handling unit 060-VCT0-AHU-00011 and is delivered at an approximate temperature of 51°F.

[The values are from the in-progress VFD: 2,140 cfm rounded down to nearest 500 cfm. Use 2,000 cfm]

There is a total airflow exhausted from Room 1025 of 500 cfm
500 cfm is provided by air handling unit 060-VCT0-AHU-00011 and is delivered at an approximate temperature of 51°F.

[The values are from the in-progress VFD: 770 cfm rounded down to nearest 500 cfm. Use 500 cfm.]]

2. Off-normal loss of power, but ITS Exhaust Fan runs. (0 outdoor wind value)

There is a total airflow exhausted from Room 1023 of 1,000 cfm.
1,000 cfm is cascaded from Room 1026
0 cfm is cascaded form Room 2004

[The airflow value cascaded from Room 1026 is determined from the inleakage rate associated with a 0 mph ambient wind speed from p. 45 of 060-M9C-VCT0-00100-000-00A (2,158 cfm). The inleakage rate is divided by two to determine the flow rate into Rooms 1023 and 1024 (2158 cfm/2 = 1079 cfm). An additional 50 cfm comes from the corridors for a total airflow rate of 1,129 cfm, use 1,000 cfm, cascaded from Room 1026.]

There is a total airflow exhausted from Room 1024 of 1,000 cfm.
1,000 cfm is cascaded from Room 1026
0 cfm is cascaded form Room 2004

[The airflow value cascaded from Room 1026 is determined from the inleakage rate associated with a 0 mph ambient wind speed from p. 45 of 060-M9C-VCT0-00100-000-00A (2,158 cfm). The inleakage rate is divided by two to determine the flow rate into Rooms 1023 and 1024 (2158 cfm/2 = 1079 cfm). An additional 50 cfm comes from the corridors for a total airflow rate of 1,129 cfm, use 1,000 cfm, cascaded from Room 1026.]

There is a total airflow exhausted from Room 1018 of 1,000 cfm
1,000 cfm is cascaded from Room 1015
0 cfm is cascaded from Room 2004
0 cfm is cascaded from Room 2007

[The airflow value cascaded from Room 1015 is determined from the inleakage rate associated with a 0 mph ambient wind speed from p. 44 of 060-M9C-VCT0-00100-000-00A (2,252 cfm). The inleakage rate is divided by two to determine the flow rate into Rooms 1023 and 1024 (2,252 cfm/2 = 1,126 cfm). An additional 50 cfm comes from the corridors for a total airflow rate of 1,176 cfm, use 1,000 cfm, cascaded from Room 1015.]

There is a total airflow exhausted from Room 1019 of 1,000 cfm
1,000 cfm is cascaded from Room 1015
0 cfm is cascaded from Room 2004
0 cfm is cascaded from Room 2007

[The airflow value cascaded from Room 1015 is determined from the inleakage rate associated with a 0 mph ambient wind speed from p. 44 of 060-M9C-VCT0-00100-000-00A (2,252 cfm). The inleakage rate is divided by two to determine the flow rate into Rooms 1023 and 1024 (2,252 cfm/2 = 1,126 cfm) An additional 50 cfm comes from the corridors for a total airflow rate of 1,176 cfm, use 1,000 cfm, cascaded from Room 1015.]

There is a total airflow exhausted from Room 1017 of 0 cfm

There is a total airflow exhausted from Room 1021 of 0 cfm

There is a total airflow exhausted from Room 1022 of 0 cfm

There is a total airflow exhausted from Room 1025 of 0 cfm

3. Off-normal with no airflow.

Zero airflow for all rooms.

3 of 3

ATTACHMENT IV

FILE LISTING FOR ATTACHMENT V

DVD 1 of 2

```
Volume in drive D is 070927_0922
 Volume Serial Number is 3701-D348

 Directory of D:\

09/26/2007  06:49a              80,764 air_props_105F.xmcd
09/26/2007  06:49a              81,007 air_props_116F.xmcd
09/26/2007  06:49a              80,575 air_props_51F.xmcd
09/26/2007  06:49a              80,752 air_props_79F.xmcd
09/11/2007  09:40a              54,354 compare_room_heat_loads.xmcd
09/22/2007  06:57a      <DIR>          CRCF_2D_FROM_FLUENT3D_NORMAL
09/22/2007  06:56a      <DIR>          CRCF_3D_FLUENT_NORMAL
09/19/2007  02:49p             189,721 CRCF_flow_rates.xmcd
09/22/2007  08:46a      <DIR>          CRCF_FLUENT_MESHES
09/24/2007  08:11a             178,176 CRCF_results_summary.xls
09/19/2007  02:11p              44,037 DOE_SNF_active_length.xmcd
09/25/2007  03:31p             126,837 heat_gen.xmcd
09/25/2007  03:30p              28,785 HLW_active_length.xmcd
09/19/2007  03:25p              24,042 NS-4-FR_thermal_properties.xmcd
09/19/2007  02:03p              25,365 TAD_WP_density.xmcd
              12 File(s)        994,415 bytes

 Directory of D:\CRCF_2D_FROM_FLUENT3D_NORMAL

09/22/2007  06:57a      <DIR>          .
09/27/2007  09:22a      <DIR>          ..
09/22/2007  06:46a      <DIR>          5PACK_WP_NORM_0680_K_6p5
09/22/2007  06:44a      <DIR>          5PACK_WP_NORM_1500_K_6p5
09/22/2007  06:45a      <DIR>          5PACK_WP_NORM_1970_K_6p5
09/22/2007  06:45a      <DIR>          5PACK_WP_NORM_6970_K_6p5
09/22/2007  06:45a      <DIR>          5PACK_WP_NORM_9470_K_0p646
09/22/2007  06:43a      <DIR>          5PACK_WP_NORM_9470_K_6p5
09/22/2007  06:47a      <DIR>          TAD_WP_NORM_11800_K_6p5
09/22/2007  06:47a      <DIR>          TAD_WP_NORM_18000_K_6p5
09/22/2007  06:47a      <DIR>          TAD_WP_NORM_23000_K_6p5
09/22/2007  06:48a      <DIR>          TAD_WP_NORM_25000_K_6p5
09/22/2007  06:48a      <DIR>          TAD_WP_NORM_30000_K_6p5
               0 File(s)              0 bytes

 Directory of D:\CRCF_2D_FROM_FLUENT3D_NORMAL\5PACK_WP_NORM_0680_K_6p5

09/22/2007  06:46a      <DIR>          .
09/22/2007  06:57a      <DIR>          ..
09/06/2007  08:38a               9,328 5pack_in_tube_matprops.dat
09/21/2007  10:34a              79,036 5pack_tube_ss.inp
09/21/2007  10:37a             425,744 5pack_tube_ss.out
09/21/2007  10:37a               1,273 5pack_tube_ss.parm
09/07/2007  10:38a                 215 runfile
               5 File(s)        515,596 bytes

 Directory of D:\CRCF_2D_FROM_FLUENT3D_NORMAL\5PACK_WP_NORM_1500_K_6p5
```

```
09/22/2007  06:44a      <DIR>          .
09/22/2007  06:57a      <DIR>          ..
09/06/2007  08:38a               9,328 5pack_in_tube_matprops.dat
09/21/2007  10:43a              79,038 5pack_tube_ss.inp
09/21/2007  10:46a             425,887 5pack_tube_ss.out
09/21/2007  10:46a               1,273 5pack_tube_ss.parm
09/07/2007  10:38a                 215 runfile
               5 File(s)        515,741 bytes

 Directory of D:\CRCF_2D_FROM_FLUENT3D_NORMAL\5PACK_WP_NORM_1970_K_6p5

09/22/2007  06:45a      <DIR>          .
09/22/2007  06:57a      <DIR>          ..
09/06/2007  08:38a               9,328 5pack_in_tube_matprops.dat
09/09/2007  11:09a              79,038 5pack_tube_ss.inp
09/09/2007  11:11a             425,810 5pack_tube_ss.out
09/09/2007  11:11a               1,273 5pack_tube_ss.parm
09/07/2007  10:38a                 215 runfile
               5 File(s)        515,664 bytes

 Directory of D:\CRCF_2D_FROM_FLUENT3D_NORMAL\5PACK_WP_NORM_6970_K_6p5

09/22/2007  06:45a      <DIR>          .
09/22/2007  06:57a      <DIR>          ..
09/06/2007  08:38a               9,328 5pack_in_tube_matprops.dat
09/07/2007  02:25p              79,056 5pack_tube_ss.inp
09/07/2007  02:27p             425,531 5pack_tube_ss.out
09/07/2007  02:27p               1,273 5pack_tube_ss.parm
09/07/2007  10:38a                 215 runfile
               5 File(s)        515,403 bytes

 Directory of D:\CRCF_2D_FROM_FLUENT3D_NORMAL\5PACK_WP_NORM_9470_K_0p646

09/22/2007  06:45a      <DIR>          .
09/22/2007  06:57a      <DIR>          ..
07/16/2007  02:22p               9,330 5pack_in_tube_matprops.dat
09/07/2007  12:51p              79,046 5pack_tube_ss.inp
09/07/2007  12:55p             426,245 5pack_tube_ss.out
09/07/2007  12:55p               1,273 5pack_tube_ss.parm
09/07/2007  10:36a                 215 runfile
               5 File(s)        516,109 bytes

 Directory of D:\CRCF_2D_FROM_FLUENT3D_NORMAL\5PACK_WP_NORM_9470_K_6p5

09/22/2007  06:43a      <DIR>          .
09/22/2007  06:57a      <DIR>          ..
09/06/2007  08:38a               9,328 5pack_in_tube_matprops.dat
09/07/2007  12:52p              79,046 5pack_tube_ss.inp
09/07/2007  12:57p             425,665 5pack_tube_ss.out
09/07/2007  12:57p               1,273 5pack_tube_ss.parm
09/07/2007  10:38a                 215 runfile
               5 File(s)        515,527 bytes

 Directory of D:\CRCF_2D_FROM_FLUENT3D_NORMAL\TAD_WP_NORM_11800_K_6p5

09/22/2007  06:47a      <DIR>          .
09/22/2007  06:57a      <DIR>          ..
09/07/2007  10:25a                 215 runfile
07/19/2007  01:30p               8,553 TADWP_in_tube_matprops.dat
09/10/2007  07:04a              22,584 tadwp_tube_ss.inp
09/10/2007  07:08a             150,339 tadwp_tube_ss.out
09/10/2007  07:08a               1,097 tadwp_tube_ss.parm
               5 File(s)        182,788 bytes
```

```
 Directory of D:\CRCF_2D_FROM_FLUENT3D_NORMAL\TAD_WP_NORM_18000_K_6p5

09/22/2007  06:47a      <DIR>          .
09/22/2007  06:57a      <DIR>          ..
09/07/2007  10:25a                 215 runfile
07/19/2007  01:30p               8,553 TADWP_in_tube_matprops.dat
09/10/2007  07:05a              22,584 tadwp_tube_ss.inp
09/10/2007  07:08a             150,339 tadwp_tube_ss.out
09/10/2007  07:08a               1,097 tadwp_tube_ss.parm
               5 File(s)        182,788 bytes

 Directory of D:\CRCF_2D_FROM_FLUENT3D_NORMAL\TAD_WP_NORM_23000_K_6p5

09/22/2007  06:47a      <DIR>          .
09/22/2007  06:57a      <DIR>          ..
09/07/2007  10:25a                 215 runfile
07/19/2007  01:30p               8,553 TADWP_in_tube_matprops.dat
09/10/2007  09:14a              22,584 tadwp_tube_ss.inp
09/10/2007  09:14a             150,481 tadwp_tube_ss.out
09/10/2007  09:14a               1,097 tadwp_tube_ss.parm
               5 File(s)        182,930 bytes

 Directory of D:\CRCF_2D_FROM_FLUENT3D_NORMAL\TAD_WP_NORM_25000_K_6p5

09/22/2007  06:48a      <DIR>          .
09/22/2007  06:57a      <DIR>          ..
09/07/2007  10:25a                 215 runfile
07/19/2007  01:30p               8,553 TADWP_in_tube_matprops.dat
09/10/2007  07:06a              22,584 tadwp_tube_ss.inp
09/10/2007  07:09a             150,481 tadwp_tube_ss.out
09/10/2007  07:09a               1,097 tadwp_tube_ss.parm
               5 File(s)        182,930 bytes

 Directory of D:\CRCF_2D_FROM_FLUENT3D_NORMAL\TAD_WP_NORM_30000_K_6p5

09/22/2007  06:48a      <DIR>          .
09/22/2007  06:57a      <DIR>          ..
09/07/2007  10:25a                 215 runfile
07/19/2007  01:30p               8,553 TADWP_in_tube_matprops.dat
09/10/2007  07:06a              22,585 tadwp_tube_ss.inp
09/10/2007  07:09a             150,485 tadwp_tube_ss.out
09/10/2007  07:09a               1,097 tadwp_tube_ss.parm
               5 File(s)        182,935 bytes

 Directory of D:\CRCF_3D_FLUENT_NORMAL

09/22/2007  06:56a      <DIR>          .
09/27/2007  09:22a      <DIR>          ..
09/21/2007  01:54p      <DIR>          CRCF_1019-1021
09/21/2007  02:31p      <DIR>          CRCF_1022-1023
               0 File(s)              0 bytes

 Directory of D:\CRCF_3D_FLUENT_NORMAL\CRCF_1019-1021

09/21/2007  01:54p      <DIR>          .
09/22/2007  06:56a      <DIR>          ..
09/21/2007  01:26p      <DIR>          09470
09/21/2007  01:28p      <DIR>          11800
09/21/2007  01:49p      <DIR>          18000
09/21/2007  01:54p      <DIR>          25000
09/21/2007  01:57p      <DIR>          30000
09/21/2007  01:23p      <DIR>          FLOW
```

```
08/27/2007  03:47p          53,411,565 fluent_1019-1021_mesh29.msh
               1 File(s)     53,411,565 bytes

 Directory of D:\CRCF_3D_FLUENT_NORMAL\CRCF_1019-1021\09470

09/21/2007  01:26p      <DIR>          .
09/21/2007  01:54p      <DIR>          ..
09/04/2007  09:33a                 666 cans_max_fuel_temp_1021_09470.trn
09/04/2007  09:29a               1,962 cans_max_surf_temp_1021_09470.trn
09/04/2007  08:37a                 504 conc_clg_max_surf_temp_1021_09470.trn
09/04/2007  08:42a                 450 conc_e_max_surf_temp_1021_09470.trn
09/04/2007  08:48a                 504 conc_flr_max_surf_temp_1021_09470.trn
09/04/2007  10:10a                 990 conc_max_surf_temp_1019_09470.trn
09/04/2007  08:40a                 450 conc_n_max_surf_temp_1021_09470.trn
09/04/2007  08:43a                 342 conc_s_max_surf_temp_1021_09470.trn
09/04/2007  08:45a                 450 conc_w_max_surf_temp_1021_09470.trn
09/04/2007  07:53a          51,353,389 crcf_1019_1021_09470_3773.cas
09/04/2007  07:09a         151,933,909 crcf_1019_1021_09470_3773.dat
09/04/2007  07:12a                 928 energy_balance_1019_09470.trn
09/04/2007  07:15a               1,905 energy_balance_1021_09470.trn
09/04/2007  07:21a               1,208 hlw1_heat_trans_1021_09470.trn
09/04/2007  07:22a               1,206 hlw2_heat_trans_1021_09470.trn
09/04/2007  07:23a               1,206 hlw3_heat_trans_1021_09470.trn
09/04/2007  07:26a               1,207 hlw4_heat_trans_1021_09470.trn
09/04/2007  07:27a               1,208 hlw5_heat_trans_1021_09470.trn
09/04/2007  07:20a               1,196 snf_heat_trans_1021_09470.trn
09/04/2007  07:19a                 985 tube_heat_trans_1019_09470.trn
09/04/2007  09:10a                 504 tube_max_surf_temp_1019_09470.trn
              21 File(s)    203,305,169 bytes

 Directory of D:\CRCF_3D_FLUENT_NORMAL\CRCF_1019-1021\11800

09/21/2007  01:28p      <DIR>          .
09/21/2007  01:54p      <DIR>          ..
09/04/2007  10:04a                 666 cans_max_fuel_temp_1021_11800.trn
09/04/2007  10:03a               1,962 cans_max_surf_temp_1021_11800.trn
09/04/2007  09:45a                 504 conc_clg_max_surf_temp_1021_11800.trn
09/04/2007  09:48a                 450 conc_e_max_surf_temp_1021_11800.trn
09/04/2007  09:52a                 504 conc_flr_max_surf_temp_1021_11800.trn
09/04/2007  09:59a                 990 conc_max_surf_temp_1019_11800.trn
09/04/2007  09:47a                 450 conc_n_max_surf_temp_1021_11800.trn
09/04/2007  09:49a                 342 conc_s_max_surf_temp_1021_11800.trn
09/04/2007  09:50a                 450 conc_w_max_surf_temp_1021_11800.trn
09/04/2007  09:41a          51,353,047 crcf_1019_1021_11800_2650.cas
08/29/2007  10:04a         151,826,101 crcf_1019_1021_11800_2650.dat
08/29/2007  10:06a                 931 energy_balance_1019_11800.trn
08/29/2007  10:27a               1,902 energy_balance_1021_11800.trn
08/29/2007  10:32a               1,675 hlw1_heat_trans_1021_11800.trn
08/29/2007  10:34a               1,206 hlw2_heat_trans_1021_11800.trn
08/29/2007  10:36a               1,206 hlw3_heat_trans_1021_11800.trn
08/29/2007  10:38a               1,207 hlw4_heat_trans_1021_11800.trn
08/29/2007  10:39a               1,206 hlw5_heat_trans_1021_11800.trn
08/29/2007  10:29a               1,198 snf_heat_trans_1021_11800.trn
08/29/2007  10:07a                 985 tube_heat_trans_1019_11800.trn
09/04/2007  10:00a                 504 tube_max_surf_temp_1019_11800.trn
              21 File(s)    203,197,486 bytes

 Directory of D:\CRCF_3D_FLUENT_NORMAL\CRCF_1019-1021\18000

09/21/2007  01:49p      <DIR>          .
09/21/2007  01:54p      <DIR>          ..
09/04/2007  10:36a                 666 cans_max_fuel_temp_1021_18000.trn
09/04/2007  10:36a               1,962 cans_max_surf_temp_1021_18000.trn
```

```
09/04/2007  10:18a                504 conc_clg_max_surf_temp_1021_18000.trn
09/04/2007  10:21a                450 conc_e_max_surf_temp_1021_18000.trn
09/04/2007  10:25a                504 conc_flr_max_surf_temp_1021_18000.trn
09/04/2007  10:31a              1,105 conc_max_surf_temp_1019_18000.trn
09/04/2007  10:20a                450 conc_n_max_surf_temp_1021_18000.trn
09/04/2007  10:22a                342 conc_s_max_surf_temp_1021_18000.trn
09/04/2007  10:23a                450 conc_w_max_surf_temp_1021_18000.trn
09/04/2007  10:44a         51,353,668 crcf_1019_1021_18000_3923.cas
08/30/2007  06:28a        151,948,309 crcf_1019_1021_18000_3923.dat
08/30/2007  06:35a                932 energy_balance_1019_18000.trn
08/30/2007  06:38a              1,904 energy_balance_1021_18000.trn
08/30/2007  06:40a              1,208 hlw1_heat_trans_1021_18000.trn
08/30/2007  06:42a              1,207 hlw2_heat_trans_1021_18000.trn
08/30/2007  06:43a              1,208 hlw3_heat_trans_1021_18000.trn
08/30/2007  06:44a              1,676 hlw4_heat_trans_1021_18000.trn
08/30/2007  06:46a              1,208 hlw5_heat_trans_1021_18000.trn
08/30/2007  06:39a              1,194 snf_heat_trans_1021_18000.trn
09/02/2007  08:07a                986 tube_heat_trans_1019_18000.trn
09/04/2007  10:34a                504 tube_max_surf_temp_1019_18000.trn
              21 File(s)    203,320,437 bytes

 Directory of D:\CRCF_3D_FLUENT_NORMAL\CRCF_1019-1021\25000

09/21/2007  01:54p      <DIR>          .
09/21/2007  01:54p      <DIR>          ..
09/04/2007  11:11a                666 cans_max_fuel_temp_1021_25000.trn
09/04/2007  11:10a              1,962 cans_max_surf_temp_1021_25000.trn
09/04/2007  10:54a                504 conc_clg_max_surf_temp_1021_25000.trn
09/04/2007  10:58a                450 conc_e_max_surf_temp_1021_25000.trn
09/04/2007  11:02a                504 conc_flr_max_surf_temp_1021_25000.trn
09/04/2007  11:04a                990 conc_max_surf_temp_1019_25000.trn
09/04/2007  10:56a                450 conc_n_max_surf_temp_1021_25000.trn
09/04/2007  10:58a                342 conc_s_max_surf_temp_1021_25000.trn
09/04/2007  11:00a                450 conc_w_max_surf_temp_1021_25000.trn
09/04/2007  10:47a         51,353,279 crcf_1019_1021_25000_5217.cas
08/31/2007  10:24a        152,072,533 crcf_1019_1021_25000_5217.dat
08/31/2007  10:28a                935 energy_balance_1019_25000.trn
08/31/2007  10:30a              1,904 energy_balance_1021_25000.trn
08/31/2007  10:32a              1,207 hlw1_heat_trans_1021_25000.trn
08/31/2007  10:33a              1,207 hlw2_heat_trans_1021_25000.trn
08/31/2007  10:33a              1,208 hlw3_heat_trans_1021_25000.trn
08/31/2007  10:34a              1,207 hlw4_heat_trans_1021_25000.trn
08/31/2007  10:35a              1,204 hlw5_heat_trans_1021_25000.trn
08/31/2007  10:31a              1,198 snf_heat_trans_1021_25000.trn
08/31/2007  10:36a                986 tube_heat_trans_1019_25000.trn
09/04/2007  11:08a                504 tube_max_surf_temp_1019_25000.trn
              21 File(s)    203,443,690 bytes

 Directory of D:\CRCF_3D_FLUENT_NORMAL\CRCF_1019-1021\30000

09/21/2007  01:57p      <DIR>          .
09/21/2007  01:54p      <DIR>          ..
09/04/2007  12:11p                666 cans_max_fuel_temp_1021_30000.trn
09/04/2007  12:09p              1,962 cans_max_surf_temp_1021_30000.trn
09/04/2007  11:17a                504 conc_clg_max_surf_temp_1021_30000.trn
09/04/2007  11:23a                450 conc_e_max_surf_temp_1021_30000.trn
09/04/2007  11:27a                504 conc_flr_max_surf_temp_1021_30000.trn
09/04/2007  12:06p                990 conc_max_surf_temp_1019_30000.trn
09/04/2007  11:22a                450 conc_n_max_surf_temp_1021_30000.trn
09/04/2007  11:23a                342 conc_s_max_surf_temp_1021_30000.trn
09/04/2007  11:25a                450 conc_w_max_surf_temp_1021_30000.trn
09/04/2007  11:15a         51,353,277 crcf_1019_1021_30000_6454.cas
09/02/2007  07:53a        152,191,285 crcf_1019_1021_30000_6454.dat
```

```
09/02/2007  07:56a                935 energy_balance_1019_30000.trn
09/02/2007  07:59a              1,900 energy_balance_1021_30000.trn
09/02/2007  08:02a              1,207 hlw1_heat_trans_1021_30000.trn
09/02/2007  08:02a              1,206 hlw2_heat_trans_1021_30000.trn
09/02/2007  08:03a              1,204 hlw3_heat_trans_1021_30000.trn
09/02/2007  08:04a              1,208 hlw4_heat_trans_1021_30000.trn
09/02/2007  08:05a              1,208 hlw5_heat_trans_1021_30000.trn
09/02/2007  08:00a              1,198 snf_heat_trans_1021_30000.trn
09/02/2007  07:55a                986 tube_heat_trans_1019_30000.trn
09/04/2007  12:07p                504 tube_max_surf_temp_1019_30000.trn
              21 File(s)    203,562,436 bytes

 Directory of D:\CRCF_3D_FLUENT_NORMAL\CRCF_1019-1021\FLOW

09/21/2007  01:23p      <DIR>          .
09/21/2007  01:54p      <DIR>          ..
08/28/2007  06:40a          51,352,964 crcf_1019_1021_flow_1209.cas
08/28/2007  06:40a         151,687,765 crcf_1019_1021_flow_1209.dat
08/28/2007  06:41a               1,655 mass_balance_1019_1021.trn
               3 File(s)    203,042,384 bytes

 Directory of D:\CRCF_3D_FLUENT_NORMAL\CRCF_1022-1023

09/21/2007  02:31p      <DIR>          .
09/22/2007  06:56a      <DIR>          ..
09/21/2007  02:33p      <DIR>          09470_11800
09/21/2007  02:29p      <DIR>          09470_30000
09/21/2007  02:38p      <DIR>          11800_11800
09/21/2007  02:40p      <DIR>          18000_18000
09/21/2007  02:42p      <DIR>          25000_25000
09/21/2007  02:44p      <DIR>          30000_30000
09/21/2007  02:53p      <DIR>          FLOW
08/10/2007  08:27a          41,489,642 fluent_12.msh
               1 File(s)     41,489,642 bytes

 Directory of D:\CRCF_3D_FLUENT_NORMAL\CRCF_1022-1023\09470_11800

09/21/2007  02:33p      <DIR>          .
09/21/2007  02:31p      <DIR>          ..
08/29/2007  09:50a                504 conc_clg_max_surf_temp_1022_09470.trn
08/29/2007  09:34a                504 conc_e_max_surf_temp_1022_09470.trn
08/29/2007  09:48a                504 conc_flr_max_surf_temp_1022_09470.trn
09/04/2007  02:19p                882 conc_max_surf_temp_1023_09470.trn
08/29/2007  09:19a                342 conc_n_max_surf_temp_1022_09470.trn
08/29/2007  09:31a                450 conc_s_max_surf_temp_1022_09470.trn
08/29/2007  09:20a                450 conc_w_max_surf_temp_1022_09470.trn
08/27/2007  03:41p          39,724,907 crcf_1022_1023_09470_2283.cas
08/27/2007  03:41p         113,278,080 crcf_1022_1023_09470_2283.dat
08/27/2007  03:35p                746 engergy_balance_1022_09470.trn
08/27/2007  03:37p                830 engergy_balance_1023_09470.trn
08/29/2007  09:14a                342 tad_max_clad_temp_1022_09470.trn
08/29/2007  09:15a                612 tad_max_surf_temp_1022_09470.trn
08/27/2007  03:40p                984 tube_heat_trans_1023_09470.trn
08/29/2007  09:09a                504 tube_max_surf_temp_1023_09470.trn
              15 File(s)    153,010,641 bytes

 Directory of D:\CRCF_3D_FLUENT_NORMAL\CRCF_1022-1023\09470_30000

09/21/2007  02:29p      <DIR>          .
09/21/2007  02:31p      <DIR>          ..
09/08/2007  07:48a                504 conc_clg_max_surf_temp_1022_09470-30.trn
09/08/2007  07:46a                504 conc_e_max_surf_temp_1022_09470-30.trn
09/08/2007  07:46a                504 conc_flr_max_surf_temp_1022_09470-30.trn
```

```
09/08/2007  07:53a                882 conc_max_surf_temp_1023_09470-30.trn
09/08/2007  07:42a                342 conc_n_max_surf_temp_1022_09470-30.trn
09/08/2007  07:44a                450 conc_s_max_surf_temp_1022_09470-30.trn
09/08/2007  07:43a                450 conc_w_max_surf_temp_1022_09470-30.trn
09/08/2007  07:17a         39,724,914 crcf_1022_1023_09470-30_3123.cas
09/08/2007  07:17a        113,358,720 crcf_1022_1023_09470-30_3123.dat
09/08/2007  07:23a                750 engergy_balance_1022_09470-30.trn
09/08/2007  07:26a                829 engergy_balance_1023_09470-30.trn
09/08/2007  07:31a              1,193 tad_heat_trans_1022_09470-30.trn
09/08/2007  07:36a                342 tad_max_clad_temp_1022_09470-30.trn
09/08/2007  07:35a                612 tad_max_surf_temp_1022_09470-30.trn
09/08/2007  07:30a                981 tube_heat_trans_1023_09470-30.trn
09/08/2007  07:33a                504 tube_max_surf_temp_1023_09470-30.trn
              16 File(s)    153,092,481 bytes

 Directory of D:\CRCF_3D_FLUENT_NORMAL\CRCF_1022-1023\11800_11800

09/21/2007  02:38p      <DIR>          .
09/21/2007  02:31p      <DIR>          ..
08/28/2007  02:23p                504 conc_clg_max_surf_temp_1022_11800.trn
08/24/2007  10:03a                504 conc_e_max_surf_temp_1022_11800.trn
08/24/2007  10:05a                504 conc_flr_max_surf_temp_1022_11800.trn
09/04/2007  01:53p                882 conc_max_surf_temp_1023_11800.trn
08/24/2007  09:57a                342 conc_n_max_surf_temp_1022_11800.trn
08/24/2007  10:01a                450 conc_s_max_surf_temp_1022_11800.trn
08/24/2007  09:59a                450 conc_w_max_surf_temp_1022_11800.trn
08/15/2007  06:30a         39,724,907 crcf_1022_1023_11800_1624.cas
08/15/2007  06:07a        113,214,816 crcf_1022_1023_11800_1624.dat
08/15/2007  06:19a                746 engergy_balance_1022_11800.trn
08/15/2007  06:17a                833 engergy_balance_1023_11800.trn
08/15/2007  06:34a              1,192 tad_heat_trans_1022_11800.trn
08/24/2007  08:47a                342 tad_max_clad_temp_1022_11800.trn
08/24/2007  08:40a                612 tad_max_surf_temp_1022_11800.trn
08/15/2007  06:36a                984 tube_heat_trans_1023_11800.trn
08/24/2007  08:38a                504 tube_max_surf_temp_1023_11800.trn
              16 File(s)    152,948,572 bytes

 Directory of D:\CRCF_3D_FLUENT_NORMAL\CRCF_1022-1023\18000_18000

09/21/2007  02:40p      <DIR>          .
09/21/2007  02:31p      <DIR>          ..
08/28/2007  01:34p                504 conc_clg_max_surf_temp_1022_18000.trn
08/28/2007  01:47p                504 conc_e_max_surf_temp_1022_18000.trn
08/28/2007  01:49p                504 conc_flr_max_surf_temp_1022_18000.trn
09/04/2007  01:56p                882 conc_max_surf_temp_1023_18000.trn
08/28/2007  01:35p                342 conc_n_max_surf_temp_1022_18000.trn
08/28/2007  01:38p                450 conc_s_max_surf_temp_1022_18000.trn
08/28/2007  01:36p                450 conc_w_max_surf_temp_1022_18000.trn
08/15/2007  03:11p         39,724,985 crcf_1022_1023_18000_2451.cas
08/15/2007  03:11p        113,294,208 crcf_1022_1023_18000_2451.dat
08/15/2007  03:13p                749 engergy_balance_1022_18000.trn
08/15/2007  03:12p                833 engergy_balance_1023_18000.trn
08/15/2007  03:15p              1,193 tad_heat_trans_1022_18000.trn
08/28/2007  01:22p                342 tad_max_clad_temp_1022_18000.trn
08/28/2007  01:25p                612 tad_max_surf_temp_1022_18000.trn
08/15/2007  03:16p                983 tube_heat_trans_1023_18000.trn
08/28/2007  01:27p              1,071 tube_max_surf_temp_1023_18000.trn
              16 File(s)    153,028,612 bytes

 Directory of D:\CRCF_3D_FLUENT_NORMAL\CRCF_1022-1023\25000_25000

09/21/2007  02:42p      <DIR>          .
09/21/2007  02:31p      <DIR>          ..
```

```
08/29/2007  07:53a                504 conc_clg_max_surf_temp_1022_25000.trn
08/29/2007  07:49a                504 conc_e_max_surf_temp_1022_25000.trn
08/29/2007  07:51a                504 conc_flr_max_surf_temp_1022_25000.trn
09/04/2007  01:59p                882 conc_max_surf_temp_1023_25000.trn
08/29/2007  07:42a                342 conc_n_max_surf_temp_1022_25000.trn
08/29/2007  07:47a                450 conc_s_max_surf_temp_1022_25000.trn
08/29/2007  07:44a                450 conc_w_max_surf_temp_1022_25000.trn
08/16/2007  06:17a         39,724,911 crcf_1022_1023_25000_3287.cas
08/16/2007  06:18a        113,374,464 crcf_1022_1023_25000_3287.dat
08/16/2007  06:18a                748 engergy_balance_1022_25000.trn
08/16/2007  06:20a                833 engergy_balance_1023_25000.trn
08/16/2007  06:22a              1,191 tad_heat_trans_1022_25000.trn
08/29/2007  07:38a                342 tad_max_clad_temp_1022_25000.trn
08/29/2007  07:40a                612 tad_max_surf_temp_1022_25000.trn
08/16/2007  06:21a                984 tube_heat_trans_1023_25000.trn
08/29/2007  07:36a                504 tube_max_surf_temp_1023_25000.trn
              16 File(s)    153,108,225 bytes

 Directory of D:\CRCF_3D_FLUENT_NORMAL\CRCF_1022-1023\30000_30000

09/21/2007  02:44p      <DIR>          .
09/21/2007  02:31p      <DIR>          ..
08/29/2007  08:46a                504 conc_clg_max_surf_temp_1022_30000.trn
08/29/2007  08:41a                504 conc_e_max_surf_temp_1022_30000.trn
08/29/2007  08:44a                504 conc_flr_max_surf_temp_1022_30000.trn
09/04/2007  02:01p                882 conc_max_surf_temp_1023_30000.trn
08/29/2007  08:29a                342 conc_n_max_surf_temp_1022_30000.trn
08/29/2007  08:38a                450 conc_s_max_surf_temp_1022_30000.trn
08/29/2007  08:33a                450 conc_w_max_surf_temp_1022_30000.trn
08/20/2007  06:28a         39,724,911 crcf_1022_1023_30000_4074.cas
08/20/2007  06:28a        113,450,016 crcf_1022_1023_30000_4074.dat
08/20/2007  06:32a                751 engergy_balance_1022_30000.trn
08/20/2007  06:39a                833 engergy_balance_1023_30000.trn
08/20/2007  06:37a              1,192 tad_heat_trans_1022_30000.trn
08/29/2007  08:07a                342 tad_max_clad_temp_1022_30000.trn
08/29/2007  08:09a                612 tad_max_surf_temp_1022_30000.trn
08/20/2007  06:36a                983 tube_heat_trans_1023_30000.trn
08/29/2007  08:05a                504 tube_max_surf_temp_1023_30000.trn
              16 File(s)    153,183,780 bytes

 Directory of D:\CRCF_3D_FLUENT_NORMAL\CRCF_1022-1023\FLOW

09/21/2007  02:53p      <DIR>          .
09/21/2007  02:31p      <DIR>          ..
08/14/2007  06:26a         39,724,810 crcf_1022_1023_flow_0837.cas
08/14/2007  06:26a        113,139,256 crcf_1022_1023_flow_0837.dat
08/14/2007  06:27a              1,038 mass_balance_1022_1023_flow.trn
               3 File(s)    152,865,104 bytes

 Directory of D:\CRCF_FLUENT_MESHES

09/22/2007  08:46a      <DIR>          .
09/27/2007  09:22a      <DIR>          ..
09/22/2007  08:46a      <DIR>          CRCF_1019-1021_AUTOHEXA
09/22/2007  08:46a      <DIR>          CRCF_1019_1021_ICEM
09/22/2007  08:46a      <DIR>          CRCF_1022-1023_AUTOHEXA
09/22/2007  08:46a      <DIR>          CRCF_1022-1023_ICEM
               0 File(s)              0 bytes

 Directory of D:\CRCF_FLUENT_MESHES\CRCF_1019-1021_AUTOHEXA

09/22/2007  08:46a      <DIR>          .
09/22/2007  08:46a      <DIR>          ..
```

```
08/27/2007  08:47a                247 annotations
08/27/2007  08:47a            433,208 autohex.tin
08/07/2007  08:07a         59,975,188 auto_domain.1
08/27/2007  08:47a              7,184 boco
08/27/2007  08:47a                726 family_boco
08/07/2007  08:07a                  0 grid_errors
08/07/2007  08:07a                149 grid_input
08/07/2007  08:07a              3,012 grid_params
08/27/2007  08:46a                 34 job
09/15/2007  10:57a                308 messages.log
08/27/2007  08:47a             21,665 model
08/27/2007  08:47a                 11 model_timestamp
08/27/2007  08:46a             20,099 problem
08/07/2007  08:07a              2,118 subset_families
              14 File(s)     60,463,949 bytes

 Directory of D:\CRCF_FLUENT_MESHES\CRCF_1019_1021_ICEM

09/22/2007  08:46a      <DIR>          .
09/22/2007  08:46a      <DIR>          ..
08/27/2007  02:58p             23,362 boco
08/27/2007  02:58p             12,167 family_boco.fbc
08/27/2007  03:27p         53,411,565 fluent_1019-1021_mesh29.msh
08/27/2007  02:58p         42,262,252 hex.uns
08/27/2007  03:25p            545,164 project29.blk
08/27/2007  03:25p             12,228 project29.fbc
08/27/2007  03:25p             12,227 project29.fbc_old
08/27/2007  03:28p             68,695 project29.jrf
08/27/2007  03:25p              3,130 project29.prj
08/27/2007  03:26p              4,594 project29.rampant.fbc
08/27/2007  03:26p              4,593 project29.rampant.fbc_old
08/27/2007  03:25p            604,313 project29.tin
08/27/2007  03:25p         42,262,100 project29.uns
              13 File(s)    139,226,390 bytes

 Directory of D:\CRCF_FLUENT_MESHES\CRCF_1022-1023_AUTOHEXA

09/22/2007  08:46a      <DIR>          .
09/22/2007  08:46a      <DIR>          ..
08/07/2007  11:11a            156,287 autohex.tin
08/07/2007  08:08a         59,975,188 auto_domain.1
08/07/2007  11:11a              4,735 boco
08/07/2007  11:11a                419 family_boco
08/07/2007  08:08a                  0 grid_errors
08/07/2007  08:08a                149 grid_input
08/07/2007  08:08a              3,012 grid_params
08/07/2007  11:11a                 34 job
09/15/2007  10:57a                352 messages.log
08/07/2007  11:11a             11,062 model
08/07/2007  11:11a                 11 model_timestamp
08/07/2007  11:11a             20,099 problem
08/07/2007  08:08a              2,118 subset_families
              13 File(s)     60,173,466 bytes

 Directory of D:\CRCF_FLUENT_MESHES\CRCF_1022-1023_ICEM

09/22/2007  08:46a      <DIR>          .
09/22/2007  08:46a      <DIR>          ..
08/14/2007  02:08p             14,574 boco
08/14/2007  02:08p              7,747 family_boco.fbc
08/10/2007  08:27a         41,489,642 fluent_12.msh
08/14/2007  02:08p         32,794,378 hex.uns
08/09/2007  03:40p            199,844 project12.blk
```

```
08/09/2007  03:40p               7,808 project12.fbc
08/09/2007  03:40p               7,807 project12.fbc_old
08/14/2007  03:16p              29,364 project12.jrf
08/09/2007  03:40p               2,657 project12.prj
08/10/2007  08:26a               2,826 project12.rampant.fbc
08/10/2007  08:26a               2,825 project12.rampant.fbc_old
08/09/2007  03:40p             287,715 project12.tin
08/09/2007  03:40p          32,794,226 project12.uns
              13 File(s)    107,641,413 bytes

     Total Files Listed:
             328 File(s)  2,758,518,268 bytes
              99 Dir(s)               0 bytes free
```

DVD 2 OF 2

```
Volume in drive D is 071001_1046
 Volume Serial Number is 59FA-F4DE

 Directory of D:\

09/22/2007  06:57a      <DIR>          CRCF_2D_FROM_ANSYS3D_OFFNORM
09/22/2007  06:57a      <DIR>          CRCF_2D_FROM_FLUENT3D_ITS_EXH
09/22/2007  06:57a      <DIR>          CRCF_3D_ANSYS_OFFNORM
09/22/2007  06:57a      <DIR>          CRCF_3D_FLUENT_ITS_EXH
               0 File(s)              0 bytes

 Directory of D:\CRCF_2D_FROM_ANSYS3D_OFFNORM

09/22/2007  06:57a      <DIR>          .
10/01/2007  10:46a      <DIR>          ..
09/18/2007  04:20p             193,536 2d_results.xls
09/21/2007  03:49p      <DIR>          5PACK_11_WP_RM1023_K_0p646
09/21/2007  03:49p      <DIR>          5PACK_11_WP_RM1023_K_6p5
09/21/2007  03:49p      <DIR>          5PACK_30_WP_RM1023_K_0p646
09/21/2007  03:49p      <DIR>          5PACK_30_WP_RM1023_K_6p5
09/21/2007  03:50p      <DIR>          BC_3D-2D_1023_ANSYS
09/21/2007  03:49p      <DIR>          TAD_WP_11800_RM1023_K_0p646
09/21/2007  03:49p      <DIR>          TAD_WP_11800_RM1023_K_6p5
09/21/2007  03:49p      <DIR>          TAD_WP_18000_RM1023_K_0p646
09/21/2007  03:49p      <DIR>          TAD_WP_18000_RM1023_K_6p5
09/21/2007  03:49p      <DIR>          TAD_WP_25000_RM1023_K_0p646
09/21/2007  03:49p      <DIR>          TAD_WP_25000_RM1023_K_6p5
09/21/2007  03:49p      <DIR>          TAD_WP_30000_RM1023_K_0p646
09/21/2007  03:49p      <DIR>          TAD_WP_30000_RM1023_K_6p5
               1 File(s)        193,536 bytes

 Directory of D:\CRCF_2D_FROM_ANSYS3D_OFFNORM\5PACK_11_WP_RM1023_K_0p646

09/21/2007  03:49p      <DIR>          .
09/22/2007  06:57a      <DIR>          ..
09/06/2007  11:16a               9,568 5pack_in_tube_matprops.dat
09/06/2007  11:16a              83,601 5pack_tube_1023_ic.inp
09/06/2007  11:16a             445,610 5pack_tube_1023_ic.out
09/06/2007  11:16a           3,355,435 5pack_tube_1023_ic.parm
09/06/2007  11:16a              84,217 5pack_tube_1023_tr.inp
09/06/2007  11:16a             590,638 5pack_tube_1023_tr.out
09/06/2007  11:16a           3,355,471 5pack_tube_1023_tr.parm
09/06/2007  11:16a                 494 runfile_all
```

```
09/06/2007  11:16a                 246 runfile_ic
09/06/2007  11:16a                 246 runfile_tr
09/06/2007  11:16a               1,909 tube_temp_bc.dat
              11 File(s)      7,927,435 bytes

 Directory of D:\CRCF_2D_FROM_ANSYS3D_OFFNORM\5PACK_11_WP_RM1023_K_6p5

09/21/2007  03:49p      <DIR>          .
09/22/2007  06:57a      <DIR>          ..
09/06/2007  11:17a               9,566 5pack_in_tube_matprops.dat
09/06/2007  11:17a              83,601 5pack_tube_1023_ic.inp
09/06/2007  11:17a             445,021 5pack_tube_1023_ic.out
09/06/2007  11:17a           3,355,435 5pack_tube_1023_ic.parm
09/06/2007  11:17a              84,217 5pack_tube_1023_tr.inp
09/06/2007  11:17a             590,638 5pack_tube_1023_tr.out
09/06/2007  11:17a           3,355,471 5pack_tube_1023_tr.parm
09/06/2007  11:17a                 494 runfile_all
09/06/2007  11:17a                 246 runfile_ic
09/06/2007  11:17a                 246 runfile_tr
09/06/2007  11:17a               1,909 tube_temp_bc.dat
              11 File(s)      7,926,844 bytes

 Directory of D:\CRCF_2D_FROM_ANSYS3D_OFFNORM\5PACK_30_WP_RM1023_K_0p646

09/21/2007  03:49p      <DIR>          .
09/22/2007  06:57a      <DIR>          ..
09/09/2007  09:07a               9,568 5pack_in_tube_matprops.dat
09/09/2007  09:07a              83,601 5pack_tube_1023_ic.inp
09/09/2007  09:07a             445,466 5pack_tube_1023_ic.out
09/09/2007  09:07a           3,355,435 5pack_tube_1023_ic.parm
09/09/2007  09:07a              84,217 5pack_tube_1023_tr.inp
09/09/2007  09:07a             590,926 5pack_tube_1023_tr.out
09/09/2007  09:07a           3,355,471 5pack_tube_1023_tr.parm
09/09/2007  09:07a                 494 runfile_all
09/09/2007  09:07a                 246 runfile_ic
09/09/2007  09:07a                 246 runfile_tr
09/09/2007  09:07a               1,915 tube_temp_bc.dat
              11 File(s)      7,927,585 bytes

 Directory of D:\CRCF_2D_FROM_ANSYS3D_OFFNORM\5PACK_30_WP_RM1023_K_6p5

09/21/2007  03:49p      <DIR>          .
09/22/2007  06:57a      <DIR>          ..
09/09/2007  09:08a               9,566 5pack_in_tube_matprops.dat
09/09/2007  09:08a              83,601 5pack_tube_1023_ic.inp
09/09/2007  09:08a             445,021 5pack_tube_1023_ic.out
09/09/2007  09:08a           3,355,435 5pack_tube_1023_ic.parm
09/09/2007  09:08a              84,217 5pack_tube_1023_tr.inp
09/09/2007  09:08a             590,926 5pack_tube_1023_tr.out
09/09/2007  09:08a           3,355,471 5pack_tube_1023_tr.parm
09/09/2007  09:08a                 494 runfile_all
09/09/2007  09:08a                 246 runfile_ic
09/09/2007  09:08a                 246 runfile_tr
09/09/2007  09:08a               1,915 tube_temp_bc.dat
              11 File(s)      7,927,138 bytes

 Directory of D:\CRCF_2D_FROM_ANSYS3D_OFFNORM\BC_3D-2D_1023_ANSYS

09/21/2007  03:50p      <DIR>          .
09/22/2007  06:57a      <DIR>          ..
09/21/2007  03:50p      <DIR>          CRCF_CASK-09470_TAD-11800
09/21/2007  03:50p      <DIR>          CRCF_CASK-09470_TAD-30000
09/21/2007  03:50p      <DIR>          CRCF_CASK-11800_TAD-11800
```

```
09/21/2007  03:50p      <DIR>          CRCF_CASK-18000_TAD-18000
09/21/2007  03:50p      <DIR>          CRCF_CASK-25000_TAD-25000
09/21/2007  03:50p      <DIR>          CRCF_CASK-30000_TAD-30000
               0 File(s)              0 bytes

 Directory of D:\CRCF_2D_FROM_ANSYS3D_OFFNORM\BC_3D-2D_1023_ANSYS\CRCF_CASK-09470_TAD-
11800

09/21/2007  03:50p      <DIR>          .
09/21/2007  03:50p      <DIR>          ..
09/06/2007  10:40a               1,909 tube_temp_bc.dat
               1 File(s)          1,909 bytes

 Directory of D:\CRCF_2D_FROM_ANSYS3D_OFFNORM\BC_3D-2D_1023_ANSYS\CRCF_CASK-09470_TAD-
30000

09/21/2007  03:50p      <DIR>          .
09/21/2007  03:50p      <DIR>          ..
09/09/2007  08:22a               1,915 tube_temp_bc.dat
               1 File(s)          1,915 bytes

 Directory of D:\CRCF_2D_FROM_ANSYS3D_OFFNORM\BC_3D-2D_1023_ANSYS\CRCF_CASK-11800_TAD-
11800

09/21/2007  03:50p      <DIR>          .
09/21/2007  03:50p      <DIR>          ..
07/17/2007  03:46p               1,929 tube_temp_bc.dat
               1 File(s)          1,929 bytes

 Directory of D:\CRCF_2D_FROM_ANSYS3D_OFFNORM\BC_3D-2D_1023_ANSYS\CRCF_CASK-18000_TAD-
18000

09/21/2007  03:50p      <DIR>          .
09/21/2007  03:50p      <DIR>          ..
07/17/2007  03:55p               1,944 tube_temp_bc.dat
               1 File(s)          1,944 bytes

 Directory of D:\CRCF_2D_FROM_ANSYS3D_OFFNORM\BC_3D-2D_1023_ANSYS\CRCF_CASK-25000_TAD-
25000

09/21/2007  03:50p      <DIR>          .
09/21/2007  03:50p      <DIR>          ..
07/17/2007  03:55p               1,943 tube_temp_bc.dat
               1 File(s)          1,943 bytes

 Directory of D:\CRCF_2D_FROM_ANSYS3D_OFFNORM\BC_3D-2D_1023_ANSYS\CRCF_CASK-30000_TAD-
30000

09/21/2007  03:50p      <DIR>          .
09/21/2007  03:50p      <DIR>          ..
07/17/2007  03:57p               1,942 tube_temp_bc.dat
               1 File(s)          1,942 bytes

 Directory of D:\CRCF_2D_FROM_ANSYS3D_OFFNORM\TAD_WP_11800_RM1023_K_0p646

09/21/2007  03:49p      <DIR>          .
09/22/2007  06:57a      <DIR>          ..
07/31/2007  07:45a                 524 runfile_all
07/31/2007  07:45a                 261 runfile_ic
07/31/2007  07:45a                 261 runfile_tr
07/31/2007  07:45a              24,117 tadwp_11_tube_1023_ic.inp
07/31/2007  07:45a             160,986 tadwp_11_tube_1023_ic.out
07/31/2007  07:45a           1,059,702 tadwp_11_tube_1023_ic.parm
```

```
07/31/2007  07:45a              24,802 tadwp_11_tube_1023_tr.inp
07/31/2007  07:45a             218,352 tadwp_11_tube_1023_tr.out
07/31/2007  07:45a           1,059,738 tadwp_11_tube_1023_tr.parm
07/31/2007  07:45a               8,777 TADWP_in_tube_matprops.dat
07/31/2007  07:45a               1,929 tube_temp_bc.dat
              11 File(s)      2,559,449 bytes

 Directory of D:\CRCF_2D_FROM_ANSYS3D_OFFNORM\TAD_WP_11800_RM1023_K_6p5

09/21/2007  03:49p      <DIR>          .
09/22/2007  06:57a      <DIR>          ..
07/31/2007  07:46a                 524 runfile_all
07/31/2007  07:46a                 261 runfile_ic
07/31/2007  07:46a                 261 runfile_tr
07/31/2007  07:46a              24,117 tadwp_11_tube_1023_ic.inp
07/31/2007  07:46a             160,698 tadwp_11_tube_1023_ic.out
07/31/2007  07:46a           1,059,702 tadwp_11_tube_1023_ic.parm
07/31/2007  07:46a              24,802 tadwp_11_tube_1023_tr.inp
07/31/2007  07:46a             220,080 tadwp_11_tube_1023_tr.out
07/31/2007  07:46a           1,059,738 tadwp_11_tube_1023_tr.parm
07/31/2007  07:46a               8,775 TADWP_in_tube_matprops.dat
07/31/2007  07:46a               1,929 tube_temp_bc.dat
              11 File(s)      2,560,887 bytes

 Directory of D:\CRCF_2D_FROM_ANSYS3D_OFFNORM\TAD_WP_18000_RM1023_K_0p646

09/21/2007  03:49p      <DIR>          .
09/22/2007  06:57a      <DIR>          ..
07/31/2007  07:46a                 524 runfile_all
07/31/2007  07:46a                 261 runfile_ic
07/31/2007  07:46a                 261 runfile_tr
07/31/2007  07:46a              24,116 tadwp_18_tube_1023_ic.inp
07/31/2007  07:46a             160,986 tadwp_18_tube_1023_ic.out
07/31/2007  07:46a           1,059,702 tadwp_18_tube_1023_ic.parm
07/31/2007  07:46a              24,801 tadwp_18_tube_1023_tr.inp
07/31/2007  07:46a             219,648 tadwp_18_tube_1023_tr.out
07/31/2007  07:46a           1,059,738 tadwp_18_tube_1023_tr.parm
07/31/2007  07:46a               8,777 TADWP_in_tube_matprops.dat
07/31/2007  07:46a               1,944 tube_temp_bc.dat
              11 File(s)      2,560,758 bytes

 Directory of D:\CRCF_2D_FROM_ANSYS3D_OFFNORM\TAD_WP_18000_RM1023_K_6p5

09/21/2007  03:49p      <DIR>          .
09/22/2007  06:57a      <DIR>          ..
07/31/2007  07:47a                 524 runfile_all
07/31/2007  07:47a                 261 runfile_ic
07/31/2007  07:47a                 261 runfile_tr
07/31/2007  07:47a              24,116 tadwp_18_tube_1023_ic.inp
07/31/2007  07:47a             160,842 tadwp_18_tube_1023_ic.out
07/31/2007  07:47a           1,059,702 tadwp_18_tube_1023_ic.parm
07/31/2007  07:47a              24,801 tadwp_18_tube_1023_tr.inp
07/31/2007  07:47a             220,080 tadwp_18_tube_1023_tr.out
07/31/2007  07:47a           1,059,738 tadwp_18_tube_1023_tr.parm
07/31/2007  07:47a               8,775 TADWP_in_tube_matprops.dat
07/31/2007  07:47a               1,944 tube_temp_bc.dat
              11 File(s)      2,561,044 bytes

 Directory of D:\CRCF_2D_FROM_ANSYS3D_OFFNORM\TAD_WP_25000_RM1023_K_0p646

09/21/2007  03:49p      <DIR>          .
09/22/2007  06:57a      <DIR>          ..
07/31/2007  07:47a                 524 runfile_all
```

```
07/31/2007  07:47a                 261 runfile_ic
07/31/2007  07:47a                 261 runfile_tr
07/31/2007  07:47a              24,116 tadwp_25_tube_1023_ic.inp
07/31/2007  07:47a             161,575 tadwp_25_tube_1023_ic.out
07/31/2007  07:47a           1,059,702 tadwp_25_tube_1023_ic.parm
07/31/2007  07:47a              24,801 tadwp_25_tube_1023_tr.inp
07/31/2007  07:47a             220,813 tadwp_25_tube_1023_tr.out
07/31/2007  07:47a           1,059,738 tadwp_25_tube_1023_tr.parm
07/31/2007  07:47a               8,777 TADWP_in_tube_matprops.dat
07/31/2007  07:47a               1,943 tube_temp_bc.dat
              11 File(s)      2,562,511 bytes

 Directory of D:\CRCF_2D_FROM_ANSYS3D_OFFNORM\TAD_WP_25000_RM1023_K_6p5

09/21/2007  03:49p      <DIR>          .
09/22/2007  06:57a      <DIR>          ..
07/31/2007  07:48a                 524 runfile_all
07/31/2007  07:48a                 261 runfile_ic
07/31/2007  07:48a                 261 runfile_tr
07/31/2007  07:48a              24,116 tadwp_25_tube_1023_ic.inp
07/31/2007  07:48a             160,986 tadwp_25_tube_1023_ic.out
07/31/2007  07:48a           1,059,702 tadwp_25_tube_1023_ic.parm
07/31/2007  07:48a              24,801 tadwp_25_tube_1023_tr.inp
07/31/2007  07:48a             220,224 tadwp_25_tube_1023_tr.out
07/31/2007  07:48a           1,059,738 tadwp_25_tube_1023_tr.parm
07/31/2007  07:48a               8,775 TADWP_in_tube_matprops.dat
07/31/2007  07:48a               1,943 tube_temp_bc.dat
              11 File(s)      2,561,331 bytes

 Directory of D:\CRCF_2D_FROM_ANSYS3D_OFFNORM\TAD_WP_30000_RM1023_K_0p646

09/21/2007  03:49p      <DIR>          .
09/22/2007  06:57a      <DIR>          ..
07/31/2007  03:26p      <DIR>          ALT_SOL_USING_NSUBST
07/31/2007  03:23p                 524 runfile_all
07/31/2007  03:23p                 261 runfile_ic
07/31/2007  03:23p                 261 runfile_tr
07/31/2007  03:23p              24,116 tadwp_30_tube_1023_ic.inp
07/31/2007  03:23p             161,575 tadwp_30_tube_1023_ic.out
07/31/2007  03:23p           1,059,702 tadwp_30_tube_1023_ic.parm
07/31/2007  03:23p              24,801 tadwp_30_tube_1023_tr.inp
07/31/2007  03:23p             220,957 tadwp_30_tube_1023_tr.out
07/31/2007  03:23p           1,059,738 tadwp_30_tube_1023_tr.parm
07/31/2007  03:23p               8,777 TADWP_in_tube_matprops.dat
07/31/2007  03:23p               1,942 tube_temp_bc.dat
              11 File(s)      2,562,654 bytes

 Directory of
D:\CRCF_2D_FROM_ANSYS3D_OFFNORM\TAD_WP_30000_RM1023_K_0p646\ALT_SOL_USING_NSUBST

07/31/2007  03:26p      <DIR>          .
09/21/2007  03:49p      <DIR>          ..
07/31/2007  03:23p                 266 runfile_tra
07/31/2007  03:23p           1,059,702 tadwp_30_tube_1023_ic.parm
07/31/2007  03:23p              24,820 tadwp_30_tube_1023_tra.inp
07/31/2007  03:23p             282,037 tadwp_30_tube_1023_tra.out
07/31/2007  03:23p           1,059,738 tadwp_30_tube_1023_tra.parm
07/31/2007  03:23p               8,777 TADWP_in_tube_matprops.dat
07/31/2007  03:23p               1,942 tube_temp_bc.dat
               7 File(s)      2,437,282 bytes

 Directory of D:\CRCF_2D_FROM_ANSYS3D_OFFNORM\TAD_WP_30000_RM1023_K_6p5
```

```
09/21/2007  03:49p      <DIR>          .
09/22/2007  06:57a      <DIR>          ..
07/31/2007  02:19p                 524 runfile_all
07/31/2007  02:19p                 261 runfile_ic
07/31/2007  02:19p                 261 runfile_tr
07/31/2007  02:19p              24,116 tadwp_30_tube_1023_ic.inp
07/31/2007  02:19p             161,287 tadwp_30_tube_1023_ic.out
07/31/2007  02:19p           1,059,702 tadwp_30_tube_1023_ic.parm
07/31/2007  02:19p              24,801 tadwp_30_tube_1023_tr.inp
07/31/2007  02:19p             220,512 tadwp_30_tube_1023_tr.out
07/31/2007  02:19p           1,059,738 tadwp_30_tube_1023_tr.parm
07/31/2007  02:19p               8,775 TADWP_in_tube_matprops.dat
07/31/2007  02:19p               1,942 tube_temp_bc.dat
              11 File(s)      2,561,919 bytes

 Directory of D:\CRCF_2D_FROM_FLUENT3D_ITS_EXH

09/22/2007  06:57a      <DIR>          .
10/01/2007  10:46a      <DIR>          ..
09/22/2007  06:50a      <DIR>          5PACK_WP_EXH_9470_K_6p5
09/22/2007  06:50a      <DIR>          TAD_WP_EXH_11800_K_6p5
09/22/2007  06:51a      <DIR>          TAD_WP_EXH_18000_K_6p5
09/22/2007  06:51a      <DIR>          TAD_WP_EXH_25000_K_6p5
09/22/2007  06:51a      <DIR>          TAD_WP_EXH_30000_K_6p5
               0 File(s)              0 bytes

 Directory of D:\CRCF_2D_FROM_FLUENT3D_ITS_EXH\5PACK_WP_EXH_9470_K_6p5

09/22/2007  06:50a      <DIR>          .
09/22/2007  06:57a      <DIR>          ..
09/06/2007  08:38a               9,328 5pack_in_tube_matprops.dat
09/21/2007  04:15p              79,046 5pack_tube_ss.inp
09/21/2007  04:18p             425,742 5pack_tube_ss.out
09/21/2007  04:18p               1,273 5pack_tube_ss.parm
09/07/2007  10:38a                 215 runfile
               5 File(s)        515,604 bytes

 Directory of D:\CRCF_2D_FROM_FLUENT3D_ITS_EXH\TAD_WP_EXH_11800_K_6p5

09/22/2007  06:50a      <DIR>          .
09/22/2007  06:57a      <DIR>          ..
09/07/2007  10:25a                 215 runfile
07/19/2007  01:30p               8,553 TADWP_in_tube_matprops.dat
09/10/2007  08:07a              22,584 tadwp_tube_ss.inp
09/10/2007  08:09a             150,197 tadwp_tube_ss.out
09/10/2007  08:09a               1,097 tadwp_tube_ss.parm
               5 File(s)        182,646 bytes

 Directory of D:\CRCF_2D_FROM_FLUENT3D_ITS_EXH\TAD_WP_EXH_18000_K_6p5

09/22/2007  06:51a      <DIR>          .
09/22/2007  06:57a      <DIR>          ..
09/07/2007  10:25a                 215 runfile
07/19/2007  01:30p               8,553 TADWP_in_tube_matprops.dat
09/10/2007  08:07a              22,585 tadwp_tube_ss.inp
09/10/2007  08:10a             150,343 tadwp_tube_ss.out
09/10/2007  08:10a               1,097 tadwp_tube_ss.parm
               5 File(s)        182,793 bytes

 Directory of D:\CRCF_2D_FROM_FLUENT3D_ITS_EXH\TAD_WP_EXH_25000_K_6p5

09/22/2007  06:51a      <DIR>          .
09/22/2007  06:57a      <DIR>          ..
```

```
09/07/2007  10:25a                 215 runfile
07/19/2007  01:30p               8,553 TADWP_in_tube_matprops.dat
09/10/2007  08:08a              22,585 tadwp_tube_ss.inp
09/10/2007  08:10a             150,485 tadwp_tube_ss.out
09/10/2007  08:10a               1,097 tadwp_tube_ss.parm
               5 File(s)        182,935 bytes

 Directory of D:\CRCF_2D_FROM_FLUENT3D_ITS_EXH\TAD_WP_EXH_30000_K_6p5

09/22/2007  06:51a      <DIR>          .
09/22/2007  06:57a      <DIR>          ..
09/07/2007  10:25a                 215 runfile
07/19/2007  01:30p               8,553 TADWP_in_tube_matprops.dat
09/10/2007  08:09a              22,585 tadwp_tube_ss.inp
09/10/2007  08:10a             150,781 tadwp_tube_ss.out
09/10/2007  08:10a               1,097 tadwp_tube_ss.parm
               5 File(s)        183,231 bytes

 Directory of D:\CRCF_3D_ANSYS_OFFNORM

09/22/2007  06:57a      <DIR>          .
10/01/2007  10:46a      <DIR>          ..
09/22/2007  07:51a      <DIR>          CRCF_1019-1021
09/22/2007  07:46a      <DIR>          CRCF_1022-1023
               0 File(s)              0 bytes

 Directory of D:\CRCF_3D_ANSYS_OFFNORM\CRCF_1019-1021

09/22/2007  07:51a      <DIR>          .
09/22/2007  06:57a      <DIR>          ..
09/29/2007  10:06a      <DIR>          09470
09/29/2007  10:06a      <DIR>          11800
09/29/2007  10:07a      <DIR>          18000
09/29/2007  10:07a      <DIR>          25000
09/29/2007  10:08a      <DIR>          30000
               0 File(s)              0 bytes

 Directory of D:\CRCF_3D_ANSYS_OFFNORM\CRCF_1019-1021\09470

09/29/2007  10:06a      <DIR>          .
09/22/2007  07:51a      <DIR>          ..
09/29/2007  10:06a              83,968 cask_09470_doe_9470_peak_temps_tr.xls
09/06/2007  09:13a              61,067 cask_9470_doe_9470_ic-c.inp
09/06/2007  09:13a             314,708 cask_9470_doe_9470_ic-c.out
09/06/2007  09:13a           5,172,487 cask_9470_doe_9470_ic-c.parm
09/06/2007  09:13a              49,935 cask_9470_doe_9470_tr.inp
09/06/2007  09:13a             326,289 cask_9470_doe_9470_tr.out
09/06/2007  09:13a           5,172,523 cask_9470_doe_9470_tr.parm
09/06/2007  09:13a               6,159 crcf_matprops2.dat
09/11/2007  03:31p              21,855 get_max_temps.inp
09/11/2007  03:20p             364,071 get_max_temps.out
09/06/2007  09:13a                 754 runfile_all
09/06/2007  09:13a                 272 runfile_ic
09/06/2007  09:13a                 220 runfile_temps
09/06/2007  09:13a                 260 runfile_tr
              14 File(s)     11,574,568 bytes

 Directory of D:\CRCF_3D_ANSYS_OFFNORM\CRCF_1019-1021\11800

09/29/2007  10:06a      <DIR>          .
09/22/2007  07:51a      <DIR>          ..
07/16/2007  08:03a              61,068 cask_11800_doe_9470_ic-c.inp
07/16/2007  08:03a             314,713 cask_11800_doe_9470_ic-c.out
```

```
07/16/2007  08:03a           5,172,487 cask_11800_doe_9470_ic-c.parm
09/29/2007  10:06a              83,968 cask_11800_doe_9470_peak_temps_tr.xls
07/16/2007  08:03a              49,895 cask_11800_doe_9470_tr.inp
07/16/2007  08:03a             326,332 cask_11800_doe_9470_tr.out
07/16/2007  08:03a           5,172,523 cask_11800_doe_9470_tr.parm
07/16/2007  08:03a               6,159 crcf_matprops2.dat
09/11/2007  02:15p              21,857 get_max_temps.inp
09/11/2007  02:45p             364,071 get_max_temps.out
07/16/2007  08:03a                 764 runfile_all
07/16/2007  08:03a                 277 runfile_ic
07/16/2007  08:03a                 220 runfile_temps
07/16/2007  08:03a                 265 runfile_tr
              14 File(s)     11,574,599 bytes

 Directory of D:\CRCF_3D_ANSYS_OFFNORM\CRCF_1019-1021\18000

09/29/2007  10:07a      <DIR>          .
09/22/2007  07:51a      <DIR>          ..
07/16/2007  08:04a              61,066 cask_18000_doe_9470_ic-c.inp
07/16/2007  08:04a             314,853 cask_18000_doe_9470_ic-c.out
07/16/2007  08:04a           5,172,487 cask_18000_doe_9470_ic-c.parm
09/29/2007  10:07a              83,456 cask_18000_doe_9470_peak_temps_tr.xls
07/16/2007  08:04a              49,893 cask_18000_doe_9470_tr.inp
07/16/2007  08:04a             326,328 cask_18000_doe_9470_tr.out
07/16/2007  08:04a           5,172,523 cask_18000_doe_9470_tr.parm
07/16/2007  08:04a               6,159 crcf_matprops2.dat
09/11/2007  02:15p              21,857 get_max_temps.inp
09/11/2007  02:56p             364,071 get_max_temps.out
07/16/2007  08:04a                 764 runfile_all
07/16/2007  08:04a                 277 runfile_ic
07/16/2007  08:04a                 220 runfile_temps
07/16/2007  08:04a                 265 runfile_tr
              14 File(s)     11,574,219 bytes

 Directory of D:\CRCF_3D_ANSYS_OFFNORM\CRCF_1019-1021\25000

09/29/2007  10:07a      <DIR>          .
09/22/2007  07:51a      <DIR>          ..
07/16/2007  08:04a              61,066 cask_25000_doe_9470_ic-c.inp
07/16/2007  08:04a             314,853 cask_25000_doe_9470_ic-c.out
07/16/2007  08:04a           5,172,487 cask_25000_doe_9470_ic-c.parm
09/29/2007  10:07a              83,456 cask_25000_doe_9470_peak_temps_tr.xls
07/16/2007  08:04a              49,893 cask_25000_doe_9470_tr.inp
07/16/2007  08:04a             326,328 cask_25000_doe_9470_tr.out
07/16/2007  08:04a           5,172,523 cask_25000_doe_9470_tr.parm
07/16/2007  08:04a               6,159 crcf_matprops2.dat
09/11/2007  02:16p              21,857 get_max_temps.inp
09/11/2007  03:06p             364,071 get_max_temps.out
07/16/2007  08:04a                 764 runfile_all
07/16/2007  08:04a                 277 runfile_ic
07/16/2007  08:04a                 220 runfile_temps
07/16/2007  08:04a                 265 runfile_tr
              14 File(s)     11,574,219 bytes

 Directory of D:\CRCF_3D_ANSYS_OFFNORM\CRCF_1019-1021\30000

09/29/2007  10:08a      <DIR>          .
09/22/2007  07:51a      <DIR>          ..
07/12/2007  10:32a              61,066 cask_30000_doe_9470_ic-c.inp
07/12/2007  10:32a             314,869 cask_30000_doe_9470_ic-c.out
07/12/2007  10:32a           5,172,487 cask_30000_doe_9470_ic-c.parm
09/29/2007  10:08a              82,944 cask_30000_doe_9470_peak_temps_tr.xls
07/12/2007  10:32a              49,893 cask_30000_doe_9470_tr.inp
```

```
07/12/2007  10:32a            326,328 cask_30000_doe_9470_tr.out
07/12/2007  10:32a          5,172,523 cask_30000_doe_9470_tr.parm
07/12/2007  10:32a              6,159 crcf_matprops2.dat
09/11/2007  02:16p             21,857 get_max_temps.inp
09/11/2007  03:16p            364,071 get_max_temps.out
07/12/2007  10:32a                544 runfile_both
07/12/2007  10:32a                277 runfile_ic
07/13/2007  01:55p                220 runfile_temps
07/12/2007  10:32a                265 runfile_tr
              14 File(s)     11,573,503 bytes

 Directory of D:\CRCF_3D_ANSYS_OFFNORM\CRCF_1022-1023

09/22/2007  07:46a      <DIR>          .
09/22/2007  06:57a      <DIR>          ..
09/29/2007  10:10a      <DIR>          09470_11800
09/29/2007  10:11a      <DIR>          09470_30000
09/29/2007  10:11a      <DIR>          11800_11800
09/29/2007  10:12a      <DIR>          18000_18000
09/29/2007  10:13a      <DIR>          25000_25000
09/29/2007  10:14a      <DIR>          30000_30000
               0 File(s)              0 bytes

 Directory of D:\CRCF_3D_ANSYS_OFFNORM\CRCF_1022-1023\09470_11800

09/29/2007  10:10a      <DIR>          .
09/22/2007  07:46a      <DIR>          ..
09/06/2007  09:10a             47,242 cask_09_tad_11_ic-c.inp
09/06/2007  09:10a            275,640 cask_09_tad_11_ic-c.out
09/06/2007  09:10a          6,533,587 cask_09_tad_11_ic-c.parm
09/29/2007  10:10a             75,264 cask_09_tad_11_peak_temps_tr.xls
09/06/2007  09:10a             37,893 cask_09_tad_11_tr.inp
09/06/2007  09:10a            289,625 cask_09_tad_11_tr.out
09/06/2007  09:10a          6,533,623 cask_09_tad_11_tr.parm
09/06/2007  09:10a              4,826 crcf_matprops.dat
09/11/2007  03:34p             12,235 get_max_temps.inp
09/11/2007  03:34p            198,472 get_max_temps.out
09/06/2007  09:10a                714 runfile_all
09/06/2007  09:10a                250 runfile_ic
09/06/2007  09:10a                220 runfile_temps
09/06/2007  09:10a                240 runfile_tr
              14 File(s)     14,009,831 bytes

 Directory of D:\CRCF_3D_ANSYS_OFFNORM\CRCF_1022-1023\09470_30000

09/29/2007  10:11a      <DIR>          .
09/22/2007  07:46a      <DIR>          ..
09/09/2007  07:56a             47,240 cask_09_tad_30_ic-c.inp
09/09/2007  07:56a            275,931 cask_09_tad_30_ic-c.out
09/09/2007  07:56a          6,533,587 cask_09_tad_30_ic-c.parm
09/29/2007  10:11a             75,264 cask_09_tad_30_peak_temps_tr.xls
09/09/2007  07:56a             37,891 cask_09_tad_30_tr.inp
09/09/2007  07:56a            290,924 cask_09_tad_30_tr.out
09/09/2007  07:56a          6,533,623 cask_09_tad_30_tr.parm
09/09/2007  07:56a              4,826 crcf_matprops.dat
09/11/2007  03:32p             12,235 get_max_temps.inp
09/11/2007  03:32p            198,475 get_max_temps.out
09/09/2007  07:56a                714 runfile_all
09/09/2007  07:56a                250 runfile_ic
09/09/2007  07:56a                220 runfile_temps
09/09/2007  07:56a                240 runfile_tr
              14 File(s)     14,011,420 bytes
```

```
 Directory of D:\CRCF_3D_ANSYS_OFFNORM\CRCF_1022-1023\11800_11800

09/29/2007  10:11a      <DIR>          .
09/22/2007  07:46a      <DIR>          ..
07/17/2007  06:33a              47,236 cask_11_tad_11_ic-c.inp
07/17/2007  06:33a             275,636 cask_11_tad_11_ic-c.out
07/17/2007  06:33a           6,533,587 cask_11_tad_11_ic-c.parm
09/29/2007  10:11a              75,264 cask_11_tad_11_peak_temps_tr.xls
07/17/2007  06:33a              37,845 cask_11_tad_11_tr.inp
07/17/2007  06:33a             289,581 cask_11_tad_11_tr.out
07/17/2007  06:33a           6,533,623 cask_11_tad_11_tr.parm
07/17/2007  06:33a               4,826 crcf_matprops.dat
09/11/2007  03:34p              12,235 get_max_temps.inp
09/11/2007  03:34p             198,472 get_max_temps.out
07/17/2007  06:33a                 714 runfile_all
07/17/2007  06:33a                 250 runfile_ic
07/17/2007  06:33a                 220 runfile_temps
07/17/2007  06:33a                 240 runfile_tr
              14 File(s)     14,009,729 bytes

 Directory of D:\CRCF_3D_ANSYS_OFFNORM\CRCF_1022-1023\18000_18000

09/29/2007  10:12a      <DIR>          .
09/22/2007  07:46a      <DIR>          ..
07/16/2007  08:06a              47,232 cask_18_tad_18_ic-c.inp
07/16/2007  08:06a             275,632 cask_18_tad_18_ic-c.out
07/16/2007  08:06a           6,533,587 cask_18_tad_18_ic-c.parm
09/29/2007  10:12a              75,776 cask_18_tad_18_peak_temps_tr.xls
07/16/2007  08:06a              37,841 cask_18_tad_18_tr.inp
07/16/2007  08:06a             289,865 cask_18_tad_18_tr.out
07/16/2007  08:06a           6,533,623 cask_18_tad_18_tr.parm
07/16/2007  08:06a               4,826 crcf_matprops.dat
09/11/2007  03:35p              12,235 get_max_temps.inp
09/11/2007  03:35p             198,472 get_max_temps.out
07/16/2007  08:06a                 714 runfile_all
07/16/2007  08:06a                 252 runfile_ic
07/16/2007  08:06a                 220 runfile_temps
07/16/2007  08:06a                 240 runfile_tr
              14 File(s)     14,010,515 bytes

 Directory of D:\CRCF_3D_ANSYS_OFFNORM\CRCF_1022-1023\25000_25000

09/29/2007  10:13a      <DIR>          .
09/22/2007  07:46a      <DIR>          ..
07/16/2007  08:05a              47,232 cask_25_tad_25_ic-c.inp
07/16/2007  08:05a             275,776 cask_25_tad_25_ic-c.out
07/16/2007  08:05a           6,533,587 cask_25_tad_25_ic-c.parm
09/29/2007  10:13a              75,264 cask_25_tad_25_peak_temps_tr.xls
07/16/2007  08:05a              37,841 cask_25_tad_25_tr.inp
07/16/2007  08:05a             290,585 cask_25_tad_25_tr.out
07/16/2007  08:05a           6,533,623 cask_25_tad_25_tr.parm
07/16/2007  08:05a               4,826 crcf_matprops.dat
09/11/2007  03:36p              12,235 get_max_temps.inp
09/11/2007  03:36p             198,472 get_max_temps.out
07/16/2007  08:05a                 714 runfile_all
07/16/2007  08:05a                 252 runfile_ic
07/16/2007  08:05a                 220 runfile_temps
07/16/2007  08:05a                 240 runfile_tr
              14 File(s)     14,010,867 bytes

 Directory of D:\CRCF_3D_ANSYS_OFFNORM\CRCF_1022-1023\30000_30000

09/29/2007  10:14a      <DIR>          .
```

```
09/22/2007  07:46a      <DIR>          ..
07/13/2007  01:59p              47,232 cask_30_tad_30_ic-c.inp
07/13/2007  01:59p             275,923 cask_30_tad_30_ic-c.out
07/13/2007  01:59p           6,533,587 cask_30_tad_30_ic-c.parm
09/29/2007  10:14a              75,264 cask_30_tad_30_peak_temps_tr.xls
07/13/2007  01:59p              37,841 cask_30_tad_30_tr.inp
07/13/2007  01:59p             291,164 cask_30_tad_30_tr.out
07/13/2007  01:59p           6,533,623 cask_30_tad_30_tr.parm
07/13/2007  01:59p               4,826 crcf_matprops.dat
09/11/2007  03:33p              12,235 get_max_temps.inp
09/11/2007  03:33p             198,475 get_max_temps.out
07/13/2007  01:59p                 494 runfile_both
07/13/2007  01:59p                 252 runfile_ic
07/13/2007  01:59p                 220 runfile_temps
07/13/2007  01:59p                 240 runfile_tr
              14 File(s)     14,011,376 bytes

 Directory of D:\CRCF_3D_FLUENT_ITS_EXH

09/22/2007  06:57a      <DIR>          .
10/01/2007  10:46a      <DIR>          ..
09/21/2007  02:47p      <DIR>          CRCF_1019-1021_ITS_EXH
09/21/2007  03:05p      <DIR>          CRCF_1022-1023_ITS_EXH
               0 File(s)              0 bytes

 Directory of D:\CRCF_3D_FLUENT_ITS_EXH\CRCF_1019-1021_ITS_EXH

09/21/2007  02:47p      <DIR>          .
09/22/2007  06:57a      <DIR>          ..
09/21/2007  02:50p      <DIR>          09470
09/21/2007  02:55p      <DIR>          11800
09/21/2007  02:57p      <DIR>          18000
09/21/2007  02:59p      <DIR>          25000
09/21/2007  03:02p      <DIR>          30000
09/21/2007  02:52p      <DIR>          FLOW
               0 File(s)              0 bytes

 Directory of D:\CRCF_3D_FLUENT_ITS_EXH\CRCF_1019-1021_ITS_EXH\09470

09/21/2007  02:50p      <DIR>          .
09/21/2007  02:47p      <DIR>          ..
09/05/2007  10:54a                 666 cans_max_fuel_temp_exh_1021_09470.trn
09/05/2007  10:52a               1,962 cans_max_surf_temp_exh_1021_09470.trn
09/05/2007  10:40a                 504 conc_clg_max_surf_temp_exh_1021_09470.trn
09/05/2007  10:42a                 450 conc_e_max_surf_temp_exh_1021_09470.trn
09/05/2007  10:46a                 504 conc_flr_max_surf_temp_exh_1021_09470.trn
09/05/2007  10:48a                 990 conc_max_surf_temp_exh_1019_09470.trn
09/05/2007  10:41a                 450 conc_n_max_surf_temp_exh_1021_09470.trn
09/05/2007  10:43a                 342 conc_s_max_surf_temp_exh_1021_09470.trn
09/05/2007  10:44a                 450 conc_w_max_surf_temp_exh_1021_09470.trn
09/05/2007  10:38a          51,353,238 crcf_1019_1021_exh_09470_3057.cas
09/05/2007  06:43a         151,865,173 crcf_1019_1021_exh_09470_3057.dat
09/05/2007  06:48a                 930 energy_balance_exh_1019_09470.trn
09/05/2007  06:55a               1,900 energy_balance_exh_1021_09470.trn
09/05/2007  07:08a               1,207 hlw1_heat_trans_exh_1021_09470.trn
09/05/2007  07:09a               1,208 hlw2_heat_trans_exh_1021_09470.trn
09/05/2007  07:10a               1,206 hlw3_heat_trans_exh_1021_09470.trn
09/05/2007  07:11a               1,205 hlw4_heat_trans_exh_1021_09470.trn
09/05/2007  07:12a               1,206 hlw5_heat_trans_exh_1021_09470.trn
09/05/2007  07:07a               1,196 snf_heat_trans_exh_1021_09470.trn
09/05/2007  07:06a                 985 tube_heat_trans_exh_1019_09470.trn
09/05/2007  10:49a                 504 tube_max_surf_temp_exh_1019_09470.trn
              21 File(s)    203,236,276 bytes
```

```
 Directory of D:\CRCF_3D_FLUENT_ITS_EXH\CRCF_1019-1021_ITS_EXH\11800

09/21/2007  02:55p      <DIR>          .
09/21/2007  02:47p      <DIR>          ..
09/05/2007  09:22a                666 cans_max_fuel_temp_exh_1021_11800.trn
09/05/2007  09:20a              1,962 cans_max_surf_temp_exh_1021_11800.trn
09/05/2007  09:07a                504 conc_clg_max_surf_temp_exh_1021_11800.trn
09/05/2007  09:12a                450 conc_e_max_surf_temp_exh_1021_11800.trn
09/05/2007  09:16a                504 conc_flr_max_surf_temp_exh_1021_11800.trn
09/05/2007  09:18a                990 conc_max_surf_temp_exh_1019_11800.trn
09/05/2007  09:09a                450 conc_n_max_surf_temp_exh_1021_11800.trn
09/05/2007  09:13a                342 conc_s_max_surf_temp_exh_1021_11800.trn
09/05/2007  09:15a                450 conc_w_max_surf_temp_exh_1021_11800.trn
09/05/2007  09:04a         51,353,238 crcf_1019_1021_exh_11800_2360.cas
09/02/2007  08:16a        151,798,261 crcf_1019_1021_exh_11800_2360.dat
09/02/2007  08:16a                934 energy_balance_exh_1019_11800.trn
09/02/2007  08:20a              1,903 energy_balance_exh_1021_11800.trn
09/02/2007  08:23a              1,208 hlw1_heat_trans_exh_1021_11800.trn
09/02/2007  08:24a              1,208 hlw2_heat_trans_exh_1021_11800.trn
09/02/2007  08:24a              1,208 hlw3_heat_trans_exh_1021_11800.trn
09/02/2007  08:25a              1,206 hlw4_heat_trans_exh_1021_11800.trn
09/02/2007  08:26a              1,207 hlw5_heat_trans_exh_1021_11800.trn
09/02/2007  08:22a              1,195 snf_heat_trans_exh_1021_11800.trn
09/02/2007  08:21a                984 tube_heat_trans_exh_1019_11800.trn
09/05/2007  09:19a                504 tube_max_surf_temp_exh_1019_11800.trn
              21 File(s)    203,169,374 bytes

 Directory of D:\CRCF_3D_FLUENT_ITS_EXH\CRCF_1019-1021_ITS_EXH\18000

09/21/2007  02:57p      <DIR>          .
09/21/2007  02:47p      <DIR>          ..
09/05/2007  09:44a                666 cans_max_fuel_temp_exh_1021_18000.trn
09/05/2007  09:43a              1,962 cans_max_surf_temp_exh_1021_18000.trn
09/05/2007  09:31a                504 conc_clg_max_surf_temp_exh_1021_18000.trn
09/05/2007  09:34a                450 conc_e_max_surf_temp_exh_1021_18000.trn
09/05/2007  09:37a                504 conc_flr_max_surf_temp_exh_1021_18000.trn
09/05/2007  09:40a                990 conc_max_surf_temp_exh_1019_18000.trn
09/05/2007  09:33a                450 conc_n_max_surf_temp_exh_1021_18000.trn
09/05/2007  09:35a                342 conc_s_max_surf_temp_exh_1021_18000.trn
09/05/2007  09:36a                450 conc_w_max_surf_temp_exh_1021_18000.trn
09/05/2007  09:45a         51,353,638 crcf_1019_1021_exh_18000_3168.cas
09/04/2007  06:38a        151,875,829 crcf_1019_1021_exh_18000_3168.dat
09/04/2007  06:39a                932 energy_balance_exh_1019_18000.trn
09/04/2007  06:42a              1,907 energy_balance_exh_1021_18000.trn
09/04/2007  06:46a              1,208 hlw1_heat_trans_exh_1021_18000.trn
09/04/2007  06:47a              1,207 hlw2_heat_trans_exh_1021_18000.trn
09/04/2007  06:48a              1,206 hlw3_heat_trans_exh_1021_18000.trn
09/04/2007  06:50a              1,207 hlw4_heat_trans_exh_1021_18000.trn
09/04/2007  06:51a              1,678 hlw5_heat_trans_exh_1021_18000.trn
09/04/2007  06:45a              1,198 snf_heat_trans_exh_1021_18000.trn
09/04/2007  06:44a                984 tube_heat_trans_exh_1019_18000.trn
09/05/2007  09:41a                504 tube_max_surf_temp_exh_1019_18000.trn
              21 File(s)    203,247,816 bytes

 Directory of D:\CRCF_3D_FLUENT_ITS_EXH\CRCF_1019-1021_ITS_EXH\25000

09/21/2007  02:59p      <DIR>          .
09/21/2007  02:47p      <DIR>          ..
09/05/2007  10:31a                666 cans_max_fuel_temp_exh_1021_25000.trn
09/05/2007  10:28a              1,962 cans_max_surf_temp_exh_1021_25000.trn
09/05/2007  09:55a                504 conc_clg_max_surf_temp_exh_1021_25000.trn
09/05/2007  09:58a                450 conc_e_max_surf_temp_exh_1021_25000.trn
```

```
09/05/2007  10:02a                504 conc_flr_max_surf_temp_exh_1021_25000.trn
09/05/2007  10:23a                990 conc_max_surf_temp_exh_1019_25000.trn
09/05/2007  09:57a                450 conc_n_max_surf_temp_exh_1021_25000.trn
09/05/2007  09:58a                342 conc_s_max_surf_temp_exh_1021_25000.trn
09/05/2007  10:00a                450 conc_w_max_surf_temp_exh_1021_25000.trn
09/05/2007  09:55a         51,353,279 crcf_1019_1021_exh_25000_3994.cas
09/04/2007  05:41p        151,955,125 crcf_1019_1021_exh_25000_3994.dat
09/04/2007  05:43p                933 energy_balance_exh_1019_25000.trn
09/04/2007  05:44p              1,898 energy_balance_exh_1021_25000.trn
09/04/2007  05:46p              1,208 hlw1_heat_trans_exh_1021_25000.trn
09/04/2007  05:47p              1,206 hlw2_heat_trans_exh_1021_25000.trn
09/04/2007  05:47p              1,206 hlw3_heat_trans_exh_1021_25000.trn
09/04/2007  05:48p              1,205 hlw4_heat_trans_exh_1021_25000.trn
09/04/2007  05:49p              1,283 hlw5_heat_trans_exh_1021_25000.trn
09/04/2007  05:45p              1,195 snf_heat_trans_exh_1021_25000.trn
09/04/2007  05:45p                986 tube_heat_trans_exh_1019_25000.trn
09/05/2007  10:26a                504 tube_max_surf_temp_exh_1019_25000.trn
              21 File(s)    203,326,346 bytes

 Directory of D:\CRCF_3D_FLUENT_ITS_EXH\CRCF_1019-1021_ITS_EXH\30000

09/21/2007  03:02p      <DIR>          .
09/21/2007  02:47p      <DIR>          ..
09/19/2007  09:16a                342 avg_air_temp_exh_1019_30000.trn
09/19/2007  09:15a                342 avg_air_temp_exh_1021_30000.trn
09/19/2007  09:16a              1,226 avg_in_out_temp_exh_1021_30000.trn
09/05/2007  08:27a                666 cans_max_fuel_temp_exh_1021_30000.trn
09/05/2007  08:24a              1,962 cans_max_surf_temp_exh_1021_30000.trn
09/05/2007  08:02a                504 conc_clg_max_surf_temp_exh_1021_30000.trn
09/05/2007  08:08a                450 conc_e_max_surf_temp_exh_1021_30000.trn
09/05/2007  08:16a                504 conc_flr_max_surf_temp_exh_1021_30000.trn
09/05/2007  08:18a                990 conc_max_surf_temp_exh_1019_30000.trn
09/05/2007  08:06a                450 conc_n_max_surf_temp_exh_1021_30000.trn
09/05/2007  08:10a                342 conc_s_max_surf_temp_exh_1021_30000.trn
09/05/2007  08:13a                450 conc_w_max_surf_temp_exh_1021_30000.trn
09/05/2007  07:53a         51,353,497 crcf_1019_1021_exh_30000_4785.cas
09/05/2007  06:39a        152,031,061 crcf_1019_1021_exh_30000_4785.dat
09/19/2007  09:11a         51,354,159 crcf_1019_1021_exh_30000_4785_s.cas
09/19/2007  09:11a        152,033,430 crcf_1019_1021_exh_30000_4785_s.dat
09/05/2007  06:42a                933 energy_balance_exh_1019_30000.trn
09/05/2007  06:49a              1,904 energy_balance_exh_1021_30000.trn
09/05/2007  06:56a              1,205 hlw1_heat_trans_exh_1021_30000.trn
09/05/2007  06:57a              1,207 hlw2_heat_trans_exh_1021_30000.trn
09/05/2007  06:59a              1,207 hlw3_heat_trans_exh_1021_30000.trn
09/05/2007  07:00a              1,208 hlw4_heat_trans_exh_1021_30000.trn
09/05/2007  07:01a              1,205 hlw5_heat_trans_exh_1021_30000.trn
09/05/2007  06:53a              1,197 snf_heat_trans_exh_1021_30000.trn
09/05/2007  06:53a                985 tube_heat_trans_exh_1019_30000.trn
09/05/2007  08:20a                504 tube_max_surf_temp_exh_1019_30000.trn
              26 File(s)    406,791,930 bytes

 Directory of D:\CRCF_3D_FLUENT_ITS_EXH\CRCF_1019-1021_ITS_EXH\FLOW

09/21/2007  02:52p      <DIR>          .
09/21/2007  02:47p      <DIR>          ..
08/31/2007  09:32a         51,988,860 crcf_1019_1021_flow_exh_1443.cas
08/31/2007  09:32a        158,264,737 crcf_1019_1021_flow_exh_1443.dat
08/31/2007  09:40a              1,011 mass_balance_1019_1021_flow_exh.trn
               3 File(s)    210,254,608 bytes

 Directory of D:\CRCF_3D_FLUENT_ITS_EXH\CRCF_1022-1023_ITS_EXH

09/21/2007  03:05p      <DIR>          .
```

```
09/22/2007  06:57a      <DIR>          ..
09/21/2007  03:07p      <DIR>          09470_11800
09/21/2007  03:08p      <DIR>          09470_30000
09/21/2007  03:13p      <DIR>          11800_11800
09/21/2007  03:16p      <DIR>          18000_18000
09/21/2007  03:30p      <DIR>          25000_25000
09/21/2007  03:32p      <DIR>          30000_30000
09/21/2007  03:11p      <DIR>          FLOW
               0 File(s)              0 bytes

 Directory of D:\CRCF_3D_FLUENT_ITS_EXH\CRCF_1022-1023_ITS_EXH\09470_11800

09/21/2007  03:07p      <DIR>          .
09/21/2007  03:05p      <DIR>          ..
08/30/2007  02:46p                 504 conc_clg_max_surf_temp_exh_1022_09470.trn
08/30/2007  02:41p                 504 conc_e_max_surf_temp_exh_1022_09470.trn
08/30/2007  02:43p                 504 conc_flr_max_surf_temp_exh_1022_09470.trn
09/04/2007  02:22p                 882 conc_max_surf_temp_exh_1023_09470.trn
08/30/2007  02:37p                 342 conc_n_max_surf_temp_exh_1022_09470.trn
08/30/2007  02:39p                 450 conc_s_max_surf_temp_exh_1022_09470.trn
08/30/2007  02:37p                 450 conc_w_max_surf_temp_exh_1022_09470.trn
08/30/2007  01:43p          39,725,140 crcf_1022_1023_exh_09470_2698.cas
08/30/2007  01:34p         113,317,920 crcf_1022_1023_exh_09470_2698.dat
08/30/2007  01:37p                 750 energy_balance_exh_1022_09470.trn
08/30/2007  01:39p                 831 energy_balance_exh_1023_09470.trn
08/30/2007  01:42p               1,193 tad_heat_trans_exh_1022_09470.trn
08/30/2007  02:32p                 342 tad_max_clad_temp_exh_1022_09470.trn
08/30/2007  02:33p                 612 tad_max_surf_temp_exh_1022_09470.trn
08/30/2007  01:40p                 982 tube_heat_trans_exh_1023_09470.trn
08/30/2007  02:30p                 504 tube_max_surf_temp_exh_1023_09470.trn
              16 File(s)    153,051,910 bytes

 Directory of D:\CRCF_3D_FLUENT_ITS_EXH\CRCF_1022-1023_ITS_EXH\09470_30000

09/21/2007  03:08p      <DIR>          .
09/21/2007  03:05p      <DIR>          ..
09/09/2007  07:38a                 504 conc_clg_max_surf_temp_exh_1022_09470-30.trn
09/09/2007  07:36a                 504 conc_e_max_surf_temp_exh_1022_09470-30.trn
09/09/2007  07:37a                 504 conc_flr_max_surf_temp_exh_1022_09470-30.trn
09/09/2007  07:39a                 882 conc_max_surf_temp_exh_1023_09470-30.trn
09/09/2007  07:33a                 342 conc_n_max_surf_temp_exh_1022_09470-30.trn
09/09/2007  07:34a                 450 conc_s_max_surf_temp_exh_1022_09470-30.trn
09/09/2007  07:34a                 450 conc_w_max_surf_temp_exh_1022_09470-30.trn
09/09/2007  07:11a          39,725,143 crcf_1022_1023_exh_09470-30_3737.cas
09/09/2007  07:12a         113,417,664 crcf_1022_1023_exh_09470-30_3737.dat
09/09/2007  07:25a                 749 engergy_balance_exh_1022_09470-30.trn
09/09/2007  07:26a                 830 engergy_balance_exh_1023_09470-30.trn
09/09/2007  07:23a               1,188 tad_heat_trans_exh_1022_09470-30.trn
09/09/2007  07:31a                 342 tad_max_clad_temp_exh_1022_09470-30.trn
09/09/2007  07:30a                 612 tad_max_surf_temp_exh_1022_09470-30.trn
09/09/2007  07:24a                 983 tube_heat_trans_exh_1023_09470-30.trn
09/09/2007  07:28a                 504 tube_max_surf_temp_exh_1023_09470-30.trn
              16 File(s)    153,151,651 bytes

 Directory of D:\CRCF_3D_FLUENT_ITS_EXH\CRCF_1022-1023_ITS_EXH\11800_11800

09/21/2007  03:13p      <DIR>          .
09/21/2007  03:05p      <DIR>          ..
09/19/2007  07:41a                 342 avg_air_temp_exh_1022_11800.trn
09/19/2007  07:42a                 342 avg_air_temp_exh_1023_11800.trn
09/19/2007  07:46a               1,226 avg_in_out_temp_exh_11800.trn
08/29/2007  01:18p                 504 conc_clg_max_surf_temp_exh_1022_11800.trn
08/29/2007  01:13p                 504 conc_e_max_surf_temp_exh_1022_11800.trn
```

```
08/29/2007  01:16p                504 conc_flr_max_surf_temp_exh_1022_11800.trn
09/04/2007  02:07p                882 conc_max_surf_temp_exh_1023_11800.trn
08/29/2007  11:28a                342 conc_n_max_surf_temp_exh_1022_11800.trn
08/29/2007  01:11p                450 conc_s_max_surf_temp_exh_1022_11800.trn
08/29/2007  11:29a                450 conc_w_max_surf_temp_exh_1022_11800.trn
08/21/2007  06:40a         39,725,157 crcf_1022_1023_exh_11800_2130.cas
08/21/2007  06:40a        113,263,392 crcf_1022_1023_exh_11800_2130.dat
09/19/2007  08:25a         39,726,220 crcf_1022_1023_exh_11800_2130_s.cas
09/19/2007  08:25a        113,265,799 crcf_1022_1023_exh_11800_2130_s.dat
08/21/2007  06:35a                752 energy_balance_1022_11800.trn
08/21/2007  06:40a                828 energy_balance_1023_11800.trn
08/21/2007  06:47a              1,662 tad_heat_trans_1022_11800.trn
08/29/2007  11:25a                342 tad_max_clad_temp_exh_1022_11800.trn
08/29/2007  11:22a                612 tad_max_surf_temp_exh_1022_11800.trn
08/21/2007  06:45a                984 tube_heat_trans_1023_11800.trn
08/29/2007  11:13a              1,071 tube_max_surf_temp_exh_1023_11800.trn
              21 File(s)    305,992,365 bytes

 Directory of D:\CRCF_3D_FLUENT_ITS_EXH\CRCF_1022-1023_ITS_EXH\18000_18000

09/21/2007  03:16p      <DIR>          .
09/21/2007  03:05p      <DIR>          ..
09/19/2007  07:54a                342 avg_air_temp_exh_1022_18000.trn
09/19/2007  07:53a                520 avg_air_temp_exh_1023_18000.trn
09/19/2007  07:55a              1,226 avg_in_out_temp_exh_18000.trn
08/29/2007  02:06p                504 conc_clg_max_surf_temp_exh_1022_18000.trn
08/29/2007  02:01p                504 conc_e_max_surf_temp_exh_1022_18000.trn
08/29/2007  02:03p                504 conc_flr_max_surf_temp_exh_1022_18000.trn
09/04/2007  02:10p                882 conc_max_surf_temp_exh_1023_18000.trn
08/29/2007  01:51p                342 conc_n_max_surf_temp_exh_1022_18000.trn
08/29/2007  01:59p                450 conc_s_max_surf_temp_exh_1022_18000.trn
08/30/2007  10:09a                450 conc_w_max_surf_temp_exh_1022_18000.trn
08/21/2007  03:39p         39,725,211 crcf_1022_1023_exh_18000_3026.cas
08/21/2007  03:39p        113,349,408 crcf_1022_1023_exh_18000_3026.dat
09/19/2007  08:28a         39,726,132 crcf_1022_1023_exh_18000_3026_s.cas
09/19/2007  08:28a        113,351,815 crcf_1022_1023_exh_18000_3026_s.dat
08/21/2007  03:31p                750 energy_balance_1022_18000.trn
08/21/2007  03:33p                828 energy_balance_1023_18000.trn
08/21/2007  03:38p              1,194 tad_heat_trans_1022_18000.trn
08/29/2007  01:49p                342 tad_max_clad_temp_exh_1022_18000.trn
08/29/2007  01:50p                612 tad_max_surf_temp_exh_1022_18000.trn
08/21/2007  03:35p              1,454 tube_heat_trans_1023_18000.trn
08/29/2007  01:46p                504 tube_max_surf_temp_exh_1023_18000.trn
              21 File(s)    306,163,974 bytes

 Directory of D:\CRCF_3D_FLUENT_ITS_EXH\CRCF_1022-1023_ITS_EXH\25000_25000

09/21/2007  03:30p      <DIR>          .
09/21/2007  03:05p      <DIR>          ..
09/19/2007  08:01a                342 avg_air_temp_exh_1022_25000.trn
09/19/2007  07:59a                342 avg_air_temp_exh_1023_25000.trn
09/19/2007  08:02a              1,226 avg_in_out_temp_exh_25000.trn
08/29/2007  03:09p                504 conc_clg_max_surf_temp_exh_1022_25000.trn
08/29/2007  03:05p                504 conc_e_max_surf_temp_exh_1022_25000.trn
08/29/2007  03:08p                504 conc_flr_max_surf_temp_exh_1022_25000.trn
09/04/2007  02:12p                882 conc_max_surf_temp_exh_1023_25000.trn
08/29/2007  02:59p                342 conc_n_max_surf_temp_exh_1022_25000.trn
08/29/2007  03:03p                450 conc_s_max_surf_temp_exh_1022_25000.trn
08/29/2007  03:01p                450 conc_w_max_surf_temp_exh_1022_25000.trn
08/22/2007  06:26a         39,725,163 crcf_1022_1023_exh_25000_3957.cas
08/22/2007  06:26a        113,438,784 crcf_1022_1023_exh_25000_3957.dat
09/19/2007  08:31a         39,726,115 crcf_1022_1023_exh_25000_3957_s.cas
09/19/2007  08:31a        113,441,191 crcf_1022_1023_exh_25000_3957_s.dat
```

```
08/22/2007  06:22a                751 energy_balance_1022_25000.trn
08/22/2007  06:24a                832 energy_balance_1023_25000.trn
08/22/2007  06:26a              1,193 tad_heat_trans_1022_25000.trn
08/29/2007  02:54p                342 tad_max_clad_temp_exh_1022_25000.trn
08/29/2007  02:57p                612 tad_max_surf_temp_exh_1022_25000.trn
08/22/2007  06:25a                984 tube_heat_trans_1023_25000.trn
08/29/2007  02:27p                504 tube_max_surf_temp_exh_1023_25000.trn
              21 File(s)    306,342,017 bytes

 Directory of D:\CRCF_3D_FLUENT_ITS_EXH\CRCF_1022-1023_ITS_EXH\30000_30000

09/21/2007  03:32p      <DIR>          .
09/21/2007  03:05p      <DIR>          ..
09/19/2007  08:13a                342 avg_air_temp_exh_1022_30000.trn
09/19/2007  08:12a                342 avg_air_temp_exh_1023_30000.trn
09/19/2007  08:16a              1,226 avg_in_out_temp_exh_30000.trn
08/29/2007  03:49p                504 conc_clg_max_surf_temp_exh_1022_30000.trn
08/29/2007  03:43p                504 conc_e_max_surf_temp_exh_1022_30000.trn
08/29/2007  03:45p                504 conc_flr_max_surf_temp_exh_1022_30000.trn
09/04/2007  02:14p                882 conc_max_surf_temp_exh_1023_30000.trn
08/29/2007  03:39p                342 conc_n_max_surf_temp_exh_1022_30000.trn
08/29/2007  03:41p                450 conc_s_max_surf_temp_exh_1022_30000.trn
08/29/2007  03:40p                450 conc_w_max_surf_temp_exh_1022_30000.trn
08/22/2007  03:57p         39,725,166 crcf_1022_1023_exh_30000_4850.cas
08/22/2007  03:57p        113,524,512 crcf_1022_1023_exh_30000_4850.dat
09/19/2007  08:36a         39,726,114 crcf_1022_1023_exh_30000_4850_s.cas
09/19/2007  08:36a        113,526,919 crcf_1022_1023_exh_30000_4850_s.dat
08/23/2007  06:29a                752 energy_balance_1022_30000.trn
08/23/2007  06:31a                832 energy_balance_1023_30000.trn
08/23/2007  06:34a              1,193 tad_heat_trans_1022_30000.trn
08/29/2007  03:32p                342 tad_max_clad_temp_exh_1022_30000.trn
08/29/2007  03:35p                612 tad_max_surf_temp_exh_1022_30000.trn
08/23/2007  06:32a                983 tube_heat_trans_1023_30000.trn
08/29/2007  03:29p                504 tube_max_surf_temp_exh_1023_30000.trn
              21 File(s)    306,513,475 bytes

 Directory of D:\CRCF_3D_FLUENT_ITS_EXH\CRCF_1022-1023_ITS_EXH\FLOW

09/21/2007  03:11p      <DIR>          .
09/21/2007  03:05p      <DIR>          ..
08/20/2007  10:09a         39,724,883 crcf_1022_1023_flow_exh_1109.cas
08/20/2007  10:09a        113,165,376 crcf_1022_1023_flow_exh_1109.dat
08/20/2007  10:08a              1,399 mass_balance_1022-1023_flow_exh.trn
               3 File(s)    152,891,658 bytes

     Total Files Listed:
             557 File(s)  3,312,157,410 bytes
             171 Dir(s)               0 bytes free
```

ATTACHMENT VI

CONCRETE TEMPERATURE HISTORIES, OFF-NORMAL CONDITION, NO FLOW

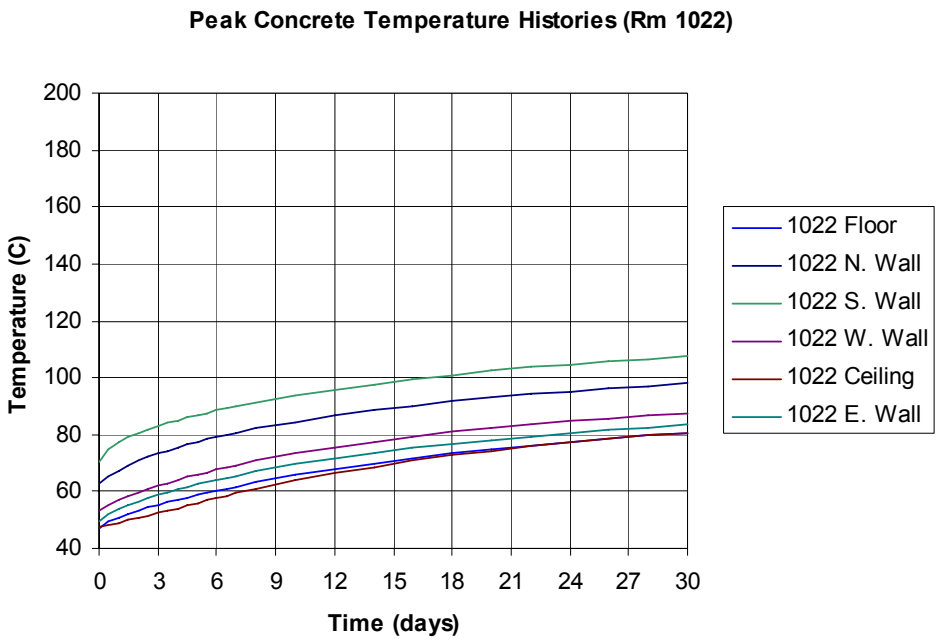

Figure 19. Peak Concrete Temperature Histories (°C) – Room 1022, Off-Normal, No Flow, 11.8 kW

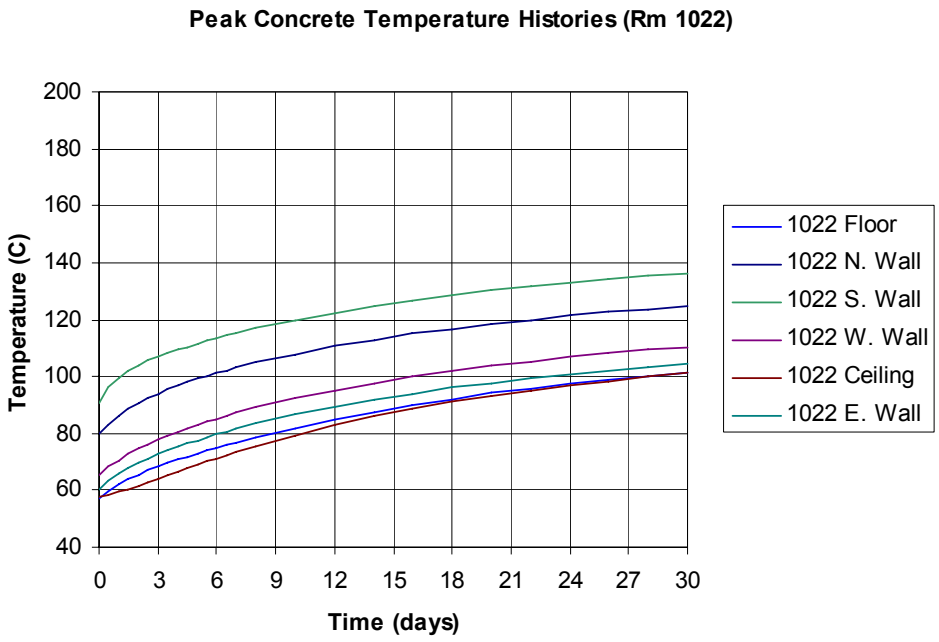

Figure 20. Peak Concrete Temperature Histories (°C) – Room 1022, Off-Normal, No Flow, 18 kW

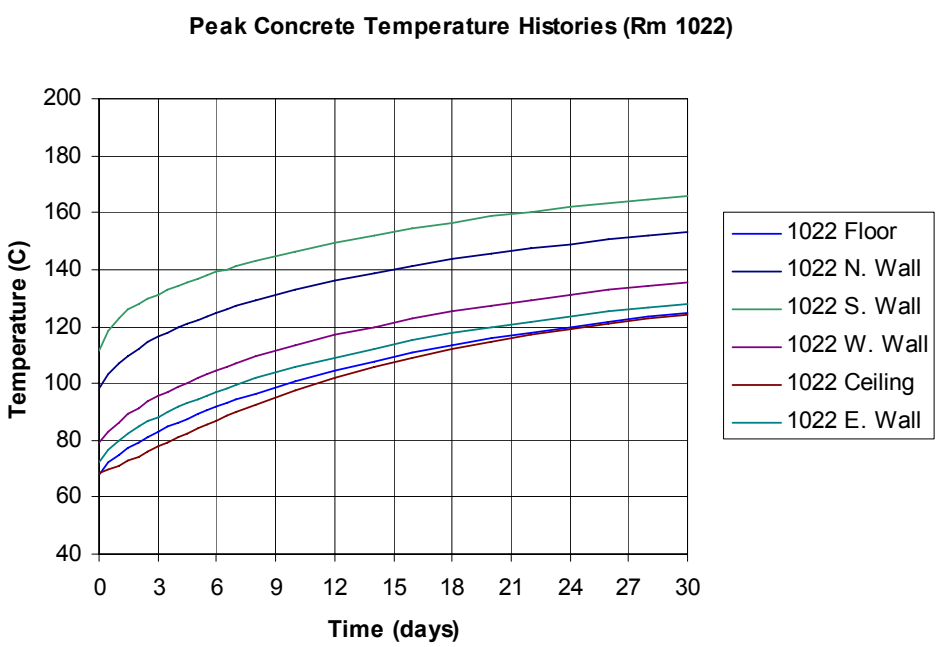

Figure 21. Peak Concrete Temperature Histories (°C) – Room 1022, Off-Normal, No Flow, 25 kW

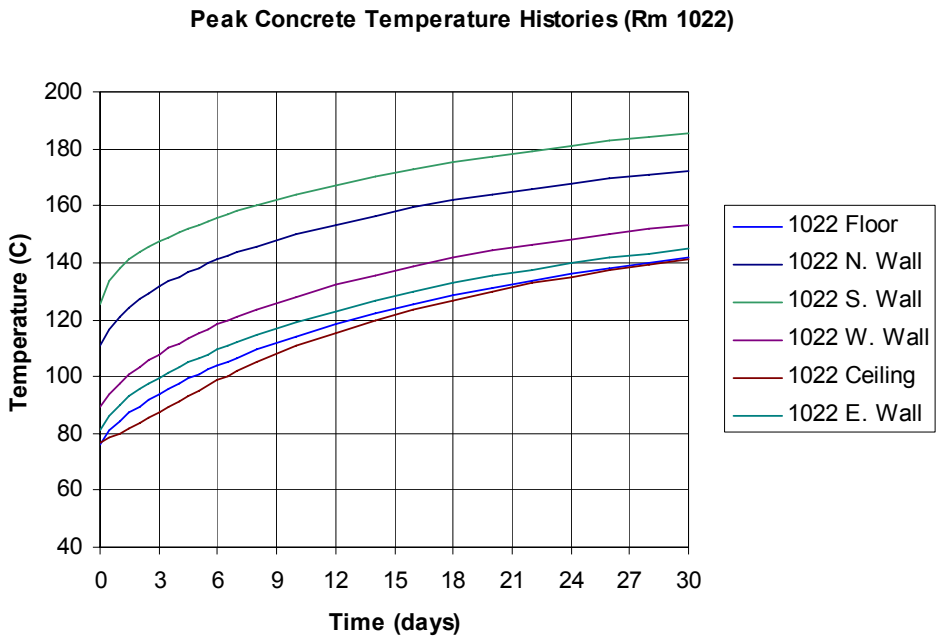

Figure 22. Peak Concrete Temperature Histories (°C) – Room 1022, Off-Normal, No Flow, 30 kW

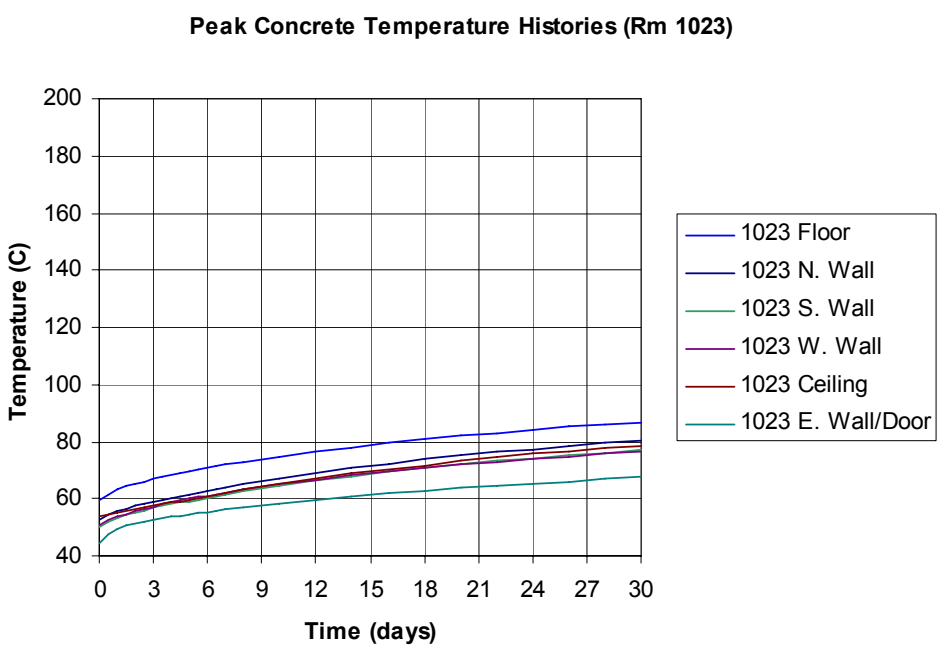

Figure 23. Peak Concrete Temperature Histories (°C) – Room 1023, Off-Normal, No Flow, 11.8 kW

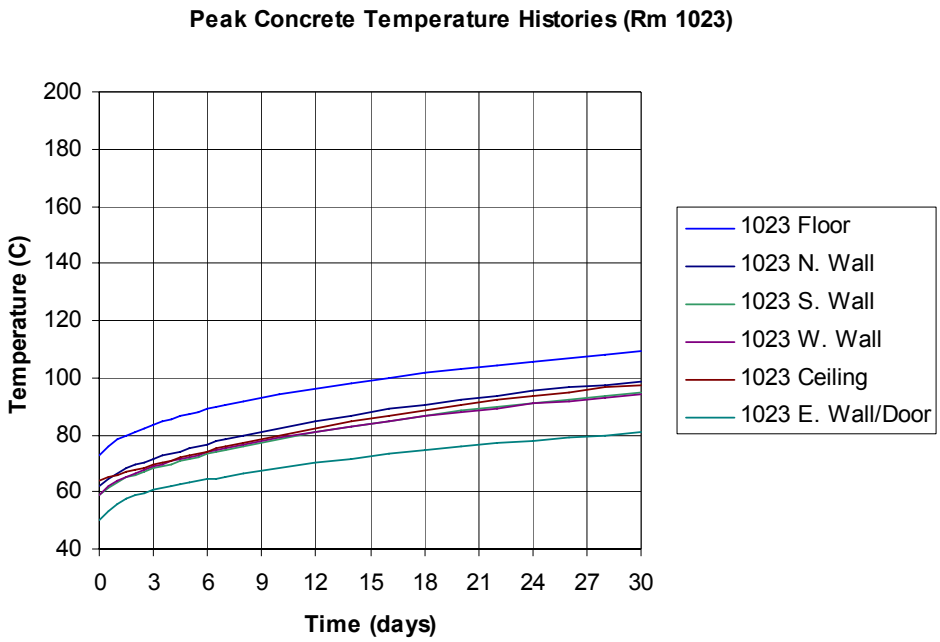

Figure 24. Peak Concrete Temperature Histories (°C) – Room 1023, Off-Normal, No Flow, 18 kW

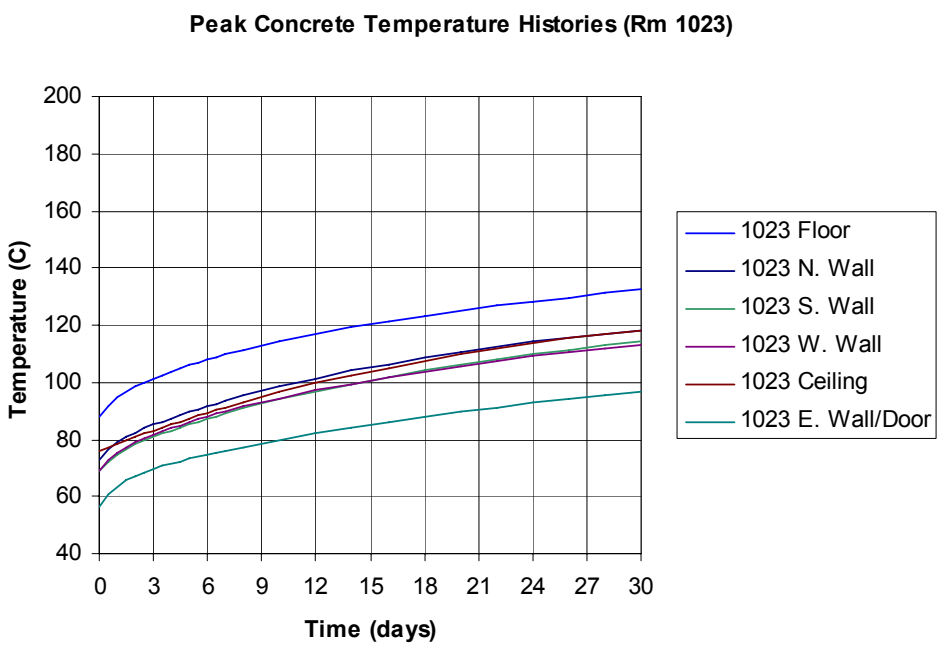

Figure 25. Peak Concrete Temperature Histories (°C) – Room 1023, Off-Normal, No Flow, 25 kW

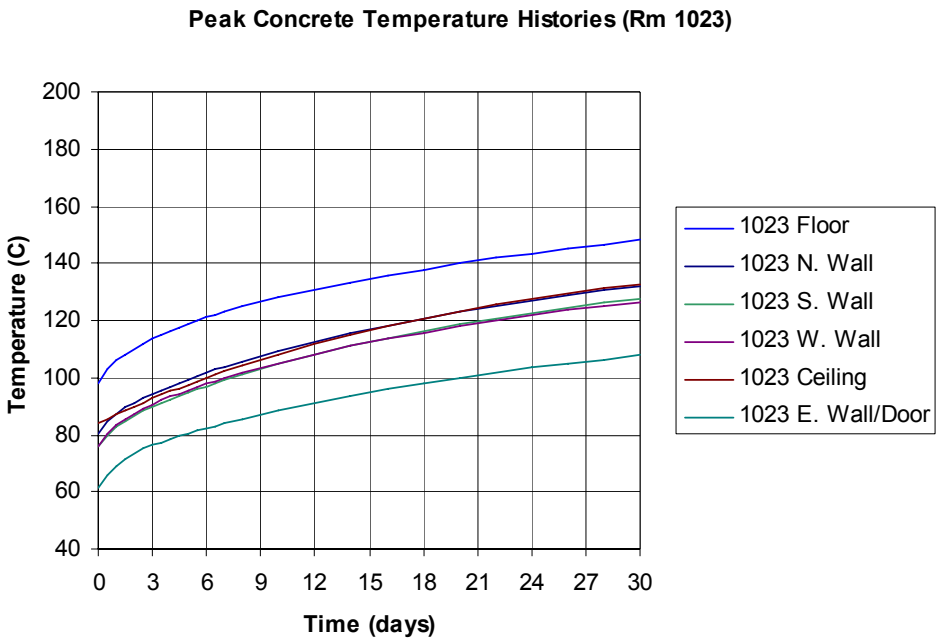

Figure 26. Peak Concrete Temperature Histories (°C) – Room 1023, Off-Normal, No Flow, 30 kW

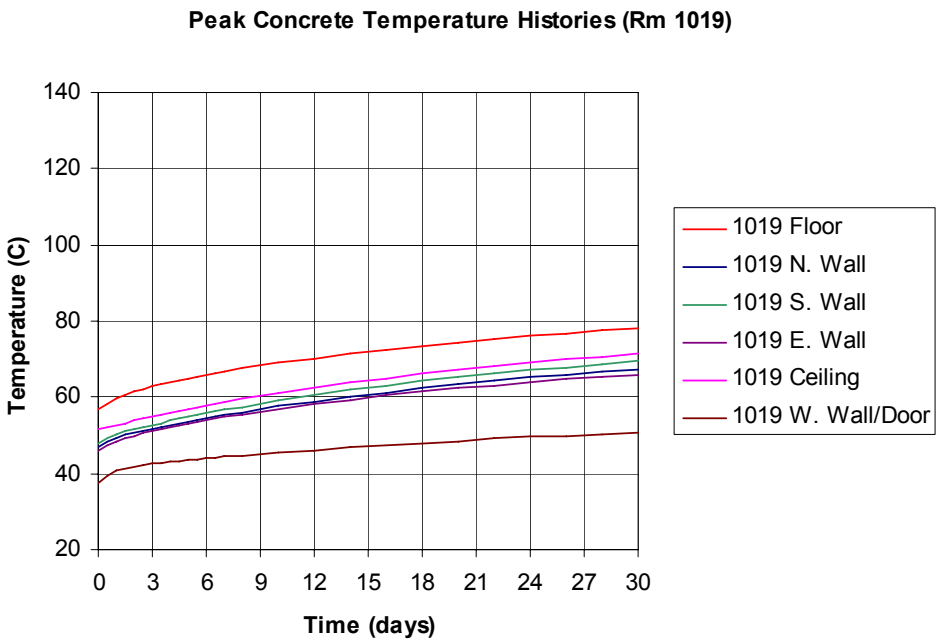

Figure 27. Peak Concrete Temperature Histories (°C) – Room 1019, Off-Normal, No Flow, 11.8 kW

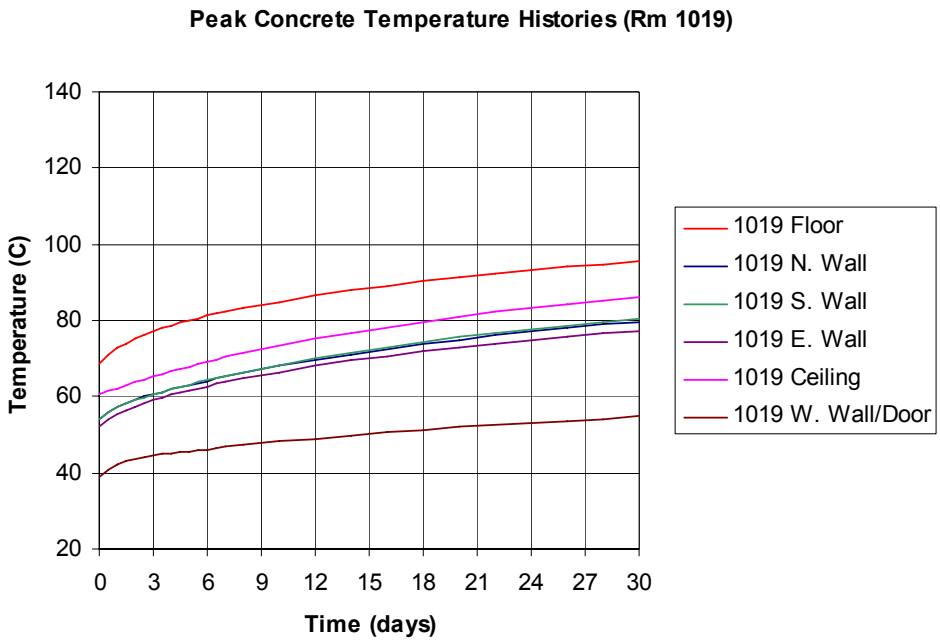

Figure 28. Peak Concrete Temperature Histories (°C) – Room 1019, Off-Normal, No Flow, 18 kW

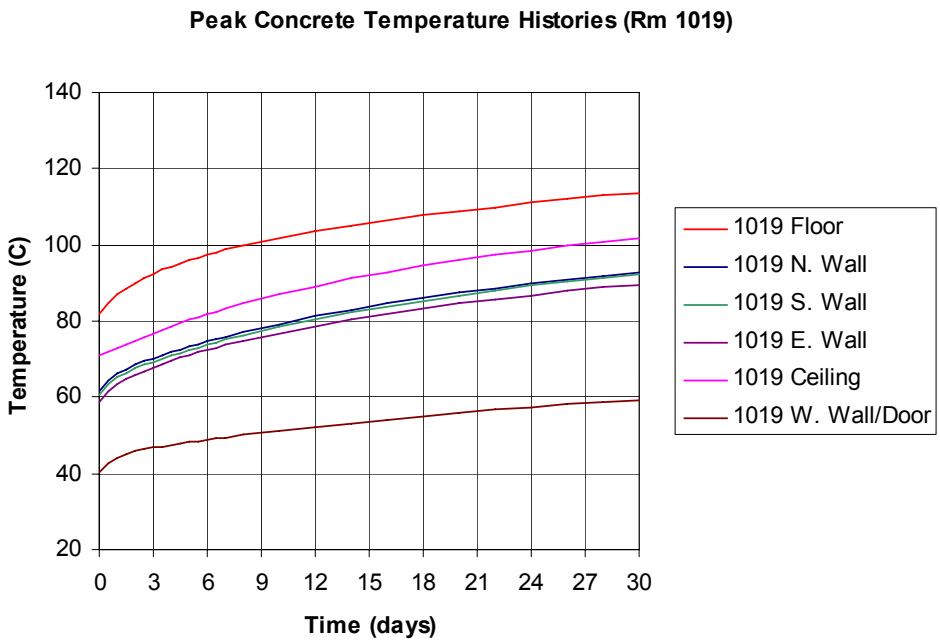

Figure 29. Peak Concrete Temperature Histories (°C) – Room 1019, Off-Normal, No Flow, 25 kW

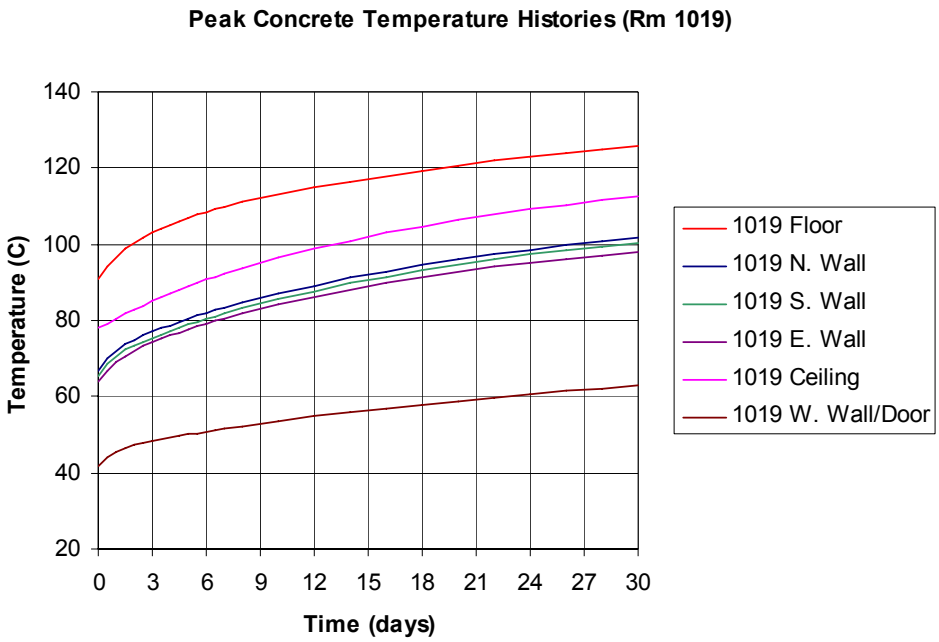

Figure 30. Peak Concrete Temperature Histories (°C) – Room 1019, Off-Normal, No Flow, 30 kW

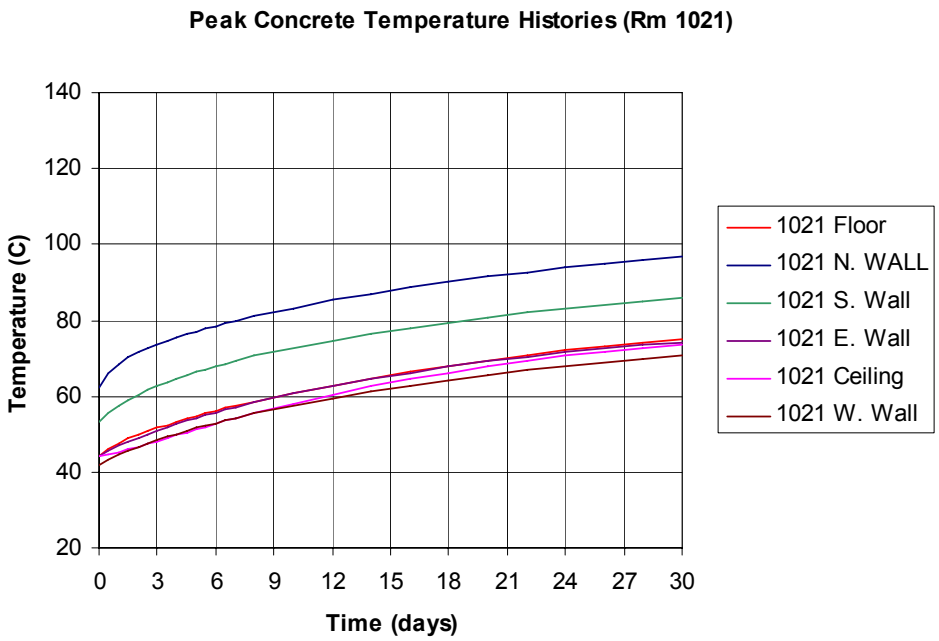

Figure 31. Peak Concrete Temperature Histories (°C) – Room 1021, Off-Normal, No Flow, 9.47 kW

BSC

Calculation/Analysis Change Notice

Complete only applicable items.

1. QA: QA
2. Page 1 of 10

3. Document Identifier:	4. Rev.:	5. CACN:
060-00C-DS00-00100-000	00A	001

6. Title:
Thermal Evaluation of the CRCF-1 Lower Transfer Room Cells

7. Reason for Change:
An informal, internal review of thermal products found that the column headings in the second columns of Tables 93-98, 101, and 102 were confusing.

8. Supersedes Change Notice: ☐ Yes If, Yes, CACN No.: _____ ☒ No

9. Change Impact:

Inputs Changed:	☐ Yes	☒ No	Results Impacted:	☐ Yes	☒ No
Assumptions Changed:	☐ Yes	☒ No	Design Impacted:	☐ Yes	☒ No

10. Description of Change:
The column headings in the second columns of Tables 93-98, 101, and 102 were replaced to read "NS-4-FR" only, eliminating the identification of thermal conductivity, since the effective thermal conductivity is correctly stated in the heading of each table.

For consistency and clarity, the column headings in the second columns of Tables 51-54, and 72-75 were replaced to read "NS-4-FR" only, and the identification of thermal conductivity was placed in the heading of each table.

This change is editorial in nature, and there is no impact on the results and conclusions.

The pages affected by this change (74, 75, 76, 83, 84, 94, 95, 98, and 99) are attached.

11. REVIEWS AND APPROVAL

Printed Name	Signature	Date
11a. Originator: Tim deBues	Tim deBues	2/26/08
11b. Checker: Daniel Wang	[illegible]	2/26/08
11c. EGS: Del Mecham	Del Mecham	2/26/08
11d. DEM: Michael J. Anderson	[illegible]	2/26/08
11e. Design Authority: Barbara Rusinko / Jack Cloud	[illegible] FOR B. RUSINKO	2/26/08

In order to confirm this result, a 2-D steady-state analysis was performed in ANSYS for the TAD Waste Package with a heat load of 23 kW inside the trolley tube, with an effective thermal conductivity of NS-4-FR of 6.5 W/m-K. In order to get a peak trolley tube surface temperature to apply as a boundary condition, without running a new 3-D ANSYS case, linear regression was performed on the peak trolley tube surface temperature results listed in Table 44, yielding a peak trolley tube surface temperature of 87.2 °C (see Attachment V, DVD 1 of 2, file: *CRCF_results_summary.xls*, Tab: *NORMAL FLOW, SS* for calculation). The results for the 23 kW TAD Waste Package in the trolley tube are shown in Table 51 and Table 52.

Table 51. TAD Waste Package in Trolley Tube Peak Temperatures (°C), Normal Condition ($k_{NS\text{-}4\text{-}FR}$ = 6.5 W/m-K)

WP Heat Load (kW)	NS-4-FR	Tube Inside Surface	WP OCB	WP IV	TAD Canister Surface	TAD Canister Cladding
11.8	70.8	73.2	134.4	168.8	195.6	255.4
18	91.1	94.7	169.8	213.5	247.9	339.1
25	112.7	117.8	203.3	254.6	295.8	422.4
30	127.5	133.6	224.3	280.1	325.2	477.2
23	106.0	110.7	193.9	243.3	282.7	399.3

Table 52. TAD Waste Package in Trolley Tube Peak Temperatures (°F), Normal Condition ($k_{NS\text{-}4\text{-}FR}$ = 6.5 W/m-K)

WP Heat Load (kW)	NS-4-FR	Tube Inside Surface	WP OCB	WP IV	TAD Canister Surface	TAD Canister Cladding
11.8	159.5	163.8	273.9	335.9	384.0	491.7
18	196.0	202.5	337.7	416.2	478.3	642.5
25	234.9	244.0	397.9	490.3	564.4	792.4
30	261.5	272.5	435.8	536.2	617.3	891.0
23	222.8	231.2	381.0	469.9	540.9	750.7

7.2.3.2 5-DHLW/DOE SNF Short Waste Package in Trolley Tube, Normal Condition

A steady-state 2-D ANSYS analysis was performed with the maximum trolley tube surface temperature obtained with a 9.47 kW heat load (see Table 44). Results are presented in Table 53 through Table 56.

For the case of a fully loaded 5-DHLW/DOE SNF Short Waste Package (1 DOE SNF canister @ 1.97 kW + 5 DOE HLW canisters @ 1.5 kW each = 9.47 kW), both the DOE SNF and the DOE SNF canister exceed thermal limits. In order to examine at what heat loads the DOE SNF and the DOE SNF canister temperature limits are not exceeded, additional 2-D steady-state analyses were performed in ANSYS for the 5-DHLW/DOE SNF Short Waste Package inside the trolley tube (with an effective thermal conductivity of NS-4-FR of 6.5 W/m-K) with lower total waste package heat loads.

In order to get a peak trolley tube surface temperature to apply as a boundary condition, without running a new 3-D ANSYS cases, linear regression was performed on the peak trolley tube surface temperature results listed in Table 44. For total waste package heat loads of 6.97 kW, 1.97 kW, and 1.5 kW, peak trolley tube surface temperatures of 49.8 °C, 38.1 °C, and 37.0 °C, respectively (see Attachment V, DVD 1 of 2, file: *CRCF_results_summary.xls*, Tab: *NORMAL FLOW, SS* for calculation). The results are also presented in Table 53 through Table 56.

For the case of a 5-DHLW/DOE SNF Short Waste Package at 6.97 kW (1 DOE SNF canister @ 1.97 kW + 5 DOE HLW canisters @ 1.0 kW each = 6.97 kW), the DOE SNF is below the limit of 350 °C. The DOE SNF canister is below the limit of 315.5 °C for enclosed environments, but exceeds the 148.9 °C limit for open (air) environments. The same is true for the case of a 5-DHLW/DOE SNF Short Waste Package at 1.97 kW (1 DOE SNF canister @ 1.97 kW + 5 DOE HLW canisters @ 0 kW each = 1.97 kW). For the case of a 5-DHLW/DOE SNF Short Waste Package at 1.5 kW (1 DOE SNF canister @ 1.5 kW + 5 DOE HLW canisters @ 0 kW each = 1.5 kW), the DOE SNF is below the limit of 350 °C, and the DOE SNF canister is below the 148.9 °C limit for open (air) environments.

Table 53. 5-DHLW/DOE SNF Short WP in Trolley Tube Peak Temperatures (°C), Normal Condition ($k_{NS\text{-}4\text{-}FR}$ = 6.5 W/m-K)

WP Heat Load (kW)	NS-4-FR	Tube Inside Surface	WP OCB	WP IV
9.47	67.3	70.3	142.1	181.4
6.97	58.9	61.1	120.6	153.2
1.97	40.6	41.3	64.6	77.3
1.5	38.9	39.4	57.9	68.0

Table 54. 5-DHLW/DOE SNF Short WP in Trolley Tube Peak Temperatures (°F), Normal Condition ($k_{NS-4-FR}$ = 6.5 W/m-K)

WP Heat Load (kW)	NS-4-FR	Tube Inside Surface	WP OCB	WP IV
9.47	153.1	158.6	287.8	358.5
6.97	138.0	142.0	249.1	307.8
1.97	105.2	106.3	148.3	171.1
1.5	102.1	103.0	136.2	154.4

Table 55. 5-DHLW/DOE SNF Short WP in Trolley Tube Peak Canister Temperatures (°C), Normal Condition

WP Heat Load (kW)	DOE SNF Canister Surface	DOE SNF	DOE HLW Canister Surface	DOE HLW
9.47	326.3	388.0	310.9	320.1
6.97	284.3	345.9	263.5	265.8
1.97	175.3	236.9	N/A	N/A
1.5	147.2	194.1	N/A	N/A

Table 56. 5-DHLW/DOE SNF Short WP in Trolley Tube Peak Canister Temperatures (°F), Normal Condition

WP Heat Load (kW)	DOE SNF Canister Surface	DOE SNF	DOE HLW Canister Surface	DOE HLW
9.47	619.4	730.4	591.6	608.2
6.97	543.7	654.7	506.2	510.4
1.97	347.5	458.5	N/A	N/A
1.5	296.9	381.4	N/A	N/A

Table 71. Peak Concrete Temperatures (°F) in Room 1021, Off-Normal, Reduced Flow

Heat Load In 1019 (kW)	Floor	Ceiling	North Wall	East Wall	South Wall	West Wall
9.47	170.3	168.6	205.1	163.9	185.1	159.6
11.8	171.7	169.9	206.8	165.2	186.3	160.8
18	175.7	173.3	211.2	168.6	189.4	164.1
25	180.6	177.2	216.1	172.6	193.0	168.4
30	184.2	179.9	219.5	175.4	195.6	171.6

7.3.3 2-D ANSYS Results for WP in Trolley Tube in Room 1019, Off-Normal, Reduced Flow

Comparing Table 59 and Table 65, the peak trolley tube surface temperatures for the off-normal condition with reduced air flow occur in Room 1023.

7.3.3.1 TAD Waste Package in Trolley Tube, Off-Normal, Reduced Flow

Steady-state 2-D ANSYS analyses were performed for each heat load with the maximum trolley tube surface temperatures listed in Table 59. Results are presented in Table 72 and Table 73.

As shown in Table 72, the NS-4-FR neutron shield in the trolley tube exceeds the 148.9 °C limit for the 25 kW and 30 kW cases. Based on linear regression, the maximum heat load the TAD Waste Package can have inside the trolley tube (with an effective thermal conductivity of NS-4-FR of 6.5 W/m-K) without exceeding the NS-4-FR temperature limits is 24.9 kW (see Attachment V, DVD 1 of 2, file: *CRCF_results_summary.xls*, Tab: *OFF-NORMAL, ITS EXHAUST, SS* for calculation).

Table 72. TAD Waste Package in Trolley Tube Peak Temperatures (°C), Off-Normal, Reduced Flow ($k_{NS\text{-}4\text{-}FR}$ = 6.5 W/m-K)

WP Heat Load (kW)	NS-4-FR	Tube Inside Surface	WP OCB	WP IV	TAD Canister Surface	TAD Canister Cladding
11.8	99.4	101.8	153.0	184.7	210.1	269.9
18	123.8	127.5	189.9	230.1	262.8	354.0
25	149.6	154.8	225.3	272.5	311.4	438.1
30	167.1	173.3	247.9	298.9	341.5	493.5

Table 73. TAD Waste Package in Trolley Tube Peak Temperatures (°F), Off-Normal, Reduced Flow ($k_{NS-4-FR}$ = 6.5 W/m-K)

WP Heat Load (kW)	NS-4-FR	Tube Inside Surface	WP OCB	WP IV	TAD Canister Surface	TAD Canister Cladding
11.8	211.0	215.3	307.4	364.5	410.2	517.8
18	254.8	261.4	373.9	446.2	505.0	669.2
25	301.3	310.6	437.6	522.4	592.5	820.5
30	332.8	343.9	478.1	570.1	646.7	920.4

7.3.3.2 5-DHLW/DOE SNF Short WP in Trolley Tube, Off-Normal, Reduced Flow

A steady-state 2-D ANSYS analysis was performed with the maximum trolley tube surface temperature obtained with a 9.47 kW heat load (see Table 59). Results are presented in Table 74 through Table 77. The DOE SNF canister exceeds the limit of 315.5 °C for enclosed environments, and thus also exceeds the 148.9 °C limit for open (air) environments.

Table 74. 5-DHLW/DOE SNF Short WP in Trolley Tube Peak Temperatures (°C), Off-Normal, Reduced Flow ($k_{NS-4-FR}$ = 6.5 W/m-K)

WP Heat Load (kW)	NS-4-FR	Tube Inside Surface	WP OCB	WP IV
9.47	104.9	108.0	165.4	201.2

Table 75. 5-DHLW/DOE SNF Short WP in Trolley Tube Peak Temperatures (°F), Off-Normal, Reduced Flow ($k_{NS-4-FR}$ = 6.5 W/m-K)

WP Heat Load (kW)	NS-4-FR	Tube Inside Surface	WP OCB	WP IV
9.47	220.8	226.3	329.7	394.2

Waste Packages above 11.8 kW exceed the 300 °C limit. For the TAD Waste Packages at 25 kW and 30 kW, the peak cladding temperature exceeds the off-normal limit of 570 °C.

Since the NS-4-FR is essentially a thermally insulating material, heat flow from the waste package to the environment, through the trolley tube shielding, is limited. If thermal shunts in the form of a honeycomb of some conductive material (such as aluminum) permeated the NS-4-FR, the effective thermal conductivity of the neutron shielding layer of the trolley tube could be increased, thus allowing greater heat rejection to the environment.

To confirm this, the above cases were rerun using a higher effective thermal conductivity for the NS-4-FR equal to 6.5 W/m-K, which is approximately 10 times the value of pure NS-4-FR. Results for these cases at 30 days are presented in Table 95 and Table 96. At 30 days, with the higher value of $k_{NS\text{-}4\text{-}FR}$, outer corrosion barrier temperatures stay below the 300 °C limit for all cases, and peak cladding temperature stay below the off-normal limit of 570 °C for all cases.

Temperature history plots of the 30-day transient solutions for the TAD Waste Package in the trolley tube are shown in Figure 15 through Figure 18. The plots indicate that, for a TAD Waste Package inside the trolley tube, no thermal limits are exceeded at 11.8 kW. At 18 kW, only the thermal limit of NS-4-FR (148.9 °C) is exceeded, and this occurs after 14 days. At 25 kW and 30 kW, only the thermal limit of NS-4-FR (148.9 °C) is exceeded, occurring immediately.

Table 93. TAD Waste Package in Trolley Tube Peak Temperatures (°C), Off-Normal, No Flow, at 30 Days ($k_{NS\text{-}4\text{-}FR}$ = 0.646 W/m-K)

WP Heat Load (kW)	NS-4-FR	Tube Inside Surface	WP OCB	WP IV	TAD Canister Surface	TAD Canister Cladding
11.8	207.5	209.9	236.9	259.1	278.9	338.4
18	287.5	291.4	317.9	342.2	365.1	456.0
25	373.6	379.3	403.8	428.5	453.0	579.2
30	433.0	440.2	463.1	487.6	512.7	664.2

Table 94. TAD Waste Package in Trolley Tube Peak Temperatures (°F), Off-Normal, No Flow, at 30 Days ($k_{NS-4-FR}$ = 0.646 W/m-K)

WP Heat Load (kW)	NS-4-FR	Tube Inside Surface	WP OCB	WP IV	TAD Canister Surface	TAD Canister Cladding
11.8	405.4	409.8	458.4	498.4	533.9	641.0
18	549.5	556.6	604.2	648.0	689.2	852.7
25	704.4	714.8	758.9	803.3	847.3	1074.6
30	811.3	824.4	865.5	909.6	954.8	1227.5

Table 95. TAD Waste Package in Trolley Tube Peak Temperatures (°C), Off-Normal, No Flow, at 30 Days ($k_{NS-4-FR}$ = 6.5 W/m-K)

WP Heat Load (kW)	NS-4-FR	Tube Inside Surface	WP OCB	WP IV	TAD Canister Surface	TAD Canister Cladding
11.8	122.8	125.2	169.4	198.8	223.0	282.6
18	157.6	161.3	213.0	249.5	280.1	371.1
25	192.6	197.8	254.3	296.4	332.5	459.0
30	215.6	221.8	280.6	325.7	365.0	516.7

Table 96. TAD Waste Package in Trolley Tube Peak Temperatures (°F), Off-Normal, No Flow, at 30 Days ($k_{NS-4-FR}$ = 6.5 W/m-K)

WP Heat Load (kW)	NS-4-FR	Tube Inside Surface	WP OCB	WP IV	TAD Canister Surface	TAD Canister Cladding
11.8	253.1	257.4	336.9	389.9	433.4	540.6
18	315.8	322.4	415.3	481.0	536.2	700.0
25	378.7	388.0	489.8	565.6	630.6	858.2
30	420.0	431.3	537.0	618.3	689.0	962.1

7.4.3.2 5-DHLW/DOE SNF Short WP in Trolley Tube, Off-Normal, No Flow

A steady-state 2-D ANSYS analysis was performed with the maximum trolley tube surface temperature obtained with a 9.47 kW heat load (see Table 80).

Initially, the thermal conductivity of NS-4-FR ($k_{NS\text{-}4\text{-}FR}$) used was 0.646 W/m-K. Results for these cases at 30 days are presented in Table 97 through Table 100. At 30 days, the thermal limit of NS-4-FR (148.9 °C) is exceeded.

This case was also rerun using a higher effective thermal conductivity for the NS-4-FR equal to 6.5 W/m-K, which is approximately 10 times the value of pure NS-4-FR. Results for these cases at 30 days are presented in Table 101 through Table 104. At 30 days, the DOE SNF canister exceeds the limit of 315.5 °C for enclosed environments, and thus also exceeds the 148.9 °C limit for open (air) environments.

Table 97. 5-DHLW/DOE SNF Short WP in Trolley Tube Peak Temperatures (°C), Off-Normal, No Flow, at 30 Days ($k_{NS\text{-}4\text{-}FR}$ = 0.646 W/m-K)

WP Heat Load (kW)	NS-4-FR	Tube Inside Surface	WP OCB	WP IV
9.47	227.7	230.9	259.9	284.9

Table 98. 5-DHLW/DOE SNF Short WP in Trolley Tube Peak Temperatures (°F), Off-Normal, No Flow, at 30 Days ($k_{NS\text{-}4\text{-}FR}$ = 0.646 W/m-K)

WP Heat Load (kW)	NS-4-FR	Tube Inside Surface	WP OCB	WP IV
9.47	441.8	447.6	499.8	544.9

Table 99. 5-DHLW/DOE SNF Short WP in Trolley Tube Peak Canister Temperatures (°C), Off-Normal, No Flow, at 30 Days ($k_{NS\text{-}4\text{-}FR}$ = 0.646 W/m-K)

WP Heat Load (kW)	DOE SNF Canister Surface	DOE SNF	DOE HLW Canister Surface	DOE HLW
9.47	398.8	460.3	387.2	398.6

Table 100. 5-DHLW/DOE SNF Short WP in Trolley Tube Peak Canister Temperatures (°F), Off-Normal, No Flow, at 30 Days ($k_{NS-4-FR}$ = 0.646 W/m-K)

WP Heat Load (kW)	DOE SNF Canister Surface	DOE SNF	DOE HLW Canister Surface	DOE HLW
9.47	749.8	860.6	729.0	749.4

Table 101. 5-DHLW/DOE SNF Short WP in Trolley Tube Peak Temperatures (°C), Off-Normal, No Flow, at 30 Days ($k_{NS-4-FR}$ = 6.5 W/m-K)

WP Heat Load (kW)	NS-4-FR	Tube Inside Surface	WP OCB	WP IV
9.47	118.9	122.0	174.7	209.1

Table 102. 5-DHLW/DOE SNF Short WP in Trolley Tube Peak Temperatures (°F), Off-Normal, No Flow, at 30 Days ($k_{NS-4-FR}$ = 6.5 W/m-K)

WP Heat Load (kW)	NS-4-FR	Tube Inside Surface	WP OCB	WP IV
9.47	246.0	251.6	346.5	408.4

Table 103. 5-DHLW/DOE SNF Short WP in Trolley Tube Peak Canister Temperatures (°C), Off-Normal, No Flow, at 30 Days ($k_{NS-4-FR}$ = 6.5 W/m-K)

WP Heat Load (kW)	DOE SNF Canister Surface	DOE SNF	DOE HLW Canister Surface	DOE HLW
9.47	344.7	406.3	330.4	340.1