LOGIC SYMBOLS

SYMBOL	LOGIC FUNCTION	DESCRIPTION
	OR	A DEVICE WHICH PRODUCES AN OUTPUT ONLY WHEN ONE INPUT (OR MORE) EXISTS.
	NOT	A DEVICE WHICH PRODUCES AN OUTPUT ONLY WHEN THE INPUT DOES NOT EXIST.
	AND	A DEVICE WHICH PRODUCES AN OUTPUT ONLY WHEN EVERY INPUT EXISTS
2/3	COINCIDENCE (2 OUT OF 3 SHOWN)	A DEVICE WHICH PRODUCES AN OUTPUT WHEN THE PRESCRIBED NUMBER OF INPUTS EXIST (EXAMPLE 2 INPUTS MUST EXIST FOR AN OUTPUT).
	ADJUSTABLE TIME DELAY	A DEVICE WHICH PRODUCES AN OUTPUT FOLLOWING DEFINITE INTENTIONAL TIME DELAY AFTER RECEIVING AN INPUT.
	OFF RETURN MEMORY	A DEVICE WHICH RETAINS THE CONDITION OF OUTPUT CORRESPONDING TO THE LAST ENERGIZED INPUT, EXCEPT UPON INTERRUPTION OF POWER IT RETURNS TO THE OFF CONDITION.
	RETENTIVE MEMORY	A DEVICE WHICH RETAINS THE CONDITION OF OUTPUT CORRESPONDING TO THE LAST ENERGIZED INPUT (ALSO UPON INTERRUPTION OF POWER).
L R	RETENTIVE MEMORY WITH ACTUATION BLOCK	A DEVICE HAVING RETENTIVE MEMORY AND ACTUATION SIGNAL BLOCK LOGIC FUNCTIONS AS INDICATED BY THE DIAGRAM BELOW.

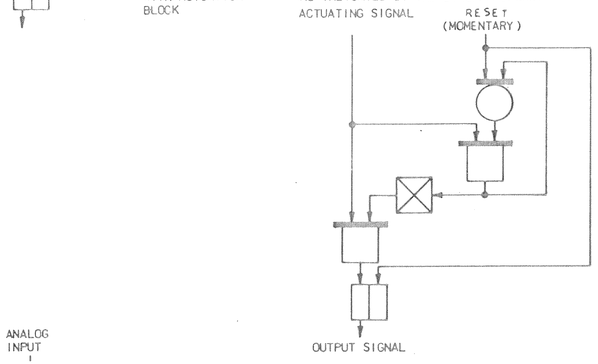

ANALOG INPUT / CONTROL LOGIC INPUT / ANALOG OUTPUT	ANALOG GATE	A DEVICE WHICH PERMITS AN ANALOG SIGNAL TO PASS IN AN ISOLATED CIRCUIT IF THE CONTROL LOGIC INPUT EXISTS.
	ADJUSTABLE TIME DELAY	A DEVICE WHICH REMOVES AN OUTPUT FOLLOWING A DEFINITE INTENTIONAL TIME DELAY AFTER REMOVAL OF THE INPUT

ADDITIONAL SYMBOLS

PB 143A — INSTRUMENT CHANNEL BISTABLE

OUTPUT INDICATOR

- BISTABLE OUTPUT IS A LOGIC "1" WHEN THE MEASURED PARAMETER IS GREATER THAN THE SETPOINT VALUE.
- BISTABLE OUTPUT IS A LOGIC "1" WHEN THE MEASURED PARAMETER IS LESS THAN THE SETPOINT VALUE.
- BISTABLE OUTPUT IS A LOGIC "1" WHEN THE MEASURED PARAMETER DEVIATES FROM THE NORMAL VALUE BY MORE THAN THE SETPOINT AMOUNTS.
- OR OR — SAME AS ABOVE EXCEPT WITH AN AUTOMATICALLY ADJUSTED SETPOINT
- OR OR — SAME AS ABOVE EXCEPT WITH REQUIRED HYSTERESIS

27 — NON-INSTRUMENT BISTABLE

OUTPUT INDICATOR (SAME AS EXPLAINED ABOVE)

ZL OR UL — INDICATOR LAMP (SUPPLIED BY UE&C) (FP.5-70073, 30001, 51029)

COMPUTER INPUT (SUPPLIED BY UE&C) (FP.5-70073, 30001, 51029)

LOGIC INFORMATION TRANSMISSION

ANALOG INFORMATION TRANSMISSION

R OR I — ANALOG DISPLAY (SUPPLIED BY UE&C)

Σ — ANALOG SUMMER

GENERAL NOTES: (FOR ALL SHEETS)

1. IN ALL LOGIC CIRCUITS, THE INDICATED ACTUATION OF A SYSTEM OR DEVICE OCCURS WHEN A LOGIC "1" SIGNAL IS PRESENT. EXCEPT WHERE INDICATED OTHERWISE, ALL BISTABLES ARE "DE-ENERGIZE TO ACTUATE" SUCH THAT A LOGIC 1 SIGNAL IS DEFINED TO BE PRESENT WHEN THE BISTABLE OUTPUT VOLTAGE IS OFF.
2. EXCEPT WHERE INDICATED OTHERWISE, THE FOLLOWING IS TRUE: ALL LOGIC CIRCUITS ARE REDUNDANT THAT IS EVERY LOGIC CIRCUIT SHOWN HAS A DUPLICATE LOCATED IN A SEPARATE CABINET. ALL INSTRUMENT CHANNELS, BISTABLES, COMPUTER INPUTS AND INDICATOR LAMPS ARE NOT REDUNDANT. MANUAL CONTROLS DO NOT HAVE REDUNDANT ACTUATORS, BUT DO HAVE REDUNDANT CONTACTS WHERE LOGIC IS REDUNDANT. ALL INDICATOR LAMPS, AND COMPUTOR INPUTS ARE CONNECTED TO BOTH TRAINS (WHERE LOGIC IS REDUNDANT) SO THAT A SIGNAL IN EITHER TRAIN WILL ACTUATE.
3. WHENEVER A PROCESS SIGNAL IS USED FOR CONTROL AND IS DERIVED FROM A PROTECTION CHANNEL, ISOLATION MUST BE PROVIDED. COMPUTER INPUTS ARE NOT A REQUIREMENT OF THE REACTOR CONTROL AND PROTECTION OR ENGINEERED SAFEGUARDS SYSTEMS AND ARE SHOWN FOR INFORMATION ONLY.
4. THIS SET OF DRAWINGS AND THE ASSOCIATED REACTOR CONTROL AND PROTECTION SYSTEM FUNCTIONAL REQUIREMENTS DOCUMENTS ILLUSTRATE THE FUNCTIONAL REQUIREMENTS OF THE REACTOR CONTROL AND PROTECTION SYSTEM, INCLUDING ENGINEERED SAFEGUARDS. THESE DRAWINGS SHOULD NOT BE USED WITHOUT THE ASSOCIATED FUNCTIONAL REQUIREMENTS DOCUMENT AND THEY DO NOT REPRESENT ACTUAL HARDWARE IMPLEMENTATION. FOR HARDWARE IMPLEMENTATION, REFER TO THE FOLLOWING REFERENCE DRAWINGS:

   LATER SOLID STATE PROTECTION SYSTEM SCHEMATIC
   724709I SOLID STATE PROTECTION SYSTEM INTERCONNECTION — (FP-70073)
   5655D49 NUCLEAR INSTRUMENTATION SOURCE RANGE — (FP-70147)
   5655D50 NUCLEAR INSTRUMENTATION INTERMEDIATE RANGE — (FP-70148)
   5655D51 NUCLEAR INSTRUMENTATION POWER RANGE — (FP-70149)
   5655D52 NUCLEAR INSTRUMENTATION AUXILIARY CHANNELS — (FP-70150)
   8756D51 PROCESS CONTROL SYSTEMS BLOCK DIAGRAM — (FP-70001)
   271C339 ELEMENTARY WIRING DIAGRAM — (FP-30001)
   1189E15 REACTOR TRIP SWITCHGEAR ELEMENTARY — (FP-30591)
   OTHERS CONTROL BOARD SOLID STATE PROTECTION SYSTEM WIRING.
5. THIS SET OF DRAWINGS IS IDENTICAL FOR MULTIPLE UNITS EXCEPT FOR THE TAG NUMBERS; FOR UNIT 1 TAG NUMBERS ADD A "1" (EXAMPLE: 1RC-PB-455E) FOR UNIT 2 TAG NUMBERS ADD A "2" (EXAMPLE: 2-RC-PB-455E)
6. FOR GENERAL NOTES AND REFERENCE DWGS SEE. 9763-M-503100
7. FOR SET POINTS REFERENCE SET POINT DATA LIST 9763-M-500376.

DEVICE FUNCTION LETTERS AND NUMBERS

FB	FLOW CHANNEL
LB	LEVEL CHANNEL
NC	NUCLEAR CHANNEL
PB	PRESSURE CHANNEL
RC	RADIATION CHANNEL
SB	SPEED CHANNEL
TB	TEMPERATURE CHANNEL
ZB	POSITION CHANNEL
20	ELECTRIC OPERATED VALVE
27	UNDERVOLTAGE RELAY
33	POSITION SWITCH
52	AC CIRCUIT BREAKER
63	PRESSURE SWITCH
71	LEVEL SWITCH
80	FLOW SWITCH
81	UNDERFREQUENCY RELAY

DWG. 509041 THRU C509056 ARE UE&C REDRAWS OF THE WESTINGHOUSE FUNCTIONAL DIAGRAMS.-AS REFERENCED BELOW, UE&C HAS ADDED MAIN CONTROL BOARD(MCB) LOCATIONS, COMPUTER ID NUMBERS, MONITORINGS LIGHT NUMBERS, RECORDER NUMBERS, CONTROL SWITCH NUMBERS, REFERENCE DRAWINGS AND APPLICABLE UE&C INTERFERACE.

INDEX

TITLE	SH. NO.	WESTINGHOUSE DWG NO.	SHEET	UE&C FP.	REV
INDEX AND SYMBOLS	C509041	7245002	1	703.13	9
REACTOR TRIP SIGNALS	42		2	14	7
NUCLEAR INSTR. AND MANUAL TRIP SIGNALS	43		3	15	4
NUCLEAR INSTR. PERMISSIVES AND BLOCKS	44		4	16	4
PRIMARY COOLANT SYSTEM TRIP SIGNALS	45		5	17	6
PRESSURIZER TRIP SIGNALS	46		6	18	3
STEAM GENERATOR TRIP SIGNALS	47		7	19	6
SAFEGUARDS ACTUATION SIGNALS	48		8	20	9
ROD CONTROLS & ROD BLOCKS	49		9	21	4
STEAM DUMP CONTROL	50		10	22	3
PRESSURIZER PRESSURE & LEVEL CONTROL	51		11	23	3
PRESSURIZER HEATER CONTROL	52		12	24	4
FEEDWATER CONTROL & ISOLATION	53		13	25	3
FEEDWATER CONTROL & ISOLATION	54		14	26	2
EMERGENCY FEEDWATER PUMPS STARTUP	55		15	27	6
TURBINE TRIPS, RUNBACKS & OTHER SIGNALS	56		16	28	4

REV	DATE	DESCRIPTION	PE	DWN BY	CHKD BY	RE	SDE	QAE	PEM
13	12/6/95	MRB	JWB						
12	10/30/86	CCM		RPL	NA				
11	8/12/86	ECA 99/113274C ECA 05/117361C ECA 99/117438A ECA 05/116931A ECA05/113093G							
10	5/21/86	ECA 99/115386A		LGI					
9	1/28/86	ECA05/114449A ECA05/111763A ECA99/109679D ECA99/111518B ECA99/109947A SB-17809							
8	5-22-85	REV'D C509042,43							
7	3/24/83	REV'D C-509042							
6	1-4-85	REV'D C-509048							
5	12-6-84	REV'D C-509042,44,45,46,47,50 & 55. ADDED NOTE 5 PER SB-16055							
4	6-12-84	REV'D C-509047							
3	11/13/84	REV'D C-509042							
2	8-24-81	FIRST ISSUE							

INCORP DCR 94-039, CA-3

9763-C-509041 SUPERCEDES UE&C DWG:

DWG. TRANSFERRED TO CUSTODY OF NHY AT REV. 11 LTR. S84#40722 DTD. 10/14/86

ISSUED-FOR-CONSTRUCTION

INDEX & SYMBOLS W FUNCTIONAL DIAGRAMS

New Hampshire Yankee — Seabrook Station

1-NHY-509041 REV 13

1-NHY- 509042
REV. 10

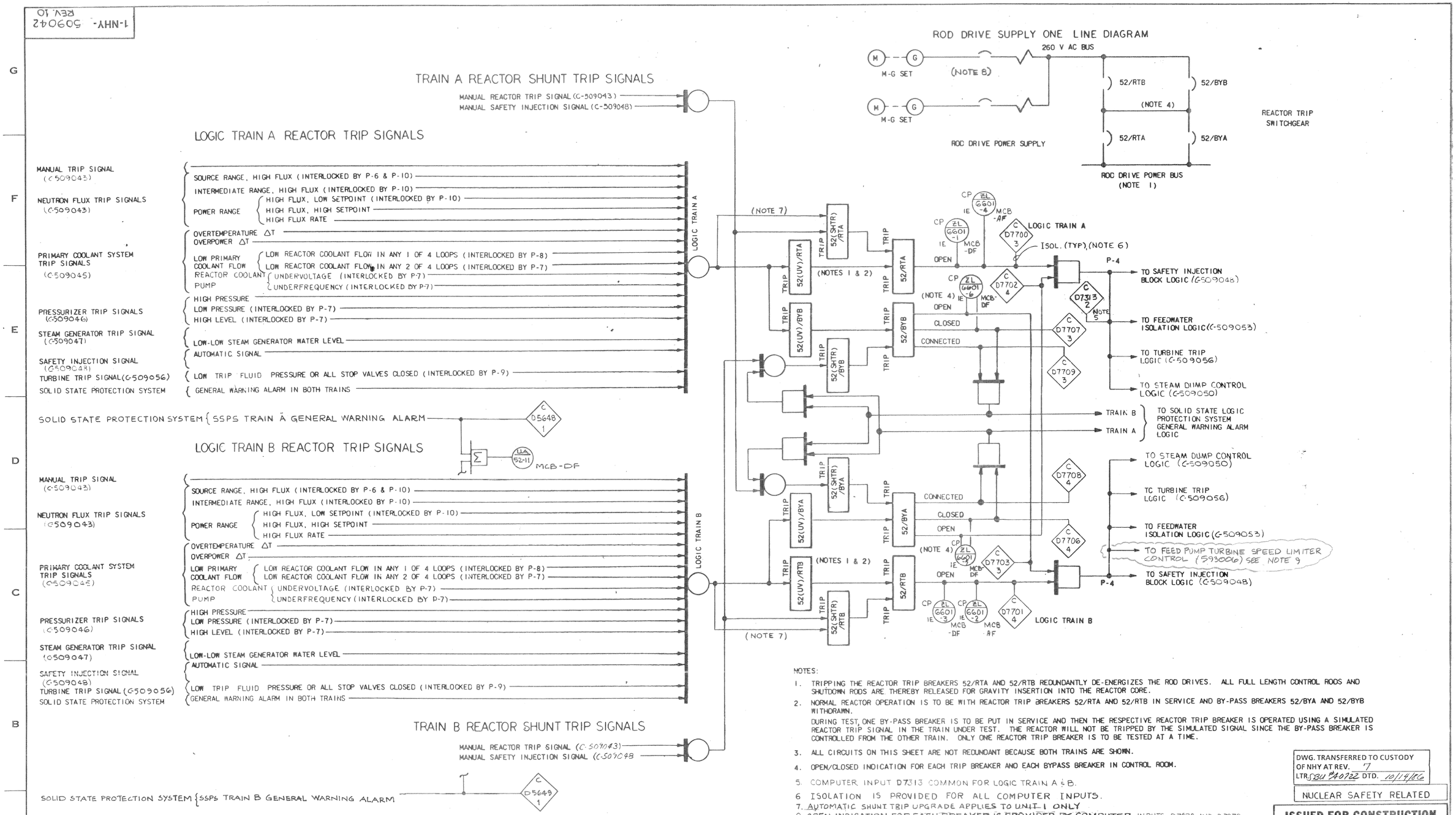

NOTES:

1. TRIPPING THE REACTOR TRIP BREAKERS 52/RTA AND 52/RTB REDUNDANTLY DE-ENERGIZES THE ROD DRIVES. ALL FULL LENGTH CONTROL RODS AND SHUTDOWN RODS ARE THEREBY RELEASED FOR GRAVITY INSERTION INTO THE REACTOR CORE.
2. NORMAL REACTOR OPERATION IS TO BE WITH REACTOR TRIP BREAKERS 52/RTA AND 52/RTB IN SERVICE AND BY-PASS BREAKERS 52/BYA AND 52/BYB WITHDRAWN.

   DURING TEST, ONE BY-PASS BREAKER IS TO BE PUT IN SERVICE AND THEN THE RESPECTIVE REACTOR TRIP BREAKER IS OPERATED USING A SIMULATED REACTOR TRIP SIGNAL IN THE TRAIN UNDER TEST. THE REACTOR WILL NOT BE TRIPPED BY THE SIMULATED SIGNAL SINCE THE BY-PASS BREAKER IS CONTROLLED FROM THE OTHER TRAIN. ONLY ONE REACTOR TRIP BREAKER IS TO BE TESTED AT A TIME.
3. ALL CIRCUITS ON THIS SHEET ARE NOT REDUNDANT BECAUSE BOTH TRAINS ARE SHOWN.
4. OPEN/CLOSED INDICATION FOR EACH TRIP BREAKER AND EACH BYPASS BREAKER IN CONTROL ROOM.
5. COMPUTER INPUT D7313 COMMON FOR LOGIC TRAIN A & B.
6. ISOLATION IS PROVIDED FOR ALL COMPUTER INPUTS.
7. AUTOMATIC SHUNT TRIP UPGRADE APPLIES TO UNIT 1 ONLY
8. OPEN INDICATION FOR EACH BREAKER IS PROVIDED BY COMPUTER INPUTS D7978 AND D7979.
9. B-TRAIN SIGNAL ONLY.

DWG. TRANSFERRED TO CUSTODY OF NHY AT REV. 7
LTR SBU #40722 DTD. 10/14/86

NUCLEAR SAFETY RELATED

ISSUED-FOR-CONSTRUCTION

REDRAW OF F.P. 70314
W 7245D02 SHT.2

REV	DATE	DRWN	CHKD	CE	LDE	DESCRIPTION
10	12/6/95	MRJ	JWB	RAW	CM	INCORP. DCR 94-039, CA-3
9	10/23/89	HP	CCM	APL	CM	INCORP. DCR 88-6, CA-1
8	1-16-87	MNA	HK	RPL	CM	INCORP. ECA 05/118192 B, 9763-C-509042 SUPERCEDES UE&C DWG.

REV. NO.	DATE	DESCRIPTION	PE	DWN. BY	CKD. BY	RES. ENG.	SDE	QAE	PEM
7	6-12-86	ECA 99/113274C ECA 05/117361C		GT				–	
6	3-7-86	ECA 99/113082A						–	
5	5/14/85	REVISED PER W F.P. 70314		HK				–	
4	7/22/85	DCN 630253A		TM				–	
3	7/27/84	REV'D INCORP. WITH M-310944 (R-3)						–	
2	5/20/83	REV. PER ENG. ASSURANCE AUDIT REPORT NHE-9		A.M.				–	
1	8-21-81	FIRST ISSUE						–	

REACTOR TRIP SIGNALS
W FUNCTIONAL DIAGRAMS

New Hampshire Yankee — Seabrook Station

1-NHY-509042 — REV. 10

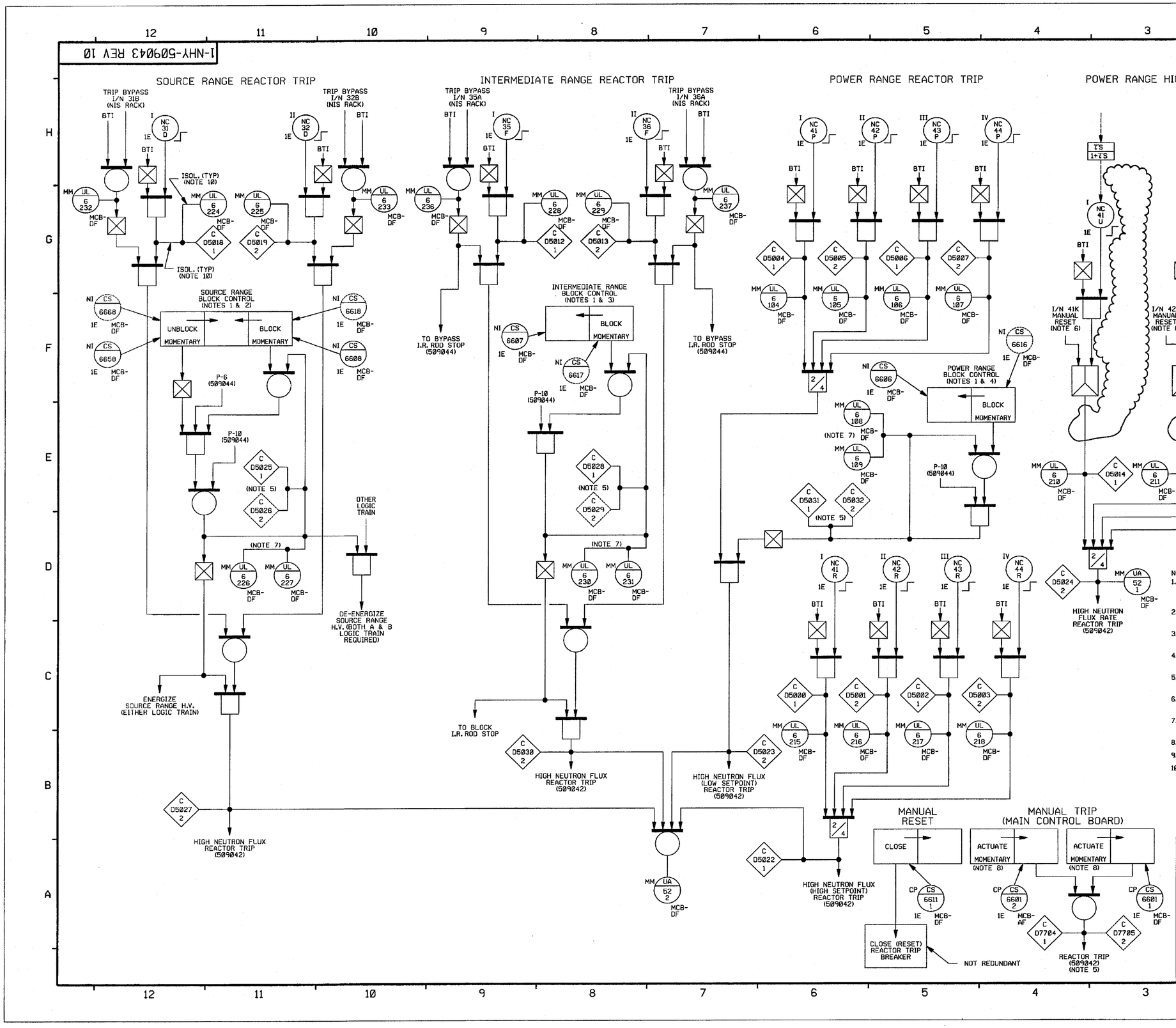

NOTES:

1. THE REDUNDANT MANUAL BLOCK CONTROLS CONSIST OF TWO CONTROLS ON THE CONTROL BOARD FOR EACH RANGE, ONE FOR EACH TRAIN. TRAIN 'B' SWITCH SHOWN THUS.
2. I/N 33A IS IN LOGIC TRAIN A. I/N 33B IS IN LOGIC TRAIN B.
3. I/N 38A IS IN LOGIC TRAIN A. I/N 38B IS IN LOGIC TRAIN B.
4. I/N 47A IS IN LOGIC TRAIN A. I/N 47B IS IN LOGIC TRAIN B.
5. TWO COMPUTER INPUTS ARE CONNECTED TO THIS CIRCUIT, INDIVIDUAL FOR EACH TRAIN. TRAIN 'B' COMPUTER INPUT IS SHOWN AS.
6. MANUAL RESET CONTROLS CONSIST OF FOUR MOMENTARY CONTROLS IN THE CONTROL ROOM, ONE CONTROL FOR EACH INSTRUMENT CHANNEL.
7. TWO PERMISSIVE STATUS LIGHTS ARE CONNECTED TO THIS CIRCUIT, INDIVIDUAL FOR EACH TRAIN.
8. REDUNDANT CONTROL SWITCHES ON SEPARATE MCB SECTIONS.
9. SYSTEM PREFIX IS 'NI' UNLESS OTHERWISE SPECIFIED.
10. ISOLATION IS PROVIDED FOR ALL COMPUTER INPUTS AND MONITORING LIGHTS.

REDRAW OF F.P. 70315
W 7245D02 SHT. 3

NUCLEAR-SAFETY-RELATED

REV	DATE	DSGN	DRWN	CHKD	CE	LDE	DESCRIPTION
10	10/14/03	TLM	TLM	[illegible]	[illegible]	RoD	INCORP. DCR 02-003, DCN-01
9	4/1/03	JWB	JWB	RB	RCD	CM	CORRECTIVE UPDATE, REF CR 03-02830
8	12/1/95	RJS	RJS	MRJ/JWB	WNF	CM	REDRAWN: INCORP. DCR 94-0002, CA-8

FPL Energy

Seabrook Station

NI & MANUAL TRIP SIGNALS
W FUNCTIONAL DIAGRAMS

1-NHY-509043 REV 10

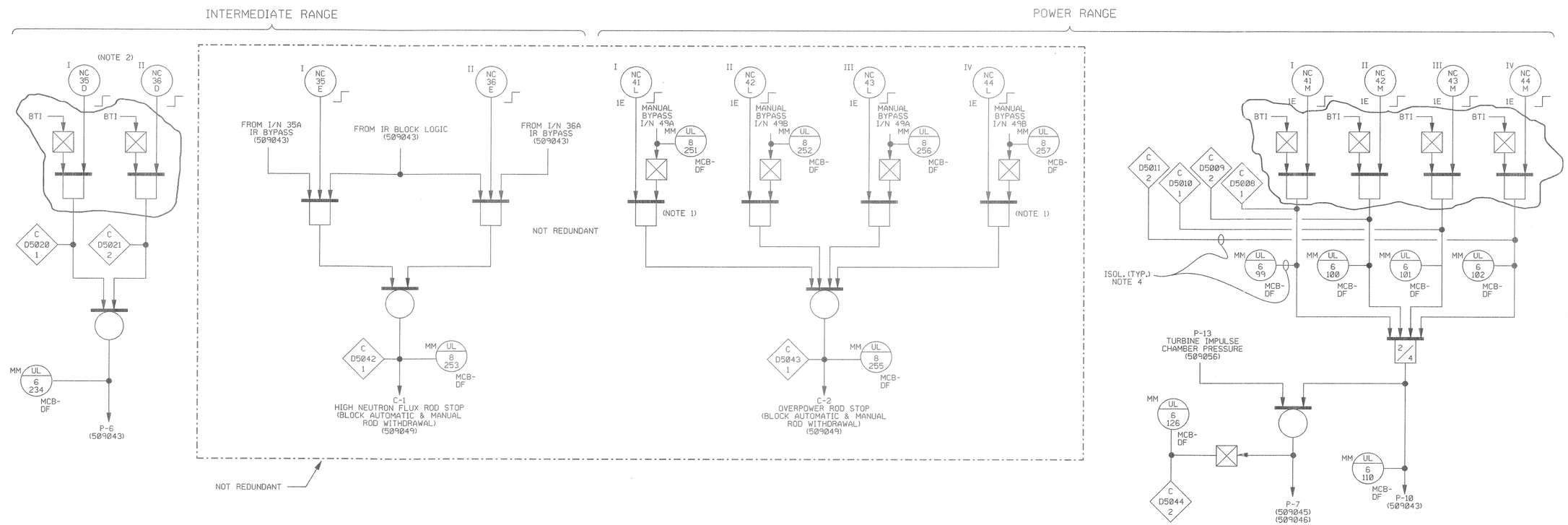

NOTES:

1. THE BYPASS SIGNALS ARE MADE UP BY MEANS OF TWO THREE-POSITION SWITCHES ON A NIS RACK. SWITCH I/N 49A BYPASSES EITHER NC-41-L OR NC-43-L. SWITCH I/N 49B BYPASSES EITHER NC-42-L OR NC-44-L. (REF. RACK CP-16)
2. THE TWO P-6 BISTABLES NO. NC-35D AND NC-36D ARE "ENERGIZED TO ACTUATE" SUCH THAT A LOGIC 1 SIGNAL IS DEFINED TO BE PRESENT WHEN THE BISTABLE OUTPUT VOLTAGE IS ON.
3. SYSTEM PREFIX IS 'NI' UNLESS OTHERWISE NOTED.
4. ISOLATION IS PROVIDED FOR COMPUTER INPUT AND MONITORING LIGHTS.

REDRAW OF F.P. 70316
W 7245D02 SHT. 4

NUCLEAR-SAFETY-RELATED

REV	DATE	DSGN	DRWN	CHKD	CE	LDE	DESCRIPTION
6	12/3/95	MRB	MRB				REDRAWN: INCORP. DCR 94-0002, CA-8

North Atlantic Energy Service Corporation

SEABROOK STATION

NI PERM & BLOCKS
W FUNCTIONAL DIAGRAMS

1-NHY-509044 REV 6

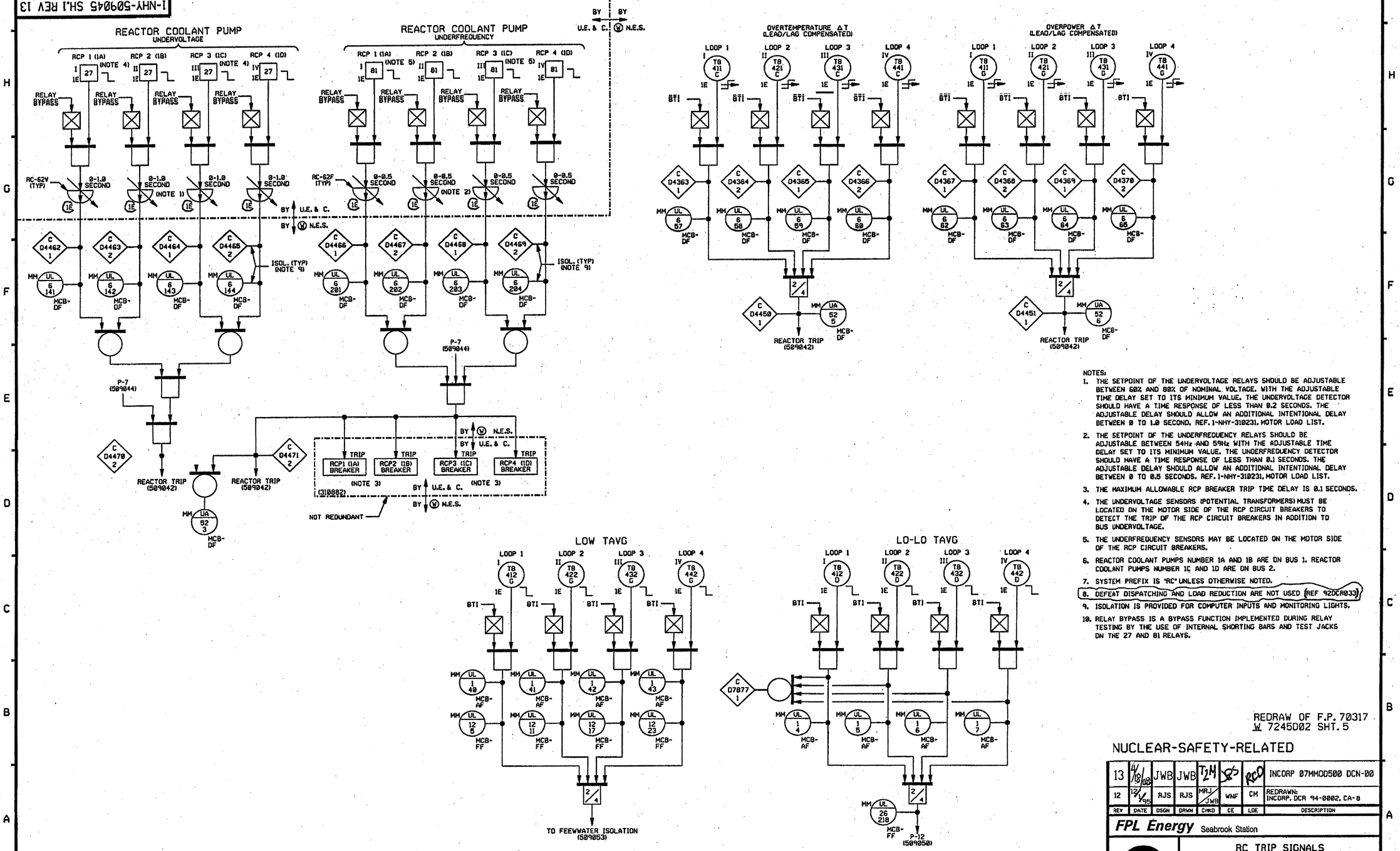

NOTES:

1. THE SETPOINT OF THE UNDERVOLTAGE RELAYS SHOULD BE ADJUSTABLE BETWEEN 60% AND 80% OF NOMINAL VOLTAGE. WITH THE ADJUSTABLE TIME DELAY SET TO ITS MINIMUM VALUE. THE UNDERVOLTAGE DETECTOR SHOULD HAVE A TIME RESPONSE OF LESS THAN 0.2 SECONDS. THE ADJUSTABLE DELAY SHOULD ALLOW AN ADDITIONAL INTENTIONAL DELAY BETWEEN 0 TO 1.0 SECOND. REF. 1-NHY-310231, MOTOR LOAD LIST.
2. THE SETPOINT OF THE UNDERFREQUENCY RELAYS SHOULD BE ADJUSTABLE BETWEEN 54Hz AND 59Hz WITH THE ADJUSTABLE TIME DELAY SET TO ITS MINIMUM VALUE. THE UNDERFREQUENCY DETECTOR SHOULD HAVE A TIME RESPONSE OF LESS THAN 0.1 SECONDS. THE ADJUSTABLE DELAY SHOULD ALLOW AN ADDITIONAL INTENTIONAL DELAY BETWEEN 0 TO 0.5 SECONDS. REF. 1-NHY-310231, MOTOR LOAD LIST.
3. THE MAXIMUM ALLOWABLE RCP BREAKER TRIP TIME DELAY IS 0.1 SECONDS.
4. THE UNDERVOLTAGE SENSORS (POTENTIAL TRANSFORMERS) MUST BE LOCATED ON THE MOTOR SIDE OF THE RCP CIRCUIT BREAKERS TO DETECT THE TRIP OF THE RCP CIRCUIT BREAKERS IN ADDITION TO BUS UNDERVOLTAGE.
5. THE UNDERFREQUENCY SENSORS MAY BE LOCATED ON THE MOTOR SIDE OF THE RCP CIRCUIT BREAKERS.
6. REACTOR COOLANT PUMPS NUMBER 1A AND 1B ARE ON BUS 1. REACTOR COOLANT PUMPS NUMBER 1C AND 1D ARE ON BUS 2.
7. SYSTEM PREFIX IS "RC" UNLESS OTHERWISE NOTED.
8. DEFEAT DISPATCHING AND LOAD REDUCTION ARE NOT USED (REF 92DCR033)
9. ISOLATION IS PROVIDED FOR COMPUTER INPUTS AND MONITORING LIGHTS.
10. RELAY BYPASS IS A BYPASS FUNCTION IMPLEMENTED DURING RELAY TESTING BY THE USE OF INTERNAL SHORTING BARS AND TEST JACKS ON THE 27 AND 81 RELAYS.

REDRAW OF F.P. 70317
W 7245D02 SHT. 5

NUCLEAR-SAFETY-RELATED

REV	DATE	DSGN	DRWN	CHKD	CE	LDE	DESCRIPTION
13	8/18/08	JWB	JWB	TJM		RCD	INCORP 07MMOD500 DCN-00
12	12/1/95	RJS	RJS	MRJ/JWB	WNF	CM	REDRAWN: INCORP. DCR 94-0002, CA-8

FPL Energy Seabrook Station

RC TRIP SIGNALS
W FUNCTIONAL DIAGRAMS
SHEET 1 OF 2

1-NHY-509045 SH.1 REV 13

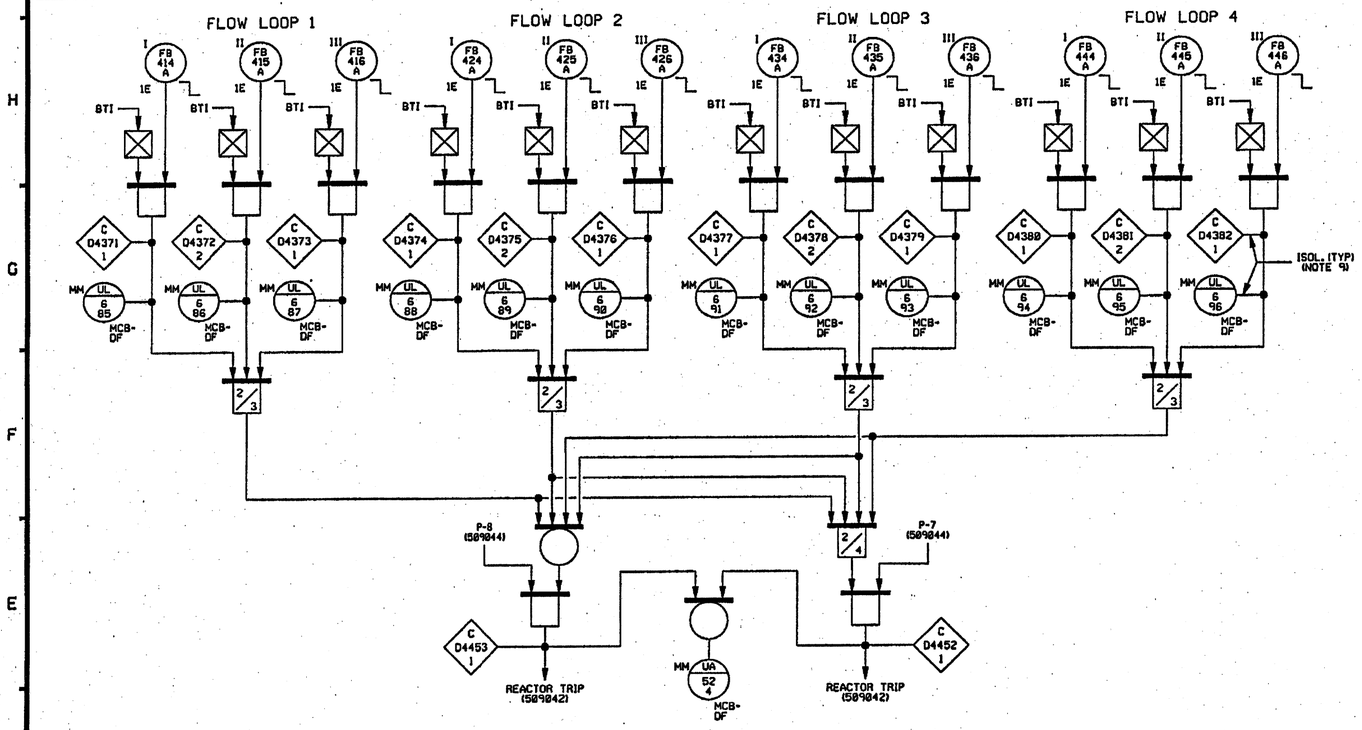

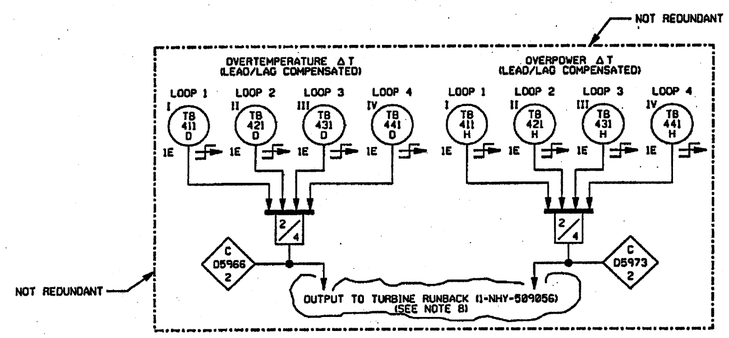

NOTES:
1. FOR NOTES AND REFEREFERENCES SEE 1-NHY-509045 SHEET 1 OF 2.

REDRAW OF F.P. 70317
W 7245D02 SHT. 5

NUCLEAR-SAFETY-RELATED

REV	DATE	DSGN	DRWN	CHKD	CE	LDE	DESCRIPTION
1	4/18/08	JWB	JWB	MRB	JWB	RCD	INCORP 07MMOD500 DCN 00
0	12/1/95	RJS	RJS	MRJ JWB	WNF	CM	REDRAWN: INCORP. DCR 94-0002, CA-8

FPL Energy Seabrook Station

RC TRIP SIGNALS
W FUNCTIONAL DIAGRAMS
SHEET 2 OF 2

1-NHY-509045 SH.2 REV 1

bdr file: N:\FUNC\PROD
FILE: 509046.DGN

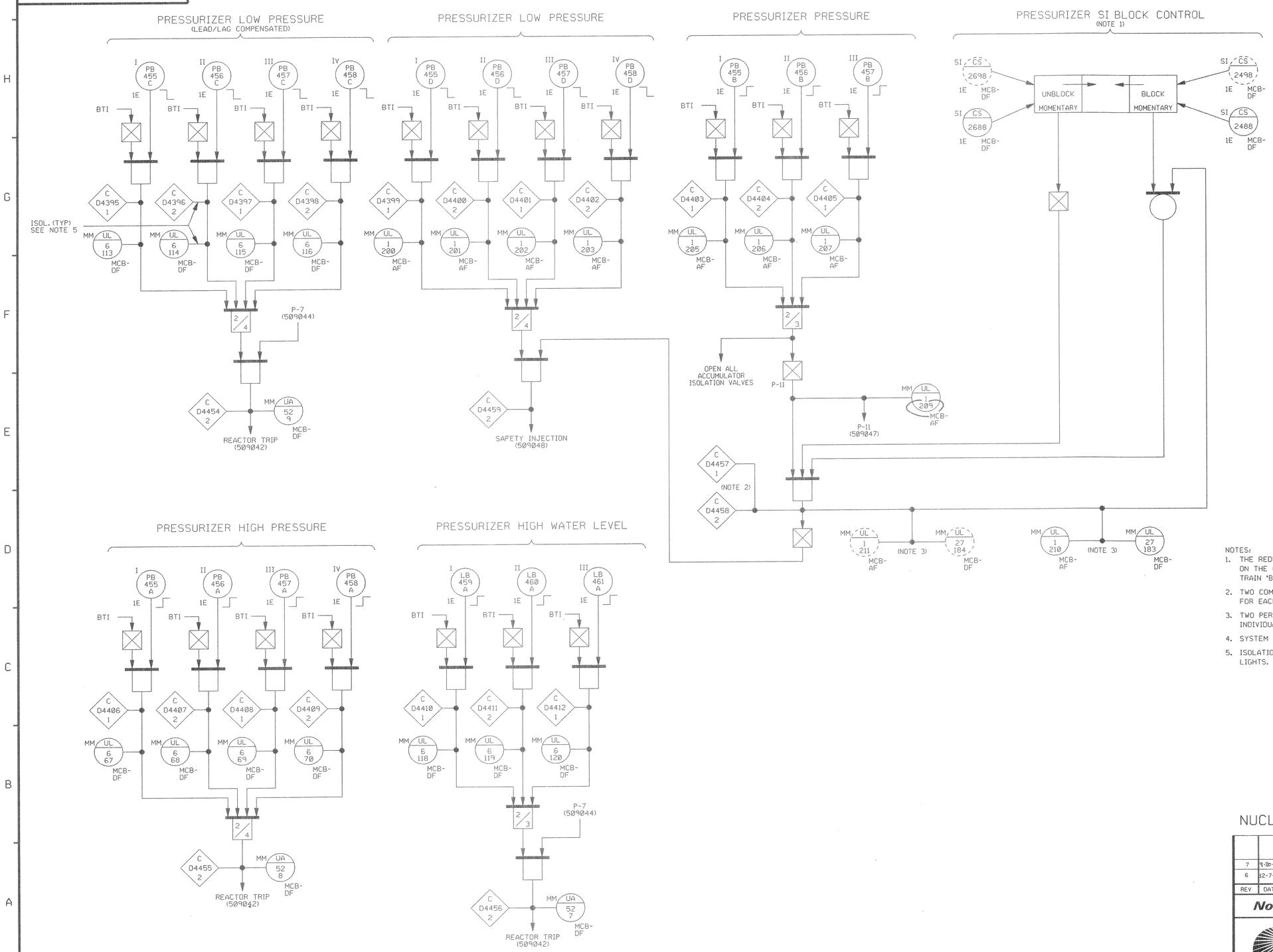

NOTES:

1. THE REDUNDANT MANUAL BLOCK CONTROLS CONSIST OF TWO CONTROLS ON THE CONTROL BOARD. ONE FOR EACH TRAIN. TRAIN 'B' SWITCH SHOWN AS.
2. TWO COMPUTER INPUTS ARE CONNECTED TO THIS CIRCUIT, INDIVIDUAL FOR EACH TRAIN.
3. TWO PERMISSIVE STATUS LIGHTS ARE CONNECTED TO THIS CIRCUIT, INDIVIDUAL FOR EACH TRAIN. TRAIN 'B' IS SHOWN AS.
4. SYSTEM PREFIX IS 'RC' UNLESS OTHERWISE NOTED.
5. ISOLATION IS PROVIDED FOR ALL COMPUTER INPUTS AND MONITORING LIGHTS.

REDRAW OF F.P. 70318
W 7245D02 SHT. 6

NUCLEAR-SAFETY-RELATED

REV	DATE	DSGN	DRWN	CHKD	CE	LDE	DESCRIPTION
7	9-20-00	—	MRJ	JWB	SPS	CM	INCORP. MMOD 96-619 DCN-00
6	12-7-95	RJS	RJS	MRJ JWB	WNF	CM	REDRAWN: INCORP. DCR 94-0002, CA-08

North Atlantic Energy Service Corporation

SEABROOK STATION

RC PRZR TRIP SIGNALS
W FUNCTIONAL DIAGRAMS

1-NHY-509046 REV 7

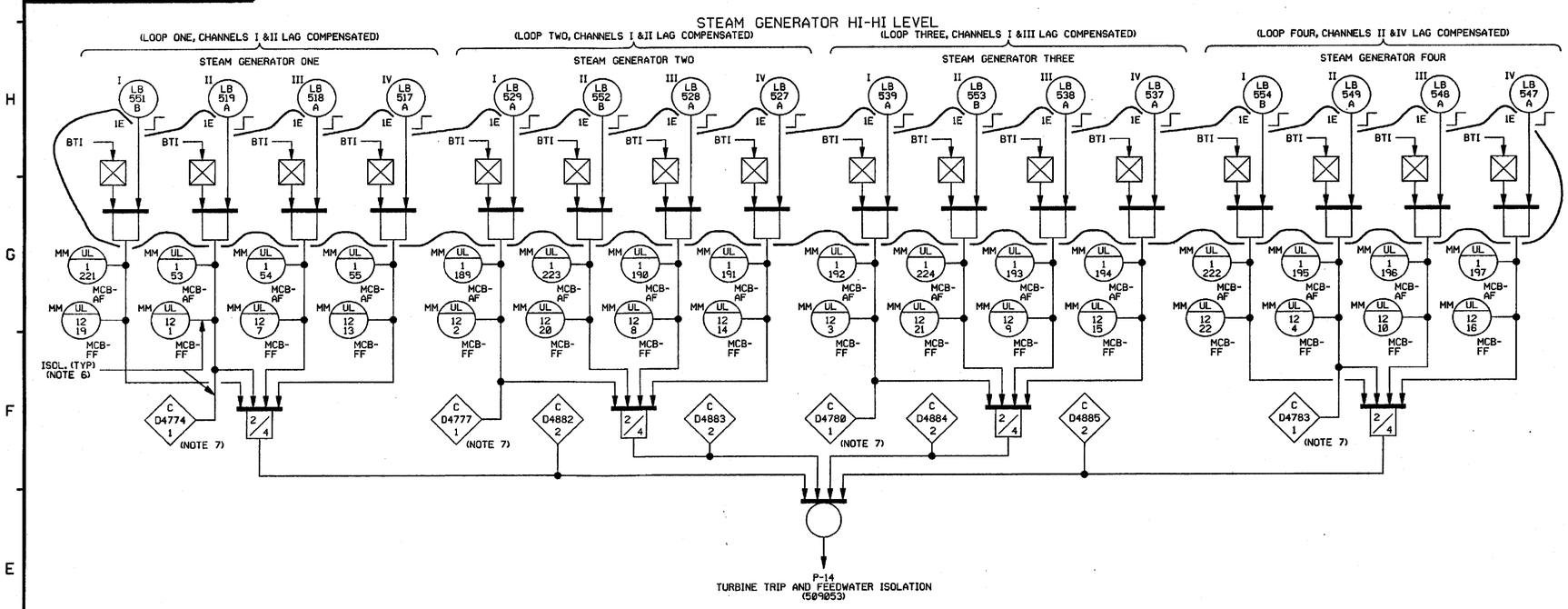

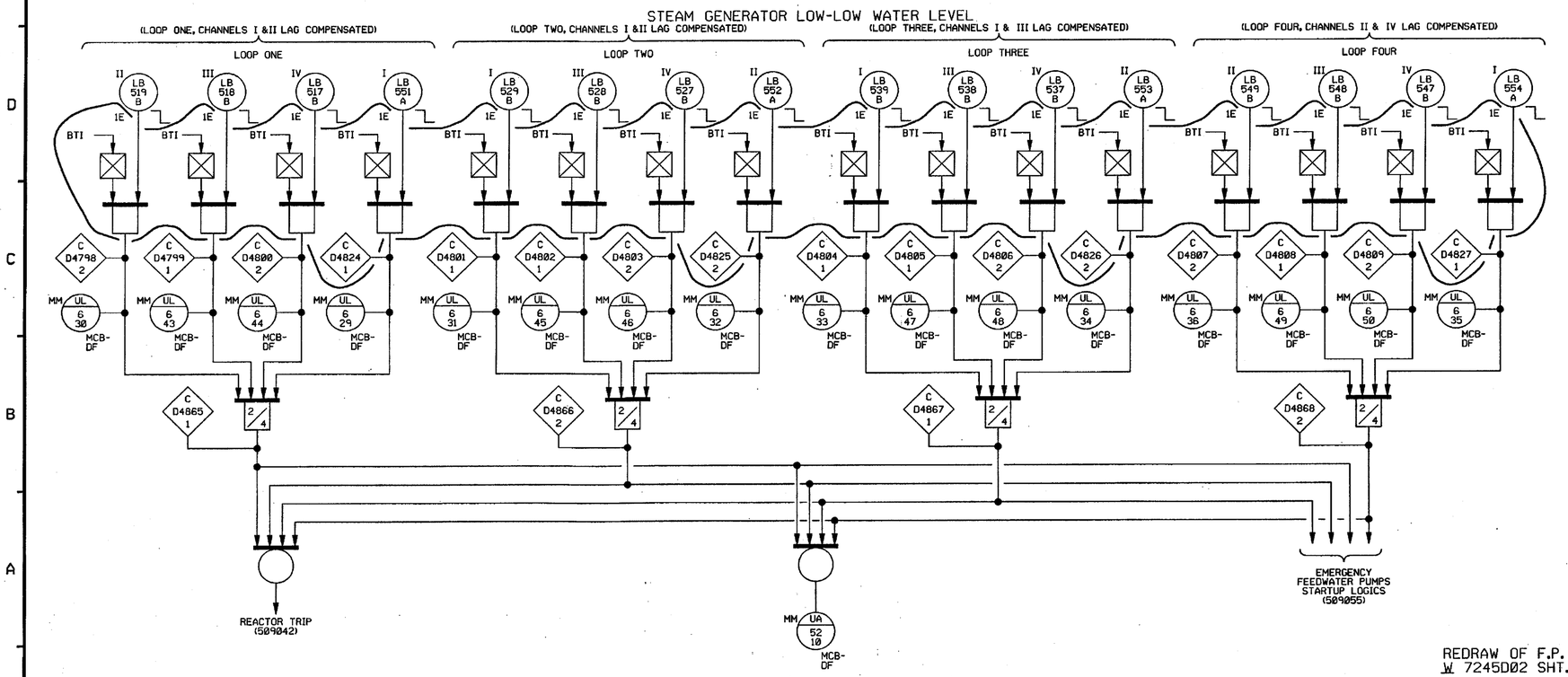

NOTES:

1. THE REDUNDANT MANUAL BLOCK CONTROLS CONSIST OF TWO CONTROLS ON THE CONTROL BOARD, ONE FOR EACH TRAIN. TRAIN 'B' IS SHOWN AS.
2. TWO COMPUTER INPUTS ARE CONNECTED TO THIS CIRCUIT, INDIVIDUAL FOR EACH TRAIN. TRAIN 'B' COMPUTER INPUT IS SHOWN AS.
3. TWO PERMISSIVE STATUS LIGHTS ARE CONNECTED TO THIS CIRCUIT, INDIVIDUAL FOR EACH TRAIN. TRAIN 'B' IS SHOWN AS.
4. SYSTEM PREFIX IS 'FW' UNLESS OTHERWISE NOTED.
5. STEAM GEN. LO-LO WATER LEVEL ALARMS NUMBER WERE ADDED PER DCN-650054A.
6. ISOLATION IS PROVIDED FOR ALL COMPUTER INPUTS AND MONITORING LIGHTS.
7. COMPUTER INPUTS D4774, D4777, D4780, D4783, D4811, D4821, D4822 & D4823 ARE ACTUATED WHEN ANY OF THE REDUNDANT BISTABLES TRIP.

REDRAW OF F.P. 70319
W 7245D02 SHT. 7

NUCLEAR-SAFETY-RELATED

REV	DATE	DSGN	DRWN	CHKD	CE	LDE	DESCRIPTION
11	12/11/95	RJS	RJS	MRJ/JWB	WVF	CH	REDRAWN: INCORP. DCR 94-0002, CA-8 EDITORIAL COMMENTS

North Atlantic Energy Service Corporation

SEABROOK STATION

FW STM GEN TRIP SIGNALS
W FUNCTIONAL DIAGRAMS
SHEET 1 of 2

1-NHY-509047 SH.1 REV 11

FILE: 509047A.DGN

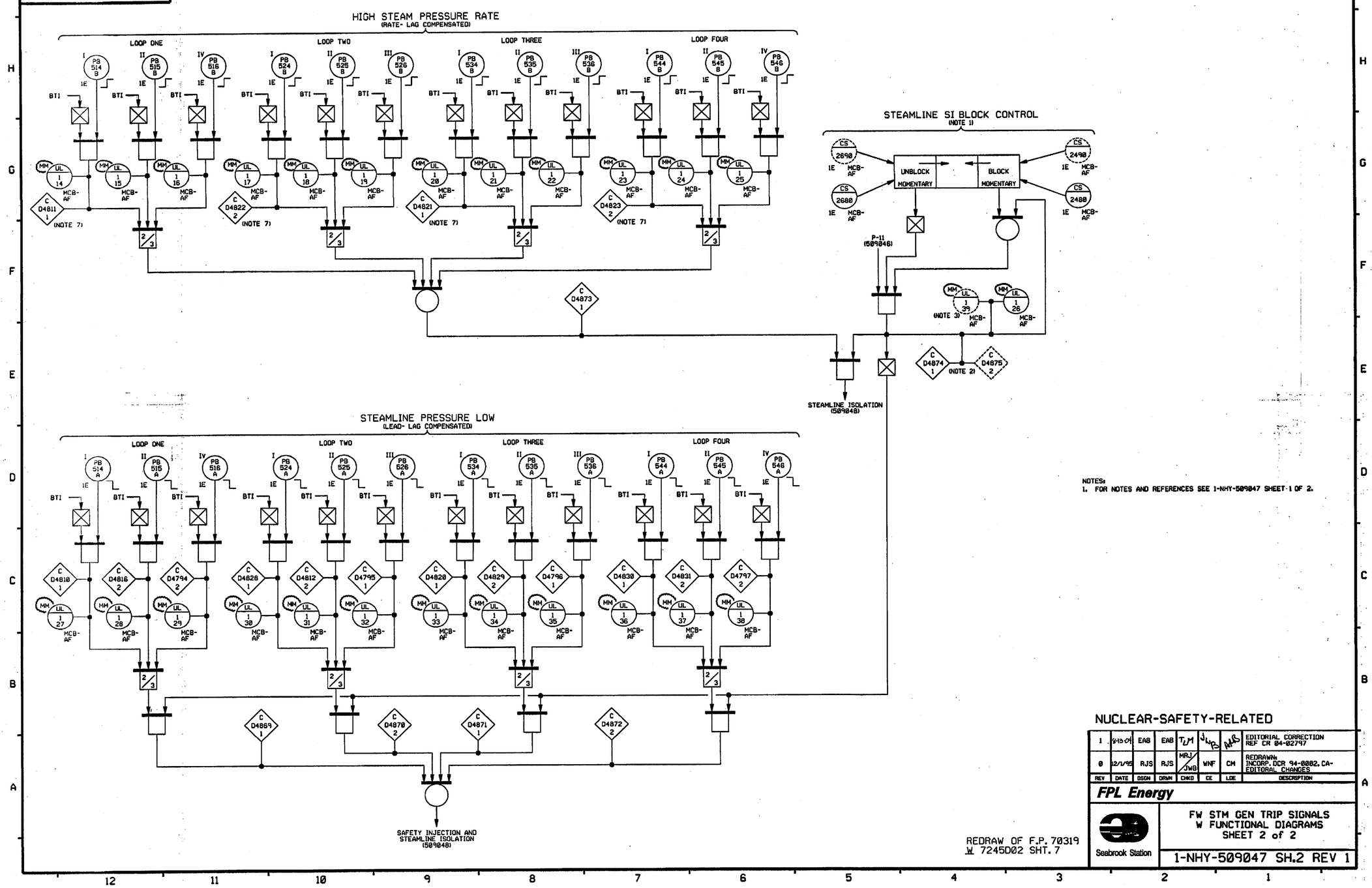

NOTES:
1. FOR NOTES AND REFERENCES SEE 1-NHY-509047 SHEET 1 OF 2.

REDRAW OF F.P. 70319
W 7245D02 SHT. 7

NUCLEAR-SAFETY-RELATED

REV	DATE	DSGN	DRAW	CHKD	CE	LDE	DESCRIPTION
1	5-13-04	EAB	EAB	TJM	JWB	MRB	EDITORIAL CORRECTION REF CR 04-02797
0	12/1/95	RJS	RJS	MRJ / JWB	WNF	CM	REDRAWN. INCORP. DCR 94-0002. CA-EDITORAL CHANGES

FPL Energy

Seabrook Station

FW STM GEN TRIP SIGNALS
W FUNCTIONAL DIAGRAMS
SHEET 2 of 2

1-NHY-509047 SH.2 REV 1

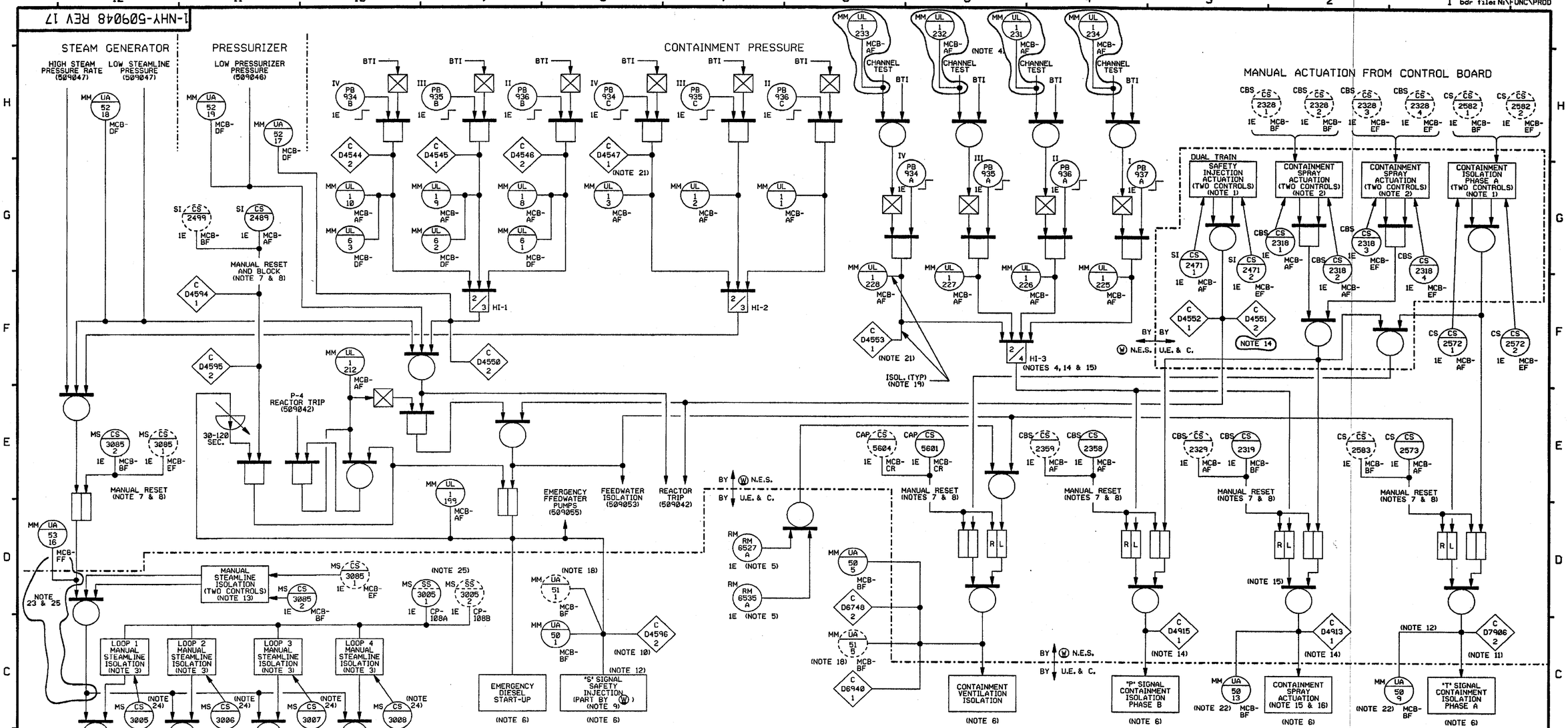

NOTES:

1. TWO MOMENTARY CONTROLS ON THE CONTROL BOARD, OPERATING EITHER CONTROL WILL ACTUATE, TRAIN "B" SHOWN AS.
2. THE MANUAL SPRAY ACTUATION CONSISTS OF FOUR MOMENTARY CONTROLS, ACTUATION WILL OCCUR ONLY IF TWO ASSOCIATED CONTROLS ARE OPERATED SIMULTANEOUSLY. TRAIN "B" SHOWN AS.
3. ONE MOMENTARY CONTROL PER LOOP ON THE CONTROL BOARD.
4. CONTAINMENT PRESSURE BISTABLES FOR SPRAY ACTUATION ARE ENERGIZE-TO-ACTUATE (OTHER BISTABLES ARE DE-ENERGIZE-TO-ACTUATE).
5. RM-RM-6535A/6527A IS THE TRAIN "A" CONTAINMENT RAD. MONITOR. RM-RM-6535B/6527B IS FOR TRAIN "B".
6. COMPONENTS ARE ALL INDIVIDUALLY SEALED IN (LATCHED), SO THAT LOSS OF THE ACTUATION SIGNAL WILL NOT CAUSE THESE COMPONENTS TO RETURN TO THE CONDITION HELD PRIOR TO THE ADVENT OF THE ACTUATION SIGNAL.
7. THE REDUNDANT MANUAL RESET CONSISTS OF TWO MOMENTARY CONTROLS ON THE CONTROL BOARD, ONE FOR EACH TRAIN. TRAIN "B" SHOWN AS.
8. SUPPLIED BY UE&C.
9. SAFETY INJECTION SEQUENCE REQUIREMENTS (IF SEQUENCING IS NECESSARY) ARE SPECIFIED BY WESTINGHOUSE N.E.S.
10. COMPUTER INPUT D4596 ORIGINATES FROM WESTINGHOUSE RELAY K615A.
11. COMPUTER INPUT D7906 ORIGINATES FROM WESTINGHOUSE RELAY K629A.
12. THE ACTUATION MAY BE DELAYED AND SEQUENCED IF THE EMERGENCY DIESEL POWER CAPABILITY IS LESS THAN THE TOTAL LOAD WITH ALL SYSTEMS STARTING. THE TIME DELAY(S), IF USED MAY NOT EXCEED THE MAXIMUM STARTING TIME REQUIREMENTS FOR EACH SYSTEM.
13. TWO CONTROLS ON THE CONTROL BOARD. OPERATING EITHER CONTROL WILL ACTUATE.
14. SOME ENGINEERED SAFEGUARDS FUNCTIONS ARE NOT WITHIN THE FUNCTIONAL DESIGN SCOPE OF WESTINGHOUSE NUCLEAR ENERGY SYSTEMS BUT ONLY SHOWN ON THIS SHEET AS THE FUNCTIONS ARE BUILT IN THE WESTINGHOUSE SUPPLIED EQUIPMENT.
15. THE 2 OUT OF 4 COINCIDENCE, MEMORY AND "OR" LOGIC ARE DUPLICATED WITHIN EACH TRAIN. SEPARATE OUTPUT RELAYS ARE ALSO PROVIDED IN EACH TRAIN. TO MINIMIZE FALSE CONTAINMENT SPRAY, ONE OUTPUT RELAY SHOULD START THE PUMPS WHILE ANOTHER SHOULD OPEN THE SYSTEM VALVES.
16. THE CONTAINMENT SPRAY SYSTEM SHOULD BE INDEPENDENT OF THE SAFETY INJECTION SYSTEM. IF THE CONDITIONS OF NOTE 12 APPLY, THE SEQUENCE INTERLOCK SHOULD BE SUCH THAT SPRAY WILL START WITHIN THE REQUIRED TIME INDEPENDENT OF THE SAFETY INJECTION SIGNAL STATUS.
17. SYSTEM PREFIX IS "SI" UNLESS OTHERWISE NOTED.
18. TRAIN B ANNUNCIATORS ARE SHOWN AS.
19. ISOLATION IS PROVIDED FOR COMPUTER INPUTS AND MONITORING LIGHTS.
20. SEE C-509041 FOR GENERAL NOTES & SYMBOL LEGEND.
21. COMPUTER INPUTS D4547 AND D4553 ARE ACTUATED WHEN ANY OF THE REDUNDANT BISTABLES TRIP.
22. THIS ANNUNCIATOR IS WIRED TO PROVIDE BOTH TRAIN A & B ALARM.
23. BY-PASS VALVES V204, V205, V206 AND V207 AND DRAIN VALVES V44, V45, V46 AND V47 (NOT SHOWN) ARE ACTUATED FROM TRAIN "A" MAIN STEAM ISOLATION. SEE LOGIC DIAGRAM 1-NHY-503669 & 503695 FOR OPERATION OF THESE VALVES.
24. SLOW MSIV CLOSURE.
25. FAST MSIV CLOSURE.

REFERENCE DRAWINGS:
509022
503667 (MS)
503668 (MS)
503915 (SI)
503256 (CBS)
503392 (CS)
503221 (CAP)
503298 (COP)
503341 (CS)

REDRAW OF F.P. 70320
W 7245D02 SHT. 8

NUCLEAR-SAFETY-RELATED

REV	DATE	DSGN	DRWN	CHKD	CE	LDE	DESCRIPTION
17	9-20-00	—	MRJ	JWB	SJB	Ma	INCORP. MMOD 96-619 DCN-00
16	12/1/95	RJS	RJS	MRJ JWB	WNF	CH	REDRAWN INCORP. DCR 94-0002, CA-8

North Atlantic Energy Service Corporation

SEABROOK STATION

SAFEGUARD ACTUATION SIGNALS W FUNCTIONAL DIAGRAMS

1-NHY-509048 REV 17

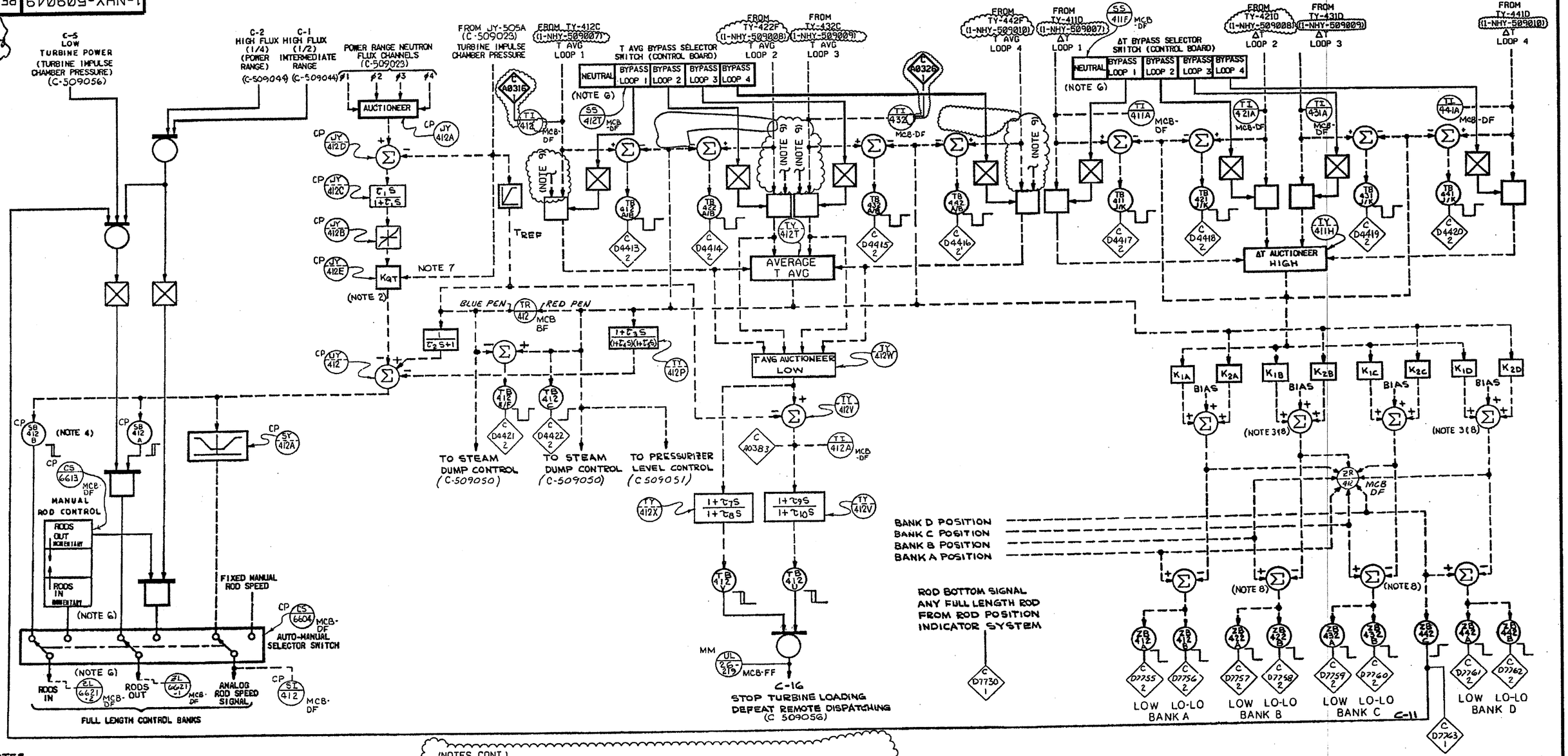

NOTES

1. ALL CIRCUITS ON THIS SHEET ARE NOT REDUNDANT.
2. KQT MAY VARY INVERSELY PROPORTIONAL TO LOAD WITH A FIXED LIMIT OR MAY VARY IN TWO DISCRETE STEPS WITH BREAK POINTS AT 30 TO 50 % AND 60 TO 80% TURBINE LOAD.
3. THE SUMMER OUTPUTS HAVE FIXED MANUALLY ADJUSTABLE UPPER LIMITS.
4. THE ROD DIRECTION BISTABLES NO. SB-412A AND SB-412B ARE "ENERGIZED TO ACTUATE".
5. SYSTEM PREFIX IS "RC" UNLESS OTHERWISE NOTED.
6. THESE CONTROLS ON THE CONTROL BOARD ARE SUPPLIED BY U.E.&C.
7. REFER TO C-509023 FOR ACTUAL HARDWARE IMPLEMENTATION
8. REFER TO C-509030 FOR ACTUAL HARDWARE IMPLEMENTATION

(NOTES CONT.)

9. BYPASS OPERATIONS AS FOLLOWS:

	T AVG INPUT TO TY-412T			
LOOP →	1	2	3	4
BYPASS NOT SELECTED →	LOOP 1	LOOP 2	LOOP 3	LOOP 4
BYPASS SELECTED →	LOOP 4	LOOP 1	LOOP 2	LOOP 3

REFERENCE DWGS
M-506628 F.P. 70001 SH 23, 32, 30, 31
C-509023
C-509032
C-509030
C-509031

ISSUED-FOR-CONSTRUCTION

REV	DATE	DRWN	CHKD	CE	LDE	DESCRIPTION
8	10/14/05	TPG	MRB	RCD	RS	CR 05-01761-01 EDITORIAL CHANGES
7	4/22/05	MRB	TLM	RCD	CM	INCORP DCR 04-001, DCN-00
6	11/6/92	JWB	WDS	RWM	BEB	INCORP DCR 92-033, CA-01

FPL Energy Seabrook Station

ROD CONTROL & BLOCKS W FUNCTIONAL DIAGRAMS

1-NHY-509049 REV 07

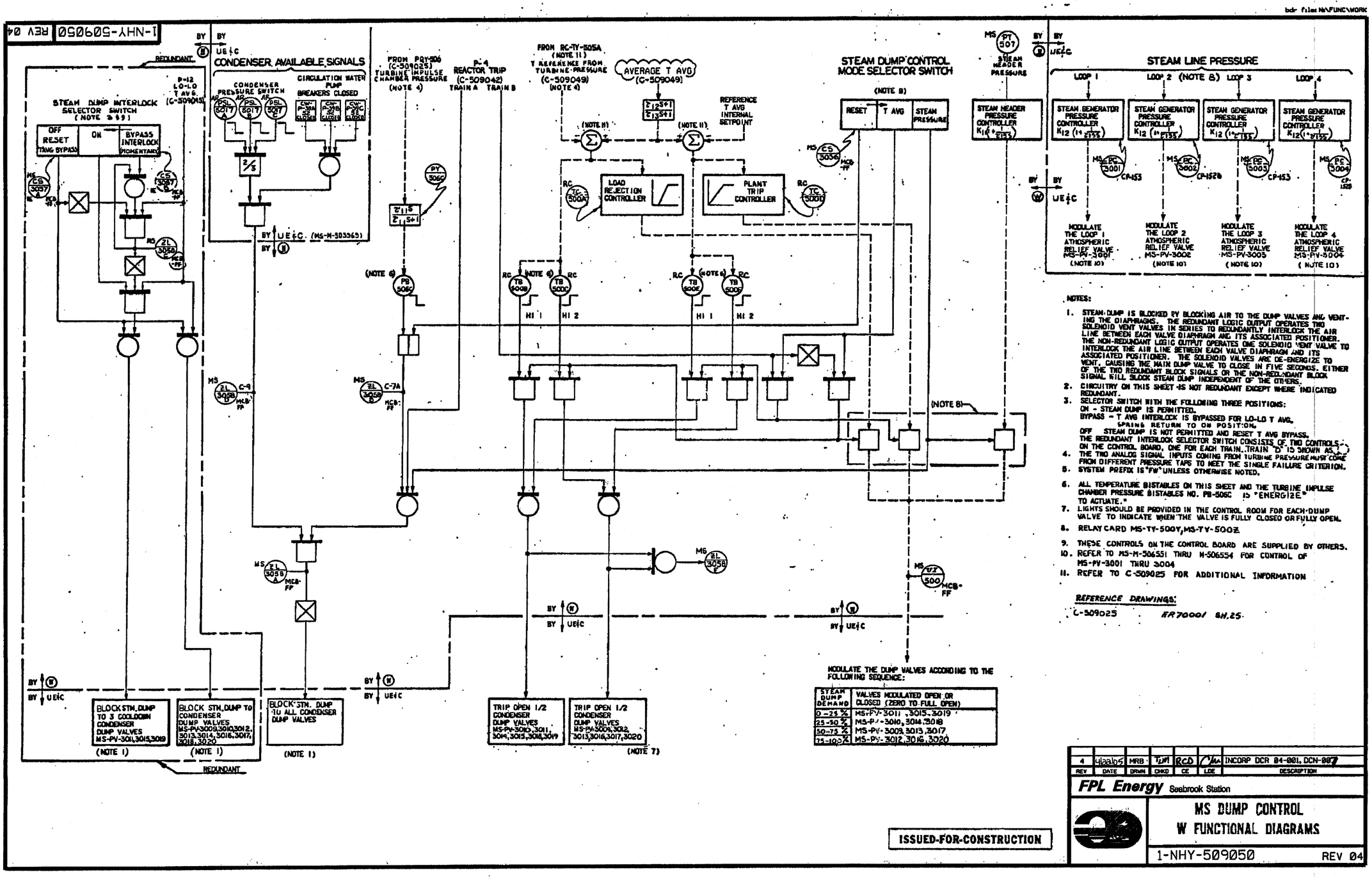

NOTES:

1. STEAM DUMP IS BLOCKED BY BLOCKING AIR TO THE DUMP VALVES AND VENTING THE DIAPHRAGMS. THE REDUNDANT LOGIC OUTPUT OPERATES TWO SOLENOID VENT VALVES IN SERIES TO REDUNDANTLY INTERLOCK THE AIR LINE BETWEEN EACH VALVE DIAPHRAGM AND ITS ASSOCIATED POSITIONER. THE NON-REDUNDANT LOGIC OUTPUT OPERATES ONE SOLENOID VENT VALVE TO INTERLOCK THE AIR LINE BETWEEN EACH VALVE DIAPHRAGM AND ITS ASSOCIATED POSITIONER. THE SOLENOID VALVES ARE DE-ENERGIZE TO VENT, CAUSING THE MAIN DUMP VALVE TO CLOSE IN FIVE SECONDS. EITHER OF THE TWO REDUNDANT BLOCK SIGNALS OR THE NON-REDUNDANT BLOCK SIGNAL WILL BLOCK STEAM DUMP INDEPENDENT OF THE OTHERS.
2. CIRCUITRY ON THIS SHEET IS NOT REDUNDANT EXCEPT WHERE INDICATED REDUNDANT.
3. SELECTOR SWITCH WITH THE FOLLOWING THREE POSITIONS:
   ON - STEAM DUMP IS PERMITTED.
   BYPASS - T AVG INTERLOCK IS BYPASSED FOR LO-LO T AVG. SPRING RETURN TO ON POSITION.
   OFF STEAM DUMP IS NOT PERMITTED AND RESET T AVG BYPASS.
   THE REDUNDANT INTERLOCK SELECTOR SWITCH CONSISTS OF TWO CONTROLS ON THE CONTROL BOARD, ONE FOR EACH TRAIN. TRAIN "D" IS SHOWN AS.
4. THE TWO ANALOG SIGNAL INPUTS COMING FROM TURBINE PRESSURE MUST COME FROM DIFFERENT PRESSURE TAPS TO MEET THE SINGLE FAILURE CRITERION.
5. SYSTEM PREFIX IS "FW" UNLESS OTHERWISE NOTED.
6. ALL TEMPERATURE BISTABLES ON THIS SHEET AND THE TURBINE IMPULSE CHAMBER PRESSURE BISTABLES NO. PB-506C IS "ENERGIZE" TO ACTUATE.
7. LIGHTS SHOULD BE PROVIDED IN THE CONTROL ROOM FOR EACH DUMP VALVE TO INDICATE WHEN THE VALVE IS FULLY CLOSED OR FULLY OPEN.
8. RELAY CARD MS-TY-500Y, MS-TY-500Z
9. THESE CONTROLS ON THE CONTROL BOARD ARE SUPPLIED BY OTHERS.
10. REFER TO MS-M-506551 THRU M-506554 FOR CONTROL OF MS-PV-3001 THRU 3004
11. REFER TO C-509025 FOR ADDITIONAL INFORMATION

REFERENCE DRAWINGS:

C-509025 ER70001 SH.25

REV	DATE	DRWN	CHKD	CE	LDE	DESCRIPTION
4	4/22/05	MRB	TJM	RCD	CM	INCORP DCR 04-001, DCN-007

FPL Energy Seabrook Station

MS DUMP CONTROL
W FUNCTIONAL DIAGRAMS

1-NHY-509050 REV 04

ISSUED-FOR-CONSTRUCTION

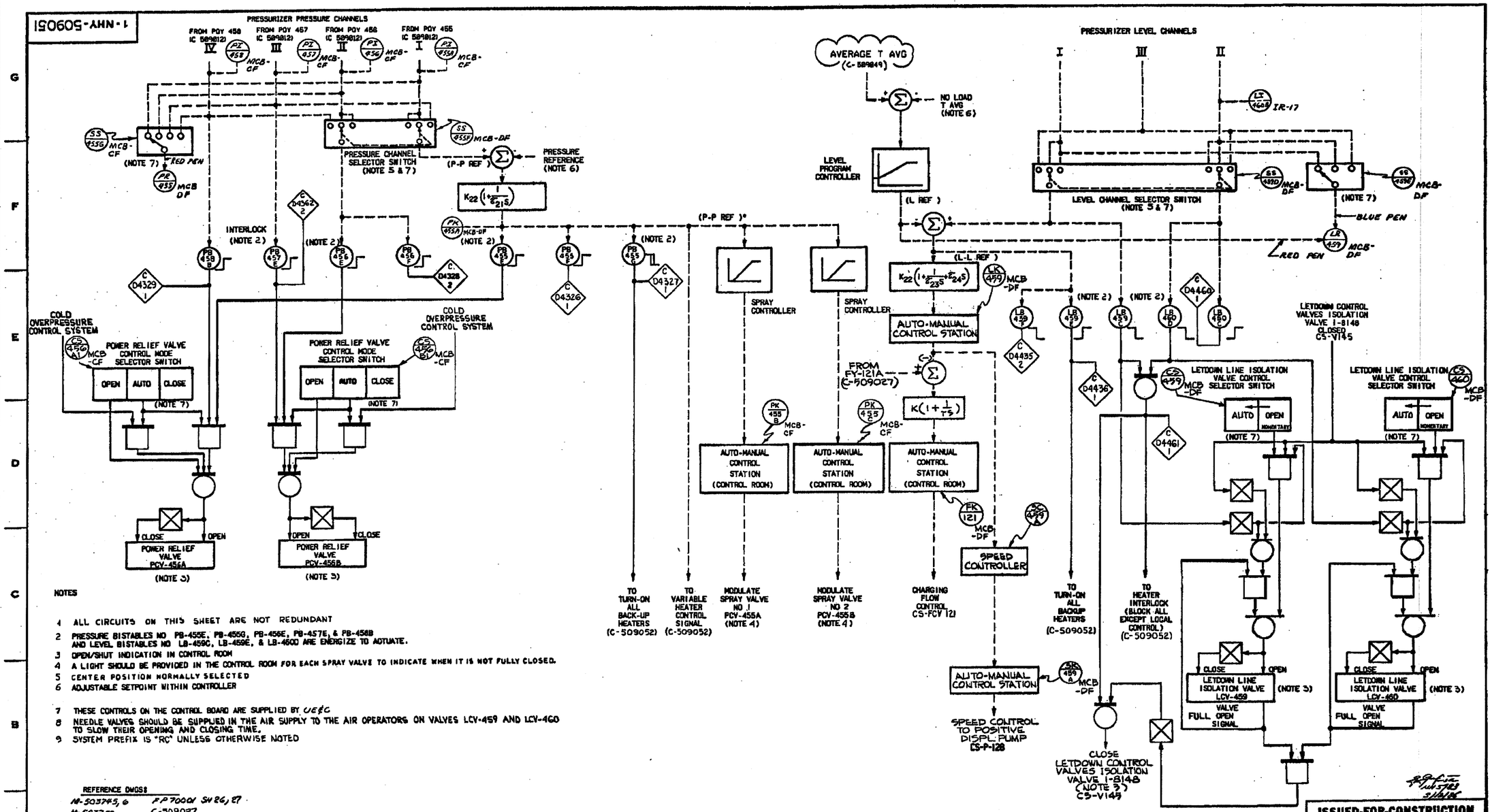

NOTES

1 ALL CIRCUITS ON THIS SHEET ARE NOT REDUNDANT
2 PRESSURE BISTABLES NO PB-455E, PB-455G, PB-456E, PB-457E, & PB-458B AND LEVEL BISTABLES NO LB-459C, LB-459E, & LB-460D ARE ENERGIZE TO ACTUATE.
3 OPEN/SHUT INDICATION IN CONTROL ROOM
4 A LIGHT SHOULD BE PROVIDED IN THE CONTROL ROOM FOR EACH SPRAY VALVE TO INDICATE WHEN IT IS NOT FULLY CLOSED.
5 CENTER POSITION NORMALLY SELECTED
6 ADJUSTABLE SETPOINT WITHIN CONTROLLER
7 THESE CONTROLS ON THE CONTROL BOARD ARE SUPPLIED BY UE&C
8 NEEDLE VALVES SHOULD BE SUPPLIED IN THE AIR SUPPLY TO THE AIR OPERATORS ON VALVES LCV-459 AND LCV-460 TO SLOW THEIR OPENING AND CLOSING TIME.
9 SYSTEM PREFIX IS "RC" UNLESS OTHERWISE NOTED

REFERENCE DWGS:
M-503745, 6 — FP70001 SH 26, 27
M-503752 — C-509027
M-503373 (CS) — C-509026
M-503367 (CS)
M-506276 (CS)
M-506637
M-506638
M-506639
M-506641

REDRAW OF FP70323
W 7245D02 SHT. 11

DWG TRANSFERRED TO CUSTODY OF NHY AT REV 3 LTR SBO 40722 DTD 10/14/96

REV	DATE	DRWN	CHK'D	CE	LDE	DESCRIPTION
7	04/22/05	MRB	TJM	RCD	CM	INCORP DCR 04-001, DCN-007
6	1/31/03	SAC	JWB	ARB	CM	CORRECTIVE UPDATE REF CR 02-09613

ISSUED-FOR-CONSTRUCTION

RC PRZR PRESS & LVL CTL W FUNCTIONAL DIAGRAM

FPL Energy Seabrook Station

1-NHY-509051

c:\dgn\functwork\509051.dgn Mar. 22, 2005 12:55:16

1-NHY-509052

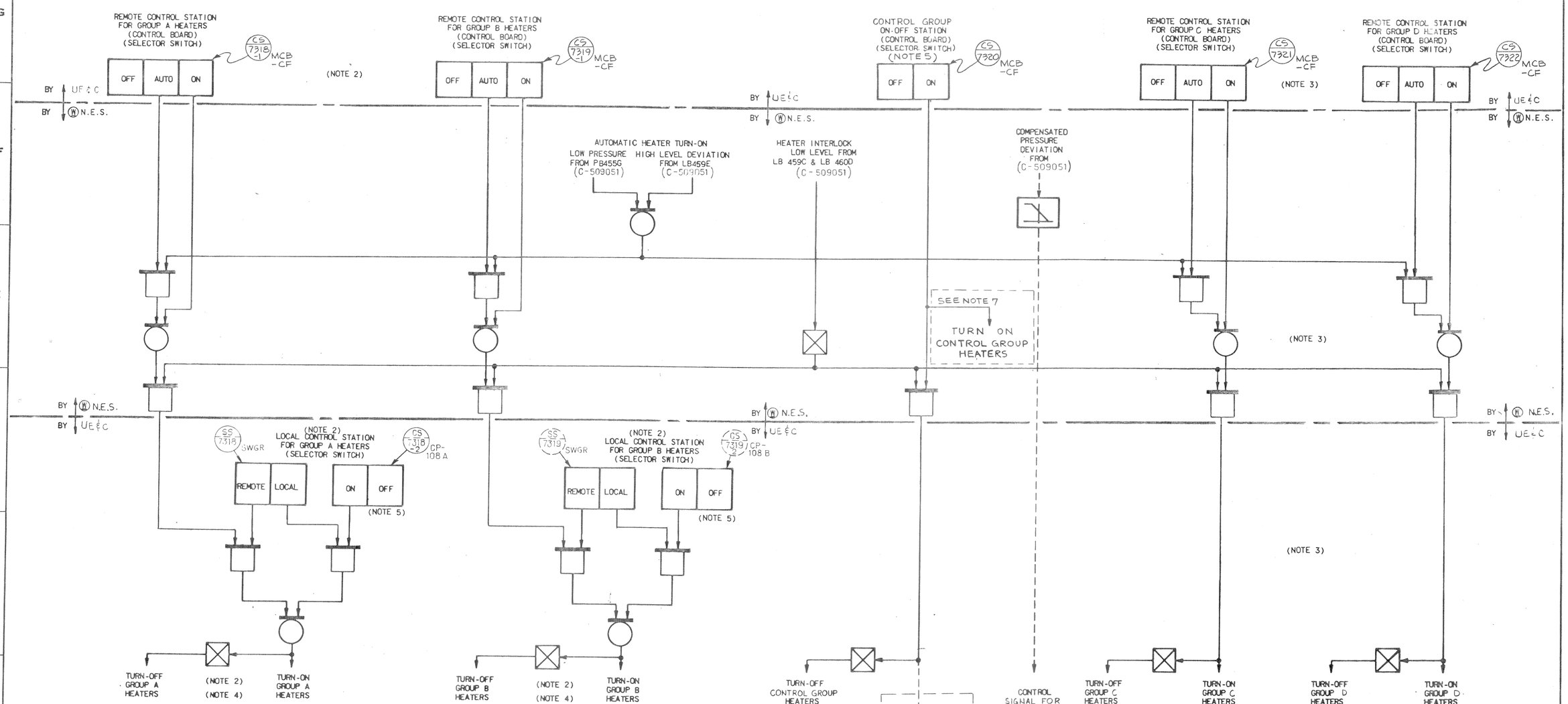

NOTES:

1. ALL CIRCUITS ON THIS SHEET ARE NOT REDUNDANT.
2. GROUP A AND GROUP B HEATERS MUST BE ON SEPARATE VITAL POWER SUPPLIES WITH THE LOCAL CONTROL SEPARATED SO THAT ANY SINGLE FAILURE DOES NOT DEFEAT BOTH. SHOW TRAIN "B" SWITCH AS 7
3. THE NUMBER OF BACK-UP HEATER GROUPS IS TYPICAL. THE ACTUAL NUMBER OF GROUPS MAY DIFFER DEPENDING ON ELECTRICAL LOADING REQUIREMENTS.
4. BACK-UP HEATER STATUS INDICATION IN CONTROL ROOM.
5. PRECAUTIONS SHOULD BE TAKEN TO AVOID MANUAL HEATER OPERATION, WHICH WOULD CAUSE HEATER DAMAGE, IF THE WATER LEVEL UNCOVERS THE HEATERS. PRECAUTIONS SHOULD ALSO BE TAKEN TO VERIFY THAT PRZR LOW LEVEL ALARMS HAVE CLEARED BEFORE RECLOSING THE CONTROL GROUP BKR AFTER A LOW BKR TRIP.
6. SYSTEM PREFIX IS "RC" UNLESS OTHERWISE NOTED.
7. WESTINGHOUSE DID NOT PROVIDE PRZR LOW LEVEL INTERLOCK CONTACTS FOR USE IN THE CONTROL GROUP BKR CLOSING CIRCUIT. ALTHOUGH THIS INTERLOCK IS SHOWN FUNCTIONALLY ON W DWG 7245D02, SH.12 SIMILAR TO THE BKR CLOSING CKTS FOR THE BACKUP GROUPS. PRZR LOW LEVEL WILL TRIP OPEN THE CONTROL BKR AS SHOWN AND ONCE TRIPPED THE BKR CAN BE RECLOSED ONLY BY SWITCHING CS-7320 TO "OFF" AND THEN TO "ON".

REFERENCE DRAWINGS:

M-503749
M-503750
M-503751

REDRAWN OF F.P. 70324
W 7245D02 SH.12

REV	DATE	DRWN	CHKD	CE	LDE	DESCRIPTION
5	10/15/86	SJB	JM	RPL	NA	9763-C-509052 SUPERCEDES UE&C DWG.

REV. NO.	DATE	DESCRIPTION	PE	DWN. BY	CKD. BY	RES. ENG.	SDE	QAE	PEM
4	1-28-86	ECA99109947A	RPN	EFH		ARV		–	
(W) 3	7/21/84	EDITORIAL CHANGE	RPN			ARV		–	
(W) 2	5/20/83	REV. PER ENG. ASSURANCE AUDIT REPORT NHE-7	RPN	GWR					
(W) 1	8/21/81	FIRST ISSUE	RPN	LOR		ARV		–	

DWG. TRANSFERRED TO CUSTODY OF NHY AT REV. 4
LTR. SBU #10722 DTD. 10/17/86

ISSUED-FOR-CONSTRUCTION

RC PRZR HTR CONTROL
W FUNCTIONAL DIAGRAMS

New Hampshire Yankee — Seabrook Station

1-NHY-509052

12

1-NHY- 509053

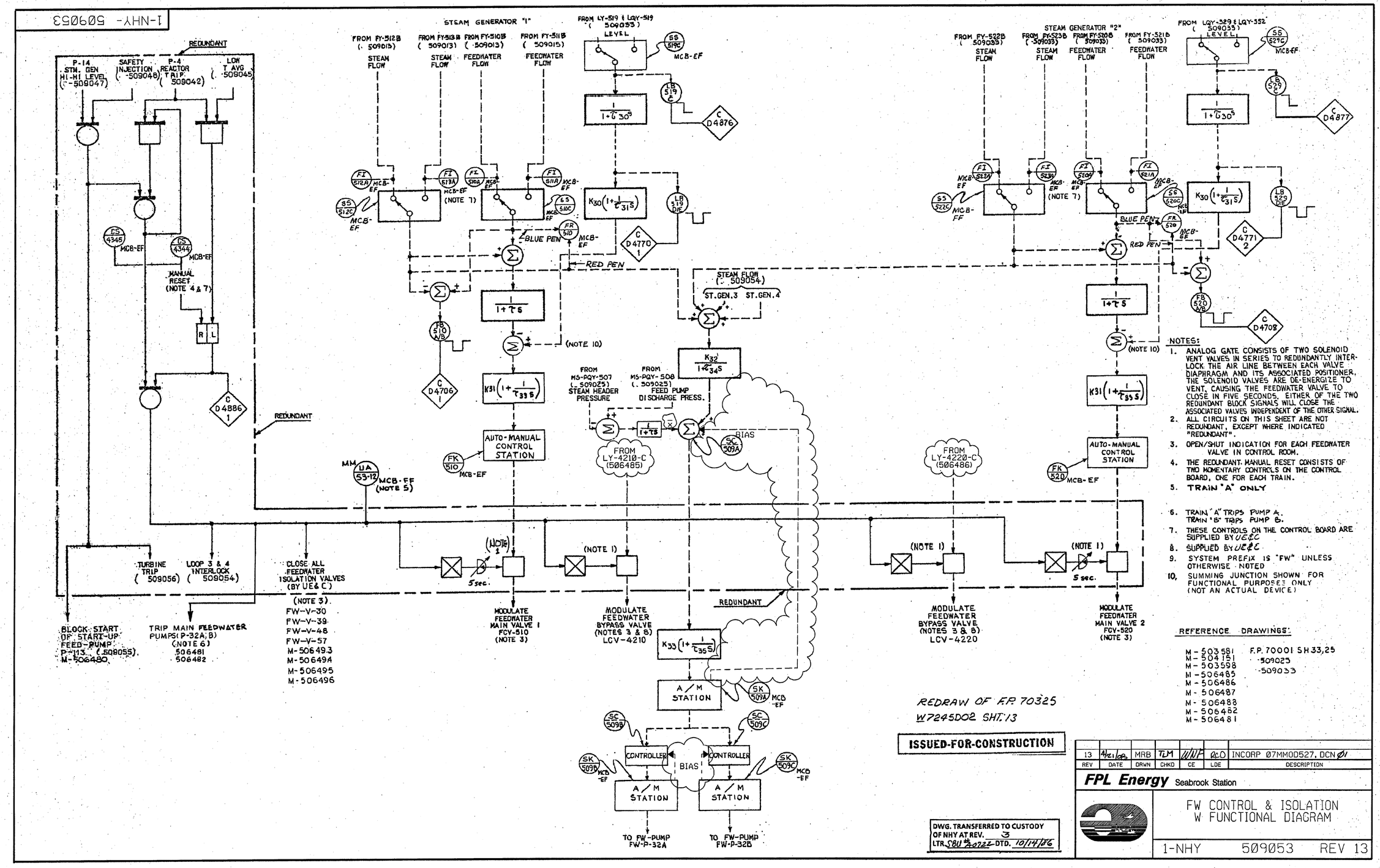

NOTES:

1. ANALOG GATE CONSISTS OF TWO SOLENOID VENT VALVES IN SERIES TO REDUNDANTLY INTERLOCK THE AIR LINE BETWEEN EACH VALVE DIAPHRAGM AND ITS ASSOCIATED POSITIONER. THE SOLENOID VALVES ARE DE-ENERGIZE TO VENT, CAUSING THE FEEDWATER VALVE TO CLOSE IN FIVE SECONDS. EITHER OF THE TWO REDUNDANT BLOCK SIGNALS WILL CLOSE THE ASSOCIATED VALVES INDEPENDENT OF THE OTHER SIGNAL.
2. ALL CIRCUITS ON THIS SHEET ARE NOT REDUNDANT, EXCEPT WHERE INDICATED "REDUNDANT".
3. OPEN/SHUT INDICATION FOR EACH FEEDWATER VALVE IN CONTROL ROOM.
4. THE REDUNDANT MANUAL RESET CONSISTS OF TWO MOMENTARY CONTROLS ON THE CONTROL BOARD, ONE FOR EACH TRAIN.
5. TRAIN "A" ONLY
6. TRAIN "A" TRIPS PUMP A. TRAIN "B" TRIPS PUMP B.
7. THESE CONTROLS ON THE CONTROL BOARD ARE SUPPLIED BY UE&C
8. SUPPLIED BY UE&C
9. SYSTEM PREFIX IS "FW" UNLESS OTHERWISE NOTED
10. SUMMING JUNCTION SHOWN FOR FUNCTIONAL PURPOSES ONLY (NOT AN ACTUAL DEVICE)

REFERENCE DRAWINGS:

M-503581
M-504151
M-503598
M-506485
M-506486
M-506487
M-506488
M-506482
M-506481
F.P. 70001 SH 33,25
509025
509033

REDRAW OF F.P. 70325
W7245D02 SHT. 13

ISSUED-FOR-CONSTRUCTION

DWG. TRANSFERRED TO CUSTODY OF NHY AT REV. 3 LTR. SBU #20722 DTD. 10/14/86

REV	DATE	DRWN	CHKD	CE	LDE	DESCRIPTION
13	4/21/08	MRB	TLM		RCO	INCORP 07MMOD527, DCN 01

FPL Energy Seabrook Station

FW CONTROL & ISOLATION
W FUNCTIONAL DIAGRAM

1-NHY 509053 REV 13

bdr file: N:\FUNC\WORK

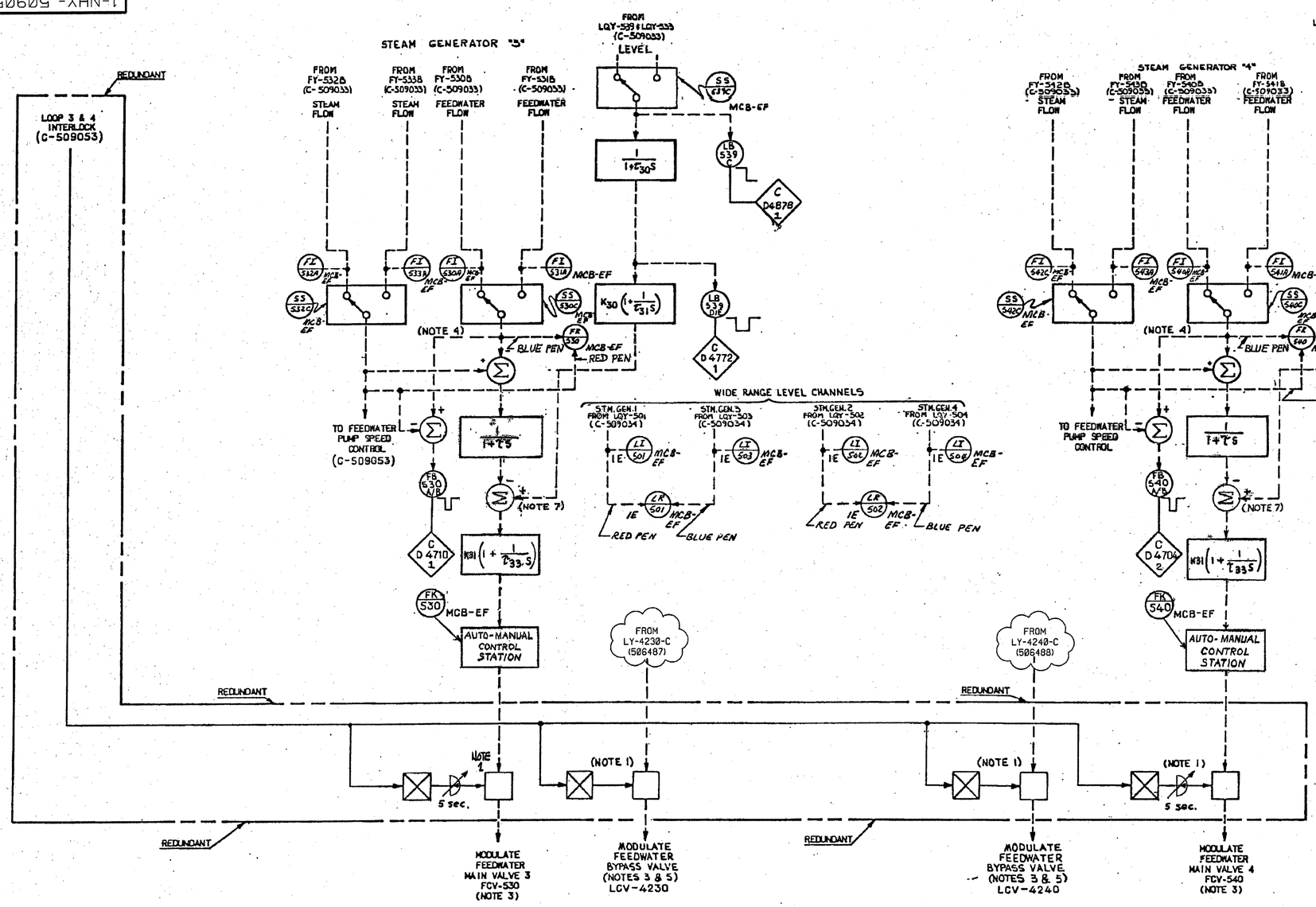

NOTES:

1. ANALOG GATE CONSISTS OF TWO SOLENOID VENT VALVES IN SERIES TO REDUNDANTLY INTERLOCK THE AIR LINE BETWEEN EACH VALVE DIAPHRAGM AND ITS ASSOCIATED POSITIONER. THE SOLENOID VALVES ARE DE-ENERGIZE TO VENT, CAUSING THE FEEDWATER VALVE TO CLOSE IN FIVE SECONDS. EITHER OF THE TWO REDUNDANT BLOCK SIGNALS WILL CLOSE THE ASSOCIATED VALVES INDEPENDENT OF THE OTHER SIGNAL.
2. ALL CIRCUITS ON THIS SHEET ARE NOT REDUNDANT, EXCEPT WHERE INDICATED "REDUNDANT."
3. OPEN/SHUT INDICATION FOR EACH FEEDWATER MAIN VALVE IN CONTROL ROOM.
4. THESE CONTROLS ON THE CONTROL BOARD ARE SUPPLIED BY UE&C
5. SUPPLIED BY UE&C
6. SYSTEM PREFIX IS "FW" UNLESS OTHERWISE NOTED.
7. SUMMING JUNCTION SHOWN FOR FUNCTIONAL PURPOSES ONLY. (NOT AN ACTUAL DEVICE)

REFERENCE DRAWINGS:

M-503583
M-506485
M-506486
M-506487
M-506488
E.P. 70001 SH.33,34
C-509033
C-509034

NUCLEAR SAFETY RELATED

REDRAW OF F.P.70326
W7275D04 SHT.14

ISSUED-FOR-CONSTRUCTION

REV	DATE	DRWN	CHKD	CE	LDE	DESCRIPTION
8	4/21/06	MRB	TLM	BWF	RCO	INCORP 07MM0D527, DCN-01
7	12/6/95	MRB	JWB	BAW	CM	INCORP 94DCR039, DCN-03

FPL Energy Seabrook Station

FW CONTROL & ISOLATION
W FUNCTIONAL DIAGRAM

1-NHY 509054 REV 8

bdr file: N:\FUNC\PROD

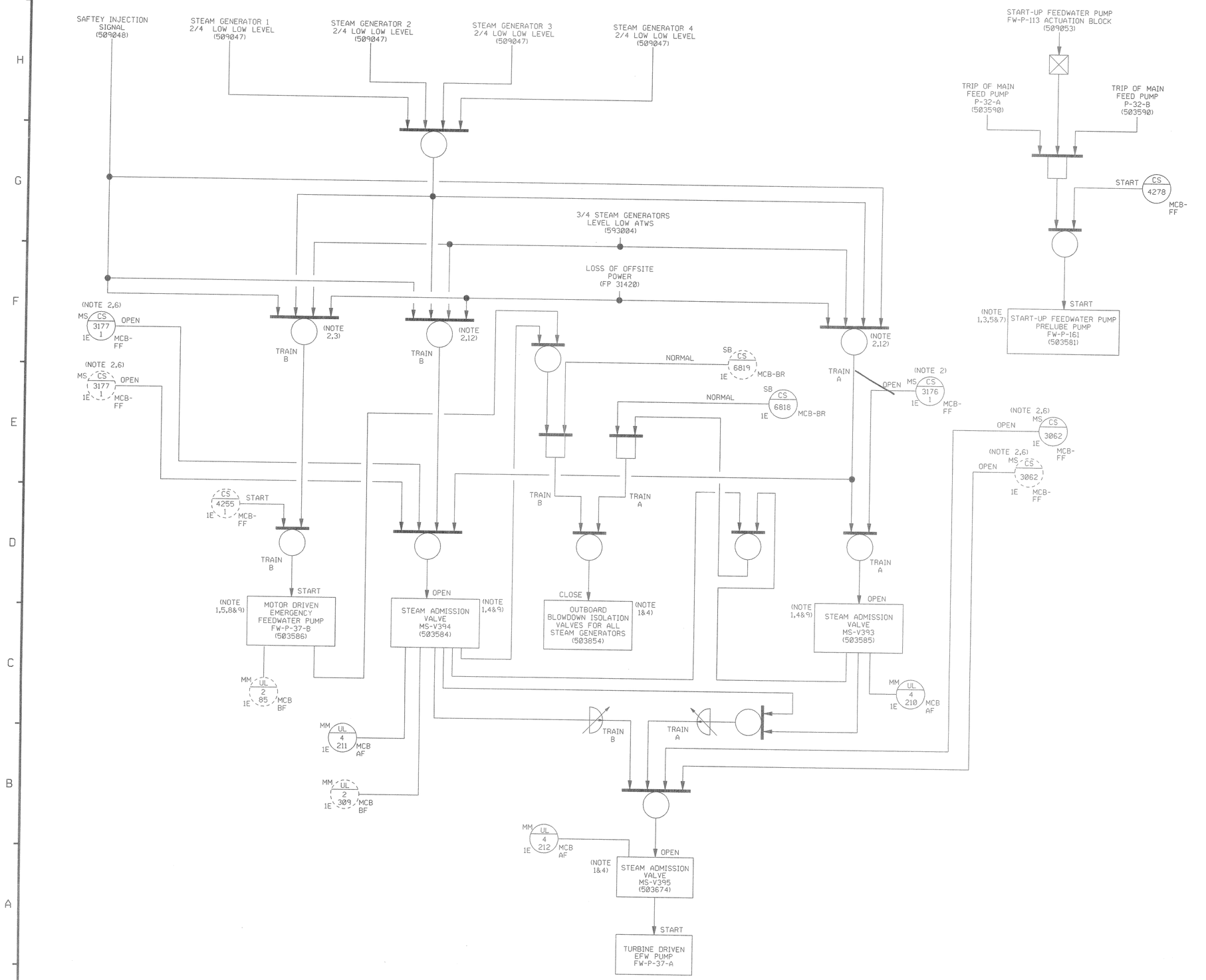

NOTES:

1. THE AUTOMATIC AND MANUAL MCB START SIGNALS FOR THE EMERGENCY AND START-UP FEEDWATER PUMP ARE SHOWN WITHOUT ALL INTERLOCKS. SEE THE LOGIC DRAWING LISTED BY EACH FUNCTION FOR THE STOP, REMOTE SAFE SHUTDOWN, COMPLETE START LOGIC, OR HELB AND 'T' SIGNAL TO STEAM BLOWDOWN ISOLATION VALVES.
2. REMOTE SAFE SHUTDOWN SELECTOR SWITCH MUST BE POSITIONED TO 'REMOTE' FOR THIS CONTROL. ALARM IS ACTIVATED WHEN IN 'LOCAL'.
3. MANUAL STOP AND PULL TO LOCK OVERRIDES THE AUTOMATIC START. MANUAL STOP OVERRIDE ACTUATES AN ALARM IN THE CONTROL ROOM.
4. OPEN/SHUT INDICATION IN THE CONTROL ROOM.
5. PUMP OPERATING LIGHTS IN CONTROL ROOM.
6. DUAL TRAIN CONTROL SWITCH.
7. PRELUBE PUMP OPERATION IS PART OF START-UP FEEDWATER PUMP START LOGIC (503580)
8. THE PUMP START MAY BE DELAYED AND SEQUENCED IF THE EMERGENCY DIESEL POWER CAPABILITY IS LESS THAN THE TOTAL LOAD WITH ALL SYSTEMS STARTING. THE TIME DELAY, IF USED MAY NOT EXCEED THE MAXIMUM STARING TIME REQUIREMENTS FOR THIS SYSTEM.
9. THE PUMP START MUST BE SEALED IN (LATCHED) SO THAT LOSS OF THE ACTUATION SIGNAL WILL NOT CAUSE THE PUMP TO STOP.
10. SYSTEM PREFIX IS 'FW' UNLESS OTHERWISE NOTED.
11. TRAIN B CONTROLS ARE SHOWN AS----------
12. MANUAL CLOSE OVERRIDES AUTOMATIC OPEN SIGNAL. MANUAL CLOSE IS ALARMED IN THE CONTROL ROOM.

REFERENCE DRAWINGS:

506480 (FW)
506497 (FW)
506499 (FW)
506555 (MS)
506721 (SB)
FP 70327

NUCLEAR SAFETY RELATED

REV	DATE	DSGN	DRWN	CHKD	CE	LDE	DESCRIPTION
15	5/5/99	—	JWB	JWB	JWB	JWB	INCORP MMOD 99-539 DCN-01
14	4/16/99	—	MRJ	JWB	ARB	CM	INCORP MMOD 99-539 DCN-00
13	6/20/97	—	MRJ	MRB	JPS	CM	INCORP DCR 97-004 DCN-12
12	10/10/95	—	MRJ	JWB	JPS	BAW	INCORP MMOD 94-566 CA-0

North Atlantic Energy Service Corporation

SEABROOK STATION

EMERGENCY & START-UP FEEDWATER PUMPS
Ⓦ FUNCTIONAL DIAGRAM

1-NHY-509055 REV 15

1-NHY-509056 REV 13

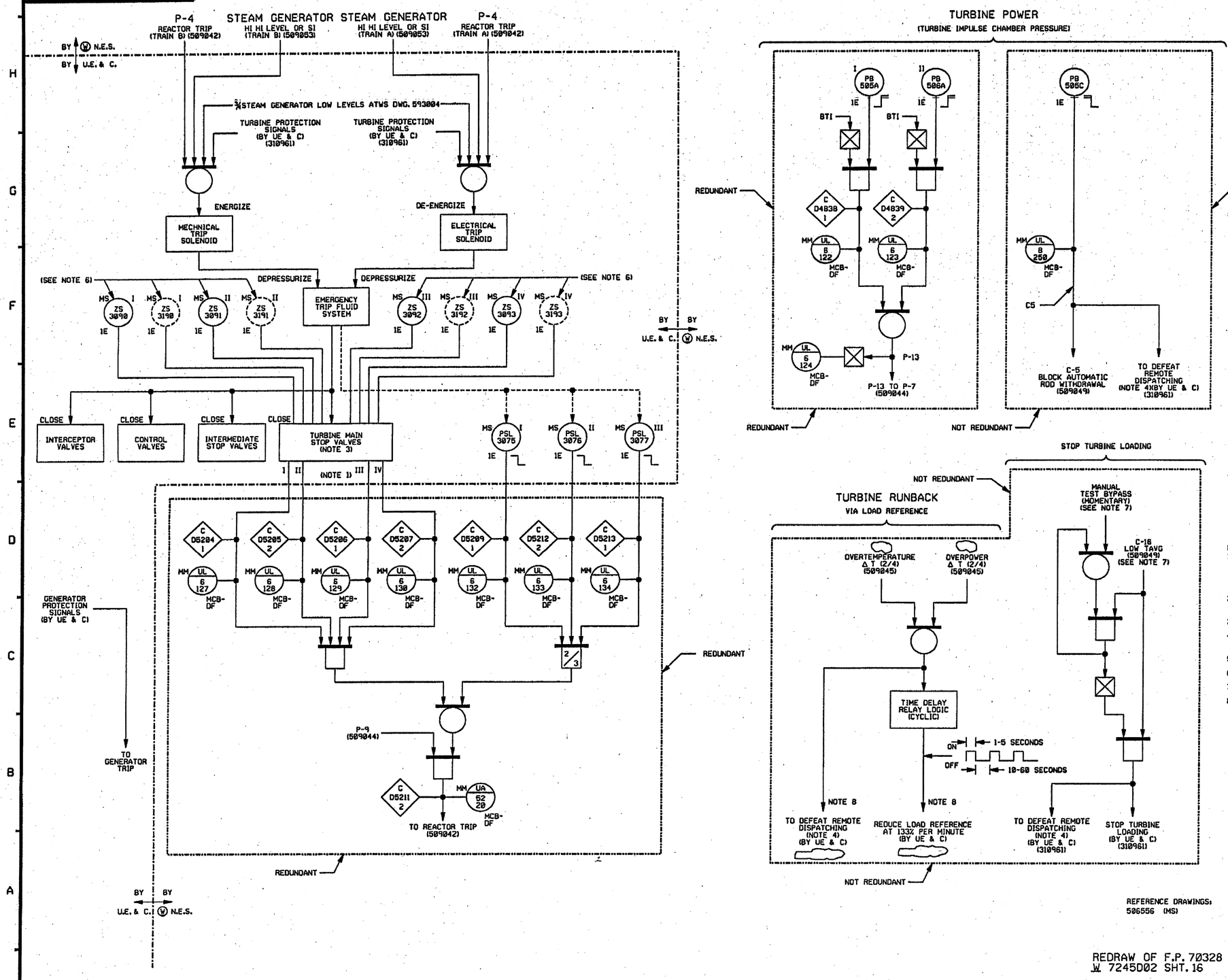

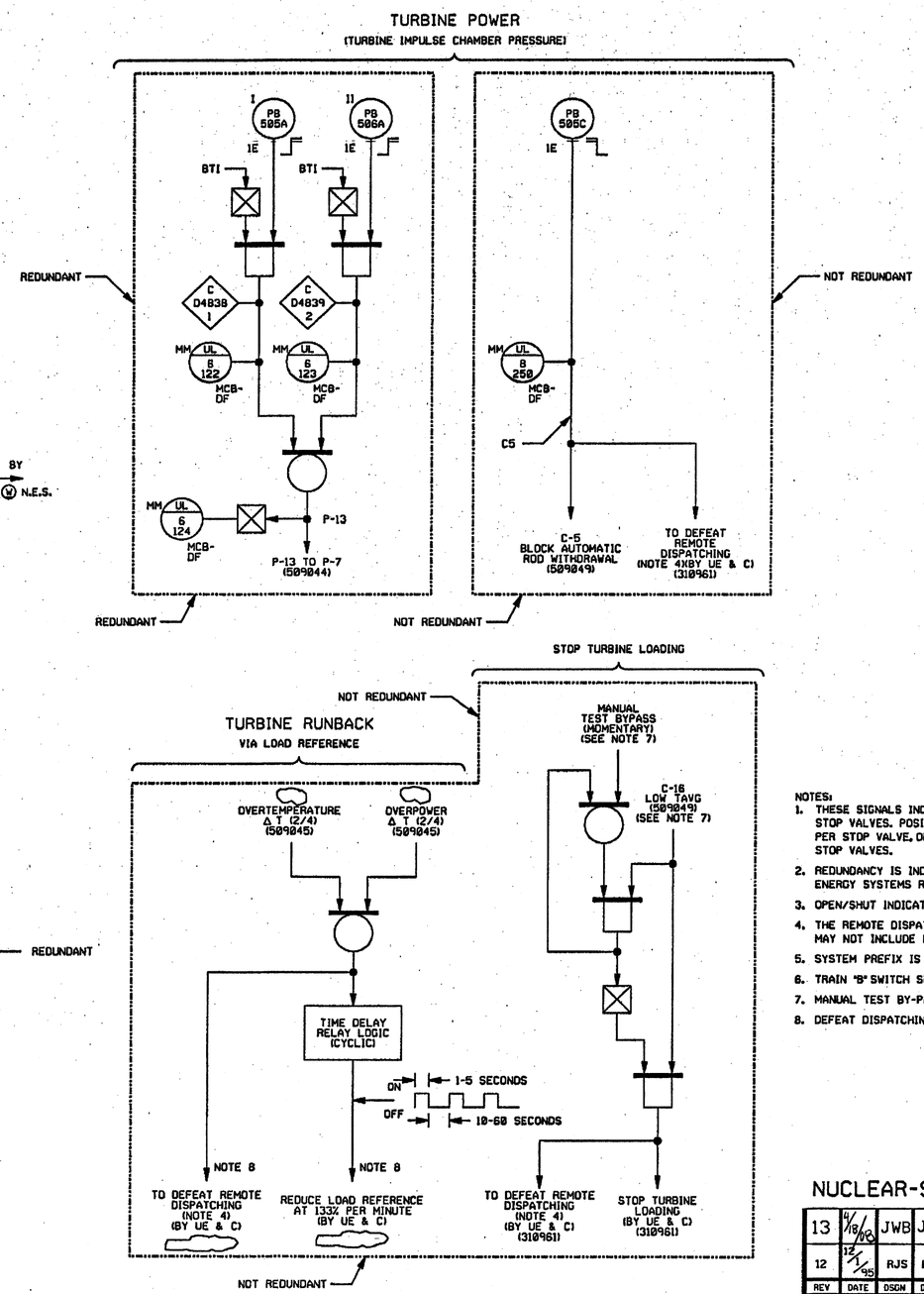

NOTES:

1. THESE SIGNALS INDICATE THE CLOSING (LESS THAN FULL OPEN) OF THE STOP VALVES. POSITION DETECTION IS ACCOMPLISHED BY TWO CONTACTS PER STOP VALVE, ONE FOR EACH TRAIN. THE LOGIC SHOWN IS FOR FOUR STOP VALVES.
2. REDUNDANCY IS INDICATED IN REGARDS TO WESTINGHOUSE NUCLEAR ENERGY SYSTEMS REQUIREMENTS ONLY.
3. OPEN/SHUT INDICATION IN CONTROL ROOM FOR EACH STOP VALVE.
4. THE REMOTE DISPATCHING IS TYPICAL. ACTUAL IMPLEMENTATION MAY NOT INCLUDE REMOTE DISPATCHING.
5. SYSTEM PREFIX IS "FW" UNLESS OTHERWISE NOTED.
6. TRAIN "B" SWITCH SHOWN AS.
7. MANUAL TEST BY-PASS SWITCH IS NOT INSTALLED.
8. DEFEAT DISPATCHING AND LOAD REDUCTION NOT USED. (REF: DCR 92-0033)

REFERENCE DRAWINGS: 506556 (MS)

REDRAW OF F.P. 70328
W 7245D02 SHT. 16

NUCLEAR-SAFETY-RELATED

REV	DATE	DSGN	DRWN	CHKD	CE	LDE	DESCRIPTION
13	4/18/96	JWB	JWB	TJM	JRS	RCS	INCORP 07MMOD500 DCN00
12	12/1/95	RJS	RJS	MRJ/JWB	WNF	CM	REDRAWN: INCORP. DCR 94-0002, CA-8 EDITORAL CHANGES

FPL Energy Seabrook Station

FW- TURBINE TRIP/RUN BACK W FUNCTIONAL DIAGRAMS

1-NHY-509056 REV 13