FERMI 2 NUCLEAR POWER PLANT

DETROIT EDISON COMPANY

OPERATING LICENSE NO. NPF - 43

Fermi 2 - 2008 Annual
Radioactive Effluent Release Report

for the period of
January 1, 2008 through December 31, 2008

Prepared by:

Fermi 2
Radiological Engineering

Table of Contents *Page*

Executive Summary ***4***

Introduction ***5***
Noble Gases *5*
Iodines and Particulates *5*
Tritium *6*
Plant Effluent Monitoring *6*
Exposure Pathways to People *7*
Dose Assessment *8*

Radioactive Effluent Monitoring Results ***9***

Summary of Radioactive Waste Shipments ***12***

Additional Required Information ***13***
Appendices *13*
ODCM Monitors Out of Service *13*
Outside Temporary Tanks *13*
Meteorological Tables *13*
Major Changes to Radioactive Waste Systems *14*

Appendix A: Effluent and Radwaste Data ***15***
Regulatory Limits for Radioactive Effluents *16*
Gaseous Effluents *16*
Liquid Effluents *17*
Measurements and Approximations of Total Activity in Radioactive Effluents *18*
Gaseous Effluents *18*
Fission and Activation Gases *18*
Radioiodines *18*
Particulates *19*
Tritium *19*
Gross Alpha *20*
Liquid Effluents *20*
Statistical Measurement Uncertainties *20*
Gaseous Release by Individual Nuclide *20*
Particulate Radionuclides (Curies) *21*
Noble Gases (Curies) *21*
Radioiodines (Curies) *22*
Shipments of Radwaste *22*
Spent resins, sludges, etc. *22*
Dry compressible waste, contaminated equipment, etc. *24*
Irradiated components, control rods, etc. *24*
Other *26*

Appendix B: Groundwater Monitoring Program Data and Analysis 27

Appendix C: Offsite Dose Calculation Manual for 2008 Revisions 38

List of Tables *Page*

Table 1	*Fission and Activation Gases (Noble Gases) Summary*	*9*
Table 2	*Radioiodines Summary*	*10*
Table 3	*Particulates Summary*	*10*
Table 4	*Tritium Summary*	*10*
Table 5	*2008 Gaseous Effluent Dose to Receptor with Highest Single Organ Dose*	*11*
Table 6	*Solid Waste Received at Burial Sites*	*12*
Table 7	*Solid Waste Shipments*	*12*

Executive Summary

This report is published to provide information regarding radioactive effluent monitoring at the Fermi 2 Nuclear Power Plant. The 2008 Annual Radioactive Effluent Release Report covers the period from January 1, 2008 through December 31, 2008.

The Radioactive Effluent Release Report is produced annually, as required by the Nuclear Regulatory Commission, to present detailed results of extensive monitoring of plant releases and offsite dose resulting from these releases. The data presented indicate that the operation of Fermi 2 results in offsite radiation exposures which are well below the applicable allowable levels set by the Nuclear Regulatory Commission (NRC) and the Environmental Protection Agency (EPA).

There were no releases of liquid radioactive effluents from Fermi 2 in 2008. In fact, there has not been a liquid radioactive discharge from Fermi 2 since 1994.

The highest potential single organ dose to a person living offsite due to iodines, particulates, and tritium released from the plant was calculated to be 0.125 mrem, which is 0.8% of the applicable limit found in 10 CFR 50, Appendix I.

Also during 2008, no direct radiation dose to members of the public beyond the site boundary was attributed to the operation of Fermi 2, based on analysis of readings of thermoluminescent dosimeters (TLD) placed at various locations near the Fermi site. The offsite dose due to effluents is an extremely small fraction of the 40 CFR 190 limits. Therefore, the combined direct radiation and effluent dose due to Fermi 2 was in compliance with 40 CFR 190 in 2008.

This report also contains a supplement describing the new Fermi Integrated Ground Water Protection Program. This program was established as part of the site's commitment to compliance with an industry-wide ground water protection initiative. The supplement also contains the results of quarterly ground water sampling, from approximately 40 monitor wells around Fermi 2, that has been performed since the fall of 2007. Some of these monitor wells, located within the protected area to the east and south of Fermi 2, have yielded sporadic and variable trace quantities of tritium that have been attributed to the recapture of tritium in precipitation from the plant's gaseous effluent.

Additional required sections of this report include descriptions of effluent monitors which were out of service for more than 30 days in 2008, revisions to the Offsite Dose Calculation Manual, radioactivity contained in radwaste shipments to points offsite, and a description of a new radwaste processing system.

Introduction

During the normal operation of a nuclear power plant, most of the fission products are retained within the fuel and fuel cladding. However, small amounts of radioactive fission products and trace amounts of the component and structure surfaces which have been activated are present in the primary coolant water. The four types of radioactive material released are noble gases, iodine, particulates, and tritium.

Noble Gases

Some of the fission products released in airborne effluents are radioactive isotopes of noble gases, such as xenon and krypton. These noble gases are released continuously at low levels while the reactor is operating, and releases may be increased when the reactor is depressurized or when there are leaks in the fuel cladding. Noble gas releases to the environment are reduced by plant systems which delay release of these gases from the plant, which allows a portion of the noble gas activity to decay within plant systems after it is released from the fuel.

Noble gases are biologically and chemically nonreactive. They do not concentrate in humans or other organisms. They contribute to human radiation dose by being an external source of radiation exposure to the body. They are readily dispersed in the atmosphere.

Iodines and Particulates

Fermi 2 is required to calculate offsite dose due to releases of iodine-131 and iodine-133, which are radioisotopes of iodine with half lives of 8 days and 1 day, respectively, and particulates with half-lives greater than 8 days in gaseous and liquid effluents, and tritium. The principal radioactive particulates released are fission products (e.g., yttrium-91m and barium-139) and activation products (e.g., cobalt-58 and cobalt-60). Annual releases of these radionuclides are small. Factors such as their high chemical reactivity and solubility in water, combined with the high efficiency of gaseous and liquid processing and radwaste systems, minimize their discharge.

The main contribution of radioactive iodine to human radiation dose is to the thyroid gland, where the body concentrates iodine. This exposure results from inhalation or ingestion of these iodines. Radioactive cesiums and cobalts, when ingested or inhaled, contribute to radiation exposure of tissues such as the muscle, liver, and intestines. These iodines and particulates are also a source of external radiation exposure if deposited on the ground.

Tritium

Tritium, a radioactive isotope of hydrogen, is the predominant radionuclide in radioactive liquid effluents. Fermi 2 has not conducted liquid radiological waste discharges since 1994. It is also the predominant radionuclide in gaseous effluents, and is detected at Fermi 2 in ventilation exhaust samples. Plant personnel are also alert for evidence of unmonitored tritium releases, but no such releases have been detected. Tritium is produced in the reactor coolant as a result of neutron interaction with deuterium (also a hydrogen isotope) present in the water, and it is also a fission product.

Plant Effluent Monitoring

Effluents are strictly monitored to ensure that radioactivity released to the environment is as low as reasonably achievable and does not exceed regulatory limits. Effluent control includes the operation of monitoring systems, in-plant and environmental sampling and analyses programs, quality assurance programs for effluent and environmental programs, and procedures covering all aspects of effluent and environmental monitoring.

The radioactive waste treatment systems at Fermi 2 are designed to collect, process, and/or delay the release of liquid and gaseous wastes which contain radioactivity. For example, the 2.0 and 2.2 minute holdup pipes delay the release of radioactive gases so that radioactive decay can occur prior to release. The offgas system provides additional delay for such gases.

Radioactivity monitoring systems are used to ensure that all releases are below regulatory limits. These instruments provide a continuous indication of the radioactivity present at the release points. Each instrument is equipped with alarms and indicators in the control room. The alarm setpoints are low enough to ensure that applicable limits will not be exceeded. In some cases, these alarms restrict the release. For example, if the liquid radwaste effluent monitor alarms, a release in progress is automatically stopped. Also, several alarms cause building ventilation systems to be shut down and/or gaseous releases to be diverted to the standby gas treatment system.

All wastes are evaluated to identify the specific concentrations of radionuclides being released. Sampling and analysis provide a more sensitive and precise method of determining effluent composition than monitoring instruments.

A meteorological tower is located on the Fermi 2 site. It is linked to computers which record the meteorological data. This data is used in calculating dispersion and deposition factors, which are essentially dilution factors between plant release points and points offsite. Coupled with the effluent release data, these factors are used to calculate dose to the public.

Beyond the plant, devices maintained in conjunction with the Radiological Environmental Monitoring Program constantly sample the air in the surrounding environment. Frequent samples of other environmental media, such as water and vegetation, are also taken to determine if buildup of deposited radioactive material has occurred in the area.

Exposure Pathways to People

Radiological exposure pathways define the methods by which people may become exposed to radioactive material. The major pathways of concern are those which could cause the highest calculated radiation dose. These projected pathways are determined from the type and amount of radioactive material released, the environmental transport mechanism, and the use of the environment. The environmental transport mechanism includes consideration of physical factors, such as the hydrological and meteorological characteristics of the area.

An important factor in evaluating the exposure pathways is the use of the environment. This is evaluated in the annual Land Use Census. Many factors are considered, such as the locations of homes, gardens, and milk or meat animals in the area.

The release of radioactive gaseous effluents involves pathways such as external whole body exposure, deposition of radioactive material on plants, deposition on soil, inhalation and ingestion by animals raised for human consumption, and inhalation by humans. The release of radioactive material in liquid effluents involves pathways such as drinking water and fish consumption.

Although radionuclides can reach humans by many different pathways, some result in greater dose than others. The most significant pathway is the exposure pathway which will provide the greatest dose to a population, or to a specific individual. Identification of the most significant pathway depends on the radionuclides involved, the age and diet of the individual, and the location of the individual's residence. The doses calculated may be delivered to the whole body or to a specific organ. The organ receiving the greatest fraction of the dose is important in determining compliance with dose limits.

Dose Assessment

Dose is energy deposited by radiation in an exposed individual. Whole body exposure to radiation involves the exposure of all organs. Most exposures due to external sources of radiation are of this type. Both non-radioactive and radioactive elements can enter the body through inhalation or ingestion. When they do, they are usually not distributed evenly. For example, iodine concentrates in the thyroid gland, cesium collects in muscle and liver tissue, and strontium collects in bone tissue.

The total dose to organs from a given radionuclide depends on the amount of radioactive material present in the organ and the amount of time that the radionuclide remains in the organ. Some radionuclides remain for very short times due to their rapid radioactive decay and/or elimination rate from the body, while other radionuclides may remain in the body for longer periods of time. Also the form of the radionuclide (soluble vs. insoluble) and the method of uptake also influence residence times in the body.

The dose to the general public in the area surrounding Fermi 2 is calculated for periods of gaseous release and for each liquid release. The dose due to radioactive material released in gaseous effluents is calculated using factors such as the amount of radioactive material released, the concentration beyond the site boundary, the locations of exposure pathways (cow milk, goat milk, vegetable gardens and residences), and usage factors (inhalation and food consumption). The dose due to radioactive material released in liquid effluents is calculated using factors such as the total volume of liquid, the total volume of dilution water, near field dilution, and usage factors (water and fish consumption). These calculations produce a conservative estimation of the dose.

Radioactive Effluent Monitoring Results

This section summarizes the results of effluent monitoring and offsite dose calculation for the year 2008. Calculated offsite doses are compared with Nuclear Regulatory Commission limits, and these limits are summarized in Appendix A. Appendix A also contains a detailed discussion of the methods used to determine quantities of radioactivity released in effluents, the types of solid radwaste, as well as tables of individual radionuclides released in effluents and shipped as solid radwaste.

There were no releases of liquid radioactive effluents from Fermi 2 in 2008. In fact, there has not been a liquid radioactive discharge from Fermi 2 since 1994. The 2008 gaseous effluent releases are summarized in the following tables. There were no abnormal releases of radioactive material, i.e., releases not performed in accordance with the Fermi 2 license and implementing procedures, in 2008.

The data in the following tables represent continuous and batch releases. In 2008, there was one containment purge in which radioactivity was detected. The total time for this purge was 376 minutes.

Note that some values in the following summary tables are preceded by the "less than" symbol. For gross alpha radioactivity releases, the "less than" value is in units of microcuries per cubic centimeter (μCi/cc) and represents the LLD value for a single sample.

Table 1 - Fission and Activation Gases (Noble Gases) Summary

	Quarter 1	Quarter 2	Quarter 3	Quarter 4
Release (curies)	4.58E+00	3.28E+00	3.75E+00	3.75E+00
Average Release Rate for Period (μCi/sec)	5.83E-01	4.17E-01	4.72E-01	4.69E-01

Table 2 - Radioiodines Summary

	Quarter 1	Quarter 2	Quarter 3	Quarter 4
Total I-131 (curies)	9.04E-04	1.31E-03	9.05E-04	7.85E-04
Average Release Rate for Period (μCi/sec)	1.15E-04	1.67E-04	1.15E-04	9.98E-05

Table 3 - Particulates Summary

	Quarter 1	Quarter 2	Quarter 3	Quarter 4
Particulates with half lives > 8 days (curies)	7.00E-05	1.05E-04	1.30E-04	1.40E-04
Average Release Rate for Period (μCi/sec)	8.90E-06	1.34E-05	1.65E-05	1.78E-05
Gross Alpha Radioactivity (μCi/cc)	<5.6E-15	<5.6E-15	<5.6E-15	<5.6E-15

Table 4 - Tritium Summary

	Quarter 1	Quarter 2	Quarter 3	Quarter 4
Total Release (curies)	2.29E+01	2.48E+01	1.63E+01	1.51E+01
Average Release Rate for Period (μCi/sec)	2.91E+00	3.15E+00	2.07E+00	1.92E+00

The offsite dose impact of the above releases was evaluated by calculating organ doses to the most highly exposed individual living near the plant due to I-131, I-133, tritium, and particulates with half lives greater than 8 days. This exposure is assumed to be occurring via the pathways of inhalation, vegetation ingestion, and direct radiation from material deposited on the ground. The results of this calculation are shown in the following table:

Table 5

Organ	2008 Gaseous Effluent Dose to Receptor with Highest Single Organ Dose
Bone	5.00E-03 mrem
Liver	1.05E-02 mrem
Thyroid	1.25E-01 mrem
Kidney	1.07E-02 mrem
Lung	1.01E-02 mrem
GI-LLI	1.03E-02 mrem
Total body	1.04E-02 mrem

The highest single organ dose is 1.25E-01 mrem to the thyroid. This is 0.8% of the federal limit of 15 mrem specified in 10 CFR 50, Appendix I.

Another dose calculation normally performed on the above release data is that for gamma and beta air dose at the site boundary due to noble gases. In 2008, gamma air dose was 4.54E-03 mrad, 0.05% of the 10 mrad annual limit; beta air dose in 2008 was 2.16E-03 mrad, 0.01% of the 20 mrad annual limit.

Title 40, Part 190 of the Code of Federal Regulations requires that dose to an individual in the unrestricted area from the uranium fuel cycle, including direct radiation dose, be limited to 25 mrem/year to the total body and 75 mrem/year to the thyroid. During 2008, there was no direct radiation dose attributed to the operation of Fermi 2 beyond the site boundary, based on analysis of offsite TLD readings. Also, as shown above, offsite dose due to effluents is an extremely small fraction of the 40 CFR 190 limits. Therefore, Fermi 2 was in compliance with 40 CFR 190 in 2008.

Potential dose to visitors at Fermi 2 due to all radioactive effluents, including noble gases, was also calculated. The Offsite Dose Calculation Manual (ODCM) considers persons visiting the Fermi 2 Visitors Center (4 hours/year), and persons ice fishing on Lake Erie near the plant (240 hours/year), to be visitors. Using ODCM assumptions about these categories of visitors, the maximum potential dose to a visitor to Fermi 2 in 2008 was 0.0048 mrem to the maximally exposed organ (thyroid) and 0.0021 mrem to the total body.

Also, the dose to the entire population within a fifty mile radius of Fermi 2 (about 6 million people) was estimated to be less than one person-rem for 2008. This dose is insignificant compared to the background radiation dose to this population of approximately 1.8 million person-rem (based on an annual average individual background dose of 300 mrem).

Summary of Radioactive Waste Shipments

The radioactivity and volume of Fermi 2 solid waste received at the Barnwell, SC, burial facility, or at the Clive, UT, facility in 2008 is summarized in the following table:

Table 6 - Solid Waste Received At Burial Sites

Type of waste	Unit	12 month period	Est. total activity error, %
Spent resins, sludges, etc.	m^3 curies	1.08E+02 9.82E+01	± 25
Dry compressible waste, contaminated equipment, etc.	m^3 curies	5.29E+01 7.59E-01	± 25
Irradiated components, control rods, etc.	m^3 curies	1.01E+01 2.70E+04	± 25
Other	m^3 curies	0 0	NA

Radioactive solid waste shipments from Fermi 2 in 2008 (to either disposal or to intermediate processors) are summarized in the following table:

Table 7 - Solid Waste Shipments

Type of shipment/ solidification process	Number of shipments	Mode of transportation	Destination
Spent resin, sludges, etc.	17	tractor trailer with cask, and rail	Chem Nuclear, Barnwell, SC EnergySolutions, Oak Ridge, TN EnergySolutions, Clive, UT
Dry compressible waste, contaminated equipment, etc.	14	tractor trailer	EnergySolutions, Oak Ridge, TN Studsvik, Memphis, TN
Irradiated hardware	6	tractor trailer with cask	Chem Nuclear, Barnwell, SC
Used oil	0	NA	NA
Mixed waste	0	NA	NA

Additional Required Information

Appendices

The contents of Appendix A, Effluent and Radwaste Data, are described on page 9. The Fermi 2 Integrated Groundwater Protection Program was officially started in the fourth quarter of 2007. Appendix B contains a description of this program, sampling data, and a discussion of sampling results. The ODCM was revised once in 2008. A complete copy of the current revision is included as Appendix C.

ODCM Monitors Out of Service

The Offgas Radiation Monitor, Division 2, was out of service from October 2007 through August 2008. This extended condition was due the inability to calibrate the monitor which was in turn due to the unavailability of spare parts. This monitor was declared out of service again in October 2008 due to not exhibiting expected downscale conditions during functional testing. This condition was resolved and this monitor was returned to service in November 2008. Division 1 remained in service during 2008 except for short periods. The ODCM revision referred to above allows continued plant operation without the offgas monitors in service, provided that daily offgas sampling and analysis is performed.

The Liquid Radwaste Effluent Monitor was out of service between May 2007 and July 2008. This extended condition was due to a required preventive maintenance activity not being able to be performed due the unavailability of spare parts and the lack of an appropriate radioactive test source. No radioactive liquid releases were performed during this period.

Outside Temporary Tanks

No outside temporary tank exceeded the 10 curie content limit (excluding tritium and dissolved or entrained noble gases) in 2008.

Meteorological Tables

Meteorological joint frequency tables for 2008 were generated and reviewed, but are not included in this report. Instead, in accordance with Section 5.9.1.8 of the Fermi 2 Offsite Dose Calculation Manual (ODCM), a summary file of required meteorological data for 2008 is retained on site and is available upon request. Changes in meteorological tables from previous years were not substantial.

Major Changes to Radioactive Waste Systems

There was one major change to radioactive waste systems in 2008: a new sidestream liquid radwaste processing system was placed in service. This system replaces old unusable radwaste evaporators. It consists of two new radwaste evaporators (one low rad and one high rad) and a two train post treatment system consisting of carbon filters, ultraviolet reactors, and mixed bed demineralizers. The system is designed to eliminate accumulation of liquid in the onsite storage facility, and to process standby liquid control borated water, floor/mop water, chemical waste water, and sludge removed from reactor building sumps and the main condenser. The evaporation process has been demonstrated to produce a dried product with no free standing liquids, and the moisture evaporated is re-condensed and returned to plant systems.

A 10 CFR 50.59 screen was performed for implementation of the new sidestream system. While the liquid radwaste system accident analysis was affected, the dose rates associated with the tank rupture analysis were decreased. Other system changes did not affect design basis functions. It was concluded that the change did not adversely impact any UFSAR described design function, and thus a 10 CFR 50.59 evaluation was not required.

The new sidestream system will not add to liquid radwaste; the solid radwaste produced was anticipated to be produced by the old unusable evaporators, and would be produced by other processes if the evaporators are not used. A small amount of gaseous radwaste, primarily tritium, may be exhausted from the radwaste building during processing, but this amount is negligible compared to total routine releases, and it would also be released by other routes if the evaporators are not used. Thus dose to members of the public offsite is not affected by operation of the new evaporators. The annual dose to plant personnel from operating the new system is estimated to be less than 100 millirem; to date no personnel dose has been associated with operation of this system.

Criteria for the new side stream liquid processing system, which are mainly methods of verifying adequate dryness of the solid radwaste generated by the evaporation process, have been added to plant conduct manual MRP26, Process Control Program. This revision of the Process Control Program was reviewed by Radiation Protection personnel and was approved by the Onsite Review Organization and by the Plant Manager on 7/16/08.

Appendix A

Effluent and Radwaste Data

Regulatory Limits for Radioactive Effluents

The Nuclear Regulatory Commission (NRC) limits on liquid and gaseous effluents are incorporated into the Fermi 2 Offsite Dose Calculation Manual. These limits prescribe the maximum doses and dose rates due to radioactive effluents resulting from normal operation of Fermi 2. These limits are described in the following sections.

A. Gaseous Effluents

I. Dose rate due to radioactivity released in gaseous effluents to areas at and beyond the site boundary shall be limited to the following:

a) Noble gases

Less than or equal to 500 mrem/year to the total body.
Less than or equal to 3000 mrem/year to the skin.

b) Iodine-131, iodine-133, tritium, and for all radionuclides in particulate form with half lives greater than 8 days

Less than or equal to 1500 mrem/year to any organ.

II. Air dose due to noble gases to areas at and beyond the site boundary shall be limited to the following:

a) Less than or equal to 5 mrad for gamma radiation
Less than or equal to 10 mrad for beta radiation
- During any calendar quarter

b) Less than or equal to 10 mrad for gamma radiation
Less than or equal to 20 mrad for beta radiation
- During any calendar year

III. Dose to a member of the public from iodine-131, iodine-133, tritium, and all radionuclides in particulate form with half lives greater than 8 days in gaseous effluents released to areas at and beyond the site boundary shall be limited to the following:

a) Less than or equal to 7.5 mrem to any organ
- During any calendar quarter

b) Less than or equal to 15 mrem to any organ
- During any calendar year

Note: The calculated site boundary dose rates for Fermi 2 are based on identification of individual isotopes and on use of dose factors specific to each identified isotope or a highly conservative dose factor. Average energy values are not used in these calculations, and therefore need not be reported.

B. Liquid Effluents

I. The concentration of radioactive material released in liquid effluents to unrestricted areas shall be limited to ten times the concentrations specified in Title 10 of the Code of Federal Regulations (10 CFR) Part 20 (Standards for Protection Against Radiation), Appendix B, Table 2, Column 2 for radionuclides other than dissolved or entrained noble gases, as required by the Fermi 2 Offsite Dose Calculation Manual. For dissolved or entrained noble gases, the concentration shall be limited to 2E-4 (.0002) microcuries/ml total activity. This limit is based on the Xe-135 air submersion dose limit converted to an equivalent concentration in water as discussed in the International Commission on Radiological Protection (ICRP) Publication 2.

II. The dose or dose commitment to a member of the public from radioactive materials in liquid effluents released to unrestricted areas shall be limited to the following:

a) Less than or equal to 1.5 mrem to the total body
Less than or equal to 5 mrem to any organ
- During any calendar quarter

b) Less than or equal to 3 mrem to the total body
Less than or equal to 10 mrem to any organ
- During any calendar year

Measurements and Approximations of Total Activity in Radioactive Effluents

As required by NRC Regulatory Guide 1.21, this section describes the methods used to measure the total radioactivity in effluent releases and to estimate the overall errors associated with these measurements. The effluent monitoring systems are described in Chapter 11.4 of the Fermi 2 Updated Final Safety Analysis Report (UFSAR).

A. Gaseous Effluents

I. Fission and Activation Gases

Samples are obtained from each of the six plant radiation monitors which continuously monitor the five ventilation exhaust points. The fission and activation gases are quantified by gamma spectroscopy analysis of periodic samples.

The summary values reported are the sums of all fission and activation gases quantified at all monitored release points.

II. Radioiodines

Samples are obtained from each of the six plant radiation monitors which continuously monitor the five ventilation exhaust points. The radioiodines are entrained on charcoal and then quantified by gamma spectroscopy analysis. For each sample, the duration of sampling and continuous flow rate through the charcoal are used in determining the concentration of radioiodines. From the flow rate of the ventilation system, a rate of release can be determined.

The summary values reported are the sums of all radioiodines quantified at all continuously monitored release points.

III. Particulates

Samples are obtained from each of the six plant effluent radiation monitors which continuously monitor the five ventilation exhaust points. The particulates are collected on a filter and then quantified by gamma spectroscopy analysis.

For each sample, the duration of sampling and continuous flow rate through the filter are used in determining the concentration of particulates. From the flow rate of the ventilation system, a rate of release can be determined.

Quarterly, the filters from each ventilation release point are composited and then radiochemically separated and analyzed for strontium (Sr)-89/90 using various analytical methods.

The summary values reported are the sums of all particulates quantified at all monitored release points.

IV. Tritium

Samples are obtained from each of the six plant effluent radiation monitors which continuously monitor the five ventilation exhaust points. The sample is passed through a bottle containing water and the tritium is "washed" out to the collecting water. Portions of the collecting water are analyzed for tritium using liquid scintillation counting techniques. For each sample, the duration of sample and sample flow rate is used to determine the concentration. From the flow rate of the ventilation system, a release rate can be determined.

The summary values reported are the sums of all tritium quantified at all monitored release points.

V. Gross Alpha

The gaseous particulate filters from the six plant effluent radiation monitors are stored for one week to allow for decay of naturally occurring alpha emitters. These filters are then analyzed for gross alpha radioactivity by gas proportional counting, and any such radioactivity found is assumed to be plant related. The quantity of alpha emitters released can then be determined from sample flow rate, sample duration, and stack flow rate.

The summary values reported are the sums of all alpha emitters quantified at all monitored release points.

B. Liquid Effluents

The liquid radwaste processing system and the liquid effluent monitoring system are described in the Fermi 2 UFSAR. Fermi 2 released no radioactive liquid effluents in 2008.

C. Statistical Measurement Uncertainties

The statistical uncertainty of the measurements in this section has been calculated and summarized in the following table:

Measurement Type	Sample Type	One Sigma Uncertainty
Fission and Activation Gases	Gaseous	30%
Radioiodines	Gaseous	17%
Particulates	Gaseous	16%
Tritium	Gaseous	25%
Gross Alpha	Gaseous	16%

Gaseous Releases by Individual Nuclide

Values in the following tables which are preceded by the "less than" symbol represent the lower limit of detection (LLD) in units of microcuries per cubic centimeter (μCi/cc) for individual samples, and indicate that the nuclide in question was not detected in gaseous effluent samples in the indicated quarter of 2008. For quantities of gross alpha radioactivity and tritium in gaseous effluents, see Tables 3 and 4 on page 10 of this report.

A. Particulate Radionuclides (Curies)

Nuclide	Quarter 1	Quarter 2	Quarter 3	Quarter 4
Mn-54	2.71E-06	1.01E-06	<3.0E-13	1.44E-05
Co-58	<1.1E-13	<1.1E-13	<1.1E-13	1.45E-05
Co-60	4.00E-06	1.13E-05	2.55E-05	2.21E-05
Na-24	<2.7E-13	<2.7E-13	<2.7E-13	5.27E-04
Zn-69m	<5.7E-13	<5.7E-13	<5.7E-13	3.14E-04
Tc-99m	<6.4E-13	<6.4E-13	<6.4E-13	1.89E-04
Ba-139	8.47E-02	1.38E-01	1.05E-01	8.94E-02
La-140	6.57E-05	9.06E-05	1.10E-04	2.73E-05
Ba-140	1.83E-05	1.57E-05	2.28E-05	1.29E-05
Y-91m	8.09E-03	8.82E-03	1.18E-02	1.31E-02
Sr-91	<6.2E-12	1.99E-04	2.32E-04	8.33E-05
Rb-89	<1.1E-09	5.68E-03	1.35E-02	1.04E-02
Cs-138	5.47E-02	7.11E-02	3.85E-02	2.23E-02
As-76	4.33E-03	3.92E-03	3.79E-03	4.37E-03
Br-82	1.54E-05	5.75E-06	3.07E-05	<1.3E-13
Sr-89	4.50E-05	7.69E-05	8.17E-05	7.57E-05
Sr-90	<2.1E-14	<2.1E-14	<2.1E-14	<2.1E-14
Cs-134	<1.4E-13	<1.4E-13	<1.4E-13	<1.4E-13
Cs-137	<1.7E-13	<1.7E-13	<1.7E-13	<1.7E-13
Ce-141	<8.5E-14	<8.5E-14	<8.5E-14	<8.5E-14
Ce-143	<5.0E-13	<5.0E-13	<5.0E-13	<5.0E-13
Ce-144	<7.3E-13	<7.3E-13	<7.3E-13	<7.3E-13
Total	**1.52E-01**	**2.28E-01**	**1.73E-01**	**1.41E-01**

B. Noble Gases (Curies)

Nuclide	Quarter 1	Quarter 2	Quarter 3	Quarter 4
Ar-41	1.08E+00	1.75E-01	<4.1E-08	<4.1E-08
Kr-87	<1.9E-07	<1.9E-07	<1.9E-07	<1.9E-07
Kr-88	<1.3E-07	<1.3E-07	<1.3E-07	<1.3E-07
Kr-85m	2.58E-01	6.79E-02	<3.3E-08	<3.3E-08
Xe-133	<6.7E-08	<6.7E-08	<6.7E-08	<6.7E-08
Xe-133m	<2.2E-07	<2.2E-07	<2.2E-07	<2.2E-07
Xe-135	6.15E-02	1.82E-01	1.16E-01	<5.4E-09
Xe-135m	1.06E+00	8.10E-01	8.07E-01	1.01E+00
Xe-138	2.12E+00	2.05E+00	2.82E+00	2.72E+00
Total	**4.58E+00**	**3.28E+00**	**3.74E+00**	**3.73E+00**

C. Radioiodines (Curies)

Nuclide	Quarter 1	Quarter 2	Quarter 3	Quarter 4
I-131	9.04E-04	1.31E-03	9.05E-04	7.85E-04
I-132	1.14E-02	1.74E-02	1.13E-02	1.44E-02
I-133	7.89E-03	1.17E-02	8.12E-03	8.29E-03
I-134	9.30E-03	5.99E-03	1.13E-02	1.06E-02
I-135	7.64E-03	2.03E-02	8.85E-03	8.67E-03
Total	**3.71E-02**	**5.67E-02**	**4.05E-02**	**4.27E-02**

Shipments of Radwaste

Fermi 2 complies with the extensive federal regulations which govern radioactive waste shipments. Radioactive solid waste shipments from the Fermi 2 site consist of waste generated during water treatment, radioactive trash, irradiated components, etc. Shipment destinations are either licensed burial sites or intermediate processing facilities. Waste shipped to intermediate processing facilities is shipped directly from these facilities to licensed burial sites after processing. The following tables contain estimates of major nuclide composition, by class of waste, of Fermi 2 solid radwaste received at the Barnwell, SC, burial facility or at the Clive, UT, facility in 2008.

a. **Spent resins, sludges, etc.** All waste in this category in 2008 was Class A waste and consisted of spent resins and sludges. It was shipped in either High Integrity Containers or Polyethylene Liners, within shielded transportation casks, directly to the Barnwell, SC, or Clive, UT, burial facilities, or to an intermediate processor. Waste sent directly to a disposal facility was dewatered prior to shipment. All quantities were determined by measurement.

Spent resins, sludges, etc.

Isotope	Activity mCi	Percent
Ag-110m	1.31E+01	0.01%
Am-241	8.64E-04	0.00%
C-14	7.70E+01	0.08% LLD
Ce-144	1.92E+01	0.02%
Cm-242	7.14E-06	0.00%
Cm-243	3.04E-03	0.00%
Cm-244	2.88E-03	0.00%
Co-57	7.10E-01	0.00%
Co-58	1.71E+02	0.17%
Co-60	2.78E+04	28.36%
Cr-51	1.07E+01	0.01%
Cs-134	2.39E+01	0.02%
Cs-137	5.23E+02	0.53%
Fe-55	5.91E+04	60.20%
Fe-59	3.21E+01	0.03%
H-3	6.59E+02	0.67%
Hf-181	4.80E-01	0.00%
I-129	2.31E+00	0.00% LLD
Mn-54	7.76E+03	7.90%
Nb-95	3.80E-01	0.00%
Ni-63	1.05E+03	1.06%
Pu-238	1.56E-03	0.00%
Pu-239	1.30E-03	0.00%
Pu-240	1.30E-03	0.00%
Pu-241	2.21E-01	0.00%
Sb-124	4.32E+00	0.00%
Sr-89	2.75E+00	0.00%
Sr-90	8.68E-02	0.00%
Tc-99	5.78E+01	0.06% LLD
Zn-65	9.65E+02	0.98%
Total Activity	9.82E+04	100.00%
Volume Shipped (cuft)	3.83E+03	

b. **Dry compressible waste, contaminated equipment, etc**. Waste in this category in 2008 was shipped in strong tight containers, and was classified as dry active waste (DAW). All waste in this category was Class A waste. The DAW was compacted, and sent for direct disposal or incinerated by an intermediate processor. All quantities were determined by measurement.

Dry Active Waste

Isotope	Activity mCi	Percent
C-14	4.09E+01	5.39%
Co-58	2.94E+00	0.39%
Co-60	1.45E+02	19.12%
Cr-51	4.84E+00	0.64%
Fe-55	4.77E+02	62.86%
Fe-59	1.95E+00	0.26%
H-3	8.93E+01	11.77%
I-129	1.67E+00	0.22%
Mn-54	3.22E+01	4.24%
Tc-99	3.15E+01	4.14%
Zn-65	5.88E+00	0.77%
Total Activity	7.59E+02	100.00%
Volume Disposed (cuft)	1.87E+03	

c. **Irradiated components, control rods, etc.** Waste in this category in 2008 was Class B or Class C waste and consisted of irradiated hardware and high activity filters. It was shipped in metal liners, within shielded transportation casks, directly to the Barnwell, SC, burial facility. Some waste was encapsulated in concrete prior to disposal. All quantities were determined by measurement.

1. Class B - Irradiated Hardware and Filters

Isotope	Activity mCi	Percent
Ag-110m	1.46E-03	0.00%
Am-241	1.83E-02	0.00%
Am-243	9.34E-16	0.00%
C-14	7.76E-05	0.00%
Cm-242	5.61E-02	0.00%
Cm-243	8.30E-02	0.00%
Cm-244	7.17E-16	0.00%
Co-58	1.96E+03	1.75%
Co-60	4.61E+04	41.14%
Cr-51	1.34E-01	0.00%
Cs-137	6.15E+02	0.55%
Fe-55	3.58E+04	31.95%
Fe-59	2.80E-02	0.00%
H-3	3.54E+01	0.03%
I-129	8.86E-01	0.00%
Mn-54	1.23E+04	10.98%
Nb-94	1.8E-06	0.00%
Ni-59	4.30E-04	0.00%
Ni-63	2.60E+03	2.32%
Np-237	1.29E-09	0.00%
Pu-238	1.27E-01	0.00%
Pu-239	2.25E-02	0.00%
Pu-240	1.50E-08	0.00%
Pu-241	3.47E+00	0.00%
Sr-89	3.12E+01	0.03%
Sr-90	6.05E+00	0.01%
Tc-99	3.82E-06	0.00%
U-235	1.65E-06	0.00%
Zn-65	1.26E+04	11.24%
Total Activity	1.12E+05	100.00%
Volume Shipped (cuft)	1.26E+02	

2. Class C - Irradiated Hardware

Isotope	Activity mCi	Percent
Ag-110m	9.05E+00	0.00%
Am-241	1.51E-02	0.00%
Am-243	2.70E-04	0.00%
C-14	1.36E+03	0.01%
Ce-144	1.12E+02	0.00%
Cm-242	9.42E-02	0.00%
Cm-243	1.74E-02	0.00%
Cm-244	4.39E-02	0.00%
Co-58	3.57E+04	0.13%
Co-60	1.20E+07	44.81%
Cr-51	7.43E+03	0.03%
Cs-137	1.94E+02	0.00%
Fe-55	1.24E+07	46.21%
Fe-59	1.90E-04	0.00%
H-3	2.12E+03	0.01%
Hf-181	1.64E+05	0.61%
I-129	1.19E+00	0.00%
Mn-54	3.57E+05	1.33%
Nb-94	2.93E+01	0.00%
Ni-59	5.70E+03	0.02%
Ni-63	1.03E+06	3.85%
Np-237	1.84E-03	0.00%
Pu-238	1.91E+01	0.00%
Pu-239	1.82E-02	0.00%
Pu-240	1.53E-02	0.00%
Pu-241	2.49E+00	0.00%
Sr-89	8.54E-01	0.00%
Sr-90	2.15E+00	0.00%
Ta-182	8.05E+05	3.00%
Tc-99	1.38E+01	0.00%
U-235	1.06E-04	0.00%
Zn-65	6.57E+02	0.00%
Total Activity	2.69E+07	100.00%
Volume Shipped (cuft)	2.31E+02	

d. Other No waste in this category was shipped to a disposal site.

Appendix B

Groundwater Monitoring Program Data and Analysis

INTRODUCTION

In compliance with the voluntary Industry Ground Water Protection Program (IGWPP) initiative (Nuclear Energy Institute 07-07), the Fermi Energy Center began a review of the site's ground water monitoring program in the summer of 2006. A result of this review was that, in the vicinity of Fermi 2, additional monitor wells were installed to more accurately characterize ground-water flow adjacent to the power block. These wells are not only used to monitor ground-water flow in the shallow (surficial) and deep (bedrock) aquifers, but they also provide sample points, separate of the site's existing, long-term Radiological Environmental Monitoring Program (REMP) wells.

RESULTS

Deep Wells (Table 1)
Results from samples of ground water from the Fermi Energy Center deep wells were all non-detect for tritium since Fall of 2007, with the exception of a ground-water sample from monitor well EF2-07-009D taken in the Fall of 2008 (Sample event P-2008-G-Q4).

Investigation of the low-level positive indication of tritium in monitor well EF2-07-009D identified that the tubing used to sample the water at the bottom of the well had coiled up and was floating near the surface of the well. Because of this discovery, the posted result from the fourth quarter of 2008 is suspect. New sample tubing was installed adjacent to the well's screened interval and the following ground-water sample was non-detect for tritium.

During the fourth quarter 2008 sampling event, ground water from all the deep wells was sampled and analyzed by gamma spectroscopy at the contract laboratory. The samples were analyzed per Fermi Energy Center REMP criteria. All the results showed non-detect for station-related radioisotopes.

Shallow Wells (Table 2)
Since sampling of IGWPP wells commenced in the Fall of 2007, most shallow monitor wells have consistently yielded results indicating that tritium is not present at the detection limit. Shallow monitor wells, where trace levels of tritium have been detected, yielded sporadic and variable tritium activities that are all less than 1,950 pCi/L.

During the fourth quarter 2008 sampling event, ground water from all the shallow wells was sampled and analyzed by gamma spectroscopy at the contract laboratory. The samples were analyzed per Fermi Energy Center REMP criteria. All the result showed non-detect for plant-related radioisotopes.

DISCUSSION

This is the first annual review of results of ground-water sampling performed in compliance with the Fermi Energy Center IGWPP. Results of tritium analysis of ground water sampled since the Fall of 2007 have shown that most of the site's wells have never had a positive result for that radionuclide. The wells that have yielded water with positive results are generally located within the Protected Area to the east and south of the Fermi 2 power block.

Because the monitor wells that have yielded positive results for tritium are located to the east and south of the Fermi 2 production area, in sectors that are predominantly downwind from the Fermi 2 stacks, it is concluded that the presence of tritium in ground water in these wells is due to recapture. Recapture of tritium emitted from nuclear power plant stacks in precipitation is well documented and these emissions are continuously monitored and reported annually in this report.

Table 1: Deep Well Tritium Analysis Results 2007 – 2008.

MONITOR WELL	EVENT ID	QA TYPE	LAB ID	PARAMETER	PREFIX	VALUE	UNITS
EF2-07-001D	P-2007-G-Q4	NORMAL	FERMI	H-3	<	6.48E+02	PCI/L
EF2-07-001D	P-2008-G-Q1	NORMAL	FERMI	H-3	<	5.75E+02	PCI/L
EF2-07-001D	P-2008-G-Q2	NORMAL	AREVA	H-3	<	4.20E+02	PCI/L
EF2-07-001D	P-2008-G-Q3	NORMAL	AREVA	H-3	<	4.30E+02	PCI/L
EF2-07-003D	P-2007-G-Q4	NORMAL	FERMI	H-3	<	6.20E+02	PCI/L
EF2-07-003D	P-2008-G-Q1	NORMAL	FERMI	H-3	<	6.57E+02	PCI/L
EF2-07-003D	P-2008-G-Q2	NORMAL	AREVA	H-3	<	4.30E+02	PCI/L
EF2-07-003D	P-2008-G-Q3	NORMAL	AREVA	H-3	<	4.30E+02	PCI/L
EF2-07-003D	P-2008-G-Q4	NORMAL	AREVA	H-3	<	4.50E+02	PCI/L
EF2-07-004D	P-2007-G-Q4	NORMAL	FERMI	H-3	<	6.20E+02	PCI/L
EF2-07-004D	P-2008-G-Q1	NORMAL	FERMI	H-3	<	6.57E+02	PCI/L
EF2-07-004D	P-2008-G-Q1	DUPLICATE	FERMI	H-3	<	6.57E+02	PCI/L
EF2-07-004D	P-2008-G-Q2	NORMAL	AREVA	H-3	<	4.20E+02	PCI/L
EF2-07-004D	P-2008-G-Q3	NORMAL	AREVA	H-3	<	4.40E+02	PCI/L
EF2-07-004D	P-2008-G-Q4	NORMAL	AREVA	H-3	<	4.30E+02	PCI/L
EF2-07-006D	P-2007-G-Q4	NORMAL	FERMI	H-3	<	5.65E+02	PCI/L
EF2-07-006D	P-2008-G-Q1	NORMAL	FERMI	H-3	<	6.57E+02	PCI/L
EF2-07-006D	P-2008-G-Q2	NORMAL	AREVA	H-3	<	4.30E+02	PCI/L
EF2-07-006D	P-2008-G-Q3	NORMAL	AREVA	H-3	<	4.30E+02	PCI/L
EF2-07-006D	P-2008-G-Q4	NORMAL	AREVA	H-3	<	4.50E+02	PCI/L
EF2-07-008D	P-2007-G-Q4	NORMAL	FERMI	H-3	<	5.95E+02	PCI/L
EF2-07-008D	P-2008-G-Q1	NORMAL	FERMI	H-3	<	6.57E+02	PCI/L
EF2-07-008D	P-2008-G-Q2	NORMAL	AREVA	H-3	<	4.10E+02	PCI/L
EF2-07-008D	P-2008-G-Q3	NORMAL	AREVA	H-3	<	4.40E+02	PCI/L
EF2-07-008D	P-2008-G-Q4	NORMAL	AREVA	H-3	<	4.50E+02	PCI/L
EF2-07-009D	P-2007-G-Q4	NORMAL	FERMI	H-3	<	6.20E+02	PCI/L

EF2-07-009D	P-2008-G-Q1	NORMAL	FERMI	H-3	<	5.75E+02	PCI/L
EF2-07-009D	P-2008-G-Q2	NORMAL	AREVA	H-3	<	3.40E+02	PCI/L
EF2-07-009D	P-2008-G-Q3	NORMAL	AREVA	H-3	<	4.30E+02	PCI/L
EF2-07-009D	P-2008-G-Q4	NORMAL	AREVA	H-3		5.74E+02	PCI/L
EF2-07-015D	P-2007-G-Q4	NORMAL	FERMI	H-3	<	6.20E+02	PCI/L
EF2-07-015D	P-2008-G-Q1	NORMAL	FERMI	H-3	<	5.98E+02	PCI/L
EF2-07-015D	P-2008-G-Q2	NORMAL	AREVA	H-3	<	4.10E+02	PCI/L
EF2-07-015D	P-2008-G-Q3	NORMAL	AREVA	H-3	<	4.40E+02	PCI/L
EF2-07-015D	P-2008-G-Q3	DUPLICATE	AREVA	H-3	<	4.40E+02	PCI/L
EF2-07-015D	P-2008-G-Q4	NORMAL	AREVA	H-3	<	4.30E+02	PCI/L
EF2-07-020D	P-2007-G-Q4	NORMAL	FERMI	H-3	<	6.20E+02	PCI/L
EF2-07-020D	P-2007-G-Q4	DUPLICATE	FERMI	H-3	<	6.20E+02	PCI/L
EF2-07-020D	P-2008-G-Q1	NORMAL	FERMI	H-3	<	5.98E+02	PCI/L
EF2-07-020D	P-2008-G-Q2	NORMAL	AREVA	H-3	<	4.10E+02	PCI/L
EF2-07-020D	P-2008-G-Q3	NORMAL	AREVA	H-3	<	4.40E+02	PCI/L
EF2-07-020D	P-2008-G-Q4	NORMAL	AREVA	H-3	<	4.30E+02	PCI/L
EF2-07-029D	P-2007-G-Q4	NORMAL	FERMI	H-3	<	6.20E+02	PCI/L
EF2-07-029D	P-2008-G-Q1	NORMAL	FERMI	H-3	<	6.57E+02	PCI/L
EF2-07-029D	P-2008-G-Q2	NORMAL	AREVA	H-3	<	4.30E+02	PCI/L
EF2-07-029D	P-2008-G-Q3	NORMAL	AREVA	H-3	<	4.30E+02	PCI/L
EF2-07-029D	P-2008-G-Q4	NORMAL	AREVA	H-3	<	4.30E+02	PCI/L

Table 2: Shallow Well Tritium Analysis Results 2007 – 2008.

MONITOR WELL	EVENT ID	QA TYPE	LAB ID	PARAMETER	PR	VALUE	UNITS
EF2-07-002S	P-2007-G-Q4	NORMAL	FERMI	H-3	<	6.20E+02	PCI/L
EF2-07-002S	P-2008-G-Q1	NORMAL	FERMI	H-3	<	5.98E+02	PCI/L
EF2-07-002S	P-2008-G-Q2	NORMAL	AREVA	H-3	<	4.10E+02	PCI/L
EF2-07-002S	P-2008-G-Q3	NORMAL	AREVA	H-3	<	4.40E+02	PCI/L
EF2-07-002S	P-2008-G-Q4	NORMAL	AREVA	H-3	<	4.40E+02	PCI/L
EF2-07-003S	P-2007-G-Q4	NORMAL	FERMI	H-3	<	6.20E+02	PCI/L
EF2-07-003S	P-2008-G-Q1	NORMAL	FERMI	H-3	<	6.57E+02	PCI/L
EF2-07-003S	P-2008-G-Q2	NORMAL	AREVA	H-3	<	4.30E+02	PCI/L
EF2-07-003S	P-2008-G-Q3	NORMAL	AREVA	H-3	<	4.30E+02	PCI/L
EF2-07-003S	P-2008-G-Q4	NORMAL	AREVA	H-3	<	4.50E+02	PCI/L
EF2-07-005S	P-2007-G-Q4	NORMAL	FERMI	H-3	<	6.20E+02	PCI/L
EF2-07-005S	P-2007-G-Q4	DUPLICATE	FERMI	H-3	<	6.20E+02	PCI/L
EF2-07-005S	P-2008-G-Q1	NORMAL	FERMI	H-3	<	6.27E+02	PCI/L
EF2-07-005S	P-2008-G-Q2	NORMAL	AREVA	H-3	<	4.20E+02	PCI/L
EF2-07-005S	P-2008-G-Q2	DUPLICATE	AREVA	H-3	<	4.30E+02	PCI/L
EF2-07-005S	P-2008-G-Q3	DUPLICATE	AREVA	H-3	<	4.40E+02	PCI/L
EF2-07-005S	P-2008-G-Q3	NORMAL	AREVA	H-3	<	4.40E+02	PCI/L
EF2-07-005S	P-2008-G-Q4	NORMAL	AREVA	H-3	<	4.40E+02	PCI/L
EF2-07-007S	P-2007-G-Q4	NORMAL	FERMI	H-3	<	6.20E+02	PCI/L
EF2-07-007S	P-2008-G-Q1	NORMAL	FERMI	H-3	<	6.57E+02	PCI/L
EF2-07-007S	P-2008-G-Q2	NORMAL	AREVA	H-3	<	4.10E+02	PCI/L
EF2-07-007S	P-2008-G-Q3	NORMAL	AREVA	H-3	<	4.40E+02	PCI/L
EF2-07-007S	P-2008-G-Q4	NORMAL	AREVA	H-3	<	4.40E+02	PCI/L
EF2-07-008S	P-2007-G-Q4	NORMAL	FERMI	H-3	<	6.20E+02	PCI/L
EF2-07-008S	P-2008-G-Q1	NORMAL	FERMI	H-3	<	6.57E+02	PCI/L
EF2-07-008S	P-2008-G-Q2	NORMAL	AREVA	H-3	<	4.30E+02	PCI/L
EF2-07-008S	P-2008-G-Q3	NORMAL	AREVA	H-3	<	4.30E+02	PCI/L
EF2-07-008S	P-2008-G-Q4	NORMAL	AREVA	H-3	<	4.40E+02	PCI/L
EF2-07-012S	P-2007-G-Q4	NORMAL	FERMI	H-3	<	5.65E+02	PCI/L
EF2-07-012S	P-2008-G-Q1	NORMAL	FERMI	H-3	<	5.98E+02	PCI/L
EF2-07-012S	P-2008-G-Q2	NORMAL	AREVA	H-3	<	4.30E+02	PCI/L
EF2-07-012S	P-2008-G-Q3	NORMAL	AREVA	H-3		5.00E+02	PCI/L
EF2-07-012S	P-2008-G-Q4	NORMAL	AREVA	H-3		5.50E+02	PCI/L
EF2-07-013S	P-2007-G-Q4	NORMAL	FERMI	H-3		1.95E+03	PCI/L
EF2-07-013S	P-2008-G-Q1	NORMAL	FERMI	H-3	<	6.27E+02	PCI/L
EF2-07-013S	P-2008-G-Q2	NORMAL	AREVA	H-3		1.54E+03	PCI/L
EF2-07-013S	P-2008-G-Q3	NORMAL	AREVA	H-3		7.80E+02	PCI/L
EF2-07-013S	P-2008-G-Q4	NORMAL	AREVA	H-3		8.70E+02	PCI/L
EF2-07-014S	P-2007-G-Q4	NORMAL	FERMI	H-3		6.80E+02	PCI/L
EF2-07-014S	P-2008-G-Q1	NORMAL	FERMI	H-3	<	6.57E+02	PCI/L
EF2-07-014S	P-2008-G-Q1	DUPLICATE	FERMI	H-3	<	6.57E+02	PCI/L

EF2-07-014S	P-2008-G-Q2	NORMAL	AREVA	H-3		5.00E+02	PCI/L
EF2-07-014S	P-2008-G-Q3	NORMAL	AREVA	H-3		5.30E+02	PCI/L
EF2-07-014S	P-2008-G-Q4	NORMAL	AREVA	H-3		8.00E+02	PCI/L
EF2-07-015S	P-2007-G-Q4	NORMAL	FERMI	H-3	<	6.20E+02	PCI/L
EF2-07-015S	P-2008-G-Q1	NORMAL	FERMI	H-3	<	5.98E+02	PCI/L
EF2-07-015S	P-2008-G-Q2	NORMAL	AREVA	H-3	<	4.10E+02	PCI/L
EF2-07-015S	P-2008-G-Q2	DUPLICATE	AREVA	H-3	<	3.40E+02	PCI/L
EF2-07-015S	P-2008-G-Q3	NORMAL	AREVA	H-3	<	4.30E+02	PCI/L
EF2-07-015S	P-2008-G-Q4	NORMAL	AREVA	H-3	<	4.30E+02	PCI/L
EF2-07-016S	P-2007-G-Q4	NORMAL	FERMI	H-3	<	6.20E+02	PCI/L
EF2-07-016S	P-2008-G-Q1	NORMAL	FERMI	H-3	<	5.98E+02	PCI/L
EF2-07-016S	P-2008-G-Q2	NORMAL	AREVA	H-3	<	4.10E+02	PCI/L
EF2-07-016S	P-2008-G-Q3	NORMAL	AREVA	H-3	<	4.40E+02	PCI/L
EF2-07-017S	P-2007-G-Q4	NORMAL	FERMI	H-3	<	6.20E+02	PCI/L
EF2-07-017S	P-2008-G-Q1	NORMAL	FERMI	H-3	<	5.75E+02	PCI/L
EF2-07-017S	P-2008-G-Q2	NORMAL	AREVA	H-3	<	4.30E+02	PCI/L
EF2-07-017S	P-2008-G-Q3	NORMAL	AREVA	H-3	<	4.40E+02	PCI/L
EF2-07-017S	P-2008-G-Q4	NORMAL	AREVA	H-3	<	4.30E+02	PCI/L
EF2-07-018S	P-2007-G-Q4	NORMAL	FERMI	H-3	<	6.20E+02	PCI/L
EF2-07-018S	P-2008-G-Q1	NORMAL	FERMI	H-3	<	6.57E+02	PCI/L
EF2-07-018S	P-2008-G-Q2	NORMAL	AREVA	H-3	<	4.30E+02	PCI/L
EF2-07-018S	P-2008-G-Q3	NORMAL	AREVA	H-3	<	4.40E+02	PCI/L
EF2-07-018S	P-2008-G-Q4	NORMAL	AREVA	H-3	<	4.40E+02	PCI/L
EF2-07-019S	P-2007-G-Q4	NORMAL	FERMI	H-3	<	6.20E+02	PCI/L
EF2-07-019S	P-2008-G-Q1	NORMAL	FERMI	H-3	<	6.57E+02	PCI/L
EF2-07-019S	P-2008-G-Q2	NORMAL	AREVA	H-3		5.60E+02	PCI/L
EF2-07-019S	P-2008-G-Q3	NORMAL	AREVA	H-3	<	4.40E+02	PCI/L
EF2-07-019S	P-2008-G-Q4	NORMAL	AREVA	H-3	<	4.40E+02	PCI/L
EF2-07-020S	P-2007-G-Q4	NORMAL	FERMI	H-3	<	6.20E+02	PCI/L
EF2-07-020S	P-2008-G-Q1	NORMAL	FERMI	H-3	<	5.98E+02	PCI/L
EF2-07-020S	P-2008-G-Q2	NORMAL	AREVA	H-3	<	4.10E+02	PCI/L
EF2-07-020S	P-2008-G-Q3	NORMAL	AREVA	H-3	<	4.30E+02	PCI/L
EF2-07-020S	P-2008-G-Q4	NORMAL	AREVA	H-3	<	4.40E+02	PCI/L
EF2-07-021S	P-2007-G-Q4	NORMAL	FERMI	H-3	<	5.65E+02	PCI/L
EF2-07-021S	P-2008-G-Q1	NORMAL	FERMI	H-3	<	6.57E+02	PCI/L
EF2-07-021S	P-2008-G-Q2	NORMAL	AREVA	H-3		6.70E+02	PCI/L
EF2-07-021S	P-2008-G-Q3	NORMAL	AREVA	H-3	<	4.40E+02	PCI/L
EF2-07-021S	P-2008-G-Q4	NORMAL	AREVA	H-3		6.50E+02	PCI/L
EF2-07-022S	P-2007-G-Q4	NORMAL	FERMI	H-3	<	6.20E+02	PCI/L
EF2-07-022S	P-2008-G-Q1	NORMAL	FERMI	H-3	<	5.75E+02	PCI/L
EF2-07-022S	P-2008-G-Q2	NORMAL	AREVA	H-3	<	4.30E+02	PCI/L
EF2-07-022S	P-2008-G-Q3	NORMAL	AREVA	H-3		6.60E+02	PCI/L
EF2-07-022S	P-2008-G-Q4	NORMAL	AREVA	H-3	<	4.40E+02	PCI/L

EF2-07-023S	P-2007-G-Q4	NORMAL	FERMI	H-3	<	5.65E+02	PCI/L
EF2-07-023S	P-2008-G-Q1	NORMAL	FERMI	H-3	<	5.69E+02	PCI/L
EF2-07-023S	P-2008-G-Q2	NORMAL	AREVA	H-3		7.40E+02	PCI/L
EF2-07-023S	P-2008-G-Q3	NORMAL	AREVA	H-3	<	4.40E+02	PCI/L
EF2-07-023S	P-2008-G-Q4	NORMAL	AREVA	H-3	<	4.40E+02	PCI/L
EF2-07-024S	P-2007-G-Q4	NORMAL	FERMI	H-3		8.22E+02	PCI/L
EF2-07-024S	P-2008-G-Q1	NORMAL	FERMI	H-3	<	6.27E+02	PCI/L
EF2-07-024S	P-2008-G-Q1	DUPLICATE	FERMI	H-3	<	6.27E+02	PCI/L
EF2-07-024S	P-2008-G-Q2	NORMAL	AREVA	H-3		8.60E+02	PCI/L
EF2-07-024S	P-2008-G-Q3	NORMAL	AREVA	H-3	<	4.40E+02	PCI/L
EF2-07-024S	P-2008-G-Q4	NORMAL	AREVA	H-3		6.10E+02	PCI/L
EF2-07-025S	P-2007-G-Q4	NORMAL	FERMI	H-3	<	6.20E+02	PCI/L
EF2-07-025S	P-2008-G-Q1	NORMAL	FERMI	H-3	<	6.57E+02	PCI/L
EF2-07-025S	P-2008-G-Q2	NORMAL	AREVA	H-3		1.05E+03	PCI/L
EF2-07-025S	P-2008-G-Q2	DUPLICATE	AREVA	H-3		1.05E+03	PCI/L
EF2-07-025S	P-2008-G-Q3	NORMAL	AREVA	H-3		6.00E+02	PCI/L
EF2-07-025S	P-2008-G-Q3	DUPLICATE	AREVA	H-3		8.70E+02	PCI/L
EF2-07-025S	P-2008-G-Q4	NORMAL	AREVA	H-3		6.10E+02	PCI/L
EF2-07-026S	P-2007-G-Q4	NORMAL	FERMI	H-3	<	6.20E+02	PCI/L
EF2-07-026S	P-2008-G-Q1	NORMAL	FERMI	H-3	<	5.98E+02	PCI/L
EF2-07-026S	P-2008-G-Q2	NORMAL	AREVA	H-3	<	4.10E+02	PCI/L
EF2-07-026S	P-2008-G-Q3	NORMAL	AREVA	H-3	<	4.40E+02	PCI/L
EF2-07-026S	P-2008-G-Q4	NORMAL	AREVA	H-3	<	4.40E+02	PCI/L
EF2-07-026S	P-2008-G-Q4	DUPLICATE	AREVA	H-3	<	4.40E+02	PCI/L
EF2-07-027S	P-2007-G-Q4	NORMAL	FERMI	H-3	<	6.20E+02	PCI/L
EF2-07-027S	P-2008-G-Q1	NORMAL	FERMI	H-3	<	5.75E+02	PCI/L
EF2-07-027S	P-2008-G-Q2	NORMAL	AREVA	H-3	<	4.30E+02	PCI/L
EF2-07-027S	P-2008-G-Q3	NORMAL	AREVA	H-3	<	4.20E+02	PCI/L
EF2-07-027S	P-2008-G-Q4	NORMAL	AREVA	H-3	<	4.50E+02	PCI/L
EF2-07-028S	P-2007-G-Q4	NORMAL	FERMI	H-3	<	6.20E+02	PCI/L
EF2-07-028S	P-2008-G-Q1	NORMAL	FERMI	H-3	<	5.98E+02	PCI/L
EF2-07-028S	P-2008-G-Q2	NORMAL	AREVA	H-3	<	4.10E+02	PCI/L
EF2-07-028S	P-2008-G-Q3	NORMAL	AREVA	H-3	<	4.40E+02	PCI/L
EF2-07-028S	P-2008-G-Q4	NORMAL	AREVA	H-3	<	4.30E+02	PCI/L
EF2-07-029S	P-2007-G-Q4	NORMAL	FERMI	H-3	<	6.20E+02	PCI/L
EF2-07-029S	P-2008-G-Q1	NORMAL	FERMI	H-3	<	6.57E+02	PCI/L
EF2-07-029S	P-2008-G-Q2	NORMAL	AREVA	H-3	<	4.30E+02	PCI/L
EF2-07-029S	P-2008-G-Q3	NORMAL	AREVA	H-3	<	4.30E+02	PCI/L
EF2-07-029S	P-2008-G-Q4	NORMAL	AREVA	H-3	<	4.40E+02	PCI/L
EF2-07-031S	P-2007-G-Q4	NORMAL	FERMI	H-3	<	6.20E+02	PCI/L
EF2-07-031S	P-2008-G-Q1	NORMAL	FERMI	H-3	<	5.75E+02	PCI/L
EF2-07-031S	P-2008-G-Q2	NORMAL	AREVA	H-3	<	4.30E+02	PCI/L
EF2-07-031S	P-2008-G-Q3	NORMAL	AREVA	H-3	<	4.40E+02	PCI/L
EF2-07-031S	P-2008-G-Q4	NORMAL	AREVA	H-3	<	4.30E+02	PCI/L

MW-10	P-2008-G-Q4	NORMAL	AREVA	H-3	<	4.50E+02	PCI/L
MW-11	P-2008-G-Q4	NORMAL	AREVA	H-3	<	4.40E+02	PCI/L
MW-18	P-2008-G-Q4	NORMAL	AREVA	H-3	<	4.40E+02	PCI/L
MW-9	P-2008-G-Q4	NORMAL	AREVA	H-3	<	4.50E+02	PCI/L

Map of Monitor Well Locations

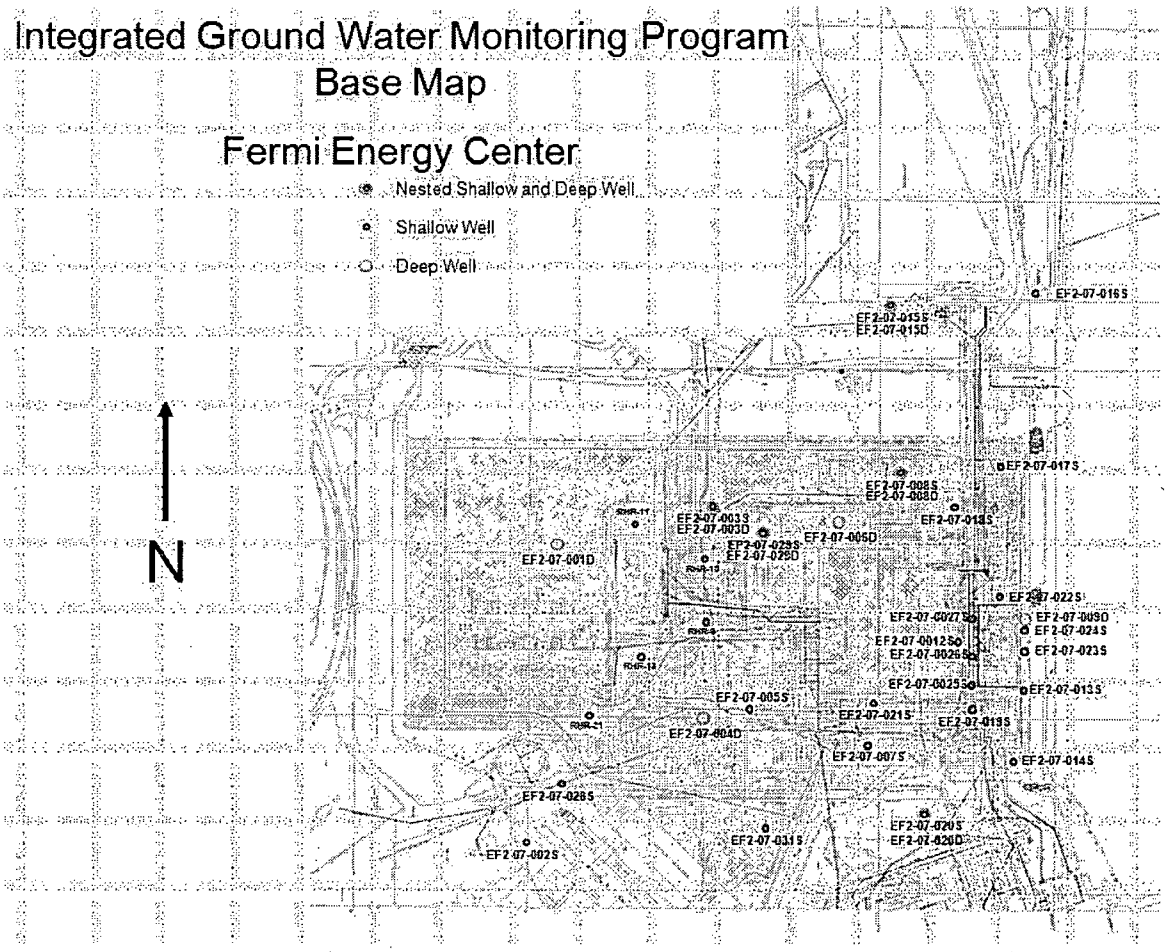

Appendix C

Offsite Dose Calculation Manual with 2008 Revisions

(ODCM Revision 19)

Pages Revised in Latest Revision

0-1, 3-13, 10-5 through 10-9 6/08

Implementation Plan

These revisions go into effect upon approval.

Information and Procedures				
DSN TRM VOL II	**Revision** 19	**Change #** 08-026-ODM	**DTC** TMTRM	**File #** 1754
IP Code I	**Date Approved** 6/18/08	**Released By** N/A	**Date Issued** 7-15-08	**Recipient** 1214

6/08

CONTROLLED

FERMI 2 - TECHNICAL REQUIREMENTS MANUAL

VOLUME II – LIST OF EFFECTIVE PAGES

OFFSITE DOSE CALCULATION MANUAL

Page	Revision	Page	Revision
0-1	19	3-15	13
0-2	13	3-16	13
0-3	13	3-17	13
0-4	13	3-18	14
0-5	13	3-19	13
0-6	13	3-20	14
		3-21	14
1-1	13	3-22	14
1-2	14	3-23	13
		3-24	18
2-1	13	3-25	13
2-2	14	3-26	18
2-3	14	3-27	14
2-4	14	3-28	14
2-5	14	3-29	14
2-6	14	3-30	14
2-7	14	3-31	13
		3-32	18
3-1	13	3-33	18
3-2	14	3-34	13
3-3	14	3-35	18
3-4	15	3-36	13
3-5	13	3-37	18
3-6	14	3-38	13
3-7	14	3-39	13
3-8	14	3-40	13
3-9	13	3-41	13
3-10	18	3-42	13
3-11	13	3-43	13
3-12	13	3-44	13
3-13	19	3-45	13
3-14	13	3-46	13

6/08

6/08

FERMI 2 - TECHNICAL REQUIREMENTS MANUAL

VOLUME II – LIST OF EFFECTIVE PAGES

OFFSITE DOSE CALCULATION MANUAL

Page	Revision	Page	Revision
4-1	13	6-19	13
4-2	13	6-20	13
4-3	13	6-21	13
4-4	13	6-22	13
4-5	13		
4-6	13		
4-7	13	7-1	13
4-8	13	7-2	18
		7-3	13
5-1	13	7-4	18
5-2	13	7-5	13
5-3	13	7-6	13
5-4	18	7-7	13
5-5	13	7-8	13
		7-9	13
6-1	13	7-10	18
6-2	13	7-11	13
6-3	14	7-12	14
6-4	13	7-13	18
6-5	13	7-14	18
6-6	13	7-15	13
6-7	14	7-16	13
6-8	14	7-17	18
6-9	13	7-18	13
6-10	13	7-19	13
6-11	13	7-20	13
6-12	13	7-21	13
6-13	13	7-22	13
6-14	13	7-23	13
6-15	13	7-24	13
6-16	13	7-25	13
6-17	13	7-26	13
6-18	13		

FERMI 2 - TECHNICAL REQUIREMENTS MANUAL

VOLUME II – LIST OF EFFECTIVE PAGES

OFFSITE DOSE CALCULATION MANUAL

Page	Revision	Page	Revision
7-27	13	9-1	13
7-28	13	9-2	13
7-29	13	9-3	18
7-30	13	9-4	13
7-31	13		
7-32	13	10-1	13
7-33	13	10-2	13
7-34	13	10-3	13
7-35	13	10-4	13
7-36	13	10-5	19
7-37	13	10-6	19
7-38	13	10-7	19
7-39	13	10-8	19
7-40	13	10-9	19
7-41	13	10-10	13
7-42	13	10-11	13
7-43	13	10-12	13
7-44	13	10-13	18
7-45	13	10-14	18
7-46	13	10-15	18
7-47	13		
7-48	13		
7-49	13		
7-50	13		
8-1	13		
8-2	13		
8-3	13		
8-4	13		
8-5	13		
8-6	13		
8-7	13		
8-8	13		
8-9	13		

6/08

TABLE OF CONTENTS

Page		Section	
1-1	1.0	INTRODUCTION	
PART I - RADIOLOGICAL EFFLUENT CONTROLS			
2-1	2.0	DEFINITIONS	
3-1	3.0	CONTROLS AND SURVEILLANCE REQUIREMENTS	
3-2		3/4.0	Controls and Surveillance Requirements Applicability
3-5		3/4.3.7.11	Radioactive Liquid Effluent Monitoring Instrumentation
3-10		3/4.3.7.12	Radioactive Gaseous Effluent Monitoring Instrumentation
3-17		3/4.11.1.1	Liquid Effluents Concentration
3-21		3/4.11.1.2	Liquid Effluents Dose
3-22		3/4.11.1.3	Liquid Waste Treatment
3-23		3/4.11.2.1	Gaseous Effluents Dose Rate
3-27		3/4.11.2.2	Gaseous Effluents Dose - Noble Gases
3-28		3/4.11.2.3	Gaseous Effluents Dose - Iodine-131, Iodine-133, Tritium, and Radionuclides in Particulate Form
3-29		3/4.11.2.4	Offgas Treatment System
3-30		3/4.11.2.5	Ventilation Exhaust Treatment System
3-31		3/4.11.2.8	Venting or Purging
3-32		3/4.11.4	Radioactive Effluents Total Dose
3-33		3/4.12.1	Radiological Environmental Monitoring Program
3-44		3/4.12.2	Land Use Census
3-45		3/4.12.3	Interlaboratory Comparison Program
4-1	4.0	BASES	
5-1	5.0	ADMINISTRATIVE CONTROLS	
5-2		5.9.1.7	Annual Radiological Environmental Operating Report
5-2		5.9.1.8	Annual Radioactive Effluent Release Report
5-4		5.15	Major Changes to Radioactive Liquid, Gaseous, and Solid Waste Treatment Systems

TABLE OF CONTENTS (continued)

Page	Section			
PART II - CALCULATIONAL METHODS				
6-1	6.0	LIQUID EFFLUENTS		
6-2		6.1	Radiation Monitoring Instrumentation and Controls	
6-2			6.1.1	Offsite Dose Calculation Manual (ODCM) 3.3.7.11 Requirement
6-3			6.1.2	Non-ODCM Required Monitor
6-4		6.2	Sampling and Analysis of Liquid Effluents	
6-4			6.2.1	BATCH Releases
6-5			6.2.2	CONTINUOUS Releases
6-5		6.3	Liquid Effluent Monitor Setpoints	
6-6			6.3.1	Liquid Radwaste Effluent Line Monitor
6-9			6.3.2	Circulating Water Reservoir Decant Line Radiation Monitor (D11-N402)
6-10			6.3.3	Generic, Conservative Alarm Setpoint for D11-N402
6-11			6.3.4	Alarm Setpoint for GSW and RHR System Radiation Monitors
6-11			6.3.5	Alarm Response - Evaluating Actual Release Conditions
6-12			6.3.6	Liquid Radwaste Setpoint Determination With Contaminated Circulating Water Reservoir
6-13		6.4	Contaminated GSW or RHR System - Quantifying and Controlling Releases	
6-14		6.5	Liquid Effluent Dose Calculation - 10 CFR 50	
6-14			6.5.1	MEMBER OF THE PUBLIC Dose - Liquid Effluents
6-16			6.5.2	Contaminated CWR System - Dose Calculation
6-17		6.6	Liquid Effluent Dose Projections	
7-1	7.0	GASEOUS EFFLUENTS		
7-2		7.1	Radiation Monitoring Instrumentation and Controls	
7-2			7.1.1	Effluent Monitoring - Ventilation System Releases
7-2			7.1.2	Main Condenser Offgas Monitoring
7-3			7.1.3	Reactor Building Ventilation Monitors (Gulf Atomic)
7-3		7.2	Sampling and Analysis of Gaseous Effluents	
7-3			7.2.1	Containment PURGE
7-4			7.2.2	Ventilation System Releases

TABLE OF CONTENTS (continued)

Page		Section	
7-5		7.3	Gaseous Effluent Monitor Setpoint Determination
7-5		7.3.1	Ventilation System Monitors
7-7		7.3.2	Setpoint Determination with No Nuclides Detected
7-7		7.3.3	Gaseous Effluent Alarm Response - Evaluating Actual Release Conditions
7-8		7.4	Primary Containment VENTING and PURGING
7-8		7.4.1	Release Rate Evaluation
7-9		7.4.2	Alarm Setpoint Evaluation
7-10		7.5	Quantifying Releases - Noble Gases
7-10		7.5.1	Sampling Protocol
7-11		7.6	Calculation of Activity Released
7-11		7.7	Site Boundary Dose Rate - Radioiodine and Particulates
7-13		7.8	Noble Gas Effluent Dose Calculations - 10 CFR 50
7-13		7.8.1	UNRESTRICTED AREA Dose - Noble Gases
7-14		7.9	Radioiodine and Particulate Dose Calculations - 10 CFR 50
7-14		7.9.1	UNRESTRICTED AREA Dose - Radioiodine, Particulates, and Tritium
7-16		7.10	Gaseous Effluent Dose Projection
8-1	8.0	SPECIAL DOSE ANALYSES	
8-2		8.1	Doses Due to Activities inside the SITE BOUNDARY
8-2		8.2	Doses to MEMBERS OF THE PUBLIC - 40 CFR 190
8-3		8.2.1	Effluent Dose Calculations
8-4		8.2.2	Direct Exposure Dose Determination
8-4		8.2.3	Dose Assessment Based on Radiological Environmental Monitoring Data
9-1	9.0	ASSESSMENT OF LAND USE CENSUS DATA	
9-2		9.1	Land Use Census as Required by ODCM 3.12.2
9-4		9.2	Land Use Census to Support Realistic Dose Assessment

TABLE OF CONTENTS (continued)

Page	Section	
10-1	10.0	RADIOLOGICAL ENVIRONMENTAL MONITORING PROGRAM
10-2	10.1	Sampling Locations
10-2	10.2	Reporting Levels
10-3	10.3	Interlaboratory Comparison Program

TABLES

Page	Table	
2-7	2.1	Surveillance Frequency Notation
2-8	2.2	Operational Conditions
3-6	3.3.7.11-1	Radioactive Liquid Effluent Monitoring Instrumentation
3-8	4.3.7.11-1	Radioactive Liquid Effluent Monitoring Instrumentation Surveillance Requirements
3-11	3.3.7.12-1	Radioactive Gaseous Effluent Monitoring Instrumentation
3-14	4.3.7.12-1	Radioactive Gaseous Effluent Monitoring Instrumentation Surveillance Requirements
3-18	4.11.1.1.1-1	Radioactive Liquid Waste Sampling and Analysis Program
3-24	4.11.2.1.2-1	Radioactive Gaseous Waste Sampling and analysis Program
3-35	3.12.1-1	Radiological Environmental Monitoring Program
3-40	3.12.1-2	Reporting Levels for Radioactivity Concentrations in Environmental Samples
3-41	4.12.1-1	Detection Capabilities for Environmental Sample Analysis
6-19	6.0-1	Fermi 2 Site Specific Liquid Ingestion Dose Commitment Factors, A_{io}
6-21	6.0-2	Bioaccumulation Factors (BFi)

TABLE OF CONTENTS (continued)

TABLES (continued)

Page	Table	
7-17	7.0-1	Values for Evaluating Gaseous Release Rates and Alarm Setpoints
7-18	7.0-2	Dose Factors for Noble Gases
7-19	7.0-3	Controlling Locations, Pathways and Atmospheric Dispersion for Dose Calculations
7-20	7.0-4	Gaseous Effluent Pathway Dose Commitment Factors
8-8	8.0-1	Assumptions for Assessing Doses Due to Activities inside SITE BOUNDARY
8-9	8.0-2	Recommended Exposure Rates in Lieu of Site Specific Data
10-4	10.0-1	Radiological Environmental Monitoring Program, Fermi 2 Sample Locations and Associated Media

FIGURES

Page	Figure	
3-46	3.0-1	Map Defining Unrestricted Areas and Site Boundary for Radioactive Gaseous and Liquid Effluents
6-22	6.0-1	Liquid Radioactive Effluent Monitoring and Processing Diagram
7-50	7.0-1	Gaseous Radioactive Effluent Monitoring and Ventilation Systems Diagram

END OF SECTION 0.0

SECTION 1.0

INTRODUCTION

1.0 INTRODUCTION

Part I of the Fermi 2 Offsite Dose Calculation Manual (ODCM), which includes Sections 2.0 through 5.0, contains the controls and surveillance requirements for radioactive effluents and radiological environmental monitoring. It also contains requirements for the Annual Radiological Environmental Operating Report and the Annual Radioactive Effluent Release Report.

This satisfies the requirements for Technical Specification 5.5.1, the Offsite Dose Calculation Manual (ODCM), and Technical Specification 5.5.4, Radioactive Effluent Controls Program.

Part II of the ODCM describes the methodology and parameters used in calculating radioactive liquid and gaseous effluent monitoring instrumentation alarm/trip setpoints, and in calculating liquid and gaseous effluent dose rates and cumulative doses.

The methodology provided in Part II of this manual is acceptable for use in demonstrating compliance with the dose limits for members of the public of 10 CFR 20, the cumulative dose criteria of 10 CFR 50, Appendix I and 40 CFR 190, and the controls in Part I of this manual.

Part II, Section 6.0 of the ODCM describes equipment for monitoring and controlling liquid effluents, sampling requirements, and dose evaluation methods. Section 7.0 provides similar information on gaseous effluent controls, sampling, and dose evaluation. Section 8.0 describes special dose analyses required for compliance with Fermi 2 Offsite Dose Calculation Manual and 40 CFR 190. Section 9.0 describes the role of the annual land use census in identifying the controlling pathways and locations of exposure for assessing potential off-site doses. Section 10.0 describes the Radiological Environmental Monitoring Program.

The ODCM will be maintained at Fermi 2 for use as a listing of radiological effluent controls and surveillance requirements, as well as a reference guide and training document for accepted methodologies and calculations. Changes to the ODCM calculational methodologies and parameters will be made as necessary to ensure reasonable conservatism in keeping with the principles of 10 CFR 50.36a and Appendix I for demonstrating that radioactive effluents are "As Low As Reasonably Achievable."

NOTE: Throughout this document words appearing all capitalized denote either definitions specified in the Fermi 2 Controls or common acronyms.

END OF SECTION 1.0

SECTION 2.0

DEFINITIONS

2.0 DEFINITIONS

Term	Definition
ACTIONS	ACTIONS shall be that part of a Specification that prescribes Required Actions to be taken under designated Conditions within specified Completion Times.
CHANNEL CALIBRATION	A CHANNEL CALIBRATION shall be the adjustment, as necessary, of the channel output such that it responds within the necessary range and accuracy to known values of the parameter that the channel monitors. A CHANNEL CALIBRATION shall encompass the entire channel including the required sensor, alarm, display, and trip functions, and shall include a CHANNEL FUNCTIONAL TEST. Calibration of instrument channels with resistance temperature detectors (RTD) or thermocouple sensors may consist of an inplace qualitative assessment of sensor behavior and normal calibration of the remaining adjustable devices in the channel. A CHANNEL CALIBRATION may be performed by means of any series of sequential, overlapping, or total channel steps so that the entire channel is calibrated.
CHANNEL CHECK	A CHANNEL CHECK shall be the qualitative assessment, by observation, of channel behavior during operation. This determination shall include, where possible, comparison of the channel indication and/or status with other indications and/or status derived from independent instrument channels measuring the same parameter.
CHANNEL FUNCTIONAL TEST	A CHANNEL FUNCTIONAL TEST shall be the injection of a simulated or actual signal into the channel as close to the sensor as practicable to verify FUNCTIONAL CAPABILITY, including required alarm, interlock, display, and trip functions, and channel failure trips. A CHANNEL FUNCTIONAL TEST may be performed by means of any series of sequential, overlapping, or total channel steps so that the entire channel is tested.

Term	Definition
FREQUENCY NOTATION	The FREQUENCY NOTATION specified for the performance of Surveillance Requirements shall correspond to the intervals defined in Table 2.1.
FUNCTIONALLY CAPABLE	A system, subsystem, division, component, or device shall be FUNCTIONALLY CAPABLE or have FUNCTIONAL CAPABILITY when it is capable of performing its specified safety function(s) and when all necessary attendant instrumentation, controls, normal or emergency electrical power, cooling and seal water, lubrication, and other auxiliary equipment that are required for the system, subsystem, division, component, or device to perform its specified safety function(s) are also capable of performing their related support function(s).
MEMBER(S) OF THE PUBLIC	MEMBER(S) OF THE PUBLIC means any individual except when that individual is receiving an occupational dose.
MODE	A MODE shall correspond to any one inclusive combination of mode switch position, average reactor coolant temperature, and reactor vessel head closure bolt tensioning specified in Table 2.2 with fuel in the reactor vessel.
MPC	(Maximum Permissible Concentration in water) For individual nuclides, 10 times the concentration values in 10 CFR Part 20.1001-20.2402, Appendix B, Table 2, Column 2, except for noble gases which are limited to 2E-4 uCi/ml total activity concentration. For nuclide mixtures, concentrations for which the sum of individual nuclide concentrations divided by their corresponding individual MPC values equals 1.
OCCUPATIONAL DOSE	OCCUPATIONAL DOSE means the dose received by an individual in the course of employment in which the individual's assigned duties involve exposure to radiation and/or to radioactive material from licensed and unlicensed sources of radiation, whether in the possession of the licensee or other person. Occupational dose does not include dose received from background radiation, as a patient from medical practices, from voluntary participation in medical research programs, or as a member of the general public.

Term	Definition
OFF-GAS TREATMENT SYSTEM	An OFF-GAS TREATMENT SYSTEM is any system designed and installed to reduce radioactive gaseous effluents by collecting reactor coolant system offgases from the reactor coolant and providing for delay or holdup for the purpose of reducing the total radioactivity prior to release to the environment.
OFFSITE DOSE CALCULATIONAL MANUAL	The OFFSITE DOSE CALCULATION MANUAL (ODCM) shall contain the methodology and parameters used in the calculation of offsite doses resulting from radioactive gaseous and liquid effluent, in the calculation of gaseous and liquid effluent monitoring alarm/trip setpoints, and in the conduct of the radiological environmental monitoring program. The ODCM shall also contain (1) the Radiological Effluent Controls and Radiological Environmental Monitoring Program Controls, and (2) descriptions of the information that should be included in the Annual Radiological Environmental Operating and Annual Radioactive Effluent Reports required by Controls 5.9.1.7 and 5.9.1.8.
PUBLIC DOSE	PUBLIC DOSE means the dose received by a member of the public from exposure to radiation and/or radioactive material released by a licensee, or to any other source of radiation under the control of a licensee. It does not include occupational dose or doses received from background radiation, as a patient from medical practices, or from voluntary participation in medical research programs.
PURGE - PURGING	PURGE or PURGING is the controlled process of discharging air or gas from a confinement to maintain temperature, pressure, humidity, concentration or other operating condition, in such a manner that replacement air or gas is required to purify the confinement.
RATED THERMAL POWER (RTP)	RTP shall be a total reactor core heat transfer rate to the reactor coolant of 3430 MWt.
REPORTABLE EVENT	A REPORTABLE EVENT shall be any of those conditions specified in Section 50.73 to 10 CFR Part 50.

Term	Definition
SITE BOUNDARY	The SITE BOUNDARY shall be that line beyond which the land is neither owned, nor leased, nor otherwise controlled, by the licensee.
SOURCE CHECK	A SOURCE CHECK shall be the qualitative assessment of channel response when the channel sensor is exposed to a radioactive source.
THERMAL POWER	THERMAL POWER shall be the total reactor core heat transfer rate to the reactor coolant.
UNRESTRICTED AREA	The Fermi 2 Energy Center UNRESTRICTED AREA includes all areas outside the site boundary.
VENTILATION EXHAUST TREATMENT SYSTEM	A VENTILATION EXHAUST TREATMENT SYSTEM shall be any system designed and installed to reduce gaseous radioiodine or radioactive material in particulate form in effluents by passing ventilation or vent exhaust gases through charcoal adsorbers and/or HEPA filters for the purpose of removing iodines or particulates from the gaseous exhaust stream prior to the release to the environment. Such a system is not considered to have any effect on noble gas effluents. Engineered Safety Feature (ESF) atmospheric cleanup systems are not considered to be VENTILATION EXHAUST TREATMENT SYSTEM components.
VENTING	VENTING shall be the controlled process of discharging air or gas from a confinement to maintain temperature, pressure, humidity, concentration or other operating condition, in such a manner that replacement air or gas is not provided or required during VENTING. Vent, used in system names, does not imply a VENTING process.

TABLE 2.1

SURVEILLANCE FREQUENCY NOTATION

NOTATION	FREQUENCY
S	At least once per 12 hours.
D	At least once per 24 hours.
W	At least once per 7 days.
M	At least once per 31 days.
Q	At least once per 92 days.
SA	At least once per 184 days.
A	At least once per 366 days.
R	At least once per 18 months (550 days).
S/U	Prior to each reactor startup.
P	Prior to each radioactive release.
N.A.	Not applicable.

TABLE 2.2

MODES

MODE	TITLE	REACTOR MODE SWITCH POSITION	AVERAGE REACTOR COOLANT TEMPERATURE (°F)
1	Power Operation	Run	NA
2	Startup	Refuel[a] or Startup/Hot Standby	NA
3	Hot Shutdown[a]	Shutdown	> 200
4	Cold Shutdown[a]	Shutdown	≤ 200
5	Refueling[b]	Shutdown or Refuel	NA

(a) All reactor vessel head closure bolts fully tensioned.

(b) One or more reactor vessel head closure bolts less than fully tensioned.

END OF SECTION 2.0

SECTION 3.0

CONTROLS

AND

SURVEILLANCE REQUIREMENTS

3/4 CONTROLS AND SURVEILLANCE REQUIREMENTS

3/4.0 APPLICABILITY

CONTROLS

3.0.1 Controls shall be met during the MODES or other specified conditions in the Applicability, except as provided in Control 3.0.2.

3.0.2 Upon discovery of a failure to meet a Control, the Actions shall be met, except as provided in Control 3.0.5.

If the Control is met or is no longer applicable prior to expiration of the specified completion time(s), completion of the Action(s) is not required, unless otherwise stated.

3.0.3 When a Control is not met and the associated ACTIONS are not met, an associated ACTION is not provided, or if directed by the associated ACTIONS, the unit shall be placed in a MODE or other specified condition in which the Control is not applicable. Action shall be initiated within 1 hour to place the unit, as applicable, in:

1. Mode 2 within 7 hours;
2. Mode 3 within 13 hours; and
3. Mode 4 within 37 hours.

Exceptions to this Control are stated in the individual Controls.

Where corrective measures are completed that permit operation in accordance with the Control or ACTIONS, completion of the actions required by Control 3.0.3 is not required.

Control 3.0.3 is only applicable in MODES 1, 2, and 3.

3.0.4 When a Control is not met, entry into a MODE or other specified condition in the Applicability shall not be made except when the associated ACTIONS to be entered permit continued operation in the MODE or other specified condition in the Applicability for an unlimited period of time. This Specification shall not prevent changes in MODES or other specified conditions in the Applicability that are required to comply with ACTIONS or that are part of a shutdown of the unit.

Exceptions to this Control are stated in the individual Controls. These exceptions allow entry into MODES or other specified conditions in the Applicability when the associated ACTIONS to be entered allow unit operation in the MODE or other specified condition in the Applicability only for a limited period of time.

Control 3.0.4 is only applicable for entry into a MODE or other specified condition in the Applicability in MODES 1, 2, and 3.

3.0.5 Equipment removed from service or declared not FUNCTIONALLY CAPABLE to comply with ACTIONS may be returned to service under administrative control solely to perform testing required to demonstrate its FUNCTIONAL CAPABILITY or the FUNCTIONAL CAPABILITY of other equipment. This is an exception to Control 3.0.2 for the system returned to service under administrative control to perform the testing required to demonstrate FUNCTIONAL CAPABILITY.

SURVEILLANCE REQUIREMENTS

4.0.1 Surveillance Requirements shall be met during the MODES or other specified conditions in the Applicability for individual Controls, unless otherwise stated in the Surveillance Requirements. Failure to meet a Surveillance, whether such failure is experienced during the performance of the Surveillance or between performances of the Surveillance, shall be failure to meet the Control. Failure to perform a Surveillance within the specified Frequency shall be failure to meet the Control except as provided in Surveillance Requirement 4.0.3. Surveillances do not have to be performed on equipment which is not FUNCTIONALLY CAPABLE or variables outside specified limits.

4.0.2 The specified Frequency is met if the Surveillance is performed within 1.25 times the interval specified in the Frequency, as measured from the previous performance or as measured from the time a specified condition of the Frequency is met.

For Frequencies specified as "once," the above interval extension does not apply.

If a Completion Time requires periodic performance on a "once per ..." basis, the above Frequency extension applies to each performance after the initial performance.

Exceptions to this Control are stated in the individual Controls.

4.0.3 If it is discovered that a Surveillance was not performed within its specified Frequency, then compliance with the requirement to declare the Control not met may be delayed, from the time of discovery, up to 24 hours or up to the limit of the specified Frequency, whichever is greater. This delay period is permitted to allow performance of the Surveillance. A risk evaluation shall be performed for any Surveillance delayed greater than 24 hours and the risk impact shall be managed.

If the Surveillance is not performed within the delay period, the Control must immediately be declared not met, and the applicable ACTIONS must be entered.

When the Surveillance is performed within the delay period and the Surveillance is not met, the Control must immediately be declared not met, and the applicable ACTIONS must be entered.

4.0.4 Entry into a MODE or other specified condition in the Applicability of a Control shall not be made unless the Control's Surveillances have been met within their specified Frequency. This provision shall not prevent entry into MODES or other specified conditions in the Applicability that are required to comply with ACTIONS or that are part of a shutdown of the unit.

4.0.4 is only applicable for entry into a MODE or other specified condition in the Applicability in MODES 1, 2, and 3.

RADIOACTIVE LIQUID EFFLUENT MONITORING INSTRUMENTATION

CONTROLS

3.3.7.11 The radioactive liquid effluent monitoring instrumentation channels shown in Table 3.3.7.11-1 shall be FUNCTIONALLY CAPABLE with their alarm/trip setpoints set to ensure that the limits of Control 3.11.1.1 are not exceeded. The alarm/trip setpoints of these channels shall be determined and adjusted in accordance with the methodology and parameters in the OFFSITE DOSE CALCULATIONAL MANUAL (ODCM).

APPLICABILITY: At all times.

ACTION:

a. With a radioactive liquid effluent monitoring instrumentation channel alarm/trip setpoint less conservative than required by the above control, immediately suspend the release of radioactive liquid effluents monitored by the affected channel, or declare the channel not FUNCTIONALLY CAPABLE, or change the setpoint so it is acceptably conservative.

b. With less than the minimum number of radioactive liquid effluent monitoring instrumentation channels FUNCTIONALLY CAPABLE, take the ACTION shown in Table 3.3.7.11-1. Restore the instrumentation which is not FUNCTIONALLY CAPABLE to FUNCTIONALLY CAPABLE status within 30 days and, if unsuccessful, explain why this condition was not corrected in a timely manner in the next Annual Radioactive Effluent Release Report.

c. The provisions of Controls 3.0.3 and 3.0.4 are not applicable.

SURVEILLANCE REQUIREMENTS

4.3.7.11 Each radioactive liquid effluent monitoring instrumentation channel shall be demonstrated FUNCTIONALLY CAPABLE by performance of the CHANNEL CHECK, CHANNEL CALIBRATION, and CHANNEL FUNCTIONAL TEST operations at the frequencies shown in Table 4.3.7.11-1.

TABLE 3.3.7.11-1

RADIOACTIVE LIQUID EFFLUENT MONITORING INSTRUMENTATION

Instrument	*Minimum Channels Functionally Capable*	*Action*
1. GROSS RADIOACTIVITY MONITORS PROVIDING ALARM AND AUTOMATIC TERMINATION OF RELEASE		
a. Liquid Radwaste Effluent Line D11-N007	1	110
2. GROSS RADIOACTIVITY MONITORS PROVIDING ALARM BUT NOT PROVIDING AUTOMATIC TERMINATION OF RELEASE		
a. Circulating Water Reservoir Decant Line D11-N402	1	111
3. FLOW RATE MEASUREMENT DEVICES *		
a. Liquid Radwaste Effluent Line G11-R703	1	112

TABLE NOTATION

* The circulating water reservoir decant line flow rate monitor has been removed. The flow rate in this decant line is now measured using certified pump performance curves for the circulating water reservoir decant pumps, together with readings from pump discharge pressure gauges and reservoir level indication.

TABLE 3.3.7.11-1 (Continued)

TABLE NOTATIONS

ACTION 110 - With the number of channels FUNCTIONALLY CAPABLE less than that required by the Minimum Channels FUNCTIONALLY CAPABLE requirement, effluent releases from this pathway may continue provided that prior to initiating a release:

a. At least two independent samples are analyzed in accordance with Surveillance Requirement 4.11.1.1.1, and

b. At least two technically qualified individuals independently verify the release rate calculations and discharge line valving (one technically qualified individual can be the preparer of the calculation, the other independently reviews the release rate calculations to verify accuracy);

Otherwise, suspend release of radioactive effluents via this pathway.

ACTION 111 - With the number of channels FUNCTIONALLY CAPABLE less than the Minimum Channels FUNCTIONALLY CAPABLE requirement, radioactive effluent releases via this pathway may continue provided that grab samples are collected and analyzed at least once per 12 hours for gross radioactivity (beta or gamma) at a lower limit of detection of at least 10^{-7} microcurie/ml, for Cs-137. Otherwise, suspend release of radioactive effluents via this pathway. If radioactive effluent releases are not in progress, i.e., if no Waste Sample Tank (or other tank containing radioactive liquid) is being released and the circulating water is not contaminated as shown by the most recent circulating water sample(s), this sampling requirement does not apply.

ACTION 112 - With the number of channels FUNCTIONALLY CAPABLE less than required by the Minimum Channels FUNCTIONALLY CAPABLE requirement, radioactive effluent releases via this pathway may continue provided the flow rate is estimated at least once per 4 hours during actual releases. Otherwise, suspend release of radioactive effluents via this pathway. If radioactive effluent releases are not in progress, i.e., if no Waste Sample Tank (or other tank containing radioactive liquid) is being released, this requirement does not apply.

TABLE 4.3.7.11-1

RADIOACTIVE LIQUID EFFLUENT MONITORING INSTRUMENTATION SURVEILLANCE REQUIREMENTS

Instrument	*Channel Check*	*Source Check*	*Channel Calibration*	*Channel Functional Test*
1. GROSS RADIOACTIVITY MONITORS PROVIDING ALARM AND AUTOMATIC TERMINATION OF RELEASE				
a. Liquid Radwaste Effluent Line	P	P	R(3)	Q(1) (2)
2. GROSS BETA OR GAMMA RADIOACTIVITY MONITORS PROVIDING ALARM BUT NOT PROVIDING AUTOMATIC TERMINATION OF RELEASE				
a. Circulating Water Reservoir Decant Line D11-N402	D	M	R(3)	Q(5)
3. FLOW RATE MEASUREMENT DEVICES (4)				
a. Liquid Radwaste Effluent Line	D(4)	N.A.	R	Q

TABLE 4.3.7.11-1 (Continued)

TABLE NOTATIONS

(1) The CHANNEL FUNCTIONAL TEST shall also demonstrate that automatic isolation of this pathway occurs if any of the following conditions exists:

1. Instrument indicates measured levels above the alarm/trip setpoint.
2. Circuit failure.

(2) The CHANNEL FUNCTIONAL TEST shall also demonstrate that control room alarm annunciation occurs if any of the following conditions exists:

1. Instrument indicates measured levels above the alarm setpoint.
2. Circuit failure.
3. Instrument indicates a downscale failure.
4. Instrument controls not set in operate mode.

(3) The initial CHANNEL CALIBRATION shall be performed using National Institute of Standards and Technology traceable sources. These standards shall permit calibrating the system over the range of energy and measurement expected during normal operation and anticipated operational occurrences. For subsequent CHANNEL CALIBRATION, sources that have been related to the initial calibration or are National Institute of Standards and Technology traceable shall be used.

(4) CHANNEL CHECK shall consist of verifying indication of flow during periods of release. CHANNEL CHECK shall be made at least once per 24 hours on days on which continuous, periodic, or batch releases are made.

(5) The CHANNEL FUNCTIONAL TEST shall also demonstrate that control room alarm annunciation occurs if any of the following conditions exists:

1. Instrument indicates measured levels above the alarm setpoint.
2. Circuit failure.
3. Instrument indicates a downscale failure.

RADIOACTIVE GASEOUS EFFLUENT MONITORING INSTRUMENTATION

CONTROLS

3.3.7.12 The radioactive gaseous effluent monitoring instrumentation channels shown in Table 3.3.7.12-1 shall be FUNCTIONALLY CAPABLE with their alarm/trip setpoints set to ensure that the limits of Control 3.11.2.1 are not exceeded. The alarm/trip setpoints of these channels, with the exception of the offgas monitoring system, shall be determined and adjusted in accordance with the methodology and parameters in the ODCM.

APPLICABILITY: Actions a and b: As shown in Table 3.3.7.12-1
Actions c and d: At all times

ACTION:

a. With a radioactive gaseous effluent monitoring instrumentation channel alarm/trip setpoint less conservative than required by the above Control, immediately suspend the release of radioactive gaseous effluents monitored by the affected channel, or declare the channel not FUNCTIONALLY CAPABLE, or change the setpoint so it is acceptably conservative.

b. With less than the minimum number of radioactive gaseous effluent monitoring instrumentation channels FUNCTIONALLY CAPABLE, take the ACTION shown in Table 3.3.7.12-1.

c. Restore radioactive gaseous effluent monitoring instrumentation which is not FUNCTIONALLY CAPABLE to FUNCTIONALLY CAPABLE status within 30 days and, if unsuccessful, explain why this condition was not corrected in a timely manner in the next Annual Radioactive Effluent Release Report.

d. The provisions of Controls 3.0.3 and 3.0.4 are not applicable.

SURVEILLANCE REQUIREMENTS

4.3.7.12 Each radioactive gaseous effluent monitoring instrumentation channel shall be demonstrated FUNCTIONALLY CAPABLE by performance of the CHANNEL CHECK, CHANNEL CALIBRATION, and CHANNEL FUNCTIONAL TEST operations at the frequencies shown in Table 4.3.7.12-1.

Note: Page content was last changed with ODCM Revision 15.

TABLE 3.3.7.12-1

RADIOACTIVE GASEOUS EFFLUENT MONITORING INSTRUMENTATION

Instrument	*Minimum Channels Functionally Capable*	*Applicability*	*Action*
1. REACTOR BUILDING EXHAUST PLENUM EFFLUENT MONITORING SYSTEM			
a. Low Range Noble Gas Activity Monitor - Providing Alarm	1	*	121
b. Iodine Sampler	1	*	122
c. Particulate Sampler	1	*	122
d. Sampler Flow Rate Monitor	1	*	123
2. OFFGAS MONITORING SYSTEM (At the 2.2 minute delay piping)			
a. Noble Gas Activity Monitor - Providing Alarm	1	**	126
3. STANDBY GAS TREATMENT SYSTEM			
a. Low Range Noble Gas Activity Monitor - Providing Alarm	1	#	125
b. Iodine Sampler	1	#	122
c. Particulate Sampler	1	#	122
d, Sampler Flow Rate Monitor	1	#	123
4. TURBINE BLDG. VENTILATION MONITORING SYSTEM			
a. Low Range Noble Gas Activity Monitor - Providing Alarm	1	*	121
b. Iodine Sampler	1	*	122
c. Particulate Sampler	1	*	122
d. Sampler Flow Rate Monitor	1	*	123

TABLE NOTATIONS

* At all times.
** During operation of the main condenser air ejector.
\# During operation of the standby gas treatment system.

TABLE 3.3.7.12-1 (Continued)

RADIOACTIVE GASEOUS EFFLUENT MONITORING INSTRUMENTATION

Instrument	*Minimum Channels Functionally Capable*	*Applicability*	*Action*
5. RADWASTE BUILDING VENTILATION MONITORING SYSTEM			
a. Low Range Noble Gas Activity Monitor - Providing Alarm	1	*	121
b. Iodine Sampler	1	*	122
c. Particulate Sampler	1	*	122
d. Sampler Flow Rate Monitor	1	*	123
6. ONSITE STORAGE BUILDING VENTILATION EXHAUST RADIATION MONITOR			
a. Low Range Noble Gas Activity Monitor - Providing Alarm	1	*	121
b. Iodine Sampler	1	*	122
c. Particulate Sampler	1	*	122
d. Sampler Flow Rate Monitor	1	*	123

TABLE NOTATIONS

* At all times.

TABLE 3.3.7.12-1 (Continued)

ACTION STATEMENTS

ACTION 121 - With the number of channels FUNCTIONALLY CAPABLE less than required by the Minimum Channels FUNCTIONALLY CAPABLE requirement, effluent releases via this pathway may continue provided grab samples are taken at least once per 9 hours and these samples are analyzed for gross activity within 24 hours, or, if valid monitor indication of noble gas concentration is available, that noble gas concentration readings are recorded at least once per 9 hours. Otherwise, suspend release of radioactive effluents via this pathway.

ACTION 122 - With the number of channels FUNCTIONALLY CAPABLE one less than required by the Minimum Channels FUNCTIONALLY CAPABLE requirement, effluent releases via this pathway may continue provided that within 8 hours samples are continuously collected with auxiliary sampling equipment as required in Table 4.11.2.1.2-1.

ACTION 123 - With the number of channels FUNCTIONALLY CAPABLE less than required by the Minimum Channels FUNCTIONALLY CAPABLE requirement, effluent releases via this pathway may continue provided the flow rate is estimated at least once per 9 hours. Otherwise, suspend release of radioactive effluents via this pathway.

ACTION 124 - Not used.

ACTION 125 - With the number of channels FUNCTIONALLY CAPABLE less than required by the Minimum Channels FUNCTIONALLY CAPABLE requirement, effluent releases via this pathway may continue provided grab samples are taken at least once per 9 hours and these samples are analyzed for gross activity within 24 hours, or, if valid monitor indication of noble gas concentration is available, that noble gas concentration readings are recorded at least once per 9 hours. Otherwise, suspend release of radioactive effluents via this pathway.

ACTION 126 - With the number of channels FUNCTIONALLY CAPABLE less than required by the Minimum Channels FUNCTIONALLY CAPABLE requirement, releases via this pathway to the environment may continue provided that:

a. The offgas system is not bypassed,
b. The reactor building exhaust plenum noble gas effluent (downstream) monitor is FUNCTIONALLY CABAPLE, and
c. Grab samples are taken at least once per 24 hours and these samples are analyzed for principal emitters within 24 hours with calculation of offgas radioactivity rate.

6/08

Otherwise, be in at least HOT STANDBY within 12 hours.

TABLE 4.3.7.12-1

RADIOACTIVE GASEOUS EFFLUENT MONITORING INSTRUMENTATION SURVEILLANCE REQUIREMENTS

Instrument	*Channel Check*	*Source Check*	*Channel Calibration*	*Channel Functional Test*	*Modes in Which Surveillance Required*
1. REACTOR BUILDING EXHAUST PLENUM					
a. Low Range Noble Gas Activity Monitor - Providing Alarm	D	M	R(2)	Q(1)	*
b. Iodine Sampler	W	N.A.	N.A.	N.A.	*
c. Particulate Sampler	W	N.A.	N.A.	N.A.	*
d. Sampler Flow Rate Monitor	D	N.A.	R	Q	*
2. OFFGAS MONITORING SYSTEM (At the 2.2 minute delay piping)					
a. Noble Gas Activity Monitor	D	M	R(2)	Q(1)	**
3. STANDBY GAS TREATMENT MONITORING SYSTEM					
a. Low Range Noble Gas Activity Monitor	D	M	R(2)	Q(1)	#
b. Iodine Sampler	W	N.A.	N.A.	N.A.	#
c. Particulate Sampler	W	N.A.	N.A.	N.A.	#
d. Sampler Flow Rate Monitor	D	N.A.	R	Q	#
4. TURBINE BLDG. VENTILATION MONITORING SYSTEM					
a. Low Range Noble Gas Activity Monitor	D	M	R(2)	Q(4)	*
b. Iodine Sampler	W	N.A.	N.A.	N.A.	*
c. Particulate Sampler	W	N.A.	N.A.	N.A.	*
d. Sampler Flow Rate Monitor	D	N.A.	R	Q	*

TABLE 4.3.7.12-1 (Continued)

RADIOACTIVE GASEOUS EFFLUENT MONITORING INSTRUMENTATION SURVEILLANCE REQUIREMENTS

Instrument	*Channel Check*	*Source Check*	*Channel Calibration*	*Channel Functional Test*	*Modes in Which Surveillance Required*
5. RADWASTE BUILDING VENTILATION MONITORING SYSTEM					
a. Low Range Noble Gas Activity Monitor	D	M	R(2)	Q(4)	*
b. Iodine Sampler	W	N.A.	N.A.	N.A.	*
c. Particulate Sampler	W	N.A.	N.A.	N.A.	*
d. Sampler Flow Rate Monitor	D	N.A.	R	Q	*
6. ONSITE STORAGE BUILDING VENTILATION EXHAUST RADIATION MONITOR					
a. Low Range Noble Gas Activity Monitor	D	M	R(2)	Q(1)	*
b. Iodine Sampler	W	N.A.	N.A.	N.A.	*
c. Particulate Sampler	W	N.A.	N.A.	N.A.	*
d. Sampler Flow Rate Monitor	D	N.A.	R	Q	*

TABLE 4.3.7.12-1 (Continued)

TABLE NOTATIONS

* At all times.

** During operation of the main condenser air ejector.

\# During operation of the standby gas treatment system.

(1) The CHANNEL FUNCTIONAL TEST shall also demonstrate that control room alarm annunciation occurs if any of the following conditions exists:

1. Instrument indicates measured levels above the alarm setpoint.
2. Circuit failure.
3. Instrument indicates a downscale failure.
4. Instrument controls not set in operate mode (alarm or type).

(2) The initial CHANNEL CALIBRATION shall be performed using National Institute of Standards and Technology traceable sources. These standards shall permit calibrating the system over the range of energy and measurement expected during normal operation and anticipated operational occurrences. For subsequent CHANNEL CALIBRATION, sources that have been related to the initial calibration or are National Institute of Standards and Technology traceable shall be used.

(3) Not used.

(4) The CHANNEL FUNCTIONAL TEST shall also demonstrate that automatic isolation occurs on high level and that control room alarm annunciation occurs if any of the following conditions exists:

1. Instrument indicates measured levels above the alarm setpoints.
2. Circuit failure.
3. Instrument indicates a downscale failure.
4. Instrument controls not set in the operate mode (alarm or type).

3/4.11 RADIOACTIVE EFFLUENTS

3/4.11.1 LIQUID EFFLUENTS

CONCENTRATION

CONTROLS

3.11.1.1 The concentration of radioactive material released in liquid effluents to UNRESTRICTED AREAS (see Figure 3.0-1) shall be limited to ten times the concentration values specified in 10 CFR Part 20, Appendix B, Table 2, Column 2 for radionuclides other than dissolved or entrained noble gases. For dissolved or entrained noble gases, the concentration shall be limited to 2×10^{-4} microcuries/ml total activity.

APPLICABILITY: At all times.

ACTION:

With the concentration of radioactive material released in liquid effluents to UNRESTRICTED AREAS exceeding the above limits, immediately restore the concentration to within the above limits.

SURVEILLANCE REQUIREMENTS

4.11.1.1.1 Radioactive liquid wastes shall be sampled and analyzed according to the sampling and analysis program of Table 4.11.1.1.1-1.

4.11.1.1.2 The results of the radioactivity analyses shall be used in accordance with the methodology and parameters in the ODCM to assure that the concentrations at the point of release are maintained within the limits of Control 3.11.1.1.

TABLE 4.11.1.1.1-1

RADIOACTIVE LIQUID WASTE SAMPLING AND ANALYSIS PROGRAM

Liquid Release Type	*Sampling Frequency*	*Minimum Analysis Frequency*	*Type of Activity Analysis*	*Lower Limit of Detection (LLD)[a] (uCi/ml)*
A. Batch Release[b]: Waste Sample Tanks (3)	P Each Batch	P Each Batch	Principal Gamma Emitters[c]	5×10^{-7}
			I-131	1×10^{-6}
			Dissolved and Entrained Gases (Gamma Emitters)	1×10^{-5}
	P Each Batch	M Composite[d]	H-3	1×10^{-5}
			Gross Alpha	1×10^{-7}
	P Each Batch	Q Composite[d]	Sr-89, Sr-90	5×10^{-8}
			Fe-55	1×10^{-6}
B. Continuous Releases[e] Circulating Water System (if contaminated)	W[f] Grab Sample	M[f] Composite[d]	Principal Gamma Emitters[c]	5×10^{-7}
			I-131	1×10^{-6}
			Dissolved and Entrained Gases (Gamma Emitters)	1×10^{-5}
			H-3	1×10^{-5}
			Gross Alpha	1×10^{-7}
	NA	Q Composite[d]	Sr-89, Sr-90	5×10^{-8}
			Fe-55	1×10^{-6}

TABLE 4.11.1.1.1-1 (Continued)

TABLE NOTATION

[a]The LLD is defined, for purposes of these controls, as the smallest concentration of radioactive material in a sample that will yield a net count, above system background, that will be detected with 95% probability with only 5% probability of falsely concluding that a blank observation represents a "real" signal.

For a particular measurement system, which may include radiochemical separation:

$$LLD = \frac{4.66 \cdot s_b}{E \cdot V \cdot 2.22 \times 10^6 \cdot Y \cdot \exp(-\lambda t)}$$

Where:

LLD is the "a priori" lower limit of detection as defined above, as microcuries per unit mass or volume,

s_b is the standard deviation of the background counting rate or of the counting rate of a blank sample as appropriate, as counts per minute,

E is the counting efficiency, as counts per disintegration,

V is the sample size in units of mass or volume,

2.22×10^6 is the number of disintegrations per minute per microcurie,

Y is the fractional radiochemical yield, when applicable,

λ is the radioactive decay constant for the particular radionuclide, and

t for plant effluents is the elapsed time between the midpoint of sample collection and time of counting.

Typical values of E, V, Y, and t should be used in the calculation.

It should be recognized that the LLD is defined as an a priori (before the fact) limit representing the capability of a measurement system and not as an a posteriori (after the fact) limit for a particular measurement.

[b]A batch release is the discharge of liquid wastes of a discrete volume.
Prior to sampling for analyses, each batch shall be isolated, and then thoroughly mixed by a method described in the ODCM to assure representative sampling. Batch liquid discharge may be made from only one tank at a time.

TABLE 4.11.1.1.1-1 (Continued)

TABLE NOTATION

[c]The principal gamma emitters for which the LLD specification applies exclusively are: Mn-54, Fe-59, Co-58, Co-60, Zn-65, Mo-99, Cs-134, Cs-137, Ce-141, and Ce-144. This does not mean that only these nuclides are to be considered. Other peaks that are identifiable, together with those of the above nuclides, shall also be analyzed and reported in the Annual Radioactive Effluent Release Report pursuant to Control 5.9.1.8.

[d]This type of composite sample is a sample composed of aliquots of pre-release samples or grab samples taken during releases, or of aliquots of composite samples so prepared, so as to represent releases taking place over a longer period of time. The volumes of these aliquots should be proportional to the volumes of the releases which they represent.

[e]A continuous release is the discharge of liquid wastes of a nondiscrete volume; e.g., from a volume of a system that has an input flow during the continuous release.

[f]When the circulating water system is first discovered to be contaminated, grab samples may be taken more frequently, and may be analyzed immediately. After the source of the contamination is discovered and isolated, and contamination levels are not increasing, this grab sampling and analysis frequency may be reduced to the schedule specified in the table.

LIQUID EFFLUENTS DOSE

CONTROLS

3.11.1.2 The dose or dose commitment to a MEMBER OF THE PUBLIC from radioactive materials in liquid effluents released, from each reactor unit, to UNRESTRICTED AREAS (see Figure 3.0-1) shall be limited:

a. During any calendar quarter to less than or equal to 1.5 mrems to the total body and to less than or equal to 5 mrems to any organ, and

b. During any calendar year to less than or equal to 3 mrems to the total body and to less than or equal to 10 mrems to any organ.

APPLICABILITY: At all times.

ACTION:

a. With the calculated dose from the release of radioactive materials in liquid effluents exceeding any of the above limits, prepare and submit to the Commission within 30 days, pursuant to 10 CFR 50.4, a Special Report that identifies the cause(s) for exceeding the limit(s) and defines the corrective actions that have been taken to reduce the releases and the proposed corrective actions to be taken to assure that subsequent releases will be in compliance with the above limits. This Special Report shall also include (1) the results of radiological analyses of the drinking water source and (2) the radiological impact on finished drinking water supplies with regard to the requirements of 40 CFR Part 141, Safe Drinking Water Act.*

b. The provisions of Controls 3.0.3 and 3.0.4 are not applicable.

SURVEILLANCE REQUIREMENTS

4.11.1.2 Cumulative dose contributions from liquid effluents for the current calendar quarter and the current calendar year shall be determined in accordance with the methodology and parameters in the ODCM at least once per 31 days.

*Applicable only if drinking water supply is taken from the receiving water body within 3 miles of the plant discharge.

LIQUID WASTE TREATMENT

CONTROLS

3.11.1.3 The liquid radwaste treatment system shall be FUNCTIONALLY CAPABLE and appropriate portions of the system shall be used to reduce the radioactive materials in liquid wastes prior to their discharge when the projected doses due to the liquid effluent, from each reactor unit, to UNRESTRICTED AREAS (see Figure 3.0-1) would exceed 0.06 mrem to the total body or 0.2 mrem to any organ in any 31-day period.

APPLICABILITY: At all times.

ACTION:

a. With radioactive liquid waste being discharged and in excess of the above limits and any portion of the liquid radwaste treatment system not in operation, prepare and submit to the Commission within 30 days, pursuant to 10 CFR 50.4, a Special Report that includes the following information:

   1. Explanation of why liquid radwaste was being discharged without complete treatment, identification of any equipment or subsystems which are not FUNCTIONALLY CAPABLE, and the reason for the not FUNCTIONALLY CAPABLE status.

   2. Action(s) taken to restore the equipment which is not FUNCTIONALLY CAPABLE to FUNCTIONALLY CAPABLE status, and

   3. Summary description of action(s) taken to prevent a recurrence.

b. The provisions of Controls 3.0.3 and 3.0.4 are not applicable.

SURVEILLANCE REQUIREMENTS

4.11.1.3.1 Doses due to liquid releases from each reactor unit to UNRESTRICTED AREAS shall be projected at least once per 31 days in accordance with the methodology and parameters in the ODCM.

4.11.1.3.2 The installed liquid radwaste treatment system shall be demonstrated FUNCTIONALLY CAPABLE by meeting Controls 3.11.1.1 and 3.11.1.2.

RADIOACTIVE EFFLUENTS

3/4.11.2 GASEOUS EFFLUENTS

DOSE RATE

CONTROLS

3.11.2.1 The dose rate due to radioactive materials released in gaseous effluents from the site to areas at and beyond the SITE BOUNDARY (see Figure 3.0-1) shall be limited to the following:

a. For noble gases: Less than or equal to 500 mrems/yr to the total body and less than or equal to 3000 mrems/yr to the skin, and

b. For iodine-131, iodine-133, tritium, and for all radionuclides in particulate form with half-lives greater than 8 days: Less than or equal to 1500 mrems/yr to any organ.

APPLICABILITY: At all times.

ACTION:

With the dose rate(s) exceeding the above limits, immediately restore the release rate to within the above limit(s).

SURVEILLANCE REQUIREMENTS

4.11.2.1.1 The dose rate due to noble gases in gaseous effluents shall be determined to be within the above limits in accordance with the methodology and parameters in the ODCM.

4.11.2.1.2 The dose rate due to iodine-131, iodine-133, tritium, and all other radionuclides in particulate form with half-lives greater than 8 days in gaseous effluents shall be determined to be within the above limits in accordance with the methodology and parameters in the ODCM by obtaining representative samples and performing analyses in accordance with the sampling and analysis program specified in Table 4.11.2.1.2-1.

TABLE 4.11.2.1.2-1

RADIOACTIVE GASEOUS WASTE SAMPLING AND ANALYSIS PROGRAM

Gaseous Release Type	Sampling Frequency	Minimum Analysis Frequency	Type of Activity Analysis	Lower Limit of Detection (LLD)[a] (uCi/ml)
A. Containment PURGE (Pre Treatment)	P[i], S[j] Each PURGE Grab Sample	P[i], S[j] Each PURGE P[i]	Principal Gamma Emitters[b] H-3	1×10^{-4} 1×10^{-6}
B. Reactor Building Exhaust Plenum Standby Gas Treatment System[h]	M[c,e] Grab Sample	M[c] M[c]	Principal Gamma Emitters[b] H-3	1×10^{-4} 1×10^{-6}
C. Radwaste Building Turbine Building On-Site Storage Facility	M Grab Sample	M M	Principal Gamma Emitters[b] H-3	1×10^{-4} 1×10^{-6}
D. All Release Types as listed in B and C above.	Continuous[f]	W[g] Absorbent Sample	I-131 I-133	1×10^{-12} 1×10^{-10}
	Continuous[f]	W[g] Particulate Sample	Principal Gamma Emitters[b] (I-131, others) Gross Alpha	1×10^{-11}
	Continuous[f]	Q Composite Particulate Sample	Sr-89, Sr-90	1×10^{-11}
	Continuous[f]	Noble Gas Monitor	Noble Gas Gross Beta or Gamma	1×10^{-6}
E. Offgas Vent Pipe	N.A.[k] Grab Sample	N.A.[k]	Principal Gamma Emitters[b]	1×10^{-4}

TABLE 4.11.2.1.2-1 (Continued)

TABLE NOTATION

[a]The LLD is defined, for purposes of these controls, as the smallest concentration of radioactive material in a sample that will yield a net count, above system background, that will be detected with 95% probability with only 5% probability of falsely concluding that a blank observation represents a "real" signal.

For a particular measurement system, which may include radiochemical separation:

$$LLD = \frac{4.66 \cdot s_b}{E \cdot V \cdot 2.22 \times 10^6 \cdot Y \cdot \exp(-\lambda t)}$$

Where:

LLD is the "a priori" lower limit of detection as defined above, as microcuries per unit mass or volume,

s_b is the standard deviation of the background counting rate or of the counting rate of a blank sample as appropriate, as counts per minute,

E is the counting efficiency, as counts per disintegration,

V is the sample size in units of mass or volume,

2.22×10^6 is the number of disintegrations per minute per microcurie,

Y is the fractional radiochemical yield, when applicable,

λ is the radioactive decay constant for the particular radionuclide, and

t for plant effluents is the elapsed time between the midpoint of sample collection and time of counting.

Typical values of E, V, Y, and t should be used in the calculation.

It should be recognized that the LLD is defined as an a priori (before the fact) limit representing the capability of a measurement system and not as an a posteriori (after the fact) limit for a particular measurement.

[b]The principal gamma emitters for which the LLD specification applies exclusively are the following radionuclides: Kr-87, Kr-88, Xe-133, Xe-133m, Xe-135, and Xe-138 in noble gas releases and Mn-54, Fe-59, Co-58, Co-60, Zn-65, Mo-99, I-131, Cs-134, Cs-137, Ce-141, and Ce-144 in iodine and particulate releases. This list does not mean that only these nuclides are to be considered. Other gamma peaks that are identifiable, together with those of the above nuclides, shall also be analyzed and reported in the Annual Radioactive Effluent Release Report pursuant to Control 5.9.1.8.

TABLE 4.11.2.1.2-1 (Continued)

TABLE NOTATION

[c]Sampling and analysis shall also be performed following shutdown, startup, or a THERMAL POWER change exceeding 15% of RATED THERMAL POWER within a 1-hour period. This requirement does not apply if the noble gas monitor shows that effluent activity has not increased more than a factor of 3.

[d]Not used.

[e]Tritium grab samples shall be taken at least once per 7 days from the ventilation exhaust from the spent fuel pool area, whenever spent fuel is in the spent fuel pool.

[f]The ratio of the sample flow rate to the sampled stream flow rate shall be known for the time period covered by each dose or dose rate calculation made in accordance with Controls 3.11.2.1, 3.11.2.2, and 3.11.2.3.

[g]Samples shall be changed at least once per 7 days and analyses shall be completed within 48 hours after changing, or after removal from sampler. Sampling shall also be performed at least once per 24 hours for at least 3 days following each shutdown, startup or THERMAL POWER change exceeding 15% of RATED THERMAL POWER in 1 hour, and analyses shall be completed within 48 hours of changing, at any release point at which the noble gas monitor shows that effluent activity has increased more than a factor of 3.

When samples collected for 24 hours are analyzed, the corresponding LLDs may be increased by a factor of 10. When samples collected for periods between 24 hours and 7 days are analyzed, the corresponding LLDs may be increased by a factor equal to the normal weekly sample volume divided by the volume of the sample in question.

[h]Required when the SGTS is in operation.

[i]In MODES 1, 2, 3, and 4, the applicable portion of primary containment shall be sampled and analyzed within 8 hours prior to the start of any PURGING.

[j]In MODES 1, 2, 3, and 4, when the primary containment atmosphere radiation monitoring system is declared not FUNCTIONALLY CAPABLE or is in alarm condition, the applicable portion of primary containment shall be sampled and analyzed within 8 hours prior to the start of any VENTING or PURGING and at least once per 12 hours during VENTING or PURGING through other than SGTS.

[k]Offgas Vent Pipe sampling is performed as directed by Radiation Protection to supplement Reactor Building Exhaust Plenum monthly grab sampling. The Offgas Vent Pipe sample point is upstream of the Reactor Building Exhaust Plenum.

RADIOACTIVE EFFLUENTS

GASEOUS EFFLUENTS DOSE - NOBLE GASES

CONTROLS

3.11.2.2 The air dose due to noble gases released in gaseous effluents, from each reactor unit, to areas at and beyond the SITE BOUNDARY (see Figure 3.0-1) shall be limited to the following:

a. During any calendar quarter: Less than or equal to 5 mrads for gamma radiation and less than or equal to 10 mrads for beta radiation and,

b. During any calendar year: Less than or equal to 10 mrads for gamma radiation and less than or equal to 20 mrads for beta radiation.

APPLICABILITY: At all times.

ACTION:

With the calculated air dose from radioactive noble gases in gaseous effluents exceeding any of the above limits, prepare and submit to the Commission within 30 days, pursuant to 10 CFR 50.4, a Special Report that identifies the corrective actions that have been taken to reduce the releases and the proposed corrective actions to be taken to assure that subsequent releases will be in compliance with the above limits.

b. The provisions of Controls 3.0.3 and 3.0.4 are not applicable.

SURVEILLANCE REQUIREMENTS

4.11.2.2 Cumulative dose contributions for the current calendar quarter and current calendar year for noble gases shall be determined in accordance with the methodology and parameters in the ODCM at least once per 31 days.

RADIOACTIVE EFFLUENTS

GASEOUS EFFLUENTS

DOSE - IODINE-131, IODINE-133, TRITIUM, AND RADIONUCLIDES IN PARTICULATE FORM

CONTROLS

3.11.2.3 The dose to a MEMBER OF THE PUBLIC from iodine-131, iodine-133, tritium, and all radionuclides in particulate form with half-lives greater than 8 days in gaseous effluents released, from each reactor unit, to areas at and beyond the SITE BOUNDARY (see Figure 3.0-1) shall be limited to the following:

a. During any calendar quarter: Less than or equal to 7.5 mrems to any organ and,

b. During any calendar year: Less than or equal to 15 mrems to any organ.

APPLICABILITY: At all times.

ACTION:

a. With the calculated dose from the release of iodine-131, iodine-133, tritium, and radionuclides in particulate form with half-lives greater than 8 days, in gaseous effluents exceeding any of the above limits, prepare and submit to the Commission within 30 days, pursuant to 10 CFR 50.4, a Special Report that identifies the cause(s) for exceeding the limit and defines the corrective actions that have been taken to reduce the releases and the proposed corrective actions to be taken to assure that subsequent releases will be in compliance with the above limits.

b. The provisions of Controls 3.0.3 and 3.0.4 are not applicable.

SURVEILLANCE REQUIREMENTS

4.11.2.3 Cumulative dose contributions for the current calendar quarter and current calendar year for iodine-131, iodine-133, tritium, and radionuclides in particulate form with half-lives greater than 8 days shall be determined in accordance with the methodology and parameters in the ODCM at least once per 31 days.

OFF-GAS TREATMENT SYSTEM

CONTROLS

3.11.2.4 The OFF-GAS TREATMENT SYSTEM shall be FUNCTIONALLY CAPABLE and shall be in operation.

APPLICABILITY: Whenever the main condenser steam jet air ejectors are in operation.

ACTION:

With the OFF-GAS TREATMENT SYSTEM not FUNCTIONALLY CAPABLE for more than 7 days, prepare and submit to the commission within 30 days, pursuant to 10 CFR 50.4, a Special Report that includes the following information:

1. Identification of the equipment or subsystems which are not FUNCTIONALLY CAPABLE and the reason for the not FUNCTIONALLY CAPABLE status,

2. Action(s) taken to restore the equipment which is not FUNCTIONALLY CAPABLE to FUNCTIONALLY CAPABLE status, and

3. Summary description of action(s) taken to prevent a recurrence.

b. The provisions of Controls 3.0.3 and 3.0.4 are not applicable.

c. The provisions of Control 4.0.4 are not applicable.

SURVEILLANCE REQUIREMENTS

4.11.2.4 The OFF-GAS TREATMENT SYSTEM shall be demonstrated FUNCTIONALLY CAPABLE by meeting Controls 3.11.2.1, 3.11.2.2, and 3.11.2.3.

VENTILATION EXHAUST TREATMENT SYSTEM

CONTROLS

3.11.2.5 The VENTILATION EXHAUST TREATMENT SYSTEM as described in the ODCM shall be FUNCTIONALLY CAPABLE and appropriate portions of the system shall be used to reduce radioactive materials in gaseous waste prior to their discharge when the projected doses due to gaseous effluent releases from the site to UNRESTRICTED AREAS (see Figure 3.0-1) would exceed 0.3 mrem to any organ in any 31-day period.

APPLICABILITY: At all times.

ACTION:

With radioactive gaseous waste being discharged in excess of the above limits and any portion of the VENTILATION EXHAUST TREATMENT SYSTEM not in operation, prepare and submit to the Commission within 30 days, pursuant to 10 CFR 50.4, a Special Report that includes the following information:

1. Identification of any equipment or subsystems which are not FUNCTIONALLY CAPABLE and the reason for the not FUNCTIONALLY CAPABLE status.

2. Action(s) taken to restore the equipment which is not FUNCTIONALLY CAPABLE to FUNCTIONALLY CAPABLE status, and

3. Summary description of action(s) taken to prevent a recurrence.

b. The provisions of Controls 3.0.3 and 3.0.4 are not applicable.

SURVEILLANCE REQUIREMENTS

4.11.2.5.1 Doses due to gaseous releases from the site shall be projected at least once per 31 days in accordance with the methodology and parameters in the ODCM, when any portion of the VENTILATION EXHAUST TREATMENT SYSTEM is not in use.

4.11.2.5.2 The VENTILATION EXHAUST TREATMENT SYSTEM shall be demonstrated FUNCTIONALLY CAPABLE by meeting Controls 3.11.2.1, 3.11.2.2, and 3.11.2.3.

VENTING OR PURGING

CONTROLS

3.11.2.8 VENTING or PURGING of the primary containment shall be through the standby gas treatment system or the reactor building ventilation system.

APPLICABILITY: MODES 1, 2, 3, and 4

ACTION:

a. With the requirements of the above control not satisfied, suspend all VENTING or PURGING of the primary containment.
b. The provision of Controls 3.0.3 and 3.0.4 are not applicable.

SURVEILLANCE REQUIREMENTS

4.11.2.8.1 The applicable portion of primary containment shall be sampled and analyzed per Table 4.11.2.1.2-1 of Control 3.11.2.1 within 8 hours prior to the start of any PURGING.

4.11.2.8.2 If the primary containment radiation monitoring system is not FUNCTIONALLY CAPABLE or is in alarm condition, the applicable portion of primary containment shall be sampled and analyzed per Table 4.11.2.1.2-1 of Control 3.11.2.1 within 8 hours prior to the start of and at least once per 12 hours during VENTING or PURGING of primary containment through other than the standby gas treatment system.

4.11.2.8.3 The primary containment shall be determined to be aligned for VENTING or PURGING through the standby gas treatment system or the reactor building ventilation system within 4 hours prior to start of and at least once per 12 hours during VENTING or PURGING of the containment.

4.11.2.8.4 Prior to use of the vent/purge system through the standby gas treatment system assure that:

a. Both standby gas treatment system trains are FUNCTIONALLY CAPABLE whenever the vent/purge system is in use, and
b. Whenever the vent/purge system is in use during MODE 1 or 2 or 3, only one of the standby gas treatment system trains may be used.

4.11.2.8.5 Prior to VENTING or PURGING, assure that at least one of the following monitors is FUNCTIONALLY CAPABLE: the primary containment atmosphere radiation monitor, the reactor building ventilation exhaust radiation monitor (at least one division), or the SPING monitor corresponding to the release path (the reactor building exhaust plenum radiation monitor or the standby gas treatment system radiation monitor, Division 1 or 2).

3/4.11.4 TOTAL DOSE

CONTROLS

3.11.4 The annual (calendar year) dose or dose commitment to any member of the public (as defined in 40 CFR Part 190) due to releases of radioactivity and to radiation from uranium fuel cycle sources shall be limited to less than or equal to 25 mrems to the total body or any organ, except the thyroid, which shall be limited to less than or equal to 75 mrems.

APPLICABILITY: At all times.
ACTION:

a. With the calculated doses from the release of radioactive materials in liquid or gaseous effluents exceeding twice the limits of Controls 3.11.1.2a., 3.11.1.2b., 3.11.2.2a., 3.11.2.2b., 3.11.2.3a., or 3.11.2.3b., calculations should be made including direct radiation contributions from the reactor units and from outside storage tanks to determine whether the above limits of Control 3.11.4 have been exceeded. If such is the case, prepare and submit to the Commission within 30 days, pursuant to 10 CFR 50.4, a Special Report that defines the corrective action to be taken to reduce subsequent releases to prevent recurrence of exceeding the above limits and includes the schedule for achieving conformance with the above limits. This Special Report, as defined in 10 CFR 20.2203, shall include an analysis that estimates the radiation exposure (dose) to a member of the public from uranium fuel cycle sources, including all effluent pathways and direct radiation, for the calendar year that includes the release(s) covered by this report. It shall also describe levels of radiation and concentrations of radioactive material involved, and the cause of the exposure levels or concentrations. If the estimated dose(s) exceeds the above limits, and if the release condition resulting in violation of 40 CFR Part 190 has not already been corrected, the Special Report shall include a request for a variance in accordance with the provisions of 40 CFR Part 190. Submittal of the report is considered a timely request, and a variance is granted until staff action on the request is complete.

b. The provisions of Controls 3.0.3 and 3.0.4 are not applicable.

SURVEILLANCE REQUIREMENTS

4.11.4.1 Cumulative dose contributions from liquid and gaseous effluents shall be determined in accordance with Controls 4.11.1.2, 4.11.2.2, and 4.11.2.3, and in accordance with the methodology and parameters in the ODCM.

4.11.4.2 Cumulative dose contributions from direct radiation from the reactor units and from outside storage tanks shall be determined in accordance with the methodology and parameters in the ODCM. This requirement is applicable only under conditions set forth in Control 3.11.4, ACTION a.

Note: Page content was last changed with ODCM Revision 16.

3/4.12 RADIOLOGICAL ENVIRONMENTAL MONITORING

3/4.12.1 MONITORING PROGRAM

CONTROLS

3.12.1 The radiological environmental monitoring program shall be conducted as specified in Table 3.12.1-1.

APPLICABILITY: At all times.

ACTION:

a. With the radiological environmental monitoring program not being conducted as specified in Table 3.12.1-1, prepare and submit to the Commission, in the Annual Radiological Environmental Operating Report required by Control 5.9.1.7, a description of the reasons for not conducting the program as required and the plans for preventing a recurrence.

With the level of radioactivity as the result of plant effluents in an environmental sampling medium at a specified location exceeding the reporting levels of Table 3.12.1-2 when averaged over any calendar quarter, prepare and submit to the Commission within 30 days, pursuant to 10 CFR 50.4, a Special Report that identifies the cause(s) for exceeding the limit(s) and defines the corrective actions to be taken to reduce radioactive effluents so that the potential annual dose* to A MEMBER OF THE PUBLIC is less than the calendar year limits of Controls 3.11.1.2, 3.11.2.2, and 3.11.2.3. When more than one of the radionuclides in Table 3.12.1-2 are detected in the sampling medium, this report shall be submitted if:

$$\frac{\text{concentration (1)}}{\text{reporting level (1)}} + \frac{\text{concentration (2)}}{\text{reporting level (2)}} + \ldots \geq 1.0$$

b. When radionuclides other than those in Table 3.12.1-2 are detected and are the result of plant effluents, this report shall be submitted if the potential annual dose* to A MEMBER OF THE PUBLIC from all radionuclides is equal to or greater than the calendar year limits of Controls 3.11.1.2, 3.11.2.2, and 3.11.2.3. This report is not required if the measured level of radioactivity was not the result of plant effluents; however, in such an event, the condition shall be reported and described in the Annual Radiological Environmental Operating Report pursuant to Control 5.9.1.7.

*The methodology used to estimate the potential annual dose to a MEMBER OF THE PUBLIC shall be indicated in this report.

Note: Page content was last changed with ODCM Revision 16.

CONTROLS (Continued)

c. With milk or fresh leafy vegetable samples unavailable from one or more of the sample locations required by Table 3.12.1-1, identify specific locations for obtaining replacement samples and add them to the radiological environmental monitoring program within 30 days. The specific locations from which samples were unavailable may then be deleted from the monitoring program. Pursuant to Control 5.9.1.8, identify the cause of the unavailability of samples and identify the new location(s) for obtaining replacement samples in the next Annual Radioactive Effluent Release Report pursuant to Control 5.9.1.8 and also include in the report a revised table for the ODCM reflecting the new location(s).

d. The provisions of Controls 3.0.3 and 3.0.4 are not applicable.

SURVEILLANCE REQUIREMENTS

4.12.1 The radiological environmental monitoring samples shall be collected pursuant to Table 3.12.1-1 from the specific locations given in the table in the ODCM, and shall be analyzed pursuant to the requirements of Table 3.12.1-1 and the detection capabilities required by Table 4.12.1-1.

TABLE 3.12.1-1

RADIOLOGICAL ENVIRONMENTAL MONITORING PROGRAM

Exposure Pathway and/or Sample	Number of Representative Samples and Sample Locations[a]	Sampling and Collection Frequency	Type and Frequency of Analysis
1. DIRECT RADIATION[b]	67 routine monitoring stations, with two or more dosimeters placed as follows: 1) an inner ring of stations in the general area of the SITE BOUNDARY and additional rings at approximately 2, 5, and 10 miles, with a station in at least every other meteorological sector for each ring with the exception of those sectors over Lake Erie. The balance of the stations, 8, should be placed in special interest areas such as population centers, nearby residences, schools, and in 2 or 3 areas to serve as control stations.	Quarterly	Gamma dose quarterly.
2. AIRBORNE Radioiodine and Particulates	Samples from 5 locations. a. 3 samples from close to the 3 SITE BOUNDARY locations, in different sectors, of the highest calculated annual average ground level X/Q. b. 1 sample from the vicinity of a community having the highest calculated annual average ground level X/Q. c. 1 sample from a control location, as for example 15-30 km distant and in the least prevalent wind direction[c].	Continuous sampler operation with sample collection weekly, or more frequently if required by dust loading.	Radioiodine Canister: I-131 analysis weekly. Particulate Sampler: Gross beta radioactivity analysis following filter change:[d] Gamma isotopic analysis[e] of composite (by location) quarterly.

Note: Page content was last changed with ODCM Revision 15.

TABLE 3.12.1-1 (Continued)

RADIOLOGICAL ENVIRONMENTAL MONITORING PROGRAM

Exposure Pathway and/or Sample	*Number of Representative Samples and Sample Locations*[a]	*Sampling and Collection Frequency*	*Type and Frequency of Analysis*
3. WATERBORNE			
a. Surface[f]	a. 1 sample upstream. b. 1 sample downstream.	Composite sample over 1-month period[g]	Gamma isotopic analysis[e] monthly. Composite for tritium analysis quarterly.
b. Ground	Samples from 1 or 2 sources only if likely to be affected[h].	Quarterly	Gamma isotopic[e] and tritium analysis quarterly.
c. Drinking	a. 1 sample of each of 1 to 3 of the nearest water supplies that could be affected by its discharge. b. 1 sample from a control location.	Composite sample over 2-week period[g] when I-131 analysis is performed, monthly composite otherwise.	I-131 analysis on each composite when the dose calculated for the consumption of the water is greater than 1 mrem per year.[i] Composite for gross beta and gamma isotopic analyses[e] monthly. Composite for tritium analysis quarterly.
d. Sediment from shoreline	1 sample from downstream area with existing or potential recreational value.	Semiannually	Gamma isotopic analysis[e] semiannually.

TABLE 3.12.1-1 (Continued)

RADIOLOGICAL ENVIRONMENTAL MONITORING PROGRAM

Exposure Pathway and/or Sample	Number of Representative Samples and Sample Locations[a]	Sampling and Collection Frequency	Type and Frequency of Analysis
4. INGESTION a. Milk	a. Samples from milking animals in 3 locations within 5 km distance having the highest dose potential. If there are none, then, 1 sample from milking animals in each of 3 areas between 5 to 8 km distant where doses are calculated to be greater than 1 mrem per yr[i].	Semimonthly when animals are on pasture, monthly at other times.	Gamma isotopic[e] and I-131 analysis semimonthly when animals are on pasture; monthly at other times.
	b. 1 sample from milking animals at a control location 15-30 km distant and in the least prevalent wind direction.		
b. Fish and Invertebrates	a. 1 sample of each commercially and recreationally important species in vicinity of plant discharge area.	Sample in season, or semiannually if they are not seasonal.	Gamma isotopic analysis[e] on edible portions.
	b. 1 sample of same species in areas not influenced by plant discharge.		
c. Food Products	a. 1 sample of each principal class of food products from any area that is irrigated by water in which liquid plant wastes have been discharged.	At time of harvest[j].	Gamma isotopic analyses[e] on edible portions.
	b. Samples of 3 different kinds of broad leaf vegetation grown nearest each of two different offsite locations of highest predicted annual average level D/Q if locations are available and milk sampling is not performed.	Monthly when available.	Gamma isotopic[e] and I-131 analysis.
	c. 1 sample of each of the similar broad leaf vegetation grown 15-30 km distant in the least prevalent wind direction if milk sampling is not performed.	Monthly when available.	Gamma isotopic[e] and I-131 analysis.

Note: Page content was last changed with ODCM Revision 16.

TABLE 3.12.1-1 (Continued)

TABLE NOTATIONS

[a]Specific parameters of distance and direction sector from the centerline of one reactor, and additional description where pertinent, shall be provided for each and every sample location in Table 3.12.1-1 in a table in the ODCM. Refer to NUREG-0133, "Preparation of Radiological Effluent Technical Specifications for Nuclear Power Plants," October 1978, and to Radiological Assessment Branch Technical Position, Revision 1, November 1979. Deviations are permitted from the required sampling schedule if specimens are unobtainable due to hazardous conditions, seasonal unavailability, malfunction of automatic sampling equipment and other legitimate reasons. If specimens are unobtainable due to sampling equipment malfunction, every effort shall be made to complete corrective action prior to the end of the next sampling period. All deviations from the sampling schedule shall be documented in the Annual Radiological Environmental Operating Report pursuant to Control 5.9.1.7. It is recognized that, at times, it may not be possible or practicable to continue to obtain samples of the media of choice at the most desired location or time. In these instances suitable specific alternative media and locations may be chosen for the particular pathway in question and appropriate substitutions made within 30 days in the radiological environmental monitoring program. Pursuant to Control 5.9.1.8, identify the cause of the unavailability of samples for that pathway and identify the new location(s) for obtaining replacement samples in the next Annual Radioactive Effluent Release Report and also include in the report a revised table for the ODCM reflecting the new location(s).

[b]One or more instruments, such as a pressurized ion chamber, for measuring and recording dose rate continuously may be used in place of, or in addition to, integrating dosimeters. For the purpose of this table, a thermoluminescent dosimeter (TLD) is considered to be one phosphor; two or more phosphors in a packet are considered as two or more dosimeters. Film badges shall not be used as dosimeters for measuring direct radiation. The frequency of analysis or readout for TLD systems will depend upon the characteristics of the specific system used and should be selected to obtain optimum dose information with minimal fading.

[c]The purpose of this sample is to obtain background information. If it is not practical to establish control locations in accordance with the distance and wind direction criteria, other sites that have valid background data may be substituted.

[d]Airborne particulate sample filters shall be analyzed for gross beta radioactivity 24 hours or more after sampling to allow for radon and thoron daughter decay. If gross beta activity in air particulate samples is greater than 10 times the yearly mean of control samples, gamma isotopic analysis shall be performed on the individual samples.

[e]Gamma isotopic analysis means the identification and quantification of gamma-emitting radionuclides that may be attributable to the effluents from the facility.

TABLE 3.12.1-1 (Continued)

TABLE NOTATION

[f]The "upstream sample" shall be taken at a distance beyond significant influence of the discharge. The "downstream" sample shall be taken in an area beyond but near the mixing zone. "Upstream" samples in an estuary must be taken far enough upstream to be beyond the plant influence.

[g]Composite samples should be collected with equipment (or equivalent) which is capable of collecting an aliquot at time intervals that are very short (e.g., hourly) relative to the compositing period (e.g., monthly).

[h]Groundwater samples shall be taken when this source is tapped for drinking or irrigation purposes in areas where the hydraulic gradient or recharge properties are suitable for contamination.

[i]The dose shall be calculated for the maximum organ and age group, using the methodology and parameters in the ODCM.

[j]If harvest occurs more than once a year, sampling shall be performed during each discrete harvest. If harvest occurs continuously, sampling shall be monthly. Attention shall be paid to including samples of tuberous and root food products.

TABLE 3.12.1-2

REPORTING LEVELS FOR RADIOACTIVITY CONCENTRATIONS IN ENVIRONMENTAL SAMPLES

Reporting Levels

Analysis	*Water (pCi/l)*	*Airborne Particulate or Gases (pCi/m^3)*	*Fish (pCi/kg, wet)*	*Milk (pCi/l)*	*Food Products (pCi/kg, wet)*
H-3	20,000*				
Mn-54	1,000		30,000		
Fe-59	400		10,000		
Co-58	1,000		30,000		
Co-60	300		10,000		
Zn-65	300		20,000		
Zr-Nb-95	400				
I-131	2	0.9		3	100
Cs-134	30	10	1,000	60	1,000
Cs-137	50	20	2,000	70	2,000
Ba-La-140	200			300	

* For drinking water samples. This is 40 CFR Part 141 value.

TABLE 4.12.1-1

DETECTION CAPABILITIES FOR ENVIRONMENTAL SAMPLE ANALYSIS [a]

LOWER LIMIT OF DETECTION (LLD)[b,c]

Analysis	*Water (pCi/l)*	*Airborne Particulate or Gases (pCi/m^3)*	*Fish (pCi/kg, wet)*	*Milk (pCi/l)*	*Food Products (pCi/kg, wet)*	*Sediment (pCi/kg, dry)*
gross beta	4	0.01				
H-3	2000					
Mn-54	15		130			
Fe-59	30		260			
Co-58,60	15		130			
Zn-65	30		260			
Zr-Nb-95	15					
I-131	1[d]	0.07		1	60	
Cs-134	15	0.05	130	15	60	150
Cs-137	18	0.06	150	18	80	180
Ba-La-140	15			15		

TABLE 4.12.1-1 (Continued)

TABLE NOTATIONS

[a]This list does not mean that only these nuclides are to be considered. Other peaks that are identifiable, together with those of the above nuclides, shall also be analyzed and reported in the Annual Radiological Environmental Operating Report pursuant to Control 5.9.1.7.

[b]Required detection capabilities for thermoluminescent dosimeters used for environmental measurements are given in Regulatory Guide 4.13.

[c]The LLD is defined, for purposes of these Controls, as the smallest concentration of radioactive material in a sample that will yield a net count, above system background, that will be detected with 95% probability with only 5% probability of falsely concluding that a blank observation represents a "real" signal.

For a particular measurement system, which may include radiochemical separation:

$$LLD = \frac{4.66 \cdot s_b}{E \cdot V \cdot 2.22 \cdot Y \cdot \exp(-\lambda t)}$$

Where:

LLD is the "a priori" lower limit of detection as defined above, as picocuries per unit mass or volume,

s_b is the standard deviation of the background counting rate or of the counting rate of a blank sample as appropriate, as counts per minute,

E is the counting efficiency, as counts per disintegration,

V is the sample size in units of mass or volume,

2.22 is the number of disintegrations per minute per picocurie,

Y is the fractional radiochemical yield, when applicable,

λ is the radioactive decay constant for the particular radionuclide, and

t for environmental samples is the elapsed time between sample collection, or end of the sample collection period, and time of counting

Typical values of E, V, Y, and t should be used in the calculation.

TABLE 4.12.1-1 (Continued)

TABLE NOTATIONS

It should be recognized that the LLD is defined as an a priori (before the fact) limit representing the capability of a measurement system and not as an a posteriori (after the fact) limit for a particular measurement. Analyses shall be performed in such a manner that the stated LLDs will be achieved under routine conditions. Occasionally background fluctuations, unavoidable small sample sizes, the presence of interfering nuclides, or other uncontrollable circumstances may render these LLDs unachievable. In such cases, the contributing factors shall be identified and described in the Annual Radiological Environmental Operating Report pursuant to Control 5.9.1.7.

[d]LLD for drinking water samples.

3/4.12.2 LAND USE CENSUS

CONTROLS

3.12.2 A land use census shall be conducted and shall identify within a distance of 8 km (5 miles) the location in each of the 16 meteorological sectors of the nearest milk animal, the nearest residence and the nearest garden* of greater than 50 m^2 (500 ft^2) producing broad leaf vegetation.

APPLICABILITY: At all times.

ACTION:

a. With a land use census identifying a location(s) that yields a calculated dose or dose commitment greater than the values currently being calculated in Surveillance Requirement 4.11.2.3, identify the new location(s) in the next Annual Radioactive Effluent Release Report, pursuant to Control 5.9.1.8.

b. With a land use census identifying a location(s) that yields a calculated dose or dose commitment (via the same exposure pathway) 20% greater than at a location from which samples are currently being obtained in accordance with Control 3.12.1, add the new location(s) to the radiological environmental monitoring program within 30 days. The sampling location(s), excluding the control station location, having the lowest calculated dose or dose commitment(s), via the same exposure pathway, may be deleted from this monitoring program after October 31 of the year in which this land use census was conducted. Pursuant to Control 5.9.1.8, identify the new location(s) in the next Annual Radioactive Effluent Release Report and also include in the report a revised table for the ODCM reflecting the new location(s).

c. The provisions of Control 3.0.3 and 3.0.4 are not applicable.

SURVEILLANCE REQUIREMENTS

4.12.2 The land use census shall be conducted during the growing season at least once per 12 months using that information that will provide the best results, such as by a door-to-door survey, visual survey, aerial survey, or by consulting local agriculture authorities. The results of the land use census shall be included in the Annual Radiological Environmental Operating Report pursuant to Control 5.9.1.7.

*Broad leaf vegetation sampling of at least three different kinds of vegetation may be performed at the SITE BOUNDARY in each of two different direction sectors with the highest predicted D/Qs in lieu of the garden census. Controls for broad leaf vegetation sampling in Table 3.12.1-1, Part 4.c, shall be followed, including analysis of control samples.

3/4.12.3 INTERLABORATORY COMPARISON PROGRAM

CONTROLS

3.12.3 Analyses shall be performed on radioactive materials supplied as part of an Interlaboratory Comparison Program which is audited periodically by Fermi 2 Quality Assurance.

APPLICABILITY: At all times.

ACTION:

a. With analyses not being performed as required above, report the corrective actions taken to prevent a recurrence to the Commission in the Annual Radiological Environmental Operating Report pursuant to Control 5.9.1.7.

b. The provisions of Controls 3.0.3 and 3.0.4 are not applicable.

SURVEILLANCE REQUIREMENTS

4.12.3 The Interlaboratory Comparison Program shall be described in the ODCM. A summary of the results obtained as part of the above required Interlaboratory Comparison Program shall be included in the Annual Radiological Environmental Operating Report pursuant to Control 5.9.1.7.

Figure 3.0-1: Map Defining Unrestricted Areas and S oundary for Radioactive Gaseous and Liquid Effluents

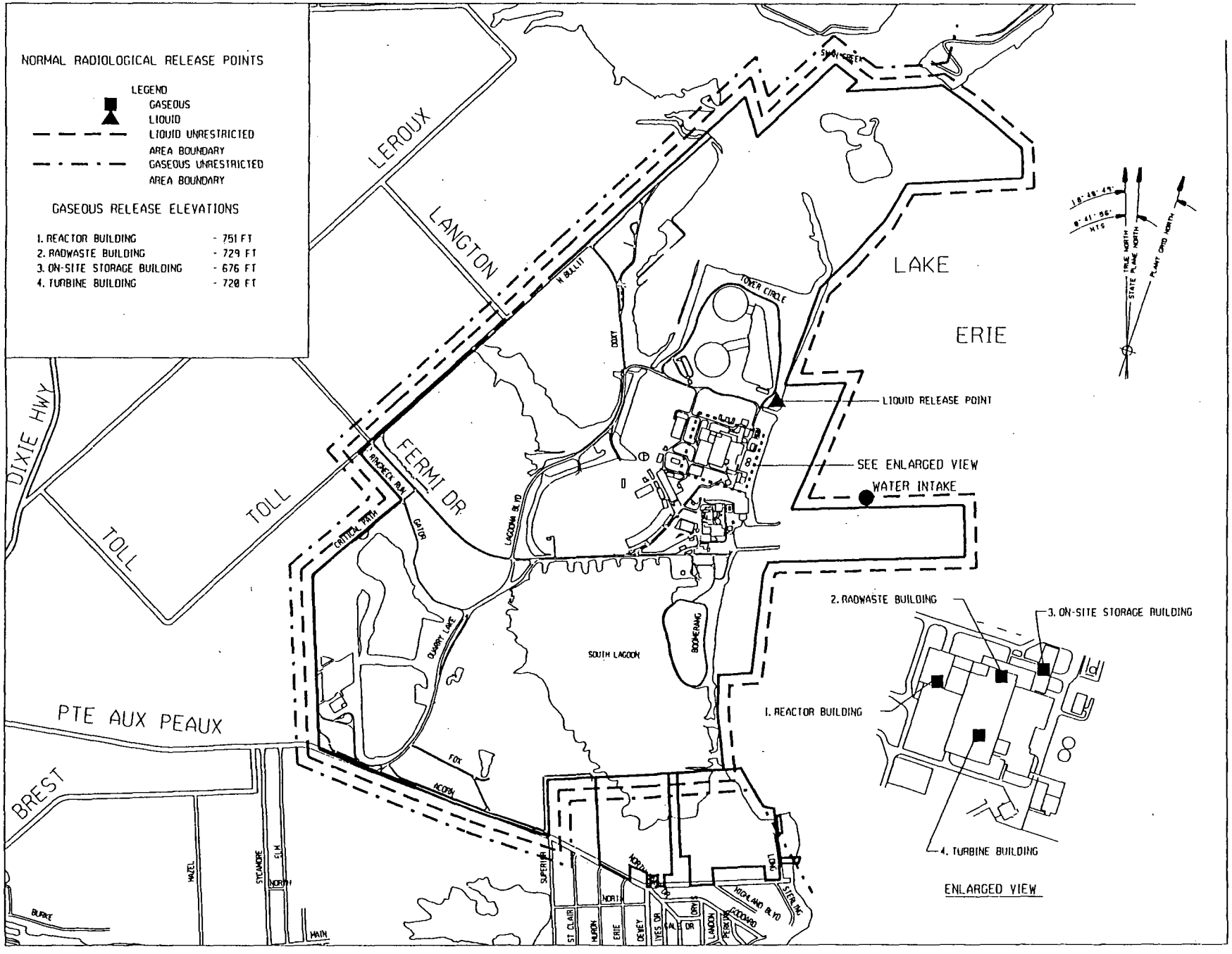

SECTION 4.0

BASES

3/4.3.7.11 RADIOACTIVE LIQUID EFFLUENT MONITORING INSTRUMENTATION

The radioactive liquid effluent monitoring instrumentation is provided to monitor and control, as applicable, the releases of radioactive materials in liquid effluents during actual or potential releases of liquid effluents. The alarm/trip setpoints for these instruments shall be calculated and adjusted in accordance with the methodology and parameters in the ODCM to ensure that the alarm/trip will occur prior to exceeding the limits of 10 CFR Part 20. The FUNCTIONAL CAPABILITY and use of this instrumentation is consistent with the requirements of General Design Criteria 60, 63, and 64 of Appendix A to 10 CFR Part 50.

3/4.3.7.12 RADIOACTIVE GASEOUS EFFLUENT MONITORING INSTRUMENTATION

The radioactive gaseous effluent monitoring instrumentation is provided to monitor and control, as applicable, the releases of radioactive materials in gaseous effluents during actual or potential releases of gaseous effluents. The alarm/trip setpoints for these instruments shall be calculated and adjusted in accordance with the methodology and parameters in the ODCM utilizing the system design flow rates as specified in the ODCM. This conservative method is used because the Fermi 2 design does not include flow rate measurement devices. This will ensure the alarm/trip will occur prior to exceeding the limits of 10 CFR Part 20. The FUNCTIONAL CAPABILITY and use of this instrumentation is consistent with the requirements of General Design Criteria 60, 63, and 64 of Appendix A to 10 CFR Part 50.

3/4.11.1 LIQUID EFFLUENTS

3/4.11.1.1 CONCENTRATION

This control is provided to ensure that the concentration of radioactive materials released in liquid waste effluents to UNRESTRICTED AREAS will be less than ten times the concentration levels specified in 10 CFR Part 20, Appendix B, Table 2, Column 2. This limitation provides additional assurance that the levels of radioactive materials in bodies of water in UNRESTRICTED AREAS will result in exposures within (1) the Section II.A design objectives of Appendix I, 10 CFR Part 50, to a MEMBER OF THE PUBLIC and (2) the limits of 10 CFR Part 20.1301 to a MEMBER OF THE PUBLIC. The concentration limit for dissolved or entrained noble gases is based upon the assumption that Xe-135 is the controlling radioisotope and its MPC in air (submersion) was converted to an equivalent concentration in water using the methods described in International Commission on Radiological Protection (ICRP) Publication 2.

The required detection capabilities for radioactive materials in liquid waste samples are tabulated in terms of the lower limits of detection (LLDs). Detailed discussion of the LLD, and other detection limits can be found in HASL Procedure Manual, HASL-300 (revised annually), Currie, L. A., "Limits for Qualitative Detection and Quantitative Determination - Application to Radiochemistry," Anal. Chem. 40, 586-93 (1968), and Hartwell, J. K., "Detection Limits for Radioanalytical Counting Techniques," Atlantic Richfield Hanford Company Report ARH-SA-215 (June 1975).

3/4.11.1.2 DOSE

This control is provided to implement the requirements of Sections II.A, III.A, and IV.A of Appendix I, 10 CFR Part 50. The control implements the guides set forth in Section II.A of Appendix I. The ACTION statements provide the required operating flexibility and at the same time implement the guides set forth in Section IV.A of Appendix I to assure that the releases of radioactive material in liquid effluents to UNRESTRICTED AREAS will be kept "as low as is reasonably achievable." Also, for fresh water sites with drinking water supplies that can be potentially affected by plant operations, there is reasonable assurance that the operation of the facility will not result in radionuclide concentrations in the finished drinking water that are in excess of the requirements of 40 CFR Part 141. The dose calculation methodology and parameters in the ODCM implement the requirements in Section III.A of Appendix I that conformance with the guides of Appendix I be shown by calculational procedures based on models and data, such that the actual exposure of a MEMBER OF THE PUBLIC through appropriate pathways is unlikely to be substantially underestimated. The equations specified in the ODCM for calculating the doses due to the actual release rates of radioactive materials in liquid effluents are consistent with the methodology provided in Regulatory Guide 1.109, "Calculation of Annual Doses to Man from Routine Releases of Reactor Effluents for the Purpose of Evaluating Compliance with 10 CFR Part 50, Appendix I," Revision 1, October 1977 and Regulatory Guide 1.113, "Estimating Aquatic Dispersion of Effluents from Accidental and Routine Reactor Releases for the Purpose of Implementing Appendix I," April 1977.

3/4.11.1.3 LIQUID RADWASTE TREATMENT SYSTEM

The FUNCTIONAL CAPABILITY of the liquid radwaste treatment system ensures that this system will be available for use whenever liquid effluents require treatment prior to their release to the environment. The requirement that the appropriate portions of this system be used, when specified, provides assurance that the releases of radioactive materials in liquid effluents will be kept "as low as is reasonably achievable". This specification implements the requirements of General Design Criterion 60 of Appendix A to 10 CFR Part 50 and the design objective given in Section II.D of Appendix I to 10 CFR Part 50. The specified limits governing the use of appropriate portions of the liquid radwaste treatment system were specified as a suitable fraction of the dose design objectives set forth in Section II.A of Appendix I, 10 CFR Part 50, for liquid effluents.

3/4.11.2 GASEOUS EFFLUENTS

3/4.11.2.1 DOSE RATE

This control is provided to ensure that the dose to individual MEMBERS OF THE PUBLIC from gaseous effluents from all units on the site will be within the limits of 10 CFR Part 20.1301.

3/4.11.2.1 DOSE RATE (Continued)

Although this control applies to the SITE BOUNDARY, the occupancy and exposure pathways applicable to a MEMBER OF THE PUBLIC who may at times be within the SITE BOUNDARY will usually be such that such an individual will not receive significantly greater dose due to gaseous effluents than a MEMBER OF THE PUBLIC who remains outside the SITE BOUNDARY. Examples of calculations for such MEMBERS OF THE PUBLIC, with the appropriate occupancy factors, shall be given in the ODCM. The specified dose rate limits restrict, at all times, the dose rates above background to a MEMBER OF THE PUBLIC at or beyond the SITE BOUNDARY to less than or equal to 500 mrems/year to the total body or to less than or equal to 3000 mrems/year to the skin. These dose rate limits also restrict, at all times, the thyroid dose rates above background to a child via the inhalation pathway to less than or equal to 1500 mrems/year.

The required detection capabilities for radioactive materials in gaseous waste samples are tabulated in terms of the lower limits of detection (LLDs). Detailed discussion of the LLD, and other detection limits can be found in HASL Procedures Manual, HASL-300 (revised annually), Currie, L. A., "Limits for Qualitative Detection and Quantitative Determination - Application to Radiochemistry," Anal. Chem. 40, 586-93 (1968), and Hartwell, J. K., "Detection Limits for Radioanalytical Counting Techniques," Atlantic Richfield Hanford Company Report ARH-SA-215 (June 1975).

3/4.11.2.2 DOSE - NOBLE GASES

This control is provided to implement the requirements of Sections II.B, III.A, and IV.A of Appendix I, 10 CFR Part 50. The control implements the guides set forth in Section II.B of Appendix I. The ACTION statements provide the required operating flexibility and at the same time implement the guides set forth in Section IV.A of Appendix I to assure that the releases of radioactive material in gaseous effluents to UNRESTRICTED AREAS will be kept "as low as is reasonably achievable." The Surveillance Requirements implement the requirements in Section III.A of Appendix I that conformance with the guides of Appendix I be shown by calculational procedures based on models and data such that the actual exposure of a MEMBER OF THE PUBLIC through appropriate pathways is unlikely to be substantially underestimated. The dose calculation methodology and parameters established in the ODCM for calculating the doses due to the actual release rates of radioactive noble gases in gaseous effluents are consistent with the methodology provided in Regulatory Guide 1.109, "Calculation of Annual Doses to Man from Routine Releases of Reactor Effluents for the Purpose of Evaluating Compliance with 10 CFR Part 50, Appendix I," Revision 1, October 1977 and Regulatory Guide 1.111, "Methods for Estimating Atmospheric Transport and Dispersion of Gaseous Effluents in Routine Releases from Light-Water Cooled Reactors," Revision 1, July 1977. The ODCM equations provided for determining the air doses at and beyond the SITE BOUNDARY are based upon the historical average atmospheric conditions.

3/4.11.2.3 DOSE - IODINE-131, IODINE-133, TRITIUM, AND RADIONUCLIDES IN PARTICULATE FORM

This control is provided to implement the requirements of Sections II.C, III.A, and IV.A of Appendix I, 10 CFR Part 50. The controls are the guides set forth in Section II.C of Appendix I. The ACTION statements provide the required operating flexibility and at the same time implement the guides set forth in Section IV.A of Appendix I to assure that the releases of radioactive materials in gaseous effluents to UNRESTRICTED AREAS will be kept "as low as is reasonably achievable." The ODCM calculational methods specified in the Surveillance Requirements implement the requirements in Section III.A of Appendix I that conformance with the guides of Appendix I be shown by calculational procedures based on models and data, such that the actual exposure of a MEMBER OF THE PUBLIC through appropriate pathways is unlikely to be substantially underestimated. The ODCM calculational methodology and parameters for calculating the doses due to the actual release rates of the subject materials are consistent with the methodology provided in Regulatory Guide 1.109, "Calculation of Annual Doses to Man from Routine Releases of Reactor Effluents for the Purpose of Evaluating Compliance with 10 CFR Part 50, Appendix I," Revision 1, October 1977 and Regulatory Guide 1.111, "Methods for Estimating Atmospheric Transport and Dispersion of Gaseous Effluents in Routine Releases from Light-Water-Cooled Reactors," Revision 1, July 1977. These equations also provide for determining the actual doses based upon the historical average atmospheric conditions. The release rate controls for iodine-131, iodine-133, tritium, and radionuclides in particulate form with half lives greater than 8 days are dependent upon the existing radionuclide pathways to man, in the areas at and beyond the SITE BOUNDARY. The pathways that were examined in the development of these calculations were: (1) individual inhalation of airborne radionuclides, (2) deposition of radionuclides onto green leafy vegetation with subsequent consumption by man, (3) deposition onto grassy areas where milk animals and meat producing animals graze with consumption of the milk and meat by man, and (4) deposition on the ground with subsequent exposure of man.

3/4.11.2.4 OFF-GAS TREATMENT SYSTEM

The FUNCTIONAL CAPABILITY of the OFF-GAS TREATMENT SYSTEM ensures that the system will be available for use whenever gaseous effluents require treatment prior to release to the environment. The requirement that the appropriate portions of these systems be used, when specified, provides reasonable assurance that the releases of radioactive materials in gaseous effluents will be kept "as low as is reasonably achievable." This control implements the requirements of General Design Criteria 60 of Appendix A to 10 CFR Part 50, and the design objectives given in Section II.D of Appendix I to 10 CFR Part 50. The specified limits governing the use of appropriate portions of the systems were specified as a suitable fraction of the dose design objectives set forth in Sections II.B and II.C of Appendix I, 10 CFR Part 50, for gaseous effluents.

3/4.11.2.5 VENTILATION EXHAUST TREATMENT SYSTEM

The requirement that the appropriate portions of this system be used, when specified, provides reasonable assurance that the releases of radioactive materials in gaseous effluents will be kept "as low as is reasonably achievable." The specified limits governing the use of appropriate portions of the systems were specified as a suitable fraction of the dose design objectives set forth in Sections II.B and II.C of Appendix I, 10 CFR Part 50, for gaseous effluents.

3/4.11.2.8 VENTING OR PURGING

This control provides reasonable assurance that releases from primary containment purging operations will not exceed the annual dose limits of 10 CFR Part 20 for UNRESTRICTED AREAS.

3/4.11.4 TOTAL DOSE

This control is provided to meet the dose limitations of 40 CFR Part 190 that have been incorporated into 10 CFR Part 20 by 46 FR 18525. The control requires the preparation and submittal of a Special Report whenever the calculated doses from plant generated radioactive effluents and direct radiation exceed 25 mrem to the total body or any organ, except the thyroid, which shall be limited to less than or equal to 75 mrems. For sites containing up to 4 reactors, it is highly unlikely that the resultant dose to a member of the public will exceed the dose limits of 40 CFR Part 190 if the individual reactors remain within twice the dose design objectives of Appendix I, and if direct radiation doses from the reactor units and outside storage tanks are kept small. The Special Report will describe a course of action that should result in the limitation of the annual dose to a member of the public to within the 40 CFR Part 190 limits. For the purpose of the Special Report, it may be assumed that the dose commitment to the member of the public from other than uranium fuel cycle sources is negligible, with the exception that dose contributions from other nuclear fuel cycle facilities at the same site or within a radius of 8 km must be considered. If the dose to any member of the public is estimated to exceed the requirements of 40 CFR Part 190, the Special Report with a request for a variance (provided the release conditions resulting in violation of 40 CFR Part 190 have not already been corrected), in accordance with the provisions of 40 CFR Part 190.11 and 10 CFR Part 20.2203, is considered to be a timely request and fulfills the requirements of 40 CFR Part 190 until NRC staff action is completed. The variance only relates to the limits of 40 CFR Part 190, and does not apply in any way to the other requirements for dose limitation of 10 CFR Part 20, as addressed in Controls 3.11.1.1 and 3.11.2.1. An individual is not considered a member of the public during any period in which he/she is engaged in carrying out any operation that is part of the nuclear fuel cycle.

3/4.12.1 MONITORING PROGRAM

The radiological environmental monitoring program required by this control provides representative measurements of radiation and of radioactive materials in those exposure pathways and for those radionuclides that lead to the highest potential radiation exposures of MEMBERS OF THE PUBLIC resulting from the station operation. This monitoring program implements Section IV.B.2 of Appendix I to 10 CFR Part 50 and thereby supplements the radiological effluent monitoring program by verifying that the measureable concentrations of radioactive materials and levels of radiation are not higher than expected on the basis of the effluent measurements and the modeling of the environmental exposure pathways. Guidance for this monitoring program is provided by the Radiological Assessment Branch Technical Position on Environmental Monitoring. The initially specified monitoring program will be effective for at least the first 3 years of commercial operation. Following this period, program changes may be initiated based on operational experience.

The required detection capabilities for environmental sample analyses are tabulated in terms of the lower limits of detection (LLDs). The LLDs required by Table 4.12.1-1 are considered optimum for routine environmental measurements in industrial laboratories. It should be recognized that the LLD is defined as an a priori (before the fact) limit representing the capability of a measurement system and not as an a posteriori (after the fact) limit for a particular measurement.

Detailed discussion of the LLD, and other detection limits, can be found in HASL Procedure Manual, HASL-300 (revised annually), Currie, L. A., "Limits for Qualitative Detection and Quantitative Determination - Application to Radiochemistry," Anal. Chem. 40, 586-93 (1968), and Hartwell, J. K., "Detection Limits for Radioanalytical Counting Techniques," Atlantic Richfield Hanford Company Report ARH-SA-215 (June 1975).

3/4.12.2 LAND USE CENSUS

This control is provided to ensure that changes in the use of areas at and beyond the SITE BOUNDARY are identified and that modifications to the radiological environmental monitoring program are made if required by the results of this census. The best information from the door-to-door survey, from aerial survey, from visual survey or from consulting with local agricultural authorities shall be used. This census satisfies the requirements of Section IV.B.3 of Appendix I to 10 CFR Part 50. Restricting the census to gardens of greater than 50 m^2 provides assurance that significant exposure pathways via leafy vegetables will be identified and monitored since a garden of this size is the minimum required to produce the quantity (26 kg/year) of leafy vegetables assumed in Regulatory Guide 1.109 for consumption by a child. To determine this minimum garden size, the following assumptions were made: (1) 20% of the garden was used for growing broad leaf vegetation (i.e., similar to lettuce and cabbage), and (2) a vegetation yield of 2 kg/m^2.

3/4.12.3 INTERLABORATORY COMPARISON PROGRAM

The requirement for participation in an Interlaboratory Comparison Program which is audited periodically is provided to ensure that independent checks on the precision and accuracy of the measurements of radioactive material in environmental sample matrices are performed as part of the quality assurance program for environmental monitoring in order to demonstrate that the results are valid for the purposes of Section IV.B.2 of Appendix I to 10 CFR Part 50.

END OF SECTION 4.0

SECTION 5.0

ADMINISTRATIVE CONTROLS

ANNUAL RADIOLOGICAL ENVIRONMENTAL OPERATING REPORT

5.9.1.7 Routine Annual Radiological Environmental Operating Reports covering the operation of the unit during the previous calendar year shall be submitted prior to May 1 of each year. The initial report shall be submitted prior to May 1 of the year following initial criticality.

The Annual Radiological Environmental Operating Reports shall include summaries, interpretations, and an analysis of trends of the results of the radiological environmental surveillance activities for the report period, including a comparison as appropriate, with preoperational studies, with operational controls, and with previous environmental surveillance reports, and an assessment of the observed impacts of the plant operation on the environment. The reports shall also include the results of land use censuses required by Control 3.12.2. The Annual Radiological Environmental Operating Reports shall include the results of analysis of all radiological environmental samples and of all environmental radiation measurements taken during the period pursuant to the locations specified in Table 10.0-1 in the ODCM, as well as summarized and tabulated results of these analyses and measurements in the format of the table in the Radiological Assessment Branch Technical Position, Revision 1, November 1979. In the event that some individual results are not available for inclusion with the report, the report shall be submitted noting and explaining the reasons for the missing results. If possible, the missing data shall be submitted as soon as possible in a supplementary report.

The reports shall also include the following: a summary description of the radiological environmental monitoring program; one or more tables covering all sampling locations; the results of licensee participation in the Interlaboratory Comparison Program, required by Control 3.12.3; discussion of all deviations from the sampling schedule of Table 3.12.1-1; and discussion of all analyses in which the LLD required by Table 4.12.1-1 was not achievable.

ANNUAL RADIOACTIVE EFFLUENT RELEASE REPORT*

5.9.1.8 Routine Annual Radioactive Effluent Release Reports covering the operation of the unit during the previous year of operation shall be submitted prior to May 1 of each year. The period of the first report shall begin with the date of initial criticality.

---

*A single submittal may be made for a mutiple unit station. The submittal should combine those sections that are common to all units at the station; however, for units with separate radwaste systems, the submittal shall specify the releases of radioactive material from each unit.

ANNUAL RADIOACTIVE EFFLUENT RELEASE REPORT (Continued)

The Annual Radioactive Effluent Release Report shall include a summary of the quantities of radioactive liquid and gaseous effluents and solid waste released from the unit as outlined in Regulatory Guide 1.21, "Measuring, Evaluating, and Reporting Radioactivity in Solid Wastes and Releases of Radioactive Materials in Liquid and Gaseous Effluents from Light-Water-Cooled Nuclear Power Plants," Revision 1, June 1974, with data summarized on a quarterly basis following the format of Appendix B thereof.

The Annual Radioactive Effluent Release Report shall include an annual summary of hourly meteorological data collected over the previous year. This annual summary may be either in the form of an hour-by-hour listing on an electronic medium of wind speed, wind direction, atmospheric stability, and precipitation (if measured), or in the form of joint frequency distributions of wind speed, wind direction, and atmospheric stability.*** This same report shall include an assessment of the radiation doses due to the radioactive liquid and gaseous effluents released from the unit or station during the previous calendar year. This same report shall also include an assessment of the radiation doses from radioactive liquid and gaseous effluents to MEMBERS OF THE PUBLIC due to their activities inside the SITE BOUNDARY (Figure 3.0-1) during the report period. All assumptions used in making these assessments, i.e., specific activity, exposure time and location, shall be included in these reports. The assessment of radiation doses shall be performed in accordance with the methodology and parameters in the OFFSITE DOSE CALCULATION MANUAL (ODCM).

The Annual Radioactive Effluent Release Report shall also include an assessment of radiation doses to the likely most exposed MEMBER OF THE PUBLIC from reactor releases and other nearby uranium fuel cycle sources, including doses from primary effluent pathways and direct radiation, for the previous calendar year to show conformance with 40 CFR Part 190, Environmental Radiation Protection Standards for Nuclear Power Operation. The assessment of radiation doses shall be performed in accordance with methodology and parameters in the ODCM.

The Annual Radioactive Efluent Release Reports shall include the following information for each class of solid waste (as defined by 10 CFR Part 61) shipped offsite during the report period:

a. Total volume in all containers,

b. Total curie quantity (specify whether determined by measurement or estimate),

***In lieu of submission with the Annual Radioactive Effluent Release Report, the licensee has the option of retaining this summary of required meteorological data on site in a file that shall be provided to the NRC upon request.

ANNUAL RADIOACTIVE EFFLUENT RELEASE REPORT (Continued)

c. Principal radionuclides (specify whether determined by measurement or estimate),

d. Source of waste and processing employed (e.g., dewatered spent resin, compacted dry waste, evaporator bottoms),

e. Type of container (e.g., LSA, Type A, Type B, Large Quantity), and

f. Solidification agent or absorbent (e.g., cement, urea formaldehyde).

The Annual Radioactive Effluent Release Reports shall include a list and description of unplanned releases from the site to UNRESTRICTED AREAS of radioactive materials in gaseous and liquid effluents made during the reporting period.

The Annual Radioactive Effluent Release Reports shall include any changes made during the reporting period to the OFFSITE DOSE CALCULATION MANUAL (ODCM) as described in Technical Specification 5.5.1.3, as well as a listing of new locations for dose calculations and/or environmental monitoring identified by the land use census pursuant to Control 3.12.2.

The Annual Radioactive Effluent Release Reports shall also include the following: an explanation as to why the not FUNCTIONALLY CAPABLE status of liquid or gaseous effluent monitoring instrumentation was not corrected within the time specified in Control 3.3.7.11 or 3.3.7.12, respectively; and description of the events leading to liquid holdup tanks exceeding the limits of Technical Specification 5.5.8.6.

The Annual Radioactive Effluent Release Reports shall include the results of analysis of all onsite groundwater sampling and a description of any detected onsite radioactive leaks or spills into groundwater.

5.15 MAJOR CHANGES TO RADIOACTIVE LIQUID, GASEOUS, AND SOLID WASTE TREATMENT SYSTEMS*

5.15.1 Licensee-initiated major changes to the radioactive waste systems (liquid, gaseous, and solid):

a. Shall be reported to the Commission in the Annual Radioactive Effluent Release Report for the period in which the evaluation was reviewed by the OSRO. The discussion of each change shall contain:

1. A summary of the evaluation that led to the determination that the change could be made in accordance with 10 CFR 50.59.

2. Sufficient detailed information to totally support the reason for the change without benefit of additional or supplemental information;

*Licensees may choose to submit the information called for in this Control as part of the UFSAR revision in accordance with 10 CFR 50.71(e).

Note: Page content was last changed with ODCM Revision 17.

3. A detailed description of the equipment, components, and processes involved and the interfaces with other plant systems;

4. An evaluation of the change, which shows the predicted releases of radioactive materials in liquid and gaseous effluents and/or quantity of solid waste that differ from those previously predicted in the license application and amendments thereto;

5. An evaluation of the change, which shows the expected maximum exposures to a MEMBER OF THE PUBLIC in the UNRESTRICTED AREA and to the general population that differ from those previously estimated in the license application and amendments thereto;

6. A comparison of the predicted releases of radioactive materials, in liquid and gaseous effluents and in solid waste, to the actual releases for the period prior to when the changes are to be made;

7. An estimate of the exposure to plant operating personnel as a result of the change; and

8. Documentation of the fact that the change was reviewed and found acceptable by the OSRO.

b. Shall become effective upon review and acceptance by the OSRO.

END OF SECTION 5.0

SECTION 6.0

LIQUID EFFLUENTS

6.0 LIQUID EFFLUENTS

This section summarizes information on the liquid effluent radiation monitoring instrumentation and controls. More detailed information is provided in the Fermi 2 UFSAR and Fermi 2 design drawings from which this summary was derived. This section also describes the sampling and analysis required by the Offsite Dose Calculation Manual. Methods for calculating alarm setpoints for the liquid effluent monitors are presented. Also, methods for evaluating doses from liquid effluents are provided.

6.1 Radiation Monitoring Instrumentation and Controls

This section summarizes the instrumentation and controls monitoring liquid effluents. This discussion focuses on the role of this equipment in assuring compliance with the Offsite Dose Calculation Manual.

6.1.1 Offsite Dose Calculation Manual (ODCM) 3.3.7.11 Requirement

Fermi 2 ODCM 3.3.7.11 prescribes the monitoring required during liquid releases and the backup sampling required when monitors are not FUNCTIONALLY CAPABLE.

The liquid effluent monitoring instrumentation for controlling and monitoring radioactive effluents in accordance with the Fermi 2 ODCM 3.3.7.11 is summarized below:

1. **Radiation Alarm - Automatic Release Termination**

   a. Liquid Radwaste Effluent Line - The D11-N007 Radiation Monitor on the liquid radwaste effluent line provides the alarm and automatic termination of liquid radioactive material releases prior to exceeding 1 Maximum Permissible Concentration (MPC) at the discharge to Lake Erie, as required by ODCM 3.3.7.11. The monitor is located upstream of the Isolation Valve (G11-F733) on the liquid radwaste discharge line and monitors the concentration of liquid effluent before dilution by the circulating water reservoir (CWR) decant flow.

2. **Radiation Alarm (only)**

   a. Circulating Water Reservoir (CWR) Decant Line - The CWR Decant Line Radiation Monitor (D11-N402) provides indication of the concentration of radioactive material in the diluted radioactive liquid releases just before discharge to Lake Erie. As required by ODCM 3.3.7.11, the alarm setpoint is established to alarm (only) prior to exceeding one MPC.

3. **Flow Rate Measuring Devices**

a. Liquid Radwaste Effluent Line - In accordance with ODCM 3.3.7.11, the release rate of liquid radwaste discharges is monitored by G11-R703. This flow rate instrumentation is located on the radwaste discharge line prior to the junction with the CWR decant line.

b. Circulating Water Reservoir Decant Line - The flow rate measuring device for the CWR decant line has been removed. The flow rate of the CWR decant line is now measured using certified pump performance curves for the CWR decant pumps, together with readings from pump discharge pressure gauges and reservoir level indication.

6.1.2 Non-ODCM Required Monitor

An additional monitor not required by Fermi 2 ODCM is provided by Detroit Edison to reduce the likelihood of an unmonitored release of radioactive liquids.

1. General Service Water - The General Service Water (GSW) Radiation Monitor (D11-N008) provides additional control of potential radioactive effluents. D11-N008 monitors the GSW System prior to discharge into the Main Condenser circulating water discharge line to the Circulating Water Reservoir. Although not an ODCM required monitor, D11-N008 monitors a primary liquid stream in the plant that also discharges to the environment (Lake Erie via the Circulating Water Reservoir). Indication of radioactive material contamination in the GSW System would also indicate potential CWR contamination and the need to control all discharges from the CWR as radioactive effluents.

6.2 Sampling and Analysis of Liquid Effluents

The program for sampling and analysis of liquid waste is prescribed in the Fermi 2 Offsite Dose Calculation Manual Table 4.11.1.1.1-1. This table distinguishes two types of liquid releases: a) BATCH releases, defined as discrete volumes, from the Waste Sample Tanks (normally after processing through the radwaste system), and b) CONTINUOUS releases, from the Circulating Water Reservoir (CWR) System, if it becomes contaminated.

Continuous releases from the CWR System are via the CWR decant line to Lake Erie. The CWR System is not expected to become contaminated. Therefore, continuous radioactive material releases are not expected. However, the General Service Water (GSW) and the CWR systems interface with radioactive systems in the plant. Also, the GSW intake is within a few hundred feet of the CWR decant line discharge to Lake Erie. For these reasons, it is prudent to consider the GSW and the CWR a potential source of radioactive effluents and to sample them regularly.

6.2.1 BATCH Releases

Fermi 2 ODCM Table 4.11.1.1.1-1 requires that a sample representative of the tank contents be obtained before it is released. The table specifies the following program:

- Prior to sampling, the tank is isolated. The tank level is determined and this value is converted to tank volume. A pump with a known recirculation flow rate is then activated to recirculate tank contents. The pump is allowed to run for at least the time required to recirculate the tank volume twice.

- Prior to each batch release, analysis for principal gamma emitters and dissolved and entrained gases (including all peaks identified by gamma spectroscopy)

- Once per month, analysis of a composite sample of all releases that month for tritium (H-3) and gross alpha activity. (The composite sample is required to be representative of the liquids released and sample quantities of the composite are to be proportional to the quantities of liquid discharged).

- Once per quarter, analysis of a composite sample of all releases that quarter for Strontium (Sr)-89, Sr-90, and Iron (Fe)-55.

6.2.2 CONTINUOUS Releases

Fermi 2 ODCM Table 4.11.1.1.1-1 requires that composite samples be collected from the CWR System, if contaminated. The table specifies the following sample analysis:

- Once per month, analysis of a composite sample for principal gamma emitters and for I-131.
- Once per month, analysis of a composite sample for H-3 and gross alpha.
- Once per month, analysis of weekly grab samples (composited) for dissolved and entrained gases (gamma emitters).
- Once per quarter, analysis for Sr-89, -90 and Fe-55.

6.3 Liquid Effluent Monitor Setpoints

Offsite Dose Calculation Manual 3.11.1.1 requires that the concentration of liquid radioactive effluents not exceed the unrestricted area MPC at the discharge point to Lake Erie. Dissolved or entrained noble gases in liquid effluents are limited to a concentration of 2 E-04 µCi/ml, total noble gas activity. ODCM 3.3.7.11 requires that radiation monitor setpoints be established to alarm prior to exceeding the limits of ODCM 3.11.1.1.

To meet this specification, the alarm setpoints for liquid effluent monitors are determined in accordance with the following equation:

$$SP \leq \frac{CL(DF + RR)}{RR} \qquad (6\text{-}1)$$

where:

SP = the setpoint, in µCi/ml, of the monitor measuring the radioactivity concentration in the effluent line prior to dilution. The setpoint represents a value which, if exceeded, would result in concentrations exceeding the MPC in the unrestricted area

CL = the effluent concentration limit (ODCM 3.11.1.1) corresponding to ten times the limits of 10 CFR Part 20.1302.b.2.i at the discharge point in µCi/ml, defined in Equation (6-4)

RR = the liquid effluent release rate as measured at the radiation monitor location, in volume per unit time, but in the same units as DF, below

DF = the dilution water flow as measured prior to the release point (Lake Erie) in volume per unit time

At Fermi 2 the available Dilution Water Flow (DF) is essentially constant for a given release, and the waste tank Release Rate (RR) and monitor Setpoint (SP) are set to meet the condition of Equation (6-1) for a given effluent Concentration Limit, CL.

NOTE: If no dilution is provided, SP $\leq$ CL. Also, when DF is large compared to RR, then (DF + RR)$\simeq$DF, and DF may be used instead of (DF + RR) as a simplification, as in Equation (6-5).

6.3.1 Liquid Radwaste Effluent Line Monitor

The Liquid Radwaste Effluent Line Monitor D11-N007 provides alarm and automatic termination of releases prior to exceeding MPC. As required by ODCM Table 4.11.1.1.1-1 and as discussed in ODCM Section 6.2.1, a sample of the liquid radwaste to be discharged is collected and analyzed by gamma spectroscopy to identify principal gamma emitting radionuclides. From the measured individual radionuclide concentrations, the allowable release rate is determined.

The allowable release rate is inversely proportional to the ratio of the radionuclide concentrations to the MPC values. The ratio of the measured concentration to MPC values is referred to as the "MPC fraction" and is calculated by the equation:

$$MPCF = \sum \frac{C_i}{MPC_i} \qquad (6\text{-}2)$$

where:

MPCF = fraction of the unrestricted area MPC for a mixture of gamma emitting radionuclides

C_i = concentration of each gamma emitting radionuclide i measured in each tank prior to release (µCi/ml)

MPC_i = unrestricted area most restrictive MPC for each radionuclide i: ten times the value from 10 CFR Part 20, Appendix B, Table 2, Column 2. For dissolved and entrained noble gases an MPC value of 2E-04 µCi/ml may be used, but noble gases need not be included in this calculation.

Including noble gases in Equation (6-2) eliminates the need for a separate evaluation of compliance with the noble gas concentration limit of ODCM 3.11.1.1.

Based on the MPCF, the maximum allowable release rate can be calculated by the following equation:

$$MAX\,RR \leq \frac{DF}{\left(MPCF * (1 + BF)\right) + H3MPCF} * SF \qquad (6\text{-}3)$$

where:

MAX RR = maximum acceptable waste tank discharge rate (gal/min) (Monitor #G11-R703)

DF = dilution flow rate from the CWR decant line, measured as described in ODCM section 6.1.1.3.b.

SF = administrative safety factor to account for variations in monitor response and flow rates. A SF value of 0.5 is suggested because it provides for 100% variation caused by statistical fluctuation and/or errors in measurements.

BF = conservative estimate of the ratio of the MPC fraction of pure beta emitters other than tritium to the gamma MPC fraction (MPCF) (The value 0.10 may be used for BF.)

MPCF = As previously defined by equation (6-2)

H3MPCF = conservative estimate of MPC fraction due to tritium (The value 0.13 may be used for H3MPCF.)

NOTE: Equation (6-3) is valid only for MPCF >1; if the MPCF ≤1, the waste tank concentration meets the limits of 10 CFR Part 20 without dilution, and the tank may be discharged at the maximum rate.

If MAX RR as calculated above is greater than the maximum discharge pump capacity, the pump capacity should be used in establishing the actual Release Rate RR for the radwaste discharge. For a Waste Sample Tank, the maximum discharge rate is 50 gallons per minute. This Release Rate RR is monitored in the Radwaste Control Room by G11-R703.

The Concentration Limit (CL) of a liquid radwaste discharge is the same as the effective MPC for the radionuclide mixture of the discharge. Simply, the CL (or effective MPC) represents the equivalent MPC value for a mixture of radionuclides evaluated collectively. The equation for determining CL is:

$$CL = \frac{\sum C_i}{MPCF} \tag{6-4}$$

Based on the Release Rate RR and Dilution Flow DF and by substituting Equation (6-4) for CL in Equation (6-1) and introducing sensitivity factors and factors to account for the presence of pure beta emitters, the alarm setpoint is calculated by the equation:

$$SP \leq \frac{\sum (C_i * SEN_i) * DF * H3F * SF}{MPCF * (1 + BF) * RR} + Bkg \tag{6-5}$$

where:

SP = setpoint of the radiation monitor counts per second (cps) or counts per minute (cpm)

C_i = concentration of radionuclide i as measured by gamma spectroscopy (µCi/ml)

SEN_i = monitor sensitivity for radionuclide i based on calibration curve (cps/(µCi/ml) or cpm/(µCi/ml)) or single conservative value for all radionuclides (see below)

RR = actual release rate of the liquid radwaste discharge (gal/min)

BF = pure beta factor as defined for Equation (6-3)

MPCF = MPC fraction as determined by Equation (6-2)

H3F = correction factor to account for estimated tritium concentration at the discharge point (The value 0.99 may be used.)

Bkg = background reading of monitor (cps)

DF = dilution flow rate from the CWR decant line, measured as described in ODCM section 6.1.1.3.b. Also see note preceding Section 6.3.1.

SF = 1.0 when a single conservative sensitivity value is used; 0.5 when individual nuclide sensitivity factors are used

The sensitivity of Cr-51 determined from the primary calibration sensitivity curves may be used as a single conservative value for SEN_i above. The Cr-51 sensitivity has been determined to be conservative based on the nuclide mixes which have been seen in actual liquid discharges from Fermi 2. For the D11-N007 monitor, a monitor sensitivity value of 1.0 E6 cps/(μCi/ml) may be used as the single conservative value of SEN_i.

If no radionuclides are measured by gamma spectroscopy, the alarm setpoint can be established at one half the setpoint of the most recent discharge for which radionuclides were detected by gamma spectroscopy.

Prior to conducting any batch liquid radwaste release, Equation (6-3) is used to determine the allowable release rate in accordance with ODCM 3.11.1.1. Equation (6-5) is used to determine the alarm setpoint in accordance with ODCM 3.3.7.11.

6.3.2 Circulating Water Reservoir Decant Line Radiation Monitor (D11-N402)

ODCM 3.3.7.11 requires that the setpoint for the CWR Decant Line Radiation Monitor D11-N402 be established to ensure the radioactive material concentration in the decant line prior to discharge to Lake Erie does not exceed MPC, unrestricted area (ten times 10 CFR 20, Appendix B, Table 2, Column 2 values). The approach for determining the alarm setpoint for the CWR Decant Line Radiation Monitor is the same as presented in Section 6.3.1. However, the CWR Decant Line Radiation Monitor setpoint need not be changed prior to each release. Equation (6-1) remains valid, except that, for the CWR Decant Line Monitor, the dilution flow previously assumed for diluting the BATCH liquid radwaste effluents is now the release rate. There is no additional dilution prior to discharge to Lake Erie. Thus, Equation (6-1) simplifies to:

$$SP \leq CL \tag{6-6}$$

Substituting Equation (6-4) for CL and introducing a safety factor, sensitivity factors, and monitor background, the D11-N402 alarm setpoint can be calculated by the equation:

$$SP \leq \frac{\sum (C_i * SEN_i) * SF}{MPCF} + Bkg \tag{6-7}$$

where:

SP	=	setpoint in counts per minute (cpm)
C_i	=	concentration of each radionuclide i in the CWR decant line effluent (μCi/ml)
SEN_i	=	monitor sensitivity for nuclide i based on calibration curve (cpm/(μCi/ml))
MPCF	=	MPC fraction as determined by Equation (6-2) with C_i defined as for Equation (6-7)
SF	=	0.5, administrative safety factor
Bkg	=	background reading of monitor (cpm)

Normally, only during periods of batch liquid radwaste discharges will there exist any plant-related radioactive material in the CWR decant line.

6.3.3 Generic, Conservative Alarm Setpoint for D11-N402

The D11-N402 setpoint could be adjusted for each BATCH release as is done for the liquid radwaste effluent line monitor. Based on the measured levels of radioactive material in a BATCH liquid release, the alarm setpoint for D11-N402 could be calculated using Equation (6-7). However, during these planned releases, the concentrations will almost always be so low (due to dilution) that the D11-N402 Monitor will not indicate measurable levels. The CWR decant line design flow is 10,000 gpm; and the maximum liquid radwaste release rate is 50 gpm, providing a 200:1 dilution. The radioactive material concentration of BATCH liquid releases is typically in the range of 10^{-7} to 10^{-4} μCi/ml. With a nominal 200:1 dilution (actual dilution has been greater since in actual releases the decant line flow rate has been about 18,000 gpm), the CWR decant line monitor would monitor diluted activity in the range of 5×10^{-10} to 5×10^{-7} μCi/ml. D11-N402 Monitor response at these levels would be 0.1 to 100 cpm, depending on the particular radionuclide mixture and corresponding instrument response. These response levels are less than the monitor background levels.

In lieu of routinely adjusting the D11-N402 setpoints, generic, conservative setpoints have been established based on an analysis of nuclides seen in actual liquid discharges and on the primary calibration sensitivity curve.

6.3.4 Alarm Setpoint for GSW and RHR System Radiation Monitors

Levels of radioactive material detectable above background at Radiation Monitor D11-N008 would be one of the first indicators of contamination of the General Service Water (GSW) System and the CWR. Likewise, for the Residual Heat Removal (RHR) System, the D11-N401 A and B Monitors would be one of the first indicators of contamination and subsequent contamination of the CWR. Therefore, to provide early indication and assure prompt attention, the alarm setpoints for these monitors should be established as close to background as possible without incurring a spurious alarm due to background fluctuations. This level is typically around three times background.

If the GSW System or RHR System becomes contaminated, it may become necessary to raise the radiation monitor setpoints. The alarm setpoints should be re-evaluated to provide the CR operator a timely indication of further increasing activity levels in the GSW or RHR System without spurious alarms. The method for this re-evaluation is the same as described above - the alarm setpoint established at three times its current reading. No regulatory limits apply for establishing a maximum value for these alarm setpoints since these monitors are located on plant systems and do not monitor final release points to the environment. However, as a practical matter, upper limits on the alarm setpoints can be evaluated using the methods of ODCM Section 6.3.1 based on the actual system flows, dilution and release paths in effect at the time.

6.3.5 Alarm Response - Evaluating Actual Release Conditions

Normally, liquid release rates are controlled and alarm setpoints are established to ensure that the release does not exceed the concentration limits of ODCM 3.11.1.1 at the discharge to Lake Erie. However, if either Monitor D11-N007 or D11-N402 alarms during a liquid release, it becomes necessary to re-evaluate the release conditions to determine compliance with ODCM 3.11.1.1. Following an alarm, the actual release conditions should be determined. Radioactive material concentrations should be evaluated by sampling the effluent stream or resampling the waste tank. Discharge flow and dilution water flow should be redetermined.

To perform this evaluation, the following equation may be used for all nuclides, or dissolved and entrained noble gases may be evaluated separately from other nuclides using this equation:

$$\left[\sum\left(\frac{C_i}{MPC_i}\right) * \frac{RR}{DF + RR} * \frac{(1 + BF)}{H3F}\right] \leq 1 \qquad (6\text{-}8)$$

where:

C_i = measured concentration of radionuclide i in the effluent stream (µCi/ml)

MPC_i = the MPC value for radionuclide i: ten times the 10 CFR 20, Appendix B, Table 2, Column 2 value (µCi/ml); 2 E-04 µCi/ml for dissolved or entrained noble gases

RR = actual release rate of the liquid effluent at the time of the alarm, gpm

DF = actual dilution circulating water flow at the time of the release alarm, gpm

H3F,BF = as previously defined

NOTE: For alarm on D11-N402 (CWR decant line), the Release Rate RR is the Dilution Water Flow DF and the DF term drops out of the equation.

6.3.6 Liquid Radwaste Monitor Setpoint Determination with Contaminated Circulating Water Reservoir

In the event the CWR is determined to contain radioactive material, the effective dilution capacity of the CWR is reduced as a function of the MPCF. To determine the available dilution flow capacity the MPCF for the CWR is determined using equation (6-2). The MPCF of the CWR is used to determine the available dilution flow as follows:

CWR Dilution Flow = CWR Decant Flow Rate (GPM) * (1-CWR MPCF)

(6-9)

The resulting dilution flow rate is substituted in equation (6-3) to determine the maximum allowable release rate for discharges from the radwaste system. Substituting the available CWR dilution flow from equation (6-9), the Liquid Radwaste Monitor maximum release rate can be determined using equation (6-3).

Once the available dilution flow and maximum allowable release rate have been determined the radwaste monitor setpoint can be determined using equation (6-5).

6.4 Contaminated GSW or RHR System - Quantifying and Controlling Releases

The GSW Radiation Monitor (D11-N008) provides an indication of contamination of this system. The Monitors D11-N401 A and B perform this function for the RHR System. Also, the CWR Decant Line Radiation Monitor monitors all liquid releases from the plant and would record any release to Lake Erie from either of these systems if contaminated. As discussed in ODCM Section 6.2.2, sampling and analysis of the CWR System is required only if this system is contaminated, as would be indicated by D11-N402 or D11-N008. Nonetheless, periodic samples are collected from the CWR System to verify absence of contamination. Although not required by the ODCM, periodic sampling and analysis of the RHR System is also performed since it also is a potential source of contamination of the CWR and subsequent releases to Lake Erie. If contamination is found, further releases from the applicable system (GSW or RHR) via the CWR decant line must be evaluated and controlled to ensure that releases are maintained ALARA. The following actions will be considered for controlling releases.

- Sampling frequency of the applicable source (GSW or RHR System) and the CWR will be increased until the source of the contamination is found and controlled. This frequency may be relaxed after the source of contamination has been identified and isolated.

- Gamma spectral analysis will be performed on each sample.

- The measured radionuclide concentrations from the gamma spectral analysis will be compared with MPC (Equation 6-2) to ensure releases are within the limits of ODCM 3.11.1.1.

- Based on the measured concentrations, the setpoint for the CWR Decant Line Radiation Monitor (D11-N402) will be determined as specified in Section 6.3.2. If the calculated setpoint based on the measured distribution is greater than the current setpoint (see ODCM Section 6.3.3) no adjustment to the setpoint is required.

- Samples will be composited in accordance with ODCM Table 4.11.1.1.1-1 for monthly analysis for H-3 and gross alpha and for quarterly analysis for Sr-89, 90 and Fe-55.

- Each sample will be considered representative of the releases that have occurred since the previous sample. For each sample (and corresponding release period), the volume of liquid released to the lake will be determined based on the measured CWR decant line cumulative flow.

- From the sample analysis and the calculated volume released, the total radioactive material released will be determined and considered representative of the release period. Cumulative doses will be determined in accordance with ODCM Section 6.5.

6.5 Liquid Effluent Dose Calculation - 10 CFR 50

The parameters of the liquid release (or estimated parameters, for a pre-release calculation) may be used to calculate the potential dose to the public from the release (or planned release). The dose calculation provides a conservative method for estimating the impact of radioactive effluents released by Fermi 2 and for comparing that impact against limits set by the NRC in the Fermi 2 ODCM. The limits in the Fermi 2 ODCM are specified as quarterly and calendar year limits. This assures that the average over the year is kept as low as reasonably achievable.

6.5.1 MEMBER OF THE PUBLIC Dose - Liquid Effluents

ODCM 3.11.1.2 limits the dose or dose commitment to MEMBERS OF THE PUBLIC from radioactive materials in liquid effluents from Fermi 2 to:

- during any calendar quarter;
  ≤ 1.5 mrem to total body
  ≤ 5.0 mrem to any organ

- during any calendar year;
  ≤ 3.0 mrem to total body
  ≤ 10.0 mrem to any organ

ODCM 4.11.1.2 requires that quarterly and annual cumulative dose due to liquid effluents be determined at least once per 31 days. The calculation of the potential doses to MEMBERS OF THE PUBLIC is a function of the radioactive material releases to the lake, the subsequent transport and dilution in the exposure pathways, and the resultant individual uptake. At Fermi 2, pre-operational evaluation of radiation exposure pathways indicated that doses from consumption of fish from Lake Erie provided the most conservative estimate of doses from releases of radioactive liquids. However, with the proximity of the water intakes for the City of Monroe and Frenchtown Township, it must be assumed that individuals will consume drinking water as well as fish that might contain radioactivity from discharges into Lake Erie.

Study of the currents in Lake Erie indicates that the current in the Lagoona Beach embayment carries liquid effluents from Fermi 2 north along the coast part of the time and south along the coast part of the time. When the current flows north, liquid effluents are carried away from the drinking water Intakes, so only the fish consumption exposure pathway must be considered. When the current flows south, toward the drinking water Intakes, both fish consumption and drinking water consumption exposure pathways must be considered. To ensure conservatism in the dose modeling, the combined fish and drinking water pathway is used for evaluating the maximum hypothetical dose to a MEMBER OF THE PUBLIC from liquid radioactive effluents. The following calculational methods may be used for determining the dose or dose commitment due to the liquid radioactive effluents from Fermi 2:

$$D_o = \frac{1.67\ E-02 * VOL}{DF * Z} * \sum (C_i * A_{io})$$

(6-10)

where:

D_O = dose or dose commitment to organ o or total body (mrem) due to release of a single tank

A_{io} = site-specific ingestion dose commitment factor to the total body or any organ o for radionuclide i (mrem/hr per µCi/ml)

C_i = concentration of radionuclide i in undiluted liquid effluent representative of the volume VOL (µCi/ml)

VOL = total volume of liquid effluent released (gal)

DF = average dilution water flow (CWR decant line) during tank release (gal/min)

Z = 5, near field dilution factor (Derived from Regulatory Guide 1.109, Rev 0)

1.67 E-02 = 1 hr/60 min

The site-specific ingestion dose/dose commitment factors (A_{io}) represents a composite dose factor for the fish and drinking water pathway. The site-specific dose factor is based on the NRC's generic maximum individual consumption rates. Values of A_{io} are presented in Table 6-1. They were derived in accordance with guidance of NUREG-0133 from the following equation:

$$A_{io} = 1.14\ E+05\ \left[(U_W / D_W) + (U_F * BF_i)\right] DF_i$$

(6-11)

where:

U_F = 21 kg/yr adult fish consumption

U_W = 730 liters/yr adult water consumption

D_W = 13.4, additional dilution from the near field to the water intake for Frenchtown Township (Net dilution factor of 67 from discharge point to a point documented in Fermi 2 UFSAR, Chapter 11, which is closer to the discharge point than this drinking water intake)

BF_i = Bioaccumulation factor for radionuclide i in fish from Table 6.0-2 (pCi/kg per pCi/liter)

DF_i = dose conversion factor for nuclide i for adults in organ o from Table E-11 of Regulatory Guide 1.109 (mrem/pCi)

$$1.14\,E + 05 = \frac{10^6 (pCi / uCi) * 10^3 (ml / kg)}{8760\ (hr / yr)}$$

The radionuclides included in the periodic dose assessment required by ODCM 3.11.1.2 are those identified by gamma spectral analysis of the liquid waste samples collected and analyzed per the requirements of ODCM Table 4.11.1.1.1-1. In keeping with the NUREG-0133 guidance, the adult age group represents the maximum exposed individual age group. Evaluation of doses for other age groups is not required for demonstrating compliance with the dose criteria of ODCM 3.11.1.2. The dose analysis for radionuclides requiring radiochemical analysis will be performed after receipt of results of the analysis of the composite samples. In keeping with the required analytical frequencies of ODCM Table 4.11.1.1.1-1, tritium dose analyses will be performed at least monthly; Sr-89, Sr-90 and Fe-55 dose analyses will be performed at least quarterly.

6.5.2 Contaminated CWR System - Dose Calculation

If the CWR System becomes contaminated, releases via the CWR System to Lake Erie must be included in the evaluation of the cumulative dose to a MEMBER OF THE PUBLIC as required by ODCM 3.11.1.2. ODCM Section 6.4 described the methods for quantifying and controlling releases from the CWR System.

For calculating the dose to a MEMBER OF THE PUBLIC, Equation (6-10) remains applicable for releases from the GSW System with the following assumptions:

- DF, Dilution Flow, is set equal to the average CWR decant line flow rate over the release period.

- C_i, Radionuclide Concentration, is determined as specified in ODCM Section 6.4.

- VOL, Volume Released, is set equal to the total volume of the discharges to Lake Erie via the CWR decant line as specified in Section 6.4.

6.6 Liquid Effluent Dose Projections

10 CFR 50.36a requires licensees to maintain and operate the Radwaste System to ensure releases are maintained ALARA. This requirement is implemented through ODCM 3.11.1.3. This section requires that the Liquid Radioactive Waste Processing System be used to reduce the radioactive material levels in the liquid waste prior to release when the projected dose in any 31 day period would exceed:

- 0.06 mrem to the total body, or

- 0.2 mrem to any organ

When the projected doses exceed either of the above limits, the waste must be processed by the Liquid Radwaste System prior to release. This dose criteria for processing is established at one forty eighth of the design objective rate (3 mrem/yr, total body or 10 mrem/yr any organ) in any 31 day period.

The applicable Liquid Waste Processing System for maintaining radioactive material releases ALARA is the Mixed Bed Demineralizers as delineated in Figure 6-1. Alternately, the Waste Evaporator (presented in the Fermi 2 UFSAR, Section 11.2) can be used to meet the NRC ALARA design requirements. It may be used in conjunction with or in lieu of the Mixed Bed Demineralizers to meet the waste processing requirements of ODCM 3.11.1.3.

Each BATCH release of liquid radwaste is evaluated to ensure that cumulative doses are maintained ALARA. In keeping with the requirements of ODCM 3.11.1.3, dose projections are made at least once per 31 days to evaluate the need for additional radwaste processing to ensure future releases are maintained ALARA.

The following equations may be used for the dose projection calculation:

$$D_{tbp} = D_{tb}(31 / d) \tag{6-14}$$

$$D_{\max p} = D_{\max}(31 / d) \tag{6-15}$$

where:

D_{tbp} = the total body dose projection for the next 31 day period (mrem)

NOTE: The reference calendar quarter is normally the current calendar quarter. If there have been liquid releases in the previous quarter but not in the current quarter, the previous quarter should be used as the reference calendar quarter.

D_{tb} = the cumulative total body dose for all releases to date in the reference calendar quarter (normally the current quarter) as determined by equation (6-10) or (6-12) (mrem)

D_{maxp}	=	the maximum organ dose projection for the next 31 day period (mrem)
D_{max}	=	the cumulative maximum organ dose for all releases to date in the reference calendar quarter as determined by Equation (6-10) or (6-13) (mrem)
d	=	the number of days from the beginning of the reference calendar quarter to the date of the dose projection evaluation.
31	=	the number of days in projection

TABLE 6.0-1

Fermi 2 Site Specific Liquid Ingestion Dose Commitment Factors
A_{io} (mrem/hr per uCi/ml)

Nuclide	Bone	Liver	T Body	Thyroid	Kidney	Lung	GI-LLI
H-3	-	8.78E-1	8.78E-1	8.78E-1	8.78E-1	8.78E-1	8.78E-1
C-14	3.13E+4	6.26E+3	6.26E+3	6.26E+3	6.26E+3	6.26E+3	6.26E+3
Na-24	4.18E+2	4.18E+2	4.18E+2	4.18E+2	4.18E+2	4.18E+2	4.18E+2
P-32	1.39E+6	8.63E+4	5.36E+4	-	-	-	1.56E+5
Cr-51	-	-	1.29E+0	7.70E-1	2.84E-1	1.71E+0	3.24E+2
Mn-54	-	4.40E+3	8.40E+2	-	1.31E+3	-	1.35E+4
Mn-56	-	1.11E+2	1.97E+1	-	1.41E+2	-	3.54E+3
Fe-55	6.75E+2	4.67E+2	1.09E+2	-	-	2.60E+2	2.68E+2
Fe-59	1.07E+3	2.51E+3	9.60E+2	-	-	7.00E+2	8.35E+3
Co-57	-	2.20E+1	3.66E+1	-	-	-	5.59E+2
Co-58	-	9.38E+1	2.10E+2	-	-	-	1.90E+3
Co-60	-	2.69E+2	5.94E+2	-	-	-	5.06E+3
Ni-63	3.19E+4	2.21E+3	1.07E+3	-	-	-	4.62E+2
Ni-65	1.30E+2	1.68E+1	7.69E+0	-	-	-	4.27E+2
Cu-64	-	1.05E+1	4.92E+0	-	2.64E+1	-	8.94E+2
Zn-65	2.32E+4	7.38E+4	3.34E+4	-	4.94E+4	-	4.65E+4
Zn-69	4.94E+1	9.44E+1	6.57E+0	-	6.14E+1	-	1.42E+1
Br-82	-	-	2.28E+3	-	-	-	2.62E+3
[illegible]-83	-	-	4.07E+1	-	-	-	5.86E+1
[illegible]4	-	-	5.27E+1	-	-	-	4.14E-4
Br-85	-	-	2.17E+0	-	-	-	1.01E-15
Rb-86	-	1.01E+5	4.71E+4	-	-	-	1.99E+4
Rb-88	-	2.90E+2	1.54E+2	-	-	-	4.01E-9
Rb-89	-	1.92E+2	1.35E+2	-	-	-	1.12E-11
Sr-89	2.40E+4	-	6.90E+2	-	-	-	3.85E+3
Sr-90	5.91E+5	-	1.45E+5	-	-	-	1.71E+4
Sr-91	4.42E+2	-	1.79E+1	-	-	-	2.11E+3
Sr-92	1.68E+2	-	7.26E+0	-	-	-	3.32E+3
Y-90	6.36E-1	-	1.70E-2	-	-	-	6.74E+3
Y-91m	6.00E-3	-	2.33E-4	-	-	-	1.76E-2
Y-91	9.31E+0	-	2.49E-1	-	-	-	5.13E+3
Y-92	5.58E-2	-	1.63E-3	-	-	-	9.78E+2
Y-93	1.77E-1	-	4.89E-3	-	-	-	5.62E+3
Zr-95	4.29E-1	1.38E-1	9.31E-2	-	2.16E-1	-	5.50E+2
Zr-97	2.37E-2	4.78E-3	2.19E-3	-	7.22E-3	-	1.48E+3
Nb-95	4.47E+2	2.49E+2	1.34E+2	-	2.46E+2	-	1.51E+6
Nb-97	3.75E+0	9.48E-1	3.46E-1	-	1.11E+0	-	3.50E+3
Mo-99	-	1.30E+2	2.47E+1	-	2.94E+2	-	3.01E+2
Tc-99m	1.04E-2	2.94E-2	3.74E-1	-	4.46E-1	1.44E-2	1.74E+1
Tc-101	1.07E-2	1.54E-2	1.51E-1	-	2.78E-1	7.88E-3	4.63E-14

TABLE 6.0-1

Fermi 2 Site Specific Liquid Ingestion Dose Commitment Factors
A_{io} (mrem/hr per uCi/ml)

Nuclide	Bone	Liver	T Body	Thyroid	Kidney	Lung	GI-LLI
Ru-103	5.58E+0	-	2.40E+0	-	2.13E+1	-	6.51E+2
Ru-105	4.64E-1	-	1.83E-1	-	6.00E+0	-	2.84E+2
Ru-106	8.29E+1	-	1.05E+1	-	1.60E+2	-	5.37E+3
Rh-103m	-	-	-	-	-	-	-
Rh-106	-	-	-	-	-	-	-
Ag-110m	1.87E+0	1.73E+0	1.03E+0	-	3.41E+0	-	7.08E+2
Sb-124	2.41E+1	4.56E-1	9.56E+0	5.84E-2	-	1.88E+1	6.84E+2
Sb-125	1.54E+1	1.72E-1	3.66E+0	1.57E-2	-	1.19E+1	1.70E+2
Te-125m	2.58E+3	9.36E+2	3.46E+2	7.77E+2	1.05E+4	-	1.03E+4
Te-127m	6.52E+3	2.33E+3	7.95E+2	1.67E+3	2.65E+4	-	2.19E+4
Te-127	1.06E+2	3.81E+1	2.29E+1	7.86E+1	4.32E+2	-	8.37E+3
Te-129m	1.11E+4	4.13E+3	1.75E+3	3.81E+3	4.63E+4	-	5.58E+4
Te-129	3.03E+1	1.14E+1	7.37E+0	2.32E+1	1.27E+2	-	2.28E+1
Te-131m	1.67E+3	8.15E+2	6.79E+2	1.29E+3	8.26E+3	-	8.10E+4
Te-131	1.90E+1	7.93E+0	5.99E+0	1.56E+1	8.32E+1	-	2.69E+0
Te-132	2.43E+3	1.57E+3	1.47E+3	1.73E+3	1.51E+4	-	7.43E+4
I-130	3.18E+1	9.39E+1	3.71E+1	7.96E+3	1.47E+2	-	8.09E+1
I-131	1.75E+2	2.51E+2	1.44E+2	8.21E+4	4.30E+2	-	6.61E+1
I-132	8.55E+0	2.29E+1	8.00E+0	8.00E+2	3.64E+1	-	4.30E+0
I-133	5.98E+1	1.04E+2	3.17E+1	1.53E+4	1.82E+2	-	9.35E+1
I-134	4.46E+0	1.21E+1	4.34E+0	2.10E+2	1.93E+1	-	1.06E-2
I-135	1.87E+1	4.89E+1	1.81E+1	3.22E+3	7.83E+1	-	5.52E+1
Cs-134	2.98E+5	7.10E+5	5.80E+5	-	2.30E+5	7.62E+4	1.24E+4
Cs-136	3.12E+4	1.23E+5	8.87E+4	-	6.86E+4	9.40E+3	1.40E+4
Cs-137	3.82E+5	5.23E+5	3.42E+5	-	1.77E+5	5.90E+4	1.01E+4
Cs-138	2.65E+2	5.23E+2	2.59E+2	-	3.84E+2	3.79E+1	2.23E-3
Ba-139	1.53E+0	1.09E-3	4.48E-2	-	1.02E-3	6.19E-4	2.72E+0
Ba-140	3.20E+2	4.03E-1	2.10E+1	-	1.37E-1	2.30E-1	6.60E+2
Ba-141	7.44E-1	5.62E-4	2.51E-2	-	5.23E-4	3.19E-4	3.50E-10
Ba-142	3.36E-1	3.46E-4	2.12E-2	-	2.92E-4	1.96E-4	4.74E-19
La-140	1.65E-1	8.32E-2	2.23E-2	-	-	-	6.11E+3
La-142	8.46E-3	3.84E-3	9.58E-4	-	-	-	2.81E+1
Ce-141	8.05E-2	5.45E-2	6.18E-3	-	2.53E-2	-	2.08E+2
Ce-143	1.42E-2	1.05E+1	1.16E-3	-	4.62E-3	-	3.92E+2
Ce-144	4.20E+0	1.76E+0	2.25E-1	-	1.04E-0	-	1.42E+3
Pr-143	6.08E-1	2.44E-1	3.01E-2	-	1.41E-1	-	2.66E+3
Pr-144	1.99E-3	8.26E-4	1.01E-4	-	4.66E-4	-	2.86E-10
Nd-147	4.16E-1	4.80E-1	2.87E-2	-	2.81E-1	-	2.31E+3
W-187	2.97E+2	2.48E+2	8.67E+1	-	-	-	8.12E+4
Np-239	3.59E-2	3.53E-3	1.94E-3	-	1.10E-2	-	7.24E+2

TABLE 6.0-2

Bioaccumulation Factors (BF_i)
(pCi/kg per pCi/liter)*

Element	Freshwater Fish
H	9.0E-01
C	4.6E+03
Na	1.0E+02
P	3.0E+03
Cr	2.0E+02
Mn	4.0E+02
Fe	1.0E+02
Co	5.0E+01
Ni	1.0E+02
Cu	5.0E+01
Zn	2.0E+03
Br	4.2E+02
Rb	2.0E+03
Sr	3.0E+01
Y	2.5E+01
Zr	3.3E+00
Nb	3.0E+04
Mo	1.0E+01
Tc	1.5E+01
Ru	1.0E+01
Rh	1.0E+01
Ag	2.3E+00
Sb	1.0E+00
Te	4.0E+02
I	1.5E+01
Cs	2.0E+03
Ba	4.0E+00
La	2.5E+01
Ce	1.0E+00
Pr	2.5E+01
Nd	2.5E+01
W	1.2E+03
Np	1.0E+01

* Values in this table are taken from Regulatory Guide 1.109 except for phosphorus, which is adapted from NUREG/CR-1336, and silver and antimony, which are taken from UCRL 50564, Rev 1, October 1972.

FIGURE 6.0-1

Liquid Radioactive Effluent Monitoring and Processing Diagram

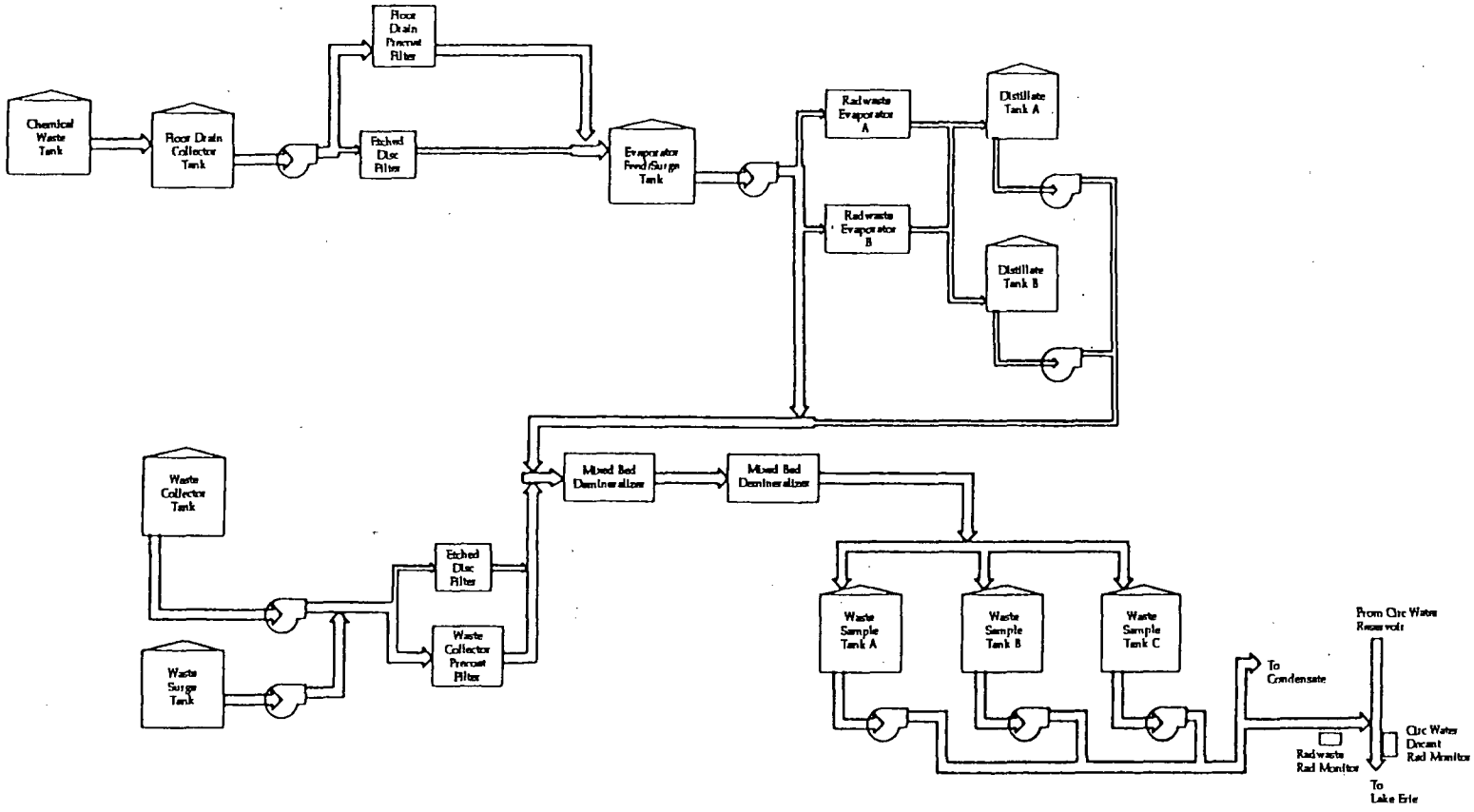

END OF SECTION 6.0

SECTION 7.0

GASEOUS EFFLUENTS

7.0 GASEOUS EFFLUENTS

7.1 Radiation Monitoring Instrumentation and Controls

7.1.1 Effluent Monitoring - Ventilation System Releases

The gaseous effluent monitoring instrumentation required at Fermi 2 for controlling and monitoring radioactive effluents are specified in ODCM 3.3.7.12. The monitoring of each identified gaseous effluent release point must include the following:

- Noble Gas Activity Monitor
- Iodine Sampler (sample cartridge containing charcoal or silver zeolite)
- Particulate Sampler (filter paper)
- Sampler Flow Rate Monitor

Meeting these requirements, a total of six Eberline SPING Monitoring Systems are installed on the five gaseous release points (Onsite Storage Facility, Radwaste Building, Turbine Building, Reactor Building Exhaust Plenum, and Standby Gas Treatment System Division 1 and Division 2). The SPING Monitor outputs are recorded electronically in the SS-1 Control Terminal in the Main Control Room.

In general, a reading exceeding the High alarm setpoint of the SPING Monitors causes an alarm in the Control Room. Fermi 2 ODCM Table 3.3.7.12-1 identifies these alarm functions.

7.1.2 Main Condenser Offgas Monitoring

ODCM Table 3.3.7.12-1 and Technical Requirements Manual Volume 1, section TR 3.3.12, specify monitoring requirements for the Offgas System at the 2.2 minute delay line. The following monitors are required:

- Hydrogen Monitor - used to ensure the hydrogen concentration in the Offgas Treatment System is maintained less than 4% by volume as required by Technical Requirements Manual Volume 1, section TRLCO 3.3.12.

- Noble Gas Activity Monitor - used to ensure the gross activity release rate is maintained within 340 millicuries per second after 30 minute decay as required by Technical Specification 3.7.5.

  These two monitors perform safety functions. The Hydrogen Monitor monitors the potential explosive mixtures in the Offgas System. The Noble Gas Monitor monitors the release rate from the main condenser ensuring doses at the exclusion area boundary will not exceed a small fraction of the limits of 10 CFR 100 in the event this effluent is inadvertently discharged directly to the environment bypassing the Offgas Treatment System.

Note: Page content was last changed with ODCM Revision 16.

7.1.3 Reactor Building Ventilation Monitors (Gulf Atomic)

The Gulf Atomic Monitors (D11-N408 and 410) on the Reactor Building Ventilation System provide on high radiation levels (above alarm setpoint) initiation of SGTS, isolation of drywell vent/purge, isolation of the RB and Control Center Ventilation Systems and initiation of Control Center recirculation mode ventilation. These monitors and functions are not required by Fermi 2 ODCM but are important in controlling containment venting/purging.

7.2 Sampling and Analysis of Gaseous Effluents

The program for sampling and analysis of gaseous waste is prescribed in Fermi 2 ODCM Table 4.11.2.1.2-1. This table distinguishes two types of gaseous releases: (1) containment PURGE, treated as BATCH releases, and (2) discharges from the Reactor Building Exhaust Plenum (including Standby Gas Treatment System (SGTS) when operating), and other building ventilation exhausts, treated as CONTINUOUS releases.

7.2.1 Containment PURGE

ODCM Table 4.11.2.1.2-1 requires that samples be collected and analyzed before each primary containment PURGE. Sampling and analysis is required within eight hours before starting a PURGE. ODCM Table 4.11.2.1.2-1 Footnote j and ODCM 4.11.2.8.2 also require that if the purging or venting is through the Reactor Building ventilation, rather than through SGTS, and if the primary containment radiation monitoring system is not FUNCTIONALLY CAPABLE or in alarm condition, sampling and analysis is required within 8 hours prior to and at least once per 12 hours during venting or purging of the primary containment. The required analyses must include principal gamma emitters and, if a pre-vent or pre-purge sample, tritium.

For a planned containment PURGE, the results of the samples and analyses may be used to establish the acceptable release rate and radiation monitor alarm setpoint in accordance with ODCM Sections 7.3 and 7.4. This evaluation may be necessary to ensure compliance with the dose rate limits of ODCM 3.11.2.1. In practice, release flow rates are fairly constant and these calculations are necessary only if a threshold value of nuclide concentration in the primary containment atmosphere is reached. The alarm setpoints of the primary containment atmosphere monitor, the Reactor Building ventilation exhaust monitors, and the Reactor Building and SGTS SPING monitors are set to ensure that release routes are continuously monitored and controlled in accordance with 10 CFR 20 or limits specified in the ODCM.

7.2.2 Ventilation System Releases

ODCM Table 4.11.2.1.2-1 requires continuous samples of releases from the RB Exhaust Plenum, Standby Gas Treatment System, Radwaste Building, Turbine Building, and Onsite Storage Facility. The table specifies the following program:

- Once per week, analysis of an adsorbent sample of I-131 and I-133, plus analysis of a particulate sample for principal gamma emitters.

- Once per month, analysis of a composite particulate sample of all releases (by release point) that month for gross alpha activity.

- Once per quarter, analysis of a composite particulate sample of all releases that quarter for Sr-89 and Sr-90.

- Once per month, analysis of a grab sample for principal gamma emitters (noble gases and tritium).

- Analysis of a grab sample for principal gamma emitters (noble gases) from the Offgas Vent Pipe sample lines, as needed to supplement RB Exhaust Plenum sampling. Normally performed monthly in conjunction with RB Exhaust Plenum grab sampling.

ODCM Table 4.11.2.1.2-1 also requires continuous monitoring for noble gases. This requirement is met by the SPING Monitors on each of the plant gaseous release points.

The ODCM requires more frequent sampling and analysis following reactor startup, shutdown, or change in thermal power exceeding 15% within one hour. The ODCM allows an exception to this increased sampling schedule when the applicable SPING noble gas monitor has not increased more than a factor of three.

Grab samples of the Fuel Pool Ventilation Exhaust are required tritium analysis once per seven days whenever spent fuel is in the Spent Fuel Pool. Also, grab samples for tritium are required when either the reactor well or the dryer separator pool is filled. These samples are taken at the Reactor Building Exhaust Plenum and Standby Gas Treatment System (SGTS) when operating.

7.3 Gaseous Effluent Monitor Setpoint Determination

7 3.1 Ventilation System Monitors

Per the requirements of ODCM 3.3.7.12, alarm setpoints shall be established for the gaseous effluent monitoring instrumentation to ensure that the release rate of noble gases does not exceed the limits of ODCM 3.11.2.1. This section limits releases to a dose rate at the SITE BOUNDARY of 500 mrem/year to the total body or 3000 mrem/year to the skin. From a grab sample analysis of the applicable release (i.e., grab sample of the primary containment or Ventilation System release), the radiation monitoring alarm setpoints may be established by the following calculational method. The measured radionuclide concentrations and release rate are used to calculate the fraction of the allowable release rate, limited by ODCM 3.11.2.1, by the equation:

$$FRAC = \frac{1.67E+01 * \chi / Q * VF * \sum(C_i * K_i)}{500} \qquad (7\text{-}1)$$

$$FRAC = \frac{1.67E+01 * \chi / Q * VF * \sum(C_i * [L_i + 1.1M_i])}{3000} \qquad (7\text{-}2)$$

Where:

FRAC	=	fraction of the allowable release rate based on the identified radionuclide concentrations and the release flow rate
χ /Q	=	annual average meteorological dispersion to the controlling site boundary location from Table 7.0-3 (sec/m^3) or plant procedures
VF	=	Ventilation System flow rate for the applicable release point and monitor (liters/minute)
C_i	=	concentration of noble gas radionuclide i at release point as determined by gamma spectral analysis of grab sample (μCi/cc).
K_i	=	total body dose conversion factor for noble gas radionuclide i (mrem/yr per μCi/m^3, from Table 7.0-2)
L_i	=	beta skin dose conversion factor for noble gas radionuclide i (mrem/yr per μCi/m^3, from Table 7.0-2)

M_i	=	gamma air dose conversion factor for noble gas radionuclide i (mrad/yr per μCi/m^3, from Table 7.0-2)
1.1	=	mrem skin dose per mrad gamma air dose (mrem/mrad)
500	=	total body dose rate limit (mrem/yr)
3000	=	skin dose rate limit (mrem/yr)
1.67 E + 01	=	1 E + 03 (cc/liter) * (1/60) (min/sec)

Based on the more limiting (i.e., higher) value of FRAC as determined above, the alarm setpoints for the applicable monitors may be calculated by the equation:

$$SP \leq \frac{\left(AF * \sum C_i\right)}{FRAC} + Bkg \qquad (7\text{-}3)$$

Where:

SP	=	alarm setpoint corresponding to the maximum allowable release rate (μCi/cc)
Bkg	=	background of the monitor (μCi/cc)
AF	=	administrative allocation factor (Table 7.0-1) for the specific monitor and type release, which corresponds to the fraction of the total allowable release rate that is administratively allocated to the individual release points.
C_i	=	concentration of Noble Gas Radionuclide i as determined by gamma spectral analysis of grab sample (μCi/cc). Note: If the monitor channel in question was showing a response to the effluent at the time of the grab sample, this response minus background may be used in lieu of the summed grab sample concentrations.

The Allocation Factor (AF) is an administrative control imposed to ensure that combined releases from all release points at Fermi 2 will not exceed the regulatory limits on release rate from the site (i.e., the release rate limits of ODCM 3.11.2.1). From the Fermi 2 design evaluation of gaseous effluents presented in the UFSAR Section 11.3, representative values have been determined for AF. These values are presented in Table 7.0-1. These values may be changed in the future as warranted by operational experience, provided the site releases comply with ODCM 3.11.2.1. In addition to the allocation factor, safety factors which have the effect of lowering the calculated setpoints may be applied. When determining the Noble Gas Monitor calibration constant, the monitor sensitivity for Xe-133 may be used in lieu of the sensitivity values for the individual radionuclides. Because of its lower gamma energy and corresponding monitor response, the Xe-133 sensitivity provides a conservative value for alarm setpoint determination. Alternatively, if the monitor channel in question frequently shows a response to a mix of isotopes whose concentrations can be determined, the calibration constant may be determined from this type of data without reference to primary calibration data.

7.3.2 Setpoint Determination with No Nuclides Detected

When noble gas concentrations for a release point cannot be determined from grab samples, there are two options for setpoint determination. First, the setpoint may be set slightly above monitor background (e.g. 2 to 3 times background). This approach may be used when releases are not expected from a particular release point. Second, the equations of Section 7.3.1 may be used with noble gas concentration values based either on UFSAR tables or on values from a release point for which concentrations have been determined (e.g. reactor building exhaust plenum). When this method is used, a safety factor should be used in the setpoint calculation.

7.3.3 Gaseous Effluent Alarm Response - Evaluating Actual Release Conditions

The monitor alarm setpoint is used as the primary method for ensuring and demonstrating compliance with the release rate limits of ODCM 3.11.2.1. Not exceeding alarm setpoints constitutes a demonstration that release rates have been maintained within the ODCM limits. When an effluent Noble Gas Monitor exceeds the alarm setpoint, an evaluation of compliance with the release rate limits must be performed using actual release conditions. This evaluation requires collecting a sample of the effluent to establish actual radionuclide concentrations and permit evaluating the monitor response. The following equations may be used for evaluating compliance with the release rate limit of ODCM 3.11.2.1a:

$$D_{th} = 1.67E+01 * \chi / Q * VF * \sum\left(K_i * C_i\right) \tag{7-4}$$

$$D_s = 1.67E+01 * \chi / Q * VF * \sum\left(\left[L_i + 1.1M_i\right] * C_i\right) \tag{7-5}$$

Where:

D_{tb}	=	total body dose rate (mrem/yr)
D_s	=	skin dose rate (mrem/yr)
χ / Q	=	atmospheric dispersion to the controlling SITE BOUNDARY location (sec/m^3)
VF	=	Ventilation System release rate (liters/min)
C_i	=	concentration of radionuclide i as measured in the grab sample or as correlated from the SPING Noble Gas Monitor reading (µCi/cc)
K_i	=	total body dose conversion factor for noble gas radionuclide i (mrem/yr per µCi/m^3, from Table 7.0-2)
L_i	=	beta skin dose conversion factor for noble gas radionuclide i (mrem/yr per µCi/m^3, from Table 7.0-2)
M_i	=	gamma air dose conversion factor for noble gas radionuclide i (mrad/yr per µCi/m^3, from Table 7.0-2)
1.1	=	mrem skin dose per mrad gamma air dose (mrem/mrad)
1.67 E + 01	=	1 E + 03 (cc/liter) * (1/60) (min/sec)

The above equations may also be used to verify compliance with ODCM 3.11.2.1.a when noble gases are detected in periodic (e.g. monthly) effluent noble gas samples.

7.4 Primary Containment VENTING and PURGING

7.4.1 Release Rate Evaluation

For primary containment VENTING or PURGING, an evaluation of acceptable release rate may be performed prior to the release. Based on the measured noble gas concentration in the grab sample collected per the requirements of ODCM Table 4.11.2.1.2-1, the allowable release rate from primary containment can be calculated by the following equation:

$$RR_{tb} = \frac{500 * AF}{1.67 + 01 * \chi / Q * \sum (K_i * C_i)} \quad (7\text{-}6)$$

or

$$RR_s = \frac{3000 * AF}{1.67E + 01 * \chi / Q * \sum \left(\left[L_i + 1.1 M_i \right] * C_i \right)} \quad (7\text{-}7)$$

Where:

RR_{tb}	=	allowable release rate so as not to exceed a dose rate of 500 mrem/yr, total body (liters/minute)
RR_S	=	allowable release rate so as not to exceed a dose rate of 3000 mrem/yr, skin (liters/minute)
AF	=	allocation factor for the applicable release point from Table 7.0-1 (default value is 0.5 for Reactor Building Exhaust Plenum)
500	=	total body dose rate limit (mrem/yr)
3000	=	skin dose rate limit (mrem/yr)

The lesser value (RR_{tb} or RR_S) as calculated above may be used for establishing the allowable release rate for primary containment PURGING or VENTING, taking into account the fraction of the allocated release limit already accounted for by continuous releases from the proposed release point. As discussed in section 7.2.1, this evaluation is rarely necessary.

7.4.2 Alarm Setpoint Evaluation

For a primary containment VENTING or PURGING, a re-evaluation of the alarm setpoint may be needed to ensure compliance with the requirements of ODCM 3.3.7.12. For the identified release path (RB Exhaust Plenum or SGTS) and associated effluent Radiation Monitor, the alarm setpoint should be calculated using Equations (7-1), (7-2) and (7-3). In Equations (7-1) and (7-2), the value of the Ventilation Flow VF should be established at the total release flow rate, including the contribution from the PURGE or VENT. If the calculated alarm setpoint is greater than the current setpoint, no adjustments are necessary. As discussed in section 7.2.1, this setpoint evaluation is rarely necessary.

7.5 Quantifying Releases - Noble Gases

The determination of doses in the environment from releases is dependent on the mixture of the radioactive material. Also, NRC Regulatory Guide 1.21 requires reporting of individual radionuclides released in gaseous effluents. Therefore, Detroit Edison must determine the quantities of the individual radionuclides released. For noble gases, these quantities must be based on actual noble gas grab samples.

7.5.1 Sampling Protocol

As required by ODCM 3.11.2.1, a gas sample is collected at least monthly from each of the five gaseous release points (Reactor Building Exhaust Plenum, Standby Gas Treatment System, Radwaste Building, Turbine Building, and Onsite Storage Facility). As discussed in ODCM Section 7.2.2, this gas sample is analyzed by gamma spectroscopy to identify individual radionuclides (noble gases). Noble gases have been detected almost exclusively in the reactor building effluent.

As necessary to supplement grab sampling at the Reactor Building Exhaust Plenum, samples are taken from the Offgas Vent Pipe sample lines, normally on the same frequency as RB Exhaust Plenum samples. The Offgas Vent Pipe sample point is upstream of the RB Exhaust Plenum and noble gases are more concentrated at this point. Dilution factors are applied to Offgas Vent Pipe noble gas sample concentrations when the same nuclides are detected in both locations so that concentrations detected in RB Exhaust Plenum samples may be compared to concentrations based on Offgas Vent Pipe samples; the more conservative concentration values are used in release calculations.

For containment purges and containment ventings when monitoring is alarming or not FUNCTIONALLY CAPABLE, samples are collected prior to the initiation of the release and, for long releases, periodically throughout the release (see ODCM Section 7.2.1). When detected activity concentrations are above a pre-determined threshold, these samples are evaluated using Equations (7-4) and (7-5), using release rates applicable to the vent/purge condition and taking continuous releases into account, to ensure that the site boundary dose rate limits of ODCM 3.11.2.1 are not exceeded. If the primary containment atmosphere has equilibrated with the reactor building atmosphere, vent/purge sampling and analysis is not required. Such equilibrium with the drywell atmosphere may be considered to be established after at least one of the drywell equipment hatches has been open for 8 hours, and equilibrium with the torus atmosphere may be assumed after at least one torus hatch has been open for 8 hours.

As required by ODCM Table 4.11.2.1.2-1, special samples are required of the RB Exhaust Plenum and SGTS following shutdown, startup or a THERMAL POWER change exceeding 15% within a 1 hour period. Exceptions to this special sampling are allowed as noted previously in ODCM Section 7.2.2.

7.6 Calculation of Activity Released

The following equation may be used for determining the release quantities from any release point based on the sample analysis:

$$Q_i = 1.0E + 03 * VF * T * C_i \tag{7-8}$$

Where:

Q_i = total activity released of radionuclide i (μCi)

VF = Ventilation System release rate (liters/min)

T = total time of release period (min)

1.0 E + 03 = milliliters per liter

C_i = concentration of radionuclide i as determined by analysis of the sample (μCi/cc). For noble gas grab samples, this value may be corrected for variations during the release period by multiplying by the ratio of the average noble gas monitor reading during the release period to the reading at the time the sample was taken. For iodine and particulate samples, this value should be corrected for decay during the sampling period, for sample line loss if adequate data are available, and for collection efficiency if a significant fraction of the material to be collected passes through the collection media. For all samples, this value should be corrected for decay between sample collection and counting and for decay during counting.

7.7 Site Boundary Dose Rate - Radioiodine and Particulates

ODCM 3.11.2.1.b limits the dose rate to ≤1500 mrem/yr to any organ for I-131, I-133, tritium and particulates with half lives greater than 8 days. To demonstrate compliance with this limit, an evaluation is performed at a frequency no greater than that corresponding to the sampling and analysis time period (nominally once per 7 days). The following equation may be used in the dose rate evaluation for I-131, I-133, and particulates with half lives greater than 8 days:

$$DR = \sum_r \left(\chi / Q_r * R_{I-131} * VF_r * 16.7 * \sum_i C_{ir} \right) \tag{7-9}$$

Where:

DR = total maximum organ dose rate for all release points (mrem/yr)

χ / Q_r = atmospheric dispersion factor for release point r to the controlling SITE BOUNDARY location (sec/m^3) from Table 7-3 or plant procedures

R_{I-131} = I-131 child thyroid inhalation pathway dose factor (mrem/yr per μCi/m^3) from Table 7-4

VF_r = Average ventilation flow for release point r during release period (liters/min)

C_{ir} = Concentration of radionuclide i (I-131, I-133, or particulate with half life greater than 8 days) released from release point r during the appropriate release period (μCi/cc)--usually determined by gamma spectral analysis of effluent sample and corrected as described in definition of C_i in section 7.6

16.7 = 1000 cc/liter * 0.0167 min/sec

Release periods used in Equation (7-9) are the most recent periods evaluated for the different release points, and these periods may not be identical.

Alternatively, the site boundary dose rate may be evaluated using the highest individual isotopic dose factors for all age groups to calculate inhalation and ground plane exposure at the highest dispersion factor location at or beyond the site boundary, as well as vegetation, milk, and meat exposure at the garden, milk, and meat locations with the highest deposition factors. Dose rate due to tritium is currently evaluated by this method, and when tritium has been detected in gaseous effluents during the most recent release period, the tritium dose rate must be added to the result from Equation (7-9) to evaluate compliance with ODCM 3.11.2.1.b.

The dose rate evaluation described above may have to be performed more frequently than once per week in order to meet the requirements of ODCM Table 4.11.2.1.2-1, footnote g: Daily sampling is required following startup, shutdown, or thermal power changes exceeding 15% in one hour if the applicable noble gas effluent monitor reading has increased by a factor of 3.

7.8 Noble Gas Effluent Dose Calculations - 10 CFR 50

7.8.1 UNRESTRICTED AREA Dose - Noble Gases

ODCM 4.11.2.2 requires that an assessment of releases of noble gases be performed at least once per 31 days to evaluate compliance with the quarterly dose limits of 5 mrad, gamma-air and 10 mrad, beta-air and the calendar year limits 10 mrad, gamma-air and 20 mrad, beta-air. The following equations may be used to calculate the gamma-air and beta-air doses. If noble gases are detected at multiple release points, these equations must be performed for each such release point, and the calculated air doses must be summed.

$$D_\gamma = 3.17E-08 * \chi/Q * \sum(M_i * Q_i) \tag{7-10}$$

and

$$D_\beta = 3.17E-08 * \chi/Q * \sum(N_i * Q_i) \tag{7-11}$$

Where:

D_γ = air dose due to gamma emissions for noble gas radionuclides (mrad)

D_β = air dose due to beta emissions for noble gas radionuclides (mrad)

χ/Q = atmospheric dispersion to the controlling SITE BOUNDARY location (sec/m^3)

Q_i = cumulative release of noble gas radionuclide i over the period of interest (µCi)

M_i = air dose factor due to gamma emissions from noble gas radionuclide i (mrad/yr per µCi/m^3, from Table 7.0-2)

N_i = air dose factor due to beta emissions from noble gas radionuclide i (mrad/yr per µCi/m^3, Table 7.0-2)

3.17 E - 08 = 1/3.15 E + 07 (year/sec)

Note: Page content was last changed with ODCM Revision 15.

7.9 Radioiodine and Particulate Dose Calculations - 10 CFR 50

7.9.1 UNRESTRICTED AREA Dose - Radioiodine, Particulates, and Tritium

In accordance with requirements of ODCM 4.11.2.3, a periodic assessment (at least once per 31 days) is required to evaluate compliance with the quarterly dose limit of 7.5 mrem and the calendar year limit of 15 mrem to any organ. The following equation may be used to evaluate the maximum organ dose due to releases of I-131, I-133, tritium, and particulates with half-lives greater than 8 days:

$$D_{ao} = \sum_p \sum_r \sum_i \left(W_r * SF_p * 3.17E-8 * R_{aipo} * Q_{ir} \right) \tag{7-14}$$

Where:

D_{ao} = dose or dose commitment to Organ o of age group a (identified in Table 7.0-3 or plant procedures)

W_r = atmospheric dispersion parameter for release point r and the residence location identified in Table 7.0-3 or plant procedures. Either:

a) χ/Q, atmospheric dispersion for inhalation pathway and H-3 and C-14 dose contribution via other pathways (sec/m^3), or

b) D/Q, atmospheric deposition for vegetation, milk and ground plane exposure pathways (m^{-2})

R_{aipo} = dose factor (mrem/yr per µCi/m^3) or (m^2 - mrem/yr per µCi/sec) from Table 7.0-4 for radionuclide i, age group a, pathway p, and organ o as identified in Table 7.0-3 or plant procedures. Values for R_{aipo} were derived in accordance with the methods described in NUREG-0133. As noted in NUREG-0133 section 5.3.1.3, in the case that the milk animal is a goat, parameter values from Reg Guide 1.109 should be used. For I-131, for example, use of the goat feed/forage consumption rate given in Table E-3 and the stable element transfer factor given in Table E-2 of Reg Guide 1.109 results in grass-goat-milk dose factors which are equivalent to the grass-cow-milk dose factors in Table 7.0-4 multiplied by 1.2.

Note: Page content was last changed with ODCM Revision 15.

Q_{ir} = cumulative release from release point r over the period of interest (normally one month) for radionuclide i -- I-131, I-133, tritium or radioactive material in particulate form with half-life greater than 8 days (μCi).

SF_p = annual seasonal correction factor to account for the fraction of the year that the applicable exposure pathway does not exist:

1) For milk and vegetation exposure pathways:

= 0.5 (derived from Reg Guide 1.109, Rev 1. A six month fresh vegetation and grazing season (May through October) limits exposure through this pathway to half the year.

2) For inhalation and ground plane exposure pathways:

= 1.0 (derived from Reg Guide 1.109, Rev 1)

3.17 E-8 = 1 / 3.15 E7 (year/sec)

This equation should be used to evaluate organ doses for the individual with the highest potential offsite dose. This calculation is performed monthly and is added to previous results for the quarter and year. The highest quarterly and annual cumulative organ dose totals for this individual should be compared with the limits of ODCM 3.11.2.3.

The residence, age group, and relevant exposure pathways for this individual are listed in Table 7.0-3 and in plant procedures. Plant procedures may provide updated information which differs from Table 7.0-3. This individual is identified from data obtained in the annual Land Use Census (ODCM 3.12.2).

7.10 Gaseous Effluent Dose Projection

As with liquid effluents, the Fermi 2 ODCM controls on gaseous effluents require "processing" of gaseous effluents if the projected dose exceeds specified limits. These controls implement the requirements of 10 CFR 50.36a on maintaining and using the appropriate radwaste processing equipment to keep releases ALARA.

ODCM 3.11.2.5 requires that the VENTILATION EXHAUST TREATMENT SYSTEM be used to reduce radioactive material levels prior to discharge when the projected dose exceeds 0.3 mrem to any organ in any 31 day period (i.e., one-quarter of the design objective rate). Figure 7.0-1 presents the gaseous effluent release points and the VENTILATION EXHAUST TREATMENT SYSTEMS applicable for reducing effluents prior to release.

Dose projection is performed at least once per 31 days using the following equation:

$$D_{\max p} = D_{\max} * (31 / d) \tag{7-16}$$

Where:

D_{maxp} = maximum organ dose projection for the next 31 day period (mrem)

NOTE: The reference calendar quarter is normally the current calendar quarter. If the dose projection is done in the first month of the quarter and is to be based on dose calculated for the previous quarter, the reference calendar quarter is the previous quarter.

D_{max} = the cumulative maximum organ dose from the beginning of the reference calendar quarter (normally the current quarter) to the end of the most recently evaluated release period as determined by Equation (7-14) or (7-15) (mrem)

d = number of days from the beginning of the reference calendar quarter to the end of the most recently evaluated release period.

31 = number of days in projection

TABLE 7.0-1

Values for Evaluating Gaseous Release Rates and Alarm Setpoints

Release Point	Flow Rate (liter/min)	Allocation Factor (AF)	Allocated Dose Rate Limit (mrem/year)
Reactor Building Exhaust Plenum D11-P280	2.67E6	0.50	T Body = 250 Skin = 1500 Organ = 750
Standby Gas Treatment System Div I D11-P275	1.07E5	0.10	T Body = 50 Skin = 300 Organ = 150
Standby Gas Treatment System Div II D11-P276	1.12E5	0.10	T Body = 50 Skin = 300 Organ = 150
Turbine Building Ventilation D11-P279	8.67E6	0.20	T Body = 100 Skin = 600 Organ = 300
Radwaste Building Ventilation D11-P281	1.13E6	0.02	T Body = 10 Skin = 60 Organ = 30
Onsite Storage Building Ventilation D11-P299	3.06E5	0.02	T Body = 10 Skin = 60 Organ = 30
Reactor Building Ventilation* Gulf Atomic Monitors D11-N408, N410	2.57E6	0.50	T Body = 125 Skin = 750 Organ = 375

* D11-N408 and N410 will start the SGTS, close the Drywell Purge/Vent Valves, isolate Rx Building Ventilation System, isolate Control Center, and initiate emergency recirculation mode.

Note: Page content was last changed with ODCM Revision 17.

TABLE 7.0-2

Dose Factors for Noble Gases*

Nuclide	Total Body Gamma Dose Factor K_i (mrem/yr per $\mu Ci/m^3$)	Skin Beta Dose Factor L_i (mrem/yr per $\mu Ci/m^3$)	Gamma Air Dose Factor M_i (mrad/yr per $\mu Ci/m^3$)	Beta Air Dose Factor N_i (mrad/yr per $\mu Ci/m^3$)
Kr-83m	7.56E-02	-----	1.93E+01	2.88E+02
Kr-85m	1.17E+03	1.46E+03	1.23E+03	1.97E+03
Kr-85	1.61E+01	1.34E+03	1.72E+01	1.95E+03
Kr-87	5.92E+03	9.73E+03	6.17E+03	1.03E+04
Kr-88	1.47E+04	2.37E+03	1.52E+04	2.93E+03
Kr-89	1.66E+04	1.01E+04	1.73E+04	1.06E+04
Kr-90	1.56E+04	7.29E+03	1.63E+04	7.83E+03
Xe-131m	9.15E+01	4.76E+02	1.56E+02	1.11E+03
Xe-133m	2.51E+02	9.94E+02	3.27E+02	1.48E+03
Xe-133	2.94E+02	3.06E+02	3.53E+02	1.05E+03
Xe-135m	3.12E+03	7.11E+02	3.36E+03	7.39E+02
Xe-135	1.81E+03	1.86E+03	1.92E+03	2.46E+03
Xe-137	1.42E+03	1.22E+04	1.51E+03	1.27E+04
Xe-138	8.83E+03	4.13E+03	9.21E+03	4.75E+03
Ar-41	8.84E+03	2.69E+03	9.30E+03	3.28E+03

NOTE:

* Dose factors taken from NRC Regulatory Guide 1.109

TABLE 7.0-3

Controlling Locations, Pathways, and Atmospheric Dispersion for Dose Calculations*

ODCM Control	Location	Pathway(s)	Controlling Age Group	χ / Q (sec/m^3)	D/Q (1/m^2)
3.11.2.1a	site boundary (0.57 mi, NW)	noble gases direct exposure	N/A	RB: 1.25E-6 TB: 5.71E-6 RW: 2.66E-6	N/A
3.11.2.1b	site boundary (0.57 mi, NW)	inhalation	child	RB: 1.25E-6 TB: 5.71E-6 RW: 2.66E-6	N/A
3.11.2.2	site boundary (0.57 mi, NW)	gamma-air beta-air	N/A	RB: 1.25E-6 TB: 5.71E-6 RW: 2.66E-6	N/A
11.2.3	residence (0.67 mi, WNW)	vegetation inhalation, and ground plane	child	RB: 1.10E-6 TB: 4.02E-6 RW: 1.53E-6	1.59E-8 3.06E-8 1.76E-8

NOTE: *The identified controlling locations and pathways are derived from land use census data and dispersion and deposition factor data tables. The dispersion and deposition factor values listed are conservative values; they represent the highest annual average values seen at that location for a period of several years.

Table 7.0-4
Gaseous Effluent Pathway Dose Commitment Factors
R_{aipo}, Inhalation Pathway Dose Factors - ADULT
(mrem/yr per $\mu Ci/m^3$)

Nuclide	Bone	Liver	Thyroid	Kidney	Lung	GI-LLI	T.Body
H-3	-	1.26E+3	1.26E+3	1.26E+3	1.26E+3	1.26E+3	1.26E+3
C-14	1.82E+4	3.41E+3	3.41E+3	3.41E+3	3.41E+3	3.41E+3	3.41E+3
Na-24	1.02E+4	1.02E+4	1.02E+4	1.02E+4	1.02E+4	1.02E+4	1.02E+4
P-32	1.32E+6	7.71E+4	-	-	-	8.64E+4	5.01E+4
Cr-51	-	-	5.95E+1	2.28E+1	1.44E+4	3.32E+3	1.00E+2
Mn-54	-	3.96E+4	-	9.84E+3	1.40E+6	7.74E+4	6.30E+3
Mn-56	-	1.24E+0	-	1.30E+0	9.44E+3	2.02E+4	1.83E-1
Fe-55	2.46E+4	1.70E+4	-	-	7.21E+4	6.03E+3	3.94E+3
Fe-59	1.18E+4	2.78E+4	-	-	1.02E+6	1.88E+5	1.06E+4
Co-57	-	6.92E+2	-	-	3.70E+5	3.14E+4	6.71E+2
Co-58	-	1.58E+3	-	-	9.28E+5	1.06E+5	2.07E+3
Co-60	-	1.15E+4	-	-	5.97E+6	2.85E+5	1.48E+4
Ni-63	4.32E+5	3.14E+4	-	-	1.78E+5	1.34E+4	1.45E+4
Ni-65	1.54E+0	2.10E-1	-	-	5.60E+3	1.23E+4	9.12E-2
Cu-64	-	1.46E+0	-	4.62E+0	6.78E+3	4.90E+4	6.15E-1
Zn-65	3.24E+4	1.03E+5	-	6.90E+4	8.64E+5	5.34E+4	4.66E+4
Zn-69	3.38E-2	6.51E-2	-	4.22E-2	9.20E+2	1.63E+1	4.52E-3
Br-82	-	-	-	-	-	1.04E+4	1.35E+4
Br-83	-	-	-	-	-	2.32E+2	2.41E+2
Br-84	-	-	-	-	-	1.64E-3	3.13E+2
Br-85	-	-	-	-	-	-	1.28E+1
Rb-86	-	1.35E+5	-	-	-	1.66E+4	5.90E+4
Rb-88	-	3.87E+2	-	-	-	3.34E-9	1.93E+2
Rb-89	-	2.56E+2	-	-	-	-	1.70E+2
Sr-89	3.04E+5	-	-	-	1.40E+6	3.50E+5	8.72E+3
Sr-90	9.92E+7	-	-	-	9.60E+6	7.22E+5	6.10E+6
Sr-91	6.19E+1	-	-	-	3.65E+4	1.91E+5	2.50E+0
Sr-92	6.74E+0	-	-	-	1.65E+4	4.30E+4	2.91E-1
Y-90	2.09E+3	-	-	-	1.70E+5	5.06E+5	5.61E+1
Y-91m	2.61E-1	-	-	-	1.92E+3	1.33E+0	1.02E-2
Y-91	4.62E+5	-	-	-	1.70E+6	3.85E+5	1.24E+4
Y-92	1.03E+1	-	-	-	1.57E+4	7.35E+4	3.02E-1
Y-93	9.44E+1	-	-	-	4.85E+4	4.22E+5	2.61E+0
Zr-95	1.07E+5	3.44E+4	-	5.42E+4	1.77E+6	1.50E+5	2.33E+4
Zr-97	9.68E+1	1.96E+1	-	2.97E+1	7.87E+4	5.23E+5	9.04E+0
Nb-95	1.41E+4	7.82E+3	-	7.74E+3	5.05E+5	1.04E+5	4.21E+3
Nb-97	2.22E-1	5.62E-2	-	6.54E-2	2.40E+3	2.42E+2	2.05E-2
Mo-99	-	1.21E+2	-	2.91E+2	9.12E+4	2.48E+5	2.30E+1
Tc-99m	1.03E-3	2.91E-3	-	4.42E-2	7.64E+2	4.16E+3	3.70E-2
Tc-101	4.18E-5	6.02E-5	-	1.08E-3	3.99E+2	-	5.90E-4
Ru-103	1.53E+3	-	-	5.83E+3	5.05E+5	1.10E+5	6.58E+2
Ru-105	7.90E-1	-	-	1.02E+0	1.10E+4	4.82E+4	3.11E-1
Ru-106	6.91E+4	-	-	1.34E+5	9.36E+6	9.12E+5	8.72E+3
Rh-103m	-	-	-	-	-	-	-
Rh-106	-	-	-	-	-	-	-
Ag-110m	1.08E+4	1.00E+4	-	1.97E+4	4.63E+6	3.02E+5	5.94E+3
Sb-124	3.12E+4	5.89E+2	7.55E+1	-	2.48E+6	4.06E+5	1.24E+4
Sb-125	5.34E+4	5.95E+2	5.40E+1	-	1.74E+6	1.01E+5	1.26E+4
Te-125m	3.42E+3	1.58E+3	1.05E+3	1.24E+4	3.14E+5	7.06E+4	4.67E+2
Te-127m	1.26E+4	5.77E+3	3.29E+3	4.58E+4	9.60E+5	1.50E+5	1.57E+3
Te-127	1.40E+0	6.42E-1	1.06E+0	5.10E+0	6.51E+3	5.74E+4	3.10E-1
Te-129m	9.76E+3	4.67E+3	3.44E+3	3.66E+4	1.16E+6	3.83E+5	1.58E+3
Te-129	4.98E-2	2.39E-2	3.90E-2	1.87E-1	1.94E+3	1.57E+2	1.24E-2
Te-131m	6.99E+1	4.36E+1	5.50E+1	3.09E+2	1.40E+5	5.56E+5	2.90E+1
Te-131	1.11E-2	5.95E-3	9.36E-3	4.37E-2	1.39E+3	1.84E+1	3.59E-3
Te-132	2.60E+2	2.15E+2	1.90E+2	1.46E+3	2.88E+5	5.10E+5	1.62E+2
I-130	4.58E+3	1.34E+4	1.14E+6	2.09E+4	-	7.69E+3	5.28E+3
I-131	2.52E+4	3.58E+4	1.19E+7	6.13E+4	-	6.28E+3	2.05E+4
I-132	1.16E+3	3.26E+3	1.14E+5	5.18E+3	-	4.06E+2	1.16E+3
I-133	8.64E+3	1.48E+4	2.15E+6	2.58E+4	-	8.88E+3	4.52E+3

Table 7.0-4
Gaseous Effluent Pathway Dose Commitment Factors
R_{aipo}, Inhalation Pathway Dose Factors - ADULT (cont.)
(mrem/yr per $\mu Ci/m^3$)

Nuclide	Bone	Liver	Thyroid	Kidney	Lung	GI-LLI	T.Body
I-134	6.44E+2	1.73E+3	2.98E+4	2.75E+3	-	1.01E+0	6.15E+2
I-135	2.68E+3	6.98E+3	4.48E+5	1.11E+4	-	5.25E+3	2.57E+3
Cs-134	3.73E+5	8.48E+5	-	2.87E+5	9.76E+4	1.04E+4	7.28E+5
Cs-136	3.90E+4	1.46E+5	-	8.56E+4	1.20E+4	1.17E+4	1.10E+5
Cs-137	4.78E+5	6.21E+5	-	2.22E+5	7.52E+4	8.40E+3	4.28E+5
Cs-138	3.31E+2	6.21E+2	-	4.80E+2	4.86E+1	1.86E-3	3.24E+2
Ba-139	9.36E-1	6.66E-4	-	6.22E-4	3.76E+3	8.96E+2	2.74E-2
Ba-140	3.90E+4	4.90E+1	-	1.67E+1	1.27E+6	2.18E+5	2.57E+3
Ba-141	1.00E-1	7.53E-5	-	7.00E-5	1.94E+3	1.16E-7	3.36E-3
Ba-142	2.63E-2	2.70E-5	-	2.29E-5	1.19E+3	-	1.66E-3
La-140	3.44E+2	1.74E+2	-	-	1.36E+5	4.58E+5	4.58E+1
La-142	6.83E-1	3.10E-1	-	-	6.33E+3	2.11E+3	7.72E-2
Ce-141	1.99E+4	1.35E+4	-	6.26E+3	3.62E+5	1.20E+5	1.53E+3
Ce-143	1.86E+2	1.38E+2	-	6.08E+1	7.98E+4	2.26E+5	1.53E+1
Ce-144	3.43E+6	1.43E+6	-	8.48E+5	7.78E+6	8.16E+5	1.84E+5
Pr-143	9.36E+3	3.75E+3	-	2.16E+3	2.81E+5	2.00E+5	4.64E+2
Pr-144	3.01E-2	1.25E-2	-	7.05E-3	1.02E+3	2.15E-8	1.53E-3
Nd-147	5.27E+3	6.10E+3	-	3.56E+3	2.21E+5	1.73E+5	3.65E+2
W-187	8.48E+0	7.08E+0	-	-	2.90E+4	1.55E+5	2.48E+0
Np-239	2.30E+2	2.26E+1	-	7.00E+1	3.76E+4	1.19E+5	1.24E+1

Table 7.0-4

R_{aipo}, Inhalation Pathway Dose Factors - TEENAGER

(mrem/yr per μCi/m^3)

Nuclide	Bone	Liver	Thyroid	Kidney	Lung	GI-LLI	T.Body
H-3	-	1.27E+3	1.27E+3	1.27E+3	1.27E+3	1.27E+3	1.27E+3
C-14	2.60E+4	4.87E+3	4.87E+3	4.87E+3	4.87E+3	4.87E+3	4.87E+3
Na-24	1.38E+4	1.38E+4	1.38E+4	1.38E+4	1.38E+4	1.38E+4	1.38E+4
P-32	1.89E+6	1.10E+5	-	-	-	9.28E+4	7.16E+4
Cr-51	-	-	7.50E+1	3.07E+1	2.10E+4	3.00E+3	1.35E+2
Mn-54	-	5.11E+4	-	1.27E+4	1.98E+6	6.68E+4	8.40E+3
Mn-56	-	1.70E+0	-	1.79E+0	1.52E+4	5.74E+4	2.52E-1
Fe-55	3.34E+4	2.38E+4	-	-	1.24E+5	6.39E+3	5.54E+3
Fe-59	1.59E+4	3.70E+4	-	-	1.53E+6	1.78E+5	1.43E+4
Co-57	-	6.92E+2	-	-	5.86E+5	3.14E+4	9.20E+2
Co-58	-	2.07E+3	-	-	1.34E+6	9.52E+4	2.78E+3
Co-60	-	1.51E+4	-	-	8.72E+6	2.59E+5	1.98E+4
Ni-63	5.80E+5	4.34E+4	-	-	3.07E+5	1.42E+4	1.98E+4
Ni-65	2.18E+0	2.93E-1	-	-	9.36E+3	3.67E+4	1.27E-1
Cu-64	-	2.03E+0	-	6.41E+0	1.11E+4	6.14E+4	8.48E-1
Zn-65	3.86E+4	1.34E+5	-	8.64E+4	1.24E+6	4.66E+4	6.24E+4
Zn-69	4.83E-2	9.20E-2	-	6.02E-2	1.58E+3	2.85E+2	6.46E-3
Br-82	-	-	-	-	-	-	1.82E+4
Br-83	-	-	-	-	-	-	3.44E+2
Br-84	-	-	-	-	-	-	4.33E+2
Br-85	-	-	-	-	-	-	1.83E+1
Rb-86	-	1.90E+5	-	-	-	1.77E+4	8.40E+4
Rb-88	-	5.46E+2	-	-	-	2.92E-5	2.72E+2
Rb-89	-	3.52E+2	-	-	-	3.38E-7	2.33E+2
Sr-89	4.34E+5	-	-	-	2.42E+6	3.71E+5	1.25E+4
Sr-90	1.08E+8	-	-	-	1.65E+7	7.65E+5	6.68E+6
Sr-91	8.80E+1	-	-	-	6.07E+4	2.59E+5	3.51E+0
Sr-92	9.52E+0	-	-	-	2.74E+4	1.19E+5	4.06E-1
Y-90	2.98E+3	-	-	-	2.93E+5	5.59E+5	8.00E+1
Y-91m	3.70E-1	-	-	-	3.20E+3	3.02E+1	1.42E-2
Y-91	6.61E+5	-	-	-	2.94E+6	4.09E+5	1.77E+4
Y-92	1.47E+1	-	-	-	2.68E+4	1.65E+5	4.29E-1
Y-93	1.35E+2	-	-	-	8.32E+4	5.79E+5	3.72E+0
Zr-95	1.46E+5	4.58E+4	-	6.74E+4	2.69E+6	1.49E+5	3.15E+4
Zr-97	1.38E+2	2.72E+1	-	4.12E+1	1.30E+5	6.30E+5	1.26E+1
Nb-95	1.86E+4	1.03E+4	-	1.00E+4	7.51E+5	9.68E+4	5.66E+3
Nb-97	3.14E-1	7.78E-2	-	9.12E-2	3.93E+3	2.17E+3	2.84E-2
Mo-99	-	1.69E+2	-	4.11E+2	1.54E+5	2.69E+5	3.22E+1
Tc-99m	1.38E-3	3.86E-3	-	5.76E-2	1.15E+3	6.13E+3	4.99E-2
Tc-101	5.92E-5	8.40E-5	-	1.52E-3	6.67E+2	8.72E-7	8.24E-4
Ru-103	2.10E+3	-	-	7.43E+3	7.83E+5	1.09E+5	8.96E+2
Ru-105	1.12E+0	-	-	1.41E+0	1.82E+4	9.04E+4	4.34E-1
Ru-106	9.84E+4	-	-	1.90E+5	1.61E+7	9.60E+5	1.24E+4
Rh-103m	-	-	-	-	-	-	-
Rh-106	-	-	-	-	-	-	-
Ag-110m	1.38E+4	1.31E+4	-	2.50E+4	6.75E+6	2.73E+5	7.99E+3
Sb-124	4.30E+4	7.94E+2	9.76E+1	-	3.85E+6	3.98E+5	1.68E+4
Sb-125	7.38E+4	8.08E+2	7.04E+1	-	2.74E+6	9.92E+4	1.72E+4
Te-125m	4.88E+3	2.24E+3	1.40E+3	-	5.36E+5	7.50E+4	6.67E+2
Te-127m	1.80E+4	8.16E+3	4.38E+3	6.54E+4	1.66E+6	1.59E+5	2.18E+3
Te-127	2.01E+0	9.12E-1	1.42E+0	7.28E+0	1.12E+4	8.08E+4	4.42E-1
Te-129m	1.39E+4	6.58E+3	4.58E+3	5.19E+4	1.98E+6	4.05E+5	2.25E+3
Te-129	7.10E-2	3.38E-2	5.18E-2	2.66E-1	3.30E+3	1.62E+3	1.76E-2
Te-131m	9.84E+1	6.01E+1	7.25E+1	4.39E+2	2.38E+5	6.21E+5	4.02E+1
Te-131	1.58E-2	8.32E-3	1.24E-2	6.18E-2	2.34E+3	1.51E+1	5.04E-3
Te-132	3.60E+2	2.90E+2	2.46E+2	1.95E+3	4.49E+5	4.63E+5	2.19E+2
I-130	6.24E+3	1.79E+4	1.49E+6	2.75E+4	-	9.12E+3	7.17E+3
I-131	3.54E+4	4.91E+4	1.46E+7	8.40E+4	-	6.49E+3	2.64E+4
I-132	1.59E+3	4.38E+3	1.51E+5	6.92E+3	-	1.27E+3	1.58E+3
I-133	1.22E+4	2.05E+4	2.92E+6	3.59E+4	-	1.03E+4	6.22E+3

Table 7.0-4

R_{aipo}, Inhalation Pathway Dose Factors - TEENAGER (Cont.)

(mrem/yr per μCi/m^3)

Nuclide	Bone	Liver	Thyroid	Kidney	Lung	GI-LLI	T.Body
I-134	8.88E+2	2.32E+3	3.95E+4	3.66E+3	-	2.04E+1	8.40E+2
I-135	3.70E+3	9.44E+3	6.21E+5	1.49E+4	-	6.95E+3	3.49E+3
Cs-134	5.02E+5	1.13E+6	-	3.75E+5	1.46E+5	9.76E+3	5.49E+5
Cs-136	5.15E+4	1.94E+5	-	1.10E+5	1.78E+4	1.09E+4	1.37E+5
Cs-137	6.70E+5	8.48E+5	-	3.04E+5	1.21E+5	8.48E+3	3.11E+5
Cs-138	4.66E+2	8.56E+2	-	6.62E+2	7.87E+1	2.70E-1	4.46E+2
Ba-139	1.34E+0	9.44E-4	-	8.88E-4	6.46E+3	6.45E+3	3.90E-2
Ba-140	5.47E+4	6.70E+1	-	2.28E+1	2.03E+6	2.29E+5	3.52E+3
Ba-141	1.42E-1	1.06E-4	-	9.84E-5	3.29E+3	7.46E-4	4.74E-3
Ba-142	3.70E-2	3.70E-5	-	3.14E-5	1.91E+3	-	2.27E-3
La-140	4.79E+2	2.36E+2	-	-	2.14E+5	4.87E+5	6.26E+1
La-142	9.60E-1	4.25E-1	-	-	1.02E+4	1.20E+4	1.06E-1
Ce-141	2.84E+4	1.90E+4	-	8.88E+3	6.14E+5	1.26E+5	2.17E+3
Ce-143	2.66E+2	1.94E+2	-	8.64E+1	1.30E+5	2.55E+5	2.16E+1
Ce-144	4.89E+6	2.02E+6	-	1.21E+6	1.34E+7	8.64E+5	2.62E+5
Pr-143	1.34E+4	5.31E+3	-	3.09E+3	4.83E+5	2.14E+5	6.62E+2
Pr-144	4.30E-2	1.76E-2	-	1.01E-2	1.75E+3	2.35E-4	2.18E-3
Nd-147	7.86E+3	8.56E+3	-	5.02E+3	3.72E+5	1.82E+5	5.13E+2
W-187	1.20E+1	9.76E+0	-	-	4.74E+4	1.77E+5	3.43E+0
Np-239	3.38E+2	3.19E+1	-	1.00E+2	6.49E+4	1.32E+5	1.77E+1

Table 7.0-4
R_{aipo}, Inhalation Pathway Dose Factors - CHILD
(mrem/yr per μCi/m^3)

Nuclide	Bone	Liver	Thyroid	Kidney	Lung	GI-LLI	T.Body
H-3	-	1.12E+3	1.12E+3	1.12E+3	1.12E+3	1.12E+3	1.12E+3
C-14	3.59E+4	6.73E+3	6.73E+3	6.73E+3	6.73E+3	6.73E+3	6.73E+3
Na-24	1.61E+4	1.61E+4	1.61E+4	1.61E+4	1.61E+4	1.61E+4	1.61E+4
P-32	2.60E+6	1.14E+5	-	-	-	4.22E+4	9.88E+4
Cr-51	-	-	8.55E+1	2.43E+1	1.70E+4	1.08E+3	1.54E+2
Mn-54	-	4.29E+4	-	1.00E+4	1.58E+6	2.29E+4	9.51E+3
Mn-56	-	1.66E+0	-	1.67E+0	1.31E+4	1.23E+5	3.12E-1
Fe-55	4.74E+4	2.52E+4	-	-	1.11E+5	2.87E+3	7.77E+3
Fe-59	2.07E+4	3.34E+4	-	-	1.27E+6	7.07E+4	1.67E+4
Co-57	-	9.03E+2	-	-	5.07E+5	1.32E+4	1.07E+3
Co-58	-	1.77E+3	-	-	1.11E+6	3.44E+4	3.16E+3
Co-60	-	1.31E+4	-	-	7.07E+6	9.62E+4	2.26E+4
Ni-63	8.21E+5	4.63E+4	-	-	2.75E+5	6.33E+3	2.80E+4
Ni-65	2.99E+0	2.96E-1	-	-	8.18E+3	8.40E+4	1.64E-1
Cu-64	-	1.99E+0	-	6.03E+0	9.58E+3	3.67E+4	1.07E+0
Zn-65	4.26E+4	1.13E+5	-	7.14E+4	9.95E+5	1.63E+4	7.03E+4
Zn-69	6.70E-2	9.66E-2	-	5.85E-2	1.42E+3	1.02E+4	8.92E-3
Br-82	-	-	-	-	-	-	2.09E+4
Br-83	-	-	-	-	-	-	4.74E+2
Br-84	-	-	-	-	-	-	5.48E+2
Br-85	-	-	-	-	-	-	2.53E+1
Rb-86	-	1.98E+5	-	-	-	7.99E+3	1.14E+5
Rb-88	-	5.62E+2	-	-	-	1.72E+1	3.66E+2
Rb-89	-	3.45E+2	-	-	-	1.89E+0	2.90E+2
Sr-89	5.99E+5	-	-	-	2.16E+6	1.67E+5	1.72E+4
Sr-90	1.01E+8	-	-	-	1.48E+7	3.43E+5	6.44E+6
Sr-91	1.21E+2	-	-	-	5.33E+4	1.74E+5	4.59E+0
Sr-92	1.31E+1	-	-	-	2.40E+4	2.42E+5	5.25E-1
Y-90	4.11E+3	-	-	-	2.62E+5	2.68E+5	1.11E+2
Y-91m	5.07E-1	-	-	-	2.81E+3	1.72E+3	1.84E-2
Y-91	9.14E+5	-	-	-	2.63E+6	1.84E+5	2.44E+4
Y-92	2.04E+1	-	-	-	2.39E+4	2.39E+5	5.81E-1
Y-93	1.86E+2	-	-	-	7.44E+4	3.89E+5	5.11E+0
Zr-95	1.90E+5	4.18E+4	-	5.96E+4	2.23E+6	6.11E+4	3.70E+4
Zr-97	1.88E+2	2.72E+1	-	3.89E+1	1.13E+5	3.51E+5	1.60E+1
Nb-95	2.35E+4	9.18E+3	-	8.62E+3	6.14E+5	3.70E+4	6.55E+3
Nb-97	4.29E-1	7.70E-2	-	8.55E-2	3.42E+3	2.78E+4	3.60E-2
Mo-99	-	1.72E+2	-	3.92E+2	1.35E+5	1.27E+5	4.26E+1
Tc-99m	1.78E-3	3.48E-3	-	5.07E-2	9.51E+2	4.81E+3	5.77E-2
Tc-101	8.10E-5	8.51E-5	-	1.45E-3	5.85E+2	1.63E+1	1.08E-3
Ru-103	2.79E+3	-	-	7.03E+3	6.62E+5	4.48E+4	1.07E+3
Ru-105	1.53E+0	-	-	1.34E+0	1.59E+4	9.95E+4	5.55E-1
Ru-106	1.36E+5	-	-	1.84E+5	1.43E+7	4.29E+5	1.69E+4
Rh-103m	-	-	-	-	-	-	-
Rh-106	-	-	-	-	-	-	-
Ag-110m	1.69E+4	1.14E+4	-	2.12E+4	5.48E+6	1.00E+5	9.14E+3
Sb-124	5.74E+4	7.40E+2	1.26E+2	-	3.24E+6	1.64E+5	2.00E+4
Sb-125	9.84E+4	7.59E+2	9.10E+1	-	2.32E+6	4.03E+4	2.07E+4
Te-125m	6.73E+3	2.33E+3	1.92E+3	-	4.77E+5	3.38E+4	9.14E+2
Te-127m	2.49E+4	8.55E+3	6.07E+3	6.36E+4	1.48E+6	7.14E+4	3.02E+3
Te-127	2.77E+0	9.51E-1	1.96E+0	7.07E+0	1.00E+4	5.62E+4	6.11E-1
Te-129m	1.92E+4	6.85E+3	6.33E+3	5.03E+4	1.76E+6	1.82E+5	3.04E+3
Te-129	9.77E-2	3.50E-2	7.14E-2	2.57E-1	2.93E+3	2.55E+4	2.38E-2
Te-131m	1.34E+2	5.92E+1	9.77E+1	4.00E+2	2.06E+5	3.08E+5	5.07E+1
Te-131	2.17E-2	8.44E-3	1.70E-2	5.88E-2	2.05E+3	1.33E+3	6.59E-3
Te-132	4.81E+2	2.72E+2	3.17E+2	1.77E+3	3.77E+5	1.38E+5	2.63E+2
I-130	8.18E+3	1.64E+4	1.85E+6	2.45E+4	-	5.11E+3	8.44E+3
I-131	4.81E+4	4.81E+4	1.62E+7	7.88E+4	-	2.84E+3	2.73E+4
I-132	2.12E+3	4.07E+3	1.94E+5	6.25E+3	-	3.20E+3	1.88E+3
I-133	1.66E+4	2.03E+4	3.85E+6	3.38E+4	-	5.48E+3	7.70E+3

Table 7.0-4

R_{aipo}, Inhalation Pathway Dose Factors - CHILD (Cont.)

(mrem/yr per μCi/m^3)

Nuclide	Bone	Liver	Thyroid	Kidney	Lung	GI-LLI	T.Body
I-134	1.17E+3	2.16E+3	5.07E+4	3.30E+3	-	9.55E+2	9.95E+2
I-135	4.92E+3	8.73E+3	7.92E+5	1.34E+4	-	4.44E+3	4.14E+3
Cs-134	6.51E+5	1.01E+6	-	3.30E+5	1.21E+5	3.85E+3	2.25E+5
Cs-136	6.51E+4	1.71E+5	-	9.55E+4	1.45E+4	4.18E+3	1.16E+5
Cs-137	9.07E+5	8.25E+5	-	2.82E+5	1.04E+5	3.62E+3	1.28E+5
Cs-138	6.33E+2	8.40E+2	-	6.22E+2	6.81E+1	2.70E+2	5.55E+2
Ba-139	1.84E+0	9.84E-4	-	8.62E-4	5.77E+3	5.77E+4	5.37E-2
Ba-140	7.40E+4	6.48E+1	-	2.11E+1	1.74E+6	1.02E+5	4.33E+3
Ba-141	1.96E-1	1.09E-4	-	9.47E-5	2.92E+3	2.75E+2	6.36E-3
Ba-142	5.00E-2	3.60E-5	-	2.91E-5	1.64E+3	2.74E+0	2.79E-3
La-140	6.44E+2	2.25E+2	-	-	1.83E+5	2.26E+5	7.55E+1
La-142	1.30E+0	4.11E-1	-	-	8.70E+3	7.59E+4	1.29E-1
Ce-141	3.92E+4	1.95E+4	-	8.55E+3	5.44E+5	5.66E+4	2.90E+3
Ce-143	3.66E+2	1.99E+2	-	8.36E+1	1.15E+5	1.27E+5	2.87E+1
Ce-144	6.77E+6	2.12E+6	-	1.17E+6	1.20E+7	3.89E+5	3.61E+5
Pr-143	1.85E+4	5.55E+3	-	3.00E+3	4.33E+5	9.73E+4	9.14E+2
Pr-144	5.96E-2	1.85E-2	-	9.77E-3	1.57E+3	1.97E+2	3.00E-3
Nd-147	1.08E+4	8.73E+3	-	4.81E+3	3.28E+5	8.21E+4	6.81E+2
W-187	1.63E+1	9.66E+0	-	-	4.11E+4	9.10E+4	4.33E+0
Np-239	4.66E+2	3.34E+1	-	9.73E+1	5.81E+4	6.40E+4	2.35E+1

Table 7.0-4

R_{aipo}, Inhalation Pathway Dose Factors - INFANT

(mrem/yr per $\mu Ci/m^3$)

Nuclide	Bone	Liver	Thyroid	Kidney	Lung	GI-LLI	T.Body
H-3	-	6.47E+2	6.47E+2	6.47E+2	6.47E+2	6.47E+2	6.47E+2
C-14	2.65E+4	5.31E+3	5.31E+3	5.31E+3	5.31E+3	5.31E+3	5.31E+3
Na-24	1.06E+4	1.06E+4	1.06E+4	1.06E+4	1.06E+4	1.06E+4	1.06E+4
P-32	2.03E+6	1.12E+5	-	-	-	1.61E+4	7.74E+4
Cr-51	-	-	5.75E+1	1.32E+1	1.28E+4	3.57E+2	8.95E+1
Mn-54	-	2.53E+4	-	4.98E+3	1.00E+6	7.06E+3	4.98E+3
Mn-56	-	1.54E+0	-	1.10E+0	1.25E+4	7.17E+4	2.21E-1
Fe-55	1.97E+4	1.17E+4	-	-	8.69E+4	1.09E+3	3.33E+3
Fe-59	1.36E+4	2.35E+4	-	-	1.02E+6	2.48E+4	9.48E+3
Co-57	-	6.51E+2	-	-	3.79E+5	4.86E+3	6.41E+2
Co-58	-	1.22E+3	-	-	7.77E+5	1.11E+4	1.82E+3
Co-60	-	8.02E+3	-	-	4.51E+6	3.19E+4	1.18E+4
Ni-63	3.39E+5	2.04E+4	-	-	2.09E+5	2.42E+3	1.16E+4
Ni-65	2.39E+0	2.84E-1	-	-	8.12E+3	5.01E+4	1.23E-1
Cu-64	-	1.88E+0	-	3.98E+0	9.30E+3	1.50E+4	7.74E-1
Zn-65	1.93E+4	6.26E+4	-	3.25E+4	6.47E+5	5.14E+4	3.11E+4
Zn-69	5.39E-2	9.67E-2	-	4.02E-2	1.47E+3	1.32E+4	7.18E-3
Br-82	-	-	-	-	-	-	1.33E+4
Br-83	-	-	-	-	-	-	3.81E+2
Br-84	-	-	-	-	-	-	4.00E+2
Br-85	-	-	-	-	-	-	2.04E+1
Rb-86	-	1.90E+5	-	-	-	3.04E+3	8.82E+4
Rb-88	-	5.57E+2	-	-	-	3.39E+2	2.87E+2
Rb-89	-	3.21E+2	-	-	-	6.82E+1	2.06E+2
Sr-89	3.98E+5	-	-	-	2.03E+6	6.40E+4	1.14E+4
Sr-90	4.09E+7	-	-	-	1.12E+7	1.31E+5	2.59E+6
Sr-91	9.56E+1	-	-	-	5.26E+4	7.34E+4	3.46E+0
Sr-92	1.05E+1	-	-	-	2.38E+4	1.40E+5	3.91E-1
Y-90	3.29E+3	-	-	-	2.69E+5	1.04E+5	8.82E+1
Y-91m	4.07E-1	-	-	-	2.79E+3	2.35E+3	1.39E-2
Y-91	5.88E+5	-	-	-	2.45E+6	7.03E+4	1.57E+4
Y-92	1.64E+1	-	-	-	2.45E+4	1.27E+5	4.61E-1
Y-93	1.50E+2	-	-	-	7.64E+4	1.67E+5	4.07E+0
Zr-95	1.15E+5	2.79E+4	-	3.11E+4	1.75E+6	2.17E+4	2.03E+4
Zr-97	1.50E+2	2.56E+1	-	2.59E+1	1.10E+5	1.40E+5	1.17E+1
Nb-95	1.57E+4	6.43E+3	-	4.72E+3	4.79E+5	1.27E+4	3.78E+3
Nb-97	3.42E-1	7.29E-2	-	5.70E-2	3.32E+3	2.69E+4	2.63E-2
Mo-99	-	1.65E+2	-	2.65E+2	1.35E+5	4.87E+4	3.23E+1
Tc-99m	1.40E-3	2.88E-3	-	3.11E-2	8.11E+2	2.03E+3	3.72E-2
Tc-101	6.51E-5	8.23E-5	-	9.79E-4	5.84E+2	8.44E+2	8.12E-4
Ru-103	2.02E+3	-	-	4.24E+3	5.52E+5	1.61E+4	6.79E+2
Ru-105	1.22E+0	-	-	8.99E-1	1.57E+4	4.84E+4	4.10E-1
Ru-106	8.68E+4	-	-	1.07E+5	1.16E+7	1.64E+5	1.09E+4
Rh-103m	-	-	-	-	-	-	-
Rh-106	-	-	-	-	-	-	-
Ag-110m	9.98E+3	7.22E+3	-	1.09E+4	3.67E+6	3.30E+4	5.00E+3
Sb-124	3.79E+4	5.56E+2	1.01E+2	-	2.65E+6	5.91E+4	1.20E+4
Sb-125	5.17E+4	4.77E+2	6.23E+1	-	1.64E+6	1.47E+4	1.09E+4
Te-125m	4.76E+3	1.99E+3	1.62E+3	-	4.47E+5	1.29E+4	6.58E+2
Te-127m	1.67E+4	6.90E+3	4.87E+3	3.75E+4	1.31E+6	2.73E+4	2.07E+3
Te-127	2.23E+0	9.53E-1	1.85E+0	4.86E+0	1.03E+4	2.44E+4	4.89E-1
Te-129m	1.41E+4	6.09E+3	5.47E+3	3.18E+4	1.68E+6	6.90E+4	2.23E+3
Te-129	7.88E-2	3.47E-2	6.75E-2	1.75E-1	3.00E+3	2.63E+4	1.88E-2
Te-131m	1.07E+2	5.50E+1	8.93E+1	2.65E+2	1.99E+5	1.19E+5	3.63E+1
Te-131	1.74E-2	8.22E-3	1.58E-2	3.99E-2	2.06E+3	8.22E+3	5.00E-3
Te-132	3.72E+2	2.37E+2	2.79E+2	1.03E+3	3.40E+5	4.41E+4	1.76E+2
I-130	6.36E+3	1.39E+4	1.60E+6	1.53E+4	-	1.99E+3	5.57E+3
I-131	3.79E+4	4.44E+4	1.48E+7	5.18E+4	-	1.06E+3	1.96E+4
I-132	1.69E+3	3.54E+3	1.69E+5	3.95E+3	-	1.90E+3	1.26E+3
I-133	1.32E+4	1.92E+4	3.56E+6	2.24E+4	-	2.16E+3	5.60E+3

Table 7.0-4
R_{aipo}, Inhalation Pathway Dose Factors - INFANT (Cont.)
(mrem/yr per $\mu Ci/m^3$)

Nuclide	Bone	Liver	Thyroid	Kidney	Lung	GI-LLI	T.Body
I-134	9.21E+2	1.88E+3	4.45E+4	2.09E+3	-	1.29E+3	6.65E+2
I-135	3.86E+3	7.60E+3	6.96E+5	8.47E+3	-	1.83E+3	2.77E+3
Cs-134	3.96E+5	7.03E+5	-	1.90E+5	7.97E+4	1.33E+3	7.45E+4
Cs-136	4.83E+4	1.35E+5	-	5.64E+4	1.18E+4	1.43E+3	5.29E+4
Cs-137	5.49E+5	6.12E+5	-	1.72E+5	7.13E+4	1.33E+3	4.55E+4
Cs-138	5.05E+2	7.81E+2	-	4.10E+2	6.54E+1	8.76E+2	3.98E+2
Ba-139	1.48E+0	9.84E-4	-	5.92E-4	5.95E+3	5.10E+4	4.30E-2
Ba-140	5.60E+4	5.60E+1	-	1.34E+1	1.60E+6	3.84E+4	2.90E+3
Ba-141	1.57E-1	1.08E-4	-	6.50E-5	2.97E+3	4.75E+3	4.97E-3
Ba-142	3.98E-2	3.30E-5	-	1.90E-5	1.55E+3	6.93E+2	1.96E-3
La-140	5.05E+2	2.00E+2	-	-	1.68E+5	8.48E+4	5.15E+1
La-142	1.03E+0	3.77E-1	-	-	8.22E+3	5.95E+4	9.04E-2
Ce-141	2.77E+4	1.67E+4	-	5.25E+3	5.17E+5	2.16E+4	1.99E+3
Ce-143	2.93E+2	1.93E+2	-	5.64E+1	1.16E+5	4.97E+4	2.21E+1
Ce-144	3.19E+6	1.21E+6	-	5.38E+5	9.84E+6	1.48E+5	1.76E+5
Pr-143	1.40E+4	5.24E+3	-	1.97E+3	4.33E+5	3.72E+4	6.99E+2
Pr-144	4.79E-2	1.85E-2	-	6.72E-3	1.61E+3	4.28E+3	2.41E-3
Nd-147	7.94E+3	8.13E+3	-	3.15E+3	3.22E+5	3.12E+4	5.00E+2
W-187	1.30E+1	9.02E+0	-	-	3.96E+4	3.56E+4	3.12E+0
Np-239	3.71E+2	3.32E+1	-	6.62E+1	5.95E+4	2.49E+4	1.88E+1

Table 7.0-4

R_{aipo}, Grass-Cow-Milk Pathway Dose Factors - ADULT

(mrem/yr per μCi/m^3) for H-3 and C-14

(m^2 x mrem/yr per μCi/sec) for others

Nuclide	Bone	Liver	Thyroid	Kidney	Lung	GI-LLI	T.Body
H-3	-	7.63E+2	7.63E+2	7.63E+2	7.63E+2	7.63E+2	7.63E+2
C-14	3.63E+5	7.26E+4	7.26E+4	7.26E+4	7.26E+4	7.26E+4	7.26E+4
Na-24	2.54E+6	2.54E+6	2.54E+6	2.54E+6	2.54E+6	2.54E+6	2.54E+6
P-32	1.71E+10	1.06E+9	-	-	-	1.92E+9	6.60E+8
Cr-51	-	-	1.71E+4	6.30E+3	3.80E+4	7.20E+6	2.86E+4
Mn-54	-	8.40E+6	-	2.50E+6	-	2.57E+7	1.60E+6
Mn-56	-	4.23E-3	-	5.38E-3	-	1.35E-1	7.51E-4
Fe-55	2.51E+7	1.73E+7	-	-	9.67E+6	9.95E+6	4.04E+6
Fe-59	2.98E+7	7.00E+7	-	-	1.95E+7	2.33E+8	2.68E+7
Co-57	-	1.28E+6	-	-	-	3.25E+7	2.13E+6
Co-58	-	4.72E+6	-	-	-	9.57E+7	1.06E+7
Co-60	-	1.64E+7	-	-	-	3.08E+8	3.62E+7
Ni-63	6.73E+9	4.66E+8	-	-	-	9.73E+7	2.26E+8
Ni-65	3.70E-1	4.81E-2	-	-	-	1.22E+0	2.19E-2
Cu-64	-	2.41E+4	-	6.08E+4	-	2.05E+6	1.13E+4
Zn-65	1.37E+9	4.36E+9	-	2.92E+9	-	2.75E+9	1.97E+9
Zn-69	-	-	-	-	-	-	-
Br-82	-	-	-	-	-	3.72E+7	3.25E+7
Br-83	-	-	-	-	-	1.49E-1	1.03E-1
Br-84	-	-	-	-	-	-	-
Br-85	-	-	-	-	-	-	-
Rb-86	-	2.59E+9	-	-	-	5.11E+8	1.21E+9
Rb-88	-	-	-	-	-	-	-
Rb-89	-	-	-	-	-	-	-
Sr-89	1.45E+9	-	-	-	-	2.33E+8	4.16E+7
Sr-90	4.68E+10	-	-	-	-	1.35E+9	1.15E+10
Sr-91	3.13E+4	-	-	-	-	1.49E+5	1.27E+3
Sr-92	4.89E-1	-	-	-	-	9.68E+0	2.11E-2
Y-90	7.07E+1	-	-	-	-	7.50E+5	1.90E+0
Y-91m	-	-	-	-	-	-	-
Y-91	8.60E+3	-	-	-	-	4.73E+6	2.30E+2
Y-92	5.42E-5	-	-	-	-	9.49E-1	1.58E-6
Y-93	2.33E-1	-	-	-	-	7.39E+3	6.43E-3
Zr-95	9.46E+2	3.03E+2	-	4.76E+2	-	9.62E+5	2.05E+2
Zr-97	4.26E-1	8.59E-2	-	1.30E-1	-	2.66E+4	3.93E-2
Nb-95	8.25E+4	4.59E+4	-	4.54E+4	-	2.79E+8	2.47E+4
Nb-97	-	-	-	-	-	5.47E-9	-
Mo-99	-	2.52E+7	-	5.72E+7	-	5.85E+7	4.80E+6
Tc-99m	3.25E+0	9.19E+0	-	1.40E+2	4.50E+0	5.44E+3	1.17E+2
Tc-101	-	-	-	-	-	-	-
Ru-103	1.02E+3	-	-	3.89E+3	-	1.19E+5	4.39E+2
Ru-105	8.57E-4	-	-	1.11E-2	-	5.24E-1	3.38E-4
Ru-106	2.04E+4	-	-	3.94E+4	-	1.32E+6	2.58E+3
Rh-103m	-	-	-	-	-	-	-
Rh-106	-	-	-	-	-	-	-
Ag-110m	5.83E+7	5.39E+7	-	1.06E+8	-	2.20E+10	3.20E+7
Sb-124	2.57E+7	4.86E+5	6.24E+4	-	2.00E+7	7.31E+8	1.02E+7
Sb-125	2.04E+7	2.28E+5	2.08E+4	-	1.58E+7	2.25E+8	4.86E+6
Te-125m	1.63E+7	5.90E+6	4.90E+6	6.63E+7	-	6.50E+7	2.18E+6
Te-127m	4.58E+7	1.64E+7	1.17E+7	1.86E+8	-	1.54E+8	5.58E+6
Te-127	6.72E+2	2.41E+2	4.98E+2	2.74E+3	-	5.30E+4	1.45E+2
Te-129m	6.04E+7	2.25E+7	2.08E+7	2.52E+8	-	3.04E+8	9.57E+6
Te-129	-	-	-	-	-	-	-
Te-131m	3.61E+5	1.77E+5	2.80E+5	1.79E+6	-	1.75E+7	1.47E+5
Te-131	-	-	-	-	-	-	-
Te-132	2.39E+6	1.55E+6	1.71E+6	1.49E+7	-	7.32E+7	1.45E+6
I-130	4.26E+5	1.26E+6	1.07E+8	1.96E+6	-	1.08E+6	4.96E+5
I-131	2.96E+8	4.24E+8	1.39E+11	7.27E+8	-	1.12E+8	2.43E+8
I-132	1.64E-1	4.37E-1	1.53E+1	6.97E-1	-	8.22E-2	1.53E-1
I-133	3.97E+6	6.90E+6	1.01E+9	1.20E+7	-	6.20E+6	2.10E+6

Table 7.0-4

R_{aipo}, Grass-Cow-Milk Pathway Dose Factors - ADULT (CONT.)

(mrem/yr per μCi/m^3) for H-3 and C-14

(m^2 x mrem/yr per μCi/sec) for others

Nuclide	Bone	Liver	Thyroid	Kidney	Lung	GI-LLI	T.Body
I-134	-	-	-	-	-	-	-
I-135	1.39E+4	3.63E+4	2.40E+6	5.83E+4	-	4.10E+4	1.34E+4
Cs-134	5.65E+9	1.34E+10	-	4.35E+9	1.44E+9	2.35E+8	1.10E+10
Cs-136	2.61E+8	1.03E+9	-	5.74E+8	7.87E+7	1.17E+8	7.42E+8
Cs-137	7.38E+9	1.01E+10	-	3.43E+9	1.14E+9	1.95E+8	6.61E+9
Cs-138	-	-	-	-	-	-	-
Ba-139	4.70E-8	-	-	-	-	8.34E-8	1.38E-9
Ba-140	2.69E+7	3.38E+4	-	1.15E+4	1.93E+4	5.54E+7	1.76E+6
Ba-141	-	-	-	-	-	-	-
Ba-142	-	-	-	-	-	-	-
La-140	4.49E+0	2.26E+0	-	-	-	1.66E+5	5.97E-1
La-142	-	-	-	-	-	3.03E-8	-
Ce-141	4.84E+3	3.27E+3	-	1.52E+3	-	1.25E+7	3.71E+2
Ce-143	4.19E+1	3.09E+4	-	1.36E+1	-	1.16E+6	3.42E+0
Ce-144	3.58E+5	1.50E+5	-	8.87E+4	-	1.21E+8	1.92E+4
Pr-143	1.59E+2	6.37E+1	-	3.68E+1	-	6.96E+5	7.88E+0
Pr-144	-	-	-	-	-	-	-
Nd-147	9.42E+1	1.09E+2	-	6.37E+1	-	5.23E+5	6.52E+0
W-187	6.56E+3	5.48E+3	-	-	-	1.80E+6	1.92E+3
Np-239	3.66E+0	3.60E-1	-	1.12E+0	-	7.39E+4	1.98E-1

Table 7.0-4

R_{aipo}, Grass-Cow-Milk Pathway Dose Factors - TEENAGER

(mrem/yr per μCi/m^3) for H-3 and C-14

(m^2 x mrem/yr per μCi/sec) for others

Nuclide	Bone	Liver	Thyroid	Kidney	Lung	GI-LLI	T.Body
H-3	-	9.94E+2	9.94E+2	9.94E+2	9.94E+2	9.94E+2	9.94E+2
C-14	6.70E+5	1.34E+5	1.34E+5	1.34E+5	1.34E+5	1.34E+5	1.34E+5
Na-24	4.44E+6	4.44E+6	4.44E+6	4.44E+6	4.44E+6	4.44E+6	4.44E+6
P-32	3.15E+10	1.95E+9	-	-	-	2.65E+9	1.22E+9
Cr-51	-	-	2.78E+4	1.10E+4	7.13E+4	8.40E+6	5.00E+4
Mn-54	-	1.40E+7	-	4.17E+6	-	2.87E+7	2.78E+6
Mn-56	-	7.51E-3	-	9.50E-3	-	4.94E-1	1.33E-3
Fe-55	4.45E+7	3.16E+7	-	-	2.00E+7	1.37E+7	7.36E+6
Fe-59	5.20E+7	1.21E+8	-	-	3.82E+7	2.87E+8	4.68E+7
Co-57	-	2.25E+6	-	-	-	4.19E+7	3.76E+6
Co-58	-	7.95E+6	-	-	-	1.10E+8	1.83E+7
Co-60	-	2.78E+7	-	-	-	3.62E+8	6.26E+7
Ni-63	1.18E+10	8.35E+8	-	-	-	1.33E+8	4.01E+8
Ni-65	6.78E-1	8.66E-2	-	-	-	4.70E+0	3.94E-2
Cu-64	-	4.29E+4	-	1.09E+5	-	3.33E+6	2.02E+4
Zn-65	2.11E+9	7.31E+9	-	4.68E+9	-	3.10E+9	3.41E+9
Zn-69	-	-	-	-	-	-	-
Br-82	-	-	-	-	-	-	5.64E+7
Br-83	-	-	-	-	-	-	1.91E-1
Br-84	-	-	-	-	-	-	-
Br-85	-	-	-	-	-	-	-
Rb-86	-	4.73E+9	-	-	-	7.00E+8	2.22E+9
Rb-88	-	-	-	-	-	-	-
Rb-89	-	-	-	-	-	-	-
Sr-89	2.67E+9	-	-	-	-	3.18E+8	7.66E+7
Sr-90	6.61E+10	-	-	-	-	1.86E+9	1.63E+10
Sr-91	5.75E+4	-	-	-	-	2.61E+5	2.29E+3
Sr-92	8.95E-1	-	-	-	-	2.28E+1	3.81E-2
Y-90	1.30E+2	-	-	-	-	1.07E+6	3.50E+0
Y-91m	-	-	-	-	-	-	-
Y-91	1.58E+4	-	-	-	-	6.48E+6	4.24E+2
Y-92	1.00E-4	-	-	-	-	2.75E+0	2.90E-6
Y-93	4.30E-1	-	-	-	-	1.31E+4	1.18E-2
Zr-95	1.65E+3	5.22E+2	-	7.67E+2	-	1.20E+6	3.59E+2
Zr-97	7.75E-1	1.53E-1	-	2.32E-1	-	4.15E+4	7.06E-2
Nb-95	1.41E+5	7.80E+4	-	7.57E+4	-	3.34E+8	4.30E+4
Nb-97	-	-	-	-	-	6.34E-8	-
Mo-99	-	4.56E+7	-	1.04E+8	-	8.16E+7	8.69E+6
Tc-99m	5.64E+0	1.57E+1	-	2.34E+2	8.73E+0	1.03E+4	2.04E+2
Tc-101	-	-	-	-	-	-	-
Ru-103	1.81E+3	-	-	6.40E+3	-	1.52E+5	7.75E+2
Ru-105	1.57E-3	-	-	1.97E-2	-	1.26E+0	6.08E-4
Ru-106	3.75E+4	-	-	7.23E+4	-	1.80E+6	4.73E+3
Rh-103m	-	-	-	-	-	-	-
Rh-106	-	-	-	-	-	-	-
Ag-110m	9.63E+7	9.11E+7	-	1.74E+8	-	2.56E+10	5.54E+7
Sb-124	4.59E+7	8.46E+5	1.04E+5	-	4.01E+7	9.25E+8	1.79E+7
Sb-125	3.65E+7	3.99E+5	3.49E+4	-	3.21E+7	2.84E+8	8.54E+6
Te-125m	3.00E+7	1.08E+7	8.39E+6	-	-	8.86E+7	4.02E+6
Te-127m	8.44E+7	2.99E+7	2.01E+7	3.42E+8	-	2.10E+8	1.00E+7
Te-127	1.24E+3	4.41E+2	8.59E+2	5.04E+3	-	9.61E+4	2.68E+2
Te-129m	1.11E+8	4.10E+7	3.57E+7	4.62E+8	-	4.15E+8	1.75E+7
Te-129	-	-	-	1.67E-9	-	2.18E-9	-
Te-131m	6.57E+5	3.15E+5	4.74E+5	3.29E+6	-	2.53E+7	2.63E+5
Te-131	-	-	-	-	-	-	-
Te-132	4.28E+6	2.71E+6	2.86E+6	2.60E+7	-	8.58E+7	2.55E+6
I-130	7.49E+5	2.17E+6	1.77E+8	3.34E+6	-	1.67E+6	8.66E+5
I-131	5.38E+8	7.53E+8	2.20E+11	1.30E+9	-	1.49E+8	4.04E+8
I-132	2.90E-1	7.59E-1	2.56E+1	1.20E+0	-	3.31E-1	2.72E-1
I-133	7.24E+6	1.23E+7	1.72E+9	2.15E+7	-	9.30E+6	3.75E+6

Table 7.0-4

R_{aipo}, Grass-Cow Milk-Pathway Dose Factors - TEENAGER (Cont.)

(mrem/yr per μCi/m^3) for H-3 and C-14

(m^2 x mrem/yr per μCi/sec) for others

Nuclide	Bone	Liver	Thyroid	Kidney	Lung	GI-LLI	T.Body
I-134	-	-	-	-	-	-	-
I-135	2.47E+4	6.35E+4	4.08E+6	1.00E+5	-	7.03E+4	2.35E+4
Cs-134	9.81E+9	2.31E+10	-	7.34E+9	2.80E+9	2.87E+8	1.07E+10
Cs-136	4.45E+8	1.75E+9	-	9.53E+8	1.50E+8	1.41E+8	1.18E+9
Cs-137	1.34E+10	1.78E+10	-	6.06E+9	2.35E+9	2.53E+8	6.20E+9
Cs-138	-	-	-	-	-	-	-
Ba-139	8.69E-8	-	-	-	-	7.75E-7	2.53E-9
Ba-140	4.85E+7	5.95E+4	-	2.02E+4	4.00E+4	7.49E+7	3.13E+6
Ba-141	-	-	-	-	-	-	-
Ba-142	-	-	-	-	-	-	-
La-140	8.06E+0	3.96E+0	-	-	-	2.27E+5	1.05E+0
La-142	-	-	-	-	-	2.23E-7	-
Ce-141	8.87E+3	5.92E+3	-	2.79E+3	-	1.69E+7	6.81E+2
Ce-143	7.69E+1	5.60E+4	-	2.51E+1	-	1.68E+6	6.25E+0
Ce-144	6.58E+5	2.72E+5	-	1.63E+5	-	1.66E+8	3.54E+4
Pr-143	2.92E+2	1.17E+2	-	6.77E+1	-	9.61E+5	1.45E+1
Pr-144	-	-	-	-	-	-	-
Nd-147	1.81E+2	1.97E+2	-	1.16E+2	-	7.11E+5	1.18E+1
W-187	1.20E+4	9.78E+3	-	-	-	2.65E+6	3.43E+3
Np-239	6.99E+0	6.59E-1	-	2.07E+0	-	1.06E+5	3.66E-1

Table 7.0-4

R_{aipo}, Grass-Cow-Milk Pathway Dose Factors - CHILD

(mrem/yr per μCi/m^3) for H-3 and C-14

(m^2 x mrem/yr per μCi/sec) for others

Nuclide	Bone	Liver	Thyroid	Kidney	Lung	GI-LLI	T.Body
H-3	-	1.57E+3	1.57E+3	1.57E+3	1.57E+3	1.57E+3	1.57E+3
C-14	1.65E+6	3.29E+5	3.29E+5	3.29E+5	3.29E+5	3.29E+5	3.29E+5
Na-24	9.23E+6	9.23E+6	9.23E+6	9.23E+6	9.23E+6	9.23E+6	9.23E+6
P-32	7.77E+10	3.64E+9	-	-	-	2.15E+9	3.00E+9
Cr-51	-	-	5.66E+4	1.55E+4	1.03E+5	5.41E+6	1.02E+5
Mn-54	-	2.09E+7	-	5.87E+6	-	1.76E+7	5.58E+6
Mn-56	-	1.31E-2	-	1.58E-2	-	1.90E+0	2.95E-3
Fe-55	1.12E+8	5.93E+7	-	-	3.35E+7	1.10E+7	1.84E+7
Fe-59	1.20E+8	1.95E+8	-	-	5.65E+7	2.03E+8	9.71E+7
Co-57	-	3.84E+6	-	-	-	3.14E+7	7.77E+6
Co-58	-	1.21E+7	-	-	-	7.08E+7	3.72E+7
Co-60	-	4.32E+7	-	-	-	2.39E+8	1.27E+8
Ni-63	2.96E+10	1.59E+9	-	-	-	1.07E+8	1.01E+9
Ni-65	1.66E+0	1.56E-1	-	-	-	1.91E+1	9.11E-2
Cu-64	-	7.55E+4	-	1.82E+5	-	3.54E+6	4.56E+4
Zn-65	4.13E+9	1.10E+10	-	6.94E+9	-	1.93E+9	6.85E+9
Zn-69	-	-	-	-	-	2.14E-9	-
Br-82	-	-	-	-	-	-	1.15E+8
Br-83	-	-	-	-	-	-	4.69E-1
Br-84	-	-	-	-	-	-	-
Br-85	-	-	-	-	-	-	-
Rb-86	-	8.77E+9	-	-	-	5.64E+8	5.39E+9
Rb-88	-	-	-	-	-	-	-
Rb-89	-	-	-	-	-	-	-
Sr-89	6.62E+9	-	-	-	-	2.56E+8	1.89E+8
Sr-90	1.12E+11	-	-	-	-	1.51E+9	2.83E+10
Sr-91	1.41E+5	-	-	-	-	3.12E+5	5.33E+3
Sr-92	2.19E+0	-	-	-	-	4.14E+1	8.76E-2
Y-90	3.22E+2	-	-	-	-	9.15E+5	8.61E+0
Y-91m	-	-	-	-	-	-	-
Y-91	3.91E+4	-	-	-	-	5.21E+6	1.04E+3
Y-92	2.46E-4	-	-	-	-	7.10E+0	7.03E-6
Y-93	1.06E+0	-	-	-	-	1.57E+4	2.90E-2
Zr-95	3.84E+3	8.45E+2	-	1.21E+3	-	8.81E+5	7.52E+2
Zr-97	1.89E+0	2.72E-1	-	3.91E-1	-	4.13E+4	1.61E-1
Nb-95	3.18E+5	1.24E+5	-	1.16E+5	-	2.29E+8	8.84E+4
Nb-97	-	-	-	-	-	1.45E-6	-
Mo-99	-	8.29E+7	-	1.77E+8	-	6.86E+7	2.05E+7
Tc-99m	1.29E+1	2.54E+1	-	3.68E+2	1.29E+1	1.44E+4	4.20E+2
Tc-101	-	-	-	-	-	-	-
Ru-103	4.29E+3	-	-	1.08E+4	-	1.11E+5	1.65E+3
Ru-105	3.82E-3	-	-	3.36E-2	-	2.49E+0	1.39E-3
Ru-106	9.24E+4	-	-	1.25E+5	-	1.44E+6	1.15E+4
Rh-103m	-	-	-	-	-	-	-
Rh-106	-	-	-	-	-	-	-
Ag-110m	2.09E+8	1.41E+8	-	2.63E+8	-	1.68E+10	1.13E+8
Sb-124	1.09E+8	1.41E+8	2.40E+5	-	6.03E+7	6.79E+8	3.81E+7
Sb-125	8.70E+7	1.41E+6	8.06E+4	-	4.85E+7	2.08E+8	1.82E+7
Te-125m	7.38E+7	2.00E+7	2.07E+7	-	-	7.12E+7	9.84E+6
Te-127m	2.08E+8	5.60E+7	4.97E+7	5.93E+8	-	1.68E+8	2.47E+7
Te-127	3.06E+3	8.25E+2	2.12E+3	8.71E+3	-	1.20E+5	6.56E+2
Te-129m	2.72E+8	7.61E+7	8.78E+7	8.00E+8	-	3.32E+8	4.23E+7
Te-129	-	-	-	2.87E-9	-	6.12E-8	-
Te-131m	1.60E+6	5.53E+5	1.14E+6	5.35E+6	-	2.24E+7	5.89E+5
Te-131	-	-	-	-	-	-	-
Te-132	1.02E+7	4.52E+6	6.58E+6	4.20E+7	-	4.55E+7	5.46E+6
I-130	1.75E+6	3.54E+6	3.90E+8	5.29E+6	-	1.66E+6	1.82E+6
I-131	1.30E+9	1.31E+9	4.34E+11	2.15E+9	-	1.17E+8	7.46E+8
I-132	6.86E-1	1.26E+0	5.85E+1	1.93E+0	-	1.48E+0	5.80E-1
I-133	1.76E+7	2.18E+7	4.04E+9	3.63E+7	-	8.77E+6	8.23E+6

Table 7.0-4

R_{aipo}, Grass-Cow-Milk Pathway Dose Factors - CHILD (CONT.)

(mrem/yr per μCi/m^3) for H-3 and C-14

(m^2 x mrem/yr per μCi/sec) for others

Nuclide	Bone	Liver	Thyroid	Kidney	Lung	GI-LLI	T.Body
I-134	-	-	-	-	-	-	-
I-135	5.84E+4	1.05E+5	9.30E+6	1.61E+5	-	8.00E+4	4.97E+4
Cs-134	2.26E+10	3.71E+10	-	1.15E+10	4.13E+9	2.00E+8	7.83E+9
Cs-136	1.00E+9	2.76E+9	-	1.47E+9	2.19E+8	9.70E+7	1.79E+9
Cs-137	3.22E+10	3.09E+10	-	1.01E+10	3.62E+9	1.93E+8	4.55E+9
Cs-138	-	-	-	-	-	-	-
Ba-139	2.14E-7	-	-	-	-	1.23E-5	6.19E-9
Ba-140	1.17E+8	1.03E+5	-	3.34E+4	6.12E+4	5.94E+7	6.84E+6
Ba-141	-	-	-	-	-	-	-
Ba-142	-	-	-	-	-	-	-
La-140	1.93E+1	6.74E+0	-	-	-	1.88E+5	2.27E+0
La-142	-	-	-	-	-	2.51E-6	-
Ce-141	2.19E+4	1.09E+4	-	4.78E+3	-	1.36E+7	1.62E+3
Ce-143	1.89E+2	1.02E+5	-	4.29E+1	-	1.50E+6	1.48E+1
Ce-144	1.62E+6	5.09E+5	-	2.82E+5	-	1.33E+8	8.66E+4
Pr-143	7.23E+2	2.17E+2	-	1.17E+2	-	7.80E+5	3.59E+1
Pr-144	-	-	-	-	-	-	-
Nd-147	4.45E+2	3.60E+2	-	1.98E+2	-	5.71E+5	2.79E+1
W-187	2.91E+4	1.72E+4	-	-	-	2.42E+6	7.73E+3
Np-239	1.72E+1	1.23E+0	-	3.57E+0	-	9.14E+4	8.68E-1

Table 7.0-4

R_{aipo}, Grass-Cow-Milk Pathway Dose Factors - INFANT

(mrem/yr per μCi/m^3) for H-3 and C-14

(m^2 x mrem/yr per μCi/sec) for others

Nuclide	Bone	Liver	Thyroid	Kidney	Lung	GI-LLI	T.Body
H-3	-	2.38E+3	2.38E+3	2.38E+3	2.38E+3	2.38E+3	2.38E+3
C-14	3.23E+6	6.89E+5	6.89E+5	6.89E+5	6.89E+5	6.89E+5	6.89E+5
Na-24	1.61E+7	1.61E+7	1.61E+7	1.61E+7	1.61E+7	1.61E+7	1.61E+7
P-32	1.60E+11	9.42E+9	-	-	-	2.17E+9	6.21E+9
Cr-51	-	-	1.05E+5	2.30E+4	2.05E+5	4.71E+6	1.61E+5
Mn-54	-	3.89E+7	-	8.63E+6	-	1.43E+7	8.83E+6
Mn-56	-	3.21E-2	-	2.76E-2	-	2.91E+0	5.53E-3
Fe-55	1.35E+8	8.72E+7	-	-	4.27E+7	1.11E+7	2.33E+7
Fe-59	2.25E+8	3.93E+8	-	-	1.16E+8	1.88E+8	1.55E+8
Co-57	-	8.95E+6	-	-	-	3.05E+7	1.46E+7
Co-58	-	2.43E+7	-	-	-	6.05E+7	6.06E+7
Co-60	-	8.81E+7	-	-	-	2.10E+8	2.08E+8
Ni-63	3.49E+10	2.16E+9	-	-	-	1.07E+8	1.21E+9
Ni-65	3.51E+0	3.97E-1	-	-	-	3.02E+1	1.81E-1
Cu-64	-	1.88E+5	-	3.17E+5	-	3.85E+6	8.69E+4
Zn-65	5.55E+9	1.90E+10	-	9.23E+9	-	1.61E+10	8.78E+9
Zn-69	-	-	-	-	-	7.36E-9	-
Br-82	-	-	-	-	-	-	1.94E+8
Br-83	-	-	-	-	-	-	9.95E-1
Br-84	-	-	-	-	-	-	-
Br-85	-	-	-	-	-	-	-
Rb-86	-	2.22E+10	-	-	-	5.69E+8	1.10E+10
Rb-88	-	-	-	-	-	-	-
Rb-89	-	-	-	-	-	-	-
Sr-89	1.26E+10	-	-	-	-	2.59E+8	3.61E+8
Sr-90	1.22E+11	-	-	-	-	1.52E+9	3.10E+10
Sr-91	2.94E+5	-	-	-	-	3.48E+5	1.06E+4
Sr-92	4.65E+0	-	-	-	-	5.01E+1	1.73E-1
Y-90	6.80E+2	-	-	-	-	9.39E+5	1.82E+1
Y-91m	-	-	-	-	-	-	-
Y-91	7.33E+4	-	-	-	-	5.26E+6	1.95E+3
Y-92	5.22E-4	-	-	-	-	9.97E+0	1.47E-5
Y-93	2.25E+0	-	-	-	-	1.78E+4	6.13E-2
Zr-95	6.83E+3	1.66E+3	-	1.79E+3	-	8.28E+5	1.18E+3
Zr-97	3.99E+0	6.85E-1	-	6.91E-1	-	4.37E+4	3.13E-1
Nb-95	5.93E+5	2.44E+5	-	1.75E+5	-	2.06E+8	1.41E+5
Nb-97	-	-	-	-	-	3.70E-6	-
Mo-99	-	2.12E+8	-	3.17E+8	-	6.98E+7	4.13E+7
Tc-99m	2.69E+1	5.55E+1	-	5.97E+2	2.90E+1	1.61E+4	7.15E+2
Tc-101	-	-	-	-	-	-	-
Ru-103	8.69E+3	-	-	1.81E+4	-	1.06E+5	2.91E+3
Ru-105	8.06E-3	-	-	5.92E-2	-	3.21E+0	2.71E-3
Ru-106	1.90E+5	-	-	2.25E+5	-	1.44E+6	2.38E+4
Rh-103m	-	-	-	-	-	-	-
Rh-106	-	-	-	-	-	-	-
Ag-110m	3.86E+8	2.82E+8	-	4.03E+8	-	1.46E+10	1.86E+8
Sb-124	2.09E+8	3.08E+6	5.56E+5	-	1.31E+8	6.46E+8	6.49E+7
Sb-125	1.49E+8	1.45E+6	1.87E+5	-	9.38E+7	1.99E+8	3.07E+7
Te-125m	1.51E+8	5.04E+7	5.07E+7	-	-	7.18E+7	2.04E+7
Te-127m	4.21E+8	1.40E+8	1.22E+8	1.04E+9	-	1.70E+8	5.10E+7
Te-127	6.50E+3	2.18E+3	5.29E+3	1.59E+4	-	1.36E+5	1.40E+3
Te-129m	5.59E+8	1.92E+8	2.15E+8	1.40E+9	-	3.34E+8	8.62E+7
Te-129	2.08E-9	-	1.75E-9	5.18E-9	-	1.66E-7	-
Te-131m	3.38E+6	1.36E+6	2.76E+6	9.35E+6	-	2.29E+7	1.12E+6
Te-131	-	-	-	-	-	-	-
Te-132	2.10E+7	1.04E+7	1.54E+7	6.51E+7	-	3.85E+7	9.72E+6
I-130	3.60E+6	7.92E+6	8.88E+8	8.70E+6	-	1.70E+6	3.18E+6
I-131	2.72E+9	3.21E+9	1.05E+12	3.75E+9	-	1.15E+8	1.41E+9
I-132	1.42E+0	2.89E+0	1.35E+2	3.22E+0	-	2.34E+0	1.03E+0
I-133	3.72E+7	5.41E+7	9.84E+9	6.36E+7	-	9.16E+6	1.58E+7

Table 7.0-4

R_{aipo}, Grass-Cow-Milk Pathway Dose Factors - INFANT (CONT.)

(mrem/yr per μCi/m^3) for H-3 and C-14

(m^2 x mrem/yr per μCi/sec) for others

Nuclide	Bone	Liver	Thyroid	Kidney	Lung	GI-LLI	T.Body
I-134	-	-	1.01E-9	-	-	-	-
I-135	1.21E+5	2.41E+5	2.16E+7	2.69E+5	-	8.74E+4	8.80E+4
Cs-134	3.65E+10	6.80E+10	-	1.75E+10	7.18E+9	1.85E+8	6.87E+9
Cs-136	1.96E+9	5.77E+9	-	2.30E+9	4.70E+8	8.76E+7	2.15E+9
Cs-137	5.15E+10	6.02E+10	-	1.62E+10	6.55E+9	1.88E+8	4.27E+9
Cs-138	-	-	-	-	-	-	-
Ba-139	4.55E-7	-	-	-	-	2.88E-5	1.32E-8
Ba-140	2.41E+8	2.41E+5	-	5.73E+4	1.48E+5	5.92E+7	1.24E+7
Ba-141	-	-	-	-	-	-	-
Ba-142	-	-	-	-	-	-	-
La-140	4.03E+1	1.59E+1	-	-	-	1.87E+5	4.09E+0
La-142	-	-	-	-	-	5.21E-6	-
Ce-141	4.33E+4	2.64E+4	-	8.15E+3	-	1.37E+7	3.11E+3
Ce-143	4.00E+2	2.65E+5	-	7.72E+1	-	1.55E+6	3.02E+1
Ce-144	2.33E+6	9.52E+5	-	3.85E+5	-	1.33E+8	1.30E+5
Pr-143	1.49E+3	5.59E+2	-	2.08E+2	-	7.89E+5	7.41E+1
Pr-144	-	-	-	-	-	-	-
Nd-147	8.82E+2	9.06E+2	-	3.49E+2	-	5.74E+5	5.55E+1
W-187	6.12E+4	4.26E+4	-	-	-	2.50E+6	1.47E+4
Np-239	3.64E+1	3.25E+0	-	6.49E+0	-	9.40E+4	1.84E+0

Table 7.0-4

R_{aipo}, Grass-Cow-Meat Pathway Dose Factors - ADULT

(mrem/yr per μCi/m^3) for H-3 and C-14

(m^2 x mrem/yr per μCi/sec) for others

Nuclide	Bone	Liver	Thyroid	Kidney	Lung	GI-LLI	T.Body
H-3	-	3.25E+2	3.25E+2	3.25E+2	3.25E+2	3.25E+2	3.25E+2
C-14	3.33E+5	6.66E+4	6.66E+4	6.66E+4	6.66E+4	6.66E+4	6.66E+4
Na-24	1.84E-3	1.84E-3	1.84E-3	1.84E-3	1.84E-3	1.84E-3	1.84E-3
P-32	4.65E+9	2.89E+8	-	-	-	5.23E+8	1.80E+0
Cr-51	-	-	4.22E+3	1.56E+3	9.38E+3	1.78E+6	7.07E+3
Mn-54	-	9.15E+6	-	2.72E+6	-	2.80E+7	1.75E+6
Mn-56	-	-	-	-	-	-	-
Fe-55	2.93E+8	2.02E+8	-	-	1.13E+8	1.16E+8	4.72E+7
Fe-59	2.67E+8	6.27E+8	-	-	1.75E+8	2.09E+9	2.40E+8
Co-57	-	5.64E+6	-	-	-	1.43E+8	9.37E+6
Co-58	-	1.83E+7	-	-	-	3.70E+8	4.10E+7
Co-60	-	7.52E+7	-	-	-	1.41E+9	1.66E+8
Ni-63	1.89E+10	1.31E+9	-	-	-	2.73E+8	6.33E+8
Ni-65	-	-	-	-	-	-	-
Cu-64	-	2.95E-7	-	7.45E-7	-	2.52E-5	1.39E-7
Zn-65	3.56E+8	1.13E+9	-	7.57E+8	-	7.13E+8	5.12E+8
Zn-69	-	-	-	-	-	-	-
Br-82	-	-	-	-	-	1.44E+3	1.26E+3
Br-83	-	-	-	-	-	-	-
Br-84	-	-	-	-	-	-	-
Br-85	-	-	-	-	-	-	-
Rb-86	-	4.87E+8	-	-	-	9.60E+7	2.27E+8
Rb-88	-	-	-	-	-	-	-
Rb-89	-	-	-	-	-	-	-
Sr-89	3.01E+8	-	-	-	-	4.84E+7	8.65E+6
Sr-90	1.24E+10	-	-	-	-	3.59E+8	3.05E+9
Sr-91	-	-	-	-	-	1.38E-9	-
Sr-92	-	-	-	-	-	-	-
Y-90	1.07E+2	-	-	-	-	1.13E+6	2.86E+0
Y-91m	-	-	-	-	-	-	-
Y-91	1.13E+6	-	-	-	-	6.24E+8	3.03E+4
Y-92	-	-	-	-	-	-	-
Y-93	-	-	-	-	-	2.08E-7	-
Zr-95	1.88E+6	6.04E+5	-	9.48E+5	-	1.91E+9	4.09E+5
Zr-97	1.83E-5	3.69E-6	-	5.58E-6	-	1.14E+0	1.69E-6
Nb-95	2.29E+6	1.28E+6	-	1.26E+6	-	7.75E+9	6.86E+5
Nb-97	-	-	-	-	-	-	-
Mo-99	-	1.09E+5	-	2.46E+5	-	2.52E+5	2.07E+4
Tc-99m	-	-	-	-	-	-	-
Tc-101	-	-	-	-	-	-	-
Ru-103	1.06E+8	-	-	4.03E+8	-	1.23E+10	4.55E+7
Ru-105	-	-	-	-	-	-	-
Ru-106	2.80E+9	-	-	5.40E+9	-	1.81E+11	3.54E+8
Rh-103m	-	-	-	-	-	-	-
Rh-106	-	-	-	-	-	-	-
Ag-110m	6.69E+6	6.19E+6	-	1.22E+7	-	2.52E+9	3.67E+6
Sb-124	1.98E+7	3.74E+5	4.80E+4	-	1.54E+7	5.62E+8	7.85E+6
Sb-125	1.91E+7	2.13E+5	1.94E+4	-	1.47E+7	2.10E+8	4.54E+6
Te-125m	3.59E+8	1.30E+8	1.08E+8	1.46E+9	-	1.43E+9	4.81E+7
Te-127m	1.12E+9	3.99E+8	2.85E+8	4.53E+9	-	3.74E+9	1.36E+8
Te-127	-	-	-	1.09E-9	-	2.10E-8	-
Te-129m	1.14E+9	4.27E+8	3.93E+8	4.77E+9	-	5.76E+9	1.81E+8
Te-129	-	-	-	-	-	-	-
Te-131m	4.51E+2	2.21E+2	3.50E+2	2.24E+3	-	2.19E+4	1.84E+2
Te-131	-	-	-	-	-	-	-
Te-132	1.40E+6	9.07E+5	1.00E+6	8.73E+6	-	4.29E+7	8.51E+5
I-130	2.35E-6	6.94E-6	5.88E-4	1.08E-5	-	5.98E-6	2.74E-6
I-131	1.08E+7	1.54E+7	5.05E+9	2.64E+7	-	4.07E+6	8.83E+6
I-132	-	-	-	-	-	-	-
I-133	4.30E-1	7.47E-1	1.10E+2	1.30E+0	-	6.72E-1	2.28E-1

Table 7.0-4

R_{aipo}, Grass-Cow-Meat Pathway Dose Factors - ADULT (CONT)

(mrem/yr per μCi/m^3) for H-3 and C-14

(m^2 x mrem/yr per μCi/sec) for others

Nuclide	Bone	Liver	Thyroid	Kidney	Lung	GI-LLI	T.Body
I-134	-	-	-	-	-	-	-
I-135	-	-	-	-	-	-	-
Cs-134	6.57E+8	1.56E+9	-	5.06E+8	1.68E+8	2.74E+7	1.28E+9
Cs-136	1.18E+7	4.67E+7	-	2.60E+7	3.56E+6	5.30E+6	3.36E+7
Cs-137	8.72E+8	1.19E+9	-	4.05E+8	1.35E+8	2.31E+7	7.81E+8
Cs-138	-	-	-	-	-	-	-
Ba-139	-	-	-	-	-	-	-
Ba-140	2.88E+7	3.61E+4	-	1.23E+4	2.07E+4	5.92E+7	1.89E+6
Ba-141	-	-	-	-	-	-	-
Ba-142	-	-	-	-	-	-	-
La-140	3.60E-2	1.81E-2	-	-	-	1.33E+3	4.79E-3
La-142	-	-	-	-	-	-	-
Ce-141	1.40E+4	9.48E+3	-	4.40E+3	-	3.62E+7	1.08E+3
Ce-143	2.09E-2	1.55E+1	-	6.80E-3	-	5.78E+2	1.71E-3
Ce-144	1.46E+6	6.09E+5	-	3.61E+5	-	4.93E+8	7.83E+4
Pr-143	2.13E+4	8.54E+3	-	4.93E+3	-	9.33E+7	1.06E+3
Pr-144	-	-	-	-	-	-	-
Nd-147	7.08E+3	8.18E+3	-	4.78E+3	-	3.93E+7	4.90E+2
W-187	2.16E-2	1.81E-2	-	-	-	5.92E+0	6.32E-3
Np-239	2.56E-1	2.51E-2	-	7.84E-2	-	5.15E+3	1.39E-2

Table 7.0-4

R_{aipo}, Grass-Cow-Meat Pathway Dose Factors - TEENAGER

(mrem/yr per μCi/m^3) for H-3 and C-14

(m^2 x mrem/yr per μCi/sec) for others

Nuclide	Bone	Liver	Thyroid	Kidney	Lung	GI-LLI	T.Body
H-3	-	1.94E+2	1.94E+2	1.94E+2	1.94E+2	1.94E+2	1.94E+2
C-14	2.81E+5	5.62E+4	5.62E+4	5.62E+4	5.62E+4	5.62E+4	5.62E+4
Na-24	1.47E-3	1.47E-3	1.47E-3	1.47E-3	1.47E-3	1.47E-3	1.47E-3
P-32	3.93E+9	2.44E+8	-	-	-	3.30E+8	1.52E+8
Cr-51	-	-	3.14E+3	1.24E+3	8.07E+3	9.50E+5	5.65E+3
Mn-54	-	6.98E+6	-	2.08E+6	-	1.43E+7	1.38E+6
Mn-56	-	-	-	-	-	-	-
Fe-55	2.38E+8	1.69E+8	-	-	1.07E+8	7.30E+7	3.93E+7
Fe-59	2.13E+8	4.98E+8	-	-	1.57E+8	1.18E+9	1.92E+8
Co-57	-	4.53E+6	-	-	-	8.45E+7	7.59E+6
Co-58	-	1.41E+7	-	-	-	1.94E+8	3.25E+7
Co-60	-	5.83E+7	-	-	-	7.60E+8	1.31E+8
Ni-63	1.52E+10	1.07E+9	-	-	-	1.71E+8	5.15E+8
Ni-65	-	-	-	-	-	-	-
Cu-64	-	2.41E-7	-	6.10E-7	-	1.87E-5	1.13E-7
Zn-65	2.50E+8	8.69E+8	-	5.56E+8	-	3.68E+8	4.05E+8
Zn-69	-	-	-	-	-	-	-
Br-82	-	-	-	-	-	-	9.98E+2
Br-83	-	-	-	-	-	-	-
Br-84	-	-	-	-	-	-	-
Br-85	-	-	-	-	-	-	-
Rb-86	-	4.06E+8	-	-	-	6.01E+7	1.91E+8
Rb-88	-	-	-	-	-	-	-
Rb-89	-	-	-	-	-	-	-
Sr-89	2.54E+C	-	-	-	-	3.03E+7	7.29E+6
Sr-90	8.05E+9	-	-	-	-	2.26E+8	1.99E+9
Sr-91	-	-	-	-	-	1.10E-9	-
Sr-92	-	-	-	-	-	-	-
Y-90	8.98E+1	-	-	-	-	7.40E+5	2.42E+0
Y-91m	-	-	-	-	-	-	-
Y-91	9.56E+5	-	-	-	-	3.92E+8	2.56E+4
Y-92	-	-	-	-	-	-	-
Y-93	-	-	-	-	-	1.69E-7	-
Zr-95	1.51E+6	4.76E+5	-	6.99E+5	-	1.10E+9	3.27E+5
Zr-97	1.53E-5	3.02E-6	-	4.58E-6	-	8.18E-1	1.39E-6
Nb-95	1.79E+6	9.94E+5	-	9.64E+5	-	4.25E+9	5.47E+5
Nb-97	-	-	-	-	-	-	-
Mo-99	-	8.98E+4	-	2.06E+5	-	1.61E+5	1.71E+4
Tc-99m	-	-	-	-	-	-	-
Tc-101	-	-	-	-	-	-	-
Ru-103	8.60E+7	-	-	3.03E+8	-	7.18E+9	3.68E+7
Ru-105	-	-	-	-	-	-	-
Ru-106	2.36E+9	-	-	4.55E+9	-	1.13E+11	2.97E+8
Rh-103m	-	-	-	-	-	-	-
Rh-106	-	-	-	-	-	-	-
Ag-110m	5.06E+6	4.79E+6	-	9.14E+6	-	1.35E+9	2.91E+6
Sb-124	1.62E+7	2.98E+5	3.67E+4	-	1.41E+7	3.26E+8	6.31E+6
Sb-125	1.56E+7	1.71E+5	1.49E+4	-	1.37E+7	1.22E+8	3.66E+6
Te-125m	3.03E+8	1.09E+8	8.47E+7	-	-	8.94E+8	4.05E+7
Te-127m	9.41E+8	3.34E+8	2.24E+8	3.82E+9	-	2.35E+9	1.12E+8
Te-127	-	-	-	-	-	1.75E-8	-
Te-129m	9.58E+8	3.56E+8	3.09E+8	4.01E+9	-	3.60E+9	1.52E+8
Te-129	-	-	-	-	-	-	-
Te-131m	3.76E+2	1.80E+2	2.71E+2	1.88E+3	-	1.45E+4	1.50E+2
Te-131	-	-	-	-	-	-	-
Te-132	1.15E+6	7.26E+5	7.66E+5	6.97E+6	-	2.30E+7	6.84E+5
I-130	1.89E-6	5.48E-6	4.47E-4	8.44E-6	-	4.21E-6	2.19E-6
I-131	8.95E+6	1.25E+7	3.66E+9	2.16E+7	-	2.48E+6	6.73E+6
I-132	-	-	-	-	-	-	-
I-133	3.59E-1	6.10E-1	8.51E+1	1.07E+0	-	4.61E-1	1.86E-1

Table 7.0-4

R_{aipo}, Grass-Cow-Meat Pathway Dose Factors - TEENAGER (CONT.)

(mrem/yr per μCi/m^3) for H-3 and C-14

(m^2 x mrem/yr per μCi/sec) for others

Nuclide	Bone	Liver	Thyroid	Kidney	Lung	GI-LLI	T.Body
I-134	-	-	-	-	-	-	-
I-135	-	-	-	-	-	-	-
Cs-134	5.23E+8	1.23E+9	-	3.91E+8	1.49E+8	1.53E+7	5.71E+8
Cs-136	9.22E+6	3.63E+7	-	1.97E+7	3.11E+6	2.92E+6	2.44E+7
Cs-137	7.24E+8	9.63E+8	-	3.28E+8	1.27E+8	1.37E+7	3.36E+8
Cs-138	-	-	-	-	-	-	-
Ba-139	-	-	-	-	-	-	-
Ba-140	2.38E+7	2.91E+4	-	9.88E+3	1.96E+4	3.67E+7	1.53E+6
Ba-141	-	-	-	-	-	-	-
Ba-142	-	-	-	-	-	-	-
La-140	2.96E-2	1.45E-2	-	-	-	8.35E+2	3.87E-3
La-142	-	-	-	-	-	-	-
Ce-141	1.18E+4	7.86E+3	-	3.70E+3	-	2.25E+7	9.03E+2
Ce-143	1.76E-2	1.28E+1	-	5.74E-3	-	3.85E+2	1.43E-3
Ce-144	1.23E+6	5.08E+5	-	3.04E+5	-	3.09E+8	6.60E+4
Pr-143	1.79E+4	7.15E+3	-	4.16E+3	-	5.90E+7	8.92E+2
Pr-144	-	-	-	-	-	-	-
Nd-147	6.24E+3	6.79E+3	-	3.98E+3	-	2.45E+7	4.06E+2
W-187	1.81E-2	1.48E-2	-	-	-	3.99E+0	5.17E-3
Np-239	2.23E-1	2.11E-2	-	6.61E-2	-	3.39E+3	1.17E-2

Table 7.0-4

R_{aipo}, Grass-Cow-Meat Pathway Dose Factors - CHILD

(mrem/yr per μCi/m^3) for H-3 and C-14

(m^2 x mrem/yr per μCi/sec) for others

Nuclide	Bone	Liver	Thyroid	Kidney	Lung	GI-LLI	T.Body
H-3	-	2.34E+2	2.34E+2	2.34E+2	2.34E+2	2.34E+2	2.34E+2
C-14	5.29E+5	1.06E+5	1.06E+5	1.06E+5	1.06E+5	1.06E+5	1.06E+5
Na-24	2.34E-3	2.34E-3	2.34E-3	2.34E-3	2.34E-3	2.34E-3	2.34E-3
P-32	7.41E+9	3.47E+8	-	-	-	2.05E+8	2.86E+8
Cr-51	-	-	4.89E+3	1.34E+3	8.93E+3	4.67E+5	8.81E+3
Mn-54	-	7.99E+6	-	2.24E+6	-	6.70E+6	2.13E+6
Mn-56	-	-	-	-	-	-	-
Fe-55	4.57E+8	2.42E+8	-	-	1.37E+8	4.49E+7	7.51E+7
Fe-59	3.78E+8	6.12E+8	-	-	1.77E+8	6.37E+8	3.05E+8
Co-57	-	5.92E+6	-	-	-	4.85E+7	1.20E+7
Co-58	-	1.65E+7	-	-	-	9.60E+7	5.04E+7
Co-60	-	6.93E+7	-	-	-	3.84E+8	2.04E+8
Ni-63	2.91E+10	1.56E+9	-	-	-	1.05E+8	9.91E+8
Ni-65	-	-	-	-	-	-	-
Cu-64	-	3.24E-7	-	7.82E-7	-	1.52E-5	1.96E-7
Zn-65	3.75E+8	1.00E+9	-	6.30E+8	-	1.76E+8	6.22E+8
Zn-69	-	-	-	-	-	-	-
Br-82	-	-	-	-	-	-	1.56E+3
Br-83	-	-	-	-	-	-	-
Br-84	-	-	-	-	-	-	-
Br-85	-	-	-	-	-	-	-
Rb-86	-	5.76E+8	-	-	-	3.71E+7	3.54E+8
Rb-88	-	-	-	-	-	-	-
Rb-89	-	-	-	-	-	-	-
Sr-89	4.82E+8	-	-	-	-	1.86E+7	1.38E+7
Sr-90	1.04E+10	-	-	-	-	1.40E+8	2.64E+9
Sr-91	-	-	-	-	-	1.01E-9	-
Sr-92	-	-	-	-	-	-	-
Y-90	1.70E+2	-	-	-	-	4.84E+5	4.55E+0
Y-91m	-	-	-	-	-	-	-
Y-91	1.81E+6	-	-	-	-	2.41E+8	4.83E+4
Y-92	-	-	-	-	-	-	-
Y-93	-	-	-	-	-	1.55E-7	-
Zr-95	2.68E+6	5.89E+5	-	8.43E+5	-	6.14E+8	5.24E+5
Zr-97	2.84E-5	4.10E-6	-	5.89E-6	-	6.21E-1	2.42E-6
Nb-95	3.09E+6	1.20E+6	-	1.13E+6	-	2.23E+9	8.61E+5
Nb-97	-	-	-	-	-	-	-
Mo-99	-	1.25E+5	-	2.67E+5	-	1.03E+5	3.09E+4
Tc-99m	-	-	-	-	-	-	-
Tc-101	-	-	-	-	-	-	-
Ru-103	1.56E+8	-	-	3.92E+8	-	4.02E+9	5.98E+7
Ru-105	-	-	-	-	-	-	-
Ru-106	4.44E+9	-	-	5.99E+9	-	6.90E+10	5.54E+8
Rh-103m	-	-	-	-	-	-	-
Rh-106	-	-	-	-	-	-	-
Ag-110m	8.40E+6	5.67E+6	-	1.06E+7	-	6.75E+8	4.53E+6
Sb-124	2.93E+7	3.80E+5	6.46E+4	-	1.62E+7	1.83E+8	1.03E+7
Sb-125	2.85E+7	2.19E+5	2.64E+4	-	1.59E+7	6.80E+7	5.96E+6
Te-125m	5.69E+8	1.54E+8	1.60E+8	-	-	5.49E+8	7.59E+7
Te-127m	1.77E+9	4.78E+8	4.24E+8	5.06E+9	-	1.44E+9	2.11E+8
Te-127	-	-	-	1.21E-9	-	1.66E-8	-
Te-129m	1.81E+9	5.04E+8	5.82E+8	5.30E+9	-	2.20E+9	2.80E+8
Te-129	-	-	-	-	-	-	-
Te-131m	7.00E+2	2.42E+2	4.98E+2	2.34E+3	-	9.82E+3	2.58E+2
Te-131	-	-	-	-	-	-	-
Te-132	2.09E+6	9.27E+5	1.35E+6	8.60E+6	-	9.33E+6	1.12E+6
I-130	3.39E-6	6.85E-6	7.54E-4	1.02E-5	-	3.20E-6	3.53E-6
I-131	1.66E+7	1.67E+7	5.52E+9	2.74E+7	-	1.49E+6	9.49E+6
I-132	-	-	-	-	-	-	-
I-133	6.68E-1	8.26E-1	1.53E+2	1.38E+0	-	3.33E-1	3.12E-1

Table 7.0-4

R_{aipo}, Grass-Cow-Meat Pathway Dose Factors - CHILD (CONT.)

(mrem/yr per μCi/m^3) for H-3 and C-14

(m^2 x mrem/yr per μCi/sec) for others

Nuclide	Bone	Liver	Thyroid	Kidney	Lung	GI-LLI	T.Body
I-134	-	-	-	-	-	-	-
I-135	-	-	-	-	-	-	-
Cs-134	9.22E+8	1.51E+9	-	4.69E+8	1.68E+8	8.15E+6	3.19E+8
Cs-136	1.59E+7	4.37E+7	-	2.33E+7	3.47E+6	1.54E+6	2.83E+7
Cs-137	1.33E+9	1.28E+9	-	4.16E+8	1.50E+8	7.99E+6	1.88E+8
Cs-138	-	-	-	-	-	-	-
Ba-139	-	-	-	-	-	-	-
Ba-140	4.39E+7	3.85E+4	-	1.25E+4	2.29E+4	2.22E+7	2.56E+6
Ba-141	-	-	-	-	-	-	-
Ba-142	-	-	-	-	-	-	-
La-140	5.41E-2	1.89E-2	-	-	-	5.27E+2	6.38E-3
La-142	-	-	-	-	-	-	-
Ce-141	2.22E+4	1.11E+4	-	4.84E+3	-	1.38E+7	1.64E+3
Ce-143	3.30E-2	1.79E+1	-	7.51E-3	-	2.62E+2	2.59E-3
Ce-144	2.32E+6	7.26E+5	-	4.02E+5	-	1.89E+8	1.24E+5
Pr-143	3.39E+4	1.02E+4	-	5.51E+3	-	3.66E+7	1.68E+3
Pr-144	-	-	-	-	-	-	-
Nd-147	1.17E+4	9.48E+3	-	5.20E+3	-	1.50E+7	7.34E+2
W-187	3.36E-2	1.99E-2	-	-	-	2.79E+0	8.92E-3
Np-239	4.20E-1	3.02E-2	-	8.73E-2	-	2.23E+3	2.12E-2

Table 7.0-4

R_{aipo}, Vegetation Pathway Dose Factors - ADULT

(mrem/yr per μCi/m^3) for H-3 and C-14

(m^2 x mrem/yr per μCi/sec) for others

Nuclide	Bone	Liver	Thyroid	Kidney	Lung	GI-LLI	T.Body
H-3	-	2.26E+3	2.26E+3	2.26E+3	2.26E+3	2.26E+3	2.26E+3
C-14	8.97E+5	1.79E+5	1.79E+5	1.79E+5	1.79E+5	1.79E+5	1.79E+5
Na-24	2.76E+5	2.76E+5	2.76E+5	2.76E+5	2.76E+5	2.76E+5	2.76E+5
P-32	1.40E+9	8.73E+7	-	-	-	1.58E+8	5.42E+7
Cr-51	-	-	2.79E+4	1.03E+4	6.19E+4	1.17E+7	4.66E+4
Mn-54	-	3.11E+8	-	9.27E+7	-	9.54E+8	5.94E+7
Mn-56	-	1.61E+1	-	2.04E+1	-	5.13E+2	2.85E+0
Fe-55	2.09E+8	1.45E+8	-	-	8.06E+7	8.29E+7	3.37E+7
Fe-59	1.27E+8	2.99E+8	-	-	8.35E+7	9.96E+8	1.14E+8
Co-57	-	1.17E+7	-	-	-	2.97E+8	1.95E+7
Co-58	-	3.09E+7	-	-	-	6.26E+8	6.92E+7
Co-60	-	1.67E+8	-	-	-	3.14E+9	3.69E+8
Ni-63	1.04E+10	7.21E+8	-	-	-	1.50E+8	3.49E+8
Ni-65	6.15E+1	7.99E+0	-	-	-	2.03E+2	3.65E+0
Cu-64	-	9.27E+3	-	2.34E+4	-	7.90E+5	4.35E+3
Zn-65	3.17E+8	1.01E+9	-	6.75E+8	-	6.36E+8	4.56E+8
Zn-69	8.75E-6	1.67E-5	-	1.09E-5	-	2.51E-6	1.16E-6
Br-82	-	-	-	-	-	1.73E+6	1.51E+6
Br-83	-	-	-	-	-	4.63E+0	3.21E+0
Br-84	-	-	-	-	-	-	-
Br-85	-	-	-	-	-	-	-
Rb-86	-	2.19E+8	-	-	-	4.32E+7	1.02E+8
Rb-88	-	-	-	-	-	-	-
Rb-89	-	-	-	-	-	-	-
Sr-89	9.96E+9	-	-	-	-	1.60E+9	2.86E+8
Sr-90	6.05E+11	-	-	-	-	1.75E+10	1.48E+11
Sr-91	3.20E+5	-	-	-	-	1.52E+6	1.29E+4
Sr-92	4.27E+2	-	-	-	-	8.46E+3	1.85E+1
Y-90	1.33E+4	-	-	-	-	1.41E+8	3.56E+2
Y-91m	5.83E-9	-	-	-	-	1.71E-8	-
Y-91	5.13E+6	-	-	-	-	2.82E+9	1.37E+5
Y-92	9.01E-1	-	-	-	-	1.58E+4	2.63E-2
Y-93	1.74E+2	-	-	-	-	5.52E+6	4.80E+0
Zr-95	1.19E+6	3.81E+5	-	5.97E+5	-	1.21E+9	2.58E+5
Zr-97	3.33E+2	6.73E+1	-	1.02E+2	-	2.08E+7	3.08E+1
Nb-95	1.42E+5	7.91E+4	-	7.81E+4	-	4.80E+8	4.25E+4
Nb-97	2.90E-6	7.34E-7	-	8.56E-7	-	2.71E-3	2.68E-7
Mo-99	-	6.25E+6	-	1.41E+7	-	1.45E+7	1.19E+6
Tc-99m	3.06E+0	8.66E+0	-	1.32E+2	4.24E+0	5.12E+3	1.10E+2
Tc-101	-	-	-	-	-	-	-
Ru-103	4.80E+6	-	-	1.83E+7	-	5.61E+8	2.07E+6
Ru-105	5.39E+1	-	-	6.96E+2	-	3.30E+4	2.13E+1
Ru-106	1.93E+8	-	-	3.72E+8	-	1.25E+10	2.44E+7
Rh-103m	-	-	-	-	-	-	-
Rh-106	-	-	-	-	-	-	-
Ag-110m	1.06E+7	9.76E+6	-	1.92E+7	-	3.98E+9	5.80E+6
Sb-124	1.04E+8	1.96E+6	2.52E+5	-	8.08E+7	2.95E+9	4.11E+7
Sb-125	1.36E+8	1.52E+6	1.39E+5	-	1.05E+8	1.50E+9	3.25E+7
Te-125m	9.66E+7	3.50E+7	2.90E+7	3.93E+8	-	3.86E+8	1.29E+7
Te-127m	3.49E+8	1.25E+8	8.92E+7	1.42E+9	-	1.17E+9	4.26E+7
Te-127	5.76E+3	2.07E+3	4.27E+3	2.35E+4	-	4.54E+5	1.25E+3
Te-129m	2.55E+8	9.50E+7	8.75E+7	1.06E+9	-	1.28E+9	4.03E+7
Te-129	6.65E-4	2.50E-4	5.10E-4	2.79E-3	-	5.02E-4	1.62E-4
Te-131m	9.12E+5	4.46E+5	7.06E+5	4.52E+6	-	4.43E+7	3.72E+5
Te-131	-	-	-	-	-	-	-
Te-132	4.29E+6	2.77E+6	3.06E+6	2.67E+7	-	1.31E+8	2.60E+6
I-130	3.96E+5	1.17E+6	9.90E+7	1.82E+6	-	1.01E+6	4.61E+5
I-131	8.09E+7	1.16E+8	3.79E+10	1.98E+8	-	3.05E+7	6.63E+7
I-132	5.74E+1	1.54E+2	5.38E+3	2.45E+2	-	2.89E+1	5.38E+1
I-133	2.12E+6	3.69E+6	5.42E+8	6.44E+6	-	3.31E+6	1.12E+6

Table 7.0-4

R_{aipo}, Vegetation Pathway Dose Factors - ADULT (CONT.)

(mrem/yr per μCi/m^3) for H-3 and C-14

(m^2 x mrem/yr per μCi/sec) for others

Nuclide	Bone	Liver	Thyroid	Kidney	Lung	GI-LLI	T.Body
I-134	1.06E-4	2.88E-4	5.00E-3	4.59E-4	-	2.51E-7	1.03E-4
I-135	4.08E+4	1.07E+5	7.04E+6	1.71E+5	-	1.21E+5	3.94E+4
Cs-134	4.66E+9	1.11E+10	-	3.59E+9	1.19E+9	1.94E+8	9.07E+9
Cs-136	4.20E+7	1.66E+8	-	9.24E+7	1.27E+7	1.89E+7	1.19E+8
Cs-137	6.36E+9	8.70E+9	-	2.95E+9	9.81E+8	1.68E+8	5.70E+9
Cs-138	-	-	-	-	-	-	-
Ba-139	2.95E-2	2.10E-5	-	1.96E-5	1.19E-5	5.23E-2	8.64E-4
Ba-140	1.29E+8	1.62E+5	-	5.49E+4	9.25E+4	2.65E+8	8.43E+6
Ba-141	-	-	-	-	-	-	-
Ba-142	-	-	-	-	-	-	-
La-140	1.97E+3	9.92E+2	-	-	-	7.28E+7	2.62E+2
La-142	1.40E-4	6.35E-5	-	-	-	4.64E-1	1.58E-5
Ce-141	1.96E+5	1.33E+5	-	6.17E+4	-	5.08E+8	1.51E+4
Ce-143	1.00E+3	7.42E+5	-	3.26E+2	-	2.77E+7	8.21E+1
Ce-144	3.29E+7	1.38E+7	-	8.16E+6	-	1.11E+10	1.77E+6
Pr-143	6.34E+4	2.54E+4	-	1.47E+4	-	2.78E+8	3.14E+3
Pr-144	-	-	-	-	-	-	-
Nd-147	3.34E+4	3.86E+4	-	2.25E+4	-	1.85E+8	2.31E+3
W-187	3.82E+4	3.19E+4	-	-	-	1.05E+7	1.12E+4
Np-239	1.42E+3	1.40E+2	-	4.37E+2	-	2.87E+7	7.72E+1

Table 7.0-4

R_{aipo}, Vegetation Pathway Dose Factors - TEENAGER

(mrem/yr per μCi/m^3) for H-3 and C-14

(m^2 x mrem/yr per μCi/sec) for others

Nuclide	Bone	Liver	Thyroid	Kidney	Lung	GI-LLI	T.Body
H-3	-	2.59E+3	2.59E+3	2.59E+3	2.59E+3	2.59E+3	2.59E+3
C-14	1.45E+6	2.91E+5	2.91E+5	2.91E+5	2.91E+5	2.91E+5	2.91E+5
Na-24	2.45E+5	2.45E+5	2.45E+5	2.45E+5	2.45E+5	2.45E+5	2.45E+5
P-32	1.61E+9	9.96E+7	-	-	-	1.35E+8	6.23E+7
Cr-51	-	-	3.44E+4	1.36E+4	8.85E+4	1.04E+7	6.20E+4
Mn-54	-	4.52E+8	-	1.35E+8	-	9.27E+8	8.97E+7
Mn-56	-	1.45E+1	-	1.83E+1	-	9.54E+2	2.58E+0
Fe-55	3.25E+8	2.31E+8	-	-	1.46E+8	9.98E+7	5.38E+7
Fe-59	1.81E+8	4.22E+8	-	-	1.33E+8	9.98E+8	1.63E+8
Co-57	-	1.79E+7	-	-	-	3.34E+8	3.00E+7
Co-58	-	4.38E+7	-	-	-	6.04E+8	1.01E+8
Co-60	-	2.49E+8	-	-	-	3.24E+9	5.60E+8
Ni-63	1.61E+10	1.13E+9	-	-	-	1.81E+8	5.45E+8
Ni-65	5.73E+1	7.32E+0	-	-	-	3.97E+2	3.33E+0
Cu-64	-	8.40E+3	-	2.12E+4	-	6.51E+5	3.95E+3
Zn-65	4.24E+8	1.47E+9	-	9.41E+8	-	6.23E+8	6.86E+8
Zn-69	8.19E-6	1.56E-5	-	1.02E-5	-	2.88E-5	1.09E-6
Br-82	-	-	-	-	-	-	1.33E+6
Br-83	-	-	-	-	-	-	3.01E+0
Br-84	-	-	-	-	-	-	-
Br-85	-	-	-	-	-	-	-
Rb-86	-	2.73E+8	-	-	-	4.05E+7	1.28E+8
Rb-88	-	-	-	-	-	-	-
Rb-89	-	-	-	-	-	-	-
Sr-89	1.51E+10	-	-	-	-	1.80E+9	4.33E+8
Sr-90	7.51E+11	-	-	-	-	2.11E+10	1.85E+11
Sr-91	2.99E+5	-	-	-	-	1.36E+6	1.19E+4
Sr-92	3.97E+2	-	-	-	-	1.01E+4	1.69E+1
Y-90	1.24E+4	-	-	-	-	1.02E+8	3.34E+2
Y-91m	5.43E-9	-	-	-	-	2.56E-7	-
Y-91	7.87E+6	-	-	-	-	3.23E+9	2.11E+5
Y-92	8.47E-1	-	-	-	-	2.32E+4	2.45E-2
Y-93	1.63E+2	-	-	-	-	4.98E+6	4.47E+0
Zr-95	1.74E+6	5.49E+5	-	8.07E+5	-	1.27E+9	3.78E+5
Zr-97	3.09E+2	6.11E+1	-	9.26E+1	-	1.65E+7	2.81E+1
Nb-95	1.92E+5	1.06E+5	-	1.03E+5	-	4.55E+8	5.86E+4
Nb-97	2.69E-6	6.67E-7	-	7.80E-7	-	1.59E-2	2.44E-7
Mo-99	-	5.74E+6	-	1.31E+7	-	1.03E+7	1.09E+6
Tc-99m	2.70E+0	7.54E+0	-	1.12E+2	4.19E+0	4.95E+3	9.77E+1
Tc-101	-	-	-	-	-	-	-
Ru-103	6.87E+6	-	-	2.42E+7	-	5.74E+8	2.94E+6
Ru-105	5.00E+1	-	-	6.31E+2	-	4.04E+4	1.94E+1
Ru-106	3.09E+8	-	-	5.97E+8	-	1.48E+10	3.90E+7
Rh-103m	-	-	-	-	-	-	-
Rh-106	-	-	-	-	-	-	-
Ag-110m	1.52E+7	1.44E+7	-	2.74E+7	-	4.04E+9	8.74E+6
Sb-124	1.55E+8	2.85E+6	3.51E+5	-	1.35E+8	3.11E+9	6.03E+7
Sb-125	2.14E+8	2.34E+6	2.04E+5	-	1.88E+8	1.66E+9	5.00E+7
Te-125m	1.48E+8	5.34E+7	4.14E+7	-	-	4.37E+8	1.98E+7
Te-127m	5.51E+8	1.96E+8	1.31E+8	2.24E+9	-	1.37E+9	6.56E+7
Te-127	5.43E+3	1.92E+3	3.74E+3	2.20E+4	-	4.19E+5	1.17E+3
Te-129m	3.67E+8	1.36E+8	1.18E+8	1.54E+9	-	1.38E+9	5.81E+7
Te-129	6.22E-4	2.32E-4	4.45E-4	2.61E-3	-	3.40E-3	1.51E-4
Te-131m	8.44E+5	4.05E+5	6.09E+5	4.22E+6	-	3.25E+7	3.38E+5
Te-131	-	-	-	-	-	-	-
Te-132	3.90E+6	2.47E+6	2.60E+6	2.37E+7	-	7.82E+7	2.32E+6
I-130	3.54E+5	1.02E+6	8.35E+7	1.58E+6	-	7.87E+5	4.09E+5
I-131	7.70E+7	1.08E+8	3.14E+10	1.85E+8	-	2.13E+7	5.79E+7
I-132	5.18E+1	1.36E+2	4.57E+3	2.14E+2	-	5.91E+1	4.87E+1
I-133	1.97E+6	3.34E+6	4.66E+8	5.86E+6	-	2.53E+6	1.02E+6

Table 7.0-4

R_{aipo}, Vegetation Pathway Dose Factors - TEENAGER (CONT.)

(mrem/yr per $\mu Ci/m^3$) for H-3 and C-14

(m^2 x mrem/yr per $\mu Ci/sec$) for others

Nuclide	Bone	Liver	Thyroid	Kidney	Lung	GI-LLI	T.Body
I-134	9.59E-5	2.54E-4	4.24E-3	4.01E-4	-	3.35E-6	9.13E-5
I-135	3.68E+4	9.48E+4	6.10E+6	1.50E+5	-	1.05E+5	3.52E+4
Cs-134	7.09E+9	1.67E+10	-	5.30E+9	2.02E+9	2.08E+8	7.74E+9
Cs-136	4.29E+7	1.69E+8	-	9.19E+7	1.45E+7	1.36E+7	1.13E+8
Cs-137	1.01E+10	1.35E+10	-	4.59E+9	1.78E+9	1.92E+8	4.69E+9
Cs-138	-	-	-	-	-	-	-
Ba-139	2.77E-2	1.95E-5	-	1.84E-5	1.34E-5	2.47E-1	8.08E-4
Ba-140	1.38E+8	1.69E+5	-	5.75E+4	1.14E+5	2.13E+8	8.91E+6
Ba-141	-	-	-	-	-	-	-
Ba-142	-	-	-	-	-	-	-
La-140	1.80E+3	8.84E+2	-	-	-	5.08E+7	2.35E+2
La-142	1.28E-4	5.69E-5	-	-	-	1.73E+0	1.42E-5
Ce-141	2.82E+5	1.88E+5	-	8.86E+4	-	5.38E+8	2.16E+4
Ce-143	9.37E+2	6.82E+5	-	3.06E+2	-	2.05E+7	7.62E+1
Ce-144	5.27E+7	2.18E+7	-	1.30E+7	-	1.33E+10	2.83E+6
Pr-143	7.12E+4	2.84E+4	-	1.65E+4	-	2.34E+8	3.55E+3
Pr-144	-	-	-	-	-	-	-
Nd-147	3.63E+4	3.94E+4	-	2.32E+4	-	1.42E+8	2.36E+3
W-187	3.55E+4	2.90E+4	-	-	-	7.84E+6	1.02E+4
Np-239	1.38E+3	1.30E+2	-	4.09E+2	-	2.10E+7	7.24E+1

Table 7.0-4

R_{aipo}, Vegetation Pathway Dose Factors - CHILD

(mrem/yr per μCi/m^3) for H-3 and C-14

(m^2 x mrem/yr per μCi/sec) for others

Nuclide	Bone	Liver	Thyroid	Kidney	Lung	GI-LLI	T.Body
H-3	-	4.01E+3	4.01E+3	4.01E+3	4.01E+3	4.01E+3	4.01E+3
C-14	3.50E+6	7.01E+5	7.01E+5	7.01E+5	7.01E+5	7.01E+5	7.01E+5
Na-24	3.83E+5	3.83E+5	3.83E+5	3.83E+5	3.83E+5	3.83E+5	3.83E+5
P-32	3.37E+9	1.58E+8	-	-	-	9.30E+7	1.30E+8
Cr-51	-	-	6.54E+4	1.79E+4	1.19E+5	6.25E+6	1.18E+5
Mn-54	-	6.61E+8	-	1.85E+8	-	5.55E+8	1.76E+8
Mn-56	-	1.90E+1	-	2.29E+1	-	2.75E+3	4.28E+0
Fe-55	8.00E+8	4.24E+8	-	-	2.40E+8	7.86E+7	1.31E+8
Fe-59	4.01E+8	6.49E+8	-	-	1.88E+8	6.76E+8	3.23E+8
Co-57	-	2.99E+7	-	-	-	2.45E+8	6.04E+7
Co-58	-	6.47E+7	-	-	-	3.77E+8	1.98E+8
Co-60	-	3.78E+8	-	-	-	2.10E+9	1.12E+9
Ni-63	3.95E+10	2.11E+9	-	-	-	1.42E+8	1.34E+9
Ni-65	1.05E+2	9.89E+0	-	-	-	1.21E+3	5.77E+0
Cu-64	-	1.11E+4	-	2.68E+4	-	5.20E+5	6.69E+3
Zn-65	8.12E+8	2.16E+9	-	1.36E+9	-	3.80E+8	1.35E+9
Zn-69	1.51E-5	2.18E-5	-	1.32E-5	-	1.38E-3	2.02E-6
Br-82	-	-	-	-	-	-	2.04E+6
Br-83	-	-	-	-	-	-	5.55E+0
Br-84	-	-	-	-	-	-	-
Br-85	-	-	-	-	-	-	-
Rb-86	-	4.52E+8	-	-	-	2.91E+7	2.78E+8
Rb-88	-	-	-	-	-	-	-
Rb-89	-	-	-	-	-	-	-
Sr-89	3.59E+10	-	-	-	-	1.39E+9	1.03E+9
Sr-90	1.24E+12	-	-	-	-	1.67E+10	3.15E+11
Sr-91	5.50E+5	-	-	-	-	1.21E+6	2.08E+4
Sr-92	7.28E+2	-	-	-	-	1.38E+4	2.92E+1
Y-90	2.30E+4	-	-	-	-	6.56E+7	6.17E+2
Y-91m	9.94E-9	-	-	-	-	1.95E-5	-
Y-91	1.87E+7	-	-	-	-	2.49E+9	5.01E+5
Y-92	1.56E+0	-	-	-	-	4.51E+4	4.46E-2
Y-93	3.01E+2	-	-	-	-	4.48E+6	8.25E+0
Zr-95	3.90E+6	8.58E+5	-	1.23E+6	-	8.95E+8	7.64E+5
Zr-97	5.64E+2	8.15E+1	-	1.17E+2	-	1.23E+7	4.81E+1
Nb-95	4.10E+5	1.59E+5	-	1.50E+5	-	2.95E+8	1.14E+5
Nb-97	4.90E-6	8.85E-7	-	9.82E-7	-	2.73E-1	4.13E-7
Mo-99	-	7.83E+6	-	1.67E+7	-	6.48E+6	1.94E+6
Tc-99m	4.65E+0	9.12E+0	-	1.33E+2	4.63E+0	5.19E+3	1.51E+2
Tc-101	-	-	-	-	-	-	-
Ru-103	1.55E+7	-	-	3.89E+7	-	3.99E+8	5.94E+6
Ru-105	9.17E+1	-	-	8.06E+2	-	5.98E+4	3.33E+1
Ru-106	7.45E+8	-	-	1.01E+9	-	1.16E+10	9.30E+7
Rh-103m	-	-	-	-	-	-	-
Rh-106	-	-	-	-	-	-	-
Ag-110m	3.22E+7	2.17E+7	-	4.05E+7	-	2.58E+9	1.74E+7
Sb-124	3.52E+8	4.57E+6	7.78E+5	-	1.96E+8	2.20E+9	1.23E+8
Sb-125	4.99E+8	3.85E+6	4.62E+5	-	2.78E+8	1.19E+9	1.05E+8
Te-125m	3.51E+8	9.50E+7	9.84E+7	-	-	3.38E+8	4.67E+7
Te-127m	1.32E+9	3.56E+8	3.16E+8	3.77E+9	-	1.07E+9	1.57E+8
Te-127	1.00E+4	2.70E+3	6.93E+3	2.85E+4	-	3.91E+5	2.15E+3
Te-129m	8.54E+8	2.39E+8	2.75E+8	2.51E+9	-	1.04E+9	1.33E+8
Te-129	1.15E-3	3.22E-4	8.22E-4	3.37E-3	-	7.17E-2	2.74E-4
Te-131m	1.54E+6	5.33E+5	1.10E+6	5.16E+6	-	2.16E+7	5.68E+5
Te-131	-	-	-	-	-	-	-
Te-132	6.98E+6	3.09E+6	4.50E+6	2.87E+7	-	3.11E+7	3.73E+6
I-130	6.21E+5	1.26E+6	1.38E+8	1.88E+6	-	5.87E+5	6.47E+5
I-131	1.43E+8	1.44E+8	4.76E+10	2.36E+8	-	1.28E+7	8.18E+7
I-132	9.20E+1	1.69E+2	7.84E+3	2.59E+2	-	1.99E+2	7.77E+1
I-133	3.59E+6	4.44E+6	8.25E+8	7.40E+6	-	1.79E+6	1.68E+6

Table 7.0-4

R_{aipo}, Vegetation Pathway Dose Factors - CHILD (CONT.)

(mrem/yr per μCi/m^3) for H-3 and C-14

(m^2 x mrem/yr per μCi/sec) for others

Nuclide	Bone	Liver	Thyroid	Kidney	Lung	GI-LLI	T.Body
I-134	1.70E-4	3.16E-4	7.28E-3	4.84E-4	-	2.10E-4	1.46E-4
I-135	6.54E+4	1.18E+5	1.04E+7	1.81E+5	-	8.98E+4	5.57E+4
Cs-134	1.60E+10	2.63E+10	-	8.14E+9	2.92E+9	1.42E+8	5.54E+9
Cs-136	8.06E+7	2.22E+8	-	1.18E+8	1.76E+7	7.79E+6	1.43E+8
Cs-137	2.39E+10	2.29E+10	-	7.46E+9	2.68E+9	1.43E+8	3.38E+9
Cs-138	-	-	-	-	-	-	-
Ba-139	5.11E-2	2.73E-5	-	2.38E-5	1.61E-5	2.95E+0	1.48E-3
Ba-140	2.77E+8	2.43E+5	-	7.90E+4	1.45E+5	1.40E+8	1.62E+7
Ba-141	-	-	-	-	-	-	-
Ba-142	-	-	-	-	-	-	-
La-140	3.23E+3	1.13E+3	-	-	-	3.15E+7	3.81E+2
La-142	2.32E-4	7.40E-5	-	-	-	1.47E+1	2.32E-5
Ce-141	1.23E+5	6.14E+4	-	2.69E+4	-	7.66E+7	9.12E+3
Ce-143	1.73E+3	9.36E+5	-	3.93E+2	-	1.37E+7	1.36E+2
Ce-144	1.27E+8	3.98E+7	-	2.21E+7	-	1.04E+10	6.78E+6
Pr-143	1.48E+5	4.46E+4	-	2.41E+4	-	1.60E+8	7.37E+3
Pr-144	-	-	-	-	-	-	-
Nd-147	7.16E+4	5.80E+4	-	3.18E+4	-	9.18E+7	4.49E+3
W-187	6.47E+4	3.83E+4	-	-	-	5.38E+6	1.72E+4
Np-239	2.55E+3	1.83E+2	-	5.30E+2	-	1.36E+7	1.29E+2

Table 7.0-4
R_{aipo}, Ground Plane Pathway Dose Factors
(m^2 x mrem/yr per μCi/sec)

Nuclide	Any Organ
H-3	-
C-14	-
Na-24	1.21E+7
P-32	-
Cr-51	4.68E+6
Mn-54	1.34E+9
Mn-56	9.05E+5
Fe-55	-
Fe-59	2.75E+8
Co-58	3.82E+8
Co-60	2.16E+10
Ni-63	-
Ni-65	2.97E+5
Cu-64	6.09E+5
Zn-65	7.45E+8
Zn-69	-
Br-83	4.89E+3
Br-84	2.03E+5
Br-85	-
Rb-86	8.98E+6
Rb-88	3.29E+4
Rb-89	1.21E+5
Sr-89	2.16E+4
Sr-90	-
Sr-91	2.19E+6
Sr-92	7.77E+5
Y-90	4.48E+3
Y-91m	1.01E+5
Y-91	1.08E+6
Y-92	1.80E+5
Y-93	1.85E+5
Zr-95	2.48E+8
Zr-97	2.94E+6
Nb-95	1.36E+8
Mo-99	4.05E+6
Tc-99m	1.83E+5
Tc-101	2.04E+4
Ru-103	1.09E+8
Ru-105	6.36E+5
Ru-106	4.21E+8
Rh-103m	-
Rh-106	-
Ag-110m	3.47E+9
Te-125m	1.55E+6
Te-127m	9.17E+4
Te-127	3.00E+3
Te-129m	2.00E+7
Te-129	2.60E+4
Te-131m	8.03E+6
Te-131	2.93E+4
Te-132	4.22E+6
I-130	5.53E+6
I-131	1.72E+7
I-132	1.24E+6
I-133	2.47E+6
I-134	4.49E+5
I-135	2.56E+6
Cs-134	6.75E+9
Cs-136	1.49E+8
Cs-137	1.04E+10

Table 7.0-4
R_{aipo}, Ground Plane Pathway Dose Factors (CONT.)
(m^2 x mrem/yr per μCi/sec)

Nuclide	Any Organ
Cs-138	3.59E+5
Ba-139	1.06E+5
Ba-140	2.05E+7
Ba-141	4.18E+4
Ba-142	4.49E+4
La-140	1.91E+7
La-142	7.36E+5
Ce-141	1.36E+7
Ce-143	2.32E+6
Ce-144	6.95E+7
Pr-143	-
Pr-144	1.83E+3
Nd-147	8.40E+6
W-187	2.36E+6
Np-239	1.71E+6

FIGURE 7.0-1

GASEOUS RADIOACTIVE EFFLUENT MONITORING AND VENTILATION SYSTEMS DIAGRAM

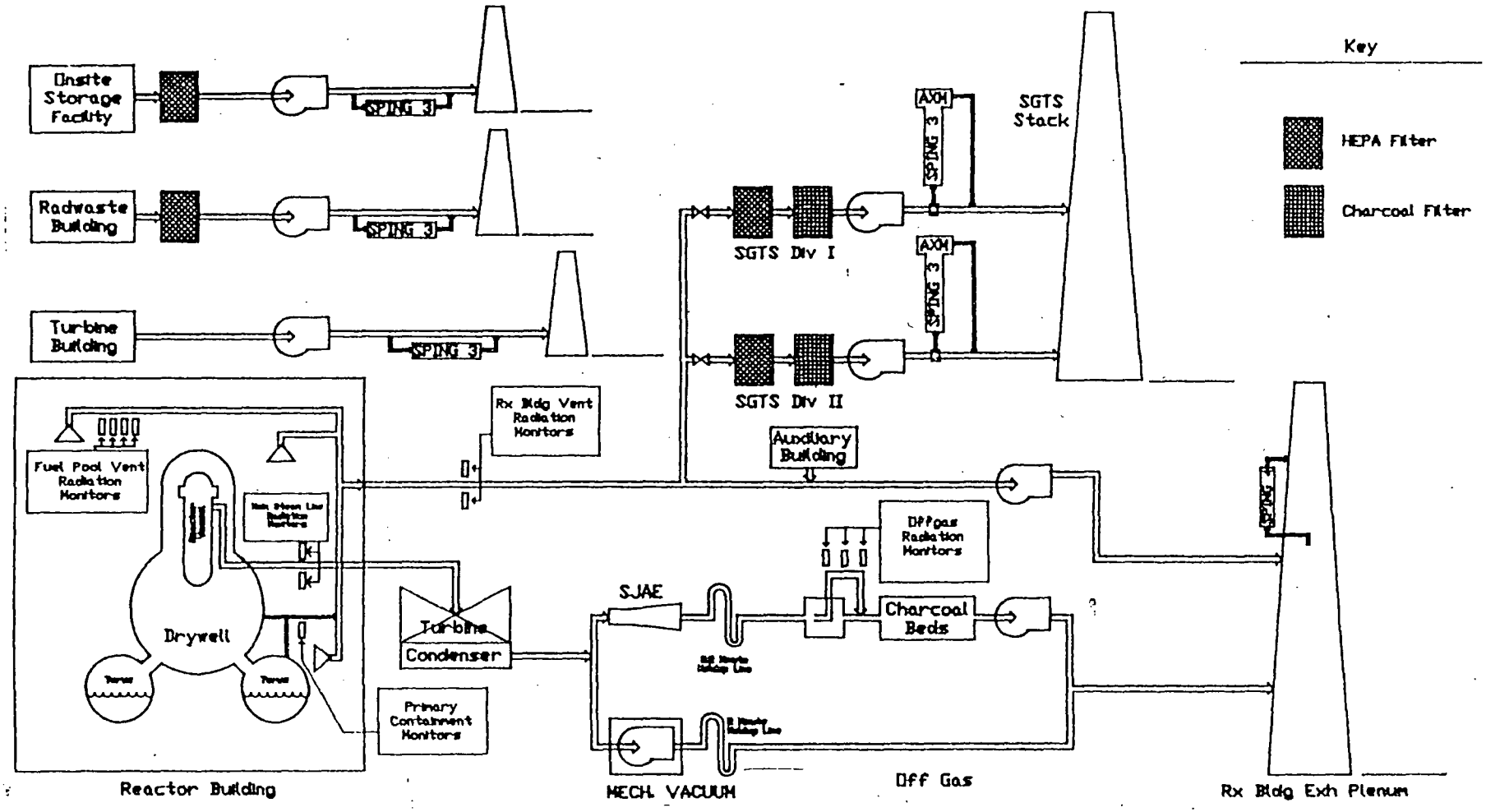

NOTE: The HEPA and charcoal filters identified on the Standby Gas Treatment System (SGTS) are engineered safety features and are not considered Ventilation Exhaust Treatment Systems (VETS). No effluent reduction was credited in the UFSAR 10CFR50 Appendix I evaluation for filters installed in plant ventilation systems. Fermi 2 conforms to 10CFR50 Appendix I without filtration installed.

SECTION 8.0

SPECIAL DOSE ANALYSIS

8.0 SPECIAL DOSE ANALYSES

8.1 Doses Due to Activities inside the SITE BOUNDARY

In accordance with ODCM 5.9.1.8, the Annual Radioactive Effluent Release Report submitted prior to May 1 of each year shall include an assessment of radiation doses from radioactive liquid and gaseous effluents to MEMBERS OF THE PUBLIC due to their activities inside the SITE BOUNDARY.

Two locations within the Fermi 2 SITE BOUNDARY are accessible to MEMBERS OF THE PUBLIC for activities unrelated to Detroit Edison operational and support activities. One is the over-water portion of the SITE BOUNDARY due east of the plant. Ice fishermen sometimes fish here during the winter. The other is the Fermi 2 Visitor's Center, outside the protected area (but inside the Owner Controlled Area), approximately 470 meters SSW of the Reactor Building. The Visitor's Center is open to the public and is routinely visited by MEMBERS OF THE PUBLIC, including school tour groups on a frequency of once per year.

Conservative assumptions of locations, exposure times, and exposure pathways for assessing doses from gaseous and liquid effluents due to activities inside the SITE BOUNDARY are presented in Table 8.0-1. The calculational methods presented in ODCM Sections 7.6 and 7.7 may be used for determining the maximum potential dose to a MEMBER OF THE PUBLIC based on the above assumptions. Alternatively, the effluent concentration values of Appendix B, Table 2, of the revised 10 CFR Part 20 may be used to assess dose since these concentrations, if continuously inhaled or ingested, produce a total effective dose equivalent of 50 mrem per year.

The potential dose from the fish pathway to a MEMBER OF THE PUBLIC engaged in ice fishing within the SITE BOUNDARY is accounted for by the modeling presented in ODCM Section 6.5. Therefore, no additional special dose analyses are required for this exposure pathway for reporting in the Annual Radioactive Effluent Release Report.

8.2 Doses to MEMBERS OF THE PUBLIC - 40 CFR 190

The Annual Radioactive Effluent Release Report shall also include an assessment of the radiation dose to the likely most exposed MEMBER OF THE PUBLIC for reactor releases and other nearby uranium fuel cycle sources (including dose contributions from effluents and direct radiation from onsite sources). For the likely most exposed MEMBER OF THE PUBLIC in the vicinity of the Fermi 2 site, the sources of exposure need consider only the radioactive effluents and direct exposure contribution from Fermi 2.

No other fuel cycle facilities contribute significantly to the cumulative dose to a MEMBER OF THE PUBLIC in the immediate vicinity of the site. Davis-Besse is the closest fuel cycle facility located about 20 miles to the SSE. Due to environmental dispersion, any routine releases from Davis-Besse would contribute insignificantly to the potential doses in the vicinity of Fermi 2.

As appropriate for demonstrating/evaluating compliance with the limits of ODCM 3.11.4 (40 CFR 190), the results of the environmental monitoring program may be used to provide data on actual measured levels of radioactive material in the actual pathways of exposure.

8.2.1 Effluent Dose Calculations

For purposes of implementing the surveillance requirements of ODCM 3.11.4 and the reporting requirements of ODCM 5.9.1.8, dose calculations for Fermi 2 may be performed using the calculational methods contained within this ODCM and the conservative controlling pathways and locations of Table 7.0-3. Liquid pathway doses may be calculated using Equation (6-10). Doses due to releases of radioiodines, tritium and particulates may be calculated based on Equation (7-14).

The following equations may be used for calculating the doses to MEMBERS OF THE PUBLIC from releases of noble gases. Equation (8-2) is not used for evaluating compliance with 40 CFR Part 190, since this regulation does not address skin dose. If noble gases are being released from more than one point, these equations must be used to evaluate each release point separately, and then the doses must be added to obtain the total noble gas dose.

$$D_{tb} = 3.17\,E-08 * X/Q * \sum\left(K_i * Q_i\right) \tag{8-1}$$

and

$$D_s = 3.17\,E-08 * X/Q * \sum\left[(L_i + 1.1M_i) * Q_i\right] \tag{8-2}$$

where:

D_{tb}	=	total body dose due to gamma emissions for noble gas radionuclides (mrem)
D_s	=	skin dose due to gamma and beta emissions for noble gas radionuclides (mrad)
X/Q	=	atmospheric dispersion to the offsite location (sec/m^3)
Q_i	=	cumulative release of noble gas radionuclide i over the period of interest (μCi)--may be determined according to Equation (7-8)
1.67E + 01	=	(1E + 03 ml/liter) * (1 min/60 sec)

K_i	=	total body dose factor due to gamma emissions from noble gas radionuclide i (mrem/yr per μCi/m^3) (from Table 7.0-2)
L_i	=	skin dose factor due to beta emissions from noble gas radionuclide i (mrem/yr per μCi/m^3) (from Table 7.0-2)
M_i	=	gamma air dose factor for noble gas radionuclide i (mrad/yr per μCi/m^3) (from Table 7.0-2)
1.1	=	mrem skin dose per mrad gamma air dose (mrem/mrad)
3.17 E - 08	=	1/3.15 E + 07 yr/sec

Average annual meterological dispersion parameters or meterological conditions concurrent with the release period under evaluation may be used (e.g., quarterly averages or year-specific annual averages).

8.2.2 Direct Exposure Dose Determination

From evaluations performed in the Fermi 2 Environmental Report, Section 5.3.4, the direct exposure to the highest offsite location from the Turbine Building N-16 skyshine dose has been calculated to be approximately 3 mrem/year. The introduction of hydrogen injection at Fermi 2 in 1997 (hydrogen water chemistry) tends to increase direct exposure. Direct exposure to offsite or onsite individuals may be evaluated based on the results of environmental measurements (e.g. area TLD and survey meter data) or by the use of a radiation transport and shielding calculational method. Only during atypical conditions will there exist any potential for significant onsite sources at Fermi 2 that would yield potentially significant offsite doses to a MEMBER OF THE PUBLIC. However, should a situation exist whereby the direct exposure contribution is potentially significant, onsite measurements, offsite measurements and calculational techniques will be used for determination of dose for assessing 40 CFR 190 compliance. The calculational techniques will be identified, reviewed, and approved at that time, and will be included in any report on doses due to such atypical conditions.

8.2.3 Dose Assessment Based on Radiological Environmental Monitoring Data

Normally, the assessment of potential doses to MEMBERS OF THE PUBLIC must be calculated based on the measured radioactive effluents at the plant. The resultant levels of radioactive material in the offsite environment are usually so minute as to be undetectable. The calculational methods presented in this ODCM are used for modeling the transport in the environment and the resultant exposure to offsite individuals.

The results of the radiological environmental monitoring program can provide input into the overall assessment of impact of plant operations and radioactive effluents. With measured levels of plant related radioactive material in principal pathways of exposure, a quantitative assessment of potential exposures can be performed. With the monitoring program not identifying any measurable levels, the data provides a qualitative assessment - a confirmatory demonstration of the negligible impact.

Dose modeling can be simplified into three basic parameters that can be applied in using environmental monitoring data for dose assessment:

$$\mathbf{D} = \mathbf{C} * \mathbf{U} * \mathbf{DF} \tag{8-3}$$

where:

D = dose or dose commitment

C = concentration in the exposure media, such as air concentration for the inhalation pathway, or fish, vegetation or milk concentration for the ingestion pathway

U = individual exposure to the pathway, such as hr/yr for direct exposure, kg/yr for ingestion pathway

DF = dose conversion factor to convert from an exposure or uptake to an individual dose or dose commitment

The applicability of each of these basic modeling parameters to the use of environmental monitoring data for dose assessment is addressed below:

Concentration - C

The main value of using environmental sampling data to assess potential doses to individuals is that the data represents actual measured levels of radioactive material in the exposure pathways. This eliminates one main uncertainty and the modeling has been removed - the release from the plant and the transport to the environmental exposure medium.

Environmental samples are collected on a routine frequency per the ODCM. To determine the annual average concentration in the environmental medium for use in assessing cumulative dose for the year, an average concentration should be determined based on the sampling frequency and measured levels:

$$\overline{C_i} = \sum\left(C_i * t\right) / 365 \tag{8-4}$$

where:

$\overline{C_i}$ = average concentration in the sampling medium for the year

C_i = concentration of each radionuclide i measured in the individual sampling medium

t = period of time that the measured concentration is considered representative of the sampling medium (typically equal to the sampling frequency; e.g., 7 days for weekly samples, 30 days for monthly samples).

If the concentration in the sampling medium is below the detection capabilities (i.e., less than Lower Limits of Detection (LLD), a value of zero should be used for C_i ($C_i = 0$).

Exposure - U

Default Exposure Values (U) as recommended in Regulatory Guide 1.109 are presented in Table 8.0-2. These values should be used only when specific data applicable to the environmental pathway being evaluated is unavailable.

Also, the routine radiological environmental monitoring program is designed to sample/monitor the environmental media that would provide early indications of any measurable levels in the environment but not necessarily levels to which any individual is exposed. For example, sediment samples are collected in the area of the liquid discharge: typically, no individuals are directly exposed. To apply the measured levels of radioactivity in samples that are not directly applicable to exposure to real individuals, the approach recommended is to correlate the location and measured levels to actual locations of exposure.

Hydrological or atmospheric dilution factors can be used to provide reasonable correlations of concentrations (and doses) at other locations. The other alternative is to conservatively assume a hypothetical individual at the sampling location. Doses that are calculated in this manner should be presented as hypothetical and very conservatively determined - actual exposure would be much less. Samples collected from the Monroe water supply intake should be used for estimating the potential drinking water doses. Other water samples collected, such as near field dilution area, are not applicable to this pathway.

Dose Factors - DF

The dose factors are used to convert the intake of the radioactive material to an individual dose commitment. Values of the dose factors are presented in NRC Regulatory Guide 1.109. The use of the RG 1.109 values applicable to the exposure pathway and maximum exposed individual is referenced in Table 8.0-2.

Assessment of Direct Exposure Doses from Noble Gases

Thermoluminescent Dosimeters (TLD) are routinely used to assess the direct exposure component of radiation doses in the environment. However, because routine releases of radioactive material (noble gases) are so low, the resultant direct exposure doses are also very low. A study* performed for the NRC concluded that it was generally impractical to distinguish any plant contribution to the natural background radiation levels (direct exposure) below around 10 mrem per year. Therefore, for routine releases from nuclear power plants the use of TLD is mainly confirmatory - ensuring actual exposures are within the expected natural background variation.

For releases of noble gases, environmental modeling using plant measured releases and atmospheric transport models as presented in ODCM Sections 7.6 and 8.2.1 represents the best method of assessing potential environmental doses. However, under unusual conditions, direct radiation from noble gas concentrations could be sufficient to cause significant increases in TLD readings; any observed variations in TLD measurements outside the norm should be evaluated.

---

* NUREG/CR-0711, Evaluation of Methods for the Determination of X- and Gamma-Ray Exposure Attributable to a Nuclear Facility Using Environmental TLD Measurements, Gail dePlanque, June 1979, USNRC.

TABLE 8-1

Assumptions for Assessing Doses Due to Activities inside SITE BOUNDARY

	Ice Fishing	Visitor's Center
Distance/ Direction:	470 meters / E	470 meters / SSW
Estimated Exposure Time:	240 hr/yr (20 hr/week over 3 month period)	4 hr/yr (4 hr/visit, 1 visit per year)
Exposure Pathways:	direct exposure from noble gases	direct exposure from noble gases
	inhalation of tritium, iodines, particulates	inhalation of tritium, iodines particulates
Meteorological Dispersion:	annual average (as determined for year being evaluated)	annual average (as determined for year being evaluated)
	6.48E-6 sec/m^3*	2.54E-6 sec/m^3*

* Annual average X/Q values for 1991. These values are shown as examples of the range of values to be expected.

TABLE 8-2

Recommended Exposure Rates in Lieu of Site Specific Data*

Exposure Pathway	Maximum Exposed Age Group	Exposure Rates	Table Reference for Dose Factor from RG 1.109
Liquid Releases			
Fish	Adult	21 kg/y	E-11
Drinking Water	Adult	730 l/y	E-11
Bottom Sediment	Teen	67 h/y	E-6
Atmospheric Releases			
Inhalation	Teen	8,000 m^3/y	E-8
Direct Exposure	All	6,100 h/y**	N/A
Leafy Vegetables	Child	26 kg/y	E-13
Fruits, Vegetables and Grain	Teen	630 kg/y	E-12
Milk	Infant	330 l/y	E-14

* Adapted from Regulatory Guide 1.109, Table E-5. This table is not a complete list of exposure rates; other applicable values may be found in Regulatory Guide 1.109.

** Net exposure of 6,100 h/y is based on the total 8760 hours per year adjusted by a 0.7 shielding factor as recommended in Regulatory Guide 1.109.

END OF SECTION 8.0

SECTION 9.0

ASSESSMENT OF LAND USE CENSUS

9.0 ASSESSMENT OF LAND USE CENSUS DATA

A Land Use Census (LUC) is conducted annually in the vicinity of the Fermi 2 site. This census fulfills two main purposes: 1) Meet requirements of ODCM 3.12.2 for identifying controlling location/pathway for dose assessment of ODCM 3.11.2.3; and 2) provide data on actual exposure pathways for assessing realistic doses to MEMBERS OF THE PUBLIC.

9.1 Land Use Census as Required by ODCM 3.12.2

As required by ODCM 3.12.2, a land use census shall be conducted during the growing season at least once per twelve months. The purpose of the census is to identify within a 5 mile distance the location in each of the 16 meterological sectors of all milk producing animals, all meat producing animals, all gardens larger than 500 ft^2 producing broadleaf vegetation, and the closest residence to the plant. The data from the LUC is used for updating the location/pathway for dose assessment and for updating the Radiological Environmental Monitoring Program.

If the census identifies a location/pathway(s) yielding a higher potential dose to a MEMBER OF THE PUBLIC than currently being assessed as required by ODCM 3.11.2.3 (and ODCM Section 7.7 and Table 7.0-3), this new location pathway(s) shall be used for dose assessment. Table 7.0-3 shall be updated to include the currently identified controlling location/pathway(s). Also, if the census identifies a location(s) that yields a calculated potential dose (via the same exposure pathway) 20% greater than a location currently included in the Radiological Environmental Monitoring Program, the new location(s) shall be added to the program within 30 days, unless permission to take samples cannot be obtained from the affected landowner. The sampling location(s), excluding control locations, having the lowest calculated dose may be deleted from the program after October 31 following the current census. As required by ODCM 3.12.2 and 5.9.1.8, the new location/pathway(s) shall be identified in the next Annual Radioactive Effluent Release Report. The following guideline shall be used for assessing the results from the land use census to ensure compliance with ODCM 3.12.2.

9.1.1 Data Compilation

1. Compile all locations and pathways of exposure as identified by the land use census.

2. From this compiled data, identify any changes from the previous year's census. Identify the current controlling location/pathway (critical receptor) used in ODCM Table 7.0-3. Also, identify any location currently included in the REMP (Table 10-1).

3. Perform relative dose calculations based on actual Fermi 2 gaseous effluent releases for a recent period of reactor operation, using the pathway dose equations of the ODCM. In identifying the critical receptor for Table 7.0-3, all age groups and all pathways relevant to ODCM 3.11.2.3 that may be present at each evaluated location are considered. The critical receptor is assumed to be a member of the age group with the highest calculated dose to the maximally exposed organ due to I-131, I-133, tritium, and particulates with half lives greater than 8 days. Other receptors may have higher doses to other organs than the critical receptor has to those organs.

4. Formulate a listing of locations of high dose significance in descending order of relative dose significance. Include the relative dose significance in the listing.

9.1.3 Program Updates

1. If any receptor is identified with a higher relative dose than the current critical receptor in ODCM Table 7.0-3, this receptor and its associated location and pathways should replace the previously identified critical receptor information in Table 7.0-3.

2. The Land Use Census data should be used to revise the REMP and Section 10.0 of the ODCM in accordance with ODCM 3.12.2, Action Item b.

3. Any changes in either the controlling location/pathway(s) (critical receptor) for the ODCM dose calculations (Section 7.7 and Table 7.0-3) or the REMP (ODCM Section 10.0 and Table 10-1) shall be reported to NRC in accordance with ODCM 3.12.2, Action Items a. and b. and ODCM 5.9.1.8.

   NOTE: As permitted by footnote to ODCM 3.12.2, broadleaf vegetation sampling may be performed at the SITE BOUNDARY in two locations, in different sectors with highest predicted D/Qs, in lieu of the garden census. Also, for conservatism in dose assessment for compliance with ODCM 3.11.2.3 (see also ODCM Section 7.7 and Table 7.0-3), hypothetical exposure location/pathway(s) and conservative dispersion factors may be assumed (e.g., milk cow at 5 mile location or garden at SITE BOUNDARY in highest D/Q sector). By this approach, the ODCM is not subject to frequent revision as pathways and locations change from year to year. A verification that the hypothetical pathway remains conservative and valid is still required. Also, for NRC reporting, the actual pathways and doses should be reported along with the hypothetical. The reporting of the actual pathway and doses provides a formal documentation of the more realistic dose impact.

Note: Page content was last changed with ODCM Revision 16.

9.2 Land Use Census to Support Realistic Dose Assessment

The LUC provides data needed to support the special dose analyses of the ODCM Section 8.0. Activities inside the SITE BOUNDARY should be periodically reviewed for dose assessment as required by ODCM 5.9.1.8 (see also ODCM Section 8.1). Assessment of realistic doses to MEMBERS OF THE PUBLIC is required by ODCM 3.11.4 for demonstrating compliance with the EPA Environmental Dose Standard, 40 CFR 190 (ODCM Section 8.2).

To support these dose assessments, the LUC shall include use of Lake Erie water on and near the site. The LUC shall include data on Lake Erie use obtained from local and state officials. Reasonable efforts shall be made to identify individual irrigation and potable water users, and industrial and commercial water users whose source is Lake Erie. This data is used to verify the pathways of exposure used in ODCM Section 6.5.

END OF SECTION 9.0

SECTION 10.0

RADIOLOGICAL ENVIRONMENTAL MONITORING PROGRAM

10.0 RADIOLOGICAL ENVIRONMENTAL MONITORING PROGRAM

The Radiological Environmental Monitoring Program (REMP) is conducted in accordance with the requirements of ODCM 3.12.1. The sampling and analysis program described herein was developed to provide representative measurements of radiation and radioactive materials resulting from station operation in the principal pathways of exposure of MEMBERS OF THE PUBLIC. This monitoring program implements Section IV.B.2 of Appendix I to 10 CFR Part 50 and thereby supplements the radiological effluent control program by verifying that the measurable concentrations of radioactive materials and levels of radiation are not higher than expected on the basis of the effluent measurements and the modeling of the environmental exposure pathways. Guidance for the development of this monitoring program is provided by the NRC Radiological Assessment Branch Technical Position on Environmental Monitoring, Revision 1, November 1979.

10.1 Sampling Locations

Sampling locations as required by ODCM 3.12.1 are described in Table 10.0-1.

NOTE: For purposes of implementing ODCM 3.12.2, sampling locations will be modified as required to reflect the findings of the annual land use census as described in ODCM Section 9.1 and as required by other contingencies (e.g. unavailability of milk from a listed location). Such changes will be documented in plant records and reflected in the next ODCM revision, the next Annual Effluent Release Report, and the next Annual Radiological Environmental Operating Report. Also, if the circumstances of such changes involve a possible change in the maximally exposed individual evaluated for ODCM Control 3.11.2.3, the identity of this individual will be reevaluated.

10.2 Reporting Levels

ODCM 3.12.1, Action b, describes criteria for a Special Report to the NRC if levels of plant-related radioactive material, when averaged over a calendar quarter, exceed the prescribed levels of ODCM Table 3.12.1-2. The reporting levels are based on the design objective doses of 10 CFR 50, Appendix I (i.e., the annual limits of ODCM 3.11.1.2, 3.11.2.2 and 3.11.2.3). In other words, levels of radioactive material in the respective sampling medium equal to the prescribed reporting levels are representative of potential annual doses of 3 mrem, total body or 10 mrem, maximum organ from liquid pathways; or 5 mrem, total body, or 15 mrem, maximum organ for the gaseous effluent pathway. These potential doses are modeled on the maximum individual exposure or consumption rates of NRC Regulatory Guide 1.109.

The evaluation of potential doses should be based solely on radioactive material resulting from plant operation. As stated in ODCM 3.12.1, Action b, the report shall also be submitted if radionuclides other than those in ODCM Table 3.12.1-2 are detected (and are a result of plant effluents) and the potential dose exceeds the above annual design objectives. The method described in ODCM Section 8.2.3 may be used for assessing the potential dose and required reporting for radionuclides other than those in ODCM Table 3.12.1-2.

10.3 Interlaboratory Comparison Program

A major objective of this program is to assist laboratories involved in environmental radiation measurements to develop and maintain both an intralaboratory and an interlaboratory quality control program. This is accomplished through a laboratory intercomparison study ("cross-check") program involving environmental media and a variety of radionuclides with activities at or near environmental levels.

Simulated environmental samples, containing known amounts of one or more radionuclides, are prepared and routinely distributed to Detroit Edison's contract environmental laboratory, which performs the required analyses. The analysis results are then compared to the known concentrations in the samples. The program thus enables the laboratory to document the precision and accuracy of its radiation data, and identify instrument and procedural problems.

The environmental laboratory is required to participate in an Interlaboratory Comparison Program and to submit QA Program Progress Summary Reports to Detroit Edison on an annual basis. These reports contain performance data summaries on blind spiked analyses, and explanations of deviations from expected results. A summary of the Interlaboratory Comparison Program results obtained is required to be included in the Annual Radiological Environmental Operating Report pursuant to ODCM 5.9.1.7.

Participation in an Interlaboratory Comparison Program ensures that an independent check on the precision and accuracy of the measurements of radioactive material in environmental sample matrices is performed as part of the QA Program for environmental monitoring in order to demonstrate that the results are valid for the purpose of Section IV.B.2 of Appendix I to 10 CFR Part 50.

TABLE 10.0-1

RADIOLOGICAL ENVIRONMENTAL MONITORING PROGRAM
FERMI 2 SAMPLE LOCATIONS AND ASSOCIATED MEDIA

KEY

1 -	T	TLD Locations (Pg. 10-5 through 10-9)
2 -	S	Sediments Locations (Pg. 10-10)
3 -	F	Fish Locations (Pg. 10-10)
4 -	M	Milk Locations (Pg. 10-11)
5 -	DW	Drinking Water Locations (Pg. 10-12)
6 -	SW	Surface Water Locations (Pg. 10-12)
7 -	GW	Ground Water Locations (Pg. 10-12)
8 -	API	Air Particulate/Iodine Locations (Pg. 10-13)
9 -	FP	Food Products Locations (Pg. 10-14)

TABLE 10.0-1

Radiological Environmental Monitoring Program, Fermi 2 Sample Locations and Associated Media

Direct Radiation

Station Number	*Meteorological Sector/Azimuth Direction*	*Distance from Reactor (Approx.)*	*Description*	*Media*	*Frequency*
T1	NE/38°	1.3 mi	Estral Beach Pole on Lakeshore, 23 Poles S of Lakeview (Special Area)	Direct Radiation	Q
T2	NNE/22°	1.2 mi	Pole at termination of Brancheau St. (Special Area)	Direct Radiation	Q
T3	N/9°	1.1 mi	Pole, NW Corner of Swan Boat Club Fence (Special Area)	Direct Radiation	Q
T4	NNW/337°	0.6 mi	Site Boundary and Toll Rd, on Site Fence by API #2	Direct Radiation	Q
T5	NW/313°	0.6 mi	Site Boundary and Toll Rd, on Site Fence by API #3	Direct Radiation	Q
T6	WNW/294°	0.6 mi	Site boundary fence at south end of N. Bullit Rd.	Direct Radiation	Q
T7	W/270°	14.0 mi	Pole, at Michigan Gas substation on N. Custer Rd., 0.66 miles W of Doty Rd. (Control)	Direct Radiation	Q
T8	NW/305°	1.9 mi	Pole on Post Rd. near NE Corner of Dixie Hwy. and Post Rd.	Direct Radiation	Q
T9	NNW/334°	1.5 mi	Pole, NW Corner of Trombley and Swan View Road	Direct Radiation	Q
T10	N/6°	2.1 mi	Pole, S Side of Masserant - 2 Poles W of Chinavare	Direct Radiation	Q
T11	NNE/23°	6.2 mi	Pole, NE Corner of Milliman and Jefferson	Direct Radiation	Q
T12	NNE/29°	6.3 mi	Pointe Mouillee Game Area - Field Office, Pole near Tree, N Area of Parking Lot	Direct Radiation	Q
T13	N/356°	4.1 mi	Labo and Dixie Hwy - Pole on SW Corner with Light	Direct Radiation	Q
T14	NNW/337°	4.4 mi	Labo and Brandon - Pole on SE Corner near RR	Direct Radiation	Q

6/08

TABLE 10.0-1

Radiological Environmental Monitoring Program, Fermi 2 Sample Locations and Associated Media

Direct Radiation

Station Number	*Meteorological Sector/Azimuth Direction*	*Distance from Reactor (Approx.)*	*Description*	*Media*	*Frequency*
T15	NW/315°	3.9 mi	Pole, behind building at the corner of Swan Creek and Mill St.	Direct Radiation	Q
T16	WNW/283°	4.9 mi	Pole, SE corner of War and Post Rds.	Direct Radiation	Q
T17	W/271°	4.9 mi	Pole, NE Corner of Nadeau and LaPrad near Mobile Home Park	Direct Radiation	Q
T18	WSW/247°	4.8 mi	Pole, NE Corner of Mentel and Hurd	Direct Radiation	Q
T19	SW/236°	5.2 mi	Fermi siren pole on Waterworks Rd, NE corner of intersection—Sterling State Park Rd Entrance Drive/Waterworks	Direct Radiation	Q
T20	WSW/257°	2.7 mi	Pole, S Side of Williams Rd. - 9 Poles W of Dixie Hwy. (Special Area)	Direct Radiation	Q
T21	WSW/239°	2.7 mi	Pole, N Side of Pearl at Parkview - Woodland Beach (Special Area)	Direct Radiation	Q
T22	S/172°	1.2 mi	Pole, N Side of Pointe Aux Peaux 2 Poles W of Long - Site Boundary	Direct Radiation	Q
T23	SSW/195°	1.1 mi	Pole, S Side of Pointe Aux Peaux - 1 Pole W of Huron next to Vent Pipe - Site Boundary	Direct Radiation	Q
T24	SW/225°	1.2 mi	Fermi Gate along Pointe Aux Peaux Rd.- on fence wire W of Gate - Site Boundary	Direct Radiation	Q
T25	WSW/252°	1.5 mi	Pole, Toll Rd. - 12 Poles S of Fermi Dr.	Direct Radiation	Q
T26	WSW/259°	1.1 mi	Pole, Toll Rd. - 6 Poles S of Fermi Dr.	Direct Radiation	Q
T27	SW/225°	6.8 mi	Pole, NE Corner of McMillan and East Front St. (Special Area)	Direct Radiation	Q
T28	SW/229°	10.7 mi	Pole, N Side of Mortar Creek between Hull and LaPlaisance	Direct Radiation	Q
T29	WSW/237°	10.3 mi	Pole, NE Corner of S Dixie and Albain	Direct Radiation	Q

6108

6108

TABLE 10.0-1

Radiological Environmental Monitoring Program, Fermi 2 Sample Locations and Associated Media

Direct Radiation

Station Number	Meteorological Sector/Azimuth Direction	Distance from Reactor (Approx.)	Description	Media	Frequency
T30	WSW/247°	7.8 mi	E Side S end of footbridge, St. Mary's Park corner of Elm and Monroe St. (Special Area)	Direct Radiation	Q
T31	WSW/255°	9.6 mi	1st Pole W of Entrance Drive Milton "Pat" Munson Recreational Reserve - N. Custer Rd. (Control)	Direct Radiation	Q
T32	WNW/295°	10.3 mi	Pole, Corner of Stony Creek and Finzel Rds.	Direct Radiation	Q
T33	NW/317°	9.2 mi	Pole, W Side of Grafton Rd. 1 Pole N of Ash/Grafton Intersection	Direct Radiation	Q
T34	NNW/338°	9.8 mi	Pole, SW Corner of Port Creek and Will-Carleton Rd	Direct Radiation	Q
T35	N/359°	6.9 mi	Pole, S Side of S. Huron River Dr. across from Race St. (Special Area)	Direct Radiation	Q
T36	N/358°	9.1 mi	Pole, NE Corner of Gibraltar and Cahill Rds.	Direct Radiation	Q
T37	NNE/21°	9.8 mi	Pole, S Corner of Adams and Gibraltar (across from Humbug Marina)	Direct Radiation	Q
T38	WNW/294°	1.7 mi	Residence - 6594 N. Dixie Hwy.	Direct Radiation	Q
T39	S/176°	0.3 mi	SE Corner of Protected Area Fence (PAF)	Direct Radiation	Q
T40	S/170°	0.3 mi	Midway along OBA - PAF	Direct Radiation	Q
T41	SSE/161°	0.2 mi	Midway between OBA and Shield Wall - PAF	Direct Radiation	Q
T42	SSE/149°	0.2 mi	Midway along Shield Wall - PAF	Direct Radiation	Q
T43	SE/131°	0.1 mi	Midway between Shield Wall and Aux Boilers - PAF	Direct Radiation	Q
T44	ESE/109°	0.1 mi	Opposite OSSF Door - PAF	Direct Radiation	Q

16/08

16/08

TABLE 10.0-1

Radiological Environmental Monitoring Program, Fermi 2 Sample Locations and Associated Media

Direct Radiation

Station Number	*Meteorological Sector/Azimuth Direction*	*Distance from Reactor (Approx.)*	*Description*	*Media*	*Frequency*
T45	E/86°	0.1 mi	NE Corner - PAF		
T46	ENE/67°	0.2 mi	NE Side Barge Slip - on Fence	Direct Radiation	Q
T47	S/185°	0.1 mi	South of Turbine Bldg. rollup door on PAF	Direct Radiation	Q
T48	SW/235°	0.2 mi	30 ft. from corner of AAP on PAF		
T49	WSW/251°	1.1 mi	Corner of site boundary fence north of NOC along Critical Path Rd.	Direct Radiation	Q
T50	W/270°	0.9 mi	Site boundary fence near main gate by the south Bullit St. sign	Direct Radiation	Q
T51	N/3°	0.4 mi	Site boundary fence north of North Cooling Tower	Direct Radiation	Q
T52	NNE/20°	0.4 mi	Site boundary fence at the corner of Arson and Tower	Direct Radiation	Q
T53	NE/55°	0.2 mi	Site boundary fence east of South Cooling Tower	Direct Radiation	Q
T54	S/189°	0.3 mi	Pole, next to Fermi 2 Visitors Center	Direct Radiation	Q
T55	WSW/251°	3.3 mi	Pole, N side of Nadeau Rd, across from Sodt Elementary School Marquee	Direct Radiation	Q
T56	WSW/255°	4.9 mi	Pole, entrance to Jefferson Middle School on Stony Creek Rd.	Direct Radiation	Q
T57	W/260°	2.7 mi	Pole, north side of Williams Rd. across from Jefferson High School entrance	Direct Radiation	Q
T58	WSW/249°	4.9 mi	Pole, west of Hurd Elementary School Marquee	Direct Radiation	Q
T59	NW/325°	2.6 mi	Pole, north of St. Charles Church entrance on Dixie Hwy.	Direct Radiation	Q
T60	NNW/341°	2.5 mi	1st pole north of North Elementary School entrance on Dixie Hwy.	Direct Radiation	Q

16/08

TABLE 10.0-1

Radiological Environmental Monitoring Program, Fermi 2 Sample Locations and Associated Media

Direct Radiation

Station Number	*Meteorological Sector/Azimuth Direction*	*Distance from Reactor (Approx.)*	*Description*	*Media*	*Frequency*
T61	W/268°	10.1 mi	Pole, SW Corner of Stewart and Raisinville Rds.	Direct Radiation	Q
T62	SW/232°	9.7 mi	Pole, NW Corner of Albain and Hull Rds.	Direct Radiation	Q
T63	WSW/245°	9.6 mi	Pole, Corner of Dunbar and Telegraph Rds.	Direct Radiation	Q
T64	WNW/286°	0.2 mi	W of switchgear yard on PAF	Direct Radiation	Q
T65	NW/322°	0.1 mi	PAF switchgear yard area NW of RHR complex	Direct Radiation	Q
T66	NE/50°	0.1 mi	Behind Bldg. 42 on PAF	Direct Radiation	Q
T67	NNW/338°	0.2 mi	Site boundary fence W of S cooling tower	Direct Radiation	Q
T68	WNW/303°	0.6 mi	Langton Rd seven poles E of Leroux Rd	Direct Radiation	Q
T69	NW/306°	0.8 mi	Langton Rd five poles E of Leroux Rd	Direct Radiation	Q
T70	NNW/333°	1.1 mi	Leroux Rd last pole N of Fermi Dr	Direct Radiation	Q
T71	WNW/300°	1.1 mi	Leroux Rd six poles N of Fermi Dr	Direct Radiation	Q

6/08

TABLE 10.0-1

Radiological Environmental Monitoring Program, Fermi 2 Sample Locations and Associated Media

Fish and Sediment

Station Number	*Meteorological Sector/Azimuth Direction*	*Distance from Reactor (Approx.)*	*Description*	*Media*	*Frequency*
SEDIMENTS					
S-1	SSE/165°	0.9 mi	Pointe Aux Peaux, Shoreline to 500 ft. offshore sighting directly to Land Base Water Tower	Sediment	SA
S-2	E/81°	0.2 mi	Fermi 2 Discharge, approx. 200 ft. offshore	Sediment	SA
S-3	NE/39°	1.1 mi	Estral Beach, approx. 200 ft. offshore, off North shoreline where Swan Creek and Lake Erie meet	Sediment	SA
S-4	WSW/241°	3.0 mi	Indian Trails Community Beach	Sediment	SA
S-5	NNE/20°	11.7 mi	DECo's Trenton Channel Power Plant intake area (Control)	Sediment	SA
FISH					
F-1	NNE/31°	9.5 mi	Celeron Island (Control)	Fish	SA
F-2	E/86°	0.4 mi	Fermi 2 Discharge (Approx. 1200 ft. offshore)	Fish	SA
F-3	SW/227°	3.5 mi	Breast Bay Area (Control)	Fish	SA

TABLE 10.0-1

Radiological Environmental Monitoring Program, Fermi 2 Sample Locations and Associated Media

Milk/Grass

Station Number	*Meteorological Sector/Azimuth Direction*	*Distance from Reactor (Approx.)*	*Description*	*Media*	*Frequency*
M-2	NW/319°	5.4 mi	Reaume Farm -2705 E. Labo	Milk	M-SM
M-8	WNW/289°	9.9 mi	Calder Dairy - 9334 Finzel Rd.	Milk	M-SM

TABLE 10.0-1

Radiological Environmental Monitoring Program, Fermi 2 Sample Locations and Associated Media

Water

Station Number	*Meteorological Sector/Azimuth Direction*	*Distance from Reactor (Approx.)*	*Description*	*Media*	*Frequency*
DRINKING WATER					
DW-1	S/174°	1.1 mi	Monroe Water Station N Side of Pointe Aux Peaux 1/2 Block W of Long Rd.	Drinking Water	M
DW-2	N/8°	18.5 mi	Detroit Water Station, 14700 Moran Rd. Allen Park (Control)	Drinking Water	M
SURFACE WATER					
SW-2	NNE/20°	11.7 mi	DECo's Trenton Channel Power Plant Intake Structure (Screenhouse #1) (Control)	Surface Water	M
SW-3	SSE/160°	0.2 mi	DECo's Fermi 2 General Service Water Intake Structure	Surface Water	M
SITE WELLS					
GW-1	S/175°	0.4 mi	Approx. 100 ft. W of Lake Erie, EF-1 Parking lot Groundwater near gas fired peakers	Groundwater	Q
GW-2	SSW/208°	1.0 mi	4 ft. S of Pointe Aux Peaux (PAP) Rd. Fence 427 ft. W of where PAP crosses over Stony Point's Western Dike	Groundwater	Q
GW-3	SW/226°	1.0 mi	143 ft. W of PAP Rd. Gate, 62 ft. N of PAP Rd. Fence	Groundwater	Q
GW-4	WNW/299°	0.6 mi	42 ft. S of Langton Rd., 8 ft. E of Toll Rd. Fence	Groundwater	Q

TABLE 10.0-1

Radiological Environmental Monitoring Program, Fermi 2 Sample Locations and Associated Media

Air Particulate Air Iodine

Station Number	Meteorological Sector/Azimuth Direction	Distance from Reactor (Approx.)	Description	Media	Frequency
API-1	NE/39°	1.4 mi	Estral Beach Pole on Lakeshore, 18 Poles S of Lakeview (Nearest Community with highest χ/Q)	Radioiodine Particulates	W W
API-2	NNW/337°	0.6 mi	Site Boundary and Toll Road, on Site Fence by T-4	Radioiodine Particulates	W W
API-3	NW/313°	0.6 mi	Site Boundary and Toll Road, on Site Fence by T-5	Radioiodine Particulates	W W
API-4	W/270°	14.0 mi	Pole, at Michigan Gas substation on N. Custer Rdl, 0.66 miles W of Doty Rd. (control)	Radioiodine Particulates	W W
API-5	S/188°	1.2 mi	Pole, N corner of Pointe Aux Peaux and Dewey Rd.	Radioiodine Particulates	W W

Note: Page content was last changed with ODCM Revision 16.

TABLE 10.0-1

Radiological Environmental Monitoring Program, Fermi 2 Sample Locations and Associated Media

Food Products

Station Number	*Meteorological Sector/Azimuth Direction*	*Distance from Reactor (Approx.)*	*Description*	*Media*	*Frequency*
FP-1	NNE/21°	3.8 mi	9501 Turnpike Highway	Food Products	M (when available)
FP-9	W/261°	10.9 mi	4074 North Custer Road	Food Products	M (when available)

Note: Page content was last changed with ODCM Revision 16.

TABLE 10.0-1

Radiological Environmental Monitoring Program, Fermi 2 Sample Locations and Associated Media

Land Use Census Closest Residences

Station Number	Meteorological Sector/Azimuth Direction	Distance from Reactor (Approx.)	Description	Media	Frequency
	NE	1.1 mi			
	NNE	1.0 mi			
	N	1.1 mi			
	NNW	1.1 mi			
	NW	1.1 mi			
	WNW	0.7 mi			
	W	1.2 mi			
	WSW	1.6 mi			
	SW	1.3 mi			
	SSW	1.1 mi			
	S	1.0 mi			
	ESE-SSE		Lake Erie		

END OF SECTION 10.0

Note: Page content was last changed with ODCM Revision 16.