GE Hitachi Nuclear Energy

Richard E. Kingston
Vice President, ESBWR Licensing

PO Box 780
3901 Castle Hayne Road, M/C A-65
Wilmington, NC 28402 0780
USA

T 910 819 6192
F 910 362 6192
rick.kingston@ge.com

MFN 09-286 Docket No. 52-010

May 4, 2009

U.S. Nuclear Regulatory Commission
Document Control Desk
Washington, D.C. 20555-0001

Subject: **Response to Portion of NRC Request for Additional Information Letter No. 301 Related to ESBWR Design Certification Application ESBWR RAI Numbers 22.5-22, S01, 22.5-24 S01 and 22.5-30 through 22.5-46**

The purpose of this letter is to submit the GE Hitachi Nuclear Energy (GEH) response to the U.S. Nuclear Regulatory Commission (NRC) Request for Additional Information (RAI) dated January 29, 2009 (Reference 1). Previous correspondence regarding RAIs 22.5-22 S01 and 22.5-24 S01 was transmitted in References 2 though 4.

The GEH responses to RAI Numbers 22.5-22, S01, 22.5-24 S01 and 22.5-30 through 22.5-46 are in Enclosure 1.

If you have any questions or require additional information, please contact me.

Sincerely,

Richard E. Kingston

Richard E. Kingston
Vice President, ESBWR Licensing

Reference:

1. MFN 09-093, Letter from U.S. Nuclear Regulatory Commission to Robert E. Brown, GEH, Request For Additional Information Letter No. 301 Related To ESBWR Design Certification Application, dated January 29, 2009.

2. MFN 08-588, Response to Portion of NRC Request for Additional Information Letter No. 186 Related to E5BWR Design Certification Application E5BWR RAI Numbers 19.1-96502,19.2-90, 19.2-91, and 22.5-24, dated July 17, 2008

3. MFN 08-637, *Response to Portion of NRC Request for Additional Information Letter No. 186 Related to E5BWR Design Certification Application E5BWR RAI Number 22.5-22,* dated August 22, 2008

4. MFN 08-426, Letter from U.S. Nuclear Regulatory Commission to Robert E. Brown, GEH, *Request For Additional Information Letter No. 186 Related To ESBWR Design Certification Application*, dated April 23, 2008.

Enclosures:

1. Response to Portion of NRC Request for Additional Information Letter No. 301 Related to ESBWR Design Certification Application DCD Tier 1 RAI Numbers 22.5-22 S01, 22.5-24 S01 and 22.5-30 through 22.5-46

   Attachment 1 MFN 09-286 DCD Markups

cc:	AE Cubbage	USNRC (with enclosure)
	JG Head	GEH/Wilmington (with enclosure)
	DH Hinds	GEH/Wilmington (with enclosure)
	eDRFSection	0000-0100-8237 RAI 22.5-22 S01
		0000-0100-8873 RAI 22.5-24 S01
		0000-0100-7966 RAI 22.5-30
		0000-0100-5330 RAIs 22.5-31,32,37,39,40,43,44
		0000-0100-8886 RAI 22.5-33
		0000-0100-7684 RAI 22.5-34 and 38
		0000-0100-6561 RAI 22.5-35 and 36
		0000-0100-6525 RAI 22.5-41
		0000-0101-2477 RAI 22.5-42
		0000-0100-6473 RAI 22.5-45 and 46

Enclosure 1

MFN 09-286

Response to Portion of NRC Request for

Additional Information Letter No. 301

Related to ESBWR Design Certification Application

Regulatory Treatment of Non-Safety Systems (RTNSS)

RAI Numbers 22.5-22 S01, 22.5-24 S01 and 22.5-30 through 22.5-46

NRC RAI 22.5-22 (original)

The following proposed availability controls (ACs) in DCD Revision 4 should state, in the ACLCO, the associated instrumentation functions, and the number of required divisions for each function. The AC Bases should explicitly state the minimum level of system degradation that corresponds to a function being unavailable (usually addressed by Condition A), and the number of divisions used to determine the test interval for each required division (or component) for AC surveillance requirements (ACSRs) (e.g., logic system functional test) that specify a Frequency of 24 months on a staggered test basis.

- *AC 3.3.1 Alternate Rod Insertion (ARI)*
- *AC 3.3.2 Anticipated Transient Without Scram (ATWS) /Standby Liquid Control (SLC) System Actuation*
- *AC 3.3.3 Feedwater Runback (FWRB)*
- *AC 3.3.5 Automatic Depressurization System (ADS) Inhibit*
- *AC 3.5.1 Gravity-Driven Cooling System (GDCS) Deluge Function*

GEH Response

This Request for Additional Information (RAI) consists of four parts. The four parts are summarized and discussed below.

1. The subject Availability Controls (ACs) should state the associated instrumentation functions in the AC Limiting Condition of Operability (ACLCO).

Each of the Bases for the subject ACs (which are also part of the Availability Controls Manual (ACM)) listed in the RAI provides a list of the parameters that will result in actuation of the associated function. However, clarification of the ACLCO for the Automatic Depressurization System (ADS) Inhibit function has been identified.

There are two separate ADS initiation signals; one is performed by the Safety System Logic and Control Engineered Safety Feature (SSLC/ESF) and one is performed by the Diverse Protection System (DPS). Anticipated Transient Without Scram (ATWS) / Standby Liquid Control (SLC) System (ATWS/SLC) logic is used to inhibit ADS initiation from the SSLC/ESF under conditions indicative of an ATWS. DPS logic is used to inhibit the DPS initiation of ADS under conditions indicative of an ATWS. This nonsafety-related DPS ADS inhibit does not affect SSLC/ESF logic. AC 3.3.5 does not clearly address both of these instrumentation systems for the ADS inhibit function. To provide the appropriate clarification, the requirements associated with the ATWS/SLC inhibit of ADS are relocated into AC 3.3.2 while the requirements associated with the DPS inhibit of ADS are relocated into AC 3.3.6, "Diverse Protection System," as described below.

In revising AC 3.3.2 to include the ADS Inhibit Function, the Functions required by ACLCO 3.3.2 are more clearly presented in a new Table 3.3.2-1. In addition, the Reactor Water Clean-Up / Shutdown Cooling (RWCU/SDC) Isolation Function implemented in ATWS/SLC is included as a separate Function in Table 3.3.2-1. The

Bases associated with AC 3.3.2 are revised to include discussions of the ADS inhibit and RWCU/SDC isolation functions.

The requirements associated with the DPS inhibit of ADS are relocated into AC 3.3.6, Table 3.3.6-1 as "Automatic Depressurization System (ADS) Inhibit." The Bases associated with AC 3.3.6 are revised to include discussion of the DPS inhibit of ADS actuation.

AC 3.3.5 is deleted and AC 3.3.6 is renumbered as 3.3.5. The ACM Table of Contents is revised to reflect this renumbering.

These changes clarify the requirements associated with both ADS inhibit signals.

2. The subject ACs should state the number of required divisions for each function in the ACLCO.

The subject ACs require the associated function to be Available. Failure of components related to the subject AC functions would result in entry into Condition A until repairs are effected, or until an evaluation determines that the function is still Available. DCD Chapter 7 provides additional information related to these functions; therefore, no changes are required to include additional design detail in the ACLCO.

The AC 3.3.1 Alternate Rod Insertion (ARI) and the AC 3.3.3 Feedwater Runback (FWRB), functions are actuated by nonsafety-related logic that is processed by the Diverse Protection System (DPS). The DPS is a triple redundant control system. The DPS is not a divisional instrumentation system.

The AC 3.3.2 ATWS/SLC System Actuation function is performed by logic processors in each of the four divisional Reactor Trip and isolation Function (RTIF) cabinets. Although the ATWS/SLC Actuation function is based on a four-division instrumentation system, ACLCO 3.3.2 requires the function to be Available. Failure of an ATWS/SLC function in any of the four divisions would result in entry into Condition A until repairs are effected, or until an evaluation determines that the function is still Available. However, to assure more clarity for the ACLCO required Function, ACSR 3.3.2.2 are revised to reduce complexity of the ACSR description and the AC 3.3.2 Bases are revised to delete misleading information discussing the operability of instrument sensors being addressed in Technical Specification 3.3.1.1. The Bases are also revised to delete discussion of ATWS/SLC being evaluated under the Regulatory Treatment of Non-Safety Systems (RTNSS) evaluations.

As previously discussed, AC 3.3.5, "Automatic Depressurization System (ADS) Inhibit," is deleted. The requirements associated with the ATWS/SLC inhibit of ADS actuation are relocated into AC 3.3.2 and the requirements associated with the DPS inhibit of ADS actuation are relocated into AC 3.3.6, now renumbered as AC 3.3.5.

The AC 3.5.1 Gravity-Driven Cooling System (GDCS) Deluge function is executed in a pair of dedicated nonsafety-related programmable logic controllers (PLCs) and a pair of dedicated safety-related temperature switches. Both PLC outputs and both temperature switch outputs must operate to fire the squib initiator associated with each deluge valve. The GDCS Deluge function logic is non-divisional.

3. The subject AC Bases should explicitly state the minimum level of system degradation that corresponds to a function being unavailable.

The subject ACs require the associated function to be Available. The definition of Availability provided in Availability Controls Manual (ACM) Section 1.1 assures all necessary attendant devices required to perform the specified risk informed function(s) are MFN 08-637 Page 3 of 3 Enclosure 1 also capable of performing their related support function(s). Therefore, in order for a function to be Available, the associated parameter(s) must capable of supporting their related function. The associated Bases describe the platform that processes the actuation logic. The associated sections of DCD Chapter 7 discuss the platform configurations. Failure of components related to the subject AC functions would result in entry into the associated Condition A until repairs are effected, or until an evaluation determines that the function is still Available. Because DCD Chapter 7 provides details of the associated instrumentation configuration, there is no need to repeat this information in the AC Bases. The Bases related to AC 3.3.3 are revised to clarify that the FWRB function specified by AC 3.3.3 is the functions associated with the DPS. The Bases of AC 3.3.5, previously AC 3.3.6, are revised to include references to the applicable sections of DCD Chapter 7 that describe the various functions.

4. The subject AC Bases should explicitly state the number of divisions used to determine the test interval for each required division (or component) for AC Surveillance Requirements (ACSRs) that specify a Frequency of 24 months on a Staggered Test Basis.

The functions specified by AC 3.3.1, AC 3.3.3, and AC 3.5.1 are processed by nonsafety-related instrumentation systems that are non-divisional, as discussed above. Therefore, ACSR 3.3.1.3, ACSR 3.3.3.2, and ACSR 3.5.1.3 are revised to delete reference to divisions. The associated Frequencies are revised to delete "on a STAGGERED TEST BASIS." With this change, the associated Logic System Functional Tests will be performed at a Frequency of 24 months.

The ATWS/SLC Function specified by AC 3.3.2 is performed by a four-division instrumentation system (as described in DCD Subsection 7.8.1.1.1.1); therefore, the "Staggered Test Basis" Frequency is based upon four divisions. DCD Chapter 7 provides details of the associated instrumentation configuration. Because DCD Chapters 7 and 19 are both parts of the same document and are under the same change control mechanisms, there is no need to repeat this information in the AC Bases.

DCD Impact

The DCD is revised as shown on the enclosed marked-up pages. These pages show the changes discussed above, and will be appropriately integrated in the next revision of the DCD.

NRC RAI 22.5-22 S01

Parts 1and 4 of the response to RAI 22.5-22 are acceptable.

1. Regarding Part 2 of the response:

A. Clarify AC 3.3.2 and bases as needed to resolve the following ambiguities:

i. Are four divisions required by ACLCO 3.3.2?

ii. What is meant by the phrase "on each required division" in ACSR 3.3.2.4, LSFT, if the test interval for each division is based on four divisions (24 months on a Staggered Test Basis)?

iii. Does the ACSR 3.3.2.4 apply to all three ATWS/SLC Actuation Functions?

iv. Are the main control room manual switches for ATWS ADS inhibit included as part of Function 3 in Table 3.3.2-1; why does AC 3.3.2 not specify surveillance requirements for them?

B. From Figure 6.3-1 in Rev 5 of DCD Tier 2 Chapter 6, each of the four GDCS trains has a deluge line that branches into three lines, each with a deluge squib valve. From this it appears there are 12 deluge squib valves in the GDCS design. ACLCO 3.5.1 requires just two deluge [squib] valves to be Available. Therefore, it appears that as a minimum, the deluge function can be performed with one GDCS pool (A or D), and just two of the three deluge squib valves associated the pool. Revise the bases to include this point (with corrections if necessary) for clarification and completeness. In addition, address in your response the roles of the maintenance rule, reliability assurance, and the inservice testing programs, as well as ACSRs 3.5.1.1, 3.5.1.2, and 3.5.1.3 for ensuring all 12 deluge squib valves are maintained Available

.C. Explain what ACSR 3.5.1.3 means by "each required Deluge actuation division." Are not all four divisions required?

2. Part 3 of your response stated, "Failure of components related to the subject AC functions would result in entry into the associated Condition A until repairs are effected, or until an evaluation determines that the function is still Available."

Does the underlined part of this statement mean "until an evaluation determines that the function is degraded but still Available while the related component, which was previously thought to be necessary for function Availability, is failed or unavailable?"

If your response alludes to RIS 2005-20, Rev 1, Revision to NRC Inspection Manual Part 9900 Technical Guidance, "Operability Determinations & Functionality Assessments for Resolution of Degraded or Nonconforming Conditions Adverse to Quality or Safety", explain how that guidance applies to RTNSS nonsafety-related systems.

GEH Response

Question:

1.A. Clarify AC 3.3.2 and bases as needed to resolve the following ambiguities:

i. Are four divisions required by ACLCO 3.3.2?

ii. What is meant by the phrase "on each required division" in ACSR 3.3.2.4, LSFT, if the test interval for each division is based on four divisions (24 months on a Staggered Test Basis)?

iii. Does the ACSR 3.3.2.4 apply to all three ATWS/SLC Actuation Functions?

iv. Are the main control room manual switches for ATWS ADS inhibit included as part of Function 3 in Table 3.3.2-1; why does AC 3.3.2 not specify surveillance requirements for them?

Response:

i. Four divisions are not required. GEH will revise the Bases associated with ACLCO 3.3.2 to clarify the ACM requirements Related to the Anticipated Transient Without Scram (ATWS) / Standby Liquid Control (SLC) System Actuation. ACLCO 3.3.2 requires the Functions listed in Table 3.3.2-1 to be operable. As described in the response to NRC RAI 22.5-22 (MFN 08-637, dated August 22, 2008), the ATWS/SLC System Actuation function is performed by logic processors housed in each of the four divisional Reactor Trip and Isolation Function (RTIF) cabinets. The ATWS/SLC logic is configured so that, with one division in bypass, the required Functions can still be performed assuming a failure in one of the remaining three divisions. Therefore, a Function is capable of performing the required actuation with just two divisions.

ii. The phrase is inappropriate. GEH will revise ACSR 3.3.2.4 to delete the phrase "for each required SLC actuation function of the ATWS/SLC automatic actuation division."

iii. ACSR 3.3.2.4 applies to all three required Functions.

iv. Main control room manual switches for ATWS ADS inhibit are not included as part of Function 3 in Table 3.3.2-1. DCD Tier 2 Section 19A.2.1 states that the automatic actuation of the DPS ADS Inhibit function is in the scope for RTNSS because it is the diverse backup for the safety-related automatic ADS Inhibit function. The ESBWR function that meets the requirements for ATWS is the automatic actuation function. Therefore, the manual actuation switches are not considered in the RTNSS evaluation, or in the scope of the ACM.

Question:

1.B. From Figure 6.3-1 in Rev 5 of DCD Tier 2 Chapter 6, each of the four GDCS trains has a deluge line that branches into three lines, each with a deluge squib valve. From this it appears there are 12 deluge squib valves in the GDCS design. ACLCO 3.5.1 requires just two deluge [squib] valves to be Available. Therefore, it appears that as a minimum, the deluge function can be performed with one GDCS pool (A or D), and just two of the three deluge squib valves associated the pool. Revise the bases to include this point (with corrections if necessary) for clarification and completeness. In addition, address in your response the roles of the maintenance rule, reliability assurance, and the inservice testing programs, as well as ACSRs 3.5.1.1, 3.5.1.2, and 3.5.1.3 for ensuring all 12 deluge squib valves are maintained Available

Response:

There are 12 deluge squib valves in the GDCS design. The deluge function is performed with two GDCS pools and any combination of deluge squib valves.

GEH will revise the Bases associated with ACLCO 3.5.1 to require that 6 of the 12 deluge squib valves be available.

The specific application of the Maintenance Rule is addressed in DCD Section 19A.8. All of the components listed in Table 19A-2, which includes the deluge valves, will be included under the Maintenance Rule. The application of reliability assurance requirements is discussed in DCD Section 17.4. The IST requirements for the deluge valves are provided in DCD Table 3.9-8.

Question:

1.C. Explain what ACSR 3.5.1.3 means by "each required Deluge actuation division." Are not all four divisions required?

Response:

The phrase “each required Deluge actuation division” was deleted as part of the GEH response to RAI 2.5-22 (MFN 08-637, dated August 22, 2008).

Question:

2. Part 3 of your response stated, “Failure of components related to the subject AC functions would result in entry into the associated Condition A until repairs are effected, or until an evaluation determines that the function is still Available.”

Does the underlined part of this statement mean “until an evaluation determines that the function is degraded but still Available while the related component, which was previously thought to be necessary for function Availability, is failed or unavailable?”

If your response alludes to RIS 2005-20, Rev 1, Revision to NRC Inspection Manual Part 9900 Technical Guidance, “Operability Determinations & Functionality Assessments for Resolution of Degraded or Nonconforming Conditions Adverse to Quality or Safety”, explain how that guidance applies to RTNSS nonsafety-related systems.

Response:

The response was not alluding to RIS 2005-20, Rev. 1. The ESBWR DCD does not specifically address the applicability of the NRC Inspection Manual guidance discussed in RIS 2005-20, Revision 1 (or related historical predecessor Generic Letter 91-18, Revision 1). It is recognized that this operational guidance includes scope (Section 2.2) that addresses certain non-Technical Specification structures, systems, and components (SSCs), however, there was no intent to specifically address the details of that guidance or its future application in COL operational programs.

The original RAI response statement was only intended to recognize that a degraded condition (i.e., "failure of components") inherently results in only two "states" -- either available (based on "an evaluation"), or unavailable resulting in entry into the associated Condition. The response is not intended to address the timing of evaluation(s) that support the determination of "available." Degraded conditions could have previous evaluation(s) that support no impact on availability, or they could have evaluations subsequent to Condition entry.

DCD Impact

DCD Tier 2, ACM Sections 3.3.2 and 3.5.1 will be revised in DCD Revision 6 as noted in the attached markup.

NRC RAI 22.5-24(original)

Question Summary
Standby Diesel Generator availability control

Full Text

Regarding DCD Revision 4

- AC 3.8.1 Standby Diesel Generators – Operating, and
- AC 3.8.2 Standby Diesel Generators - Shutdown

a. *Why does ACLCO 3.8.1 require just one standby diesel generator, when the focused PRA assumes two, and two are required by ACLCO 3.8.2?*

b. *For a total loss of standby diesel generator availability, why does AC 3.8.1 allow 14 days to restore function, instead of 24 hours as specified in AC 3.8.2?*

GEH Response

The Availability Controls Manual reflects the fact that AC power is more risk important during shutdown modes, especially when the reactor coolant system is open, than during operating modes. The focused PRA, as described in DCD Tier 2 Section 19A.4.1, does not credit any Standby Diesel Generators to meet the CDF or LRF goals.

From the design basis perspective, no Standby Diesel Generator-derived AC power is required for 72 hours after an abnormal event. From the probabilistic perspective, one Standby Diesel Generator should be operable during Modes 1, 2, 3, and 4 to support FAPCS and post-accident monitoring. It is appropriate to maintain two Standby Diesel Generators operable during Modes 5 and 6 when passive core heat removal is not available (ICS) and active core heat removal is being performed by the RWCU/SDC system. The risk significance is elevated during shutdown modes because the containment is open, thus any core damage event contributes directly to the large release frequency.

The short-term availability controls for the Standby Diesel Generators, which are specified as Completion Times, are acceptable to ensure that their availability is recognized and treated consistent with their importance in the ESBWR PRA. The Completion Time for ACLCO 3.8.2 was reduced from 14 days to 24 hours to help ensure that the Standby Diesel Generators are maintained available during refueling outages.

DCD/NEDO-33201 Impact

No DCD changes will be made in response to this RAI.
No changes to the NEDO-33201 will be made in response to this RAI.

NRC RAI 22.5-24 S01

(1) Technical specification (TS) limiting conditions for operation (LCOs), for systems satisfying 10 CFR 50.36(c)(2)(ii) criteria, are written to satisfy the single failure criterion. Actions are written to limit the duration of unit operation for loss of redundancy and in most cases require unit shutdown for loss of function. Availability control (AC) LCOs (ACLCOs) for non-TS systems satisfying RTNSS criteria, may be written to satisfy the single failure criterion, but must be written to be consistent with the availability and reliability assumptions of the PRA. This is especially important given the lack of any AC Actions requiring unit shutdown. Therefore, ACLCO's should require all trains and components of a RTNSS system (including necessary support systems) to be Available in the plant operational conditions (Modes) during which the PRA assumes the system is Available; a train or component may be omitted from the ACLCO only if the PRA explicitly assumes the train or component is out-of-service. Therefore, in Modes 1, 2, 3, and 4, the ACLCOs should be revised to require both Standby DGs, and all 12 GDCS deluge flow paths to be Available.

(2) AC Required Action completion times should be consistent with those provided for corresponding systems in standard technical specifications (STS); 3 or 7 days for loss of redundancy and immediate entry into ACLCO 3.0.3 for loss of function (loss of risk mitigation). The STS completion times allow appropriate time to repair most problems with inoperable systems or components when the risk of operation during the specified time is considered comparable to the risk associated with a unit shutdown. Since a unit shutdown is not required by any AC action requirement, revise the AC completion times to be based only on reasonable repair-time considerations, as modeled in the STS.

(3) Should a RTNSS system remain unavailable beyond its specified repair completion time, then the risk of the resulting unit configuration must be assessed and managed in accordance with the maintenance rule program. ACLCO 3.0.3 only requires initiating action to restore the system to Available status and entering the circumstances of the unavailability into the corrective action program. ACLCO 3.0.3 should also require assessing and managing the risk of the resulting unit configuration in accordance with the maintenance rule program; revise ACLCO 3.0.3 with this requirement. In addition, in the AC Bases for ACLCO 3.0.3, refer to RG 1.182 and NUMARC 93-01 Rev 3, Section 11.3.2.8 regarding emergent conditions.

GEH Response

(1) As discussed in DCD Section 19A.4.2, FAPCS meets RTNSS Criterion C, which addresses uncertainty in passive system performance. FAPCS provides active backup functions for coolant injection and suppression pool heat removal. The at-power focused PRA sensitivity study for RTNSS criterion C assumes that one FAPCS train is capable of backing up these passive functions. Therefore, one FAPCS train and its supporting functions, including one Standby DG, are assumed to be available for normal operations. During shutdown conditions, some passive functions are not employed (for

example, PCCS in Mode 6) and there is more of a reliance on active systems to perform plant cool-down functions. Both Standby DGs are required in the ACM during Modes 5 and 6.

The Level 2 PRA success criterion for GDCS Deluge valves assumes that only 6 valves must function.

(2) The PRA evaluates the functions satisfying the RTNSS criteria to determine their risk significance. Those functions with high risk significance are included in the TS. Those functions with low risk significance are included in the ACM. CDF and LRF are relatively insensitive to the availability of these low risk significant systems. As explained in DCD Section 19A, that is specifically why they are in the ACM rather than TS. To apply the same requirements as TS, then, would be inappropriate. Neither a unit shutdown requirement nor revisions to the completion time are necessary to provide reasonable assurance that the availability of low risk significant SSCs will be consistent with the availability assumed in the PRA.

(3) GEH will revise ACLCO 3.0.3, to include a requirement for assessing and managing risk in accordance with the maintenance rule program. This will provide a confirmation that there are no significant increases in risk.

DCD Impact

DCD Tier 2, ACM Section 3.0.3 will be revised as noted in the attached markup.

NRC RAI 22.5-30

For the GDCS deluge function, explain why neither GTS Section 3.3.5 nor generic ACM Section 3.3 requires performing a Channel Check and a Channel Calibration on each drywell atmosphere and lower drywell basemat thermocouple; or add these surveillances to the GTS or the generic ACM.

GEH Response

GEH will revise generic ACM to add a Channel Check and a Channel Calibration for each drywell atmosphere, and lower drywell basemat thermocouple in AC 3.5.1, as ACSR 3.5.1.1 and ACSR 3.5.1.3, respectively. Existing ACSRs will be renumbered.

The GDCS deluge function is nonsafety-related, and RTNSS low regulatory oversight, so Technical Specifications do not apply.

DCD Impact

DCD Tier 2, Section 3.5.1 will be revised in Revision 6 as noted in the attached markup.

NRC RAI 22.5-31

The Frequency of ACSR 3.7.5.2 (Perform [Reactor Building HVAC Purge Exhaust] filtration unit testing in accordance with Section 9.4.6.4) is stated as "In accordance with Section 9.4.6.4." DCD Section 9.4.6.4 states "The Reactor Building HVAC Purge Exhaust Filter components are periodically tested in accordance with Regulatory Guide 1.140, Design, Inspection, and Testing Criteria for Air Filtration and Adsorption Units of Normal Atmosphere Cleanup Systems in Light-Water-Cooled Nuclear Power Plants."

Section C.6, "In-Place Testing Criteria," of RG 1.140, Rev 2, specifies

- *a 24 month Frequency for in-place aerosol leak testing for HEPA filters upstream from the carbon adsorbers in accordance with Section 10 of ASME N510-1989, in addition to other condition-based frequencies (6.2)*
- *a 24 month Frequency for in-place leak testing for adsorbers in accordance with Section 11 of ASME N510-1989, in addition to other condition-based frequencies (6.3)*

If Reactor Building HVAC Purge Exhaust Filtration units are needed to satisfy GDC 19 dose limits, explain why RG 1.52 does not apply to their testing? If RG 1.52 applies, then the associated NRC-endorsed Frequencies should be adopted.

The Reactor Building HVAC Purge Exhaust Filtration units, according to AC B 3.7.5 (page 19ACM 3.7-13), are relied upon to provide "exhaust filtering efficiency to ensure that theoretical control room doses are not exceeded for certain beyond design basis LOCAs"? Where is this beyond-design basis LOCA theoretical control room radiological consequence mitigation discussed in the DCD?

GEH Response

Regulatory Guide (RG) 1.52 does not apply to testing these nonsafety-related units because they perform a beyond-design basis function, which is not required to satisfy GDC 19 dose limits.

The function identified in the RTNSS process for the Reactor Building HVAC Accident Exhaust Filter Units is to capture additional radiation source term due to the postulated leakage of contaminated fluid during restoration of long-term cooling using the alternative flow path through the RWCU/SDC heat exchangers. The evaluation in the RTNSS process of potential adverse interactions in DCD Tier 2 Subsection 19A.6.2.2 determined that the filtration units should have regulatory oversight to add assurance of their filtration capability in this scenario. This oversight is provided in the form of testing, which is described in ACSR 3.7.5.2. Additional detail is found in the GEH response to RAI 9.4-53 (MFN 08-791).

DCD Impact

No DCD changes will be made in response to this RAI.

NRC RAI 22.5-32

In the ACM, a failure to restore a specified RTNSS system or function to Available status within the specified completion time does not result in a requirement to shut the unit down. Therefore, it is unclear how the specified completion times will ensure that the availability of the system or function "is consistent with the functional availability in the ESBWR PRA" as asserted in the bases for each AC. That is, when RTNSS functions remain unavailable beyond the specified completion times, it is reasonable to establish unavailability and risk limits that, if exceeded, would lead to a unit shutdown. The applicant is requested to either (1) explain why the generic TS and the ACM should not contain requirements to be in Mode 5, or to otherwise exit the affected TS's or AC's applicability, for the condition of exceeding an unavailability or risk limit; or (2) establish such action requirements (for example, in ACLCO 3.0.3).

GEH Response

When RTNSS functions remain unavailable beyond the specified completion times, it is not reasonable to require transitioning to Mode 5 or to otherwise exit the affected AC's applicability because the unavailability of RTNSS systems covered under the ACM is of low risk significance. As discussed in the GEH response to RAI 22.5-24 Supplement 1, the functional unavailability of components identified in the RTNSS process is relatively insensitive to core damage frequency and large release frequency.

DCD Impact

No DCD changes will be made in response to this RAI.

NRC RAI 22.5-33

Each Availability Control (AC) bases contains statements similar to the following: "The short-term availability controls for this function, which are specified as Completion Times, are acceptable to ensure that the availability of this function is consistent with the functional availability in the ESBWR PRA. The surveillance requirements also provide an adequate level of support to ensure that component performance is consistent with the functional reliability in the ESBWR PRA." For each system covered by an AC, including all of its support systems which may or may not be covered by an explicit AC, explain how the proposed required action completion times and surveillance requirements are derived from the functional availability and functional reliability, respectively, as given in the ESBWR PRA, for the functions the PRA assumes the system performs. Along with the explanation, justify the 24-hour Frequency for the Channel Check (ACSR 3.3.5.1) and the 24-month Frequency for the Channel Functional Test (ACSR 3.3.5.2) for the 7 DPS functions in Table 3.3.5-1, or revise the Frequencies to be consistent with the STS for these instrumentation surveillances.

GEH Response

The Bases statement about completion times and surveillance requirements being consistent with the PRA assumptions reflects the fact that the CDF and LRF are relatively insensitive to the unavailability of components identified in the RTNSS process. The statement is not intended to imply that there is some direct relational calculation used to derive availability and reliability requirements. The nonsafety-related systems meeting the RTNSS criteria that are Low Regulatory Oversight are included in the Availability Controls Manual. They have low risk significance, and thus, basing allowable outage times on risk significance would result in inordinately long allowable outage times. As for support systems, the availability of support systems for a given ACM function is already required by the definition of availability under AC 1.1.

GEH will revise the Frequency for ACSR 3.3.5.1, Channel Check, from 24 hours to 12 hours and the Frequency for ACSR 3.3.5.2, Channel Functional Test, from 24 months to 92 days.

DCD Impact

DCD Tier 2, ACM Section 3.3 will be revised in Revision 6 as noted in the attached markup.

NRC RAI 22.5-34

The adjective "required" should only be used if necessary to make an AC provision clear. For example, there is no need to use required in Condition A of AC 3.3.2 and AC 3.3.5, because only the three actuation functions given in Table 3.3.2-1 and the seven actuation functions given in Table 3.3.5-1 are required to be Available by ACLCO 3.3.2 and ACLCO 3.3.5, respectively. Condition A of AC 3.7.1 also uses "required" unnecessarily.

GEH Response

GEH will revise the statements in Condition A of AC 3.3.2 and AC 3.3.5 to delete the term "required." However, the term is appropriate as written for AC 3.7.1 because, as indicated in DCD Subsection 9.5.1.4, there are redundant components not included in the ACLCO.

DCD Impact

DCD Tier 2, Sections ACLCO 3.3.2 and ACLCO 3.3.5 will be revised in Revision 6 as noted in the attached markup.

NRC RAI 22.5-35

DCD Section 19A.8.4.3, "Diverse Protection System," does not list the ADS inhibit function, which is specified in AC 3.3.5, Table 3.3.5-1, Function 7. Revise the DCD to include the ADS inhibit function.

GEH Response

GEH will revise DCD Tier 2 Section 19A.8.4.3 to include the appropriate ADS inhibit function.

DCD Impact

DCD Tier # 2, Section 19A.8.4.3 will be revised in Revision 6 as noted in the attached markup.

NRC RAI 22.5-36

DCD Section 19A.8.4.10, "Long-Term Containment Integrity" states that long-term containment pressure control is accomplished by a combination of passive autocatalytic recombiners (PARs) in the containment airspaces and PCCS Vent Fans, which are operated to redistribute the non-condensable gases from the wetwell to the drywell so that overall containment pressure is reduced. Explain how the underlined text reduces pressure "overall"?

GEH Response

Redistributing the non-condensable gases from the wetwell air space to the drywell reduces the pressure in the wetwell airspace. The PARs recombine the Hydrogen and Oxygen that accumulate in the wetwell air space and drywell. The combination of the PARs and the PCCS Vent Fans maintains acceptable containment pressure. GEH will revise DCD Tier 2 Section 19A.8.4.10 to delete the term "overall" and clarify that the PCCS Vent Fans reduce the pressure in the wetwell airspace that is attributable to long-term accumulation of non-condensable gases.

DCD Impact

DCD Tier # 2, Section 19A.8.4.10 will be revised in Revision 6 as noted in the attached markup.

NRC RAI 22.5-37

Confirm that instrumentation settings for Availability Control Manual Section 3.3 instrumentation functions are controlled by GTS 5.5.11, "Setpoint Control Program (SCP)."

GEH Response

The instrumentation settings for the ACM are not controlled by GTS 5.5.11. As discussed in the GEH response to RAI 7.1-86 S01 (MFN 08-119 Supplement 1) SCP Methodology only applies to safety-related and TS instrumentation settings. The calibration of nonsafety-related instrumentation is handled by plant procedures, which are controlled as described in DCD Tier 2 Section 13.5.

DCD Impact

No DCD changes will be made in response to this RAI.

NRC RAI 22.5-38

AC 3.3.5 Action A would permit operation for 30 days with a complete loss of one or more of the following DPS functions:

- *Reactor scram – protection logic*
- *MSIV closure – initiation logic*
- *SRV actuation – initiation logic*
- *Fine Motor CRD Run-in actuation – initiation logic*
- *ICS actuation – initiation logic*
- *SLCS actuation (for LOCA) (not described in bases)*
- *ADS [actuation initiation by DPS] Inhibit*

The bases descriptions of these DPS functions are too brief, compared to the discussions in the bases for AC 3.3.2 and AC 3.3.3. Referencing the DCD sections that discuss these functions is acceptable; and the staff recommends adding such references to all other AC bases. Please revise the bases for AC 3.3.5 to add a discussion, including a DCD reference, of the SLCS actuation on a LOCA signal DPS function.

GEH Response

GEH will add DCD section references to the applicable AC Bases for the various DPS functions. A discussion, including a DCD reference, of the SLCS actuation on a LOCA signal DPS function has been added to the Bases for ACM 3.3.5.

DCD Impact

DCD Tier 2, Section ACM B 3.3, will be revised in Revision 6 as noted in the attached markup.

NRC RAI 22.5-39

Explain why ACSR 3.5.1.4 contains the note, "Squib actuation may be excluded," or remove the note. Describe how the deluge line flow paths are verified to not be obstructed.

GEH Response

The note was removed as a result of the GEH response to RAI 16.2-96 and RAI 16.2-96, S01 [MFN 07-211, Supplement 1 dated July 23, 2007]. DCD Tier 2 Table 6.3-3 denotes that inservice testing for the deluge lines is performed by flushing the lines from a dedicated connection.

DCD Impact

No DCD changes will be made in response to this RAI.

NRC RAI 22.5-40

Figure 8.3-3, "Ancillary Power Functional Figure" shows that the Ancillary diesel buses power an RPV Make-up Pump and MCR Ancillary Air Conditioning Units. Where in the DCD are these components discussed? Explain why they are not included in the ACM?

GEH Response

The main control room air conditioning units are discussed in the GEH response to RAI 9.4-31, S01 [Letter MFN 08-863, dated November 5, 2008] including the main control room air conditioning unit ACM requirements and the location of main control room air conditioning unit discussions in the DCD.

The RPV Makeup Pump is discussed in DCD Section 9.1.3. This pump does not meet RTNSS criteria. See also the GEH response to RAI 22.5-27 [Letter MFN 08-727, dated October 21, 2008] for why this pump is not included in the ACM.

DCD Impact

No DCD changes will be made in response to this RAI.

NRC RAI 22.5-41

- *AC 3.7.2 has no surveillance requirement for FAPCS pumps.*
- *Explain why DCD Tier 1, Table 2.6.2-1, which lists mechanical components of the Fuel and Auxiliary Pools Cooling System, does not list the FAPCS pumps.*
- *Editorial – page 19ACM 3.7-5 is missing the section heading.*

GEH Response

The FAPCS pumps, as well as other individual components, are inherent parts of the trains. As indicated in the Bases for 3.7.2, the normal FAPCS function is spent fuel cooling. At least one of the FAPCS pumps should be running in the fuel pool cooling mode during normal operation and, therefore, be readily identifiable as operational. The specific surveillance requirement in ACSR 3.7.2.1 is appropriate, however, for other components that may not be readily identifiable during normal operation as being available to support the other flow paths discussed in the Bases.

GEH will revise Table 2.6.2-1 to include the FAPCS pumps in the list of mechanical components.

The missing section header on Page 19ACM 3.7-5 was identified internally and corrected for DCD Revision 6. Page numbers may change, but the corrected page is enclosed.

DCD Impact

DCD Tier #2, Page 19ACM 3.7-5 will be revised in Revision 6 as noted in the attached markup.

DCD Tier #1, Table 2.6.2-1 and Figure 2.6.2-1 will be revised in Revision 6 as noted in the attached markup.

NRC RAI 22.5-42

The staff requests that GEH revise AC 3.7.1 to provide a surveillance requirement for the electric fire pump.

GEH Response

An AC surveillance requirement for the motor-driven fire pump is not necessary because the pump is already tested in accordance with NFPA 20, “Standard for the Installation of Stationary Pumps for Fire Protection” as discussed in DCD Tier 2 Table 9.5-1.

DCD Impact

No impact on the DCD.

NRC RAI 22.5-43

The staff requests that GEH revise AC 3.8.3 bases to state the required fuel volume to meet ACSR 3.8.3.1. Where is this stated in the DCD?

GEH Response

The specific volume requirements will be established as part of detailed design. The design requirements for fuel volume are discussed in DCD Tier 2 Section 9.5.4.1.

DCD Impact

No DCD changes will be made in response to this RAI.

NRC RAI 22.5-44

Most support systems for RTNSS systems are included in the ACM only through the definition of Availability. The staff requests that GEH add an AC surveillance requirement to each AC to verify Availability of all necessary support systems for the ACLCO-required system, as appropriate, and list the necessary support systems in the ACSR or the bases.

GEH Response

The treatment of support systems for ACLCO-required systems is described in DCD Tier 2 Section 19A.8.1, and further clarified in the GEH response to RAI 22.5-18 (MFN 07-455, Supplement 1). If a support system (whether or not it is included in the ACM) becomes unavailable, the licensee evaluates availability of the supported systems and takes appropriate actions. Adding surveillance requirements and listing all support systems in the Bases is not necessary. These support systems are frequently or continuously run during normal operations, so an additional surveillance requirement would not be beneficial or appropriate. Further, monitoring of support systems is required under the Maintenance Rule.

DCD Impact

No DCD changes will be made in response to this RAI.

NRC RAI 22.5-45

The following surveillances for standby diesel generator should be added under Availability Control Surveillance requirements (ACSR):

1) *Verify that each standby diesel generator starts and operates at rated load for ≥ 24 hours. This test may utilize diesel engine prelube prior to starting and warm-up period prior to loading. Verify this test is done during every refueling outage.*
2) *Verify the fuel oil transfer system operates to [automatically] transfer fuel oil from storage tank[s] to the day tank [and engine mounted tank]. Verify this test is done every 92 days.*
3) *Verify that standby diesel generator starts and achieves rated speed and voltage upon receipt of an under-voltage signal and sequences its designed loads while maintaining voltage and frequency within limits. Verify this test is done during every refueling outage.*

GEH Response

GEH will revise ACLCO 3.8.1 and ACLCO 3.8.2 to include the requested Availability Control Surveillance Requirements and the corresponding Bases.

DCD Impact

DCD Tier # 2, ACM Section ACLCO 3.8.1 and ACLCO 3.8.2, and the corresponding Bases, will be revised in Revision 6 as noted in the attached markup.

NRC RAI 22.5-46

The following surveillances for ancillary diesel generator should be added under Availability Control Surveillance requirements (ACSR):

1) *Verify that each ancillary diesel generator starts and operates at rated load for ≥ 24 hours. This test may utilize diesel engine prelube prior to starting and warm-up period prior to loading. Verify this test is done during every refueling outage.*
2) *Verify the fuel oil transfer system operates to [automatically] transfer fuel oil from storage tank[s] to the day tank [and engine mounted tank]. Verify this test is done every 92 days.*

GEH Response

GEH will revise ACLCO 3.8.3 to include the requested Availability Control Surveillance Requirements and the corresponding Bases.

DCD Impact

DCD Tier # 2, ACM Section ALCO 3.8.3 and the corresponding Bases will be revised in Revision 6 as noted in the attached markup.

ATTACHMENT 1

RAI 22.5-22 S01

19ACSR B 3.3.2.4
19AC B 3.3.2
ACLCO 3.5.1
19AC B 3.5.1

RAI 22.5-24 S01

19ACM Section 3.0.3

RAI 22.5-30

Tier 2 Section 3.5.1

RAI 22.5-33

19ACM 3.3

RAI 22.5-34

19ACLO 3.3.2 and ACLO 3.3.5

RAI 22.5-35

19A8.4.3

RAI 22.5-36

19A8.4.10

RAI 22.5-38

Section 19ACM B3.3

RAI 22.5-41

DCD Tier 1Table 2.6.2-1
DCD Tier 1 Figure 2.6.2-1
DCD Tier 2 page 3.7-5

RAI 22.5-45

ACLO 3.8.1 and Bases
ACLO 3.8.1 and Bases

RAI 22.5-46

ACSR 19AC 3.8.3 and Bases

Table 2.6.2-1

FAPCS Mechanical Equipment

Equipment Name (Description)	Equipment Identifier See Figure 2.6.2-1	ASME Code Section III	Seismic Cat. I	RCPB Component	Containment Isolation Valve.	Remotely Operated	Loss of Motive Power Position
External Water Makeup Check Valve to IC/PCCS Pool	V-28	Yes	Yes	No	No	N/A	N/A
LPCI Testable Check Valve	V-29	Yes	Yes	No	No	N/A	N/A
LPCI Testable Check Valve	V-30	Yes	Yes	No	No	N/A	N/A
Piping required emergency refill of SFP and IC/PCCS Pool	-	Yes	Yes	No	N/A	N/A	N/A
Piping associated with containment penetrations	-	Yes	Yes	No	N/A	N/A	N/A
Piping to interconnect GDCS pools	-	Yes	Yes	No	N/A	N/A	N/A
Piping associated with low pressure injection interface with RWCU/SDC System	-	Yes	Yes	No	N/A	N/A	N/A
FAPCS Pump	P-1	Yes	No	No	N/A	Yes	Off
FAPCS Pump	P-2	Yes	No	No	N/A	Yes	Off

Table 2.6.2-1

FAPCS Mechanical Equipment

Equipment Name (Description)	Equipment Identifier See Figure 2.6.2-1	ASME Code Section III	Seismic Cat. I	RCPB Component	Containment Isolation Valve.	Remotely Operated	Loss of Motive Power Position
FACPS Heat Exchanger	HX-1	Yes	No	No	N/A	N/A	N/A
FAPCS Heat Exchanger	HX-2	Yes	No	No	N/A	N/A	N/A

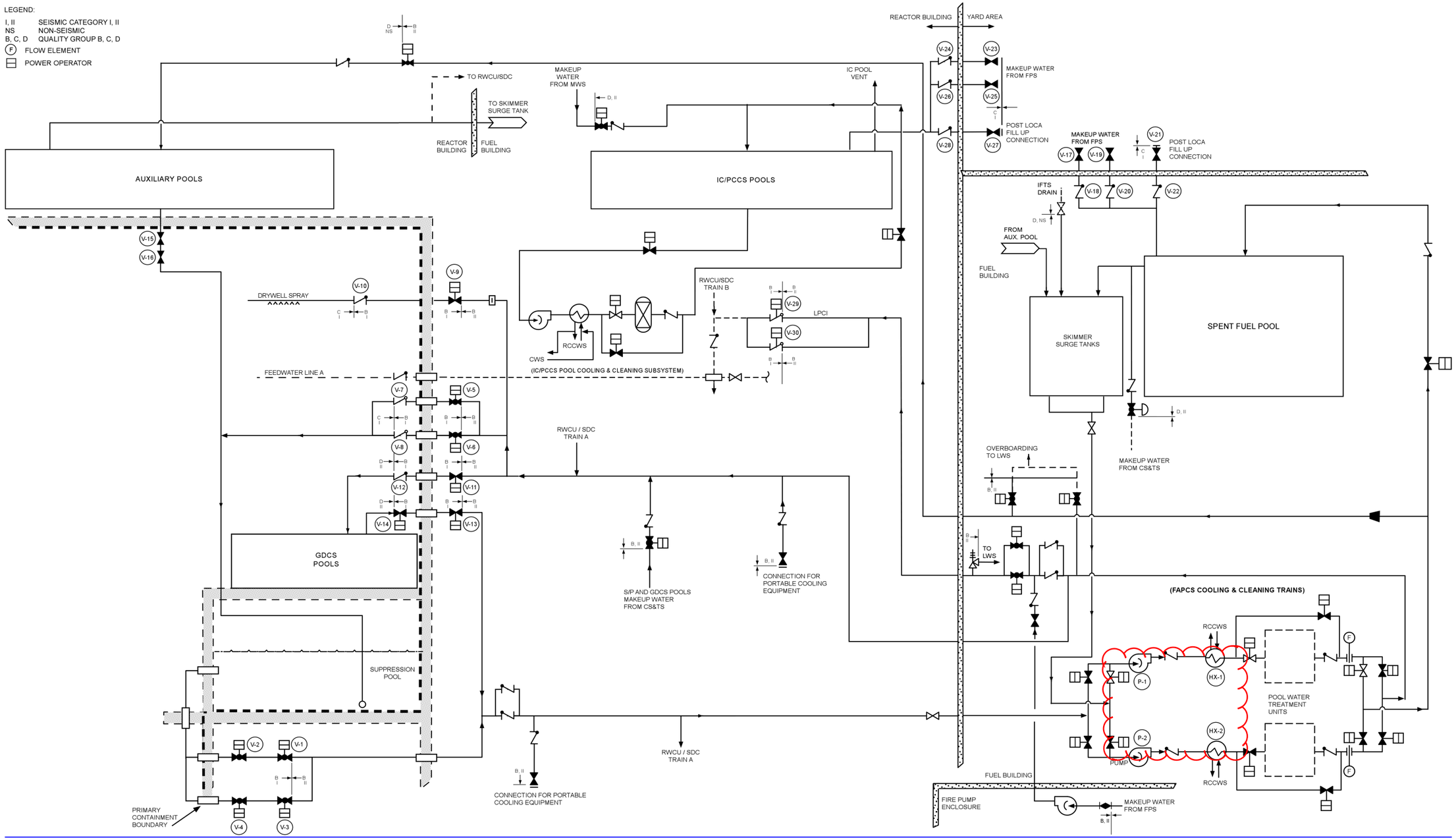
LEGEND:
I, II SEISMIC CATEGORY I, II
NS NON-SEISMIC
B, C, D QUALITY GROUP B, C, D
F FLOW ELEMENT
POWER OPERATOR
TO RWCU/SDC
TO SKIMMER SURGE TANK
REACTOR BUILDING
FUEL BUILDING
MAKEUP WATER FROM MWS
IC POOL VENT
AUXILIARY POOLS
IC/PCCS POOLS
REACTOR BUILDING
YARD AREA
MAKEUP WATER FROM FPS
POST LOCA FILL UP CONNECTION
MAKEUP WATER FROM FPS
POST LOCA FILL UP CONNECTION
IFTS DRAIN
FROM AUX. POOL
FUEL BUILDING
SKIMMER SURGE TANKS
SPENT FUEL POOL
DRYWELL SPRAY
RWCU/SDC TRAIN B
LPCI
RCCWS
CWS
(IC/PCCS POOL COOLING & CLEANING SUBSYSTEM)
FEEDWATER LINE A
RWCU / SDC TRAIN A
OVERBOARDING TO LWS
MAKEUP WATER FROM CS&TS
TO LWS
GDCS POOLS
S/P AND GDCS POOLS MAKEUP WATER FROM CS&TS
CONNECTION FOR PORTABLE COOLING EQUIPMENT
(FAPCS COOLING & CLEANING TRAINS)
RCCWS
HX-1
HX-2
P-1
P-2
PUMP
POOL WATER TREATMENT UNITS
SUPPRESSION POOL
RWCU / SDC TRAIN A
CONNECTION FOR PORTABLE COOLING EQUIPMENT
FUEL BUILDING
FIRE PUMP ENCLOSURE
MAKEUP WATER FROM FPS
PRIMARY CONTAINMENT BOUNDARY
V-1
V-2
V-3
V-4
V-5
V-6
V-7
V-8
V-9
V-10
V-11
V-12
V-13
V-14
V-15
V-16
V-17
V-18
V-19
V-20
V-21
V-22
V-23
V-24
V-25
V-26
V-27
V-28
V-29
V-30

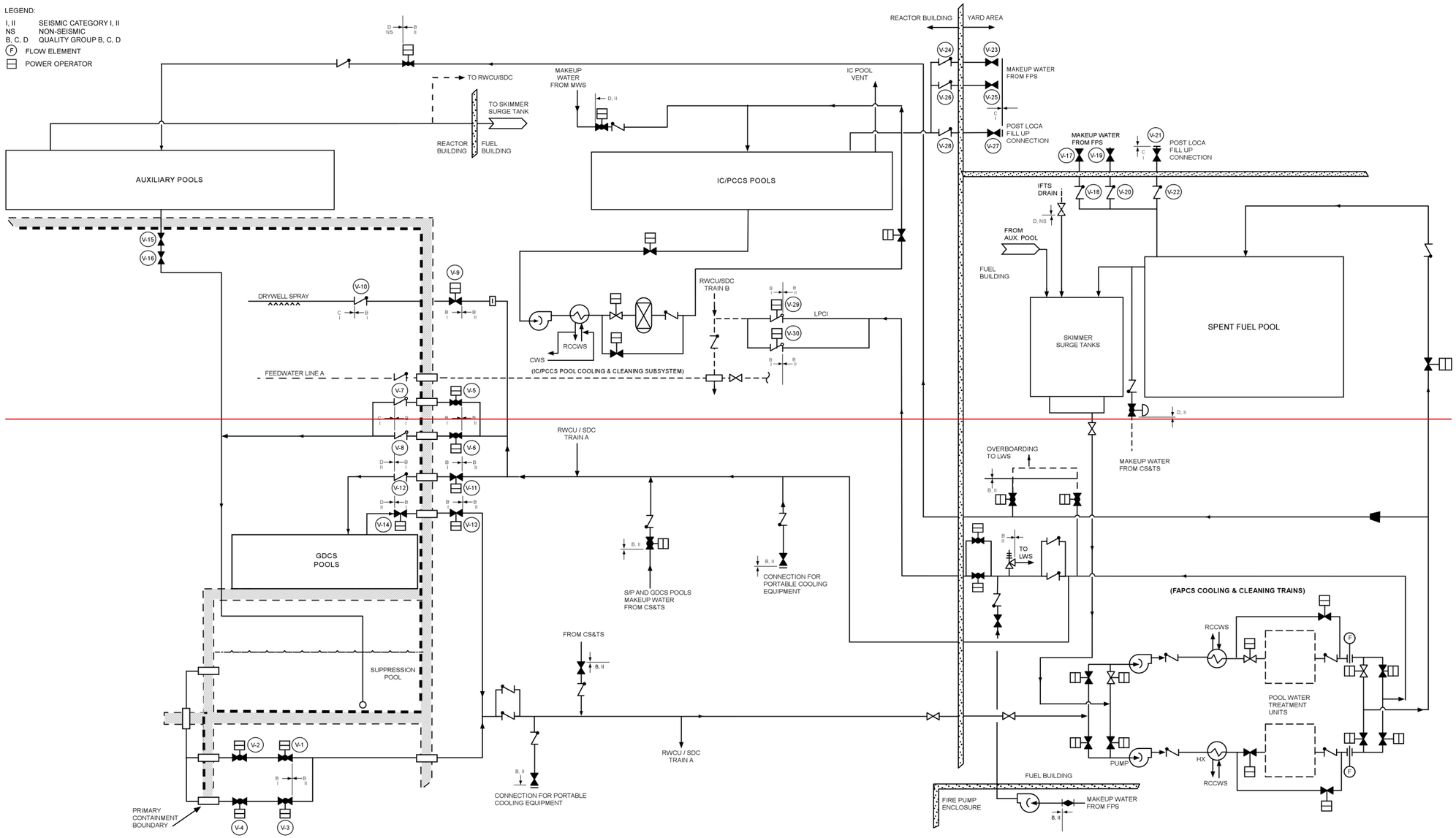

Figure 2.6.2-1. Fuel and Auxiliary Pools Cooling ~~Cleanup~~ System

19A.8.4.1 Nonsafety-Related ATWS Actuation Logic

ATWS actuation logic provides backup reactor shutdown methods that are diverse from the safety-related reactor protection system. Alternate Rod Insertion, Feedwater Runback, and ADS Inhibit use DPS to perform their actuation functions. These functions are RTNSS Criterion A relative to the ATWS Rule, 10 CFR 50.62. They do not have a high risk significance due to the redundancy and diversity of the reactor protection system. The proposed level of regulatory oversight for these functions should be in the Availability Controls Manual.

19A.8.4.2 FPS Pool Cooling Makeup

The diesel-driven and motor-driven FPS pumps, and associated tanks, piping and valves, are RTNSS Criterion B. The pumps and the FPS piping and valves are classified as nonsafety-related but are designed so that the necessary portions of the system remain available following a seismic event to keep equipment required for safe shutdown free from fire damage during a safe shutdown earthquake. In conjunction with the pumps, FPS makeup includes the water supply, the suction pipe from the water supply to the pump, one of the supply pipes from the FPE to the Reactor Building and Fuel Building, and the connections to the FAPCS. Loss of this function does not challenge the CDF or LRF goals. Therefore, the proposed level of regulatory oversight for this function is in the Availability Controls Manual.

19A.8.4.3 Diverse Protection System

DPS provides diverse actuation functions that enhance the plant's ability to mitigate dominant accident sequences involving the common cause failure of actuation logic or controls. The following functions of DPS are significant with respect to the focused PRA sensitivity study to meet the NRC safety goal guidelines: ADS actuation, GDCS actuation, RWCU/SDC valve isolation, and IC/PCCS Pool Connection valves actuation. The risk significance is high for the special case of the focused PRA, such that the proposed level of regulatory oversight for the portions of DPS that provide these functions are contained in Technical Specifications.

DPS provides backup shutdown methods for ATWS mitigation, as described in Subsection 19A.8.4.1.

In addition, DPS provides the following backup functions that are modeled in the PRA:

- Scram
- MSIV Closure
- SRV Actuation
- FMCRD Actuation
- ICS Actuation
- SLC Actuation for LOCA
- ADS Inhibit Function

These functions do not have a high risk significance, so their proposed level of regulatory oversight is in the Availability Controls Manual.

are supplied for these support systems. In addition, performance monitoring of RTNSS components is required by the Maintenance Rule.

19A.8.4.10 Long-Term Containment Integrity

Long-term containment pressure control is accomplished by a combination of passive auto-catalytic recombiners (PARs) in the containment airspaces and PCCS Vent Fans, which are operated to redistribute the non-condensable gases from the wetwell to the drywell so that ~~overall~~ pressure in the wetwell airspace ~~containment pressure~~attributable to long-term accumulation of noncondensable gases is reduced.

PARs are independently mounted components which are capable of recombining a stochiometric mix of hydrogen and oxygen into water vapor. This recombination is facilitated through the use of a selective metal catalyst, and requires no external power or controls. A Passive Containment Cooling vent fan is teed off of each PCCS vent line and exhausts to the GDCS pool. The fan aids in the long-term removal of non-condensable gas from the PCCS for continued condenser efficiency. The fans are operated by operator action and are powered by a reliable power source which has a diesel generator backed up by an ancillary diesel if necessary without the need to enter the primary containment.

These functions maintain containment pressure below the design pressure by counteracting a slight increase in noncondensable gases over time. They are not risk-significant and the proposed regulatory oversight is in the Availability Controls Manual.

19A.8.4.11 Reactor Building HVAC Purge Exhaust Filters

The reactor building contaminated area ventilation system filters must maintain the required filtering efficiency to ensure that theoretical control room doses are not exceeded for certain beyond design basis LOCAs. Failure to provide adequate filtration is considered to be an adverse system interaction. They have regulatory oversight in the Availability Controls Manual to provide assurance that they are capable of performing their function.

19A.8.4.12 Lower Drywell Hatches

An equipment hatch for removal of equipment during maintenance and an air lock for entry of personnel are provided in the lower drywell. These access openings are sealed under normal plant operation but may be opened when the plant is shut down. Closure of both hatches is required for the shutdown Loss-of-Coolant Accident (LOCA) below top of active fuel (TAF) initiators during MODES 5 and 6. Due to the low frequency of occurrence, this function is not risk-significant and the proposed regulatory oversight is in the Availability Controls Manual.

19A.8.4.13 Standby Liquid Control System Actuation/Feedwater Runback Logic

The regulatory treatment of the ATWS actuation logic and Feedwater Runback Logic functions is provided in subsection 19A.8.4.1, and the treatment of the SLC actuation for LOCA is provided in subsection 19A.8.4.3. These functions are included in the Availability Controls Manual.

ACM 3.0 AVAILABILITY CONTROL LIMITING CONDITION FOR OPERATION (ACLCO) APPLICABILITY

ACLCO 3.0.1 ACLCOs shall be met during the MODES or other specified conditions in the Applicability, except as provided in ACLCO 3.0.2.

ACLCO 3.0.2 Upon discovery of a failure to meet an ACLCO, the Required Actions of the associated Conditions shall be met, except as provided in ACLCO 3.0.5 and ACLCO 3.0.6.

If the ACLCO is met or is no longer applicable prior to expiration of the specified Completion Time(s), completion of the Required Action(s) is not required, unless otherwise stated.

ACLCO 3.0.3 When an ACLCO is not met and the associated ACTIONS are not met, an associated ACTION is not provided, or if directed by the associated ACTIONS, action shall be initiated to:

a. Restore compliance with the ACLCO or associated ACTIONS; ~~and~~

b. Assess and manage the risk of the resulting unit configuration, and

---

- NOTE -

ACLCO 3.0.3.~~b~~c shall be completed if ACLCO 3.0.3 is entered.

~~b~~c. Enter the circumstances into the Corrective Action Program.

Exceptions to this ACLCO are stated in the individual ACLCOs.

ACLCO 3.0.4 When an ACLCO is not met, entry into a MODE or other specified condition in the Applicability shall only be made:

a. When the associated ACTIONS to be entered permit continued operation in the MODE or other specified condition in the Applicability for an unlimited period of time;

BASES

ACLCO 3.0.3

ACLCO 3.0.3 establishes the actions that must be implemented when an ACLCO is not met and:

a. An associated Required Action and Completion Time is not met and no other Condition applies; or

b. The condition of the unit is not specifically addressed by the associated ACTIONS. This means that no combination of Conditions stated in the ACTIONS can be made that exactly corresponds to the actual condition of the unit. Sometimes, possible combinations of Conditions are such that entering ACLCO 3.0.3 is warranted; in such cases, the ACTIONS specifically state a Condition corresponding to such combinations and also that ACLCO 3.0.3 be entered immediately.

This Requirement requires: a) an Action to initiate efforts to restore compliance with the ACLCO or associated ACTIONS; b) assessing and managing the risk of the resulting unit configuration in accordance with the maintenance rule program (refer to Bases for ACLCO 3.0.4.b for discussion of risk evaluation scope); and ~~b~~c) an Action that requires entering the circumstances into the Corrective Action Program (CAP). These actions ensure that the appropriate resources will continue to be focused on restoring compliance with the ACLCO or associated ACTIONS and that the circumstances concerning failure to comply with the Availability Controls Manual (ACM) requirements will be reviewed. This review will be conducted in accordance with the procedural guidance for CAP notifications.

Exceptions to ACLCO 3.0.3 are addressed in the individual Requirements.

ACLCO 3.0.4

ACLCO 3.0.4 establishes limitations on changes in MODES or other specified conditions in the Applicability when an ACLCO is not met. It allows placing the unit in a MODE or other specified condition stated in that Applicability (i.e., the Applicability desired to be entered) when unit conditions are such that the requirements of the ACLCO would not be met, in accordance with ACLCO 3.0.4.a, ACLCO 3.0.4.b, or ACLCO 3.0.4.c.

ACM B 3.3 INSTRUMENTATION

AC B 3.3.1 Alternate Rod Insertion (ARI)

BASES

This Availability Control (AC) addresses AVAILABILITY of the Alternate Rod Insertion (ARI) function of the air header dump valves in the Control Rod Drive (CRD) system. The ARI function of the Control Rod Drive (CRD) system provides an alternate means for actuating hydraulic scram that is diverse and independent from the Reactor Protection System (RPS). The ARI function of the Anticipated Transient Without Scram (ATWS) mitigation logic is implemented as nonsafety-related logic that is processed by the Diverse Protection System (DPS) (reference Subsection 7.8.1.1.2). The DPS generates the signal; to open the ARI (air header dump) valves in the CRD system on any of the following signals: persistent high power with a Selected Control Rod Run-in (SCRRI) command issued; persistent high power following an RPS scram demand; high reactor dome pressure; low reactor vessel water Level 2; or manual operator action. Following receipt of any of these signals, solenoid operated valves on the scram air header actuate to depressurize the header, allowing the Hydraulic Control Unit (HCU) scram valves to open. The control rod drives then insert the control rods hydraulically.

The ARI function is a nonsafety-related function that satisfies the significance criteria for Regulatory Treatment of Non-Safety Systems, and therefore requires regulatory oversight. The short-term availability controls for this function, which are specified as Completion Times, are acceptable to ensure that the availability of this function is consistent with the functional unavailability in the ESBWR PRA. The surveillance requirements also provide an adequate level of support to ensure that component performance is consistent with the functional reliability in the ESBWR PRA.

~~Operability and surveillance testing of Reactor Protection System (RPS) and Nuclear Monitoring System (NMS) instrumentation providing signals to the ARI function are addressed in Technical Specifications (TS) Limiting Conditions for Operation (LCO) 3.3.1.1, "Reactor Protection System (RPS) Instrumentation," and LCO 3.3.1.4, "Nuclear Monitoring System (NMS) Instrumentation."~~

ACM 3.3 INSTRUMENTATION

AC 3.3.2 Anticipated Transient Without Scram (ATWS) / Standby Liquid Control (SLC) System Actuation

ACLCO 3.3.2 The ~~SLC System actuation function of the~~ ATWS/SLC ~~logic~~ Functions in Table 3.3.2-1 shall be AVAILABLE.

APPLICABILITY: MODES 1 and 2.

ACTIONS

CONDITION	REQUIRED ACTION	COMPLETION TIME
A. ~~SLC actuation function of the~~ One or more ~~required~~ ATWS/SLC ~~logic~~ Functions unavailable.	A.1 Restore ~~SLC actuation function of the~~ ~~required~~ ATWS/SLC ~~logic~~ Function(s) to AVAILABLE status.	7 days
B. Required Action and associated Completion Time not met.	B.1 Enter ACLCO 3.0.3.	Immediately

SURVEILLANCE REQUIREMENTS

SURVEILLANCE		FREQUENCY
ACSR 3.3.2.1	Verify SLC actuation on receipt of an actual or simulated actuation signal.	24 months
ACSR 3.3.2.2	Verify Reactor Water Cleanup / Shutdown Cooling (RWCU/SDC) isolation on receipt of an actual or simulated actuation signal.	24 months

SURVEILLANCE		FREQUENCY
ACSR 3.3.2.3	Verify ADS Inhibit function actuation on receipt of an actual or simulated actuation signal.	24 months
ACSR 3.3.2.~~2~~4	Perform LOGIC SYSTEM FUNCTIONAL TEST ~~for each required SLC actuation function of the ATWS/SLC automatic actuation division~~.	24 months on a STAGGERED TEST BASIS

ACM B 3.3 INSTRUMENTATION

AC B 3.3.2 Anticipated Transient Without Scram (ATWS) / Standby Liquid Control (SLC) System Actuation

BASES

The Standby Liquid Control (SLC) System provides a diverse backup capability for reactor shutdown, independent of normal reactor shutdown with control rods. It also provides makeup water to the reactor pressure vessel (RPV) to mitigate the consequences of a LOCA. Operability of the SLC System, including the squib-actuated valves, is addressed in Technical Specification (TS) 3.1.7, "Standby Liquid Control (SLC) System." ~~Operability of the instrumentation sensors is addressed in TS 3.3.1.1, "Reactor Protection System (RPS) Instrumentation."~~For Anticipated Transient Without Scram (ATWS) mitigation, the Safety System Logic and Control Engineered Safety Feature (SSLC/ESF) initiation of the Automatic Depressurization System (ADS) is inhibited automatically. The ADS Inhibit function supports proper operation of the SLC System for diverse backup reactor shutdown. This Availability Control addresses only the actuation logic associated with the ATWS/SLC actuation of SLC for diverse backup reactor shutdown (reference Subsection 7.8.1.1.1). ~~and includes~~ isolation of Reactor Water Clean-Up / Shutdown Cooling (RWCU/SDC) on ATWS/SLC initiation (reference Subsection 7.4.1.2), and the actuation logic associated with the ATWS/SLC ADS inhibit function (reference Subsection 7.8.1.1.2).

There ~~is an~~are ATWS mitigation logic processors in each of four divisional Reactor Trip and Isolation Function (RTIF) cabinets. The ATWS mitigation logic processors are separate and diverse from RPS circuitry. Each ATWS mitigation logic processor uses discrete programmable logic devices for ATWS mitigation logic processing. The programmable logic devices provide voting logic, control logic, and time delays for evaluating the plant conditions for automatic initiation of SLC boron injection. Although there are four divisions of the ATWS/SLC platform for each Function, only two divisions are required for a Function to be considered AVAILABLE. The two required divisions are those divisions associated with the DC and Uninterruptible AC Electrical Power Distribution Divisions required by LCO 3.8.6, "Distribution Systems - Operating," and LCO 3.8.7, "Distribution Systems - Shutdown."

Automatic initiation of the ATWS/SLC occurs on High RPV dome pressure and a Startup Range Neutron Monitor (SRNM) ATWS permissive, or Low RPV water level (L2) and a SRNM ATWS permissive for 3 minutes or greater. To avoid reducing boron concentration during SLC operation, the ATWS/SLC system logic also transmits an isolation signal to the RWCU/SDC via the Leak Detection and Isolation System (LD&IS).

ADS Inhibit required by this AC is automatically initiated by the following signals:

ACM B 3.3 INSTRUMENTATION

AC B 3.3.3 Feedwater Runback (FWRB)

BASES

The feedwater runback logic provides a quick power reduction in response to Anticipated Transient Without Scram (ATWS) conditions. ~~The Feedwater Control System (FWCS) initiates a runback of feedwater pump feedwater demand to zero and closes the Low Flow Control Valve (LFCV) and Reactor Water Cleanup/Shutdown Cooling (RWCU/SDC) overboard flow control valve upon receipt of an ATWS trip signal from the Anticipated Transient Without Scram/Standby Liquid Control (ATWS/SLC) logic. Operability of the instrumentation sensors is addressed in TS 3.3.1.1, "Reactor Protection System (RPS) Instrumentation."~~ This Availability Control addresses the ~~ATWS/SLC actuation~~Diverse Protection System (DPS) logic and Feedwater Control System (FWCS) components associated with the FWRB function.

~~There is an ATWS logic processor in each of four divisional Reactor Trip and isolation Function (RTIF) cabinets. The ATWS logic processors are separate and diverse from Reactor Protection System (RPS) circuitry. Each ATWS logic processor uses discrete programmable logic devices for ATWS mitigation logic processing. The programmable logic devices provide voting logic, control logic, and time delays for evaluating the plant conditions for automatic initiation of feedwater runback.~~

The FWRB function of the ATWS mitigation logic is implemented as nonsafety-related logic that is processed by the DPS (reference Subsections 7.8.1.1.1.1 and 7.8.1.2). The DPS generates an actuation signal on any of the following signals: ~~Automatic initiation of the FWRB occurs on~~ persistent high power with a Selected Control Rod Run-In / Select Rod Insert (SCRRI/SRI) command issued, persistent high power following an RPS scram demand, or ~~High RPV dome pressure with a Startup Range Neutron Monitor (SRNM) ATWS permissive~~an ATWS/SLC actuation signal. The FWCS initiates a runback of feedwater pump feedwater demand to zero and closes the Low Flow Control Valve (LFCV) and Reactor Water Cleanup/Shutdown Cooling (RWCU/SDC) overboard flow control valve when it receives a valid actuation signal.

The ATWS/SLC logic also provides actuation of the Standby Liquid Control (SLC) System for diverse backup reactor shutdown. ~~This~~ The ATWS/SLC function is addressed in Availability Control 3.3.2, " Anticipated Transient Without Scram (ATWS)/Standby Liquid Control (SLC) System Actuation."

The FWRB function is a nonsafety-related function that satisfies the significance criteria for Regulatory Treatment of Non-Safety Systems, and therefore requires regulatory oversight. The short-term availability controls for this function, which are specified as Completion Times, are acceptable to ensure that the availability of this function is consistent with the functional unavailability in the ESBWR PRA. The surveillance requirements also provide an adequate

DPS
AC 3.3.~~6~~5

ACM 3.3 INSTRUMENTATION

AC 3.3.~~6~~ 5 Diverse Protection System (DPS)

ACLCO 3.3.~~6~~5 The DPS Functions in Table 3.3.~~6~~5-1 shall be AVAILABLE.

APPLICABILITY: MODES 1, 2, 3, and 4.

ACTIONS

CONDITION	REQUIRED ACTION	COMPLETION TIME
A. One or more ~~required~~ DPS Functions unavailable.	A.1 Restore ~~required~~ DPS Function(s) to AVAILABLE Status.	30 days
B. Required Action and associated Completion Time not met.	B.1 Enter ACLCO 3.0.3.	Immediately

SURVEILLANCE REQUIREMENTS

SURVEILLANCE		FREQUENCY
ACSR 3.3.~~6~~5.1	Perform CHANNEL CHECK.	~~24~~ 12 hours
ACSR 3.3.~~6~~5.2	Perform CHANNEL FUNCTIONAL TEST.	~~24 months~~92 days
ACSR 3.3.~~6~~5.3	Perform CHANNEL CALIBRATION.	24 months
ACSR 3.3.~~6~~5.4	Perform LOGIC SYSTEM FUNCTIONAL TEST.	24 months

ACM B 3.3 INSTRUMENTATION

AC B 3.3.~~6~~5 Diverse Protection System (DPS)

BASES

DPS provides diverse actuation functions that enhance the plant's ability to mitigate dominant accident sequences involving the common cause failure of actuation logic or controls. The DPS Functions are implemented in a highly reliable triple redundant control system whose sensors, hardware, and software are diverse from their counterparts on any of the safety-related platforms.

The following diverse actuation Functions are provided by DPS:

- A set of protection logics that provide a diverse means to scram the reactor via control rod insertion (reference Subsection 7.8.1.2.1),
- A set of initiation logics that provide a diverse means to initiate certain engineered safety features (ESF) functions (Safety Relief Valves, Isolation Condenser System, and Standby Liquid Control System (reference Subsection 7.8.1.2.2)),
- A set of initiation logics that provide a diverse means to initiate closure of the main Steam isolation Valves (reference Subsection 7.8.1.2.4), and
- A set of initiation logics that provide a diverse means of control rod insertion by means of Fine Motor Control Rod Drive Run-in (reference Subsection 7.8.1.1.2).

For Anticipated Transient Without Scram (ATWS) mitigation, the DPS initiation of ADS is inhibited automatically. The ADS Inhibit Function required by this AC is automatically actuated by nonsafety-related logic that is processed by the DPS (reference Subsection 7.8.1.2.3). The ADS Inhibit Function prevents an undesirable DPS initiation of the ADS during ATWS conditions.

The DPS Functions are nonsafety-related functions that satisfy the significance criteria for Regulatory Treatment of Non-Safety Systems, and therefore require regulatory oversight. The short-term availability controls for these Functions, which are specified as Completion Times, are acceptable to ensure that the availability of these Functions is consistent with the functional unavailability in the ESBWR PRA. The surveillance requirements also provide an adequate level of support to ensure that component performance is consistent with the functional reliability in the ESBWR PRA.

ACM 3.5 EMERGENCY CORE COOLING SYSTEM (ECCS)

AC 3.5.1 Gravity-Driven Cooling System (GDCS) Deluge Function

ACLCO 3.5.1	~~Two~~ Six deluge valves shall be AVAILABLE.

APPLICABILITY: MODES 1, 2, 3, and 4.

ACTIONS

CONDITION	REQUIRED ACTION	COMPLETION TIME
A. Required deluge valves unavailable.	A.1 Restore required deluge valves to AVAILABLE Status.	7 days
B. Required Action and associated Completion Time not met.	B.1 Enter ACLCO 3.0.3.	Immediately

SURVEILLANCE REQUIREMENTS

SURVEILLANCE		FREQUENCY
ACSR 3.5.1.1	Perform CHANNEL CHECK on GDCS deluge associated drywell atmosphere thermocouples and lower drywell basemat thermocouples.	12 hours
ACSR 3.5.1.~~1~~2	---------- **- NOTE -** Not required to be met for one squib firing circuit intermittently bypassed under administrative controls. ---------- Verify continuity of required firing circuits in squib-actuated valves.	31 days

SURVEILLANCE		FREQUENCY
ACSR 3.5.1.3	Perform CHANNEL CALIBRATION on GDCS deluge associated drywell atmosphere thermocouples and lower drywell basemat thermocouples.	24 months
ACSR 3.5.1.~~2~~4	---------- **- NOTE -** Squib actuation may be excluded. ---------- Verify required deluge valves actuate on an actual or simulated automatic initiation signal.	24 months
ACSR 3.5.1.~~3~~5	Perform LOGIC SYSTEM FUNCTIONAL TEST ~~for each required Deluge automatic actuation division~~.	24 months ~~on a STAGGERED TEST BASIS~~
ACSR 3.5.1.~~4~~6	---------- **- NOTE -** Squib actuation may be excluded. ---------- Verify the flow path for each deluge line is not obstructed.	10 years

ACM B 3.5 EMERGENCY CORE COOLING SYSTEM (ECCS)

AC B 3.5.1 Gravity-Driven Cooling System (GDCS) Deluge Function

BASES

The deluge function provides a means of flooding the lower drywell region and the Basemat Internal Melt Arrest and Coolability (BiMAC) Device with GDCS pool water in the event of a core melt sequence which causes failure of the lower vessel head and allows molten fuel to reach the lower drywell floor. Deluge line flow is initiated by thermocouples, which sense high lower drywell region basemat temperatures indicative of molten fuel on the lower drywell floor. Logic circuits actuate squib-type valves in the deluge lines upon detection of basemat temperatures exceeding setpoint values, provided another set of dedicated thermocouples also sense the drywell temperature to be higher than a preset value. The pyrotechnic material of the squib charge used in the deluge valve is different than what is used in the other GDCS squib valves to prevent common mode failure.

Only ~~two~~ six of the deluge valves, and their associated instrumentation sensors and actuation logics, are required to be AVAILABLE to remove decay heat energy and the energy from zirconium-water reaction and allow for quenching of core debris. Three GDCS pools, located above the wetwell, at an elevation above the reactor core, contain the water that supports all four GDCS trains for the injection and deluge subsystems and is assured by Technical Specification LCO 3.5.2, "GDCS - Operating." Only two of these GDCS pools are required to support the availability of the six required deluge valves.

The deluge function is a nonsafety-related function that satisfies the significance criteria for Regulatory Treatment of Non-Safety Systems, and therefore requires regulatory oversight. The short-term availability controls for this function, which are specified as Completion Times, are acceptable to ensure that the availability of this function is consistent with the functional unavailability in the ESBWR PRA. The surveillance requirements also provide an adequate level of support to ensure that component performance is consistent with the functional reliability in the ESBWR PRA.

ACM 3.7 PLANT SYSTEMS

AC 3.7.2 Fuel and Auxiliary Pools Cooling System (FAPCS) - Operating

ACLCO 3.7.2 Two Fuel and Auxiliary Pools Cooling System (FAPCS) trains shall be AVAILABLE.

APPLICABILITY: MODES 1, 2, 3, and 4.

ACTIONS

CONDITION	REQUIRED ACTION	COMPLETION TIME
A. One FAPCS train unavailable.	A.1 Restore required FAPCS train to AVAILABLE status.	14 days
B. Two FAPCS trains unavailable.	B.1 Restore one FAPCS train to AVAILABLE status.	24 hours
C. Required Action and associated Completion Time not met.	C.1 Enter ACLCO 3.0.3.	Immediately

SURVEILLANCE REQUIREMENTS

SURVEILLANCE		FREQUENCY
ACSR 3.7.2.1	Verify that each manual, power-operated, or automatic valve in the flow path that is not locked, sealed, or otherwise secured in its correct position is in the correct position or can be aligned to the correct position.	31 days

ACM 3.8 ELECTRICAL POWER SYSTEMS

AC 3.8.1 Standby Diesel Generators - Operating

ACLCO 3.8.1 One standby diesel generator shall be AVAILABLE.

APPLICABILITY: MODES 1, 2, 3, and 4

ACTIONS

CONDITION	REQUIRED ACTION	COMPLETION TIME
A. Required standby diesel generator unavailable.	A.1 Restore required standby diesel generator to AVAILABLE status.	14 days
B. Required Action and associated Completion Time not met.	B.1 Enter ACLCO 3.0.3.	Immediately

SURVEILLANCE REQUIREMENTS

SURVEILLANCE		FREQUENCY
ACSR 3.8.1.1	Verify that the fuel oil volume in the required standby diesel generator fuel tank is within limits.	31 days
ACSR 3.8.1.2	Verify that the required standby diesel generator starts and operates at rated load for ≥ 1 hour.	92 days
ACSR 3.8.1.3	Verify the fuel oil transfer system operates to transfer fuel oil from storage tank to the required standby diesel generator day tank.	92 days

SURVEILLANCE		FREQUENCY
ACSR 3.8.1.4	Verify required standby diesel generator starts and achieves rated speed and voltage upon receipt of an undervoltage signal and sequences its designed loads while maintaining voltage and frequency within design limits.	24 months
ACSR 3.8.1.5	Verify required standby diesel generator starts and operates at rated load for ≥ 24 hours.	24 months

SURVEILLANCE REQUIREMENTS

SURVEILLANCE		FREQUENCY
ACSR 3.8.2.1	Verify that the fuel oil volume in the ~~required~~ standby diesel generator fuel tank is within limits.	31 days
ACSR 3.8.2.2	Verify that the ~~required~~ standby diesel generator starts and operates at rated load for ≥ 1 hour.	92 days
ACSR 3.8.2.3	Verify the fuel oil transfer system operates to transfer fuel oil from storage tank to each standby diesel generator day tank.	92 days
ACSR 3.8.2.4	Verify standby diesel generator starts and achieves rated speed and voltage upon receipt of an undervoltage signal and sequences its designed loads while maintaining voltage and frequency within design limits.	24 months
ACSR 3.8.2.5	Verify standby diesel generator starts and operates at rated load for ≥ 24 hours.	24 months

ACM B 3.8 ELECTRICAL POWER SYSTEMS

AC B 3.8.1 / B 3.8.2 Standby Diesel Generators

BASES

The Diesel Generators (DGs) are required to provide power for recharging batteries to support post-accident monitoring (i.e., [RTNSS] Criterion B), and for Fuel and Auxiliary Pools Cooling System (FAPCS) in non-seismic PRA sequences (i.e., [RTNSS] Criterion C). No DG-derived AC power is required for 72 hours after an abnormal event. In addition, the DGs provide power to the Reactor Water Cleanup / Shutdown Cooling (RWCU/SDC) system operating in the shutdown cooling mode in the event of a loss of preferred power (LOPP).

The DG function is a nonsafety-related function that satisfies the significance criteria for Regulatory Treatment of Non-Safety Systems, and therefore requires regulatory oversight. The short-term availability controls for this function, which are specified as Completion Times, are acceptable to ensure that the availability of this function is consistent with the functional unavailability in the ESBWR PRA. The surveillance requirements also provide an adequate level of support to ensure that component performance is consistent with the functional reliability in the ESBWR PRA.

One DG is required to be AVAILABLE during MODES 1, 2, 3, and 4 to support FAPCS and the ability to recharge batteries to support post-accident monitoring. Two DGs are required be OPERABLE during MODES 5 and 6 when core heat removal is being performed by the RWCU/SDC system. Planned maintenance should not be performed on the DGs during operation in MODES 5 or 6. The bases for this requirement is that the AC power is more risk important during shutdown MODES, especially when the RCS is open than during other MODES.

DG starts required by ACSRs ~~3.8.1.2 and ACSR 3.8.2.2~~ may be preceded by an engine prelube period prior to starting and warm-up period prior to loading to minimize wear and tear on the DGs during testing. For the purpose of this testing, the DGs must be started from standby conditions, that is, with the engine coolant and oil being continuously circulated and temperature maintained consistent with manufacturer recommendations. Testing required by ACSR 3.8.1.~~2~~5 ~~and ACSR 3.8.2.2~~ also demonstrates OPERABILITY of the associated fuel oil transfer pump and necessary DG support system function(s).~~).~~

SURVEILLANCE		FREQUENCY
ACSR 3.8.3.3	Verify the fuel oil transfer system operates to transfer fuel oil from storage tank to each ancillary diesel generator day tank.	92 days
ACSR 3.8.3.4	Verify that each ancillary diesel generator starts and operates at rated load for ≥ 24 hours.	24 months

ACM B 3.8 ELECTRICAL POWER SYSTEM

AC B 3.8.3 Ancillary Diesel Generators

BASES

Upon a loss of power, the ancillary diesel generators are required to support operation of core cooling, containment integrity, control room habitability, and post-accident monitoring.

The ancillary diesel generator function is a nonsafety-related function that satisfies the significance criteria for Regulatory Treatment of Non-Safety Systems, and therefore requires regulatory oversight. The short-term availability controls for this function, which are specified as Completion Times, are acceptable to ensure that the availability of this function is consistent with the functional unavailability in the ESBWR PRA. The surveillance requirements also provide an adequate level of support to ensure that component performance is consistent with the functional reliability in the ESBWR PRA.

DG starts required by ACSRs may be preceded by an engine prelube period prior to starting and warm-up period prior to loading to minimize wear and tear on the DGs during testing.