B/20

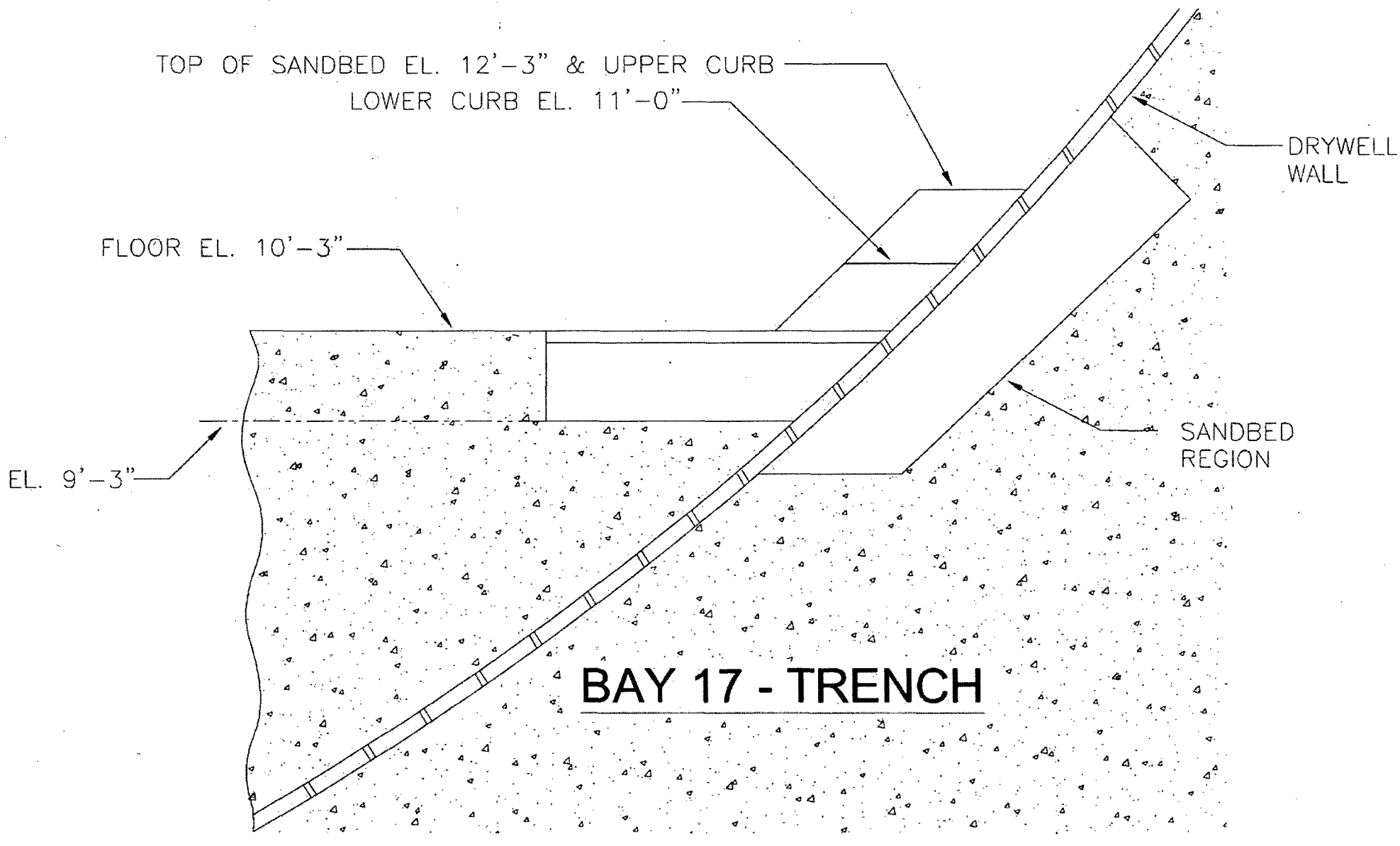
TOP OF SANDBED EL. 12'-3" & UPPER CURB
LOWER CURB EL. 11'-0"
DRYWELL WALL
FLOOR EL. 10'-3"
SANDBED REGION
EL. 9'-3"
BAY 17 - TRENCH