PRELIMINARY

GE Hitachi Nuclear Energy

26A6642BH
Revision 6
June 2009

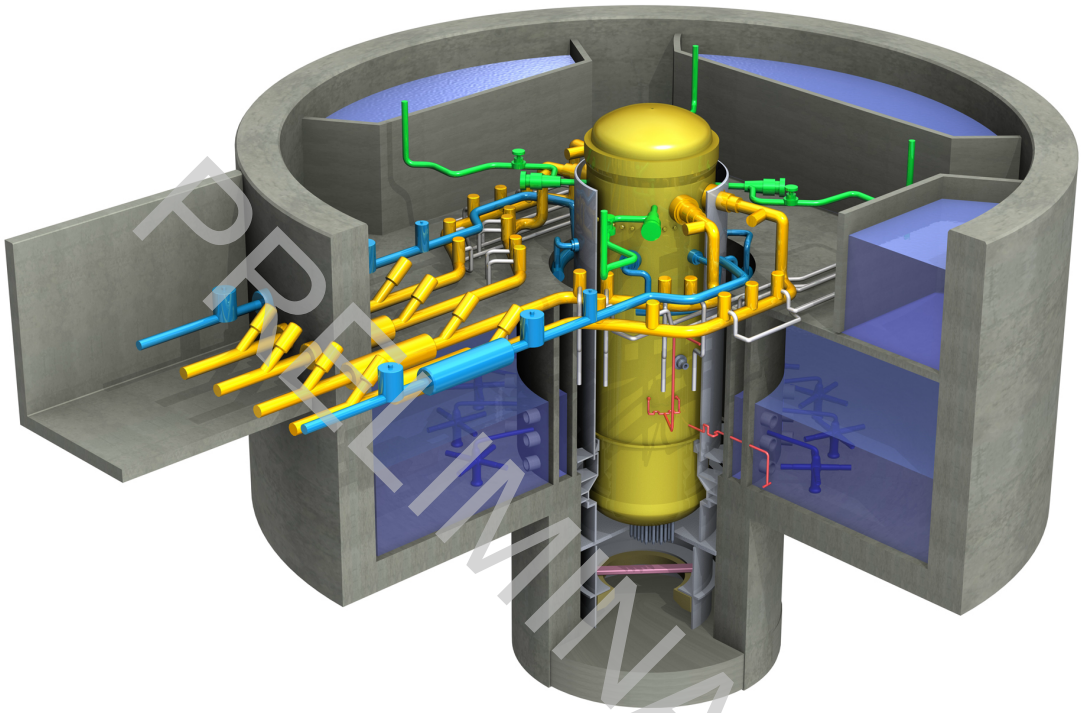

PRELIMINARY

ESBWR Design Control Document
Tier 2

Chapter 11
Radioactive Waste Management

Contents

11. Radioactive Waste Management 11.1-1
11.1 Source Terms 11.1-1
11.1.1 Fission Products 11.1-1
11.1.2 Activation Products 11.1-3
11.1.3 Radionuclide Concentration Adjustment 11.1-4
11.1.4 Fuel Fission Production Inventory 11.1-5
11.1.5 Process Leakage Sources 11.1-5
11.1.6 COL Information 11.1-6
11.1.7 References 11.1-6
11.2 Liquid Waste Management System 11.2-1
11.2.1 Design Bases 11.2-1
11.2.2 System Description 11.2-2
11.2.2.1 Summary Description 11.2-2
11.2.2.2 System Operation 11.2-3
11.2.2.3 Detailed System Component Description 11.2-5
11.2.3 Safety Evaluation - Radioactive Releases 11.2-7
11.2.3.1 Safety Evaluation 11.2-7
11.2.3.2 Radioactive Releases 11.2-7
11.2.3.3 Dilution Factors 11.2-8
11.2.4 Testing and Inspection Requirements 11.2-8
11.2.5 Instrumentation Requirements 11.2-9
11.2.6 COL Information 11.2-9
11.2.7 References 11.2-9
11.3 Gaseous Waste Management System 11.3-1
11.3.1 Design Bases 11.3-1
11.3.2 Offgas System Description 11.3-2
11.3.2.1 Process Functions 11.3-2
11.3.2.2 Process Equipment 11.3-3
11.3.2.3 Process Facility 11.3-3
11.3.2.4 Releases 11.3-3
11.3.2.5 Process Design 11.3-4
11.3.2.6 Component Design 11.3-8
11.3.2.7 Seismic Design 11.3-11
11.3.3 Ventilation System 11.3-11
11.3.4 Radioactive Releases 11.3-12
11.3.5 Testing and Inspection Requirements 11.3-12
11.3.6 Instrumentation Requirements 11.3-12
11.3.7 Radioactive OffGas System Leak or Failure 11.3-13
11.3.7.1 Basis and Assumptions 11.3-13
11.3.7.2 Results 11.3-14
11.3.8 COL Information 11.3-14
11.3.9 References 11.3-14
11.4 Solid Waste Management System 11.4-1
11.4.1 SWMS Design Bases 11.4-1

PRELIMINARY

11.4.2 System Description 11.4-3
11.4.2.1 Summary Description 11.4-3
11.4.2.2 System Operation 11.4-3
11.4.2.3 Detailed System Component Description 11.4-6
11.4.3 Safety Evaluation 11.4-7
11.4.4 Testing and Inspection Requirements 11.4-7
11.4.5 Instrumentation Requirements 11.4-8
11.4.6 COL Information 11.4-8
11.4.7 References 11.4-9
11.5 Process Radiation Monitoring System 11.5-1
11.5.1 Design Bases 11.5-1
11.5.1.1 Design Objectives 11.5-1
11.5.2 System Design Bases and Criteria 11.5-2
11.5.2.1 Radiation Monitors Required for Safety 11.5-3
11.5.2.2 Radiation Monitors Required for Plant Operation 11.5-4
11.5.3 Subsystem Description 11.5-4
11.5.3.1 Radiation Monitors Required for Safety 11.5-4
11.5.3.2 Radiation Monitors Required for Plant Operation 11.5-9
11.5.4 Regulatory Evaluation 11.5-18
11.5.4.1 Basis for Monitor Location Selection 11.5-18
11.5.4.2 Expected Radiation Levels 11.5-19
11.5.4.3 Instrumentation 11.5-19
11.5.4.4 Setpoints 11.5-19
11.5.4.5 Offsite Dose Calculation Manual 11.5-19
11.5.4.6 Process and Effluent Monitoring Program 11.5-19
11.5.4.7 Sensitivity or Subsystem Lower Limit of Detection 11.5-20
11.5.4.8 Site Specific Offsite Dose Calculation 11.5-20
11.5.4.9 Instrument Sensitivities 11.5-20
11.5.5 Process Monitoring and Sampling 11.5-20
11.5.5.1 Implementation of General Design Criterion 19 ..... 11.5-20
11.5.5.2 Implementation of General Design Criterion 60 ..... 11.5-20
11.5.5.3 Implementation of General Design Criterion 63 ..... 11.5-21
11.5.5.4 Implementation of General Design Criterion 64 ..... 11.5-21
11.5.5.5 Basis for Monitor Location Selection 11.5-22
11.5.5.6 Expected Radiation Levels 11.5-22
11.5.5.7 Instrumentation 11.5-22
11.5.5.8 Setpoints 11.5-22
11.5.5.9 Process and Post-Accident Sampling Programs – Regulatory Compliance 11.5-22
11.5.6 Calibration and Maintenance 11.5-23
11.5.6.1 Inspection and Tests 11.5-23
11.5.6.2 Calibration 11.5-24
11.5.6.3 Maintenance 11.5-24
11.5.6.4 IE Bulletin 80-10 (Reference 11.5-28) Evaluation 11.5-24
11.5.6.5 Implementation of 10 CFR 20.1406 (Reference 11.5-23) 11.5-25
11.5.7 COL Information 11.5-26
11.5.8 References 11.5-27

PRELIMINARY

List of Tables

Table 11.1-1 Source Term Design Basis Parameters 11.1-7
Table 11.1-2a Design Basis Noble Radiogas Source Terms in Steam 11.1-8
Table 11.1-2b Normal Operational Noble Radiogas Source Terms in Steam 11.1-9
Table 11.1-3 Calculational Parameters For Source Term Adjustment 11.1-10
Table 11.1-4a Design Basis Iodine Radioisotopes in Reactor Water and Steam 11.1-11
Table 11.1-4b Normal Operational Iodine Radioisotopes in Reactor Water and Steam 11.1-12
Table 11.1-5a Design Basis Non-Volatile Fission Products In Reactor Water 11.1-13
Table 11.1-5b Normal Operational Non-Volatile Fission Products In Reactor Water 11.1-14
Table 11.1-6 Design Basis*** N16 Concentrations in Reactor Water and Steam 11.1-15
Table 11.1-7a Design Basis Non-Coolant Activation Products in Reactor Water 11.1-16
Table 11.1-7b Normal Operational Non-Coolant Activation Products in Reactor Water 11.1-17
Table 11.2-1 Equipment Codes (from Table 1, RG 1.143) 11.2-11
Table 11.2-2a LWMS Component Capacity (Tanks)* 11.2-12
Table 11.2-2b LWMS Component Capacity (Pumps) 11.2-13
Table 11.2-2c LWMS Component Capacity 11.2-14
Table 11.2-3 Decontamination Factors*** 11.2-15
Table 11.2-4 Probable Inputs to LWMS from Operational Occurrences 11.2-16
Table 11.3-1 Offgas System Design Parameters(1) 11.3-16
Table 11.3-2 Offgas System Major Equipment Items 11.3-18
Table 11.3-3 Equipment Malfunction Analysis 11.3-20
Table 11.3-4 Offgas System Failure Accident Parameters 11.3-23
Table 11.3-5 Isotopic Source Rates for Design Basis* 11.3-24
Table 11.3-6 Releases to the Environment* 11.3-25
Table 11.3-7 Offgas System Failure Meteorology and Dose Results 11.3-26
Table 11.4-1 SWMS Component Capacities 11.4-11
Table 11.4-2 Annual Shipped Waste Volumes♦ 11.4-12
Table 11.5-1 Process and Effluent Radiation Monitoring Systems 11.5-29
Table 11.5-2 Process Radiation Monitoring System (Gaseous and Airborne Monitors) 11.5-33
Table 11.5-3 Key to Radiation Monitors Shown on Figure 11.5-1 ..... 11.5-39
Table 11.5-4 Process Radiation Monitoring System (Liquid Monitors) 11.5-40
Table 11.5-5 Provisions for Sampling Liquid Streams 11.5-41
Table 11.5-6 Provisions for Sampling Gaseous Streams 11.5-44
Table 11.5-7 Radiological Analysis Summary of Liquid Effluent Samples 11.5-46
Table 11.5-8 Radiological Analysis Summary of Gaseous Effluent Samples 11.5-47
Table 11.5-9 Process Radiation Monitoring System Estimated Dynamic Ranges 11.5-48

PRELIMINARY

List of Illustrations

Figure 11.2-1. Liquid Waste Management System Processing Diagram 11.2-17
Figure 11.2-1a. Equipment Drain 11.2-19
Figure 11.2-1b. Floor Drain 11.2-20
Figure 11.2-2. Liquid Waste Management System Processing Stream Information Directory 11.2-21
Figure 11.2-3. Detergent Drain 11.2-22
Figure 11.2-4. Chemical Drain 11.2-23
Figure 11.3-1. Offgas System 11.3-27
Figure 11.4-1. Solid Waste Management System Process Diagram 11.4-13
Figure 11.4-2. SWMS Collection Subsystem 11.4-14
Figure 11.4-3. SWMS Processing Subsystem 11.4-16
Figure 11.4-4. Dry Active Waste Processing 11.4-17
Figure 11.5-1. Location of Radiation Monitors 11.5-56
Figure 11.5-2. PRMS Channel Block Diagram 11.5-57

PRELIMINARY

11. RADIOACTIVE WASTE MANAGEMENT

11.1 SOURCE TERMS

The information provided in this section defines the radioactive source terms in the reactor water and steam which serve as design bases for the gaseous, liquid and solid radioactive waste management systems.

Radioactive source term data for boiling water reactors has been incorporated in American National Standard Institute (ANSI)/American Nuclear Society (ANS) 18.1 (Reference 11.1-1). This standard provides bases for estimating typical concentrations of the principal radionuclides that may be anticipated over the lifetime of a Boiling Water Reactor (BWR) plant. The source term data is based on the cumulative industry experience at operating BWR plants, including measurements at several stations. It therefore reflects the influence of a number of observations made during the transition period from operation with fuel of older designs to operation with fuel of current improved designs. The source terms specified in this section were obtained by applying the procedures of Reference 11.1-1 for estimation of typical source terms and adjusting the results upward, as appropriate, to assure conservative bases for design. The operational source term calculated supports compliance with General Design Criteria (GDC) 60 (Reference 11.1-5) for liquid and gaseous effluent releases, which are discussed in Subsection 12.2.2.

The various radionuclides included in the design basis term have been categorized as fission products or activation products and tabulated in the subsections that follow. The lists do not necessarily include all radionuclides that may be detectable or theoretically predicted to be present.

Those that have been included are considered to be potentially significant with respect to one or more of the following criteria:

- Plant equipment design,
- Shielding design,
- Understanding system operation and performance, and
- Measurement practicability.

The values provided in this section are not valid for calculation of environmental releases. Source terms calculated for doses in unrestricted areas are provided in Subsection 12.2.2. The scale factor for I-131 is given in Table 11.1-1 and is discussed in Subsection 12.2.2.

11.1.1 Fission Products

Noble Radiogas Fission Products

Typical concentrations of the thirteen principle noble gas fission products as observed in steam flowing from the reactor vessel are provided in the Source Term Standard ANSI/ANS-18.1 (Reference 11.1-1). Concentrations in the reactor water are considered negligible, under normal power operation because all of the gases released to the coolant are assumed to be rapidly transported out of the vessel with the steam and removed from the system with the other

PRELIMINARY

non-condensables in the main condenser. As a result of the rapid removal of the gases, the expected relative mix of gases does not depend on the reactor design.

The design basis noble gas source term mixture is from Reference 11.1-1, and is the release rates for the thirteen principle noble gases from the vessel. The noble radiogas source term rate after 30 minute decay has been used as a conventional measure of the fuel leakage rate, because it is conveniently measurable and was consistent with the nominal 30 minute offgas holdup system used on a number of early plants. A design basis noble gas release rate of 3,700 MBq/sec (100,000 µCi/sec) at 30 minutes decay has historically been used for the design of the gaseous waste treatment systems in BWR plants (Reference 11.1-2) with satisfactory results. It was selected on the basis of operating experience with consideration given to several judgmental factors, including the implications to environmental releases, system contamination, and building air contamination. The design basis principle noble radiogas source terms are presented in Table 11.1-2a, and the normal operation source terms reside in Table 11.1-2b.

Radioiodine Fission Products

For many years, design basis radioiodine source terms for BWRs have been specified to be consistent with an I-131 leak rate of 26 MBq/sec (700 µCi/sec) from the fuel (Reference 11.1-2). Experience indicated that I-131 leakage rates this high would be approached only during operation with substantial fuel cladding defects.

The design basis reactor water radioiodine concentrations are based on the relative mix of radioiodines in reactor water predicted by the data of Reference 11.1-1 with magnitudes increased such that the I-131 concentration is consistent with the Table 11.1-1 release rate from the fuel. This provides a margin relative to the expected I-131 release rate shown in Table 11.1-1. Reference 11.1-1 specifies expected concentrations of the 5 principal radioiodines in reactor water for a reference BWR design and provides bases for adjusting the concentrations for plants with relevant plant parameters that do not match those of the Reference Plant. The concentration adjustment factors were calculated as described in Subsection 12.2.2 using the plant parameters in Table 11.1-3. The design basis concentrations are presented in Table 11.1-4a, and the normal operation concentrations are in Table 11.1-4b.

The ratio of concentration in reactor steam to concentration in reactor water (carryover ratio) is taken to be 0.02 for radioiodines (Reference 11.1-1). Consequently, the design basis concentrations of radioiodines in steam are defined by multiplying the values of Table 11.1-4a by the factor 0.02.

Other Fission Products

This category includes fission products other than noble gases and iodines and also includes transuranic nuclides. Some of the fission products are noble gas daughter products that are produced in the steam and condensate system. The only transuranic which is detectable in significant concentrations is Np^{239}. Concentrations of those radionuclides that are typically observable in the coolant are provided in Reference 11.1-1 for a reference BWR plant. The Reference Plant concentrations are adjusted to obtain estimates for the ESBWR plant by using the procedure described in Subsection 11.1.3 and appropriate data from Table 11.1-3. In order to assure conservative design basis concentrations for the ESBWR, the results were increased by the factor used to obtain design basis radioiodine concentrations. The design basis reactor water concentrations are presented in Table 11.1-5a, and the normal operation concentrations reside in

Table 11.1-5b. The ratio of concentration in steam to concentration in water (carryover) for these nuclides is expected to be less than 0.001 (Reference 11.1-1). The design basis concentrations in steam are obtained by multiplying the values in Table 11.1-5a by 0.001 (Reference 11.1-1).

11.1.2 Activation Products

Coolant Activation Products

The coolant activation product of primary importance in BWRs is N^{16}. ANSI/ANS-18.1 (Reference 11.1-1) specifies a concentration of 1.85 MBq/gm (50 µCi/gm) in steam leaving the reactor vessel for plants without Hydrogen Water Chemistry (HWC). Plants with HWC are specified at 9.25 MBq/gm (250 µCi/gm). This HWC concentration is used as the design basis N^{16} concentration in steam for the ESBWR shielding design. This is treated as essentially independent of reactor design because both the production rate of N^{16} and the steam flow rate from the vessel are assumed to vary in direct proportion to reactor thermal power. It should be noted that a portion of the source term traditionally identified as "N^{16}" actually represents C^{15}. To the extent that C^{15} is present, it is generally about ~ 0.55 MBq/gm (15 µCi/gm) or less. Historically, gross gamma dose rate measurements made to confirm the magnitude of the N^{16} concentration have included responses to gamma rays from C^{15}. Use of the combined "N^{16}" source term in shielding design introduces additional conservatism because the C^{15} component has a 2.45 second half-life, and therefore decays more rapidly with transport time through the system than N^{16}, which has a 7.1 second half-life.

The design basis N^{16} concentrations in steam and reactor water are shown in Table 11.1-6. Reference 11.1-1 gives the reactor water concentration at the recirculation system. Because the ESBWR does not have an external recirculation loop, the reactor water concentration has been decay-corrected to the reactor core exit to obtain an estimated value shown in Table 11.1-1.

Non-Coolant Activation Products

Radionuclides are produced in the coolant by neutron activation of circulating impurities and by corrosion of irradiated system materials. Typical reactor water concentrations for the principal activation products are contained in Reference 11.1-1. The values of Reference 11.1-1 were adjusted to ESBWR conditions by using the procedure described in Subsection 11.1.3 and appropriate data from Table 11.1-3. These results were increased by the same factor used for the design basis radioiodine concentrations to obtain the conservative design basis reactor water concentrations shown in Table 11.1-7a, with the normal operation concentrations provided in Table 11.1-7b. The steam carryover ratio for these isotopes is estimated to be less than 0.001 (Reference 11.1-1). A factor of 0.001 is applied to the Table 11.1-7a values to obtain the design basis concentrations in steam.

Tritium

Tritium is produced by activation of naturally occurring deuterium in the primary coolant and, to a lesser extent, as a fission product in the fuel (Reference 11.1-2). The tritium is primarily present as tritiated oxide, T-O-H. Because tritium has a long half-life (12 years) and is not affected by cleanup processes in the system, the concentration is controlled by the rate of loss of water from the system by evaporation or leakage (Reference 11.1-1). Plant process water and steam have a common tritium concentration. The concentration reached depends on the actual

water loss rate; however, References 11.1-1 and 11.1-3 both specify a typical concentration of 370 Bq/gm (0.01 μCi/gm) that is stated in Reference 11.1-3 to be based on BWR experience adjusted to account for liquid recycle. This value is taken to be applicable for the ESBWR.

Argon-41

Argon-41 is produced in the reactor coolant as a consequence of neutron activation of naturally occurring Argon-40 in air that is entrained in the feedwater. The Argon-41 gas is carried out of the vessel with the steam and stripped from the system with the non-condensables in the main condenser. Observed Argon-41 levels are highly variable due to the variability in air in-leakage rates into the system. Reference 11.1-3 specifies a normal operation Argon-41 release rate from the vessel into the offgas treatment system of 1.5 MBq/sec (40 μCi/sec). This value is considered conservative as it bounds the available experimental database; this value is provided in Table 11.1-1.

11.1.3 Radionuclide Concentration Adjustment

In order to determine the estimated concentrations of radionuclides in the groups classified as iodines, other non-volatile fission products, and non-coolant activation products using the ANSI/ANS-18.1 Source Term Standard (Reference 11.1-1), it is necessary to apply appropriate adjustment factors to the Reference Plant concentrations provided in the Standard.

Equilibrium concentrations in reactor water are assumed to satisfy the relationship:

$$C = \frac{S}{M(\lambda + R)} \qquad (11.1\text{-}1)$$

where:

C = radionuclide concentration

S = radionuclide input rate to coolant

M = reactor water mass

λ = radionuclide decay constant

R = sum of removal rates of the radionuclide from the system.

Consequently, if the radionuclide input rate is taken to depend primarily on the reactor thermal power, the adjustment factors to be applied to the Reference Plant reactor water concentrations are given by:

$$\text{Adjustment Factor} = \frac{PM_r(\lambda + R_r)}{P_r M(\lambda + R)} \qquad (11.1\text{-}2)$$

where the subscript "r" refers to the Reference Plant, P is the reactor thermal power and M, λ, and R are as defined above.

The removal rate from the system is the sum of the removal rates due to the Reactor Water Cleanup System and the condensate demineralizer and is given by:

$$R = \frac{F_c E_c + F_s A B E_s}{M} \quad (11.1\text{-}3)$$

where:

F_c = cleanup system flow rate

E_c = fraction of radionuclide removed in cleanup demineralizer

F_s = steam flow rate

A = ratio of radionuclide concentration in steam to concentration in water (carryover ratio)

B = fraction of radionuclide in steam which is circulated through the condensate demineralizer

E_s = fraction of radionuclide removed in condensate demineralizer.

The Reference Plant and ESBWR plant parameters and the nuclide-dependent removal rate parameters used for the ESBWR are shown in Table 11.1-3. The nuclide-dependent parameters are the same as those used for the Reference Plant except for the fraction circulated through the condensate demineralizer.

11.1.4 Fuel Fission Production Inventory

Fuel fission product inventory information is used in establishing fission product source terms for accident analysis and is discussed in Appendix 15B.

11.1.5 Process Leakage Sources

Process leakage results in potential release of noble gases and other volatile fission products via ventilation systems. Liquid from process leaks is collected and routed to the liquid-solid radwaste system. Leakage of fluids from the process system results in the release of radionuclides into plant buildings. In general, the noble radiogases remain airborne and are released to the atmosphere with little delay via the building ventilation exhaust ducts. Other radionuclides partition between air and water and may plate-out on metal surfaces, concrete, and paint. Radioiodines are found in ventilation air as methyl iodide and as inorganic iodine (particulate, elemental, and hypoiodous acid forms).

As a consequence of normal steam and water leakage into the drywell, equilibrium drywell concentrations exist during normal operation. Purging of this activity from the drywell to the environment occurs via the Reactor Building Contaminated Area HVAC Subsystem (CONAVS) as described in Subsection 9.4.6.2.

Subsection 12.2.3 delineates the models, parameters, and sources required to evaluate the airborne concentrations of radionuclides during plant operations in various plant radiation areas due to process leakage.

Airborne release data from BWR building ventilation systems and the main condenser Mechanical Vacuum Pump (MVP) have been compiled and evaluated in Reference 11.1-4, which contains data obtained by utility personnel and from special in-plant studies of operating

BWR plants by independent organizations and by General Electric Hitachi Nuclear Energy (GEH). Releases due to process leakage are reflected in the airborne release estimates discussed in Subsection 12.2.2.

11.1.6 COL Information

None.

11.1.7 References

11.1-1 ANSI/ANS, "American National Standard Radioactive Source Term for Normal Operation of Light Water Reactors," ANSI/ANS-18.1-1999.

11.1-2 General Electric Company, "Technical Derivation of BWR 1971 Design Basis Radioactive Material Source Terms," NEDO-10871, March 1973.

11.1-3 United States Nuclear Regulatory Commission (USNRC), "Calculation of Releases of Radioactive Materials in Gaseous and Liquid Effluents from Boiling Water Reactors (BWR)," NUREG-0016, Revision 1, January 1979.

11.1-4 General Electric Company, "Airborne Releases From BWRs for Environmental Impact Evaluations," NEDO-21159, March 1976.

11.1-5 Title 10 Code of Federal Regulations, Part 50, Appendix A, "General Design Criteria 60, Control of Releases of Radioactive Materials to the Environment."

PRELIMINARY

Table 11.1-1

Source Term Design Basis Parameters

Parameter	Value
Total of the design basis release rates of the 13 noble gases (30 minute decay reference, t30)	3700 MBq/sec (100,000 µCi/sec)
Normal operational noble gas release rate (t30)	740 MBq/sec (20,000µCi/sec)
Design basis I-131 radioiodine core release rate	26 MBq/sec (700 µCi/sec)
Expected I-131 radioiodine core release rate	3.7 MBq/sec (100 µCi/sec)
Reactor core exit N^{16} concentration (design basis same as normal operation)	1.85 MBq/gm (50 µCi/gm) w/o HWC 9.25 MBq/gm (250 µCi/gm) w/HWC
Normal operational $Argon^{41}$ release rate into the offgas treatment system	1.5 MBq/sec (40 µCi/sec)

PRELIMINARY

Table 11.1-2a

Design Basis Noble Radiogas Source Terms in Steam

Isotope	Decay Constant (per hour)	Steam Concentration		Source Term at t=30min	
		(MBq/gm)	(µCi/gm)	(MBq/sec)	(µCi/sec)
Kr-83m	3.73E-1	5.4E-05	1.5E-03	1.1E+02	2.9E+03
Kr-85m	1.55E-1	9.1E-05	2.5E-03	2.0E+02	5.5E+03
Kr-85	7.37E-6	3.6E-07	9.8E-06	8.9E-01	2.4E+01
Kr-87	5.47E-1	3.0E-04	8.1E-03	5.6E+02	1.5E+04
Kr-88	2.48E-1	3.0E-04	8.1E-03	6.5E+02	1.7E+04
Kr-89	1.32E+1	1.9E-03	5.2E-02	6.4E+00	1.7E+02
Xe-131m	2.41E-3	3.0E-07	8.1E-06	7.3E-01	2.0E+01
Xe-133m	1.30E-2	4.5E-06	1.2E-04	1.1E+01	2.9E+02
Xe-133	5.46E-3	1.3E-04	3.4E-03	3.1E+02	8.4E+03
Xe-135m	2.72E+0	4.0E-04	1.1E-02	2.5E+02	6.8E+03
Xe-135	7.56E-2	3.5E-04	9.4E-03	8.1E+02	2.2E+04
Xe-137	1.08E+1	2.4E-03	6.4E-02	2.6E+01	6.9E+02
Xe-138	2.93E+0	1.4E-03	3.7E-02	7.7E+02	2.1E+04
Totals		7.3E-03	2.0E-01	3.7E+03	1.0E+05

PRELIMINARY

Table 11.1-2b

Normal Operational Noble Radiogas Source Terms in Steam

Isotope	Decay Constant (per hour)	Steam Concentration		Source Term at t=30min	
		(MBq/gm)	(µCi/gm)	(MBq/sec)	(µCi/sec)
Kr-83m	3.73E-1	1.1E-05	2.9E-04	2.2E+01	5.9E+02
Kr-85m	1.55E-1	1.8E-05	4.9E-04	4.1E+01	1.1E+03
Kr-85	7.37E-6	7.3E-08	2.0E-06	1.8E-01	4.8E+00
Kr-87	5.47E-1	6.0E-05	1.6E-03	1.1E+02	3.0E+03
Kr-88	2.48E-1	6.0E-05	1.6E-03	1.3E+02	3.5E+03
Kr-89	1.32E+1	3.8E-04	1.0E-02	1.3E+00	3.5E+01
Xe-131m	2.41E-3	6.0E-08	1.6E-06	1.5E-01	3.9E+00
Xe-133m	1.30E-2	8.9E-07	2.4E-05	2.2E+00	5.8E+01
Xe-133	5.46E-3	2.6E-05	6.9E-04	6.2E+01	1.7E+03
Xe-135m	2.72E+0	8.0E-05	2.2E-03	5.0E+01	1.4E+03
Xe-135	7.56E-2	6.9E-05	1.9E-03	1.6E+02	4.4E+03
Xe-137	1.08E+1	4.7E-04	1.3E-02	5.1E+00	1.4E+02
Xe-138	2.93E+0	2.7E-04	7.4E-03	1.5E+02	4.2E+03
Totals		1.5E-03	3.9E-02	7.4E+02	2.0E+04

PRELIMINARY

Table 11.1-3

Calculational Parameters For Source Term Adjustment

A. Plant Parameters for Source Term Adjustment		
Parameter	**Reference Plant**	**ESBWR**
Thermal Power, MWt	3400	4500
Reactor Water Mass, kg (lb)	1.7E+5 (3.8E+5)	3.06E+5 (6.74E+5)
Cleanup System Flow Rate, kg/hr (lb/hr)	5.8E+4 (1.3E+5)	8.76E+4 (1.93E+5)
Steam Flow Rate, kg/hr (lb/hr)	6.8E+6 (1.5E+7)	8.76E+6 (1.93E+7)
Ratio of Condensate Demineralizer Flow Rate to Steam Flow Rate	1	1

B. Removal Parameters for Source Term Adjustment			
Parameter	**Iodines**	**Rb, Cs**	**All Others**
Fraction removed by cleanup system	0.9	0.5	0.9
Fraction removed by condensate demineralizers	0.9	0.5	0.9
Ratio of concentration in steam and reactor water	0.02	0.001	0.001
Fraction of radionuclides in steam treated by condensate demineralizer	1	1	1

PRELIMINARY

Table 11.1-4a

Design Basis Iodine Radioisotopes in Reactor Water and Steam

Isotope	Decay Constant (per hour)	Water Concentration		Steam Concentration	
		(MBq/gm)	(µCi/gm)	(MBq/gm)	(µCi/gm)
I-131	3.59E-3	3.9E-04	1.1E-02	7.9E-06	2.1E-04
I-132	3.03E-1	3.7E-03	9.9E-02	7.4E-05	2.0E-03
I-133	3.33E-2	2.7E-03	7.2E-02	5.3E-05	1.4E-03
I-134	7.91E-1	6.8E-03	1.8E-01	1.4E-04	3.7E-03
I-135	1.05E-1	3.8E-03	1.0E-01	7.6E-05	2.1E-03

PRELIMINARY

Table 11.1-4b

Normal Operational Iodine Radioisotopes in Reactor Water and Steam

Isotope	Decay Constant (per hour)	Water Concentration		Steam Concentration	
		(MBq/gm)	(µCi/gm)	(MBq/gm)	(µCi/gm)
I-131	3.59E-3	5.6E-05	1.5E-03	1.1E-06	3.0E-05
I-132	3.03E-1	5.3E-04	1.4E-02	1.1E-05	2.8E-04
I-133	3.33E-2	3.8E-04	1.0E-02	7.6E-06	2.0E-04
I-134	7.91E-1	9.7E-04	2.6E-02	1.9E-05	5.2E-04
I-135	1.05E-1	5.5E-04	1.5E-02	1.1E-05	3.0E-04

PRELIMINARY

Table 11.1-5a

Design Basis Non-Volatile Fission Products In Reactor Water

Isotope*	Decay Constant (per hour)	Concentration	
		(MBq/gm)	(µCi/gm)
Rb-89	2.74E+0	6.9E-04	1.9E-02
Sr-89	5.55E-4	1.7E-05	4.5E-04
Sr-90	2.81E-6	1.2E-06	3.1E-05
Y-90	2.81E-6	1.2E-06	3.1E-05
Sr-91	7.31E-2	6.4E-04	1.7E-02
Sr-92	2.56E-1	1.5E-03	4.1E-02
Y-91	4.93E-4	6.6E-06	1.8E-04
Y-92	1.96E-1	9.3E-04	2.5E-02
Y-93	6.80E-2	6.4E-04	1.7E-02
Zr-95/Nb-95	4.41E-4	1.3E-06	3.6E-05
Mo-99/Tc-99m	1.05E-2	3.3E-04	8.9E-03
Ru-103/Rh-103m	7.29E-4	3.3E-06	8.9E-05
Ru-106/Rh-106	7.83E-5	5.0E-07	1.3E-05
Te -129m	8.65E-4	6.6E-06	1.8E-04
Te-131m	2.31E-2	1.6E-05	4.4E-04
Te-132	8.89E-3	1.6E-06	4.5E-05
Cs-134	3.84E-5	4.5E-06	1.2E-04
Cs-136	2.22E-3	3.0E-06	8.0E-05
Cs-137/Ba-137m	2.63E-6	1.2E-05	3.2E-04
Cs-138	1.29E+0	1.4E-03	3.8E-02
Ba-140/La-140	2.26E-3	6.6E-05	1.8E-03
Ce-141	8.88E-4	5.0E-06	1.3E-04
Ce-144/Pr-144	1.02E-4	5.0E-07	1.3E-05
Np-239	1.24E-2	1.3E-03	3.6E-02

* Nuclides shown as pairs are assumed to be in secular equilibrium. The parent decay constant and concentration are shown.

PRELIMINARY

Table 11.1-5b

Normal Operational Non-Volatile Fission Products In Reactor Water

Isotope*	Decay Constant (per hour)	Concentration	
		(MBq/gm)	(µCi/gm)
Rb-89	2.74E+0	9.9E-05	2.7E-03
Sr-89	5.55E-4	2.4E-06	6.4E-05
Sr-90	2.81E-6	1.7E-07	4.5E-06
Y-90	2.81E-6	1.7E-07	4.5E-06
Sr-91	7.31E-2	9.1E-05	2.5E-03
Sr-92	2.56E-1	2.2E-04	5.9E-03
Y-91	4.93E-4	9.5E-07	2.6E-05
Y-92	1.96E-1	1.3E-04	3.6E-03
Y-93	6.80E-2	9.2E-05	2.5E-03
Zr-95/Nb-95	4.41E-4	1.9E-07	5.1E-06
Mo-99/Tc-99m	1.05E-2	4.7E-05	1.3E-03
Ru-103/Rh-103m	7.29E-4	4.7E-07	1.3E-05
Ru-106/Rh-106	7.83E-5	7.1E-08	1.9E-06
Te -129m	8.65E-4	9.5E-07	2.6E-05
Te-131m	2.31E-2	2.3E-06	6.3E-05
Te-132	8.89E-3	2.4E-07	6.4E-06
Cs-134	3.84E-5	6.4E-07	1.7E-05
Cs-136	2.22E-3	4.3E-07	1.1E-05
Cs-137/Ba-137m	2.63E-6	1.7E-06	4.6E-05
Cs-138	1.29E+0	2.0E-04	5.4E-03
Ba-140/La-140	2.26E-3	9.4E-06	2.6E-04
Ce-141	8.88E-4	7.1E-07	1.9E-05
Ce-144/Pr-144	1.02E-4	7.1E-08	1.9E-06
Np-239	1.24E-2	1.9E-04	5.1E-03

* Nuclides shown as pairs are assumed to be in secular equilibrium. The parent decay constant and concentration are shown.

PRELIMINARY

Table 11.1-6

Design Basis*** N16 Concentrations in Reactor Water and Steam

Isotope	Half-Life	Steam Concentration*		Reactor Water Concentration**	
		(MBq/gm)	(µCi/gm)	(MBq/gm)	(µCi/gm)
N-16	7.13 sec	1.85	50	2.2	60

* During operation with hydrogen water chemistry, increase this value by a factor of five.
** Valid at core exit.
*** Normal operational concentrations are the same as design basis concentrations.

PRELIMINARY

Table 11.1-7a

Design Basis Non-Coolant Activation Products in Reactor Water

Isotope	Decay Constant (per hour)	Concentration	
		(MBq/gm)	(µCi/gm)
Na-24	4.63E-2	3.2E-04	8.7E-03
P-32	2.02E-3	6.6E-06	1.8E-04
Cr-51	1.04E-3	5.0E-04	1.3E-02
Mn-54	9.53E-5	5.8E-06	1.6E-04
Mn-56	2.69E-1	3.8E-03	1.0E-01
Fe-55	3.04E-5	1.7E-04	4.5E-03
Fe-59	6.33E-4	5.0E-06	1.3E-04
Co-58	4.05E-4	1.7E-05	4.5E-04
Co-60	1.50E-5	3.3E-05	8.9E-04
Ni-63	7.90E-7	1.7E-07	4.5E-06
Cu-64	5.42E-2	4.8E-04	1.3E-02
Zn-65	1.18E-4	1.7E-04	4.5E-03
Ag-110M	1.16E-4	1.7E-07	4.5E-06
W-187	2.90E-2	4.9E-05	1.3E-03

PRELIMINARY

Table 11.1-7b

Normal Operational Non-Coolant Activation Products in Reactor Water

Isotope	Decay Constant (per hour)	Concentration	
		(MBq/gm)	(µCi/gm)
Na-24	4.63E-2	4.6E-05	1.2E-03
P-32	2.02E-3	9.4E-07	2.6E-05
Cr-51	1.04E-3	7.1E-05	1.9E-03
Mn-54	9.53E-5	8.3E-07	2.2E-05
Mn-56	2.69E-1	5.4E-04	1.5E-02
Fe-55	3.04E-5	2.4E-05	6.4E-04
Fe-59	6.33E-4	7.1E-07	1.9E-05
Co-58	4.05E-4	2.4E-06	6.4E-05
Co-60	1.50E-5	4.7E-06	1.3E-04
Ni-63	7.90E-7	2.4E-08	6.4E-07
Cu-64	5.42E-2	6.9E-05	1.9E-03
Zn-65	1.18E-4	2.4E-05	6.4E-04
Ag-110M	1.16E-4	2.4E-08	6.4E-07
W-187	2.90E-2	7.0E-06	1.9E-04

PRELIMINARY

11.2 LIQUID WASTE MANAGEMENT SYSTEM

The ESBWR Liquid Waste Management System (LWMS) is designed to control, collect, process, handle, store, and dispose of liquid radioactive waste generated as the result of normal operation, including anticipated operational occurrences.

The LWMS is housed in the radwaste building and consists of the following four subsystems:

- Equipment (low conductivity) drain subsystem,
- Floor (high conductivity) drain subsystem,
- Chemical drain subsystem, and
- Detergent drain subsystem.

A LWMS Process Diagram depicting all four subsystems is provided in Figure 11.2-1. A LWMS Process Stream Information Directory and simplified flow diagram are provided in Figure 11.2-2. The radwaste building general arrangement drawings are provided in Figures 1.2-21 through 1.2-25. The LWMS equipment codes and component capacities are provided in Tables 11.2-1, 11.2-2a, 11.2-2b, and 11.2-2c, respectively. The process decontamination factors and normal and maximum daily inputs for the LWMS Subsystems are provided in Tables 11.2-3 and 11.2-4, respectively.

The equipment and floor drainage collection system, a major input source to the LWMS, is described in Subsection 9.3.3.

Process and effluent radiological monitoring and sampling systems are described in Section 11.5.

The LWMS complies with Regulatory Guide 1.143 (Reference 11.2-1) guidance regarding liquid radwaste treatment systems.

11.2.1 Design Bases

Safety Design Bases

The LWMS has no safety-related function.

LWMS Design Bases

LWMS design bases is provided below; process and effluent radiological monitoring systems are described in Section 11.5.

- The LWMS has the capability to process the maximum anticipated quantities of liquid waste without impairing the operation or availability of the plant during both normal and anticipated operational occurrence conditions, satisfying the requirements of Title 10 Code of Federal Regulations (CFR) Part 20 (Reference 11.2-2), 10 CFR 50.34a and 10 CFR 52.47 (Reference 11.2-3) (see Table 11.2-4 for time to process maximum inputs).
- Alternate process subsystem cross-ties and adequate storage volumes are included in the LWMS design to provide for operational and anticipated surge waste volumes.

PRELIMINARY

- The LWMS is designed so that no potentially radioactive liquids can be discharged to the environment unless they have first been monitored and diluted, as required. Offsite radiation exposures on an annual average basis are within the limits of 10 CFR 20 (Reference 11.2-2) and 10 CFR 50.34a and 10 CFR 52.47 (Reference 11.2-3).
- The LWMS is designed to meet the requirements of General Design Criteria (GDC) 60 (Reference 11.2-4) and RG 1.143 (Reference 11.2-1). Regulatory Guide 1.143 provides radioactive waste management systems; structures and components design guidance; and quality group clarification and quality assurance provisions so that liquid waste as result of natural phenomena hazards and external man-induced hazards can be successfully processed. Further, it describes provisions for mitigating Design Basis Accidents (DBA) and controlling releases of liquids containing radioactive materials; e.g., spills or tank overflows, from all plant systems outside reactor containment.
- The LWMS is designed to keep plant personnel exposure "As Low As Reasonably Achievable" (ALARA) during normal operation and plant maintenance, in accordance with RG 8.8 (Reference 11.2-5).
- The seismic category, quality group classification, and corresponding codes and standards that apply to the design of the LWMS are discussed in Section 3.2.
- All atmospheric liquid radwaste tanks are provided with an overflow connection at least the size of the largest inlet connection. The overflow is connected below the tank vent and above the high-level alarm setpoint. Each collection tank room is designed to contain the maximum liquid inventory in the event that the tank ruptures. Steel tank cubicle liners are utilized to preclude accidental releases to the environment. The radwaste tank cubical walls are sealed and coated.
- An evaluation is included in Chapter 12 to show that the proposed systems are capable of controlling releases of radioactive materials within the numerical design objectives of Appendix I to 10 CFR 50 (Reference 11.2-6).
- An evaluation is included in Chapter 12 to show that the proposed systems have sufficient capacity, redundancy, and flexibility to meet the concentration limits of 10 CFR 20 (Reference 11.2-2) during periods of equipment downtime and during operation at design basis fuel leakage.
- Temporary connections are installed up stream and down stream of the Equipment Drain and Floor Drain Subsystems of the LWMS Processing Subsystem to provide alternate processing capability in the event of a subsystem failure, or additional processing capacity as required (Reference 11.2-11).

Process and effluent radiological monitoring systems are described in Section 11.5.

11.2.2 System Description

11.2.2.1 Summary Description

The LWMS collects, monitors, processes, stores, and disposes of potentially radioactive liquid waste collected throughout the plant.

The equipment and floor drainage systems are described in Subsection 9.3.3.

Potentially radioactive liquid wastes are collected in tanks located in the radwaste building. System components are designed and arranged in shielded enclosures to minimize exposure to plant personnel during operation, inspection, and maintenance. Tanks, processing equipment, pumps, valves, and instruments that may contain radioactivity are located in controlled access areas.

The LWMS normally operates on a batch basis. Provisions for sampling at important process points are included. Protection against accidental discharge is provided by detection and alarm of abnormal conditions and by administrative controls.

The LWMS is divided into several subsystems, so that the liquid wastes from various sources can be segregated and processed separately, based on the most economical and efficient process for each specific type of impurity and chemical content. Cross-connections between subsystems provide additional flexibility in processing the wastes by alternate methods and provide redundancy if one subsystem is inoperative.

The radwaste processing equipment is designed to meet or exceed the decontamination factors in Table 11.2-3.

11.2.2.2 System Operation

The LWMS is operated at atmospheric and greater pressures. Tanks are vented to the atmosphere via the radwaste ventilation system described in Subsection 9.4.3. No condensing vapors are housed to create a vacuum. The vent is also large enough to accommodate the airflow associated with pumping down the tank at a maximum flowrate. Therefore, no adverse conditions are expected.

The LWMS consists of the following four processing subsystems.

11.2.2.2.1 Equipment (Low Conductivity) Drain Subsystem

The equipment drain collection tanks receive low conductivity inputs from various sources within the plant. These waste inputs have a high chemical purity and are processed on a batch basis. The equipment drain subsystem consists of three collection tanks and collection pumps, a processing system featuring a filtration system, reverse osmosis, Mixed-Bed Ion Exchanger and the associated piping, instrumentation and electrical systems as required, and two sample tanks and sample pumps. Additional collection capacity is provided by cross connection to the floor drain collection tanks. Cross-connections with the floor drain subsystem allow processing through the Processing Subsystem for floor drain treatment. The equipment drain subsystem is shown on Figure 11.2-1a.

A strainer or filter is provided downstream of the last ion exchanger in series to collect crud and resin fines that may be present.

The process effluents are collected in one of the two sample tanks for chemical and radioactivity analysis. If acceptable, the tank contents are returned to the condensate storage tank for plant reuse. A recycle line from the sample tanks allows the sampled effluents that do not meet water quality requirements to be pumped back to an Equipment (Low Conductivity) Drain Collection Tank or Floor (High Conductivity) Drain Collection Tank for additional processing. If the plant condensate inventory is high, the sampled process effluent may be discharged.

PRELIMINARY

Filters are backwashed periodically to maintain capacity. Backwash waste is discharged to the Wet Solid Waste Collection Subsystem. Spent mixed-bed ion exchanger resin is either discharged to a low activity resin holdup tank as a slurry, or sent directly to a High Integrity Container (HIC).

Reverse osmosis units create a brine waste stream with a nominal value of 3 gpm based on current industry experience, which is discharged to the concentrated waste tank.

11.2.2.2.2 Floor (High Conductivity) Drain Subsystem

The floor drain collection tanks receive high conductivity waste (HCW) inputs from various floor drain sumps in the Reactor Building (RB), Turbine Building (TB), Fuel Building (FB), and Radwaste Building (RW). The floor drain collection tanks also receive waste input from the chemical drain collection tank.

The floor drain subsystem consists of two floor drain collection tanks and collection pumps, a processing system featuring a filtration system, reverse osmosis, Mixed-bed Ion Exchanger and the associated piping, instrumentation and electrical systems as required, and two sample tanks and sample pumps. The waste collected in the floor drain collection tanks is processed on a batch basis. Cross-connections with the equipment drain subsystem also allow for processing through that subsystem. The floor drain subsystem is shown on Figure 11.2-1b.

Additional collection capacity is provided by cross connection to the equipment drain collection tanks.

A strainer or filter is provided downstream of the last ion exchanger in series to collect crud and resin fines that may be present.

The floor drain sample tanks collect the process effluent, so that a sample is taken for chemical and radioactivity analysis before discharging or recycling. The discharge path depends on the water quality, dilution stream availability and plant water inventory. Off-standard quality effluent can be recycled to floor drain collection tanks or equipment drain collection tanks. If the treated effluent meets water quality standards, and if the water inventory permits it to be recycled, the processed floor drain effluent can be recycled to the condensate storage tank or discharged offsite.

The liquid waste filter sludge is periodically discharged to a low activity phase separator. Spent mixed-bed ion exchanger resin is discharged to a low activity spent resin holdup tank as slurry.

The capability exists to accept used condensate polishing resin in a condensate resin receiver tank. The used condensate polishing resin from Condensate Purification System is transferred to the condensate resin receiver tank, as described in Subsection 10.4.6.2.3, prior to use in the pre-treatment mixed-bed ion exchanger in the floor drain subsystem.

Reverse osmosis units create a brine waste stream with a nominal value of 3 gpm based on current industry experience, which is discharged to the concentrated waste tank.

PRELIMINARY

11.2.2.2.3 Chemical Drain Subsystem

To the greatest extent practicable, waste chemicals will be kept out of the LWMS, including the Chemical Drain Subsystem. The chemical waste collected in the chemical drain collection tank consists of laboratory wastes and decontamination solutions. After accumulating in the chemical drain collection tank, the tank contents are transferred to the low activity spent resin tank, detergent drain tank, or to the floor drain collection tanks. Chemical Control programs ensure that unapproved liquids are not added to chemical drain subsystem or LWMS. The chemical drain subsystem is shown in Figure 11.2-4.

11.2.2.2.4 Detergent Drain Subsystem

Waste water containing detergent from the controlled laundry and personnel decontamination facilities throughout the plant is collected in the detergent drain collection tanks. The detergent drain subsystem consists of two detergent drain collection tanks and collection pumps, a processing system (consisting of a filtration system, organic pre-treatment equipment, and the associated piping, instrumentation and electrical systems as required), and two sample tanks and sample pumps. The detergent waste treatment includes suspended solid removal processing and organic material removal processing, as necessary. The treated waste is collected in sample tanks. A sample is taken, and if discharge standards are met, the waste is discharged offsite. Off-standard quality water can either be recycled for further processing to the detergent collection tank or to the floor drain collection tank. A cross-connection with the chemical drain collection subsystem is also provided. The detergent drain subsystem is shown on Figure 11.2-3.

11.2.2.3 Detailed System Component Description

The LWMS consists of permanently installed tanks, pumps, pipes, valves, and instruments, and processing subsystems for waste processing. Processing Subsystems provide operational flexibility and maintainability to support plant operation. The major components of the LWMS are as follows below.

11.2.2.3.1 Pumps

The LWMS process pumps are constructed of materials suitable for their intended service.

Pump codes are per the noted requirements of Table 3.2-1 for K10 Liquid Waste Management Systems.

11.2.2.3.2 Tanks

Tanks are sized to accommodate the expected volumes of waste generated in the upstream systems that feed waste into the LWMS for processing. The tanks are constructed of stainless steel to provide a low corrosion rate during normal operation. The tanks are provided with mixing eductors and/or sparger nozzles. The capability exists to sample all LWMS collection and sample tanks. LWMS tanks are vented into the radwaste ventilation system. The LWMS tanks are designed in accordance with the equipment codes listed in Table 11.2-1.

All atmospheric liquid radwaste tanks are provided with an overflow connection at least the size of the largest inlet connection. The overflow is connected below the tank vent and above the high-level alarm setpoint. Each collection tank room is designed to contain the maximum liquid inventory in the event that the tank ruptures. Tank cubicles are lined with steel to preclude

PRELIMINARY

accidental releases to the environment. Concrete walls are sealed and coated for added protection. Tanks are vented to the radwaste ventilation system. The radwaste ventilation system is described in Subsection 9.4.3.

Tank codes are per the noted requirements of Table 3.2-1 for K10 Liquid Waste Management Systems.

11.2.2.3.3 Processing Systems

The Combined Operating License (COL) Applicant is responsible, initially and subsequently, for the identification of LWMS Processing Systems connections that are considered non-radioactive, but later become radioactive through interfaces with radioactive systems; i.e., a non-radioactive system becomes contaminated due to leakage, valving errors or other operating conditions in radioactive systems using the guidance and information in Inspection and Enforcement (IE) Bulletin 80-10 (May 6, 1980) (Reference 11.2-10) (COL 11.2-1-A).

The COL Applicant will include site-specific information describing how the implementation of operating procedures for the LWMS Processing Systems will address the requirements of Part 20.1406 (Reference 11.2-9) (COL 11.2-2-A). Specifically, the operational procedures and design of the LWMS Processing Systems should minimize, to the extent practicable, contamination of the facility and the environment, facilitate decommissioning, and minimize the generation of radioactive wastes. This information is placed in Subsection 12.3.1.5 and applicable references are included in Subsection 11.2.1.

The processing systems are configured for installation ease and process reconfiguration at system connections.

The LWMS Processing Systems are located in the Radwaste Building (RW) to allow truck access and processing system installation. Modular shield walls are provided in the RW to allow shield walls to be constructed to minimize exposure to personnel during operation and routine maintenance.

11.2.2.3.4 Equipment Drain RO and Mixed-Bed Demineralizer Processing Subsystem

The design of the Equipment Drain Reverse Osmosis System (RO) and Mixed-Bed Demineralizer Processing Subsystem is depicted in Figure 11.2-1. The equipment drain processing system utilizes filters for removing suspended solid and radioactive particulate material, and charcoal adsorbtion for organic material removal as necessary. Backwash operation for filtration units is performed when the differential pressure across the filter exceeds a preset limit. Filtration backwash waste is discharged to a low activity phase separator or sent directly to a High Integrity Container (HIC).

The Equipment Drain Subsystem consists of a filter for removing large particles, a carbon bed for removing organics, as required, a reverse osmosis membrane for removing submicron particulates, and mixed-bed ion exchangers for polishing dissolved ionic compounds. Exhausted resins from a mixed bed ion exchange unit are sluiced to the low activity spent resin holdup tank when an effluent purity parameter (such as conductivity) exceeds a preset limit or upon high differential pressure across the unit. Fine mesh strainers with backwashing connections are provided in the ion exchange vessel discharge and in the downstream piping to limit resin fines

PRELIMINARY

from being carried over to the sampling tanks. RO concentrates are accumulated in the Concentrated Waste Tank to facilitate processing.

The processing system is designed and configured for installation ease and process reconfiguration. In-plant supply and return connections from permanently installed equipment to the processing system are provided for operational flexibility.

11.2.2.3.5 Floor Drain RO and Mixed-Bed Demineralizer Processing Subsystem

The design of the Floor Drain RO and Mixed-Bed Demineralizer Processing Subsystem is depicted in Figure 11.2-1. The Floor Drain Subsystem consists of a filter for removing large particles, a carbon bed for removing organics, as required, a reverse osmosis membrane for removing submicron particulates, and mixed-bed ion exchangers for polishing dissolved ionic compounds.

Exhausted ion exchange resins may be sluiced to the spent resin tank when a chemistry parameter (such as conductivity) exceeds a preset limit or upon high differential pressure. Fine mesh strainers with backwashing connections are provided in the ion exchange vessel discharge and in the downstream piping to limit resin fines from being carried over to the sampling tanks. RO concentrates are accumulated in the Concentrated Waste Tank to facilitate processing.

The processing system is configured for installation ease and process reconfiguration. In-plant supply and return connections from other radwaste equipment to the processing system are provided to ensure operational flexibility.

11.2.2.3.6 Detergent Drain Pre-Filter and Charcoal Filter Processing Subsystem

The design of the Detergent Drain Pre-Filter and Charcoal Filter Processing Subsystem is depicted in Figure 11.2-1. The Detergent Drain Processing Subsystem can utilize organic pretreatment to remove organics and a filter to remove suspended solids. When the differential pressure of the filter exceeds a preset value, the filter performance is rejuvenated in accordance with the design of the filter. Spent filter media are packaged as solid waste.

11.2.3 Safety Evaluation - Radioactive Releases

11.2.3.1 Safety Evaluation

The LWMS has no safety-related function. Failure of the system does not compromise any safety-related system or component nor does it prevent shutdown of the plant. No interface with the Class IE electrical system exists.

11.2.3.2 Radioactive Releases

During liquid processing by the LWMS, radioactive contaminants are removed and the bulk of the liquid is purified and either returned to the condensate storage tank or discharged to the environment. The radioactivity removed from the liquid waste is concentrated on filter media, RO membrane, ion exchange resins, and concentrated waste. The decontamination factors (DFs) that are listed in Table 11.2-3 and Table 12.2-19a are in accordance with NUREG-0016 (Reference 11.2-7), but are considered conservative values. The filter sludge, ion exchange resins and concentrated waste are sent to the Solid Waste Management System (SWMS) for further processing. Liquid samples are collected using the processing sampling system described

in Subsection 9.3.2. If the liquid meets the purity requirements it is returned to the plant for condensate makeup. If the liquid is discharged, the activity concentration is consistent with the discharge criteria of 10 CFR 20 Appendix B (Reference 11.2-2) and dose commitment in 10 CFR 50, Appendix I (Reference 11.2-6).

All radioactive releases will be discharged to the circulating water system. Prior to discharging to the environment, the contents of the tank being released are sampled and analyzed to ensure that the activity concentration is consistent with the discharge criteria of 10 CFR 20 (Reference 11.2-2) and dose commitment in 10 CFR 50, Appendix I (Reference 11.2-6). A radiation monitor provides an automatic closure signal to the discharge line isolation valve.

The parameters and assumptions used to calculate releases of radioactive materials in liquid effluents and their bases are provided in Chapter 12. The LWMS design ensures that calculated individual doses from the release of radioactive liquid effluents during normal operation and anticipated operational occurrence is less than 0.03 mSv (3 mrem) to the whole body and 0.1 mSv (10 mrem) to any organ to meet the requirements of 10 CFR 20 Appendix B and 10 CFR 50 Appendix I (References 11.2-2 and 11.2-6).

Expected releases of radioactive materials by radionuclides in liquid effluents resulting from normal operation, including anticipated operational occurrences, and from design basis fuel leakage are provided in Chapter 12.

An assessment of potential radiological liquid releases following a postulated failure of a LWMS tank and its components, in accordance with Branch Technical Position (BTP) 11-6 (Reference 11.2-11), is provided in Subsection 15.3.16.

A tabulation of the releases by radionuclides can be found in Chapter 12. The tabulation includes the total system and each subsystem, and indication of the effluent concentrations. The calculated concentrations in the effluents are within the concentration limits of 10 CFR 20 (Reference 11.2-2). The doses resulting from the effluents are within the numerical design objectives of Appendix I to 10 CFR 50 (Reference 11.2-6) and the dose limits of 10 CFR 20 (Reference 11.2-2) as set forth in Chapter 12.

11.2.3.3 Dilution Factors

Refer to Section 12.2 for dilution factors used in evaluating the release of liquid effluents.

11.2.4 Testing and Inspection Requirements

LWMS inspection and testing requirements are identified in Table 11.2-1. A pre-operational test is performed on the LWMS as discussed in Chapter 14. Thereafter, portions of the systems are tested as needed.

During initial testing of the system, the pumps and processing systems are performance tested to demonstrate conformance with design flows and processing performance specifications. A leak integrity test is performed on the system upon completion.

Provisions are made for periodic inspection of major components to ensure capability and integrity of the systems. Process display devices are provided to indicate vital parameters required in routine testing and inspection.

PRELIMINARY

The demineralizers are procured with a certain capability to remove ionic species and impurities to meet requirements in NRC Regulations 10 CFR Part 20 and 10 CFR Part 50, Appendix I, to ensure that the decontamination factors for effluent releases do not exceed regulatory limits (Table 11.2-3). Thus, an inspection of the amount of filtration and demineralizer media will be conducted to verify that the loading meets the vendor recommended loading for the demineralizer capabilities as specified in the vendor material, such as a vendor manual, for the equipment.

Replacement filters, charcoal, and resins will be purchased to meet performance standards which support overall system decontamination factors listed in Table 11.2-3.

The quality assurance program for design, fabrication, procurement, and installation of the liquid radioactive waste system is in accordance with the overall quality assurance program described in Chapter 17.

11.2.5 Instrumentation Requirements

The LWMS is operated and monitored from the Radwaste Building Control Room (RWBCR). Major system parameters, i.e., tank levels, process flow rates, filter and ion exchanger differential pressure, ion exchanger effluent conductivity, etc., are indicated and alarmed as required to provide operational information and performance assessment. A continuous radiation detector, as described in Subsection 11.5.3.2.5, is provided to monitor the discharge of radioactivity to the environs. Key system alarms are repeated in the main control room.

11.2.6 COL Information

11.2-1-A Implementation of IE Bulletin 80-10

The COL Applicant is responsible, initially and subsequently, for the identification of LWMS Processing System connections that are considered non-radioactive, but later become radioactive through interfaces with radioactive systems; i.e., a non-radioactive system becomes contaminated due to leakage, valving errors or other operating conditions in radioactive systems using the guidance and information in IE Bulletin 80-10 (May 6, 1980) (Reference 11.2-10) (Subsection 11.2.2.3.3).

11.2-2-A Implementation of Part 20.1406

The COL Applicant will include site-specific information describing how the implementation of operating procedures for the LWMS Processing System will address the requirements of Part 20.1406 (Reference 11.2-9) (Subsection 11.2.2.3.3).

11.2.7 References

11.2-1 Nuclear Regulatory Commission, Regulatory Guide 1.143, "Design Guidance for Radioactive Waste Management Systems, Structures, and Components Installed in Light-Water-Cooled Nuclear Power Plants," Revision 2, November 2001.

11.2-2 Title 10 Code of Federal Regulations Part 20 Appendix B, "Annual Limits on Intake (ALIs) and Derived Air Concentrations (DACs) of Radionuclides for Occupational Exposure; Effluent Concentrates; Concentrations for Release to Sewage."

11.2-3 Title 10 Code of Federal Regulations Part 50.34a "Design Objectives for Equipment to Control Releases of Radioactive Material in Effluents – Nuclear Power Reactors," and Part 52.47 "Contents of Applications; technical information."

11.2-4 Title 10 Code of Federal Regulations Part 50, Appendix A, General Design Criterion 60, "Control of Releases of Radioactive Materials to the Environment."

11.2-5 Nuclear Regulatory Commission, Regulatory Guide 8.8, "Information Relevant to Ensuring that Occupational Radiation Exposures at Nuclear Power Stations Will Be as Low as Is Reasonably Achievable," Revision 3, June 1978.

11.2-6 Title 10 Code of Federal Regulations Part 50, Appendix I, "Numerical Guides for Design Objectives and Limiting Conditions for Operation to Meet the Criterion "As Low as is Reasonably Achievable" for Radioactive Material in Light-Water-Cooled Nuclear Power Reactor Effluents."

11.2-7 Nuclear Regulatory Commission, "Calculation of Releases of Radioactive Materials in Gaseous and Liquid Effluents from Boiling Water Reactors," NUREG-0016, Revision 1, January 1979.

11.2-8 (Deleted)

11.2-9 Title 10 Code of Federal Regulations, Part 20.1406 "Minimization of Contamination."

11.2-10 Inspection and Enforcement (IE) Bulletin 80-10, "Contamination of Nonradioactive System and Resulting Potential for Unmonitored, Uncontrolled Release to Environment," May 6, 1980.

11.2-11 NUREG-0800, Standard Review Plan, "For the Review of Safety Analysis Reports for Nuclear Power Plants," Branch Technical Position 11-6, "Postulated Radioactive Releases Due to Liquid-Containing Tank Failures," March 2007.

11.2-12 ANSI/ANS-55.6-1993 (R1999), "Liquid Radioactive Waste Processing System for Light Water Reactors."

PRELIMINARY

Table 11.2-1

Equipment Codes (from Table 1, RG 1.143)

Component	Design and Construction	Materials[1]	Welding	Inspection and Testing
Pressure Vessels and Tanks (>15 psig)	ASME Boiler and Pressure Vessel Code (BPVC) Div.1 or Div.2	ASME Code Section II	ASME Code Section IX	ASME Code Section VIII, Div.1 or Div.2
Atmospheric Tanks[7]	API 650	ASME Code Section II	ASME Code Section IX	API 650
0-15 psig Tanks[7]	API 620	ASME Code Section II	ASME Code Section IX	API 620
Heat Exchangers	TEMA STD, 8th Edition; ASME BPVC Section VIII, Div.1 or Div.2	ASTM B359-98 or ASME Code Section II	ASME Code Section IX	ASME Code Section VIII, Div.1or Div.2
Piping and Valves	ANSI/ASME B31.3[4 and 5]	ASME Code Section II[6]	ASME Code Section IX	ANSI/ASME B31.3
Pumps	API 610; API 674; API 675; ASME BPVC Section VIII, Div.1 or Div.2	ASTM A571-84 (1997) or ASME Code Section II[6]	ASME Code Section IX	ASME Code[2] Section III, Class 3
Flexible Hoses and Hose Connections for RWP[3]	ANSI/ANS-40.37	ANSI/ANS-40.37	ANSI/ANS-40.37	ANSI/ANS-40.37

Notes:
1. Manufacturer's material certificates of compliance with material specifications may be provided in lieu of certified material test reports as discussed in Regulatory Position 1.1.2 of Regulatory Guide 1.143.
2. ASME Code stamp, material traceability, and the quality assurance criteria of ASME BPVC, Section III, Div.1, Article NCA are not required. Therefore, these components are not classified as ASME Code Section III, Class 3.
3. Flexible Hoses should only be used in conjunction with Radwaste Processing Systems (RWP).
4. Class RW-IIa and RW-IIb Piping Systems are to be designed as category "M" systems.
5. Classes RW-IIa, RW-IIb and RW-IIc are discussed in Regulatory Position 5 of Regulatory Guide 1.143.
6. ASME BPVC Section II required for Pressure Retaining Components.
7. Per Regulatory Guide 1.143, tank design and fabrication are in accordance with ASME BPVC Div. 1 or Div. 2; API 620; API 650 or American Water Works Association (AWWA) D-100, depending on design requirements.

PRELIMINARY

Table 11.2-2a

LWMS Component Capacity (Tanks)*

Component	Type**	Quantity	Nominal Capacity*** Liter (Gal) per Tank
Equipment Drain Collection Tanks	Vertical, Cylindrical	3	140,000 (36,988)
Equipment Drain Sample Tanks	Vertical, Cylindrical	2	140,000 (36,988)
Floor Drain Collection Tanks	Vertical, Cylindrical	2	130,000 (34,346)
Floor Drain Sample Tanks	Vertical, Cylindrical	2	130,000 (34,346)
Chemical Drain Collection Tank	Vertical, Cylindrical	1	4,000 (1,057)
Detergent Drain Collection Tanks	Vertical, Cylindrical	2	15,000 (3,963)
Detergent Drain Sample Tanks	Vertical, Cylindrical	2	15,000 (3,963)

* Per RG 1.143, all materials are in accordance of ASME Section II.
** Per RG 1.143, tank design and fabrication are in accordance with ASME BPVC Div. 1 or Div. 2; API 620; API 650 or AWWA D-100, depending on design requirements.
*** Nominal capacity refers to the total tank capacity.

PRELIMINARY

Table 11.2-2b

LWMS Component Capacity (Pumps)

Component	Type	Quantity	Minimum Capacity Liters/Hour (gpm)
Equipment Drain Collection Pumps	Horizontal, Centrifugal	3	60,000 (264)
Equipment Drain Sample Pumps	Horizontal, Centrifugal	2	60,000 (264)
Floor Drain Collection Pumps	Horizontal, Centrifugal	2	55,000 (242)
Floor Drain Sample Pumps	Horizontal, Centrifugal	2	55,000 (242)
Chemical Drain Collection Pumps	Horizontal, Centrifugal	2	6,000 (26.4)
Detergent Drain Collection Pumps	Horizontal, Centrifugal	2	12,000 (52.8)
Detergent Drain Sample Pumps	Horizontal, Centrifugal	2	12,000 (52.8)

PRELIMINARY

Table 11.2-2c

LWMS Component Capacity

Component*	Type	Quantity**	Nominal Cap.***
Equipment Drain Processing Subsystem		1	20,000L/h (88gpm)
Equipment Drain Charcoal Filter	Charcoal Filter or others		
Equipment Drain Pre-filter	Cartridge Type		
Equipment Drain Filter	Reverse Osmosis (RO)		
Equipment Drain Ion Exchangers	Mixed Bed Type		
Equipment Drain Intermediate Pump Resin Trap	Horizontal, Centrifugal Basket Type		
Floor Drain Processing Subsystem		1	15,000L/h (66gpm)
Floor Drain Charcoal Filter	Charcoal Filter or Others		
Floor Drain Pre-Filters	Cartridge Type		
Floor Drain Filter	Reverse Osmosis (RO)		
Floor Drain Ion Exchangers	Mixed Bed Type		
Floor Drain Intermediate Pump Resin Trap	Horizontal, Centrifugal Basket Type		
Detergent Drain Processing Subsystem		1	2,000L/h (8.8gpm)
Detergent Drain Organic Pre-Treatment	Charcoal Filter or others		
Detergent Drain Pre-Filter	Cartridge Type		
Detergent Drain Charcoal Filter	Charcoal Filter		

* Typical components are shown for each processing subsystem.
** This column shows quantities for each subsystem.
*** Flows are nominal values. Actual rates will vary depending upon filter loading.

PRELIMINARY

Table 11.2-3

Decontamination Factors***

Subsystems*	Filter	Reverse Osmosis	Ion-Exchanger	Total DF
Equipment (low conductivity) Drain Subsystem:				
Halogens	1	10	100 (10)**	10,000
Cs, Rb	1	10	10 (10)**	1,000
Other nuclides	1	10	100 (10)**	10,000
Floor (high conductivity) Drain Subsystem:				
Halogens	1	10	100 (10)**	10,000
Cs, Rb	1	10	2 (10)**	200
Other nuclides	1	10	100 (10)**	10,000
A DF of 1 is used for tritium.				
Chemical Drain Subsystem: Chemical drain is processed in Floor Drain Subsystem.				
Detergent Drain Subsystem: A DF of 1 is used for the detergent drain filter for all radionuclides.				

* From NUREG-0016 Revision 1, Table 1-5.

** ANSI 55.6 (Reference 11.2-12) for two demineralizers in series, the second demineralizer has a decontaminator factor of 10.

*** Radwaste processing equipment is designed to meet or exceed these decontamination factors.

PRELIMINARY

Table 11.2-4

Probable Inputs to LWMS from Operational Occurrences

Subsystem	Normal Liters/Day (Gal/Day)	Maximum Liters/Day (Gal/Day)	Time Needed to Process Maximum Input (Hr)
Equipment (low conductivity) Drain Subsystem	65,007 (17,173)	125,000 (33,025)	6.3
Floor (high conductivity) Drain Subsystem	25,551 (6,750)	100,000 (26,420)	6.7
Chemical Drain Subsystem	3,000 (793)	3,000 (793)	0.2
Detergent Drain Subsystem	4,001 (1,057)	12,000 (3,170)	6.0

PRELIMINARY

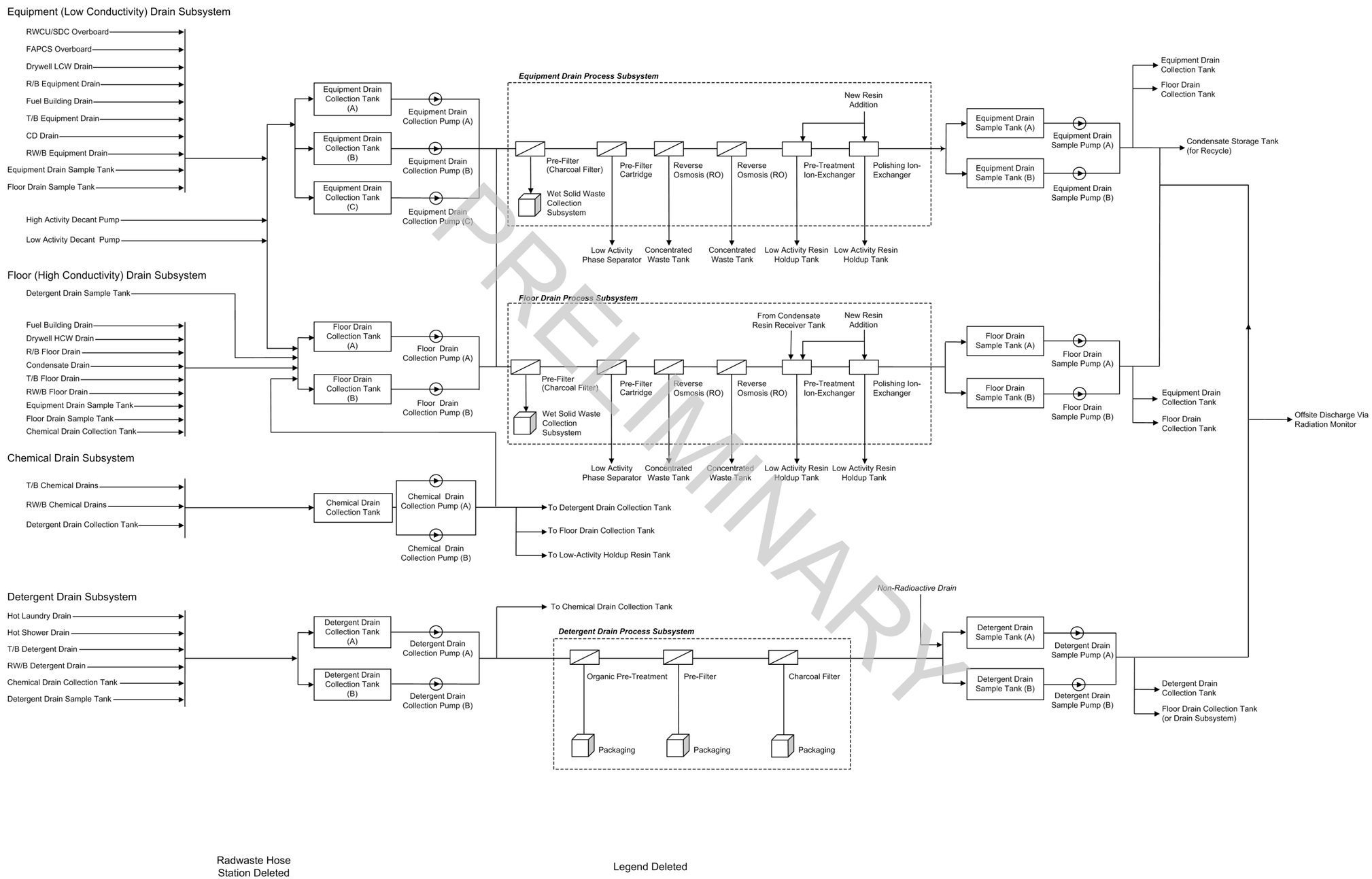

Figure 11.2-1. Liquid Waste Management System Processing Diagram

PRELIMINARY

PRELIMINARY

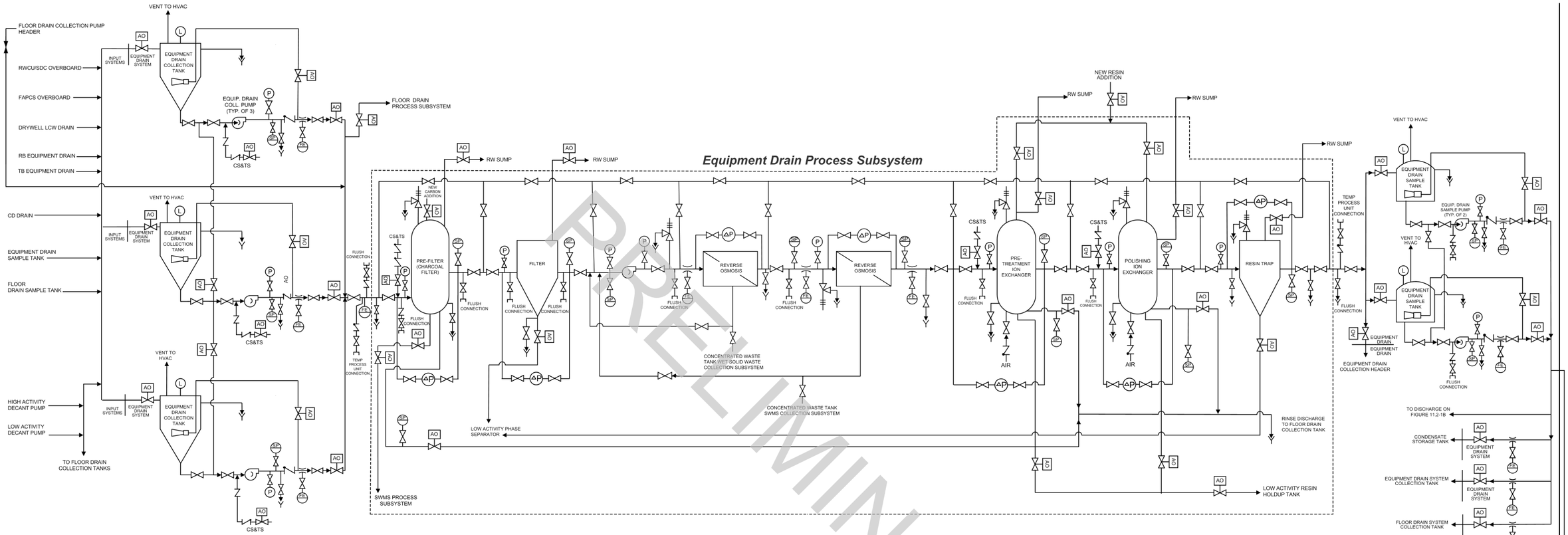

Figure 11.2-1a. Equipment Drain

PRELIMINARY

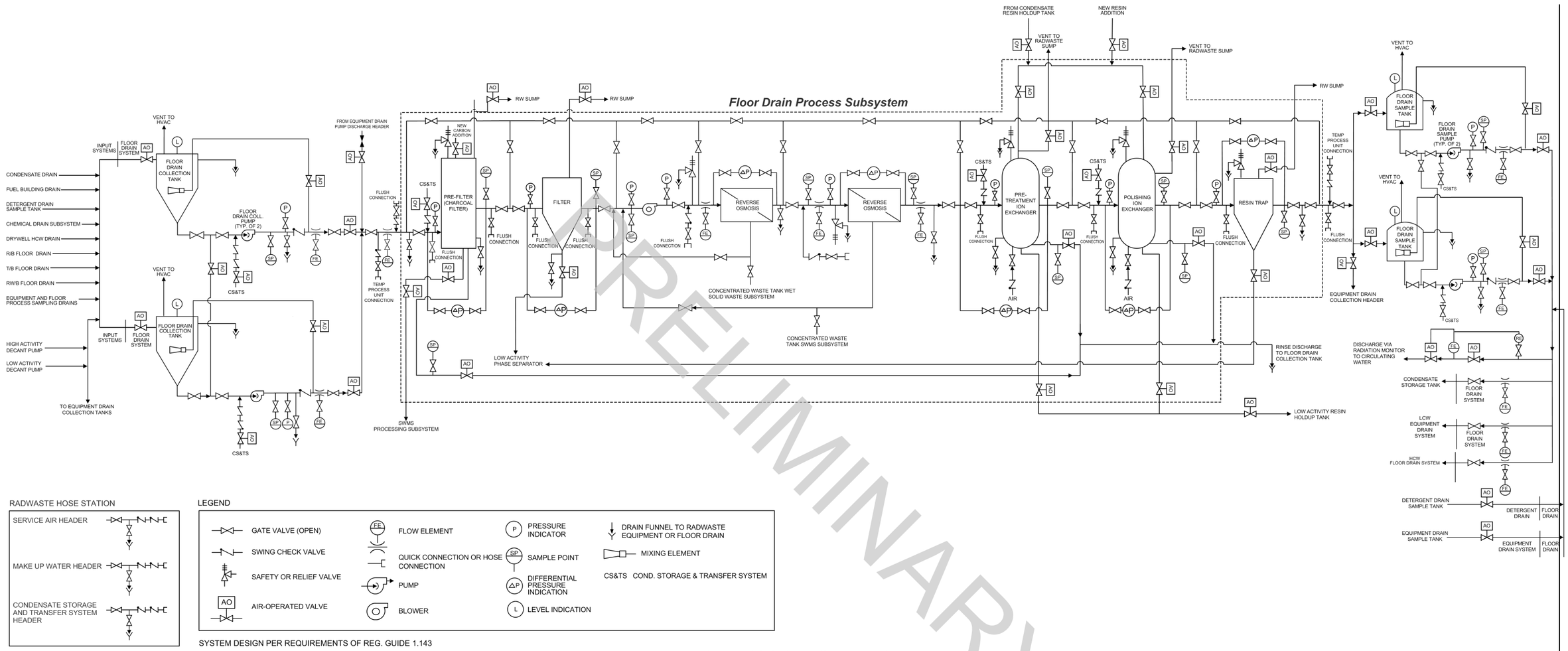

Figure 11.2-1b. Floor Drain

PRELIMINARY

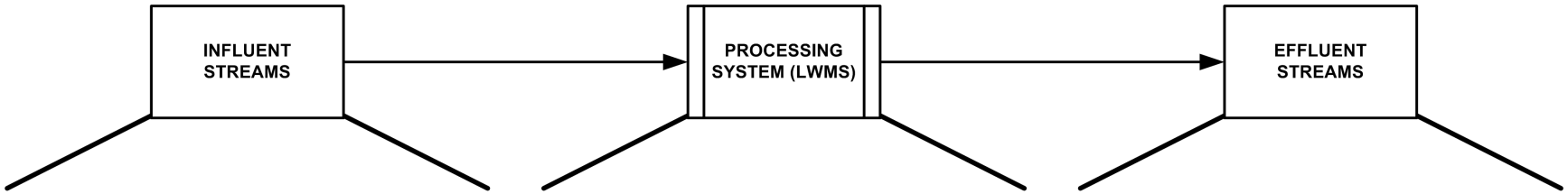

Influent Stream	Text Description	Applicable Drawing
RWCU/SDC Overboard	Subsection 5.4.8.1.2	Figure 5.1-4
FAPCS Overboard	Subsection 5.4.8.1.2	Figure 9.1-1
Drywell LCW Drain	Subsection 5.2.5.2.1	—
Drywell HCW Drain	Subsection 5.2.5.2.1	—
RB Drain	Subsection 9.3.3 & Table 9.3-2	Figure 1.2-1
TB Drain	Subsection 9.3.3 & Table 9.3-2	Figure 1.2-12
RW/B Drain	Subsection 9.3.3 & Table 9.3-2	Figure 1.2-21
CD Drain	Subsection 9.2.6.1	—
LWMS	Subsection 11.2	Figure 11.2-1

Processing System	Text Description	Applicable Drawing
LWMS	Subsection 11.2	Figure 11.2-1

Effluent Stream	Text Description	Applicable Drawing
LWMS	Subsection 11.2	Figure 11.2-1
CSTS	Subsection 9.2.6.2	—
Offsite Discharge	Subsection 11.2.3	Figure 11.2-1

Abbreviations:

RWCU/SDC - - - - Reactor Water Cleanup/Shutdown Cooling System
FAPCS - - - - - - - Fuel and Auxiliary Pools Cooling System
LCW - - - - - - - - - Low Conductivity Waste
HCW - - - - - - - - - High Conductivity Waste
CD - - - - - - - - - - Condensate Demineralizer
LWMS - - - - - - - - Liquid Waste Management System
CSTS - - - - - - - - Condensate Storage and Transfer System

PRELIMINARY

Figure 11.2-2. Liquid Waste Management System Processing Stream Information Directory

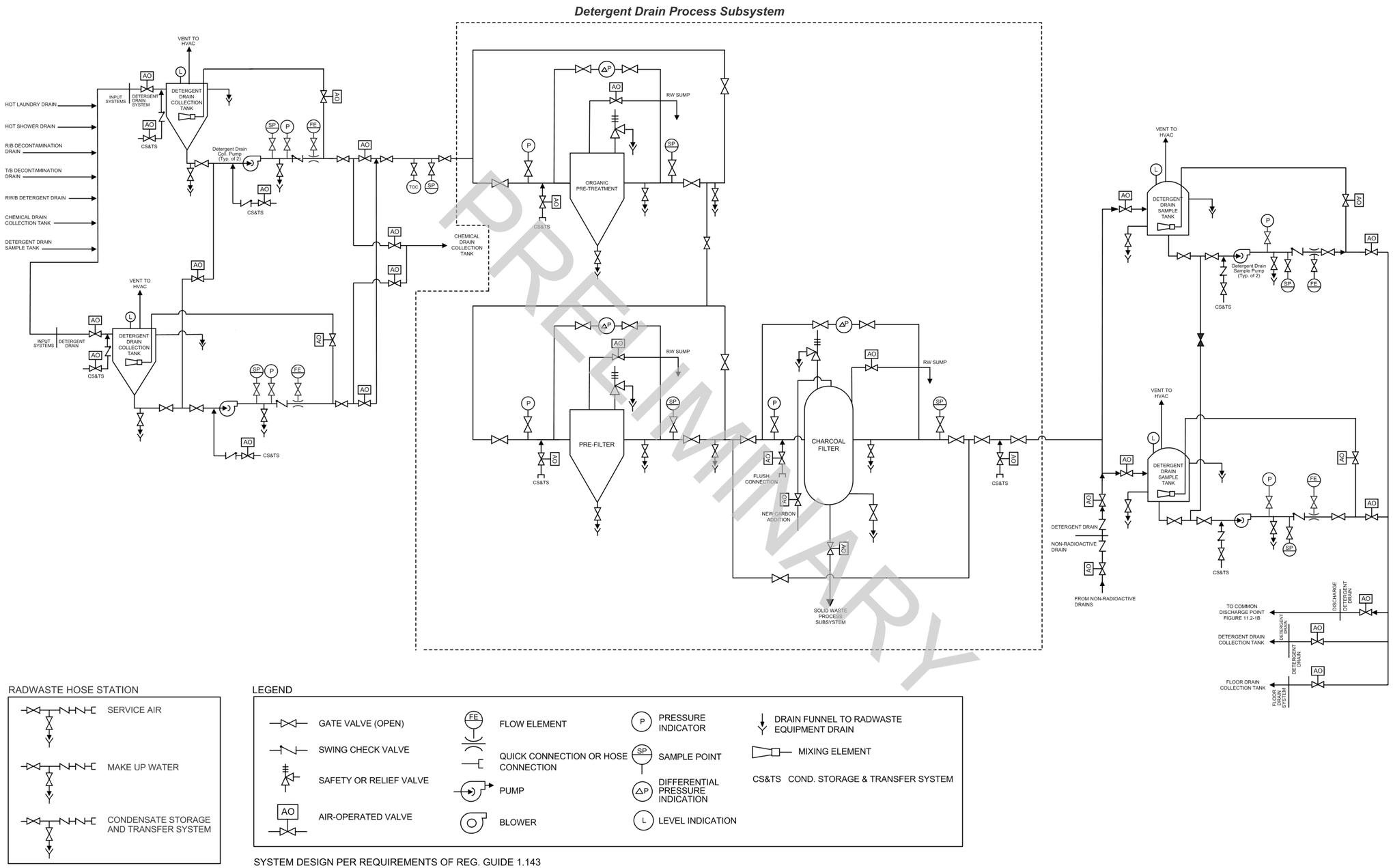

Figure 11.2-3. Detergent Drain

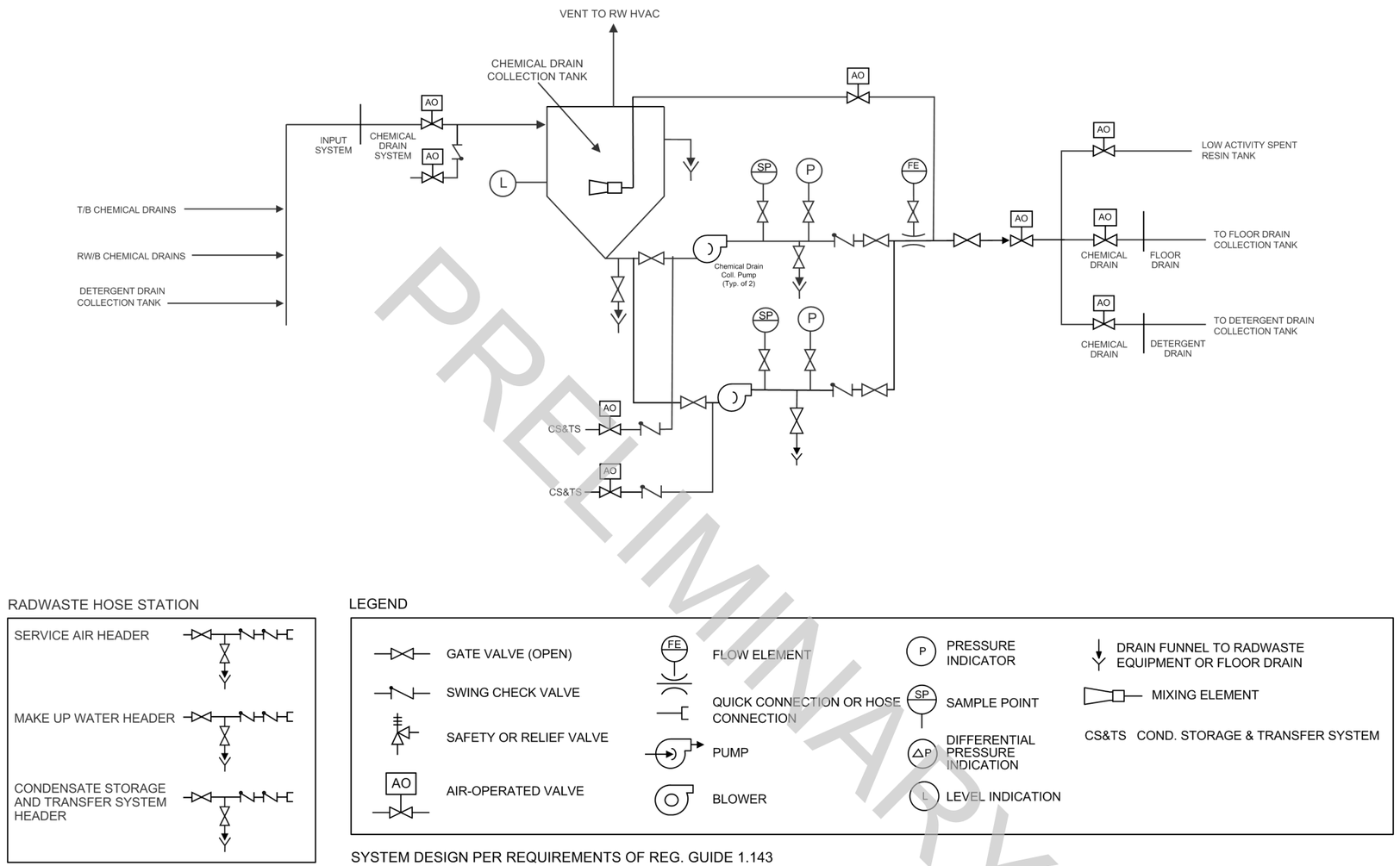

Figure 11.2-4. Chemical Drain

PRELIMINARY

11.3 GASEOUS WASTE MANAGEMENT SYSTEM

11.3.1 Design Bases

The objective of the gaseous waste management system is to process and control the release of gaseous radioactive effluents to the environs so as to maintain the exposure of persons in unrestricted areas to radioactive gaseous effluents as low as reasonably achievable according to 10 CFR 50, Appendix I (Reference 11.3-1), 10 CFR 20, Appendix B Table 2 effluent concentration limits (Reference 11.3-2), 10 CFR 50.34a (Reference 11.3-20) and 10 CFR 52.47 (Reference 11.3-20). This is accomplished while maintaining occupational exposure as low as reasonably achievable without limiting plant operation or availability.

The two main sources of plant gaseous radioactive effluents are the building ventilation systems, which are discussed in Section 9.4, and the power cycle Offgas System (OGS) that is described and reviewed in this section.

The OGS provides for holdup, and thereby, decay of radioactive gases in the offgas from the main condenser air removal system (Subsection 10.4.2), and consists of process equipment along with monitoring instrumentation and control components.

The OGS minimizes and controls the release of radioactive material into the atmosphere by delaying release of the offgas process stream initially containing radioactive isotopes of krypton, xenon, iodine, nitrogen, and oxygen. This delay, using activated charcoal adsorber beds, is sufficient to achieve adequate decay before the process offgas stream is discharged from the plant.

The OGS design minimizes the explosion potential in the OGS through recombination of radiolytic hydrogen and oxygen under controlled conditions as required by GDC 3 (Reference 11.3-19). Additional GDC 3 requirements are addressed in Subsection 9.5.1, Appendix 9A and Appendix 9B.

The gaseous effluent treatment systems are designed to limit the dose to offsite persons from routine station releases to significantly less than the limits specified in 10 CFR 20 (Reference 11.3-2), and to operate within the relevant limits specified in the plant-specific Technical Specifications (TS).

As a conservative design basis for the OGS, an average annual noble radiogas source term (based on 30 minute decay) is assumed. The OGS System Design Parameters are shown in Table 11.3-1. The system is mechanically capable of processing three times the source term without affecting delay time of the noble gases. Table 11.3-5 lists the isotopic distribution at t = 0. Table 11.3-1 shows the xenon time delays with an assumed air in-leakage.

Design guidelines described in Branch Technical Position (BTP) - Effluent Treatment Systems Branch (ETSB) 11-5 (Reference 11.3-18) minimize radiation and radiological consequences due to a single failure of an active component were considered in the design of the OGS.

Using the isotopic activities at the discharge of the OGS, the DF for each noble gas isotope can be determined. Section 11.1 presents source terms for normal operational and anticipated occurrence releases to the primary coolant. Tables in this section, if not designated otherwise, are based upon a design basis annual average offgas release rate (measured after 30 minutes decay from the core) of noble gases and as shown in Table 11.3-1. For normal expected

PRELIMINARY

conditions, the leak rates and doses are expected to be less than one-fifth of the design basis numbers.

The average annual exposure at the site boundary during normal operation from all gaseous sources does not exceed the dose objectives of 10 CFR 50, Appendix I (Reference 11.3-1), to individuals in unrestricted areas (Section 12.2). The radiation dose design basis for the treated offgas is to provide sufficient holdup until the required fraction of the radionuclides has decayed, and the daughter products are retained by the charcoal.

The gaseous waste management system equipment is selected, arranged, and shielded to maintain occupational exposure as low as reasonably achievable in accordance with NRC RG 8.8 (Reference 11.3-14).

The gaseous waste management system is designed to the requirements of the GDC 60 (Reference 11.3-15) and 64 (Reference 11.3-16).

A list of the OGS major equipment items, including materials, rates, process conditions, number of units supplied, and relevant design codes, is provided in Table 11.3-2.

The OGS is also designed to the requirements indicated in DCD Section 3.2.

In accordance with IE Bulletin 80-10, May 6, 1980, (Reference 11.3-13), the OGS interconnections between plant systems are designed to minimize the contamination of non-radioactive systems and uncontrolled releases of radioactivity in the environment.

OGS compliance with 10 CFR 20.1406 (Reference 11.3-17) is described in Subsection 12.3.1.5.

11.3.2 Offgas System Description

11.3.2.1 Process Functions

Major process functions of the OGS include the following:

- Recombination of radiolytic hydrogen and oxygen into water to reduce the gas volume to be treated and the explosion potential in downstream process components;
- Two-stage condensation of bulk water vapor first using condensate and then chilled water as the coolant reducing the gaseous waste stream temperature to the value shown in Table 11.3-1;
- Dynamic adsorption of krypton and xenon isotopes on charcoal at the approximate temperature shown in Table 11.3-1;
- Monitoring of offgas radioactivity levels and hydrogen gas content;
- Release of processed offgas to the atmosphere; and
- Discharge of liquids to the condenser and/or LWMS.

Samples of the offgas system are collected using the process sample system described in Subsection 9.3.2.

PRELIMINARY

11.3.2.2 Process Equipment

Major process equipment of the OGS consists of the following:

- OGS Preheaters;
- Catalytic Recombiners;
- OGS Condensers;
- Cooler condensers;
- Dryers;
- Activated charcoal adsorbers;
- Monitoring instrumentation; and
- Process instrumentation and controls.

11.3.2.3 Process Facility

The OGS process equipment is housed in a reinforced-concrete structure adjacent to the Main Turbine Condenser in the Turbine building to minimize piping.

Two trains, consisting of a Steam Jet Air Ejector set (Subsection 10.4.2) and an OGS Recombiner train, are housed in each of two separate rooms. The OGS Recombiner train consists of the preheater, recombiner, cooler and cooler/condenser. This arrangement provides for 100% redundancy and shielding between each train such that while one train is in service, the idled train is available for maintenance.

The refrigerant dryers are located in separate rooms which are adjacent to the Charcoal Adsorber Tank vault.

The Charcoal Adsorber Tanks are located in an adjacent vault that is temperature monitored and controlled. Operation of these passive tanks requires a minimum of maintenance by personnel within the enclosure. Changes in flow pathways are controlled remotely by operations personnel.

Effluent from the Charcoal Adsorber Tanks passes through the Turbine Building HVAC (Subsection 9.4.4) and exhausts via the Turbine Building Vent Stack, which is a controlled and monitored release point.

OGS monitoring instrumentation are located in separate rooms adjacent to the dryer rooms. All controls, status, alarms and indications required for system operation are located in the main control room.

11.3.2.4 Releases

The significant gaseous wastes discharged to the OGS during normal plant operation are radiolytic hydrogen and oxygen, power cycle injected gasses and air in-leakage, and radioactive isotopes of krypton, xenon, iodine, nitrogen, and oxygen. The radiation dose from gaseous discharge is primarily external, rather than ingestion or inhalation. When releasing gases from the plant, the plume or cloud is the source of radiation to the ground. The maximum radiation corresponds to the zone of maximum ground concentration. This, in turn, is a function of wind

velocity and direction, the presence of building obstructions in the wake and other meteorological conditions in the area. As indicated in DCD Subsection 12.2.2.2 and Table 12.2-17, releases from the turbine building exhaust ventilation stack do not exceed the maximum permissible concentration to the environment.

Radioactive particles are present as a result of radioactive decay from the noble gas parents. These particulates are removed from the offgas stream by the condensation and adsorption equipment. Therefore, the release of radioactive particulates are minimized from the OGS to the turbine building exhaust ventilation stack.

Radioiodines (notably I-131) may be present in significant quantities in the reactor steam and to some extent carried over through the condensation stages of the OGS. Adsorption of iodine takes place in the passage of process gas through the activated charcoal adsorbers, so that essentially no iodine is released from the OGS to the turbine building exhaust ventilation stack.

The criterion for release of gaseous wastes to the atmosphere, excluding accident sequences, is that maximum external radiation dosage to the environment be maintained below the maximum dose objectives of Appendix I to 10 CFR 50 (Reference 11.3-1) in terms for doses to individuals in unrestricted areas. An instantaneous release rate, established by 10 CFR 20 (Reference 11.3-2), of several times the annual average permissible release rate limit is permitted as long as the annual average is not exceeded. Every reasonable effort has been made to keep radiation exposures and release of radioactive materials "as low as reasonably achievable" (ALARA). The OGS discharge is routed to the turbine building exhaust ventilation stack.

11.3.2.5 Process Design

Primary design features are shown on the simplified offgas diagram (Figure 11.3-1).

The Steam Jet Air Ejectors (SJAE) are described in Subsection 10.4.2.

11.3.2.5.1 Preheating

Preheaters heat gases to provide for efficient catalytic recombiner operation and to ensure the absence of liquid water that suppresses the activity of the recombiner catalyst. Maximum preheater temperature does not exceed the value shown in Table 11.3-1 should gas flow be reduced or stopped. This is accomplished by using steam from the Turbine Auxiliary Steam System (TASS). During startup, steam at TASS pressure, is available before the process offgas is routed through the preheater to the catalytic recombiner. Electrical preheaters are not exposed directly to the offgas. Each preheater connects to an independent final stage air ejector to permit separate steam heating of both catalytic recombiners during startup or drying one catalytic recombiner while the other is in operation. For reliability, preheater steam is TASS steam. The preheater is sized to handle a dilution steam load of 115% of rated flow in addition to allowing for 5% plugged tubes.

11.3.2.5.2 Hydrogen/Oxygen Recombination

Minimum performance criteria for the catalytic recombiners are as follows:

- In normal full power operation, the hydrogen in the recombiner effluent does not exceed 0.1% by volume on a moisture-free basis, at the defined minimum air flow shown in Table 11.3-1.

- During startup or other reduced power operations (between 1 and 50% of reactor rated power), the hydrogen in the recombiner effluent does not exceed 1.0% by volume on a moisture free basis at the defined minimum air flow.
- An intentional air bleed equal to minimum air flow is introduced into the system upstream of the operating recombiner when the turbine condenser air in-leakage falls below the defined minimum air flow. The out-of-service recombiner catalysts is heated to the value shown in Table 11.3-1 by dilution steam injection and preheat steam before admitting process gas (containing hydrogen) to the recombiner. Three temperature-sensing elements are provided in each catalyst bed and are located to measure the temperature profile from inlet to outlet.

11.3.2.5.3 Condensing

The offgas condensers cool the recombiner effluent gas to the maximum temperatures shown in Table 11.3-1 for normal operation and startup operation. The condenser includes baffles to reduce moisture entrainment in the offgas. The unit is sized to handle a dilution steam load of 115% of rated flow, in addition to allowing for 5% plugged tubes. The drain line is capable of draining the entire process condensate, including the 15% excess plus 2.5 l/s (40 gpm), from the unit at both startup and normal operating conditions, taking into account the possibility of condensate flashing in the return line to the main condenser. The drain line also incorporates a flow element so that higher flows caused by tube leakage can be identified, and a passive loop seal with a block valve operable from the main control room. A gas sample tap is provided downstream of and near the offgas condensers to permit gas sampling.

The gaseous waste stream is further cooled in the cooler condenser. The cooler condenser is designed to remove condensed moisture by draining it to the offgas condenser.

11.3.2.5.4 Drying

The dew point of the offgas, from the cooler condenser, is reduced to less than 7°C (45°F) to enhance the adsorption performance of the charcoal in one of two redundant parallel dryers. Refrigerant cycle dryers will be utilized to minimize maintenance and eliminate waste production generated with desiccant dryers.

11.3.2.5.5 Adsorption

The activated charcoal uses general adsorption coefficient Karb values for krypton and xenon. Separate Karb laboratory determinations of krypton and xenon are made for each manufacturer's lot unless the manufacturer can supply convincing proof to the purchaser that other lots of the same production run immediately adjacent to the lot tested are equivalent to the lot tested with respect to krypton and xenon adsorption. Other adsorption tests (e.g., dynamic coefficients) may be acceptable, provided their equivalence to Karb tests for this purpose can be demonstrated. Charcoal particle size, moisture content and minimum charcoal ignition temperature in air are shown in Table 11.3-1.

Properties of activated charcoal used in the adsorber vessels are an optimization of the following:

- High adsorption for krypton and xenon,
- High physical stability,

- High surface area,
- Low pressure drop,
- Low moisture absorption,
- High ignition temperature, and
- Dust-free structure.

The Kr and Xe holdup time is closely approximated by the following equation:

$$t = \frac{K_d M}{V} \tag{11.3-1}$$

Where:

t	=	holdup time of a given gas
K_d	=	dynamic adsorption coefficient for the given gas
M	=	weight of charcoal
V	=	flow rate of the carrier gas

in consistent units.

Dynamic adsorption coefficient values for xenon and krypton were reported by Browning (Reference 11.3-7). GEH has performed pilot plant tests at the Vallecitos Laboratory and the results were reported at the 12th Atomic Energy Commission (AEC) Air Cleaning Conference (Reference 11.3-8).

11.3.2.5.6 Noble Gas Mixture

The fission product noble gas composition used as the nominal design basis is defined in Section 11.1. During normal operation with no fuel leaks, release rate of noble gases (after 30 minute decay) may occur because of minute quantities of uranium contamination. The system is also capable of safe operation at release rates that may occur in the event of gross fuel failures.

11.3.2.5.7 Air Supply

The air in-leakage design basis is conservatively assumed to be the total value shown in Table 11.3-1.

An air bleed supply is provided for dilution of residual hydrogen at air in-leakages below the minimum value shown in Table 11.3-1, for valve stem sealing, for recombiner startup, for blocking during maintenance, for instrument operation, for providing an air flow through the standby recombiner when processing offgas, and for purging gas mixtures from process and instrument lines prior to maintenance. These normal air purge flow rates are not used while the system processes reactor offgas. The air is supplied from a compressor that does not use oil for lubrication of the compressor cylinder, as oil compromises the performance of the catalytic recombiners and charcoal adsorbers. During both startup and normal operation, air is bled to the standby recombiner train just downstream of the final SJAE suction valve for train purging after

switchover. Flow indicators are provided on all air bleed lines to assure that proper air flow is being delivered to the process line or equipment. The air supply is protected from back flow of process gas by two check valves in series in order to comply with Bulletin 80-10, May 6, 1980 (Reference 11.3-13).

11.3.2.5.8 Rangeability

The process can accommodate reactor operation from 0 to 100% of full power. In normal operation, radiolytic gas production varies linearly with thermal power. The process can accommodate the airflow range shown in Table 11.3-1 for the full range of reactor power operation.

In addition, the process can mechanically accommodate a higher startup airflow upon initiation of the SJAEs. This startup airflow results from evacuation of the turbine condensing equipment while the reactor is in the range of about 3% to 7% of rated power.

11.3.2.5.9 Redundancy

Active equipment (e.g., catalytic recombiner trains, dryers and valves) whose operation is necessary to maintain operability of the OGS is redundant. Passive equipment (e.g., charcoal adsorber) is not redundant. Instrumentation that performs an information function, and is backed up by design considerations or other instrumentation, is not redundant. Instrumentation used to record hydrogen concentration or activity release (e.g., flow measurement and hydrogen analyzers) is redundant.

Design provisions are incorporated that preclude the uncontrolled release of radioactivity to the environment as a result of a single equipment failure, short of the equipment failure accident described in Subsection 11.3.7. An analysis of single equipment piece malfunctions is provided in Table 11.3-3.

Design precautions taken to prevent uncontrolled releases of activity include the following:

- The system design minimizes ignition sources so that a hydrogen detonation is highly unlikely even in the event of a recombiner failure.
- The system pressure boundary is detonation-resistant as described in Subsection 11.3.2.6, in addition to the measure taken to avoid a possible detonation.
- All discharge paths to the environment are monitored. The Process Radiation Monitoring System (PRMS) monitors the normal effluent path and the Area Radiation Monitoring System monitors the equipment areas.
- Dilution steam flow to the SJAE is monitored and alarmed, and the valving is required to be such that loss of dilution steam cannot occur without coincident closure of the process gas suction valve(s) so that the process gas is sufficiently diluted if it is flowing at all.

11.3.2.5.10 Charcoal Adsorber Bypass

A piping and valving arrangement is provided, which allows isolation and bypass of the charcoal adsorber vessel that may have caught fire or become wetted with water, while continuing to process the offgas flow through the remaining adsorber vessels. A nitrogen purge can be injected upstream of the vault entrance so that further combustion is prevented and the charcoal

PRELIMINARY

is cooled below its ignition temperature. Normal offgas flow is through one Guard Bed and eight large charcoal beds. Capability is provided to employ all or a portion of the charcoal adsorber vessels (either guard bed or charcoal beds) to treat the offgas flow during off-standard process operating conditions. Capability is also provided to bypass all charcoal adsorber vessels during plant startup and/or when fuel performance allows.

The main purpose of this bypass is to protect the charcoal during preoperational and startup testing when gas activity is zero or very low, and when moisture is most likely to enter the charcoal beds. The bypass valve arrangement is such that no single valve failure or valve mis-operation would allow total charcoal bypass. The bypass mode of charcoal operation is not normal for power operation. However, it may be used if the resulting activity release is acceptable.

11.3.2.5.11 Valves

All power operated valves with operators located on the gas process stream are operable from the main control room. Where radiation levels permit, valves handling process fluids are installed in service areas where maintenance can be performed if needed during operation.

11.3.2.5.12 Nitrogen and Air Purge

A nitrogen purge and air supply line is connected to the offgas process just upstream of the first in-line charcoal adsorber vessel (guard bed). This arrangement is to allow the vessel to be nitrogen purged after a possible fire is detected or dried with heated air if the charcoal is wetted, while the offgas flow is bypassed around it and through the remaining charcoal vessels. Another nitrogen purge line is also provided just upstream of the remaining charcoal adsorber vessels that allows them to be purged, if required, without interrupting the processing of offgas through the guard bed. Both nitrogen purge lines are equipped with double check valves and tell-tale leak-off connections to permit periodic checks to confirm their integrity and to minimize contamination of the nitrogen system. The isolation valves in the nitrogen and air purge lines and the connection for the gas supply are accessible from outside the charcoal vault.

11.3.2.6 Component Design

For portions of the system that may contain an explosive mixture, the design provides for ignition sources to be minimized and the system to be able to sustain an explosion without loss of integrity. This analysis is covered in proprietary report NEDE-11146 (Reference 11.3-11).

Calculation methods for translation of detonation pressures into wall thickness are summarized in ANSI-55.4 (Reference 11.3-6). Equipment are designed and constructed in accordance with the requirements of Table 11.3-2.

Tank codes are per the noted requirements of Table 3.2-1 for K30 Offgas Systems.

11.3.2.6.1 Materials

Per RG 1.143 (Reference 11.3-3), Regulatory Position 2, materials for pressure-retaining components of process systems[1] are selected from those covered by the material specifications listed in Section II, Part A of the ASME Boiler and Pressure Vessel Code, except that malleable,

1 "Process System" refers to that portion of the OGS that normally processes SJAE Offgas.

wrought or cast-iron materials, and plastic pipe are not allowed in this application. The components satisfy the mandatory requirements of the material specifications with regard to manufacture, examination, repair, testing, identification, and certification.

11.3.2.6.2 Pressure Relief

Adequate pressure relief is provided at all locations where it is possible to isolate a portion of the system containing a potential heat source that could cause excessive pressure. Adequate pressure relief is also provided downstream of pressure reducing valves to protect equipment from overpressure. Radioactive gaseous pressure relief discharge is piped to the main condenser.

11.3.2.6.3 Equipment Room Ventilation Control

The equipment rooms are under negative ventilation control. The equipment in the equipment rooms is qualified for the environmental conditions it is expected to see.

Differential pressure between general areas and equipment cells is sufficient to maintain a flow of air from clean areas into potentially contaminated areas. In addition, the Turbine Building Heating, HVAC System (TBVS) is capable of removing sufficient heat from the process piping, equipment, motors, and instrumentation so as to maintain the environmental temperatures as established. All equipment cell and charcoal vault ventilation air is discharged without passing through occupied areas to the TB compartment exhaust system and the turbine building exhaust ventilation stack, where effluent radiation monitoring is performed. Charcoal vault air conditioning and ventilation equipment are accessible for maintenance during plant operation.

11.3.2.6.4 Leakage

The leakage criteria apply from the SJAE through the OGS, including all process equipment and piping in between as shown on Figure 11.3-1. Leakage from the process through purge or tap lines to external atmospheric pressure is sufficiently low so it is undetectable by "soap bubble" test. This requirement does not apply to in-line process valves.

Instrument panels (e.g., hydrogen analyzers) connected to process gas are enclosed, the enclosure maintained under a negative pressure, and vented to an equipment vault or to building ventilation. To reduce instrument line leakage, welded or swedged, rather than threaded, connections are used wherever possible.

11.3.2.6.5 Vents and Drains

OGS drains, depending on source, are routed to either the condenser hotwell or to the radwaste system. All piping is provided with high point vents and low point drains to permit system drainage following the hydrostatic test. A water drain is provided on the process lines just upstream of the charcoal tanks. The process lines through the charcoal adsorbers are sloped so that there are no intervening low spots to act as water traps.

11.3.2.6.6 Valves

No valves controlling the flow of process gas are located in the charcoal adsorber vault. For all valves exposed to process offgas, valve seats are designed to avoid sparks.

All valves exposed to process gas have bellows stem seals, double stem seals or equivalent.

PRELIMINARY

11.3.2.6.7 Catalytic Recombiners

The recombiners are mounted with the gas inlet at the bottom. The inlet piping has sufficient drains and moisture separators to prevent liquid water from entering the recombiner vessel during startup. The recombiners are catalytic type with non-dusting catalyst supported on a metallic base. The catalyst is replaceable without requiring replacement or removal of the external pressure vessel.

Each catalytic recombiner is preceded by a preheater and followed by a condensing heat exchanger. The preheater uses steam to heat the offgas process stream gases to at least the minimum values shown in Table 11.3-1 before it reaches the catalyst in the recombiner. The recombined hydrogen and oxygen, in the form of super-heated steam, which leaves the catalytic recombiner, is then condensed (by power cycle condensate) to liquid water in the condenser , while the noncondensable gases are cooled to temperatures below the maximum value shown in Table 11.3-1. The condensed water in the condenser is drained to a loop seal that is connected to the main condenser hotwell. Condensed preheater steam is drained to the above loop seal that is connected to the hotwell.

No flow paths above low power operation exist whereby unrecombined offgas can bypass the recombiners.

11.3.2.6.8 Charcoal Adsorber Vessels

The charcoal adsorber vessels are to be cylindrical tanks installed vertically.

Channeling in the charcoal adsorbers is prevented by supplying an effective flow distributor on the inlet and by a high bed-to-particle diameter ratio. Temperature elements are installed along the charcoal adsorber vessels in sufficient quantity to monitor the temperature profile along the flow path during operation.

11.3.2.6.9 Charcoal Adsorber Vault

The temperature within the charcoal adsorber vault is maintained and controlled by appropriate connection(s) to the TBVS. The decay heat is sufficiently small that, even in the no-flow condition, there is no significant loss of adsorbed noble gases because of temperature rise in the adsorbers.

The charcoal adsorber vault itself is designed for the temperature range shown in Table 11.3-1 because it may be necessary to heat a vessel or the vault to the maximum temperature (by the use of portable heaters) to facilitate drying the charcoal. A smoke detector is installed in the charcoal adsorber vault to detect and provide alarm to the operator as a charcoal fire within the vessel(s) results in the burning of the exterior paint surface (Subsection 9.4.4).

11.3.2.6.10 Construction of Process Systems

Pressure-retaining components of process systems employ welded construction to the maximum practicable extent. Process piping systems include the first root valve on sample and instrument lines.

11.3.2.6.11 Moisture Separator

A moisture separator is incorporated into the cooler condenser heat exchanger.

PRELIMINARY

11.3.2.6.12 Maintenance Access

The system equipment is generally not accessible for maintenance during system operation. Therefore, equipment is intended to be accessible during the plant outages. The following are exceptions:

- The redundant offgas recombiner trains are located in separate rooms to allow maintenance access to the standby train when processing offgas in the operable train.
- Control valving and hydrogen analyzers are accessible for maintenance during the out-of-service portion of their cycle.
- Charcoal vault air conditioning and ventilation equipment are accessible for maintenance during plant operation.

The OGS is designed, constructed, and tested to be as leak tight as practicable.

Design features which reduce or ease required maintenance or which reduce personnel exposure during maintenance include the following:

- Redundant components for all active, in-process equipment pieces located in separate shielded cells.
- Block valves with air bleed pressurization for maintenance, which may be required during plant operation.
- Shielding of non-radioactive auxiliary subsystems from the radioactive process stream.

Design features that reduce leakage and releases of radioactive material include the following:

- Extremely stringent leak rate requirements placed upon all equipment, piping and instruments and enforced by requiring helium leak tests of the entire process system as described in Section 11.3.5.
- Use of welded joints wherever practicable.
- Specification of valve types with extremely low leak rate characteristics (i.e., bellows seal, double stem seal, or equal).
- Routing of most drains through loop seals to the main condenser.
- Specification of stringent seat-leak characteristics for valves and lines discharging to the environment.

11.3.2.7 Seismic Design

OGS is in compliance with the requirements of RG 1.143 for seismic design RW-IIa.

11.3.3 Ventilation System

Radioactive gases are present in the power plant buildings as a result of process leakage and steam discharges. The process leakage is the source of the radioactive gases in the air discharged through the ventilation system. The design of the ventilation system is described in Section 9.4. The radioactivity levels from the ventilation systems are discussed in Section 12.2. The ventilation flow rates are shown in Section 9.4.

PRELIMINARY

11.3.4 Radioactive Releases

Refer to Section 12.2 for radioactive release information from the OGS.

11.3.5 Testing and Inspection Requirements

Because the gaseous radioactive waste system has no safety-related function, no inservice inspection of the components is required.

Preoperational and startup testing, which includes hydrostatic testing of system components and piping; soap bubble testing of instrument and purge lines, helium leak testing; and verification of air ejector pressure and flow, preheater operation (recombiner inlet temperature), catalyst temperature, and offgas condenser operation; is accomplished as described within Section 14.2. These inspection and testing provisions are in compliance with the requirements of RG 1.143 (Reference 11.3-3).

During normal operation, the hydrogen analyzers, process components, and monitoring instrument channels are periodically tested and calibrated to ensure that the explosive gas mixture is below the flammability limit and projected doses from gaseous effluent releases are kept as low as reasonably achievable and below regulatory limits.

The quality assurance program for design, fabrication, procurement, and installation of the gaseous radioactive waste system is in accordance with the overall quality assurance program described in Chapter 17.

11.3.6 Instrumentation Requirements

Control and monitoring of the OGS process equipment is performed locally or remotely from the main control room. Generally, system control is from the main control room. Instrument components are installed wherever possible in accessible areas to facilitate operation and maintenance. Only instrument sensing elements are permitted behind shield walls.

The temperature of the gaseous waste stream is measured in the preheater and at various locations in the recombiner to assure that recombination is occurring. The gaseous waste stream temperature is also measured after both the offgas condenser and the cooler condenser to assure the stream is cooled sufficiently to remove undesired moisture. These temperatures are alarmed in the main control room.

The flow rate of the offgases is continuously monitored. The offgas flow rate, in conjunction with activity concentrations as measured by the monitor downstream of the recombiners and the monitor downstream of the charcoal adsorbers, permits monitoring fission gases from the reactor, calculation of offgas discharge to the vent, and calculation of the charcoal adsorber system performance.

OGS hydrogen concentration and effluent radiation level are continuously monitored, and at a preset high level, alarm locally, and in the Main Control Room.

Offgas pre-treatment radiation monitors are described in Subsection 11.5.3.2.1, Offgas post-treatment radiation monitors are described in Subsection 11.5.3.2.2.

PRELIMINARY

11.3.7 Radioactive OffGas System Leak or Failure

11.3.7.1 Basis and Assumptions

The radiological consequences for an OGS accident as specified in Standard Review Plan 11.3 (Reference 11.3-18), BTP 11-5 are presented. The BTP assumptions were used except as detailed below to evaluate this accident. The accident parameters are shown in Table 11.3-4. The results are presented in Tables 11.3-6 and 11.3-7 and show the ESBWR design to be compliant with the requirements of the BTP.

The system is designed to be detonation resistant, and seismic per Table 3.2-1, and meets all criteria of RG 1.143 (Reference 11.3-3). As such, the failure of a single active component leading to a direct release of radioactive gases to the environment is highly unlikely. Therefore, inadvertent operator action with bypass of the delay charcoal beds is analyzed for compliance to BTP 11-5. A top-level diagram of the ESBWR OGS found in Figure 11.3-1 shows the ESBWR charcoal beds consist of ten charcoal tanks. The first and second, or guard tanks contain charcoal followed by a flow split into two lines, each line leads through four tanks, each containing charcoal. The normal operation of the OGS shall take place in the treat mode. The treat mode shall provide a valve alignment to send a process flow through one guard bed and all the remaining charcoal adsorbers. Bypass valves exist to direct flow around (1) one active and one standby guard tank, (2) two parallel streams of follow-on tanks, or (3) one guard bed and the two parallel streams of follow-on tanks. To bypass either pathway (1) or (2) above requires the operator to enter a computer command with a required permissive. Bypassing all tanks requires the operator to key in the command with two separate permissives. Because the bypass of all tanks would require both inadvertent operation upon the operator (keying in the wrong command) plus getting two specific permissives for the incorrect decisions, it is assumed not likely to occur. Downstream of the charcoal beds shown on Figure 11.3-1 are a series of two redundant radiation monitoring instruments and an air-operated isolation valve. Upon receiving a High signal, the system alarms in the MCR. A High-High signal causes the system to automatically re-align to process offgas flow through both the guard beds and the charcoal beds. Therefore, bypass of the charcoal beds during periods with significant radioactive flow through the OGS are limited and/or automatically terminated by actuation of the downstream sensors. A High-High-High signal isolates flow through the OGS.

To evaluate the potential radiological consequences of an inadvertent bypass of the charcoal beds, it was assumed that operator error or computer error has led to the bypass of the eight follow-on beds in addition to the failure of the automated air-operated downstream isolation valve. It is also assumed that during this period, the plant is running at, and continues to run at, the maximum permissible offgas release rate based upon the assumption of 100 μCi/sec/MWt as stipulated in Standard Review Plan 11.3 (Reference 11.3-18), and evaluated to a decay time of 30 minutes from the main condenser air ejector (Reference 11.3-21). Even with the failure of the downstream isolation valve, it is not anticipated or assumed that the isolation instrumentation would fail, but would instead alarm the control room with a high radiation alarm, causing the operator to manually isolate the OGS (i.e., close suction valves) within 1 hour of the alarm.

PRELIMINARY

Therefore, this analysis differs from the BTP on the following points:

- There is no motive force to remove any significant inventory from the eight follow-on charcoal tanks while in bypass and, therefore, no activity from these tanks is included in the final release calculations.
- With redundant instrumentation, it is expected that operator intervention to either shut off the bypass or isolate the OGS is predicted to occur within 1 hour. Therefore, the total flow from the system is evaluated for 1 hour and not the 2 hour period stipulated in BTP 11-5 (Reference 11.3-18).

11.3.7.2 Results

The DBA evaluation assumptions are given in Table 11.3-4, the isotopic flows and releases in Table 11.3-5 and Table 11.3-6, and the meteorology and dose results in Table 11.3-7.

The dose results are given in Table 11.3-7, and are within the limiting 25 mSv (2.5 Rem) whole body dose for an offgas system designed to withstand explosions and earthquakes, per BTP 11-5 (Reference 11.3-18) and RG 1.143 (Reference 11.3-3).

11.3.8 COL Information

None.

11.3.9 References

11.3-1 Title 10 Code of Federal Regulations Part 50, Appendix I, "Numerical Guides for Design Objectives and Limiting Conditions for Operation to Meet the Criterion 'As Low as is Reasonably Achievable' for Radioactive Material in Light-Water-Cooled Nuclear Power Reactor Effluents."

11.3-2 Title 10 Code of Federal Regulations Part 20 Appendix B, "Annual Limits on Intake (ALIs) and Derived Air Concentrations (DACs) of Radionuclides for Occupational Exposure; Effluent Concentrates; Concentrations for Release to Sewage."

11.3-3 Nuclear Regulatory Commission, Regulatory Guide 1.143, "Design Guidance for Radioactive Waste Management Systems, Structures, and Components Installed in Light-Water-Cooled Nuclear Power Plants," Revision 2, November 2001.

11.3-4 (Deleted)

11.3-5 (Deleted)

11.3-6 American National Standards Institute, "Gaseous Radioactive Waste Processing Systems for Light Water Reactor Plants," ANSI/ANS-55.4-1993 (R1999).

11.3-7 W.E. Browning, et al., "Removal of Fission Product Gases from Reactor Offgas Streams by Absorption," June 11, 1959, Oak Ridge National Laboratory (ORNL) CF59-6-47.

11.3-8 D.P. Seigwarth, "Measurement of Dynamic Absorption Coefficients for Noble Gases on Activated Carbon," Proceedings of the12th AEC Air Cleaning Conference.

11.3-9 (Deleted)

11.3-10 (Deleted)

PRELIMINARY

11.3-11 General Electric Co., "Pressure Integrity Design Basis for New Off-Gas Systems," NEDE-11146, July 1971 (Proprietary).

11.3-12 (Deleted)

11.3-13 Inspection and Enforcement, Bulletin 80-10, "Contamination of Nonradioactive System and Resulting Potential for Unmonitored, Uncontrolled Release of Radioactivity to Environment," May 6, 1980.

11.3-14 Nuclear Regulatory Commission, Regulatory Guide 8.8, "Information Relevant to Ensuring that Occupational Radiation Exposures at Nuclear Power Stations will be as Low as is Reasonably Achievable," Revision 3, June 1978.

11.3-15 Title 10 Code of Federal Regulations, Part 50, Appendix A, GDC 60 "General Design Criteria for Nuclear Power Plants, Control of Releases of Radioactive Materials to the Environment."

11.3-16 Title 10 Code of Federal Regulations, Part 50, Appendix A, GDC 64 "General Design Criteria for Nuclear Power Plants, Monitoring Radioactivity Releases."

11.3-17 Title 10 Code of Federal Regulations, Part 20.1406 "Minimization of contamination."

11.3-18 NUREG-0800, Standard Review Plan, 11.3 "Gaseous Waste Management System," Revision 3, March 2007 and BTP 11-5 "Postulated Radioactive Releases Due to a Waste Gas System Leak or Failure."

11.3-19 Title 10 Code of Federal Regulations, Part 50, Appendix A, GDC 3 "General Design Criteria, Fire Protection."

11.3-20 Title 10 Code of Federal Regulations, Part 50.34a "Design Objectives for Equipment to Control Releases of Radioactive Material in Effluents – Nuclear Power Reactors" and Part 52.47 "Contents of Applications; technical information."

11.3-21 Nuclear Regulatory Commission, Regulatory Guide 1.112, "Calculation of Releases of Radioactive Materials in Gaseous and Liquid Effluents from Light-Water-Cooled Nuclear Powered Reactors," Revision 0-R, May 1977.

PRELIMINARY

Table 11.3-1

Offgas System Design Parameters[1]

Design Parameter	Design Value
Design basis noble radiogas release rate	3700 MBq/s (100,000 μCi/s)
Assumed air in-leakage	51 m^3/h standard (30 scfm)
Xenon delay	60-day[2]
Krypton delay	78.6 hours[2]
Argon delay	27.2 hours[2]
Iodine removal efficiency	99.99[2] and [3]
Maximum gaseous waste stream temperature	67°C (153°F)
Charcoal temperature (approximate)	35°C (95°F)
Maximum cooler condenser temperature	18°C (65°F)
Chilled water temperature (approximate)	7°C (45°F)
Gaseous waste stream temperature (approximate)	35°C (95°F)
Nominal off gas preheater temperature	177°C (351°F)
Maximum off gas preheater temperature	210°C (410°F)
Nominal preheater steam supply temperature	192°C (378°F)[5]
Design preheater steam supply temperature	208°C (406°F)[5]
Out-of-service hydrogen/oxygen catalytic recombiner minimum temperature	121°C (250°F)
Minimum activated charcoal ignition temperature	156°C (313°F)
Minimum air bleed supply rate[4]	0.17 m^3/min (6 scfm)
Air bleed to standby recombiner train at startup and normal operation	0.17 m^3/min (6 scfm)
Radiolytic gas flow range	0 to 8.6 m^3/min (302 scfm)
Charcoal adsorber vault temperature range	29°C (84°F) to 40°C (104°F)
Charcoal particle size	8–16 mesh United States Standard (USS) with less than 0.5% under 20 mesh
Charcoal moisture content	< 5% by weight
Maximum offgas activity input concentration	5.9E+6 Bq/cm^3
Charcoal Guard Bed Mass	33,000 lbs (15 metric tons)
Charcoal Bed Mass	490,000 lbs (222 metric tons)

(1) For additional information on radioactive releases, refer to Sections 11.1 and 12.2.
(2) Offgas processing equipment will meet or exceed these values.
(3) No Iodine is assumed to be released.

PRELIMINARY

(4) Minimum 6 scfm refers to leakage plus bleed air.
(5) These are approximate temperatures based upon saturated steam.

PRELIMINARY

Table 11.3-2

Offgas System Major Equipment Items

Recombiner Train(2 required, contains preheater, catalyst, and condenser)	
Inter-Connecting Piping	
Design pressure:	2.41 MPa gauge (350 psig)
Design temperature:	232°C (450°F)
Code of construction:	ANSI/ASME B31.3
Preheater	Shell and tube heat exchanger
Shell-side design pressure:	2.41 MPa gauge (350 psig)
Shell-side design temperature:	232°C (450°F)
Shell Pressure Protection	Relief Valve – ASME BPVC Section VIII, Division 1
Tubes:	Stainless steel
Tube-side design temperature:	302°C (575°F)
Tube-side design pressure:	8.6 MPa gauge (1250 psig)
Code of construction:	TEMA Class C
Catalytic Recombiner	
Catalyst support:	Stainless steel
Design temperature:	482°C (900°F)
Catalyst:	Precious metal on metal base
Code of construction:	ASME BPVC Section VIII, Division 1
Offgas Condenser	Shell and tube heat exchanger
Shell-side design pressure:	2.41 MPa gauge (350 psig)
Shell-side design temperature:	482°C (900°F)
Shell Pressure Protection	Relief Valve – ASME BPVC Section VIII, Division 1
Tubes:	Stainless steel
Tube-side design pressure:	2.41 MPa gauge (350 psig)
Design temperature:	482°C (900°F)
Code of construction:	TEMA Class C
Cooler Condenser (2 required)	
Shell and Tube Heat Exchanger, Carbon Steel Vessel	
Shell-side design pressure:	2.41 MPa gauge (350 psig)
Shell-side design temperature:	121°C (250°F)

PRELIMINARY

Table 11.3-2

Offgas System Major Equipment Items

Shell Pressure Protection	Relief Valve – ASME BPVC Section VIII, Division 1
Tubes:	Stainless steel
Tube-side design pressure:	1 MPa gauge (145 psig)
Code of construction:	TEMA Class C
Dryer (2 required)	
Design pressure	2.41 MPa gauge (350 psig)
Design temperature	121°C (250°F)
Dew point temperature	7°C (45°F)
Code of construction	ASME Section VIII, Division 1
Charcoal Adsorbers (10 required – 2 Guard Beds and 8 Main Beds)	
Carbon Steel Vessels Filled with Activated Charcoal	
Design pressure:	2.41 MPa gauge (350 psig)
Design temperature:	121°C (250°F)
Code of construction:	ASME Section VIII, Division 1

PRELIMINARY

Table 11.3-3

Equipment Malfunction Analysis

Equipment Item	Malfunction	Result(s)	Design Precautions
Steam jet air ejectors	Low flow of motive high pressure steam	If the hydrogen and oxygen concentrations exceed 4 % volume, the catalytic recombiners temperature rise is excessive.	Automatic system isolation on low steam flow.
		Inadequate steam flow causes overheating and may result in exceeding the design temperature of the catalytic recombiner vessel.	Steam flow to be held at constant maximum flow regardless of plant power level.
	Wear of steam supply nozzle of ejector	Increased steam flow to the catalytic recombiner could reduce degree of recombination at low power levels. High discharge temperature from catalytic recombiner could result because of inadequate condenser capacity.	Temperature alarms on preheater exit (catalyst inlet). Downstream H_2 analyzer alarms. High temperature alarms on exit from catalytic recombiner.
OGS Preheater	Steam leak	Steam consumption and shell temperature would increase. Relief valves would limit shell pressure.	Spare recombiner train.
	Low pressure steam supply	Catalytic recombiner performance could fall off at low-power level, and hydrogen content of recombiner gas discharge could increase eventually to a combustible mixture.	Low temperature alarms on preheater exit (catalyst inlet). Downstream H_2 analyzer alarm.
Catalytic Recombiner	Catalyst gradually deactivates	Temperature profile changes through catalyst. Eventually excess H_2 would be detected by H_2 analyzer or by offgas flowmeter. Eventually the gas could become combustible.	Temperature probes in catalyst bed and H_2 analyzer provided. Spare recombiner train.

PRELIMINARY

Table 11.3-3

Equipment Malfunction Analysis

Equipment Item	Malfunction	Result(s)	Design Precautions
	Catalyst gets wet at start	H_2-O_2 recombination fails. Eventually the gas downstream of the catalytic recombiner could become combustible.	Condensate drains, temperature probes in catalytic recombiner, air bleed system at startup, spare recombiner train, and hydrogen analyzers.
OGS Condenser	Cooling water leak	The coolant (reactor condensate) would leak to the process gas (shell) side. This would be detected by drain flow increase. Moderate leakage would be of no concern from a process standpoint. (The process condensate drains to the hotwell.)	Drain high flow alarm. Redundant recombiner train.
Cooler condenser	Corrosion of tubes	Water would leak into process (shell) side and be sent to main condenser hotwell.	Stainless steel tubes specified. Conductivity cell in condenser drain.
Moisture separator in cooler condenser	Corrosion of wire mesh element	Increased moisture would be retained in process gas routed to charcoal over a long period.	Stainless steel mesh specified. Spare cooler condenser provided. Levels in pre-charcoal drain.
Refrigerant Dryer	Refrigerant gas leaks	Compressor parameters exceed operating limits. Compressor trips.	Guard Bed absorbs moisture until flow is rerouted to redundant dryer.
Charcoal adsorbers	Charcoal gets wet	Charcoal performance deteriorates gradually as moisture deposits. Holdup times for krypton and xenon would decrease, and plant emissions would increase. Provisions made for drying charcoal as required during annual outage.	High instrumented, mechanically simple gas dehumidification system.

PRELIMINARY

Table 11.3-3

Equipment Malfunction Analysis

Equipment Item	Malfunction	Result(s)	Design Precautions
System	Internal detonation	Release of radioactivity if pressure boundary fails.	Main process equipment and piping are designed to contain a detonation.
		Internal damage to the catalytic recombiner and its heat exchanger.	Redundant catalytic recombiner, damaged internals can be repaired.
		Damage to instrumentation sensors.	Redundant, damaged sensors can be replaced.
System	Earthquake damage	Release of radioactivity.	System is designed in accordance with RG 1.143 to withstand the effects of earthquakes (Subsection 11.3.7).

PRELIMINARY

Table 11.3-4

Offgas System Failure Accident Parameters

I. Data and Assumptions Used to Estimate Source Terms	
a. Power Level	4,500 MWt
b. Offgas Release Rate	1.67E+4 MBq/s[1] (4.5E+5 μCi/s)
c. Duration of Release	1h
II. Dispersion and Dose Data	
a. Meteorology	Table 11.3-7
b. Dose Methodology	Reference 11.3-18
c. Dose Conversion Assumptions	Reference 11.3-18
d. Activity Releases	Table 11.3-6
e. Dose Evaluations	Table 11.3-7

1 Isotopic rates refer to a 30-minute decay time.

PRELIMINARY

Table 11.3-5

Isotopic Source Rates for Design Basis*

Isotope	t=0		t=30 min	
	MBq/s	Ci/s	MBq/s	Ci/s
Kr-83m	1.3E+2	3.5E-3	1.1E+2	2.9E-3
Kr-85m	2.2E+2	6.0E-3	2.1E+2	5.5E-3
Kr-85	8.9E-1	2.4E-5	8.9E-1	2.4E-5
Kr-87	7.3E+2	2.0E-2	5.6E+2	1.5E-2
Kr-88	7.3E+2	2.0E-2	6.5E+2	1.8E-2
Kr-89	4.4E+3	1.2E-1	6.4E+0	1.7E-4
Total Kr				4.1E-2
Xe-131m	7.3E-1	2.0E-5	7.3E-1	2.0E-5
Xe-133m	1.1E+1	2.9E-4	1.1E+1	2.9E-4
Xe-133	3.1E+2	8.4E-3	3.1E+2	8.4E-3
Xe-135m	9.4E+2	2.6E-2	2.5E+2	6.8E-3
Xe-135	8.4E+2	2.3E-2	8.1E+2	2.2E-2
Xe-137	5.9E+3	1.6E-1	2.6E+1	6.9E-4
Xe-138	3.3E+3	9.0E-2	7.7E+2	2.1E-2
Total Xe				5.9E-2
Kr+Xe				1.00E-1

* Only the major isotopic constituents are identified.

PRELIMINARY

Table 11.3-6

Releases to the Environment*

Isotope	Release Rate		Releases	
	MBq/s	Ci/s	MBq	Ci
Kr-83m	4.88E+2	1.32E-2	1.76E+6	4.75E+1
Kr-85m	9.22E+2	2.49E-2	3.32E+6	8.97E+1
Kr-85	4.00E+0	1.08E-4	1.44E+4	3.89E-1
Kr-87	2.50E+3	6.75E-2	8.99E+6	2.43E+2
Kr-88	2.91E+3	7.88E-2	1.05E+7	2.84E+2
Kr-89	2.90E+1	7.83E-4	1.04E+5	2.82E+0
Total Kr	6.85E+3	1.85E-1	2.47E+7	6.67E+2
Xe-131m	3.28E+0	8.86E-5	1.18E+4	3.19E-1
Xe-133m	4.86E+1	1.31E-3	1.75E+5	4.73E+0
Xe-133	1.39E+3	3.76E-2	5.01E+6	1.35E+2
Xe-135m	1.13E+3	3.05E-2	4.06E+6	1.10E+2
Xe-135	3.65E+3	9.85E-2	1.31E+7	3.55E+2
Xe-137	1.15E+2	3.12E-3	4.15E+5	1.12E+1
Xe-138	3.46E+3	9.36E-2	1.25E+7	3.37E+2
Total Xe	9.80E+3	2.65E-1	3.53E+7	9.53E+2
Kr+Xe	1.67E+4	4.50E-1	5.99E+7	1.62E+3

* Only the major isotopic constituents are identified.

PRELIMINARY

Table 11.3-7

Offgas System Failure Meteorology and Dose Results

EAB X/Q	Whole Body Dose	BTP 11-5 Dose Limit
2.0 E-3 s/m^3*	6.2 mSv (0.62 Rem)	25 mSv (2.5 Rem)

* DCD Table 2.0-1

PRELIMINARY

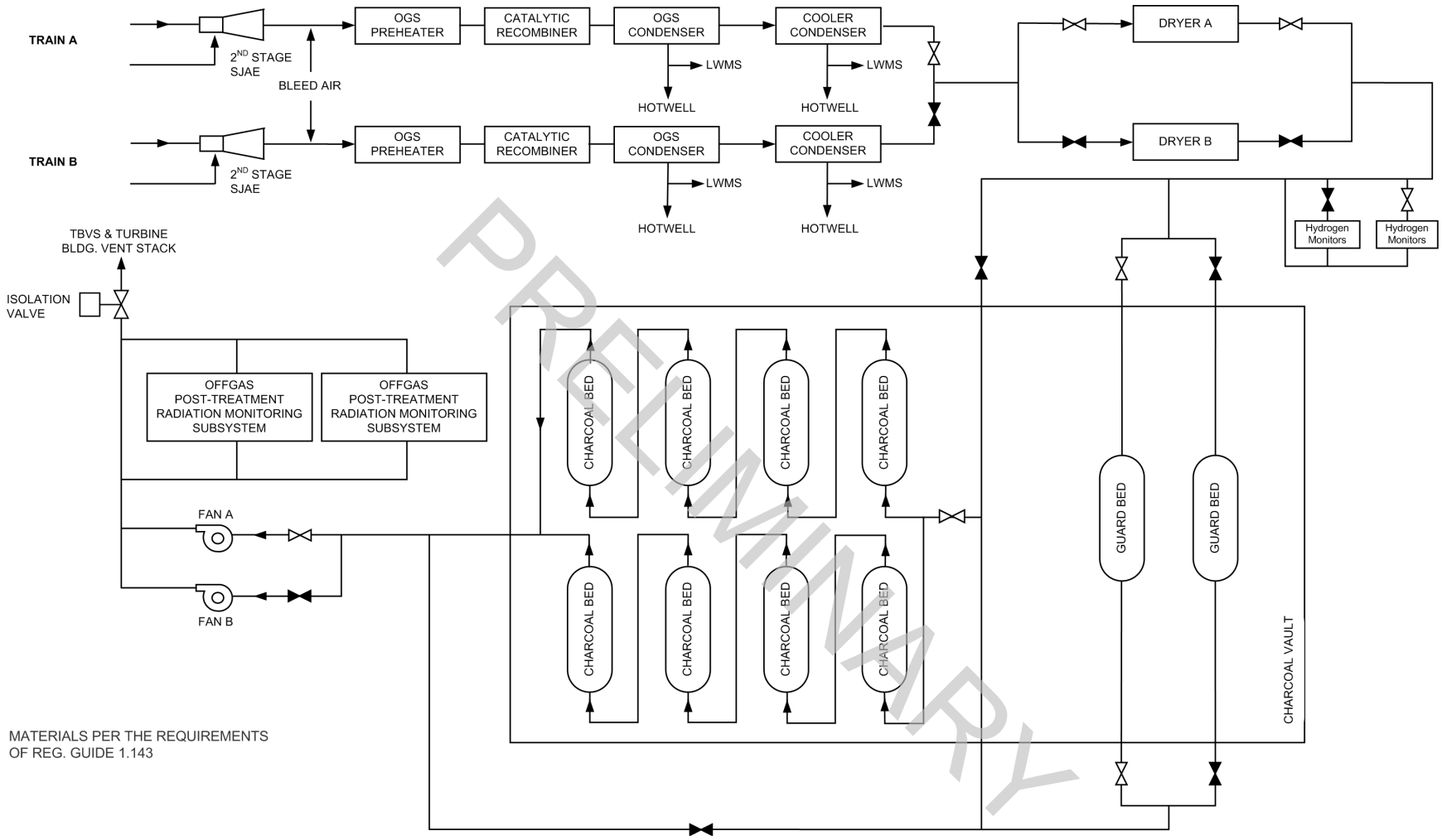

Figure 11.3-1. Offgas System

11.4 SOLID WASTE MANAGEMENT SYSTEM

The Solid Waste Management System (SWMS) is designed to control, collect, handle, process, package, and temporarily store wet and dry solid radioactive waste prior to shipment. This waste is generated as a result of normal operation and anticipated operational occurrences.

The SWMS is located in the radwaste building. It consists of the following four subsystems:

- SWMS Collection Subsystem,
- SWMS Processing Subsystem,
- Dry Solid Waste Accumulation and Conditioning Subsystem, and
- Container Storage Subsystem.

The SWMS Processing Diagram depicting all four subsystems is provided in Figure 11.4-1. The radwaste building general arrangement drawings are provided in Figures 1.2-21 through 1.2-25. The SWMS component capacities are provided in Table 11.4-1. The estimated annual shipped waste volumes generated from the SWMS Subsystems are provided in Table 11.4-2. The SWMS can process wastes at rates higher than shown in Table 11.4-2. The SWMS Collection is shown on Figure 11.4-2. The SWMS Processing Subsystem is shown on Figure 11.4-3.

Process and effluent radiological monitoring systems are described in Section 11.5.

11.4.1 SWMS Design Bases

The SWMS has no safety-related function. The SWMS is designed to provide collection, processing, packaging, and storage of bead resin, filter backwash, and dry solid waste resulting from normal operations.

- The SWMS is designed to meet the guidance of RG 1.143 (Reference 11.4-3).
- The SWMS is designed to keep the exposure to plant personnel "as low as reasonably achievable" (ALARA) during normal operation and plant maintenance, in accordance with RG 8.8 (Reference 11.4-4) and RG 8.10 (Reference 11.4-5).
- The SWMS is designed to package solid waste in Department of Transportation (DOT)-approved containers for offsite shipment and burial.
- The SWMS is designed to prevent the release of significant quantities of radioactive materials to the environment so as to keep the overall exposure to the public within 10 CFR 20 limits and in accordance with the limits specified in 10 CFR 50, Appendix I (Reference 11.4-21). Additionally, the SWMS is designed to comply with the requirements of 10 CFR 20.2007 (Reference 11.4-26).
- The SWMS is designed to package the wet and dry types of radioactive solid waste for offsite shipment and disposal, in accordance with the requirements of applicable NRC and DOT regulations, including 10 CFR 61.56 (Reference 11.4-17), 10 CFR 71 (Reference 11.4-22) and 49 CFR 171 (Reference 11.4-24) through 180 (Reference 11.4-25), as applicable. This results in radiation exposures to individuals and the general population within the limits of 10 CFR 20 and 10 CFR 50.

PRELIMINARY

- The seismic and quality group classification and corresponding codes and standards that apply to the design of the SWMS components and piping, and the structures housing the SWMS are discussed in Section 3.2.
- On-site storage space for a six-month volume of packaged waste is provided in the radwaste building. Depending on the availability and accessibility of adequate waste repositories in the future, NUREG-0800, Standard Review Plan 11.4 and BTP - ETSB 11-3 (Reference 11.4-1) Solid Waste Management System, Revision 3 March 2007, Appendix 11.4-A, Design Guidance for Temporary Storage of Low Level Radioactive Waste provide guidance for construction and management of a temporary storage facility. This temporary storage facility and an associated overall site waste management plan is intended to allow the station to operate while methods for further waste minimization and volume reduction are considered, such as the design and construction of additional volume reduction facilities, as necessary, and then the processing of the wastes that may have been stored during the construction of those facilities. The inclusion of a temporary storage facility and an overall site management plan per NUREG--0800 Standard Review Plan 11.4 and BTP–ETSB 11-3 (Reference 11.4-1), Revision 3 March 2007, Appendix 11.4-A, may be required (COL 11.4-4-A).
- All atmospheric collection and storage tanks are provided with an overflow connection at least the size of the largest inlet connection. The overflow is connected below the tank vent and above the high-level alarm setpoint. Each tank room is designed to contain the maximum liquid inventory in the event that the tank ruptures.

Isotopic activity in SWMS is presented in Tables 12.2-14a, b, c, d, and e. Any resultant gaseous and liquid wastes are routed to other plant sections. Gaseous radionuclides from the SWMS are processed by the monitored radwaste building ventilation system. The monitored ventilation system is described in Subsection 9.4.3 and Subsection 12.3.3.2.4. Liquid waste is processed by the monitored LWMS system as described in Section 11.2. Process and effluent radiological monitoring systems are described in Section 11.5.

Section 12.3 describes systems to detect conditions that may result in excessive radiation levels per 10 CFR Part 50, Appendix A, GDC 63 (Reference 11.4-14). Section 11.5 describes systems to monitor the effluent discharge paths for radioactive material per 10 CFR Part 50, Appendix A, GDC 64 (Reference 11.4-15).

A description of the SWMS design features addressing 10 CFR 20.1406 (Reference 11.4-7) requirements for permanently installed systems is in Subsection 12.3.1.5. The COL Applicant is responsible for including site-specific information describing how the implementation of operating procedures for the SWMS Processing Subsystem will address the requirements of 10 CFR 20.1406 (Reference 11.4-7). Specifically the operational procedures of the SWMS Processing Subsystem should minimize, to the extent practicable, contamination of the facility and the environment, facilitate decommissioning, and minimize the generation of radioactive wastes (COL 11.4-5-A). This information is placed in Subsection 12.3.1.5.

The Area Radiation Monitors for the Radwaste Building SWMS Collection Subsystem Area, the Radwaste Building Dry Solid Waste Accumulation and Conditioning Area and the Radwaste Building Container Storage Area are depicted on Figure 12.3-41 listed on Table 12.3-4 and

discussed in Subsection 12.3.4. The radwaste building seismic capability is described in Section 3.8.

The SWMS Processing Subsystem equipment is located within the radwaste building as previously referenced and described. The location of the SWMS equipment within the radwaste building with monitored process effluents ensures compliance with 10 CFR 20.1302 (Reference 11.4-6), 10 CFR 20 Appendix B (Reference 11.4-8) effluent concentrations, 10 CFR 50.34a and 10 CFR 52.47 (Reference 11.4-10), 10 CFR 50, Appendix A, GDC 60 (Reference 11.4-12) and GDC 61 (Reference 11.4-13), as they relate to radioactive materials released in gaseous and liquid effluents to unrestricted areas.

11.4.2 System Description

11.4.2.1 Summary Description

The SWMS controls, collects, handles, processes, packages, and temporarily stores solid waste generated by the plant prior to shipping the waste offsite. The SWMS processes the filter backwash sludges, RO concentrates, charcoal media, and bead resins generated by the Liquid Waste Management System (LWMS), Reactor Water Cleanup/Shutdown Cooling System (RWCU/SDC), Fuel and Auxiliary Pools Cooling System (FAPCS) and the Condensate Purification System (CPS). Contaminated solids such as High Efficiency Particulate Air (HEPA) and cartridge filters, rags, plastic, paper, clothing, tools, and equipment are also disposed of in the SWMS.

The SWMS is capable of receiving, processing, and dewatering the solid radioactive waste inputs for permanent offsite disposal. Liquids from SWMS operations are sent to the appropriate LWMS section for processing as depicted in Figure 11.2-1 and described in Section 11.2.

11.4.2.2 System Operation

The SWMS complies with RG 1.143 (Reference 11.4-3), Revision 2, November 2001, as noted in Subsection 11.4.1. Radwaste Building construction requirements meet the guidance of RG 1.143 (Reference 11.4-3) regarding safety-related classification is located in Subsection 3.8.4 and Subsection 3.8.4.1.5. RG 1.143 (Reference 11.4-3), Section 4.1, requires the design of radioactive waste management systems, structures and components to follow the direction in RG 8.8 (Reference 11.4-4). Compliance with RG 8.8 (Reference 11.4-4), Revision 3, June 1978 is located in Subsection 12.1.1.3 and Subsection 12.3.1. The SWMS consists of four process subsystems as listed below.

11.4.2.2.1 SWMS Collection Subsystem

The SWMS Collection Subsystem collects the spent bead resin slurry, spent charcoal media, filter and tank sludge slurry, and concentrated waste into the one of the six tanks in accordance with the waste characteristics. The SWMS Collection Subsystem is shown in Figure 11.4-2.

Spent bead resin sluiced from the RWCU, FAPCS, Condensate Purification System and LWMS is transferred to three spent resin tanks for storage. Spent resin tanks are categorized as follows:

- High Activity Resin Holdup Tank for receiving RWCU and FAPCS spent bead resin.
- Low Activity Resin Holdup Tank for receiving LWMS spent bead resin.

- Condensate Resin Holdup Tank for receiving Condensate Purification System spent bead resin.

The capability exists to keep the higher activity resins, the lower activity resins and condensate resins in separate tanks. Excess water from holdup tanks is pumped to the equipment drain collection tank or floor drain collection tank.

When sufficient bead resins have been collected in the high or low activity resin holdup tanks, they are mixed via the high or low activity resin transfer pump and sent to the SWMS Processing Subsystem. When sufficient bead resins have been collected in the condensate resin holdup tank, they are mixed via the resin transfer pump and sent to the LWMS pre-treatment ion-exchanger for reuse or the SWMS Processing Subsystem.

A High Activity Phase Separator and a Low Activity Phase Separator receive suspended solid slurries from the Condensate Purification System, process filtration system of the LWMS and HICs. The suspended solids are allowed to settle and the residual water is transferred by the low activity decant pump to the equipment drain collection tanks or floor drain collection tanks for further processing. When sufficient sludges have been collected in the tank, the sludges are normally mixed by the low activity resin transfer pump and sent to the SWMS Processing Subsystem by the low activity resin transfer pump.

During transfer operations of spent bead resins, and sludges, suspended solids are kept suspended by periodic and recirculation flushing to prevent them from agglomerating and possibly clogging lines.

The Concentrated Waste Tank receives concentrated waste from the reverse osmosis system of the LWMS. When sufficient concentrated waste has been collected in the tank, the concentrated waste is sent to the SWMS Processing Subsystem by a concentrated waste pump. A second concentrated waste pump is provided for operational flexibility.

11.4.2.2.2 SWMS Processing Subsystem

The SWMS Processing Subsystem is depicted in Figure 11.4-3. The SWMS Processing Subsystem consists of a dewatering station for high activity spent resin, and a dewatering station for low activity spent resin and sludge and a dewatering station for concentrated waste. An empty HIC is lifted off of a transport trailer and placed in each empty dewatering station. The tractor/trailer may then be released. The HIC closure lid is removed and placed in a laydown area. Spent cartridge filters may be placed in the HIC at this point, if not shipped in separate containers.

Next, the fill head is positioned over the HIC with a crane. The fill head includes a closed circuit television camera for remote viewing of the fill operation. The HIC is then filled with wet solid waste. Samples can be obtained during the fill operation.

Excess water is removed from the HIC and sent by a dewatering pump to either the high or low activity phase separator or the high activity, low activity or condensate spent resin tanks depending on HIC contents. Sufficient water is removed to ensure that there is very little or no free standing water left in the HIC.

PRELIMINARY

The fill head is then removed and placed in a laydown area. The closure head is then placed on the HIC. The HIC is provided with a passive vent to prevent pressure build up. Radiation shielding is provided around the HIC stations.

The estimated annual shipped waste volumes from processing wet solid wastes are presented in Table 11.4-2.

11.4.2.2.3 Dry Solid Waste Accumulation and Conditioning Subsystem

Dry solid wastes consist of air filters, miscellaneous paper, rags, etc., from contaminated areas; contaminated clothing, tools, and equipment parts that cannot be effectively decontaminated; and solid laboratory wastes. The offgas system activated carbon is rejuvenated by the offgas system and does not normally generate dry solid waste. Condition-specific action is taken regarding the removal, replacement, and processing of offgas activated carbon in the unlikely event that significant quantity of offgas system activated carbon requires replacement during the life of the plant. The activity of much of the dry solid wastes is low enough to permit handling by contact. These wastes are collected in containers located in appropriate areas throughout the plant, as dictated by the volume of wastes generated during operation and maintenance. The filled containers are sealed and moved to controlled-access enclosed areas for temporary storage.

Most dry waste is expected to be sufficiently low in activity to permit temporary storage in unshielded, cordoned-off areas. Dry Active Waste (DAW) is sorted and packaged in a suitably sized container that meets DOT requirements for shipment to either a licensed offsite processor or for ultimate disposal. The DAW is separated into three categories: non-contaminated wastes (clean), contaminated metal wastes, and the other wastes, i.e., clothing, plastics, HEPA filters, components, etc. Non-contaminated (clean) materials identified during the sorting process are removed for plant re-use or general debris disposal. (See Figure 11.4-4.)

In some cases, large pieces of miscellaneous waste are packaged into metal boxes in accordance with DOT shipping requirements. DAW and other solid waste is stored until enough is accumulated to permit economical transportation to an offsite burial ground for final disposal or an approved radwaste processor.

The capability exists to bring shipping containers into the truck bay. Bagged DAW can be directly loaded into the shipping container for burial or processing in offsite facilities. A weight scale is provided to ensure optimum shipping/disposal weight of the shipping container.

Cartridge filters that are not placed in HICs are placed in suitability-sized containers meeting DOT requirements.

The estimated shipped waste volumes from processing DAWs are presented in Table 11.4-2.

11.4.2.2.4 Container Storage Subsystem

On-site storage space for a six-months volume of packaged waste is provided. Packaged waste includes HICs, shielded filter containers, 55 gallon (208 liter) drums, and other shipping containers as necessary. The container storage schemes and sequencing is shown in Figure 11.4-1.

PRELIMINARY

11.4.2.2.5 Mixed Waste Processing

To the greatest extent practicable, all discarded chemicals (including those classified as EPA hazardous) will be kept out of the Radioactive Waste Management System. Mixed waste volumes generated at ESBWR facilities are anticipated to be less than or equal to the volumes provided in Table 11.4-2. Mixed waste is collected primarily in 55 gallon (208 liters) collection drums and sent offsite to an appropriately permitted vendor processor. However, should circumstances dictate the storage or disposal of larger quantities of mixed waste, other approved containers, such as HICs, or use of multiple approved containers can be used. Storage and disposal of mixed waste is in accordance with the facility's NRC license, DOT transportation regulations, EPA mixed waste regulations, state and local regulations and associated permits.

11.4.2.3 Detailed System Component Description

The major components of the SWMS are as follows.

11.4.2.3.1 Pumps

Typically two types of pumps are utilized in the SWMS. The SWMS Processing pumps are centrifugal pumps constructed of materials suitable for the intended service. Pump codes are per the noted requirements of Table 3.2-1 for K20 Solid Waste Management Systems and Table 11.2-1.

Air-operated diaphragm type pumps are utilized in dewatering stations.

11.4.2.3.2 Tanks

The SWMS tanks are sized for normal plant waste volumes with sufficient excess capacity to accommodate equipment downtime and expected maximum volumes that may occur. The tanks are constructed of stainless steel to provide a low corrosion rate during normal operation. They are provided with mixing eductors and/or air spargers. The capability exists to sample all SWMS tanks. All SWMS tanks are vented to radwaste ventilation. The SWMS tanks are designed in accordance with ASME BPVC, Div. 1 or Div. 2, American Petroleum Institute (API) 620, API 650, or AWWA D-100.

Tank codes are per the noted requirements of Table 3.2-1 for K20 Solid Waste Management Systems.

11.4.2.3.3 Piping

Piping used for hydraulic transport of slurries such as ion exchange resins, filter backwash (sludge), and waste tank sludge are specifically designed to assure trouble-free operation. Pipe flow velocities are sufficient to maintain a flow regime appropriate to the slurry being transported (ion exchange resins, filter backwash, RO concentrate, or tank sludge). An adequate water/solids ratio is maintained throughout the transfer. Slurry piping is provided with manual and automatic flushing with a sufficient water volume to flush the pipe clean after each use.

Piping codes are in accordance with RG 1.143 for Solid Waste Management Systems. Additionally, piping shielding design features are provided in accordance with RG 8.8, Position 2.

PRELIMINARY

11.4.2.3.4 Ventilation

Makeup and exhaust ventilation is described in Subsection 9.4.3.

11.4.2.3.5 SWMS Processing Subsystem

The SWMS Processing Subsystem is designed to be readily replaced. This section includes requirements to be included in the replacement of the process systems throughout the life of the ESBWR.

Solid radwaste processing is performed using a Processing Subsystem that is described in Subsection 11.4.2.2.2. A design is provided in Figure 11.4-3. The Processing Subsystem is anticipated to be modernized as more effective technologies are discovered and proven throughout the life of plant operation. The Processing Subsystem works in conjunction with other portions of SWMS radwaste equipment and are sized according to physical attributes and processing capability. The COL Applicant ensures Processing Subsystems, structures and component operations and testing complies with the requirements of RG 1.143 (Reference 11.4-3) and RG 8.8 (Reference 11.4-4) (COL 11.4-1-A). The COL Applicant shall evaluate Processing Subsystems compliance with the guidance and information in IE Bulletin 80-10 (Reference 11.4-19), May 6, 1980 for the express purpose of identifying and rectifying connections that are considered as non-radioactive, but could become radioactive through interfaces with radioactive systems, (i.e., a non-radioactive system that could become contaminated due to leakage, valving errors or other operating conditions in radioactive systems) (COL 11.4-2-A). The COL Applicant will fully describe a Process Control Program (PCP) (Reference 11.4-20) per 10 CFR 20, Appendix G (Reference 11.4-9) and 40 CFR 190 (Reference 11.4-18), including waste classification as A, B, C per 10 CFR 61.55 (Reference 11.4-16), and 10 CFR 61.56 (Reference 11.4-17) (COL 11.4-3-A).

11.4.3 Safety Evaluation

The SWMS has no safety-related function. There is no liquid plant discharge from the SWMS. Failure of the subsystem does not compromise any safety-related system or component nor does it prevent shutdown of the plant. No interface with the safety-related electrical system exists.

11.4.4 Testing and Inspection Requirements

The SWMS is given a pre-operational test as discussed in Chapter 14. Thereafter, portions of the subsystems are tested as needed.

During initial testing of the system, the pumps and the other equipment are performance tested to demonstrate conformance with design flows and process capabilities. An integrity test is performed on the system upon completion.

Provisions are made for periodic inspection of major components to ensure capability and integrity of the subsystems.

The quality assurance program for design, fabrication, procurement, and installation of the solid radioactive waste system is in accordance with the overall quality assurance program described in Chapter 17.

PRELIMINARY

11.4.5 Instrumentation Requirements

The SWMS is operated and monitored from the radwaste control room or local operating stations within the facility. Major system parameters, i.e., tank levels, process flow rates, etc., are indicated (recorded and alarmed as required) to provide operational information and performance assessment. Key system alarms are repeated in the main control room. Instruments, including back flushing provisions, are located in low radiation areas when possible, as described in Subsection 12.3.1.1.2. These back flushing provisions are designed in accordance with IE Bulletin 80-10 (Reference 11.4-19).

11.4.6 COL Information

11.4-1-A SWMS Processing Subsystem Regulatory Guide Compliance

The COL Applicant ensures that SWMS Processing Subsystems, structures and component operations and testing comply with the requirements of RG 1.143 (Reference 11.4-3) and RG 8.8 (Reference 11.4-4) (Subsection 11.4.2.3.5).

11.4-2-A Compliance with IE Bulletin 80-10

The COL Applicant shall evaluate SWMS Processing Subsystems compliance with the guidance and information in IE Bulletin 80-10, (Reference 11.4-19), May 6, 1980 for the express purpose of identifying and rectifying connections that are considered non-radioactive, but could become radioactive through interfaces with radioactive systems, i.e., a non-radioactive system that could become contaminated due to leakage, valving errors or other operating conditions in radioactive systems (Subsection 11.4.2.3.5).

11.4-3-A Process Control Program

The COL Applicant will fully describe a Process Control Program (Reference 11.4-20) per 10 CFR 20, Appendix G (Reference 11.4-9) and 40 CFR 190 (Reference 11.4-18), including waste classification as A, B, C per 10 CFR 61.55 (Reference 11.4-16), and 10 CFR 61.56 (Reference 11.4-17). The milestone for implementation of the PCP is provided in the COL information included in Section 13.4 (Subsection 11.4.2.3.5).

The COL Applicant will provide a milestone for full program implementation (Section 13.4).

11.4-4-A Temporary Storage Facility

The inclusion of a temporary storage facility and an overall site management plan per NUREG-0800 Standard Review Plan 11.4 (Reference 11.4-1), Rev 3 March 2007, Appendix 11.4-A may be required (Subsection 11.4.1).

11.4-5-A Compliance with Part 20.1406

The COL Applicant is responsible for including site-specific information describing how the implementation of operating procedures for the SWMS Processing Subsystems will address the requirements of 10 CFR 20.1406 (Reference 11.4-7). Specifically the operational procedures of the SWMS Process Subsystems should minimize, to the extent practicable, contamination of the facility and the environment, facilitate decommissioning, and minimize the generation of radioactive wastes. This information is placed in Subsection 12.3.1.5 (Subsection 11.4.1).

PRELIMINARY

11.4.7 References

11.4-1 NUREG-0800, Standard Review Plan, 11.4 "Solid Waste Management System," Rev. 3 – March 2007 and BTP – ETSB 11-3 "Design Guidance for Solid Radioactive Waste Management Systems Installed in Light-Water-Cooled Nuclear Power Reactor Plants."

11.4-2 (Deleted)

11.4-3 Nuclear Regulatory Commission, Regulatory Guide 1.143, "Design Guidance for Radioactive Waste Management Systems, Structures, and Components Installed in Light-Water-Cooled Nuclear Power Plants," Revision 2, November 2001.

11.4-4 Nuclear Regulatory Commission, Regulatory Guide 8.8, "Information Relevant to Ensuring that Occupational Radiation Exposures at Nuclear Power Stations Will Be as Low as Is Reasonably Achievable," , Revision 3, June 1978.

11.4-5 Nuclear Regulatory Commission, Regulatory Guide 8.10, "Operating Philosophy for Maintaining Occupational Radiation Exposures as Low as Is Reasonably Achievable," Revision 1-R, May 1977.

11.4-6 Title 10 Code of Federal Regulations, Part 20.1302 "Compliance with dose limits for individual members of the public."

11.4-7 Title 10 Code of Federal Regulations, Part 20.1406 "Minimization of contamination."

11.4-8 Title 10 Code of Federal Regulations, Part 20 Appendix B "Annual Limits on Intake (ALIs) and Derived Air Concentrations (DACs) of Radionuclides for Occupational Exposure; Effluent Concentrates; Concentrations for Release to Sewage."

11.4-9 Title 10 Code of Federal Regulations, Part 20 Appendix G " Requirements for Transfers of Low Level Radioactive Waste Intended for Disposal at Licensed Land Disposal Facilities and Manifests."

11.4-10 Title 10 Code of Federal Regulations, Part 50.34a "Design Objectives for Equipment to Control Releases of Radioactive Material in Effluents," and 52.47 "Contents of Applications; technical information."

11.4-11 (Deleted)

11.4-12 Title 10 Code of Federal Regulations, Part 50 Appendix A GDC 60 "General Design Criteria for Nuclear Power Plants, Control of Releases of Radioactive Materials to the Environment."

11.4-13 Title 10 Code of Federal Regulations, Part 50 Appendix A GDC 61 "General Design Criteria for Nuclear Power Plants, Fuel Storage and Handling and Radioactivity Control."

11.4-14 Title 10 Code of Federal Regulations, Part 50 Appendix A GDC 63 "General Design Criteria for Nuclear Power Plants, Monitoring Fuel and Waste Storage."

11.4-15 Title 10 Code of Federal Regulations, Part 50 Appendix A GDC 64 "General Design Criteria for Nuclear Power Plants, Monitoring Radioactivity Releases."

11.4-16 Title 10 Code of Federal Regulations, Part 61.55 "Waste classification."

PRELIMINARY

11.4-17 Title 10 Code of Federal Regulations, Part 61.56 "Waste characteristics."

11.4-18 Title 40 Code of Federal Regulations, Part 190 "Environmental Radiation Protection Standards For Nuclear Power Operations."

11.4-19 Inspection and Enforcement, Bulletin 80-10 "Contamination of Nonradioactive System and Resulting Potential for Unmonitored, Uncontrolled Release of Radioactivity to Environment," May 6, 1980.

11.4-20 Generic Letter 89-01, January 31, 1989, specifically, Enclosure 3, Section 6.13 "Process Control Program (PCP)."

11.4-21 Title 10 Code of Federal Regulations, Part 50 Appendix I, "Numerical Guides for Design Objectives and Limiting Conditions for Operation to Meet the Criterion "As Low as is Reasonably Achievable" for Radioactive Material in Light-Water-Cooled Nuclear Power Reactor Effluents."

11.4-22 Title 10 Code of Federal Regulations, Part 71, "Packaging and Transportation of Radioactive Material."

11.4-23 (Deleted)

11.4-24 Title 49 Code of Federal Regulations, Part 171 "General information, regulations, and definitions."

11.4-25 Title 49 Code of Federal Regulations, Part 180 "Continuing qualification and maintenance of packaging."

11.4-26 Title 10 Code of Federal Regulations, Part 20.2007 "Compliance with environmental and health protection regulations."

11.4-27 (Deleted)

PRELIMINARY

Table 11.4-1

SWMS Component Capacities

Equipment Description	Type	Quantity	Nominal Capacity* Liter (Gal)
Tanks			
High Activity Resin Holdup Tank	Vertical, Cylindrical	1	70,000 (18,494)
Low Activity Resin Holdup Tank	Vertical, Cylindrical	1	70,000 (18,494)
Condensate Resin Holdup Tank	Vertical, Cylindrical	1	70,000 (18,494)
Low Activity Phase Separator	Vertical, Cylindrical	1	55,000 (14,531)
High Activity Phase Separator	Vertical, Cylindrical	1	12,000 (3,170)
Concentrated Waste Tank	Vertical, Cylindrical	1	60,000 (15,852)
Pumps			
High Activity Decant Pump	Horizontal, Centrifugal	2	333L/min (88gpm)
Low Activity Decant Pump	Horizontal, Centrifugal	2	333L/min (88gpm)
High Activity Resin Transfer Pump	Horizontal, Centrifugal	2	379L/min (100gpm)
Low Activity Resin Transfer Pump	Horizontal, Centrifugal	2	379L/min (100gpm)
Concentrated Waste Pump	Horizontal, Centrifugal	2	1,333L/min (352gpm)
Condensate Resin Transfer Pump	Horizontal, Centrifugal	2	379L/min (100gpm)
Process Equipment			
Dewatering Equipment Fill Head	N/A	2	-
Dewatering Pump	Diaphragm	2	75L/min (20gpm)

* For tanks, nominal capacity refers to the operating tank capacity. Nominal capacity for pumps is in liters/min (gallons/min).

PRELIMINARY

Table 11.4-2

Annual Shipped Waste Volumes♦

Waste Type	Estimated Annual Waste Generation m^3/yr (ft^3/yr)	Estimated Shipped Volume* m^3/yr (ft^3/yr)
Dry Active Wastes (DAW)		
Combustible waste:	225 (7,951)	225 (7,951)
Compactable waste:	38 (1,343)	38 (1,343)
Other waste:	100 (3,534)	100 (3,534)
DAW Total	363 (12,827)	363 (12,827)
Wet Solid Wastes		
RWCU Spent Bead Resin:	7.6 (269)	7.6 (269)
FAPCS Spent Bead Resin:	8.0 (283)	8.0 (283)
Condensate Purification System Spent Bead Resin:	33.8 (1,194)	33.8 (1,194)
LWMS Spent Bead Resin:	5.4 (191)	5.4 (191)
Condensate Purification System Filter Sludge:	5.2 (184)	5.2 (184)
LWMS Filter Sludge:	0.8 (28.3)	0.8 (28.3)
LWMS Concentrated Waste◊:	50 (1,766)	25 (883)
Wet Solid Waste Total	110.8 (3,915)	85.8 (3,032)
Mixed Waste:	0.416 (14.71)	0.416 (14.71)

♦ If waste is compacted using a third party service, the estimated annual shipped waste volume provided in Table 11.4-2 may be reduced depending on the type and level of waste and the waste compacting equipment and resulting compaction performance.

* Value is a long-term average of resins and sludges in the dewatered condition and all other wastes packaged for shipment. The values for resins and sludges in the above table are volumes packaged for shipment.

◊ The volume reduction is based on LWMS Concentrated Waste moisture removal. An estimate of 50% volume reduction is thought to be conservative based on current moisture removal technologies, such as drying and membrane-based operations.

PRELIMINARY

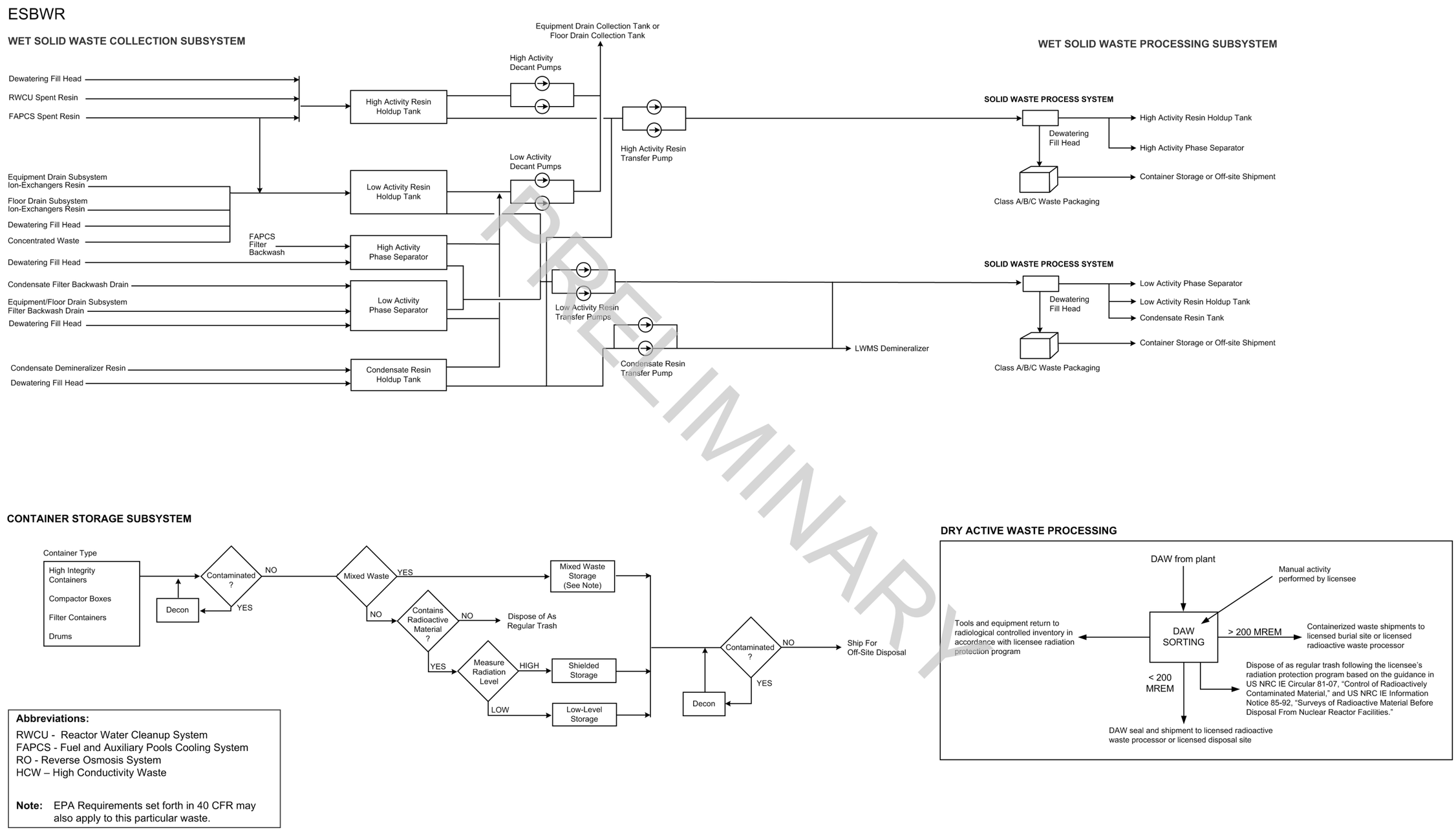

Figure 11.4-1. Solid Waste Management System Process Diagram

PRELIMINARY

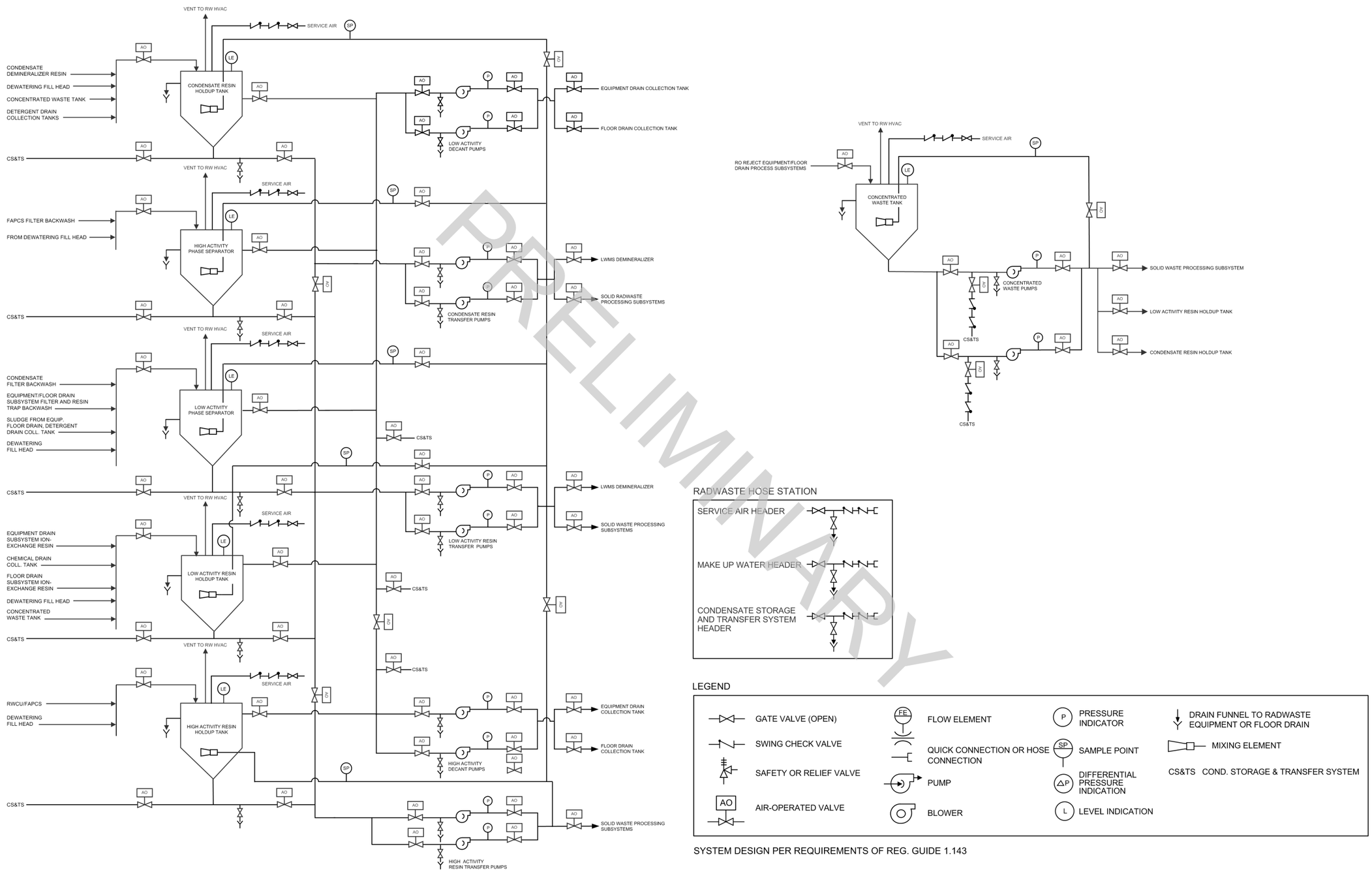

Figure 11.4-2. SWMS Collection Subsystem

PRELIMINARY

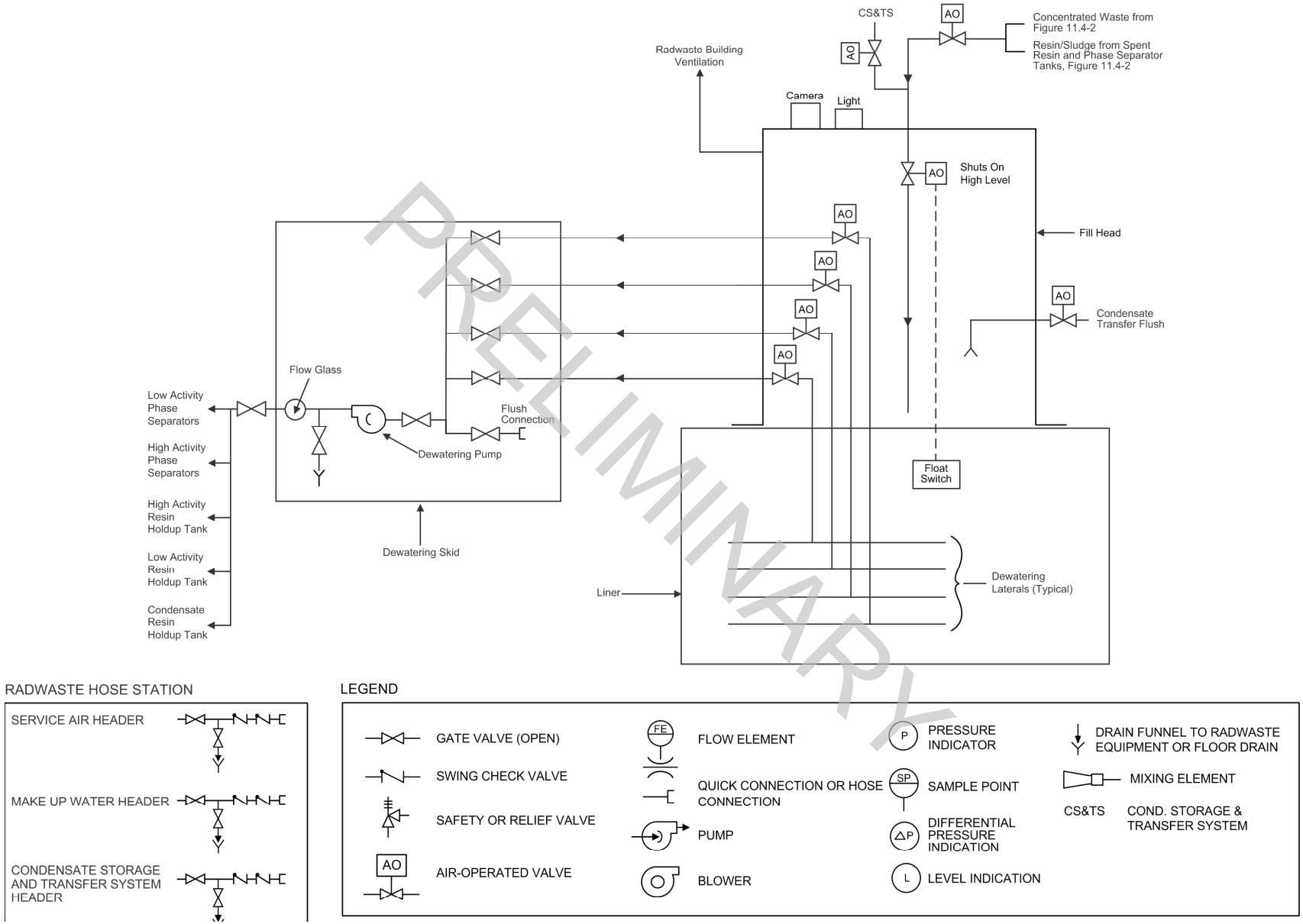

PRELIMINARY

Figure 11.4-3. SWMS Processing Subsystem

PRELIMINARY

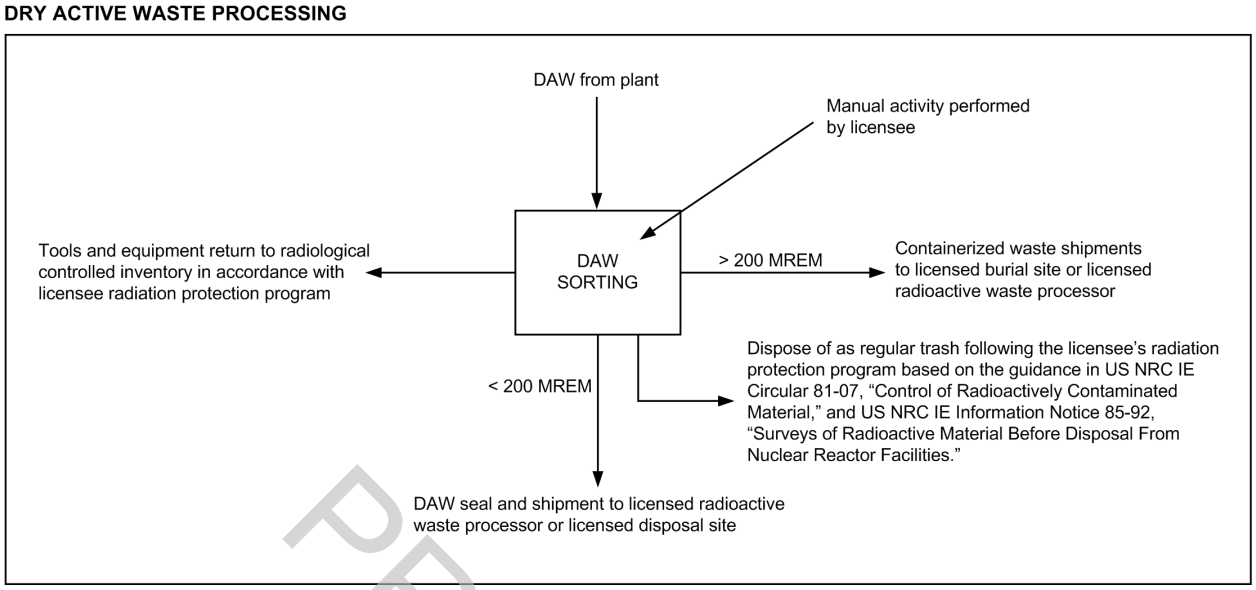

Figure 11.4-4. Dry Active Waste Processing

PRELIMINARY

11.5 PROCESS RADIATION MONITORING SYSTEM

The Process Radiation Monitoring System (PRMS) allows for determining the content of radioactive material in various gaseous and liquid process and effluent streams. The design objective and criteria are based on the following requirements:

- Radiation instrumentation required for safety and protection, and
- Radiation instrumentation required for monitoring and plant operation.

All radioactive release points/paths within the plant are identified and monitored by this system. All other release points/paths of the plant are located in clean areas where radiological monitoring is not required.

This system provides continuous monitoring and display of the radiation measurements during normal, abnormal, and accident conditions.

11.5.1 Design Bases

11.5.1.1 Design Objectives

11.5.1.1.1 Radiation Monitors Required for Safety and Protection

The Radiation Monitoring Subsystems initiates appropriate protective actions to limit the potential release of radioactive materials to the environment if predetermined radiation levels are exceeded in major process/effluent streams. Another objective is to provide plant personnel with indication and alarm of the radiation levels in the major process/effluent streams.

The following Radiation Monitoring Subsystems of the PRMS provide signals that initiate automatic safety-related functions:

- Reactor Building HVAC exhaust,
- Refuel Handling Area HVAC exhaust,
- Control Room Habitability Area HVAC Subsystem (CRHAVS),
- Isolation Condenser Vent Exhaust,
- Fuel Building (FB) General Area HVAC,
- Fuel Building Fuel Pool HVAC, and
- Containment Purge Exhaust.

11.5.1.1.2 Radiation Monitors Required for Plant Operation

These Radiation Monitoring Subsystems provide plant personnel with measurements of the content of radioactive material in important gaseous and liquid effluent and process streams. Additional functions include initiation of discharge valve isolation on the offgas or liquid radwaste systems if predetermined release rates would be exceeded, and provision for sampling at certain radiation monitor locations to allow determination of specific radionuclide content.

PRELIMINARY

The following PRMS Subsystems are provided to meet the above design objectives:

- Monitoring Gaseous Effluent Streams;
  - RB/FB Stack,
  - TB Stack,
  - RW Stack,
  - TB Normal Ventilation Air HVAC,
  - TB Compartment Area Air HVAC,
  - Radwaste Building Ventilation Exhaust,
  - Main Turbine Gland Seal Steam Condenser Exhaust,
  - FB Combined Ventilation Exhaust, and
  - TB Combined Ventilation Exhaust.
- Monitoring Liquid Effluent Streams;
  - Liquid Radwaste Discharge.
- Monitoring Gaseous Process Streams;
  - MSL,
  - Offgas Pre-treatment,
  - Offgas Post-treatment,
  - Charcoal vault ventilation, and
  - Drywell Fission Product.
- Monitoring Liquid Process Streams; and
  - Reactor Component Cooling Water Intersystem Leakage, and
  - Drywell sumps LCW/HCW Discharge.
- Monitoring Gaseous Intake Streams.
  - Technical Support Center (TSC) HVAC Air Intake.

11.5.2 System Design Bases and Criteria

The instrumentation used in the subsystems of the PRMS is designed to be in conformance with the relevant requirements and guidelines of:

- 10 CFR 20.1302 (Reference 11.5-1), 10 CFR 20.1301(e) (Reference 11.5-22), 10 CFR 20 Appendix B (Reference 11.5-16), 10 CFR 20.1406 (Reference 11.5-23), 10 CFR 50.34a and 10 CFR 52.47 (Reference 11.5-2), 10 CFR 50.36a (Reference 11.5-4).
- 10 CFR 50, Appendix A, GDC 19 (Reference 11.5-17), 60 (Reference 11.5-5), 63 (Reference 11.5-6), and 64 (Reference 11.5-7).

PRELIMINARY

- 10 CFR 50 Appendix I (Reference 11.5-8).
- 10 CFR 50.34(f)(2)(viii), 10 CFR 50.34(f)(2)(xvii), 10 CFR 50.34(f)(2)(xxvii), and 10 CFR 50.34(f)(2)(xxviii) (Reference 11.5-3).
- Regulatory Guides 1.21 (Reference 11.5-9), 1.45 (Reference 11.5-10), 1.97 (Reference 11.5-11), 4.15 (Reference 11.5-12).
- Standard Review Plan 11.5. (Reference 11.5-18) of NUREG-0800.
- NUREG-0737 (Reference 11.5-15), Item II.F.1, Attachments 1 and 2.
- ANSI/HPS N13.1-1999 (Reference 11.5-13).
- ANSI/Institute of Electrical and Electronic Engineers (IEEE) N42.18-2004 (Reference 11.5-19).
- BTP HICB-10 (Reference 11.5-26).

Radiation monitoring is provided during normal reactor operations, anticipated operational occurrences, and post-accident conditions.

The safety-related Process Radiation Monitoring Subsystems are classified Safety Class 2, Seismic Category I. These subsystems conform to the quality assurance requirements of 10 CFR 50 Appendix B (Reference 11.5-20).

11.5.2.1 Radiation Monitors Required for Safety

The design criteria for the safety-related functions as defined in Subsection 11.5.1.1 include the following functional requirements:

- Withstand the effect of natural phenomena (e.g., earthquakes) without loss of capability to perform their functions.
- Perform the intended safety-related functions in the environment resulting from normal and abnormal conditions (e.g., loss of HVAC and isolation events).
- Meet the reliability, testability, independence, and failure mode requirements of engineered safety-related features.
- Provide continuous output of radiation levels to the main control room.
- Permit checking of the operational availability of each channel during reactor operation with provisions for calibration function and instrument checks.
- Ensure an extremely high probability of accomplishing safety-related functions in the event of anticipated operational occurrences.
- Initiate protective action when operational limits are exceeded.
- Annunciate the high radiation levels in the main control room to alert operating personnel of abnormal conditions.
- Insofar as practical, provide self-monitoring of the radiation monitors to the extent that power failure or equipment failure causes annunciation in the main control room and initiation of the required protective action.

PRELIMINARY

- Register full-scale output if radiation detection exceeds full scale.
- Use instrumentation compatible with anticipated radiation levels and ranges expected under normal, abnormal and accident conditions, per RG 1.97 (Reference 11.5-11). Provide expanded ranges to take into consideration additional source term resulting from damaged core. Provide overlapping sensor/instrument ranges where the desired accuracy is not achieved with a single sensor/instrument.
- Use redundant divisional channels that satisfy the separation and single failure criteria, for the initiation of safety-related functions.

11.5.2.2 Radiation Monitors Required for Plant Operation

The design criteria for operational radiation monitoring includes the following functional requirements:

- Provide continuous indication of radiation levels in the main control room.
- Annunciate the high radiation levels in the main control room to alert operating personnel to the abnormal conditions.
- Insofar as practical, provide self-diagnosis of the radiation monitors to the extent that power failure or equipment failure causes annunciation in the main control room and isolation of the effluents paths as required.
- Monitor a representative sample of the bulk stream or volume.
- Incorporate provisions for calibration and functional checks.
- Use instrumentation compatible with anticipated radiation levels and ranges expected under normal, abnormal and accident conditions (Regulatory Guide 1.97). Provides expanded ranges to take into consideration additional source term from damaged core. Provide overlapping sensor/instrument ranges where the desired accuracy is not achieved with a single sensor/instrument.
- Register full-scale output if radiation detection exceeds full scale.
- Monitor selected non-radioactive systems for intrusion of radioactivity into the system.

11.5.3 Subsystem Description

11.5.3.1 Radiation Monitors Required for Safety

The design description of each PRMS Subsystem's radiological monitoring and sampling function, as identified in Subsection 11.5.1.1.1, is provided in this section under its designated name. The types of instrumentation, together with pertinent parameters for each subsystem, are presented in Tables 11.5-1, 11.5-2, and 11.5-4. Figure 11.5-1 in conjunction with Table 11.5-3 provides radiation detector location diagrams.

Figure 11.5-2 shows the block diagram of a Safety-Related PRMS channel. Signal Conditioning Units (SCUs) are located in the proximity of the radiation detectors when practical or in the MCR back panel area. Displays for alarm and radiation level are provided at the SCUs, and also at the MCR console Video Display Units (VDUs). The Safety-Related Distributed Control and

Information System (Q-DCIS) receives signals from the SCUs, performs control functions, and also feeds the signals to the Nonsafety-Related Distributed Control and Information System (N-DCIS) for display, alarm, and data recording functions.

11.5.3.1.1 (Deleted)

11.5.3.1.2 Reactor Building HVAC Exhaust Radiation Monitoring Subsystem

This subsystem monitors the gross radiation level in the exhaust duct of the RB. The principal path that this subsystem monitors is exhaust from the contaminated area, which is served by Reactor Building Contaminated Area HVAC Subsystem (CONAVS). A high activity level in the ductwork could be due to fission gases from a leak or an accident.

The subsystem consists of four redundant instrument channels. Each channel consists of a gamma-sensitive detector and a Main Control Room (MCR) radiation monitor.

The detectors are located adjacent to the exhaust ducting upstream of the ventilating system isolation valves and monitor the Reactor Building HVAC exhausts. The detectors are physically located upstream of the ventilation exhaust duct isolation dampers such that closure of the dampers can be accomplished prior to exceeding radioactive effluent limits imposed by 10 CFR 20, Appendix B.

The Leak Detection and Isolation System receives the individual channel signals and compares the signal level to the setpoint trips.

Any two-out-of-four channel trips result in the closure of the RB ventilation dampers and stoppage of the Reactor Building HVAC fans.

Trip circuits initiate their respective alarms in the MCR.

A single channel may be taken out-of-service for testing without affecting the protective functionality of the remaining channels. Two-out-of-three channel trips cause protective actions in the test mode.

Each channel has a monitor failure alarm in the MCR.

The range of channel measurement and display is as shown in Table 11.5-1 and Table 11.5-2. The range is selected to provide sufficient coverage for radioactivity released during normal operation up to the amount associated with an accident and the subsequent ventilation flow into the RB Ventilation.

11.5.3.1.3 Refuel Handling Area HVAC Exhaust

This subsystem monitors the gross radiation level in the refuel handling area and pool area HVAC ventilation exhaust duct that is part of the Reactor Building Refueling and Pool Area HVAC Subsystem (REPAVS).

The subsystem consists of four redundant instrument channels. Each channel consists of a gamma-sensitive detector and a MCR radiation monitor.

The detectors are located around the refuel area and are physically and electrically separated from one another.

PRELIMINARY

The Leak Detection and Isolation System receives the individual channel signals and compares the signal level to the setpoint trips.

Any two-out-of-four channel trips result in the closure of the RB ventilation dampers and stoppage of the Reactor Building HVAC fans.

Trip circuits initiate their respective alarms in the MCR.

A single channel may be taken out-of-service for testing without affecting the protective functionality of the remaining channels. Two-out-of-three channel trips cause protective actions in the test mode.

Each channel has a monitor failure alarm in the MCR.

The range of channel measurement and display is shown in Table 11.5-1 and Table 11.5-2. The range is selected to provide sufficient coverage for radioactivity released during normal operation up to the amount associated with a refueling accident and the subsequent flow into the RB Ventilation system.

11.5.3.1.4 Control Room Habitabililty Area HVAC Radiation Monitoring Subsystem

The Control Room Habitability Area HVAC radiation monitoring subsystem consists of four redundant monitors for the Control Building Air Intake and four redundant monitors for each of the two redundant Emergency Filter Unit Outlets.

The Air Intake monitors are provided to detect the gross radiation level in the normal outdoor air intake supply and to automatically initiate closure of the outdoor air intake and the exhaust dampers, the restroom exhaust, and startup the emergency air filtration system. The EFU outlet monitors are provided to detect the gross radiation level coming from the in-service EFU and to automatically initiate isolation of the operating EFU and to place the standby EFU in service.

The radiation monitors for the air intake consist of four redundant channels to monitor the air intake to the building. Each radiation channel consists of a gamma sensitive detector and a radiation monitor that is located in the MCR.

Any two-out-of-four channel trips result in the closure of the Control Building Air Intake and exhaust dampers and starting the Emergency air filtration system.

Trip circuits initiate their respective alarms in the MCR.

A single channel may be taken out-of-service for testing without affecting the protective functionality of the remaining channels. Two-out-of-three channel trips cause protective actions in this case.

Each channel has a monitor failure alarm in the MCR.

The radiation monitors for the EFU outlets consist of four redundant channels on each filter train outlet to monitor the filtered air to the Control Building Habitability Area. Each radiation channel consists of a gamma sensitive detector and a radiation monitor that is located in the MCR.

Any two-out-of-four channel trips result in the automatic shutdown of the in-service EFU and automatic start-up of the standby EFU.

Trip circuits initiate their respective alarms in the MCR.

PRELIMINARY

A single channel may be taken out-of-service for testing without affecting the protective functionality of the remaining channels. Two-out-of-three channel trips cause protective actions in this case.

Each channel has a monitor failure alarm in the MCR.

The monitors meet the requirements for safety-related components to provide appropriate reliability. The system warns of the presence of significant air contamination either in the inlet air to the Control Room Habitability Area from either the normal air intake or the filtered air exhaust and provides isolation of the Control Building from the normal intake and operation through the emergency filtration system.

The range of channel measurement and display is shown in Table 11.5-1 and Table 11.5-2. The range is selected to cover normal operation and be sensitive enough to initiate isolation of the MCR prior to exceeding the 10 CFR 50 Appendix A GDC 19 (Reference 11.5-17) guidelines of 0.05 Sieverts total effective dose equivalent (TEDE).

11.5.3.1.5 (Deleted)

11.5.3.1.6 Isolation Condenser Vent Exhaust

This subsystem monitors the gross radiation from the exhaust of the air from the atmospheric pool area above each isolation condenser. In normal plant operation, the steam from the reactor is directed to the main condenser. The isolation condensers remain in a standby mode, with the path to outside the building without any air flow. This path only has flow through it when the isolation condensers are in operation. The isolation condenser pool (Reference Subsection 5.4.6) contains non-radioactive demineralized water supplied from the makeup water system (Reference Subsection 9.2.3). Boil-off steam formed in the compartments containing Isolation Condenser (IC) heat exchangers are non-radioactive and are maintained at a slight positive pressure relative to station ambient. The air space above the pool that contains the isolation condenser is exhausted to atmosphere through large-diameter discharge vents after first passing through a large face area passive-type steam dryer. Moisture removed by the dryer from the boil-off steam is ducted back to the IC pool.

Each ventilation path, from the air space above the pool in which the isolation condenser is submerged, is monitored for radioactivity by a series of radiation monitors. Upon detection of radioactivity escaping the pool, as might be the case from a leak from the isolation condenser, the radiation monitors initiate closure of the containment isolation valves for the affected condenser. A closure setpoint is calculated to ensure isolation of the condenser prior to exceeding the applicable offsite regulatory guidelines (Subsections 11.5.4.4 and 11.5.4.5).

The subsystem consists of sixteen channels (four per isolation condenser vent) that are physically and electrically independent of each other.

The subsystem for each isolation condenser vent consists of four redundant instrument channels. Each channel consists of a gamma-sensitive detector and a MCR radiation monitor.

The Leak Detection and Isolation System receives the individual channel signals and compares this same signal level to the setpoint trips.

Any two-out-of-four channel trips result in the closure of isolation valves in the steam line to this condenser and in the condensate return line from this condenser.

Trip circuits initiate their respective alarms in the MCR.

A single channel may be taken out-of-service for testing without affecting the protective functionality of the remaining channels. Two-out-of-three channel trips cause protective actions in the test mode.

Each channel has a monitor failure alarm in the MCR.

The range of channel measurement and display is shown in Table 11.5-1 and Table 11.5-2. The range is selected to provide sufficient coverage from normal operation up to, and several decades beyond, for radioactivity released prior to exceeding limits of 10 CFR 20 (Reference 11.5-21). Under normal operation, there should not be radioactivity exhausted from this path since there should be no leakage into the pool area.

11.5.3.1.7 Fuel Building General Area HVAC

This subsystem monitors the gross radiation level in the Fuel Building HVAC System (FBVS) exhaust duct for the general area. The system consists of four channels that are physically and electrically independent of each other. The subsystem monitors the radiation levels of the air exiting the FB general areas as well as the rooms with the fuel pool cooling and cleanup equipment.

The subsystem consists of four redundant instrument channels. Each channel consists of a gamma-sensitive detector and a MCR radiation monitor.

The individual channel signals are compared to the setpoint trips.

Any two-out-of-four channel trips result in the closing of the isolation dampers and tripping of the FB General Area fans.

Trip circuits initiate their respective alarms in the MCR.

A single channel may be taken out-of-service for testing without affecting the protective functionality of the remaining channels. Two-out-of-three channel trips cause protective actions in the test mode.

Each channel has a monitor failure alarm in the MCR.

The range of channel measurement and display is shown in Tables 11.5-1 and Table 11.5-2. The range is selected to provide sufficient coverage for radioactivity released during normal operation up to, and including several decades beyond, the amount associated with a refueling accident and the subsequent air flow into the FBVS.

11.5.3.1.8 Fuel Building Fuel Pool HVAC

This subsystem consists of a total of four channels that monitor the radiation level of the air exiting the FB Spent Fuel Storage Pool and equipment areas.

The subsystem consists of four redundant instrument channels. Each channel consists of a gamma-sensitive detector and a MCR radiation monitor.

The individual channel signals are compared to the setpoint trips.

PRELIMINARY

Any two-out-of-four channel trips result in the closing of the isolation dampers and tripping of the FB Fuel Pool Ventilation fans.

Trip circuits initiate their respective alarms in the MCR.

A single channel may be taken out-of-service for testing without affecting the protective functionality of the remaining channels. Two-out-of-three channel trips cause protective actions in the test mode.

Each channel has a monitor failure alarm in the MCR.

The range of channel measurement and display is addressed in Table 11.5-1 and 11.5-2. The range is selected to provide sufficient coverage for radioactivity released during normal operation up to, and including several decades beyond, the amount associated with a refueling accident and the subsequent air flow into the FBVS.

11.5.3.1.9 Containment Purge Exhaust

This subsystem monitors the gross radiation level in the exhaust duct leading from the primary containment.

The detectors are located adjacent to the exhaust ducting upstream of the ventilating system isolation valves. The detectors are physically located upstream of the ventilation exhaust duct isolation dampers such that closure of the dampers can be accomplished prior to exceeding radioactive effluent limits.

The subsystem consists of four redundant instrument channels. Each channel consists of a gamma-sensitive detector and a MCR radiation monitor.

The individual channel signal levels are compared to the setpoint trips.

Any two-out-of-four channel trips result in the closure of the Reactor Building HVAC isolation dampers and stoppage of the Reactor Building HVAC exhaust fans.

Trip circuits initiate their respective alarms in the MCR.

A single channel may be taken out-of-service for testing without affecting the protective functionality of the remaining channels. Two-out-of-three channel trips cause protective actions in the test mode.

Each channel has a monitor failure alarm in the MCR.

The range of channel measurement and display is addressed in Table 11.5-1 and Table 11.5-2.

11.5.3.2 Radiation Monitors Required for Plant Operation

The design description of each PRMS Subsystem's radiological monitoring and sampling function identified in Subsection 11.5.1.1.2 is provided in this section. The types of instrumentation, together with pertinent parameters for each subsystem, are presented in Tables 11.5-1, 11.5-2, and 11.5-4. Figure 11.5-1 in conjunction with Table 11.5-3 provides radiation detector location diagrams.

Figure 11.5-2 shows the block diagram of a nonsafety-related PRMS channel. SCUs are mounted locally. Displays for alarm and radiation level are provided at the SCUs, and also at the

PRELIMINARY

MCR console VDUs. N-DCIS receives signals from the SCUs and performs control, display, alarm, and data recording functions. Information on these monitors is presented in Table 11.5-2.

11.5.3.2.1 Offgas Pre-treatment

This subsystem monitors radioactivity in the main turbine condenser offgas after it has passed through the Offgas condenser and moisture separator/cooler. The single channel monitor detects the gross radiation level that is attributable to the fission gases that are produced in the reactor and then transported with steam through the turbine to the main turbine condenser.

A continuous sample is extracted from the offgas pipe, then passed through a sample chamber and a sample panel before being returned to the suction side of the SJAE. The sample chamber is a stainless steel pipe that is internally polished to minimize plate-out. It can be purged with room air to check detector response to background radiation. Sample line flow is measured and indicated on the sample panel. A gamma-sensitive detector, positioned on the sample chamber, is connected to a local radiation monitor.

The radiation level reading can be directly correlated to the concentration of the noble gases in the sample chamber by obtaining a grab sample at the sample panel. The sample is then removed and the sample is analyzed with a multi-channel gamma pulse height analyzer to determine the concentration of the various noble gas radionuclides. A correlation between the observed activity and the monitor reading permits calibration of the monitor.

The range of channel measurement and display is shown in Table 11.5-1 and Table 11.5-2. The range is selected to provide indication over an offgas release rate of approximately 3.7E 2 MBq/s (1.0E4 μCi/s) up to approximately 3.7E 8 MBq/s (1.0E10 μCi/s) (after a 30 minute decay), referenced to the noble gases listed in Table 11.1-1, Table 11.1-2a and Table 11.1-2b.

11.5.3.2.2 Offgas Post-treatment

This subsystem monitors radioactivity for halogens, particulates and noble gas releases during normal and accident conditions in the offgas piping downstream of the OGS charcoal adsorbers and upstream of the OGS discharge valve. A continuous sample is extracted from the OGS piping, passed through two offgas post-treatment samplers for monitoring and sampling, and returned to the OGS piping. One sampler contains provisions for continuous gaseous, particulate and halogen radioactivity monitoring of the offgas post treatment process. The second sampler contains only provisions for continuous gaseous monitoring. Sampling is performed in accordance with ANSI/HPS N13.1 (Reference 11.5-13). Automatic compensation for variation in stack flow is provided to maintain the sample panel flow proportional to the main flow. Two local radiation monitors, connected to gamma-beta sensitive radiation detectors, analyze and visually display the measured radiation level.

The sample panel shielded chambers can be purged with room air to check detector response to background radiation. Sample line flow is measured and indicated on the sample panel. A remotely operated check source for each detector assembly is used to check operability of the channel.

Each radiation monitor has trip circuits that actuate corresponding main control room annunciators.

PRELIMINARY

The trip outputs are used to initiate closure of the OGS discharge and Charcoal Bed bypass valves. The trip setpoint is set so that valve closure is initiated prior to exceeding 10 CFR 20.1302 (Reference 11.5-1) limits. A channel trip is also used to initiate alignment of the OGS flow valves to achieve treatment through the charcoal vault.

Provisions for grab sample collection are provided and can be used for isotopic analysis and monitor calibration.

Tritium sampling is also provided by the subsystem.

Abnormal flow, measured at the sample panel, is annunciated in the MCR.

The ranges of channel display are shown in Table 11.5-1 and Table 11.5-2. The ranges for noble gas detection are selected to cover an offgas release rate of approximately 3.7E-2 MBq/sec (1.0E0 µCi/s) to 3.7E4 MBq/sec (1.0E6 µCi/s). The ranges for particulate and iodine detection are selected to provide coverage from approximately 1/10 of the applicable 10 CFR 20 limits using Cs-137 and I-131, respectively, plus an additional six decades of coverage to the upper end. The upper range limit is set by the plant release limit, which in turn is set by plant unique factors such as site size, and meteorology.

The subsystem provides data for reports of gaseous releases of radioactive materials in accordance with Regulatory Guide 1.21.

11.5.3.2.3 Charcoal Vault Ventilation

The ventilation of the charcoal vault is monitored for gross gamma radiation level, in order to look for leakage from the charcoal tanks. A single instrument channel is used. The channel includes a gamma sensitive detector and a radiation monitor. The detector is located outside the charcoal vault on the HVAC exhaust line from the vault. The radiation monitor is located locally.

The range of channel measurement and display is shown in Table 11.5-1 and Table 11.5-2. This range is selected to span normal radiation background to beyond a point where it would have successfully indicated leakage from the charcoal vault into the ventilation duct. Under normal operation, the charcoal vault ventilation air flow should not have radioactivity in it.

11.5.3.2.4 Turbine Building Combined Ventilation Exhaust

This subsystem monitors the TB Combined Ventilation exhaust for halogens, particulates and noble gas releases during normal and accident conditions.

A representative sample is continuously extracted and passed through the sample panel for monitoring and sampling, and then returned to the TB Combined Ventilation Exhaust stream. Sampling is performed in accordance with ANSI/HPS N13.1 (Reference 11.5-13). Automatic compensation for variation in flow is provided to maintain the sample panel flow proportional to the main flow.

The radiation detector assembly consists of shielded gas chambers that house gamma-beta sensitive detectors and check sources. A local radiation monitor analyzes and visually displays the measured radiation level. The subsystem has provisions for purging the sample panel with room air to check detector response to background radiation level reading.

PRELIMINARY

Each sample chamber is equipped with a check source to test detector response, thus checking operability of the radiation channel.

The radiation monitor initiates trips for alarm indications on high radiation. Also, abnormal flow, measured at the sample panel, is annunciated in the MCR.

Provisions for grab sample collection are provided and can be used for isotopic analysis and monitor calibration.

Tritium grab sampling and monitoring is also provided by the subsystem.

The ranges of channel display are shown in Table 11.5-1 and Table 11.5-2. These ranges are selected to provide indication of isotopic effluent concentrations provided in 10 CFR 20 (Reference 11.5-21). The subsystem provides data for reports of airborne releases of radioactive materials in accordance with Regulatory Guide 1.21 (Reference 11.5-9).

11.5.3.2.5 Liquid Radwaste Discharge

This subsystem continuously monitors the radioactivity in the liquid radwaste during its discharge to the environment and stops the discharge on detection of a high radiation level.

Liquid waste can be discharged from the sample tanks containing liquids that have been processed through one or more treatment systems such as filtration, and ion exchange. During the discharge, the liquid is extracted from the liquid radwaste discharge process pipe, passed through a liquid sample panel that contains a detection assembly for radiation monitoring, and returned to the process pipe. The detection assembly consists of a detector mounted in a shielded sample chamber equipped with a check source. A local radiation monitor analyzes and visually displays the measured gross radiation level.

The sample panel chamber can be drained and flushed to allow assessment of background buildup. Sample line flow is measured and indicated on the sample panel. A check source can be used to check operability of the channel.

The radiation monitor has trip circuits that are used to stop the discharge to the environment.

The range of channel display is shown in Table 11.5-1 and Table 11.5-4. The liquid radwaste discharge radiation monitor provides data for reports of liquid releases of radioactive materials in accordance with Regulatory Guide 1.21 (Reference 11.5-9). This monitor is used to demonstrate compliance with the liquid effluent release concentration limits of 10 CFR 20.

11.5.3.2.6 Reactor Component Cooling Water Intersystem Leakage

This subsystem consists of two channels. Each Reactor Component Cooling Water (RCCW) heat exchanger train has its own radiation monitor. Each channel monitors for intersystem radiation leakage into the respective Reactor Component Cooling Water System (RCCWS) loop addressing the guidelines of RG 1.45 (Reference 11.5-10).

Each channel consists of a detector that is located on the downstream side of each RCCWS heat exchanger exit pipe. Each channel provides individual channel trips on high radiation level and downscale/inoperative indication for annunciation in the MCR.

Each RCCW radiation sampler is provided with a remotely controlled radioactive check source.

The range of channel display is shown in Table 11.5-1 and Table 11.5-4.

PRELIMINARY

11.5.3.2.7 Radwaste Building Ventilation Exhaust

This subsystem monitors the Radwaste Building ventilation exhaust for halogens, particulates and noble gas during normal and accident conditions. Each instrument channel consists of a local detector and a radiation monitor. The radiation monitor provides upscale and inoperative trips. Also, abnormal flow, measured at the sample panel, is annunciated in the MCR.

A sample, continuously extracted, passes through the panel and returns to the exhaust. Sampling is performed in accordance with ANSI/HPS N13.1 (Reference 11.5-13). Automatic compensation for variation in process flow is provided to maintain the sample panel flow proportional to the main flow.

Provisions for grab sample collection are provided and can be used for isotopic analysis and monitor calibration.

The subsystem has provisions for purging the sample panel with room air to check detector response to the background radiation level reading.

Tritium grab sampling and monitoring is also provided by the subsystem.

A remotely-operated gamma check source is provided for testing channel operability.

The trip signals are annunciated in the Radwaste Building General Area (RWBGA) and in the MCR. The ranges of channel display are shown in Table 11.5-1 and Table 11.5-2. The subsystem provides data for reports of airborne releases of radioactive materials in accordance with Regulatory Guide 1.21 (Reference 11.5-9).

11.5.3.2.8 Turbine Building Compartment Area Air HVAC

This subsystem monitors the air in the compartment area HVAC in the TB for gross radiation levels. Two channels provide monitoring. Each channel uses a gamma sensitive detector located internal to the monitored exhaust duct. The outputs from the detectors are fed into radiation monitors for display and annunciation. Each monitor provides alarm trips in the MCR on high radiation and when a monitor is inoperative.

The range of channel display is shown in Table 11.5-1 and Table 11.5-2.

11.5.3.2.9 Turbine Building Normal Ventilation Air HVAC

This subsystem monitors the normal ventilation air HVAC from the clean area in the TB for gross radiation levels. Two channels provide the monitoring. Each channel uses a gamma sensitive detector located internal to the monitored exhaust duct. The outputs from the detectors are fed into radiation monitors for display and annunciation. Each monitor provides alarm trips in the MCR on high radiation and when a monitor is inoperative.

The range of channel display is as shown in Table 11.5-1 and Table 11.5-2.

11.5.3.2.10 Main Turbine Gland Seal Steam Condenser Exhaust

This subsystem monitors the releases to the TB Combined Ventilation exhaust from the main turbine gland seal condenser system. The releases are continuously sampled and monitored for noble gases. The output signal is displayed in the MCR. The channel has a High or High-High alarm and an inoperative alarm.

PRELIMINARY

A grab sample of the flow path can be extracted for laboratory analysis. Samples of halogens and particulates can be collected on filters for periodic analysis.

The subsystem includes provisions for purging the sample panel with room air to check detector response to the background radiation level reading.

Also, abnormal flow, measured at the sample panel, is annunciated in the MCR.

A locally operated gamma check source is provided for testing channel operability.

The range of channel display is shown in Table 11.5-1 and Table 11.5-2.

11.5.3.2.11 Drywell Fission Product

This subsystem, consisting of two channels, one for noble gases and the other for particulates, continuously monitors noble gases and particulates in the drywell air space under normal operating conditions. The particulate measurement is used to demonstrate compliance with RG 1.45 (Reference 11.5-10) for leak detection.

Each radiation monitor provides High or High-High and inoperative alarms that are indicated in the MCR. Also, abnormal flow, measured at the sample panel, is annunciated in the MCR.

The range for the particulate of channel display is given in Table 11.5-1 and Table 11.5-2. This lower limit of detectability is sufficient to indicate the equivalent of 3.785 liters per minute (l gpm) leak rate (normal reactor water) within 60 minutes.

The range for the gaseous of channel display is given in Table 11.5-1 and Table 11.5-2.

A grab sample can be extracted for laboratory analysis. Samples of halogens and particulates can be collected on filters for periodic analysis.

The subsystem has a remotely controlled radioactive check source.

The subsystem includes provisions for purging the sample panel with room air to check detector response to the background radiation level reading.

11.5.3.2.12 Technical Support Center HVAC Air Intake

This subsystem continuously monitors the intake air ventilation duct of the TSC with a single gamma sensitive radiation monitor. Upon detection of radioactivity, the Air Handling Unit (AHU) outdoor air damper for the TSC is closed and the filter train fan is started.

This monitor provides High or High-High and inoperative alarms that are alarmed in the MCR.

The range of channel measurement and display is given in Table 11.5-1 and Table 11.5-2. The range is selected to cover the normal radiation background up to, and several decades beyond, the dose rate given in 10 CFR 50 Appendix A GDC 19 (Reference 11.5-17). Under normal conditions, only background radioactivity is anticipated at the TSC HVAC intake.

11.5.3.2.13 Stack Monitoring

The Stack Radiation Monitoring Subsystems consist of three separate building vent stack systems. These include the following individual vent stacks:

- RB/FB Stack that receives input from the Reactor building ventilation systems and the Fuel building ventilation systems.

- TB Stack that receives input from the Turbine building ventilation systems, the Off-Gas system, and the Gland Seal Condenser.
- RW Stack that receives input from the Radwaste building ventilation systems.

11.5.3.2.13.1 RB/FB Stack

The RB/FB Stack Radiation Monitoring Subsystem is used to monitor particulate, iodine and gaseous concentrations in the RB/FB vent stack effluent for both normal and accident plant conditions. It is composed of three sampling channels that are designed to meet the requirements of both 10 CFR 20.1302 (Reference 11.5-1) for effluent releases and RG 1.97 (Reference 11.5-11) for accident effluent releases.

The dynamic range is selected to demonstrate compliance with RG 1.21 (Reference 11.5-9) and 1.97 (Reference 11.5-11) for normal and post-accident releases. In addition, the capability of the subsystem is such that if multiple indications are needed, sufficient decade overlap, via different instruments, is provided for measurement and display.

Provisions for grab sample collection are provided and can be used for isotopic analysis and monitor calibration.

Provisions for monitoring tritium and grab sampling are also provided.

A sample, continuously extracted from the stack, passes through the panel and returns to the stack exhaust. Sampling is performed in accordance with ANSI/HPS N13.1 (Reference 11.5-13). Automatic compensation for variation in stack flow is provided to maintain the sample panel flow proportional to the main flow. The subsystem has provisions for purging the sample panel with room air to check detector response to the background radiation level reading.

The subsystem has a remotely controlled radioactive check source.

Also, abnormal flow, measured at the sample panel, is annunciated in the MCR.

The RB/FB Stack Radiation Monitoring Subsystem is nonsafety-related. The stack is sampled continuously for the full range of concentrations between normal conditions and those postulated in RG 1.97 (Reference 11.5-11). The RB/FB Stack radiation monitor is a post-accident monitor and meets the guidelines of RG 1.97 (Reference 11.5-11), which endorses (with certain exceptions specified in Section C of the Regulatory Guide) IEEE Std. 497 (Reference 11.5-27). The IEEE Std. 497 establishes flexible, performance based criteria for selection, performance, design, qualification display, and quality assurance of accident monitoring variables. See Subsection 7.5.1.3.4 for a complete discussion of RG 1.97 compliance. NUREG-0737 (Reference 11.5-15) conformance is described in Subsection 7.5.3.3. The RB/FB vent radiation monitor also provides data for plant effluent release reports identified in RG 1.21 (Reference 11.5-9).

11.5.3.2.13.2 TB Stack

The TB Stack Radiation Monitoring Subsystem is used to monitor particulate, iodine and gaseous concentrations in the TB vent stack effluent for both normal and accident plant conditions. It is composed of three sampling channels that are designed to meet the requirements

PRELIMINARY

of both 10 CFR 20.1302 (Reference 11.5-1) for effluent releases and RG 1.97 (Reference 11.5-11) for accident effluent releases.

The dynamic range is selected to demonstrate compliance with RG 1.21 (Reference 11.5-9) and 1.97 (Reference 11.5-11) for normal and post-accident releases. In addition, the capability of the subsystem is such that if multiple indications are needed, sufficient decade overlap, via different instruments, is provided for measurement and display.

Provisions for grab sample collection are provided and can be used for isotopic analysis and monitor calibration.

Provisions for monitoring tritium and grab sampling are also provided.

A sample, continuously extracted from the stack, passes through the panel and returns to the stack exhaust. Sampling is performed in accordance with ANSI/HPS N13.1 (Reference 11.5-13). Automatic compensation for variation in stack flow is provided to maintain the sample panel flow proportional to the main flow. The subsystem has provisions for purging the sample panel with room air to check detector response to the background radiation level reading.

The subsystem has a remotely controlled radioactive check source.

Also, abnormal flow, measured at the sample panel, is annunciated in the MCR.

The TB Stack Radiation Monitoring Subsystem is nonsafety-related. The stack is sampled continuously for the full range of concentrations between normal conditions and those postulated in RG 1.97 (Reference 11.5-11). The TB Stack radiation monitor is a post-accident monitor and meets the guidelines of RG 1.97 (Reference 11.5-11), which endorses (with certain exceptions specified in Section C of the Regulatory Guide) IEEE Std. 497 (Reference 11.5-27). The IEEE Std. 497 establishes flexible, performance based criteria for selection, performance, design, qualification display, and quality assurance of accident monitoring variables. See Subsection 7.5.1.3.4 for a complete discussion of RG 1.97 compliance. NUREG-0737 (Reference 11.5-15) conformance is described in Subsection 7.5.3.3. The TB vent radiation monitor also provides data for plant effluent release reports identified in RG 1.21 (Reference 11.5-9).

11.5.3.2.13.3 RW Stack

The RW Stack Radiation Monitoring Subsystem is used to monitor particulate, iodine and gaseous concentrations in the RW vent stack effluent for both normal and accident plant conditions. It is composed of three sampling channels that are designed to meet the requirements of both 10 CFR 20.1302 (Reference 11.5-1) for effluent releases and RG 1.97 (Reference 11.5-11) for accident effluent releases.

The dynamic range is selected to demonstrate compliance with RG 1.21 (Reference 11.5-9) and 1.97 (Reference 11.5-11) for normal and post-accident releases. In addition, the capability of the subsystem is such that if multiple indications are needed, sufficient decade overlap, via different instruments, is provided for measurement and display.

Provisions for grab sample collection are provided and can be used for isotopic analysis and monitor calibration.

Provisions for monitoring tritium and grab sampling are also provided.

A sample, continuously extracted from the stack, passes through the panel and returns to the stack exhaust. Sampling is performed in accordance with ANSI/HPS N13.1 (Reference 11.5-13). Automatic compensation for variation in stack flow is provided to maintain the sample panel flow proportional to the main flow. The subsystem has provisions for purging the sample panel with room air to check detector response to the background radiation level reading.

The subsystem has a remotely controlled radioactive check source.

Also, abnormal flow, measured at the sample panel, is annunciated in the MCR.

The RW Stack Radiation Monitoring Subsystem is nonsafety-related. The stack is sampled continuously for the full range of concentrations between normal conditions and those postulated in RG 1.97 (Reference 11.5-11). The RW Stack radiation monitor is a post-accident monitor and meets the guidelines of RG 1.97 (Reference 11.5-11), which endorses (with certain exceptions specified in Section C of the Regulatory Guide) IEEE Std. 497 (Reference 11.5-27). The IEEE Std. 497 establishes flexible, performance based criteria for selection, performance, design, qualification display, and quality assurance of accident monitoring variables. See Subsection 7.5.1.3.4 for a complete discussion of RG 1.97 compliance. NUREG-0737 (Reference 11.5-15) conformance is described in Subsection 7.5.5.3. The RW vent radiation monitor also provides data for plant effluent release reports identified in RG 1.21 (Reference 11.5-9).

11.5.3.2.14 Fuel Building Combined Ventilation Exhaust

This subsystem continuously monitors halogens, particulates and noble gas releases transported from the FB to the RB/FB stack under both normal and accident conditions.

A sample, continuously extracted from the FBVS duct, passes through a sample panel and is returned to the main exhaust. Sampling is performed in accordance with ANSI/HPS N13.1 (Reference 11.5-13). Automatic compensation for variation in HVAC flow is provided in order to maintain the sample panel flow proportional to the main flow. The subsystem has a provision for purging the sample panel with room air to check detector response to the background radiation level reading.

The subsystem has a remotely controlled radioactive check source.

Also, abnormal flow, measured at the sample panel, is annunciated in the MCR.

Provisions for grab sample collection are provided and can be used for isotopic analysis and monitor calibration.

A tritium monitoring device and grab sampling feature are provided with this subsystem.

The displayed range is selected to cover normally expected concentrations of radioactivity in FBVS exhaust air, up to and beyond, radionuclide concentrations indicated in 10 CFR 20 (Reference 11.5-21).

The FB Combined Ventilation Exhaust Radiation Monitoring Subsystem is nonsafety-related.

PRELIMINARY

11.5.3.2.15 Main Steam Line (MSL)

This subsystem monitors the gross gamma radiation level of the steam transported by the MSLs in the MSL tunnel. The normal radiation level is produced primarily by coolant activation gases plus smaller quantities of fission gases being transported with the steam.

The MSL radiation monitors consist of four instrument channels, one for each steam line. Each channel consists of a local gamma-sensitive detector and a radiation monitor located in the main control room.

The detectors are physically located near the MSLs just downstream of the outboard MSL isolation valves (MSIVs) in the steam tunnel. These detectors are arranged so that they are capable of detecting significant increases in radiation level with any number of the MSLs in operation.

The subsystem initiates shutdown and isolation of the main turbine condenser mechanical vacuum pump (MVP) upon detection of high radiation. Channel trips are annunciated in the MCR.

The range of channel measurement and display is shown in Table 11.5-1 and Table 11.5-2. The range is selected to provide detection from normal background radiation at zero percent reactor power up to, and including, gross releases of fission products from reactor fuel into the reactor vessel and its subsequent transport to the MSLs.

11.5.3.2.16 Drywell Sumps LCW/HCW Discharge

This subsystem monitors the gross radiation level in the liquid waste transferred in the drain line from the drywell LCW and HCW sumps to the Radwaste System. One monitoring channel is provided in each sump drain line. Each channel uses a gamma sensitive radiation detector that is located near the drain line from the sump just downstream from the outboard isolation valve. The output from each detector is fed to radiation monitors in the MCR or locally for display and annunciation.

Automatic sump pump trips occur if high radiation levels are detected during liquid radwaste transfers.

The range of channel measurement and display is shown in Table 11.5-1 and Table 11.5-4. The range is selected to provide sufficient coverage for expected radioactivity concentrations due to accident source terms in these sumps and address the TMI concern regarding unmonitored transfer of wastes from the containment to the radwaste facility.

11.5.4 Regulatory Evaluation

The system design for radiation monitoring is in conformance with the relevant requirements and criteria that are stipulated in the codes and standards that are identified in Subsection 11.5.2. Radiation monitoring is provided during reactor operation and under post-accident conditions. Specifically, the following requirements are evaluated for compliance.

11.5.4.1 Basis for Monitor Location Selection

The detector locations are selected, per RG 1.21 (Reference 11.5-9) and Standard Review Plan 11.5, to monitor the major and potentially significant paths for release of radioactive

material during normal reactor operation including anticipated operational occurrences, and to provide alarms and necessary isolations. The radioactivity levels in liquid and gaseous effluent releases are monitored, measured, displayed and recorded.

11.5.4.2 Expected Radiation Levels

Expected radiation levels are provided in Section 12.2.

11.5.4.3 Instrumentation

Grab samples are analyzed to identify and quantify the specific radionuclides in effluents. The results from the sample analysis are used to establish relationships between the gross gamma monitor readings and concentrations or release rates of radionuclides in continuous effluent releases. Tables 11.5-4 through 11.5-8 provide summary information concerning the frequency, analysis, sensitivity and purpose for both liquid and gaseous process and effluent extracted samples that are analyzed in the health physics laboratory. Table 11.5-9 provides information concerning the selection of dynamic ranges for monitoring.

11.5.4.4 Setpoints

The derivation of trip setpoints for effluent and discharge radiation monitors are specified in the Offsite Dose Calculation Manual (ODCM). Trip setpoints for all other radiation monitors are specified in the plant operating procedures.

The ODCM contains the methodology and parameters used for calculation of offsite doses resulting from gaseous and liquid effluents and planned discharge flow rates using the information identified in Tables 11.5-5 and 11.5-6.

The trip setpoints are developed using the guidance of NUREG-1302 (Reference 11.5-24) and NUREG-0133 (Reference 11.5-25). The COL Applicant will address operational setpoints for the radiation monitors and address programs for monitoring and controlling the release of radioactive material to the environment. The ODCM will also include system information for effluent and discharge radiation monitors (COL 11.5-2-A).

11.5.4.5 Offsite Dose Calculation Manual

The COL Applicant will develop an ODCM that contains the methodology and parameters used for calculation of offsite doses resulting from gaseous and liquid effluents and planned discharge flow rates using the guidance of NUREG-1302 (Reference 11.5-24) and NUREG-0133 (Reference 11.5-25). The COL Applicant will develop the setpoint calculation methodology for the radiation monitors and address programs for monitoring and controlling the release of radioactive material to the environment, which eliminates the potential for unmonitored and uncontrolled release. The ODCM will include planned discharge flow rates (COL 11.5-2-A).

The LWMS provisions for sampling liquid and gaseous waste streams identified in Tables 11.5-5 and 11.5-6 respectively, will be included in the ODCM.

11.5.4.6 Process and Effluent Monitoring Program

In addition, the COL Applicant is responsible for the site-specific programs, aspects of the process and effluent monitoring and sampling as specified in Tables 11.5-5 and 11.5-6 per

ANSI/HPS N13.1 (Reference 11.5-13) and Regulatory Guides 1.21 (Reference 11.5-9) and 4.15 (Reference 11.5-12) (COL 11.5-3-A).

11.5.4.7 Sensitivity or Subsystem Lower Limit of Detection

The derivation of each installed effluent radiation monitor's lower limit of detection, and the derivation of each installed process radiation monitor's sensitivity are to be determined by the COL Applicant based on site-specific conditions and operating characteristics (COL 11.5-1-A).

Dynamic detection ranges for process and effluent radiation monitors are found in Table 11.5-2 and Table 11.5-4 and are adjusted according to plant unique configurations and radiation background.

11.5.4.8 Site Specific Offsite Dose Calculation

The COL Applicant is responsible for addressing 10 CFR 50, Appendix I (Reference 11.5-8) guidelines for maximally exposed offsite individual doses and population doses via liquid and gaseous effluents (COL 11.5-4-A).

11.5.4.9 Instrument Sensitivities

The COL Applicant is responsible for the sensitivities, sampling and analytical frequencies and basis for each gaseous and liquid sample (COL 11.5-5-A).

11.5.5 Process Monitoring and Sampling

11.5.5.1 Implementation of General Design Criterion 19

The Main Control Building is provided with detectors that sense radiation in the intake air supply to the control building and provide warning and initiate actions to protect operating personnel for access and occupancy of the control room under accident conditions.

In addition, the TSC ventilation air intake is provided with radiation detection to initiate actions to protect personnel.

11.5.5.2 Implementation of General Design Criterion 60

All potentially significant radioactive discharge paths are equipped with a control system to automatically isolate the effluent on indication of a high radiation level. The subsystems providing these features include:

- Offgas Post-treatment,
- Reactor Building HVAC Exhaust,
- Refuel Handling Area HVAC Exhaust,
- Liquid Radwaste Discharge,
- FB General Area HVAC,
- Isolation Condenser Vent Exhaust,
- MSL,

- Containment Purge Exhaust, and
- FB Fuel Pool HVAC.

11.5.5.3 Implementation of General Design Criterion 63

Fuel storage and radioactive waste systems and their associated handling areas are monitored for excessive radiation levels. The subsystems monitoring these areas include:

- Offgas Pre-treatment,
- Offgas Post-treatment,
- Radwaste Building Ventilation Exhaust,
- FB Fuel Pool HVAC ,
- FB Combined Ventilation Exhaust,
- Charcoal Vault Ventilation,
- FB General Area HVAC,
- Refuel Handling Area Exhaust, and
- Reactor Building HVAC Exhaust.

11.5.5.4 Implementation of General Design Criterion 64

Radiation levels in the reactor containment atmosphere, spaces containing components for the recirculation of loss-of-coolant accident fluids, effluent discharge paths and important process streams are monitored for radioactivity. The subsystems monitoring these paths and areas include:

- Reactor Building HVAC Exhaust,
- Refuel Handling Area HVAC Exhaust,
- Drywell Sumps LCW/HCW Discharge,
- Isolation Condenser Vent Exhaust,
- FB General Area HVAC,
- MSL,
- Offgas Pre-treatment and Offgas Post-treatment,
- Charcoal Vault Ventilation,
- Reactor Component Cooling Water Intersystem Leakage,
- TB Combined Ventilation Exhaust,
- Radwaste Building Ventilation Exhaust,
- Liquid Radwaste Discharge ,
- Main Turbine Gland Seal Steam Condenser Exhaust,

PRELIMINARY

- Drywell Fission Products,
- FB Combined Ventilation Exhaust,
- FB Fuel Pool HVAC ,
- TB Normal Ventilation Air HVAC,
- TB Compartment Area Air HVAC,
- RB/FB Stack,
- TB Stack,
- RW Stack, and
- Containment Purge Exhaust.

11.5.5.5 Basis for Monitor Location Selection

The detector locations are selected to monitor the major and potentially significant paths for release of radioactive material during normal reactor operation including anticipated operational occurrences, thus meeting the intent of RG 1.21 (Reference 11.5-9) and SRP 11.5 (Reference 11-18). Monitoring of each major path provides measurements that are representative of releases to demonstrate compliance with 10 CFR 20 Appendix B (Reference 11.5-21) limits.

11.5.5.6 Expected Radiation Levels

Expected radiation levels are listed in Section 12.2.

11.5.5.7 Instrumentation

Grab samples are analyzed to identify and quantify the specific radionuclides in process streams. The results from the sample analysis are used to establish relationships between the gross gamma monitor readings and concentration and radionuclides in the process streams.

11.5.5.8 Setpoints

The trip setpoints for the certain safety-related radiation monitors are specified in the ODCM (COL 11.5-2-A). Trip setpoints for nonsafety-related radiation monitors are specified in plant operating procedures.

11.5.5.9 Process and Post-Accident Sampling Programs – Regulatory Compliance

The design considerations, acceptance criteria, and sample point locations described in the Standard Review Plan Subsection 9.3.2 for sampling of radioactive streams and processes via the Process Sampling System were evaluated for the ESBWR design. Post-accident monitoring program uses sample point parameters and key sample locations as described in DCD Tier 2 Subsections 9.3.2 and 7.5.1.

In addition, where practicable, provisions are made to include the ability to collect samples at central sample stations in order to reduce leakage, spillage and radiation exposures to operating

personnel. The Process Radiation Monitoring Subsystems are designed to maintain radiation exposures ALARA in accordance with 10 CFR Part 20.1101(b).

11.5.6 Calibration and Maintenance

11.5.6.1 Inspection and Tests

During reactor operation, periodic checks of system operability are made by observing channel behavior. At periodic intervals during reactor operation, the detector response of each monitor provided with a remotely positioned check source is verified, together with the instrument background count rate, to ensure proper functioning of the monitors. Any detector whose response cannot be verified by observation during normal operation or by using the remotely positioned check source is response checked with a portable radiation source. A record is maintained showing the background radiation level and the detector response.

The system incorporates self-diagnostics and online calibration for its process radiation monitors that operate continuously to assure maximum availability and minimum down time. In addition, a provision for using test signals for checking system operability is included in the design. Also, each radiation channel is tested and calibrated periodically using a standard radiation source to validate channel operability.

The following monitors have alarm trip circuits that can be tested by using test signals or portable gamma sources:

- MSL,
- Reactor Building HVAC Exhaust,
- Refuel Handling Area HVAC Exhaust,
- Control Room, Habitability Area HVAC Subsystem (CRHAVS),
- FB General Area HVAC,
- Isolation Condenser Vent Exhaust,
- TB Normal Ventilation Air HVAC,
- TB Compartment Area Air HVAC,
- Charcoal Vault Ventilation,
- Drywell Sump LCW/HCW Discharge,
- TSC HVAC Air Intake,
- Offgas Pre-treatment,
- FB Fuel Pool HVAC, and
- Containment Purge Exhaust HVAC.

The following monitors include built-in check sources:

- Offgas Post-treatment,
- Liquid Radwaste Discharge,

PRELIMINARY

- Radwaste Building Ventilation Exhaust,
- Main Turbine Gland Seal Steam Condenser Exhaust,
- TB Combined Ventilation Exhaust,
- Drywell Fission Product,
- Reactor Component Cooling Water Intersystem Leakage,
- FB Combined Ventilation Exhaust, and
- RB/FB Stack.
- TB Stack.
- RW Stack.

The quality assurance program for design, fabrication, procurement, and installation of the PRMS is in accordance with the overall quality assurance program described in Chapter 17.

11.5.6.2 Calibration

Calibration of radiation monitors is performed using certified commercial radionuclide sources traceable to the National Institute of Standards and Technology. Each continuous monitor is calibrated during plant operation or during the refueling outage if the detector is not readily accessible. Calibration can also be performed on the applicable instrument by using liquid or gaseous radionuclide standards or by analyzing particulate iodine or gaseous grab samples with laboratory instruments.

11.5.6.3 Maintenance

Control and routine maintenance and cleaning operations of the sampling systems are conducted from either the front or the top of the skid or panel. Lifting eyes or other devices are provided for hoisting the units, to facilitate replacement if it is ever required.

Instrument modules are designed to facilitate calibration checks and troubleshooting. Accessibility for power supply adjustments is provided.

Sampling racks and electronic modules are serviced and maintained on an annual basis or in accordance with the operational instructions to ensure reliable operation. Such maintenance includes servicing and replacement of defective components and adjustments, as required, after performing a test or calibration check. If any work is performed that would affect the calibration of the instrument, a re-calibration is performed following the maintenance operation.

11.5.6.4 IE Bulletin 80-10 (Reference 11.5-28) Evaluation

The Process Radiation Monitoring System comprises subsystems that monitor liquid and gaseous effluents that utilize components designed and installed in various ways. A majority of these subsystems are constructed in a way that it is not possible for them to become contaminated due to leakage, spills, errors in valve lineup or other operating conditions as a result of interfacing with radioactive systems. These types of Radiation Monitoring Subsystems are typically purely electrical in nature and do not physically interconnect with the radioactive systems that they are monitoring. In addition, these PRM Subsystems do not interconnect with other non-radioactive

systems, thereby eliminating the potential for transfer of radioactive material from a radioactive system to a non-radioactive system.

However, in the design of several PRM Subsystems, some interconnections to radioactive systems are necessary. In these cases, the additional subsystem interconnections to non-radioactive systems are limited to purge air, purge water and makeup water for filling loop seals. In these subsystems, the designs of these interconnections are such that the contamination of the non-radioactive system or process due to leakage, spillage, valving errors or other operating conditions is precluded. For example, for equipment requiring the use of purge air, the air is taken from the room atmosphere where the sampling subsystem is located, passed through a prefilter, and then, upon demand, made available for purging of the Radiation Monitoring Subsystem. Because of the design of the filtering mechanism, contamination of the outside air is precluded. In the case of liquid monitors that require flush water, the design of these interconnections is such that the flush water supply is only temporarily connected during maintenance and then completely removed upon termination of the flush. Where loop seals are utilized, which is limited to drains from ventilation ducting provided to collect any condensate in the ventilation line, the loop seals are isolated from the makeup water source by use of isolation valves and backflow preventers.

11.5.6.5 Implementation of 10 CFR 20.1406 (Reference 11.5-23)

The PRM Subsystem designs, and procedures used for operation, minimization of facility and environmental contamination, facilitate decommissioning, and minimization of radioactive waste generation, in accordance with 10 CFR 20.1406 includes:

- Minimizing contamination by:
  - Locating radiation detectors outside the process that they monitor, whenever feasible, to avoid the potential of coming in contact with a radioactive process;
  - Providing atmospheric purging of the internal portion of air sampling skids as necessary;
  - Providing the ability for liquid flushing of the internal portions of liquid sampling skids as necessary;
  - Designing the interior portions of liquid and gaseous sampling chambers to minimize the plateout of radioactive material; and
  - Designing sample extraction points such that they minimize the potential for spillage and contamination of adjacent areas.
- Facilitating decommissioning by:
  - Providing equipment, where feasible, that reduces the need for decontamination during the removal and disposal of the equipment.
- Minimizing the generation of radioactive waste by:
  - Directing continuous samples from radioactive processes back to the sampled process;

PRELIMINARY

- Utilizing electronic bug sources, where compatible with the subsystem design, in order to minimize the use of radioactive sources; and
- Minimizing the amount of a sample that needs to be extracted, consistent with laboratory and sensitivity requirements.

11.5.7 COL Information

11.5-1-A Sensitivity or Subsystem Lower Limit of Detection

The derivation of each installed effluent radiation monitor's lower limit of detection, and the derivation of each installed process radiation monitor's sensitivity are to be determined by the COL Applicant based on site-specific conditions and operating characteristics (Subsection 11.5.4.7).

11.5-2-A Offsite Dose Calculation Manual

The COL Applicant will develop an ODCM that contains the methodology and parameters used for calculation of offsite doses resulting from gaseous and liquid effluents and planned discharge flow rates using the information identified in Tables 11.5-5 and 11.5-6.

The trip setpoints are developed using the guidance of NUREG-1302 (Reference 11.5-24) and NUREG-0133 (Reference 11.5-25). The COL Applicant will develop the setpoint calculation methodology for the radiation monitors and address programs for monitoring and controlling the release of radioactive material to the environment, which eliminates the potential for unmonitored and uncontrolled release. The ODCM will include planned discharge flow rates (Subsection 11.5.4.5). The ODCM will also include system information for effluent and discharge radiation monitors (Subsection 11.5.4.4).

The COL Applicant will evaluate site-specific conditions and requirements in assessing radiation exposure, including N_{16} source and skyshine doses to members of the public in the ODCM in accordance with 10 CFR 20.1301(e) and 10 CFR 20.1302 (Subsection 12.2.1.3).

The COL Applicant will provide a milestone for full program implementation (Section 13.4).

11.5-3-A Process and Effluent Monitoring Program

The COL Applicant is responsible for the site-specific programs, aspects of the process and effluent monitoring and sampling as specified in Tables 11.5-5 and 11.5-6 per ANSI/HPS N13.1 (Reference 11.5-13) and RGs 1.21 (Reference 11.5-9) and 4.15 (Reference 11.5-12) (Subsection 11.5.4.6).

The COL Applicant will provide a milestone for full program implementation (Section 13.4).

11.5-4-A Site Specific Offsite Dose Calculation

The COL Applicant is responsible for addressing 10 CFR 50, Appendix I (Reference 11.5-8) guidelines for maximally exposed offsite individual doses and population doses via liquid and gaseous effluents (Subsection 11.5.4.8).

11.5-5-A Instrument Sensitivities

The COL Applicant is responsible for the sensitivities, sampling and analytical frequencies and basis for each gaseous and liquid sample (Subsection 11.5.4.9).

11.5.8 References

11.5-1 Title 10 Code of Federal Regulations Part 20.1302, "Compliance with Dose Limits for Individual Members of the Public."

11.5-2 Title 10 Code of Federal Regulations Part 50.34a, "Design Objectives for Equipment to Control Releases of Radioactive Material in Effluents-Nuclear Power Plants," and Part 52.47 "Contents of Applications; technical information."

11.5-3 Title 10 Code of Federal Regulations Parts 50.34(f)(2)(viii), 50.34(f)(2)(xvii), 50.34(f)(2)(xxvii), and 50.34(f)(2)(xxviii).

11.5-4 Title 10 Code of Federal Regulations Part 50.36a, "Technical Specifications on Effluents from Nuclear Power Reactors".

11.5-5 Title 10 Code of Federal Regulations Part 50, Appendix A, General Design Criterion 60, "Control of Releases of Radioactive Materials to the Environment."

11.5-6 Title 10 Code of Federal Regulations Part 50, Appendix A, General Design Criterion 63, "Monitoring Fuel and Waste Storage."

11.5-7 Title 10 Code of Federal Regulations Part 50, Appendix A, General Design Criterion 64, "Monitoring Radioactivity Releases."

11.5-8 Title 10 Code of Federal Regulations Part 50, Appendix I, "Numerical Guides for Design Objectives and Limiting Conditions for Operation to Meet the Criterion 'As Low as is Reasonably Achievable' for Radioactive Material in Light-Water-Cooled Nuclear Power Reactor Effluents."

11.5-9 Nuclear Regulatory Commission, Regulatory Guide 1.21, "Measuring and Reporting Radioactivity in Solid Wastes and Releases of Radioactive Materials in Liquid and Gaseous Effluents from Light-Water-Cooled Nuclear Power Plants," Revision 1, June 1974.

11.5-10 Nuclear Regulatory Commission, Regulatory Guide 1.45, "Reactor Coolant Pressure Boundary Leakage Detection Systems," Revision 0, May 1973.

11.5-11 Nuclear Regulatory Commission, Regulatory Guides 1.97, "Instrumentation for Light-Water-Cooled Nuclear Power Plants to Assess Plant Conditions During and Following an Accident," Revision 3, May 1983.

11.5-12 Nuclear Regulatory Commission, Regulatory Guide 4.15, "Quality Assurance for Radiological Monitoring Programs (Normal Operation) - Effluent Streams and the Environment," Revision 1, February 1979.

11.5-13 ANSI/HPS N13.1-1999, "Sampling and Monitoring Releases of Airborne Radioactive Substances from the Stacks and Ducts of Nuclear Facilities."

11.5-14 None.

11.5-15 NUREG-0737, "Clarification of TMI Action Plan Requirements" (1980).

11.5-16 Title 10 Code of Federal Regulations Part 20 Appendix B, "Annual Limits on Intake (ALI's) and Derived Air Concentrations (DAC's) of Radionuclides for Occupational Exposure; Effluent Concentrations; Concentrations for Release to Sewerage."

PRELIMINARY

11.5-17 Title 10 Code of Federal Regulations Part 50 Appendix A, General Design Criterion 19, "Control Room."

11.5-18 NUREG-0800, Standard Review Plan, 11.5 "Process and Effluent Radiological Monitoring Instrumentation and Sampling Systems," DRAFT Rev.4 – April 1996.

11.5-19 ANSI/IEEE N42.18 – 2004, "American National Standard Specification and Performance of On-Site Instrumentation for Continuously Monitoring Radioactivity for Effluents – Description." (Redesignation of N13.10-1974 and Reaffirmation of N42.18-1980.)

11.5-20 Title 10 Code of Federal Regulations Part 50 Appendix B, "Quality Assurance Criteria for Nuclear Power Plants and Fuel Reprocessing Plants."

11.5-21 Title 10 Code of Federal Regulations Part 20.

11.5-22 Title 10 Code of Federal Regulations, Part 20.1301 (e) "Dose Limits for Individual Members of the Public."

11.5-23 Title 10 Code of Federal Regulations, Part 20.1406 "Minimization of Contamination."

11.5-24 NUREG-1302, "Offsite Dose Calculation Manual Guidance, Standard Radiological Effluent Controls for BWRs."

11.5-25 NUREG-0133, "Preparation of Radiological Effluent Technical Specifications for Nuclear Power Plants," 1978.

11.5-26 BTP HICB-10, "Branch Technical Position (BTP), Guidance on Application of Regulatory Guide 1.97," Revision 4, June 1997.

11.5-27 IEEE Std. 497-2002, "Standard Criteria for Accident Monitoring Instrumentation for Nuclear Generating Stations."

11.5-28 Inspection and Enforcement, Bulletin 80-10, "Contamination of Nonradioactive System and Resulting Potential for Unmonitored, Uncontrolled Release of Radioactivity to the Environment," May 6, 1980.

PRELIMINARY

Table 11.5-1

Process and Effluent Radiation Monitoring Systems

Monitored Process	No. of Channels	Sample Line or Detector Location	Displayed Channel Range* and **
A. Safety-Related Monitors			
Reactor Building HVAC Exhaust	4	Exhaust duct upstream of exhaust ventilation isolation valve	1E-4 to 1E0 mSv/h (1E-2 to 1E2mRem/h)
Refuel Handling Area HVAC Exhaust	4	Exhaust duct upstream of exhaust ventilation isolation valve	1E-4 to 1E0 mSv/h (1E-2 to 1E2 mRem/h)
Control Room Habitability Area HVAC (Air Intake)	4	Intake duct upstream of intake ventilation isolation valve	1E-4 to 1E0 mSv/h (1E-2 to 1E2 mRem/h)
Control Room Habitability Area (EFU Outlet)	8	Outlet duct downstream of each filter train	1E-4 to 1E0 mSv/h (1E-2 to 1E2 mRem/h
FB General Area HVAC	4	Exhaust duct upstream of exhaust ventilation isolation valve	1E-4 to 1E0 mSv/h (1E-2 to 1E2 mRem/h)
Isolation Condenser Vent Exhaust	16	Exhaust of air space surrounding isolation condensers	1E-4 to 1E0 mSv/h (1E-2 to 1E2 mRem/h)
Containment Purge Exhaust	4	Exhaust duct upstream of exhaust ventilation isolation valve	1E-4 to 1E0 mSv/h (1E-2 to 1E2 mRem/h)
FB Fuel Pool HVAC	4	On HVAC duct leaving Fuel Pool Area	1E-4 to 1E0 mSv/h (1E-2 to 1E2 mRem/h)

PRELIMINARY

Table 11.5-1

Process and Effluent Radiation Monitoring Systems

Monitored Process	No. of Channels	Sample Line or Detector Location	Displayed Channel Range* and **
B. Monitors Required for Plant Operation			
MSL	4	Immediately downstream of plant MSL isolation valve	1E-2 to 1E4 mSv/h (1E0 to 1E6 mRem/h)
RB/FB Stack	3	On Stack exhaust	1E-3 to 1E10 MBq/m^3 (gaseous) (2.7E-2 to 2.7E11 µCi/m^3) 1E-6 to 1E7 MBq/m^3 (2.7E-5 to 2.7E8 µCi/m^3) (particulate & halogen)
TB Stack	3	On Stack exhaust	1E-3 to 1E10 MBq/m^3 (gaseous) (2.7E-2 to 2.7E11 µCi/m^3) 1E-6 to 1E7 MBq/m^3 (2.7E-5 to 2.7E8 µCi/m^3) (particulate & halogen)
RW Stack	3	On Stack exhaust	1E-3 to 1E10 MBq/m^3 (gaseous) (2.7E-2 to 2.7E11 µCi/m^3) 1E-6 to 1E7 MBq/m^3 (2.7E-5 to 2.7E8 µCi/m^3) (particulate & halogen
TB Normal Ventilation Air HVAC	2	Exhaust duct from TB Normal ventilation	1E-4 to 1E0 mSv/h (1E-2 to 1E2 mRem/h)
TB Compartment Area Air HVAC	2	Exhaust duct from Compartment area	1E-4 to 1E0 mSv/h (1E-2 to 1E2 mRem/h)
TB Combined Ventilation Exhaust	3	On TB combined exhaust line	1E-3 to 1E3 MBq/m^3 (2.7E-2 to 2.7E4 µCi/m^3) (gaseous) 1E-7 to 1E-1 MBq/m^3 (2.7E-6 to 2.7E0 µCi/m^3) (particulate and iodine)

PRELIMINARY

Table 11.5-1

Process and Effluent Radiation Monitoring Systems

Monitored Process	No. of Channels	Sample Line or Detector Location	Displayed Channel Range* and **
Radwaste Building Ventilation Exhaust	3	On Radwaste Building exhaust line	1E-3 to 1E3 MBq/m^3 (2.7E-2 to 2.7E4 µCi/m^3) (gaseous) 1E-7 to 1E-1 MBq/m^3 (2.7E-6 to 2.7E0 µCi/m^3) (particulate) 1E-7 to 1E-1 MBq/m^3 (2.7E-6 to 2.7E0 µCi/m^3) (iodine)
Main Turbine Gland Seal Steam Condenser Exhaust	1	Sample line from exhaust from Gland Seal condenser	1E-3 to 1E3 MBq/m^3 (2.7E-2 to 2.7E4 µCi/m^3)
Liquid Radwaste Discharge	1	Sample line from combined liquid Radwaste effluent path	1E-3 to 1E3 MBq/m^3 (2.7E-2 to 2.7E4 µCi/m^3)
Offgas Pre-treatment	1	Sample line after Offgas cooler/condenser	1E-2 to 1E4 mSv/h (1E0 to 1E6 mRem/h)
Offgas Post-treatment Skid A	3	Sample line after Charcoal treatment beds	1E0 to 1E7 MBq/m^3 (2.7E1 to 2.7E8 µCi/m^3) (gaseous) 1E-7 to 1E1 MBq/m^3 (2.7E-6 to 2.7E2 µCi/m^3) (particulate) 1E-7 to 1E1 MBq/m^3 (2.7E-6 to 2.7E2 µCi/m^3) (iodine)
Offgas Post-treatment Skid B	1	Sample Line after Charcoal treatment beds	1E0 to 1E7 MBq/m^3 (2.7E1 to 2.7E8 µCi/m^3) (gaseous)
Charcoal Vault Ventilation	1	On charcoal vault HVAC exhaust line	1E-2 to 1E4 mSv/h (1E0 to 1E6 mRem/h)

PRELIMINARY

Table 11.5-1

Process and Effluent Radiation Monitoring Systems

Monitored Process	No. of Channels	Sample Line or Detector Location	Displayed Channel Range* and **
Reactor Component Cooling Water Intersystem Leakage	2	Each RCCW heat exchanger line exit	1E-1 to 1E5 MBq/m^3 (2.7E0 to 2.7E6 µCi/m^3)
TSC HVAC Air Intake	1	Intake HVAC duct	1E-4 to 1E0 mSv/h (1E-2 to 1E2 mRem/h)
Drywell Fission Product (Particulate)	1	Sample line from drywell atmosphere	1E-7 to 1E-1 MBq/m^3 (2.7E-6 to 2.7E0 µCi/m^3)
Drywell Fission Product (Gaseous)	1	Sample line from drywell atmosphere	1E-1 to 1E4 MBq/m^3 (2.7E0 to 2.7E5 µCi/m^3)
FB Combined Ventilation Exhaust	3	Sample Line from HVAC exhaust leaving FB	1E-3 to 1E3 MBq/m^3 (2.7E-2 to 2.7E4 µCi/m^3) (gaseous) 1E-7 to 1E-1 MBq/m^3 (2.7E-6 to 2.7E0 µCi/m^3) (particulate) 1E-7 to 1E-1 MBq/m^3 (2.7E-6 to 2.7E0 µCi/m^3) (iodine)
LCW Drywell Sump Discharge	1	Drain line from LCW sump	1E-2 to 1E4 mSv/h (1E0 to 1E6 mRem/h)
HCW Drywell Sump Discharge	1	Drain line from HCW sump	1E-2 to 1E4 mSv/h (1E0 to 1E6 mRem/h)

* MBq/m^3 = mega-becquerel per cubic meter; mSv/h = milli-Sieverts per hour

** The "MBq/m^3" displayed channel range measurement unit is utilized to present to the operator the relationship between an acceptable regulatory offsite dose concentration and the actual concentration, measured at the point of interest, in comparable scientific units. Display units for all other channels not indicating "MBq/m^3" use other scientific units, such as "mSv/hr," that are comparable with their intended use. The units are not directly used to present to the operator any information concerning offsite dose concentrations. Thus, units such as "mSv/hr" are used to indicate a dose rate associated with the radioactivity contained in the process at the point of measurement, and the subsequent actions taken by the operator are not predicted on directly viewing a relationship with an offsite concentration.

PRELIMINARY

Table 11.5-2

Process Radiation Monitoring System (Gaseous and Airborne Monitors)

Radiation Monitor	Configuration	Dynamic Detection Range*	Principal Radionuclides Measured	(Deleted)	Alarms*** & Trips
A. Safety-Related Monitors					
Reactor Building HVAC Exhaust	Inline (adjacent and external to HVAC duct)	≈ 1.5E3 to 1.5E7 MBq/m^3 (4.05E4 to 4.05E8 μCi/m^3)	Xe-133		DNSC/INOP High High-High
Refuel Handling Area HVAC Exhaust	Inline (adjacent and external to HVAC duct)	≈ 7.3E2 to 7.3E6 MBq/m^3 (1.97E4 to 1.97E8 μCi/m^3)	Xe-133		DNSC/INOP High High-High
Control Room Habitability Area HVAC (Air Intake)	Inline (adjacent and external to HVAC air intake duct)	≈ 8E1 to 8E5 MBq/m^3 (2.16E3 to 2.16E7 μCi/m^3)	Xe-133		DNSC/INOP High High-High
Control Room Habitability Area HVAC (EFU Outlet)	Inline (adjacent and external to HVAC EFU Outlet duct)	≈ 8E1 to 8E5 MBq/m3 (2.16E3 to 2.16E7 μCi/m3)	Xe-133		DNSC/INOP High High-High
FB General Area HVAC	Inline (adjacent and external to HVAC duct)	≈ 7.4E1 to 7.4E5 MBq/m^3 (2.0E3 to 2.0E7 μCi/m^3)	Xe-133		DNSC/INOP High High-High
Isolation Condenser Vent Exhaust**	Inline (adjacent to vent duct)	≈ 1.5E3 to 1.5E7 MBq/m^3 (4.05E4 to 4.05E8 μCi/m^3)	Xe-133		DNSC/INOP High High-High
Containment Purge Exhaust	Inline (adjacent and external to HVAC	≈ 1.5E3 to 1.5E7 MBq/m^3 (4.05E4 to 4.05E8 μCi/m^3)	Xe-133		DNSC/INOP High

PRELIMINARY

Table 11.5-2

Process Radiation Monitoring System (Gaseous and Airborne Monitors)

Radiation Monitor	Configuration	Dynamic Detection Range*	Principal Radionuclides Measured	(Deleted)	Alarms*** & Trips
	duct)				High-High
FB Fuel Pool HVAC	Inline and internal to HVAC duct	≈ 5.5E0 to 5.5E4 MBq/m^3 (1.49E2 to 1.49E6 μCi/m^3) ≈ 1E2 to 1E6 MBq/m^3 (2.7E3 to 2.7E7 μCi/m^3)	Xe-133 Kr-85		DNSC/INOP High
B. Monitors Required for Plant Operation					
MSL	Offline (adjacent to MSLs)	≈ 1.4E2 to 1.4E8 MBq/m^3 (3.78E3 to 3.78E9 μCi/m^3)	N-16, O-19 & Coolant activation		DNSC/INOP High High-High
Offgas Post-treatment	Offline	≈ 8E-3 to 8E3 MBq/m^3 (2.16E-1 to 2.16E5 μCi/m^3) ≈ 2.6E-3 to 2.6E3 MBq/m^3 (7.03E-2 to 7.03E4 μCi/m^3) ≈ 3.7E-7 to 3.7E-1 MBq/m^3 (1.0E-5 to 1.0E1 μCi/m^3) ≈ 7.4E-7 to 7.4E-1 MBq/m^3 (2.0E-5 to 2.0E1 μCi/m^3)	Xe-133 Kr-85 Cs-137 I-131		Abnormal Flow DNSC/INOP High High-High High-High-High
Offgas Pre-treatment	Offline (adjacent to sample chamber)	≈ 1.7E2 to 1.7E8 MBq/m^3 (4.59E3 to 4.59E9 μCi/m^3) ≈ 1.0E2 to 1.0E8 MBq/m^3 (2.7E3 to 2.7E9 μCi/m^3)	Xe-138 Kr-88		DNSC/INOP High High-High

PRELIMINARY

Table 11.5-2

Process Radiation Monitoring System (Gaseous and Airborne Monitors)

Radiation Monitor	Configuration	Dynamic Detection Range*	Principal Radionuclides Measured	(Deleted)	Alarms*** & Trips
Main Turbine Gland Seal Steam Condenser Exhaust	Offline	≈ 8E-3 to 8E3 MBq/m^3 (2.16E-1 to 2.16E5 μCi/m^3) ≈ 2.6E-3 to 2.6E3 MBq/m^3 (7.03E-2 to 7.03E4 μCi/m^3)	Xe-133 Kr-85		Abnormal Flow DNSC/INOP High High-High
Charcoal Vault Ventilation	Inline (adjacent and internal to HVAC duct)	≈ 5.1E2 to 5.1E8 MBq/m^3 (1.38E4 to 1.38E10 μCi/m^3) ≈ 1E2 to 1E8 MBq/m^3 (2.7E3 to 2.7E9 μCi/m^3)	Xe-133 Kr-85		DNSC/INOP High
TB Normal Ventilation Air HVAC	Inline (adjacent and internal to HVAC duct)	≈ 1.7E0 to 1E4 MBq/m^3 (4.6E1 to 2.7E5 μCi/m^3) ≈ 3.4E1 to 3.4E5 MBq/m^3 (9.2E2 to 9.2E6 μCi/m^3)	Xe-133 Kr-85		DNSC/INOP High
TB Compartment Area Air HVAC	Inline (adjacent and internal to HVAC duct)	≈ 2E0 to 2E4 MBq/m^3 (5.4E1 to 5.4E5 μCi/m^3) ≈ 4.5E1 to 4.5E5 MBq/m^3 (1.2E3 to 1.2E7 μCi/m^3)	Xe-133 Kr-85		DNSC/INOP High
TB Combined Ventilation Exhaust	Offline	≈ 8E-3 to 8E3 MBq/m^3 (2.16E-1 to 2.16E5 μCi/m^3) ≈ 2.6E-3 to 2.6E3 MBq/m^3 (7.03E-2 to 7.03E4 μCi/m^3) ≈ 7.4E-7 to 7.4E-1 MBq/m^3 (2.0E-5 to 2.0E1 μCi/m^3) ≈ 7.4E-7 to 7.4E-1 MBq/m^3 (2.0E-5 to 2.0E1 μCi/m^3)	Xe-133 Kr-85 Cs-137 I-131		Abnormal Flow DNSC/INOP High High-High

PRELIMINARY

Table 11.5-2

Process Radiation Monitoring System (Gaseous and Airborne Monitors)

Radiation Monitor	Configuration	Dynamic Detection Range*	Principal Radionuclides Measured	(Deleted)	Alarms*** & Trips
RB/FB Stack**	Offline	≈ 1E–3 to 1E10 MBq/m^3 (2.7E-2 to 2.7E11 μCi/m^3) ≈ 1E–3 to 1E10 MBq/m^3 (2.7E-2 to 2.7E11 μCi/m^3) ≈ 1E–6 to 1E7 MBq/m^3 (2.7E-5 to 2.7E8 μCi/m^3) ≈ 1E–6 to 1E7 MBq/m^3 (2.7E-5 to 2.7E8 μCi/m^3)	Xe-133 Kr-85 Cs-137 I-131		Abnormal Flow DNSC/INOP High High-High
TB Stack**	Offline	≈ 1E–3 to 1E10 MBq/m^3 (2.7E-2 to 2.7E11 μCi/m^3) ≈ 1E–3 to 1E10 MBq/m^3 (2.7E-2 to 2.7E11 μCi/m^3) ≈ 1E–6 to 1E7 MBq/m^3 (2.7E-5 to 2.7E8 μCi/m^3) ≈ 1E–6 to 1E7 MBq/m^3 (2.7E-5 to 2.7E8 μCi/m^3)	Xe-133 Kr-85 Cs-137 I-131		Abnormal Flow DNSC/INOP High High-High
RW Stack**	Offline	≈ 1E–3 to 1E10 MBq/m^3 (2.7E-2 to 2.7E11 μCi/m^3) ≈ 1E–3 to 1E10 MBq/m^3 (2.7E-2 to 2.7E11 μCi/m^3) ≈ 1E–6 to 1E7 MBq/m^3 (2.7E-5 to 2.7E8 μCi/m^3) ≈ 1E–6 to 1E7 MBq/m^3 (2.7E-5 to 2.7E8 μCi/m^3)	Xe-133 Kr-85 Cs-137 I-131		Abnormal Flow DNSC/INOP High High-High

PRELIMINARY

Table 11.5-2

Process Radiation Monitoring System (Gaseous and Airborne Monitors)

Radiation Monitor	Configuration	Dynamic Detection Range*	Principal Radionuclides Measured	(Deleted)	Alarms*** & Trips
Drywell Fission Product	Offline	≈ 8.1E-8 to 8.1E-2 MBq/m^3 (2.2E-6 to 2.2E0 µCi/m^3) ≈ 2.6E-7 to 2.6E-1 MBq/m^3 (7.0E-6 to 7.0E0 µCi/m^3) (particulate)	Cs-137 Co-60		Abnormal Flow DNSC/INOP High High-High
Drywell Fission Product	Offline	≈ 8.1E-3 to 8.1E3 MBq/m^3 (2.2E-1 to 2.2E5 µCi/m^3) ≈ 2.6E-3 to 2.6E3 MBq/m^3 (7.0E-2 to 7.0E4 µCi/m^3) (gaseous)	Xe-133 Kr-85		Abnormal Flow DNSC/INOP High High-High
Radwaste Building Ventilation Exhaust	Offline	≈ 8E-3 to 8E3 MBq/m^3 (2.16E-1 to 2.16E5 µCi/m^3) ≈ 2.6E-3 to 2.6E3 MBq/m^3 (7.0E-2 to 7.0E4 µCi/m^3) ≈ 7.4E-7 to 7.4E-1 MBq/m^3 (2.0E-5 to 2.0E1 µCi/m^3) ≈ 7.4E-7 to 7.4E-1 MBq/m^3 (2.0E-5 to 2.0E1 µCi/m^3)	Xe-133 Kr-85 Cs-137 I-131		Abnormal Flow DNSC/INOP High High-High

PRELIMINARY

Table 11.5-2

Process Radiation Monitoring System (Gaseous and Airborne Monitors)

Radiation Monitor	Configuration	Dynamic Detection Range*	Principal Radionuclides Measured	(Deleted)	Alarms*** & Trips
FB Combined Ventilation Exhaust	Offline	≈ 8E-3 to 8E3 MBq/m^3 (2.16E-1 to 2.16E5 µCi/m^3) ≈ 2.6E-3 to 2.6E3 MBq/m^3 (7.0E-2 to7.0E4 µCi/m^3) ≈ 7.4E-7 to 7.4E-1 MBq/m^3 (2.0E-5 to 2.0E1 µCi/m^3) ≈ 7.4E-7 to 7.4E-1 MBq/m^3 (2.0E-5 to 2.0E1 µCi/m^3)	Xe-133 Kr-85 Cs-137 I-131		Abnormal Flow DNSC/INOP High High-High
TSC HVAC Air Intake	Inline and internal to HVAC intake duct	≈ 8E0 to 8E4 MBq/m^3 (2.16E2 to 2.16E6 µCi/m^3) ≈ 1.7E2 to 1.7E6 MBq/m^3 (4.6E3 to 4.6E7 µCi/m^3)	Xe-133 Kr-85		DNSC/INOP High High-High

* Dynamic detection ranges are estimated and are adjusted according to plant unique configurations and radiation background.

** Activity levels are expected to be at the subsystem's lower limit of detection (LLD). (See Subsection 11.5.4.7 for COL 11.5-2-A). Applicable values shall be included in the plant specific Offsite Dose Calculation Manual (COL 11.5-1-A and COL 11.5-2-A). See Section 12.2 for expected activity of various processes and effluents.

*** Bq/ m^3 = Becquerels per cubic meter, MBq/m^3 = Mega Becquerels per cubic meter; DNSC/INOP = downscale/inoperative; Abnormal Flow = High or Low flow in the sampling system outside system limits

.

PRELIMINARY

Table 11.5-3

Key to Radiation Monitors Shown on Figure 11.5-1

ID on Figure 11.5-1	Description
1	MSL
2	Reactor Building HVAC Exhaust
3	Refuel Handling Area HVAC Exhaust
4A, 4B, 4C	Control Room Habitability Area Subsystem HVAC (CRHAVS)
5	TB Normal Ventilation Air HVAC
6	TB Compartment Area Air HVAC
7	Offgas Pre-treatment
8	Charcoal Vault Ventilation
9A, 9B	Offgas Post-treatment
10	TB Combined Ventilation Exhaust
11	Liquid Radwaste Discharge
12	Drywell Sump LCW/HCW Discharge
13A	RB/FB Stack
13B	TB Stack
13C	RW Stack
14	Main Turbine Gland Seal Steam Condenser Exhaust
15A, 15B	Reactor Component Cooling Water Intersystem Leakage
16	Drywell Fission Product
17	Radwaste Building Ventilation Exhaust
18	FB Combined Ventilation Exhaust
19	Isolation Condenser Vent Exhaust
20	TSC HVAC Air Intake
21	FB General Area HVAC
22	FB Fuel Pool HVAC
23	Containment Purge Exhaust

PRELIMINARY

Table 11.5-4

Process Radiation Monitoring System (Liquid Monitors)

Radiation Monitor	Configuration	Dynamic Detection Range*	Principal Radionuclides Measured	(Deleted)	Alarms & Trips
Liquid Radwaste Discharge**	Offline	≈ 2.1E-3 to 2.1E3 MBq/m^3 (5.7E-2 to 5.7E4 μCi/m^3) ≈ 1.9E-2 to 1.9E4 MBq/m^3 (5.1E-1 to 5.1E5 μCi/m^3)	Cs-137 Co-60		Abnormal Flow DNSC/INOP High High-High
Reactor Component Cooling Water Intersystem Leakage	Offline (mounted external to RCCW piping)	≈ 4.3E-3 to 4.3E3 MBq/m^3 (1.16E-1 to 1.16E5 μCi/m^3) ≈ 3.6E-3 to 3.6E3 MBq/m^3 (9.7E-2 to 9.7E4 μCi/m^3)	Cs-137 Co-60		DNSC/INOP High
Drywell Sump LCW/HCW Discharge	Inline (mounted external to and adjacent to HCW and LCW discharge pipes outside the drywell)	≈ 4E4 to 4E10 MBq/m^3 (1.1E6 to 1.1E12 μCi/m^3) ≈ 8E0 to 8E6 MBq/m^3 (2.16E2 to 2.16E8 μCi/m^3)	Cs-137 Co-60		DNSC/INOP High High-High

MBq/m^3 = Mega Becquerels per cubic meter; DNSC/INOP = downscale/inoperative

* Dynamic detection ranges are estimated and are adjusted according to plant unique configurations and radiation background.

** Activity levels are expected to be at the subsystem's lower limit of detection (LLD). See Subsection 11.5.4.7 for COL requirements. Applicable values shall be included in the plant specific Offsite Dose Calculation Manual (COL 11.5-1-A and COL 11.5-2-A). See Section 12.2 for expected activity of various processes and effluents.

PRELIMINARY

Table 11.5-5

Provisions for Sampling Liquid Streams

No.	Process Systems as listed in NUREG-0800, SRP 11.5 Table 2 (Draft Rev. 4)	ESBWR System (s) that Perform the Equivalent SRP 11.5 Function (Note 1)	In Process	In Effluent	
			Grab Notes 2 & 7	Grab Notes 2 & 7	Continuous Notes 2 & 7
1.	Liquid Radwaste (Batch) Effluent System Note 3	Equipment (Low Conductivity Drain Subsystem, Floor (High Conductivity) Drain Subsystem	S&A	S&A, H3	-
2.	Service Water System	Plant Service Water System	-	S&A, H3	(S&A) Notes 4 & 6
3.	Component Cooling Water System	Reactor Component Cooling Water System	S&A	S&A, H3	(S&A) Notes 6 & 8
4.	Spent Fuel Pool Treatment System	Spent Fuel Pool Treatment System	S&A	S&A, H3	(S&A) Notes 6 & 8
5.	Equipment & Floor Drain Collection and Treatment Systems	LCW Drain Subsystem, HCW Drain Subsystem, Detergent Drain Subsystem, Chemical Waste Drain Subsystem, Reactor Component Cooling Water System (RCCWS) Drain Subsystem	-	S&A, H3	(S&A) Notes 6 & 8
6.	Phase Separator Decant & Holding Basin Systems	Equipment (Low Conductivity) Drain Subsystem, Floor (High) Drain Subsystem	-	S&A, H3	(S&A) Notes 6 & 8

PRELIMINARY

Table 11.5-5

Provisions for Sampling Liquid Streams

No.	Process Systems as listed in NUREG-0800, SRP 11.5 Table 2 (Draft Rev. 4)	ESBWR System (s) that Perform the Equivalent SRP 11.5 Function (Note 1)	In Process	In Effluent	
			Grab Notes 2 & 7	Grab Notes 2 & 7	Continuous Notes 2 & 7
7.	Chemical & Regeneration Solution Waste Systems	Chemical Waste Drain Subsystem	-	S&A, H3	(S&A) Notes 6 & 8
8.	Laboratory & Sample System Waste Systems	Chemical Waste Drain Subsystem	-	S&A, H3	(S&A) Notes 6 & 8
9.	Laundry & Decontamination Waste Systems	Detergent Drain Subsystem	-	S&A, H3	(S&A) Notes 6 & 8
10.	Resin Slurry, Solidification & Baling Drain Systems	Equipment (Low Conductivity) Drain Subsystem, Floor (High) Drain Subsystem	-	S&A, H3	(S&A) Notes 6 & 8
11.	Storm & Underdrain Water System	COL Applicant Notes 4 & 9	-	(S&A, H3) Notes 3 & 6	(S&A) Notes 3 & 6
12.	Tanks and Sumps Inside Reactor Building	Equipment (Low Conductivity) Drain Subsystem, Floor (High) Drain Subsystem, Chemical Waste Drain Subsystem, Detergent Drain Subsystem	-	S&A, H3	(S&A) Notes 6 & 8
13.	Ultrasonic Resin Cleanup Waste Systems	Note 5	-	Note 5	Note 5
14.	Non-Contaminated Waste Water System	COL Applicant Notes 3 & 4	-	(S&A, H3) Notes 3, 4 & 6	(S&A) Note 4

PRELIMINARY

Table 11.5-5

Provisions for Sampling Liquid Streams

No.	Process Systems as listed in NUREG-0800, SRP 11.5 Table 2 (Draft Rev. 4)	ESBWR System (s) that Perform the Equivalent SRP 11.5 Function (Note 1)	In Process	In Effluent	
			Grab Notes 2 & 7	Grab Notes 2 & 7	Continuous Notes 2 & 7
15.	Liquid Radioactive Waste Processing Systems (Includes Reverse Osmosis Systems)	COL Applicant Notes 3 & 4	S & A	(S&A, H3)	(S&A) Notes 6 & 8

Notes:

1. Table 11.5-5 addresses sampling provisions for BWRs as identified in Table 2 of SRP 11.5. For process systems identified for BWRs in Table 2, but not shown in Table 11.5-5, those systems are not applicable to ESBWR. In some cases, there are multiple subsystems that are used to perform the overall equivalent SRP function and are listed as such in the column.
2. S&A=Sampling & Analysis of radionuclides, to include gross radioactivity, identification and concentration of principal radionuclides and concentration of alpha emitters; R=Gross radioactivity (beta radiation, or total beta plus gamma); H3=Tritium
3. Liquid Radwaste is processed on a batch-wise basis. The Liquid Waste Management System sample tanks can be sampled for analysis of the batch. See Subsection 11.2.2.2 for more information on Liquid Radwaste Management.
4. The COL Applicant will describe provisions for monitoring wastewater systems in the plant specific Offsite Dose Calculation Manual (COL 11.5-2-A).
5. The ESBWR does not include ultrasonic resin cleanup waste system at this time. Should one be installed, the Liquid Waste Management System would provide sampling and monitoring provisions.
6 The use of parenthesis indicates that these provisions are required only for the systems not monitored, sampled, or analyzed (as indicated) prior to release by downstream provisions.
7. The sensitivity of detection, also defined here as the Lower Limit of Detection (LLD), for each indicated measured variable, is based on the applicable radionuclide (or collection of radionuclides as applicable) as given in ANSI/IEEE N42.18 (Reference 11.5-19).
8. Processed through radwaste Liquid Waste Management System (LWMS) prior to discharge. Therefore, this process system is monitored, sampled, or analyzed prior to release by downstream provisions. See Note 6 above. Depending on Utility's discretion, additional sampling lines may be installed. Continuous Effluent sampling is not required per Standard Review Plan 11.5 Draft Rev. 4, April 1996, Table 2 for this system function.
9. CST retention area can either be drained to the Storm Water System or to the LWMS as determined by manual sampling. If clean, as determined by ODCM guidelines, storm water will be released to the Storm Water System. Water requiring reprocessing will be recycled to Radwaste Floor Drain Collection Tanks.

PRELIMINARY

Table 11.5-6

Provisions for Sampling Gaseous Streams

No.	Process System as listed in NUREG-0800, SRP 11.5 Table 1 (Draft Rev 4)	ESBWR System (s) that Perform the Equivalent SRP 11.5 Function (Note 1)	Sample Provisions (Note 2)		
			In Process	In Effluent	
			Grab	Grab	Continuous
1.	Waste Gas Holdup System	OGS (Charcoal Bed portion, i.e., Offgas Post-treatment)	-	NG, H3	I
2.	Condenser Evacuation System	OGS (Cooler Condenser portion, i.e., Offgas Pre-treatment)	I	NG, H3	Note 3
3.	Vent & Stack Release Point System	RB/FB Stack TB Stack RW Stack	I	NG, H3	I
4.	Containment Purge Systems	Containment Inerting System	I	NG, H3	Note 4
5.	Auxiliary Building Ventilation System	Reactor Building HVAC System	I	NG, H3	Note 4
6.	Fuel Storage Area Ventilation System	FBVS	I	NG, H3	I
7.	Radwaste Area Vent Systems	Radwaste Building HVAC System	I	NG, H3	I
8.	Turbine Gland Seal Condenser Vent System	Main Turbine Gland Seal Steam Condenser Exhaust	I	NG, H3	Note 5
9.	Mech. Vacuum Pump Exhaust (Hogging System)	Condenser Air Removal System	Note 6	Note 7[1]	Note 5

PRELIMINARY

Table 11.5-6

Provisions for Sampling Gaseous Streams

No.	Process System as listed in NUREG-0800, SRP 11.5 Table 1 (Draft Rev 4)	ESBWR System (s) that Perform the Equivalent SRP 11.5 Function (Note 1)	Sample Provisions (Note 2)		
			In Process	In Effluent	
			Grab	Grab	Continuous
10.	Evaporator Vent Systems	Main Turbine Gland Seal Steam Condenser Exhaust	I	NG, H3	Note 5
11.	Pre-treatment Liquid Radwaste Tank Vent Gas Systems	Radwaste Building HVAC System	I	NG, H3	I
12.	TB Vent Systems	TB Combined Ventilation Exhaust	I	NG, H3	I

Notes:
1. Table 11.5-6 addresses sampling provisions for BWRs as identified in Table 1 of SRP 11.5. For process systems identified for BWRs in Table 2 of SRP 11.5, but not shown in Table 11.5-6, those systems are not used for ESBWR.
2. NG = Noble Gas; I = Iodine 131; H3 = Tritium
3. Continuous iodine sampling provided by downstream Offgas Post-treatment radiation Monitoring.
4. Continuous iodine sampling provided by downstream RB/FB Stack radiation Monitoring.
5. Continuous iodine sampling provided by downstream TB Combined Exhaust radiation Monitoring.
6. Grab sampling for iodine provided by the TB Combined Exhaust Monitoring.
7. Grab sampling for Noble Gas and Tritium is provided by the TB Combined Exhaust Monitoring.

PRELIMINARY

Table 11.5-7

Radiological Analysis Summary of Liquid Effluent Samples

Sample Description	Sample Frequency	Analysis	Sensitivity (MBq/m^3)****	Purpose
1. Liquid Radwaste Effluent Discharge *	Weekly **	Ba/La-140 and I-131	***	Effluent discharge record
Composite of all discharges *****	Monthly	Gamma Spectrum	***	
		Tritium	***	
		Gross alpha	***	
		Dissolved gas	***	
	Quarterly	Sr-89 and Sr-90	***	

* ESBWR Radwaste is processed on a batch basis. If a tank is to be discharged, analysis is performed on each batch.

** The ESBWR Liquid Waste Management System (LWMS) is designed to recycle 100% of the liquid radwaste (zero liquid release). The LWMS system has provisions for offsite discharge. If liquid radwaste is discharged, the sampling and analysis is performed per the requirements of RG 1.21.

*** The sensitivity of detection (also defined here as the Lower Limit of Detection (LLD)) for each indicated radionuclide (or collection of radionuclides as applicable) is defined in ANSI/IEEE N42.18 (Reference 11.5-19) or Regulatory Guide 1.21, "Measuring and Reporting Radioactivity in Solid Wastes and Releases of Radioactive Materials in Liquid and Gaseous Effluents from Light-Water-Cooled Nuclear Power Plants" (Reference 11.5-9) and Regulatory Guide 4.15, "Quality Assurance for Radiological Monitoring Programs (Normal Operation) - Effluent Streams and the Environment" (Reference 11.5-12) and NUREG-1302, "Offsite Dose Calculation Manual Guidance, Standard Radiological Effluent Controls for BWRs" (Reference 11.5-24).

**** The principal gamma emitters for which the LLD specification applies includes the following radionuclides: Mn-54, Fe-59, Co-58, Co-60, Zn-65, Mo-99, Cs-134, Cs-137, and Ce-141. This list does not mean that only these nuclides are to be considered. Other gamma energy peaks that are identifiable, together with those of above radionuclides, are analyzed and reported per RG 1.21.

***** A composite sample is one in which the quantity of liquid sampled is proportional to the quantity of liquid waste discharged and in which the method of sampling employed results in a specimen that is representative of the liquids released.

PRELIMINARY

Table 11.5-8

Radiological Analysis Summary of Gaseous Effluent Samples

Sample Description	Sample Frequency*	Analysis	Sensitivity (MBq/m^3)***	Purpose
1. TB Combined Ventilation Exhaust	Weekly	Gross β	**	Effluent record
		I-131	**	
		Ba/La-140	**	
	Monthly	Gamma spectrum	**	Effluent record
		I-133 and I-135	**	
		Tritium	**	
		Gross alpha	**	
	Quarterly	Sr-89 and Sr-90	**	Effluent record
2. RB/FB Stack	As above	As above	**	Effluent record
3. TB Stack	As above	As above	**	Effluent record
4. RW Stack	As above	As above	**	Effluent record
5. Radwaste Building Ventilation Exhaust	As above	As above	**	Effluent record
6. FB Combined Ventilation Exhaust	As above	As above	**	Effluent record

* All frequencies of sampling are in accordance with RG 1.21.

** The sensitivity of detection (also defined here as the Lower Limit of Detection (LLD)) for each indicated radionuclide (or collection of radionuclides as applicable) is defined in ANSI/IEEE N42.18 (Reference 11.5-19) or Regulatory Guide 1.21, "Measuring and Reporting Radioactivity in Solid Wastes and Releases of Radioactive Materials in Liquid and Gaseous Effluents from Light-Water-Cooled Nuclear Power Plants" (Reference 11.5-9) and Regulatory Guide 4.15, "Quality Assurance for Radiological Monitoring Programs (Normal Operation) - Effluent Streams and the Environment"(Reference 11.5-12) and NUREG-1302, "Offsite Dose Calculation Manual Guidance, Standard Radiological Effluent Controls for BWRs" (Reference 11.5-24).

*** The principal gamma emitters for which the LLD specification applies includes the following radionuclides: Kr-85, Kr-88, Xe-133, Xe=133m, Xe-135, and Xe-138 in noble gas releases, and Mn-54, Fe-59, Co-58, Co-60, Zn-65, Mo-99, I-131, Cs-134, Cs-137, Ce-141, and Ce-144 in Iodine and Particulate releases. This list does not mean that only these nuclides are to be considered. Other gamma energy peaks that are identifiable, together with those of the above radionuclides, are analyzed and reported per RG 1.21.

PRELIMINARY

Table 11.5-9

Process Radiation Monitoring System Estimated Dynamic Ranges

Radiation Monitor	Estimated Dynamic Detection Range	Principal Radionuclides Measured	Basis for Dynamic Range
A. Safety-Related Monitors			
Reactor Building HVAC Exhaust	≈ 1.5 E3 to 1.5E7 MBq/m^3 (4.05E4 to 4.05E8 μCi/m^3)	Xe-133	The dynamic range has been selected to provide sufficient coverage to detect both the radiation dose rates associated with normal RB ventilation releases up to the dose rate expected in the ventilation system resulting from a Fuel Handling Accident (FUHA).
Refuel Handling Area HVAC Exhaust	≈ 7.3E2 to 7.3E6 MBq/m^3 (1.97E4 to 1.97E8 μCi/m^3)	Xe-133	The dynamic range has been selected to provide sufficient coverage to detect the radiation dose rates associated with normal RB ventilation releases up to the dose rate expected in the ventilation system resulting from a FUHA.
Control Room Habitability Area HVAC (Air Intake and EFU Outlet)	≈ 8E1 to 8E5 MBq/m^3 (2.16E3 to 2.16E7 μCi/m^3)	Xe-133	The range of channel measurement and display is shown in Table 11.5-1 and Table 11.5-2. The range is selected to cover normal operation and be sensitive enough to initiate isolation of the MCR prior to exceeding the 10 CFR 50 Appendix A GDC 19 (Reference 11.5-17) guidelines of 0.05 Sieverts total effective dose equivalent (TEDE).
FB General Area HVAC	≈ 7.4E1 to 7.4E5 MBq/m^3 (2.0E3 to 2.0E7 μCi/m^3)	Xe-133	The dynamic range has been selected to provide sufficient coverage to detect a radiation dose rate associated with normal FB ventilation releases up to the dose rate expected after a FUHA occurring in the FB.

PRELIMINARY

Table 11.5-9

Process Radiation Monitoring System Estimated Dynamic Ranges

Radiation Monitor	Estimated Dynamic Detection Range	Principal Radionuclides Measured	Basis for Dynamic Range
Isolation Condenser Vent Exhaust	≈ 1.5E3 to 1.5E7 MBq/m^3 (4.05E4 to 4.05E8 μCi/m^3)	Xe-133	The dynamic range has been selected to provide coverage of the isolation condenser pool exhaust vent releases to the environment prior to exceeding 10 CFR 20 limit airborne concentrations.
Containment Purge Exhaust	≈ 1.5E3 to 1.5E7 MBq/m^3 (4.05E4 to 4.05E8 μCi/m^3)	Xe-133	The dynamic range has been selected to provide sufficient coverage to detect a radiation dose rate associated with radionuclide concentrations in the drywell during a purge to the environment and providing isolation prior to exceeding 10 CFR 20 limits.
FB Fuel Pool HVAC	≈ 5.5E0 to 5.5E4 MBq/m^3 (1.49E2 to 1.49E6 μCi/m^3) ≈ 1E2 to 1E6 MBq/m^3 (2.7E3 to 2.7E7 μCi/m^3)	Xe-133 Kr-85	The dynamic ranges have been selected to provide sufficient coverage to detect a radiation dose rate associated with normal FB ventilation releases up to the dose expected after a FUHA that occurs in the FB.
(Deleted)			
B. Monitors Required for Plant Operation			
MSL	≈ 1.4E2 to 1.4E8 MBq/m^3 (3.78E3 to 3.78E9 μCi/m^3)	N-16, O-19 & Coolant activation gases	The dynamic range has been selected so that sufficient coverage is provided to detect both the radiation dose rates associated with releases of activation gases and fission products from low reactor power and those that would be associated with a major release of fission products from the reactor core.

PRELIMINARY

Table 11.5-9

Process Radiation Monitoring System Estimated Dynamic Ranges

Radiation Monitor	Estimated Dynamic Detection Range	Principal Radionuclides Measured	Basis for Dynamic Range
Offgas Post-treatment	≈ 8E-3 to 8E3 MBq/m^3 (2.16E-1 to 2.16E5 μCi/m^3) ≈ 2.6E-3 to 2.6E3 MBq/m^3 (7.0E-2 to 7.0E4 μCi/m^3) ≈ 3.7E-7 to 3.7E-1 MBq/m^3 (1.0E-5 to 1.0E1 μCi/m^3) ≈ 7.4E-7 to 7.4E-1 MBq/m^3 (2.0E-5 to 2.0E1 μCi/m^3)	Xe-133 Kr-85 Cs-137 I-131	The dynamic ranges for the indicated isotopes have been selected in order to provide sufficient coverage for the OGS release rates and parameters found in Chapter 11.3 and for effluent concentrations based on 10 CFR 20 values for releases to unrestricted areas.
Offgas Pre-treatment	≈ 1.7E2 to 1.7E8 MBq/m^3 (4.06E3 to 4.06E9 μCi/m^3) ≈ 1.0E2 to 1.0E8 MBq/m^3 (2.7E3 to 2.7E9 μCi/m^3)	Xe-138 Kr-88	The dynamic ranges for the offgas pre-treatment subsystem were selected based on the values for the offgas releases associated with the OGS. The Pre-treatment Radiation Monitoring Subsystem channels are estimated to cover a release rate span of 3.7E2 to 3.7E8 MBq/sec, referenced to the noble gases listed in Table 11.1-1. The offgas release range associated with the radiation monitor is related to the t=30 minute value for offgas listed in Table 11.1-1, i.e., 3.7E3 MBq/sec, with the exception that only 2 minutes of radioactive decay is considered to occur, and the source terms are adjusted accordingly. The concentrations of the offgas, at the Offgas Pre-treatment radiation monitor, is estimated to produce a radiation dose rate, at 100% reactor power (with a decay time of 2 minutes) of approximately 30 to 40 mSv/hr.

PRELIMINARY

Table 11.5-9

Process Radiation Monitoring System Estimated Dynamic Ranges

Radiation Monitor	Estimated Dynamic Detection Range	Principal Radionuclides Measured	Basis for Dynamic Range
Main Turbine Gland Seal Steam Condenser Exhaust	≈ 8E-3 to 8E3 MBq/m^3 (2.16E-1 to 2.16E5 μCi/m^3) ≈ 2.6E-3 to 2.6E3 MBq/m^3 (7.0E-2 to 7.0E4 μCi/m^3)	Xe-133 Kr-85	The dynamic range has been selected to be able to detect 10 CFR 20 concentration limits in the Main Turbine Gland Seal Steam Condenser exhaust prior to its combination with other exhausts of the TB ventilation system.
Charcoal Vault Ventilation	≈ 5.1E2 to 5.1E8 MBq/m^3 (1.38E4 to 1.38E10 μCi/m^3) ≈ 1E2 to 1E8 MBq/m^3 (2.7E3 to 2.7E9 μCi/m^3)	Xe-133 Kr-85	The dynamic range has been selected so that radionuclide intrusion, from the offgas charcoal beds into charcoal vault ventilation ducting, is detected prior to its combination with other TB ventilation exhausts.
TB Normal Ventilation Air HVAC	≈ 1.7E0 to 1.7E4 MBq/m^3 (4.6E1 to 4.6E5 μCi/m^3) ≈ 3.4E1 to 3.4E5 MBq/m^3 (9.2E2 to 9.2E6 μCi/m^3)	Xe-133 Kr-85	The dynamic ranges have been selected to provide sufficient coverage to provide indication of 10 CFR 20 effluent limits, accounting for bounding typical site meteorology.
TB Compartment Area Air HVAC	≈ 2E0 to 2E4 MBq/m^3 (5.4E1 to 5.4E5 μCi/m^3) ≈ 4.5E1 to 4.5E5 MBq/m^3 (1.22E3 to 1.22E7 μCi/m^3)	Xe-133 Kr-85	The dynamic ranges have been selected to provide sufficient coverage to provide indication of 10 CFR 20 effluent limits, accounting for bounding typical site meteorology.

PRELIMINARY

Table 11.5-9

Process Radiation Monitoring System Estimated Dynamic Ranges

Radiation Monitor	Estimated Dynamic Detection Range	Principal Radionuclides Measured	Basis for Dynamic Range
TB Combined Ventilation Exhaust	≈ 8E-3 to 8E3 MBq/m^3 (2.16E-1 to 2.16E5 μCi/m^3) ≈ 2.6E-3 to 2.6E3 MBq/m^3 (7.0E-2 to 7.0E4 μCi/m^3) ≈ 7.4E-7 to 7.4E-1 MBq/m^3 (2.0E-5 to 2.0E1 μCi/m^3) ≈ 7.4E-7 to 7.4E-1 MBq/m^3 (2.0E-5 to 2.0E1 μCi/m^3)	Xe-133 Kr-85 Cs-137 I-131	The dynamic ranges for the indicated isotopes have been selected in order to provide coverage of effluent concentrations based on 10 CFR 20 values for releases to unrestricted areas.
RB/FB Stack	≈ 1E-3 to 1E10 MBq/m^3 (2.7E-2 to 2.7E11 μCi/m^3) ≈ 1E-3 to 1E10 MBq/m^3 (2.7E-2 to 2.7E11 μCi/m^3) ≈ 1E-6 to 1E7 MBq/m^3 (2.7E-5 to 2.7E8 μCi/m^3) ≈ 1E-6 to 1E7 MBq/m^3 (2.7E-5 to 2.7E8 μCi/m^3)	Xe-133 Kr-85 Cs-137 I-131	The dynamic ranges have been estimated in order to provide coverage of effluent concentrations over a span equivalent to those listed 10 CFR 20 and RG 1.97.
TB Stack	≈ 1E-3 to 1E10 MBq/m^3 (2.7E-2 to 2.7E11 μCi/m^3) ≈ 1E-3 to 1E10 MBq/m^3 (2.7E-2 to 2.7E11 μCi/m^3) ≈ 1E-6 to 1E7 MBq/m^3 (2.7E-5 to 2.7E8 μCi/m^3) ≈ 1E-6 to 1E7 MBq/m^3 (2.7E-5 to 2.7E8 μCi/m^3)	Xe-133 Kr-85 Cs-137 I-131	The dynamic ranges have been estimated in order to provide coverage of effluent concentrations over a span equivalent to those listed 10 CFR 20 and RG 1.97.

PRELIMINARY

Table 11.5-9

Process Radiation Monitoring System Estimated Dynamic Ranges

Radiation Monitor	Estimated Dynamic Detection Range	Principal Radionuclides Measured	Basis for Dynamic Range
RW Stack	≈ 1E-3 to 1E10 MBq/m^3 (2.7E-2 to 2.7E11 μCi/m^3) ≈ 1E-3 to 1E10 MBq/m^3 (2.7E-2 to 2.7E11 μCi/m^3) ≈ 1E-6 to 1E7 MBq/m^3 (2.7E-5 to 2.7E8 μCi/m^3) ≈ 1E-6 to 1E7 MBq/m^3 (2.7E-5 to 2.7E8 μCi/m^3)	Xe-133 Kr-85 Cs-137 I-131	The dynamic ranges have been estimated in order to provide coverage of effluent concentrations over a span equivalent to those listed 10 CFR 20 and RG 1.97.
Drywell Fission Product	≈ 8.1E-8 to 8.1E-2 MBq/m^3 (2.2E-6 to 2.2E0 μCi/m^3) ≈ 2.6E-7 to 2.6E-1 MBq/m^3 (7.0E-6 to 7.0E0 μCi/m^3) (particulate)	Cs-137 Co-60	The dynamic ranges have been selected to meet the sensitivity requirements of RG 1.45 (Section C.5).
Drywell Fission Product	≈ 8.1E-3 to 8.1E3 MBq/m^3 (2.2E-1 to 2.2E5 μCi/m^3) ≈ 2.6E-3 to 2.6E3 MBq/m^3 (7.0E-2 to 7.0E4 μCi/m^3) (gaseous)	Xe-133 Kr-85	The dynamic ranges have been selected to meet the sensitivity requirements of RG 1.45 (Section C.5).

PRELIMINARY

Table 11.5-9

Process Radiation Monitoring System Estimated Dynamic Ranges

Radiation Monitor	Estimated Dynamic Detection Range	Principal Radionuclides Measured	Basis for Dynamic Range
Radwaste Building Ventilation Exhaust	≈ 8E-3 to 8E3 MBq/m^3 (2.16E-1 to 2.16E5 μCi/m^3) ≈ 2.6E-3 to 2.6E3 MBq/m^3 (7.0E-2 to 7.0E4 μCi/m^3) ≈ 7.4E-7 to 7.4E-1 MBq/m^3 (2.0E-5 to 2.0E1 μCi/m^3) ≈ 7.4E-7 to 7.4E-1 MBq/m^3 (2.0E-5 to 2.0E1 μCi/m^3)	Xe-133 Kr-85 Cs-137 I-131	The dynamic ranges for the indicated isotopes have been selected in order to provide coverage of effluent concentrations based on 10 CFR 20 values for releases to unrestricted areas.
FB Combined Ventilation Exhaust	≈ 8E-3 to 8E3 MBq/m^3 (2.16E-1 to 2.16E5 μCi/m^3) ≈ 2.6E-3 to 2.6E3 MBq/m^3 (7.0E-2 to 7.0E4 μCi/m^3) ≈ 7.4E-7 to 7.4E-1 MBq/m^3 (2.0E-5 to 2.0E1 μCi/m^3) ≈ 7.4E-7 to 7.4E-1 MBq/m^3 (2.0E-5 to 2.0E1 μCi/m^3)	Xe-133 Kr-85 Cs-137 I-131	The dynamic ranges have been selected in order to provide coverage of effluent concentrations based on 10 CFR 20 values for releases to unrestricted areas and to indicate the presence of a FUHA in the FB.
TSC HVAC Air Intake	≈ 8E0 to 8E4 MBq/m^3 (2.16E2 to 2.16E6 μCi/m^3) ≈ 1.7E2 to 1.7E6 MBq/m^3 (4.6E3 to 4.6E7 μCi/m^3)	Xe-133 Kr-85	The dynamic range has been established to provide sufficient coverage to be able to automatically secure the TSC ventilation air intake so that the limitation of 10 CFR 50 Appendix A GDC 19 is not exceeded.
Liquid Radwaste Discharge	≈ 2.1E-3 to 2.1E3 MBq/m^3 (5.67E-2 to 5.67E4 μCi/m^3) ≈ 1.9E-2 to 1.9E4 MBq/m^3 (5.13E-1 to 5.13E5 μCi/m^3)	Cs-137 Co-60	The dynamic range is established so that the channel is capable of spanning the10 CFR 20 concentrations in liquid waste for the indicated radionuclides.

PRELIMINARY

Table 11.5-9

Process Radiation Monitoring System Estimated Dynamic Ranges

Radiation Monitor	Estimated Dynamic Detection Range	Principal Radionuclides Measured	Basis for Dynamic Range
Reactor Component Cooling Water Intersystem Leakage	≈ 4.3E-3 to 4.3E3 MBq/m^3 (1.16E-1 to 1.16E5 µCi/m^3) ≈ 3.6E-3 to 3.6E3 MBq/m^3 (9.7E-2 to 9.7E4 µCi/m^3)	Cs-137 Co-60	The dynamic range is established to provide measurement coverage of radionuclide concentrations from a fraction of the 10 CFR 20 effluent limits in water to the concentrations caused by a 1 gpm leak from reactor water into the RCCW system.
Drywell Sump LCW/HCW Discharge	≈ 4 E4 to 4 E10 MBq/m^3 (1.08E6 to 1.08E12 µCi/m^3) ≈ 8 E0 to 8 E6 MBq/m^3 (2.16E2 to 2.16E8 µCi/m^3)	Cs-137 Co-60	The dynamic ranges have been selected to provide sufficient coverage to encompass the radiation dose rates, on the outside of the LCW and HCW pipes, using typical reactor water concentrations of various radionuclides. Reactor water concentrations associated with a LOCA were used to estimate the upper limit of the dynamic range.

PRELIMINARY

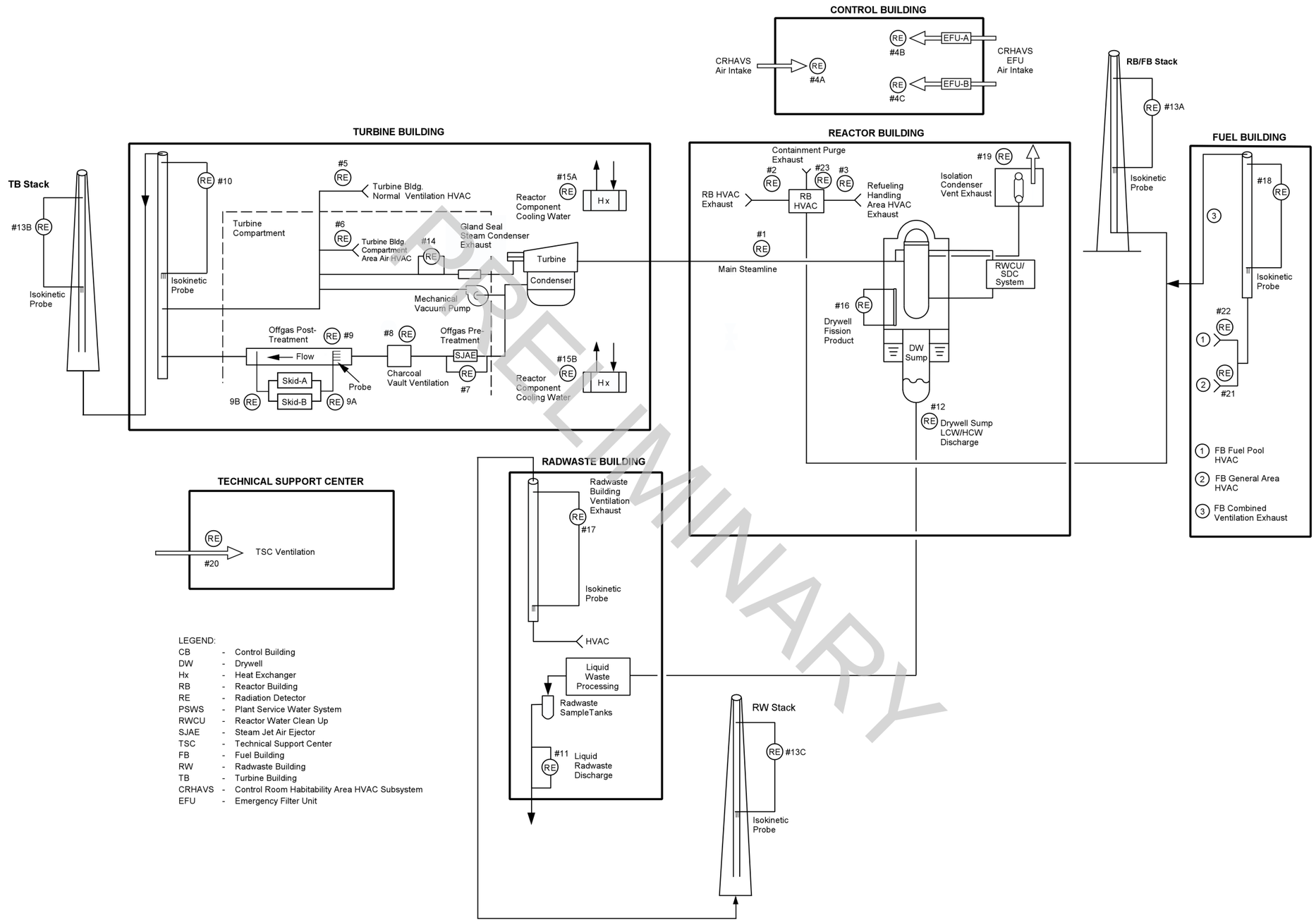

Figure 11.5-1. Location of Radiation Monitors

PRELIMINARY

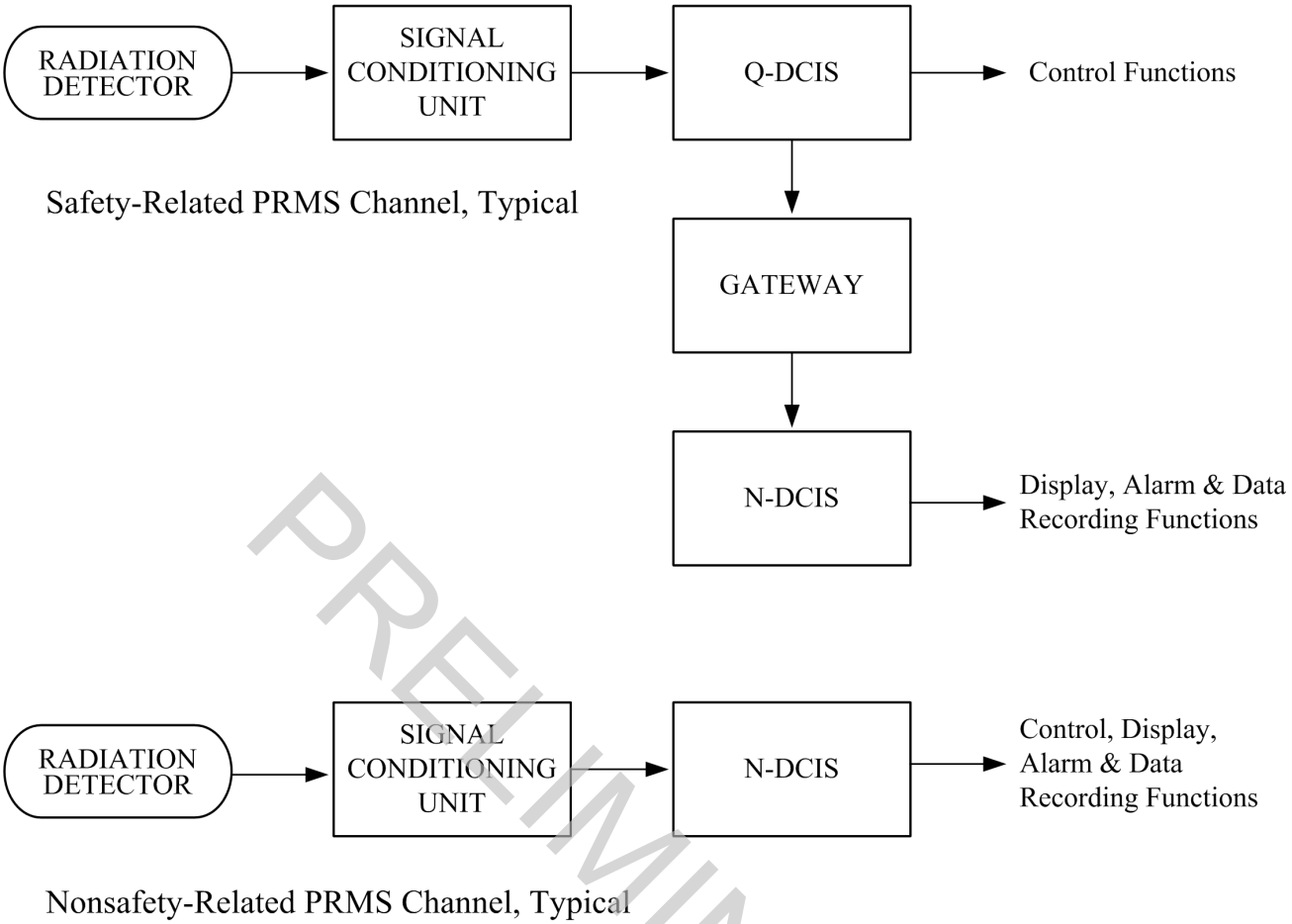

Figure 11.5-2. PRMS Channel Block Diagram

PRELIMINARY