Tech. Spec. Changes -
"Alternate Source Term"

Cycle 07-6 Operator Training

C07601

Terminal Objective

- Review recent Tech. Spec. changes to provide a better understanding of the “Alternate Source Term”.

Enabling Objectives

- LOUT Explain the bases for all Technical Specifications that apply to high activity in the RCS. (MB-06115).
- LORT Describe how technical specifications relate to risk assessment. (MB-06459).

First there was – “Source Term”

- “Initial DBA Source Term”
  - The initial assumptions for isotopic releases from the fuel (type of isotope, chemical state), during DBA, & during the first two hours of an accident, into CTMT.
  - Based on Whole Body dose, first 2 hrs.
  - Release starts at T=0 of event
  - For LOCA, 100% noble gas, 50% iodine, 1% core solids, all released.

Then came “Alternate Source Term”

- “Alternate Source Term”
  - Change of isotopic fractions, when they are released, and the type/state (solid, liquid, gas) based on TMI & other industry experience. New methodology in calc. (Iodine release is primarily particulate)
  - Based on TEDE only, during worst 2 hrs.
  - Release starts T=1.3 hrs after event
  - LOCA isotope release fractions different and mostly particulate, percentages less.

Why did we need an "Alternate Source Term"

- Economics
  - Allows outages to be shorter due to less time spent maintaining CTMT penetrations/boundaries during fuel handling etc. = reliability increase
- Rad exposure
  - Less time to perform work = less exposure
- Realistic values
  - Post TMI industry realized assumptions were overly conservative, based on 1960's methodology. NRC realized new values were better, "risk based".

‘Partial implementation’ overview

- Done in Sept. – Nov. 2004
  - TS 3.3.3.1 Relocate surv. req.s to 3.3.4
  - TS 3.7.6.1 Revise mode applicibality
  - TS 3.9.4 Relax CTMT closure rules
  - TS 3.9.8.1 & 3.9.8.2 Relax CPVIS req.s
  - TS 3.9.15 Relax SFP integrity req.s

‘Partial implementation’ overview

- Done in Sept. – Nov. 2004
  - Initial changes to allow relaxation of CTMT and SFP closure during outages.
    - Change calculated doses due to FHA in CTMT or SFP
    - Change times for isolating and going to recirc. in CR
    - Changes due to a cask drop in SFP

‘Partial implementation phase’ of AST

- Instrumentation ‘Radiation Monitoring’
- Reworded TSAS 3.3.3.1 Action b.
  - **Why?** – To allow relaxation of CTMT operability Req.s during fuel handling.
  - **Ex.** – CTMT door and hatch req.s during fuel handling, and impact on access for equipment and personnel.

‘Partial implementation phase’ of AST

Instrumentation ‘CPVIS’

- Revise **TS 3.3.4** changed applicability from “during CORE ALTERATIONS & movement of irradiated fuel assemblies…” to “MODES 1, 2, 3, and 4.”

- **Why?** - To allow relaxation of containment operability requirements while handling irradiated fuel and during core alterations.
- **Ex.** – Allowed CTMT purge ventilation to remain in service while fuel handling = improved habitability.

  - Deleted in Final phase

‘Partial implementation phase’ of AST

- <u>Plant Systems ‘Control Room Ventilation’</u>
- Revise **TS 3.7.6.1**, applicability to Modes 1 through 4 & during movement of irradiated fuel within the CNMT or spent fuel pool.
- **Why?** -Allow plant operation without the capability for control room isolation and recirculation filtration during movement of **new** fuel and movement of a **shielded cask** over the spent fuel pool cask laydown area.
- **Ex.** – allowable inleakage increased, less restrictive requirements during SFP ops.

‘Partial implementation phase’ of AST

- <u>Refueling Ops. ‘CTMT Penetrations’</u>
- Revise **TS 3.9.4**, LCO Item a, delete reference to CTMT Purge
- **Why?** - To allow movement of irradiated fuel inside CTMT with the equipment door open and without the operability of CTMT Purge valves. (No applicability to Core Alts.)
- **Ex.** – CTMT Hatch open under admin. control during fuel movement, allowing equipment movement in/out of CTMT during this time, saving many hours = shorter outage.

‘Partial implementation phase’ of AST

<u>Refueling Operations, ‘Shutdown Cooling and Coolant Circulation’</u>

- **TS 3.9.8.1**, Revise TS 3.9.8.1 to delete Note 3.c.3).b) and Action c.3.b.

- **Why? -** To eliminate the (CPVIS) as a required means of isolating CNMT penetrations.

- **Ex.** – Maintain CTMT Purge (with doors open) while moving fuel = improved habitability

‘Partial implementation phase’ of AST

- <u>Refueling Operations, ‘Shutdown Cooling and Coolant Circulation’</u>
- **TS 3.9.8.2**, “Low Water Level” Revise TS 3.9.8.2 to delete Action b.3.c).2).
- **Why? -** To eliminate the (CPVIS) CNMT purge valve isolation system as a required means of isolating CNMT penetrations.
- **Ex**. – same as above = improved habitability

‘Partial implementation phase’ of AST

- <u>Refueling Operations, ‘Storage Pool Area Ventilation System’</u>
- **TS 3.9.15**, Delete entire TS 3.9.15.
- **Why? -** To allow movement of irradiated fuel in the spent fuel pool area without satisfying current requirements for **spent fuel area integrity**, storage pool area ventilation system, and operability of an enclosure building filtration train.
- **Ex.** – SFP Integrity issues during fuel movement in SFP = time saved, fewer violations of door restrictions.

‘Full implementation phase’ overview

- Done 08/29/07
- Implement Reg. Guide 1.183 as basis for source term.
- Allow a consistent Design Basis for all accident dose assessments.
- Allow more Cont. Room In-leakage
- Allow more CTMT by-pass leakage
- Allow more RWST valve backleakage (IST)
- Increased Pri.-to-Sec. Leakrate limit
- Re-define Dose Equivalent I-131
- Allow more time, (1 hr), for Cont. Rm. Isolation & recirc.
- Allow more time for termination of CS (4 hrs)

‘Full implementation phase’ of AST

- Instrumentation, Rad. Monitoring
  - 3.3.3.1 wording change

INSTRUMENTATION

3/4.3.3 MONITORING INSTRUMENTATION

RADIATION MONITORING

LIMITING CONDITION FOR OPERATION

3.3.3.1 The radiation monitoring instrumentation channels shown in Table 3.3-6 shall be OPERABLE with their alarm/trip setpoints within the specified limits.

APPLICABILITY: As shown in Table 3.3-6.

ACTION:

a. With a radiation monitoring channel alarm/trip setpoint exceeding the value shown in Table 3.3-6, adjust the setpoint to within the limit within 2 hours or declare the channel inoperable.

b. ~~With one or more radiation monitoring channels inoperable,~~ take the ACTION shown in Table 3.3-6. The provisions of Specification 3.0.3 are not applicable.

SURVEILLANCE REQUIREMENTS

4.3.3.1.1 Each radiation monitoring instrumentation channel shall be demonstrated OPERABLE by the performance of the CHANNEL CHECK, CHANNEL CALIBRATION and CHANNEL FUNCTIONAL TEST operations during the modes and at the frequencies shown in Table 4.3-3.

4.3.3.1.2 DELETED

4.3.3.1.3 Verify the response time of the control room isolation channel at least once per 18 months.

With the number of OPERABLE channels less than the number of MINIMUM CHANNELS OPERABLE in Table 3.3-6

Basis Changes

~~LBDCR 04-MP2-016~~
~~February 24, 2005~~

BASES(Continued)

3/4.3.3 MONITORING INSTRUMENTATION

3/4.3.3.1 RADIATION MONITORING INSTRUMENTATION

The OPERABILITY of the radiation monitoring channels ensures that 1) the radiation levels are continually measured in the areas served by the individual channels and 2) the alarm or automatic action is initiated when the radiation level trip setpoint is exceeded.

The analys~~is~~e for a Steam Generator Tube Rupture, ~~Event and for a Millstone Unit No. 3~~ Loss of Coolant Accident, Rod Ejection Accident and Fuel Handling Accident credit~~s~~ the control room ventilation inlet duct radiation monitors with closure of the Unit 2 control room isolation dampers. In the event of a single failure in either channel (1 per train), the control room isolation dampers automatically close. The response time test for the control room isolation dampers includes signal generation time and damper closure. The response time for the control room isolation dampers is maintained within the applicable facility surveillance procedure.

The containment airborne radiation monitors (gaseous and particulate) provide early indication of leakage from the Reactor Coolant System as specified in Technical Specification 3.4.6.1.

‘Full implementation phase’ of AST

- Instrumentation, CPVIS
- TRMAS 3.3.4 – entire TRM Deleted

LBDCR
Pg 4 of 5

3/4.3 INSTRUMENTATION

3/4.3.4 CONTAINMENT PURGE VALVE ISOLATION SIGNAL

LIMITING CONDITION FOR OPERATION

3.3.4 In accordance with Technical Specification LCO 3.3.4, Containment Purge Valve Isolation Signal.

APPLICABILITY:

In accordance with Technical Specification LCO 3.3.4.

ACTION:

In accordance with Technical Specification LCO 3.3.4.

SURVEILLANCE REQUIREMENTS

4.3.4.5 The RESPONSE TIME of each Containment Purge Isolation signal shall be demonstrated to be within the limit as listed in TRM Table 3.3-11, in accordance with the test frequency specified in TS SR 4.3.4.5.

BASES:

In accordance with Technical Specification Bases section 3/4.3.4.

REFERENCE:

1. Technical Specification section 3/4.3.4.

Deleted

‘Full implementation phase’ of AST

- Instrumentation, CPVIS
  - 3.3.4 Delete entire Tech.Spec. & Basis

INSTRUMENTATION

CONTAINMENT PURGE VALVE ISOLATION SIGNAL

LIMITING CONDITION FOR OPERATION

3.3.4 One Containment Purge Valve Isolation Signal containment gaseous radiation monitor channel, one Containment Purge Valve Isolation Signal containment particulate radiation monitor channel, and one Containment Purge Valve Isolation Signal automation logic train shall be OPERABLE.

APPLICABILITY: MODES 1, 2, 3, and 4.

ACTION:

With no OPERABLE containment purge valve isolation signal, containment gaseous radiation monitor channel, containment purge valve isolation signal, containment particulate radiation monitor channel, and containment purge valve isolation signal automatic logic train, enter the applicable conditions and required ACTIONS for the affected valves of Technical Specification 3.6.3.1, "Containment Isolation Valves."

SURVEILLANCE REQUIREMENTS

4.3.4.1 Perform a CHANNEL CHECK on each Containment Purge Valve Isolation Signal containment gaseous and particulate radiation monitor channel at least once per 12 hours.

4.3.4.2 Perform a CHANNEL FUNCTIONAL TEST on each Containment Purge Valve Isolation Signal containment gaseous and particulate radiation monitor channel at least once per 31 days.

This surveillance shall include verification of the trip value in accordance with the following:

The trip value shall be such that the containment purge effluent shall not result in calculated concentrations of radioactivity offsite in excess of 10 CFR Part 20, Appendix B, Table II. For the purposes of calculating this trip value, a $x/Q = 5.8 \times 10^{-6}$ sec/m^3 shall be used when the system is aligned to purge through the building vent and a $x/Q = 7.5 \times 10^{-8}$ sec/m^3 shall be used when the system is aligned to purge through the Unit 1 stack, the gaseous and particulate (Half Lives greater than 8 days) radioactivity shall be assumed to be Xe-133 and Cs-137, respectively. However, the setpoints shall be no greater than 5×10^5 cpm.

‘Full implementation phase’ of AST

- RCS, RCS Leakage
  - 3.4.6.2.c Changes to leakage limit

REACTOR COOLANT SYSTEM LEAKAGE

~~March 10, 1999~~

LIMITING CONDITION FOR OPERATION

3.4.6.2 Reactor Coolant System leakage shall be limited to:

a. No PRESSURE BOUNDARY LEAKAGE,

b. 1 GPM UNIDENTIFIED LEAKAGE,

c. ~~0.035 GPM~~ 75 GPD primary-to-secondary leakage through any one steam generator, and

d. 10 GPM IDENTIFIED LEAKAGE from the Reactor Coolant System.

APPLICABILITY: MODES 1, 2, 3 and 4.

ACTION:

a. With any PRESSURE BOUNDARY LEAKAGE, be in COLD SHUTDOWN within 36 hours.

b. With any Reactor Coolant System leakage greater than any one of the above limits, excluding PRESSURE BOUNDARY LEAKAGE, reduce the leakage rate to within limits within 4 hours or be in COLD SHUTDOWN within the next 36 hours.

Basis Changes

~~LBDCR 04-MP2-016~~
~~February 24, 2005~~

REACTOR COOLANT SYSTEM

BASES

3/4.4.6 REACTOR COOLANT SYSTEM LEAKAGE

3/4.4.6.1 LEAKAGE DETECTION SYSTEMS

The RCS leakage detection systems required by this specification are provided to monitor and detect leakage from the Reactor Coolant Pressure Boundary. These detection systems are consistent with the recommendations of Regulatory Guide 1.45, "Reactor Coolant Pressure Boundary Leakage Detection Systems."

3/4.4.6.2 REACTOR COOLANT SYSTEM LEAKAGE

Industry experience has shown that while a limited amount of leakage is expected from the RCS, the unidentified portion of this leakage can be reduced to a threshold value of less than 1 GPM. This threshold value is sufficiently low to ensure early detection of additional leakage.

The 10 GPM IDENTIFIED LEAKAGE limitation provides allowance for a limited amount of leakage from known sources whose presence will not interfere with the detection of UNIDENTIFIED LEAKAGE by the leakage detection systems.

The steam generator tube leakage limit of ~~0.035 GPM~~ 75 GPD per steam generator ensures that the dosage contribution from the tube leakage will be less than the limits of ~~General Design Criteria 19 of 10CFR50 Appendix A~~ 10 CFR 50.67 in the event of either a steam generator tube rupture or steam line break. The ~~0.035 GPM~~ limit is consistent with the assumptions used in the analysis of these accidents.

PRESSURE BOUNDARY LEAKAGE of any magnitude is unacceptable since it may be indicative of an impending gross failure of the pressure boundary. Therefore, the presence of any PRESSURE BOUNDARY LEAKAGE requires the unit to be promptly placed in COLD SHUTDOWN.

Basis changes

~~LBDCR 04-MP2-016~~
~~February 24, 2005~~

REACTOR COOLANT SYSTEM

BASES

3/4.4.7 DELETE

3/4.4.8 SPECIFIC ACTIVITY

The limitations on the specific activity of the primary coolant ensure that the resulting 2 hour doses at the SITE BOUNDARY ~~will not exceed an appropriately small fraction of Part 100 limits~~ are within the dose guidelines of 10 CFR 50.67 following a steam generator tube rupture accident.

The ACTION statement permitting POWER OPERATION to continue for limited time periods with the primary coolant's specific activity > 1.0 uCi/gram DOSE EQUIVALENT I-131, but within the allowable limit shown on Figure 3.4-1, accommodates possible iodine spiking phenomenon which may occur following changes in THERMAL POWER.

10 CFR 50.67

- Requirements:
  - 1. A licensee who seeks to revise its current accident source term in design basis radiological consequence analyses, shall apply for a license amendment under section 50.90. The application shall contain an evaluation of the consequences of applicable design basis accidents previously analyzed in the FSAR.
  - 2. The NRC may issue the amendment if the analysis demonstrates with reasonable assurance:
    - An individual at the exclusion area boundary would not receive **>25 Rem TEDE**, for any 2 hr period of release.
    - An individual at the outer **LPZ** boundary would not receive **>25 Rem TEDE** for the duration of the release.
    - Control Room personnel would not receive **> 5 Rem TEDE**.

Prior to AST - LPZ vs. Exclusion Area Boundary

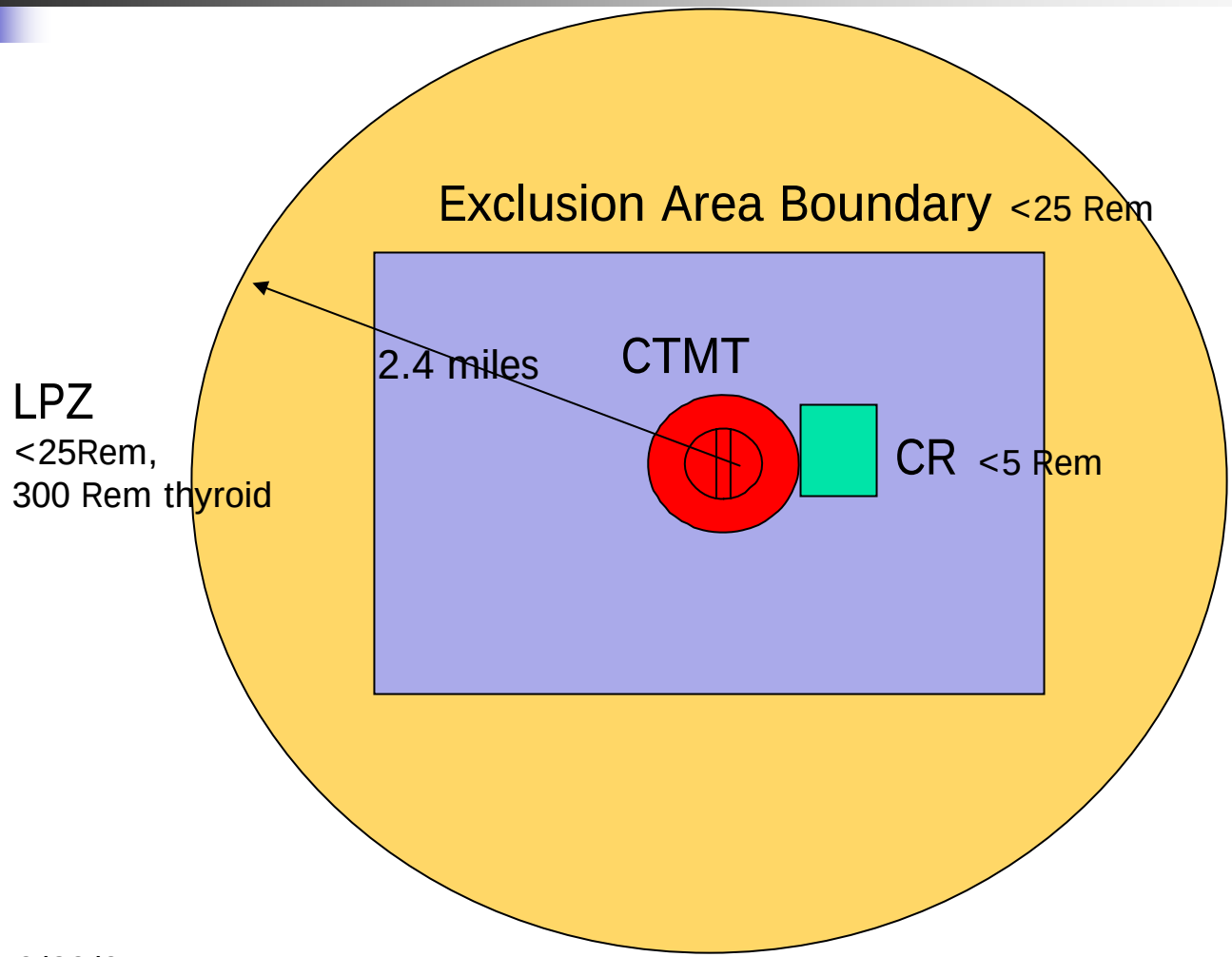

After AST - LPZ vs. Exclusion Area Boundary

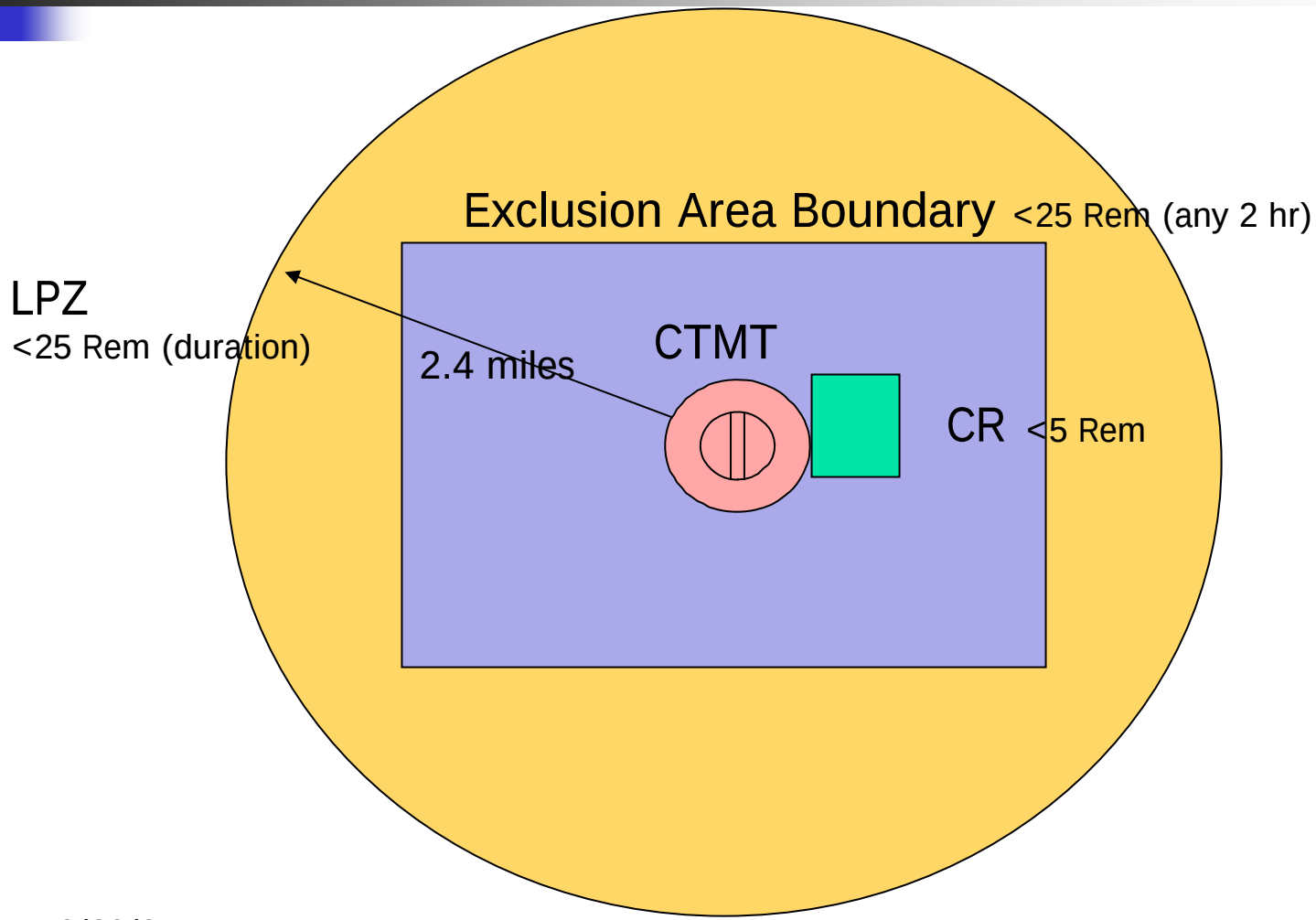

‘Full implementation phase’ of AST

- CTMT Systems, CTMT Leakage
  - 3.6.1.2 change to leakage limit, (Secondary CTMT bypass leakage)

CONTAINMENT SYSTEMS

CONTAINMENT LEAKAGE

LIMITING CONDITION FOR OPERATION

3.6.1.2 Containment leakage rates shall be limited to:

a. An overall integrated leakage rate of < L_a, 0.50 percent by weight of the containment air per 24 hours at P_a, 54 psig.

b. A combined leakage rate of < 0.60 L_a for all penetrations and valves subject to Type B and C tests when pressurized to P_a.

c. A combined leakage rate of < ~~0.0072~~ 0.014 L_a for all penetrations that are secondary containment bypass leakage paths when pressurized to P_a.

APPLICABILITY: MODES 1, 2, 3 and 4.

ACTION:

With either (a) the measured overall integrated containment leakage rate exceeding 0.75 L_a, or (b) with the measured combined leakage rate for all penetrations and valves subject to Types B and C tests exceeding 0.60 L_a, or (c) with the combined bypass leakage rate exceeding ~~0.0072~~ 0.014 L_a, restore the leakage rate(s) to within the limit(s) prior to increasing the Reactor Coolant System temperature above 200°F.

Basis changes

~~April 14, 1999~~

CONTAINMENT SYSTEMS

CONTAINMENT LEAKAGE

LIMITING CONDITION FOR OPERATION

3.6.1.2 Containment leakage rates shall be limited to:

a. An overall integrated leakage rate of < L_a, 0.50 percent by weight of the containment air per 24 hours at P_a, 54 psig.

b. A combined leakage rate of < 0.60 L_a for all penetrations and valves subject to Type B and C tests when pressurized to P_a.

c. A combined leakage rate of < ~~0.0072~~ 0.014 L_a for all penetrations that are secondary containment bypass leakage paths when pressurized to P_a.

APPLICABILITY: MODES 1, 2, 3 and 4.

ACTION:

With either (a) the measured overall integrated containment leakage rate exceeding 0.75 L_a, or (b) with the measured combined leakage rate for all penetrations and valves subject to Types B and C tests exceeding 0.60 L_a, or (c) with the combined bypass leakage rate exceeding ~~0.0072~~ 0.014 L_a, restore the leakage rate(s) to within the limit(s) prior to increasing the Reactor Coolant System temperature above 200°F.

‘Full implementation phase’ of AST

- Plant Systems, CRAC
  - 3.7.6.1 for Mode 5 & 6 wording change
  - Greater inleakage allowed, 130 CFM to 200 CFM
  - 1 Hr. **allowed** to go to Recirc.

PLANT SYSTEMS

3/4.7.6 CONTROL ROOM EMERGENCY VENTILATION SYSTEM

LIMITING CONDITION FOR OPERATION

ACTION (continued)

MODES 5 and 6, ~~and~~ or during irradiated fuel movement within containment or the spent fuel pool:**

d. With one Control Room Emergency Ventilation Train inoperable, restore the inoperable train to OPERABLE status within 7 days. After 7 days, either initiate and maintain operation of the remaining OPERABLE Control Room Emergency Ventilation Train in the recirculation mode of operation, or immediately suspend CORE ALTERATIONS, and the movement of irradiated fuel assemblies.

e. With both Control Room Emergency Ventilation Trains inoperable, or with the OPERABLE Control Room Emergency Ventilation Train required to be in the recirculation mode by ACTION d. not capable of being powered by an OPERABLE normal and emergency power source, immediately suspend CORE ALTERATIONS, and the movement of irradiated fuel assemblies.

SURVEILLANCE REQUIREMENTS (Continued)

3. Verifying that control room air in-leakage is less than 200 ~~130~~ SCFM with the Control Room Emergency Ventilation System operating in the recirculation/filtration mode.

f. After each complete or partial replacement of a HEPA filter bank by verifying that the HEPA filter banks remove greater than or equal to 99% of the DOP when they are tested in-place in accordance with ANSI N510-1975 while operating the train at a flow rate of 2500 cfm ± 10%.

g. After each complete or partial replacement of a charcoal adsorber bank by verifying that the charcoal adsorbers remove greater than or equal to 99% of a halogenated hydrocarbon refrigerant test gas when they are tested in-place in accordance with ANSI N510-1975 while operating the train at a flow rate of 2500 cfm ± 10%.

Basis changes

~~September 20, 2004~~

PLANT SYSTEMS

BASES

3/4.7.6 CONTROL ROOM EMERGENCY VENTILATION SYSTEM (Continued)

The OPERABILITY of this system in conjunction with control room design provisions is based on limiting the radiation exposure to personnel occupying the control room. For all postulated design basis accidents ~~except a Fuel Handling Accident~~, the radiation exposure to personnel occupying the control room shall be 5 rem ~~or less whole body consistent with the requirements of General Design Criteria 19 of Appendix "A," 10 CFR 50. For a Fuel Handling Accident, the radiation exposure to personnel occupying the control room shall be 5 rem~~ TEDE or less consistent with the requirements of 10 CFR 50.67

The LCO is modified by a footnote allowing the control room boundary to be opened intermittently under administrative controls. For entry and exit through doors the administrative control of the opening is performed by the person(s) entering or exiting the area. For other openings, these controls consist of stationing a dedicated individual at the opening who is in constant communication with the control room. This individual will have a method to rapidly close the opening when a need for control room isolation is indicated.

The control room radiological dose calculations use the conservative minimum acceptable flow of 2250 cfm based on the flowrate surveillance requirement of 2500 cfm ± 10%.

The LCO is applicable in MODES 1, 2, 3, 4, 5 and 6. It is also applicable during irradiated fuel movement within containment or the spent fuel pool irrespective of any plant MODE.

Basis changes

~~LBDCR 04-MP2-016~~
~~February 24, 2005~~

PLANT SYSTEMS

BASES

3/4.7.6 CONTROL ROOM EMERGENCY VENTILATION SYSTEM (Continued)

Currently there are some situations where the CREV System may not automatically start on an accident signal, without operator action. Under most situations, the emergency filtration fans will start and the CREV System will be in the accident lineup. However, a failure of a supply fan (F21A or B) or an exhaust fan (F31A or B), operator action will be required to return to a full train lineup. Also, if a single emergency bus does not power up for one train of the CREV System, the opposite train filter fan will automatically start, but the required supply and exhaust fans will not automatically start. Therefore, operator action is required to establish the whole train lineup. This action is specified in the Emergency Operating Procedures. The radiological dose calculations do not take credit for CREV System cleanup action until ~~10 minutes~~ 1 hour into the accident to allow for operator action.

When the CREV System is checked to shift to the recirculation mode of operation, this will be performed from the normal mode of operation, and from the smoke purge mode of operation.

‘Full implementation phase’ of AST

- Refueling Operations, Decay Time
  - TSAS 3.9.3.1 Basis changes only

September 20, 2004

REFUELING OPERATIONS

BASES (continued)

3/4.9.3 DECAY TIME

Insert A

The minimum requirement for reactor subcriticality prior to movement of irradiated fuel ensures that sufficient time has elapsed to allow the radioactive decay of the short-lived fission products. This decay time is consistent with the assumptions used in the accident analyses.

Insert A

decay heat load of the fuel to be within the assumptions of the spent fuel pool heat load analysis. This minimum requirement also ensures that sufficient time has elapsed to allow the radioactive decay of the short-lived fission products so that the calculated radiological dose consequences of the fuel handling accident are bounding.

‘Full implementation phase’ of AST

- Definitions – Dose Equivalent I-131
  - Some changes based on AST

AZIMUTHAL POWER TILT - T_q

1.18 AZIMUTHAL POWER TILT shall be the difference between the maximum power generated in any core quadrant (upper or lower) and the average power of all quadrants in that half (upper or lower) of the core divided by the average power of all quadrants in that half (upper or lower) of the core.

$$\text{AZIMUTHALPOWERTILT} = \left[\frac{\text{Maximum power in any core quadrant (upper or lower)}}{\text{Average power of all quadrants (upper or lower)}}\right] - 1$$

DOSE EQUIVALENT I-131

CEDE-thyroid

1.19 DOSE EQUIVALENT I-131 shall be that concentration of I-131 (micro-curie/gram) which alone would produce the same ~~thyroid~~ dose as the quantity and isotopic mixture of I-131, I-132, I-133, I-134, and I-135 actually present. The thyroid dose conversion factors used for this calculation shall be those listed ~~in Regulatory Guide 1.109 REv. 1, "Calculation of Annual Doses to Man from Routine Releases of Reactor Effluents for the Purpose of Evaluating Compliance with 10 CFR Part 50 Appendix I."~~

Insert A

Insert A to Page 1-4

under inhalation in Federal Guidance Report No. 11 (FGR11), "Limiting Values of Radionuclide Intake and Air Concentration and Dose Conversion Factors for Inhalation, Submersion and Ingestion."

FSAR Changes

- Changes to FSAR are the same as sections in Tech. Specs.
  - Waste Gas System assumptions (for a tank rupture) changed due to values of isotopes changing.
  - Changed references from 10 CFR 100 to 10 CFR 50.67
  - Changed reference to new Reg. Guides
  - Main steam Line Break assumptions changed, consistent with TS.
    - Design Basis SG leakage is 150 GPD vs. 0.035 GPM (50.4 GPD).
    - SGTR assumed to be released from Atmospheric valves or MSSVs due to Loss of Offsite power.
  - Dose calcs. Model changed from Whole Body I-131 to TEDE
  - Various tables changed to reflect AST changes.

2540 Change due to AST

- EOP 2540F
- Terminate Containment Spray
- 4.4.1 * 4. IF CS pumps are operating AND ALL of the following conditions exist:
  - _ The CS pumps have been operating for **greater than 4 hours**
  - _ Containment pressure is less than 7 psig and stable or dropping
  - _ Containment spray is not required for containment cooling
  - _ Containment high range radiation monitors not alarming:
- ‘Greater than 4 hrs’ – used to be 2 hrs and was lengthened to scrub more radio nuclides from CTMT.

Conclusion

- Health and Safety of Public and On-Site population still well within guidelines.
- Alternate Source Term changes have made life easier for the plant and Outages are shortened due to less time dealing with CTMT hatch closure issues.
- $$$ Saved – Less time to perform CTMT work, less work required to fix small CR inleakage issues, etc.

Questions

Figure 1

1. As given in CRA-00-T, describe the functions of the following Control Room Air Conditioning System control switches at Panels C-25A and C-25B, including how controlled components are affected by each mode or position of the control: (9904)

   A) CRACS Supply Fan F-21A(B)

   B) CRACS EXH Fan F31A(B)

   C) CRACS FLTR Fan F32A(B)

   D) Normal Recirc Mode (2)

   E) Emerg Fresh Air Intake Recirc Override(2)

   F) Emerg CR Smoke Purge Recirc Override(2)

2. State the initiating conditions for each of the following Control Room Air Conditioning System Alarms, and evaluate the significance of each: (9903)

   A) Train :"A"("B") CRACS in Recircualtion Block Signal (C-01)

   B) CRACS in Auto Recirc Mode (C-01)

   C) Control RM HEPA FILT A(B) DP HI (C-06)

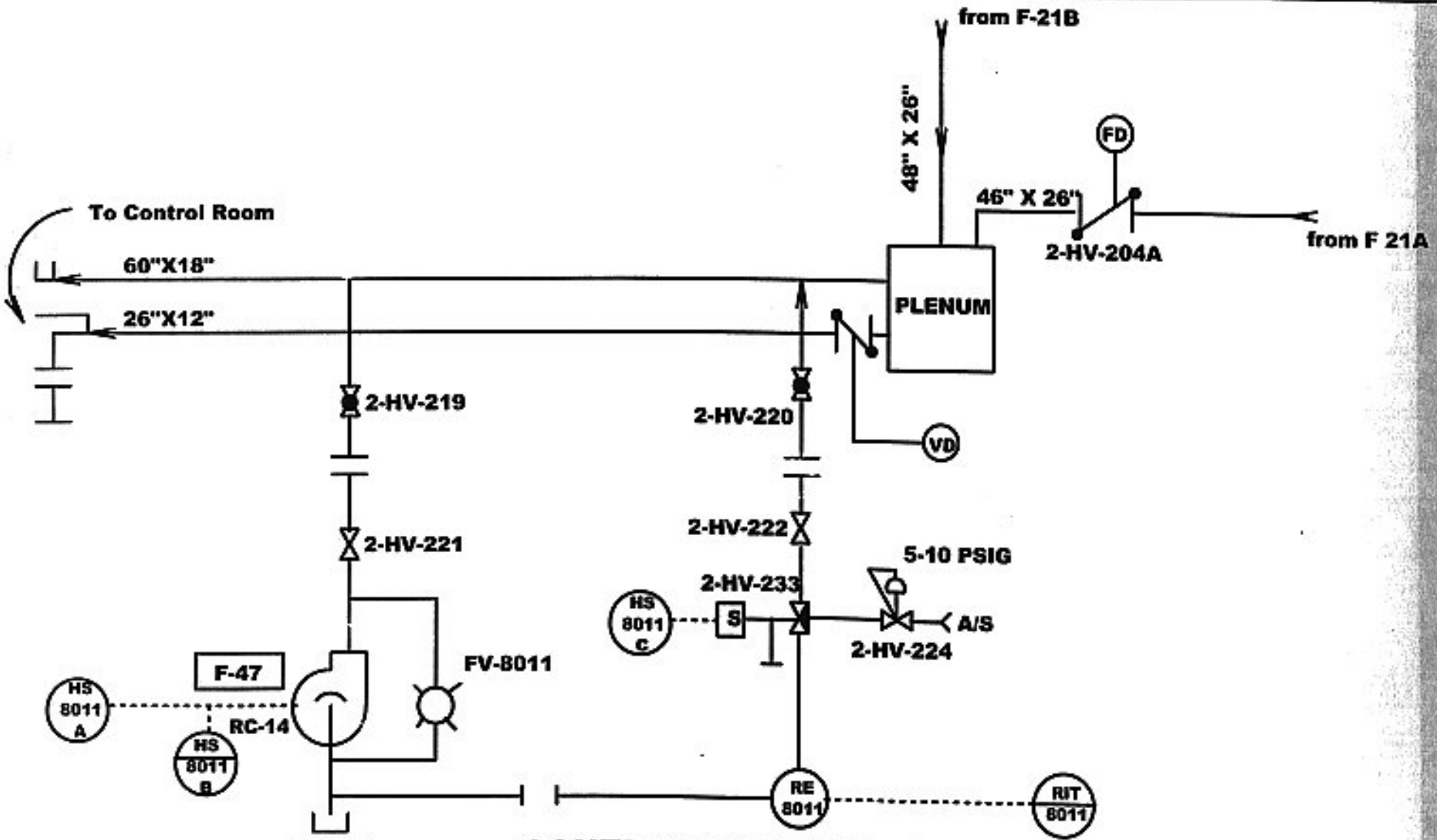

CONTROL ROOM RM - 8011

MONITOR FAN F - 47

Figure 10

M2	REVISION 0	07-10-98	98000501

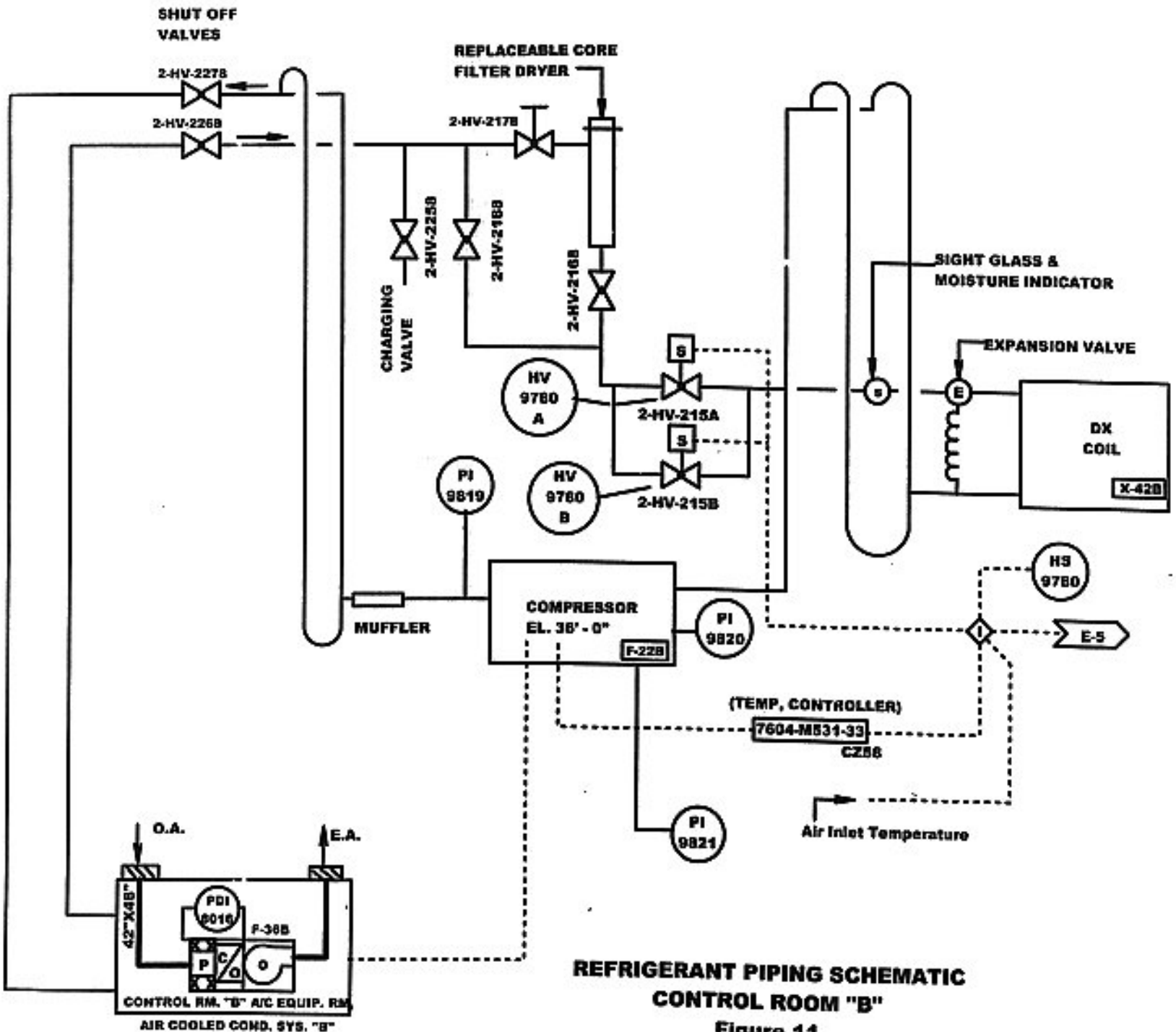

REFRIGERANT PIPING SCHEMATIC
CONTROL ROOM "B"
Figure 14

VALVE NUMBER	TYPE OPER	FUNCTION	NORMAL MODE	RECIRC MODE	SMOKE PURGE (Auto)	SMOKE PURGE (Manual During Recirc)	FRESH AIR MAKEUP (During Recirc)
2-HV-209	AO	Recirc Air Damper	OP*	OP*	OP*	OP*	OP*
2-HV-202	AO	Min O.A. Suct Damper	OP	CL	OP	CL	CL
2-HV-201	AO	Max O.A. Suct Damper	CL*	CL*	CL*	CL*	CL*
2-HV-207	AO	Disch Air to Cable Vault	OP	CL	CL	CL	CL
2-HV-208	AO	Exhaust Air	CL	CL	OP	OP	OP
2-HV-211	AO	Fresh Air Makeup to Filt Fans	CL	CL	CL	CL	OP
2-HV-210	AO	Recirc Air Suct to Filt Fans	OP	OP**	OP	OP	CL
2-HV-213	AO	Filt Fan A/B Disch X-Connect	CL	CL	CL	CL	CL
2-HV-203A	MO	F21A Disch Damper	OP/CL	OP/CL	CL	CL	OP/CL
2-HV-206A	MO	F31A Disch Damper	OP/CL	OP/CL	OP/CL	OP/CL	OP/CL
2-HV-212A	MO	F32A Disch Damper	CL	OP	CL	OP	OP
2-HV-495	AO	Max O.A. Suct Damper	OP	CL	OP	CL	OP
2-HV-496	AO	Exhaust Air	CL	CL	OP	OP	OP
2-HV-497	AO	Disch Air to Cable Vault	OP	CL	CL	CL	CL
2-HV-203B	MO	F21B Disch Damper	OP/CL	OP/CL	CL	CL	OP/CL
2-HV-206B	MO	F31B Disch Damper	OP/CL	OP/CL	OP/CL	OP/CL	OP/CL
2-HV-212B	MO	F32B Disch Damper	CL	OP	CL	OP	OP
FAN UNIT							
F-21A (F-21B)	–	Supply Fan	1 of 2 Running	1 of 2 Running	TRIPS	TRIPS	1 of 2 Running
F-31A (F-31B)	–	Exhaust Fan	1 of 2 Running	1 of 2 Running	1 of 2 Running	1 of 2 Running	1 of 2 Running
F-32A (F-32B)	–	Filter Fan	Not Running	Both** Running	Not Running	Both Running	Both Running

* Failed – Controls Inhibited
** If Recirc Manually Initiated – must start filter fan(s) manually and suction damper 2-HV-210 opens

FIGURE 12

Figure 2

3. As given in CRA-00-T: (9900)

   A) Identify the conditions which automatically transfer the Control Room Air Conditioning System from the Normal Mode to the Recirculation Mode.

   B) Describe the expected response of the system.

4. As given in CRA-00-T: (9901)

   A) Identify the condition which automatically initiates Control Room Smoke Purge.

   B) Describe the expected response of the system from a given operating condition.

5. Given plant conditions and/or parameter values, and a copy of Technical Specification, determine if any Control Room Air Conditioning LCOs are not met ad identify the appropriate action. (9896)

Figure 3

6. As given in CRA-00-T, describe the effects on the Control Room Air Conditioning System of a loss or malfunction of the following: (9905)

   A) VAC Electrical Distribution System

   B) Vital 120 VAC Electrical Distribution System

   C) Instrument Air System

   D) Radiation Elements RE 9799A and/or 9799B

   E) Smoke Detectors AE 8358 and/or AE 8362

Figure 4

7. As given in CRA-00-T, describe how operation of the Control Room Air Conditioning System following a loss-of-coolant accident without one complete facility-related component train in service (i.e., all "A" components or all "B" components)can compromise the ability to clean up the Control Room atmosphere. (9932)

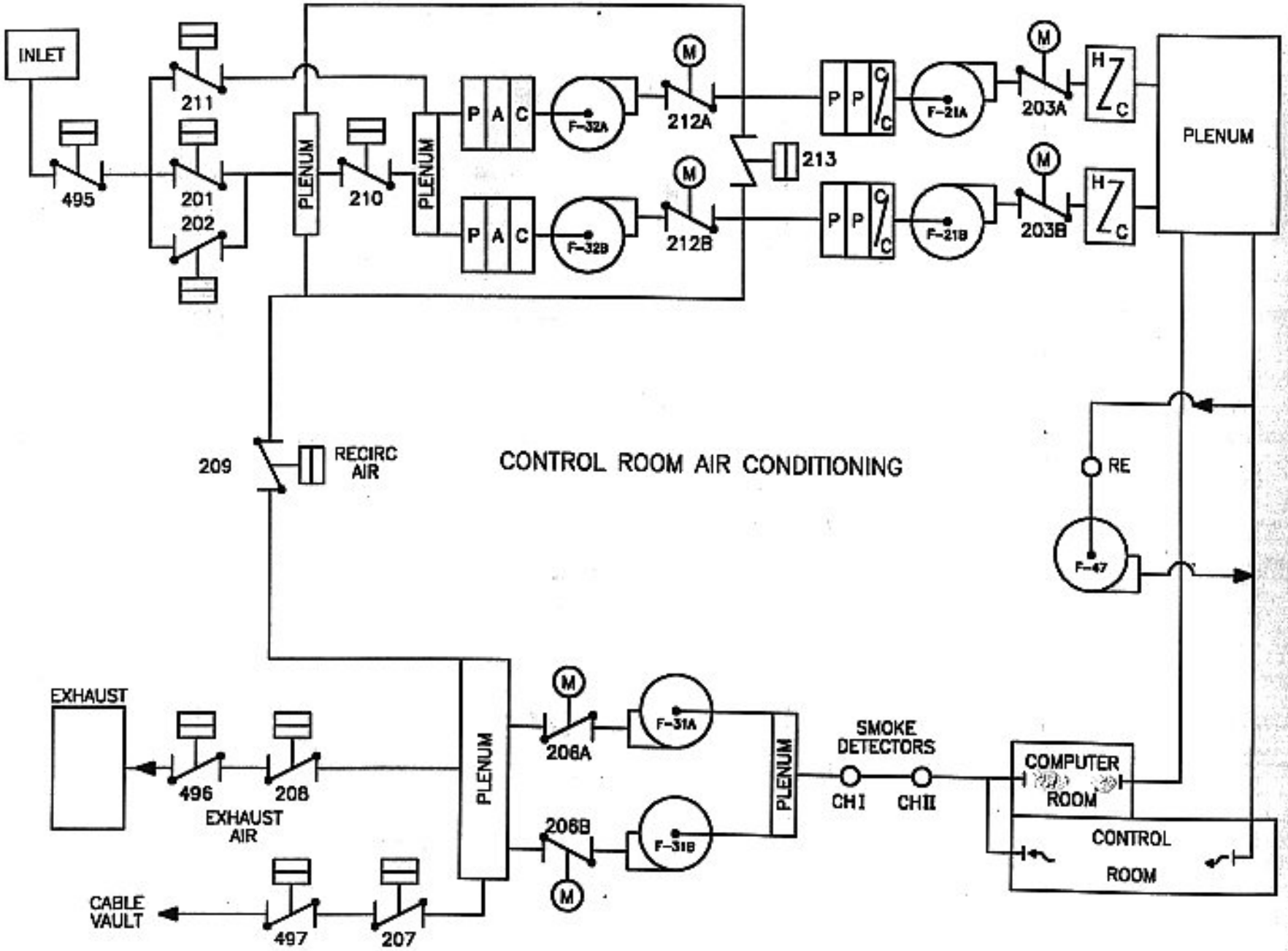

NOTE: ALL VALVE DESIGNATORS BEGIN WITH "2-HV-"

FIGURE 5

M2	09/04/98	REVISION 2	86003096

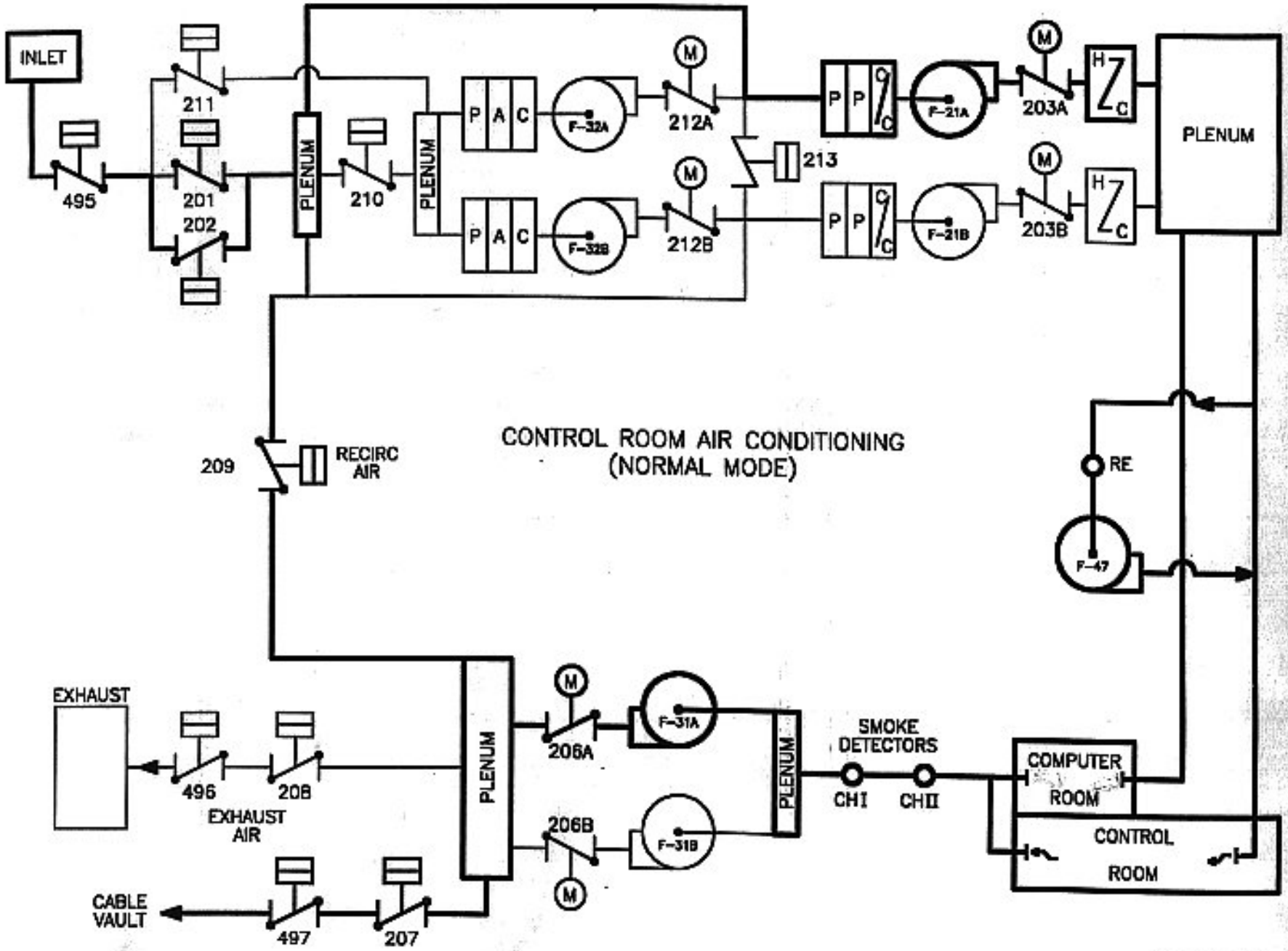

NOTE: ALL VALVE DESIGNATORS BEGIN WITH "2-HV-"

FIGURE 6

M2	09/04/98	REVISION 2

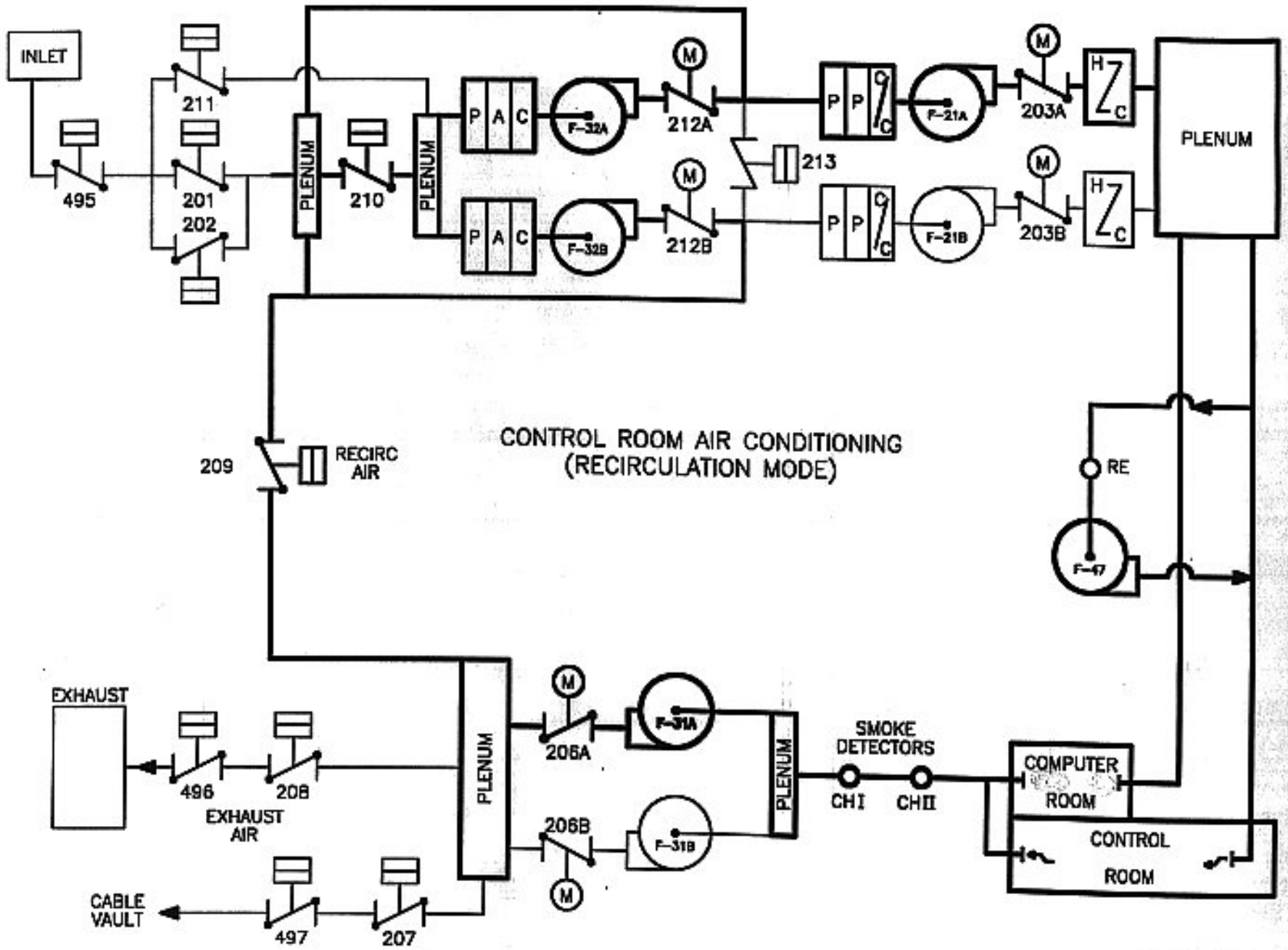

NOTE: ALL VALVE DESIGNATORS BEGIN WITH "2-HV-"

FIGURE 7

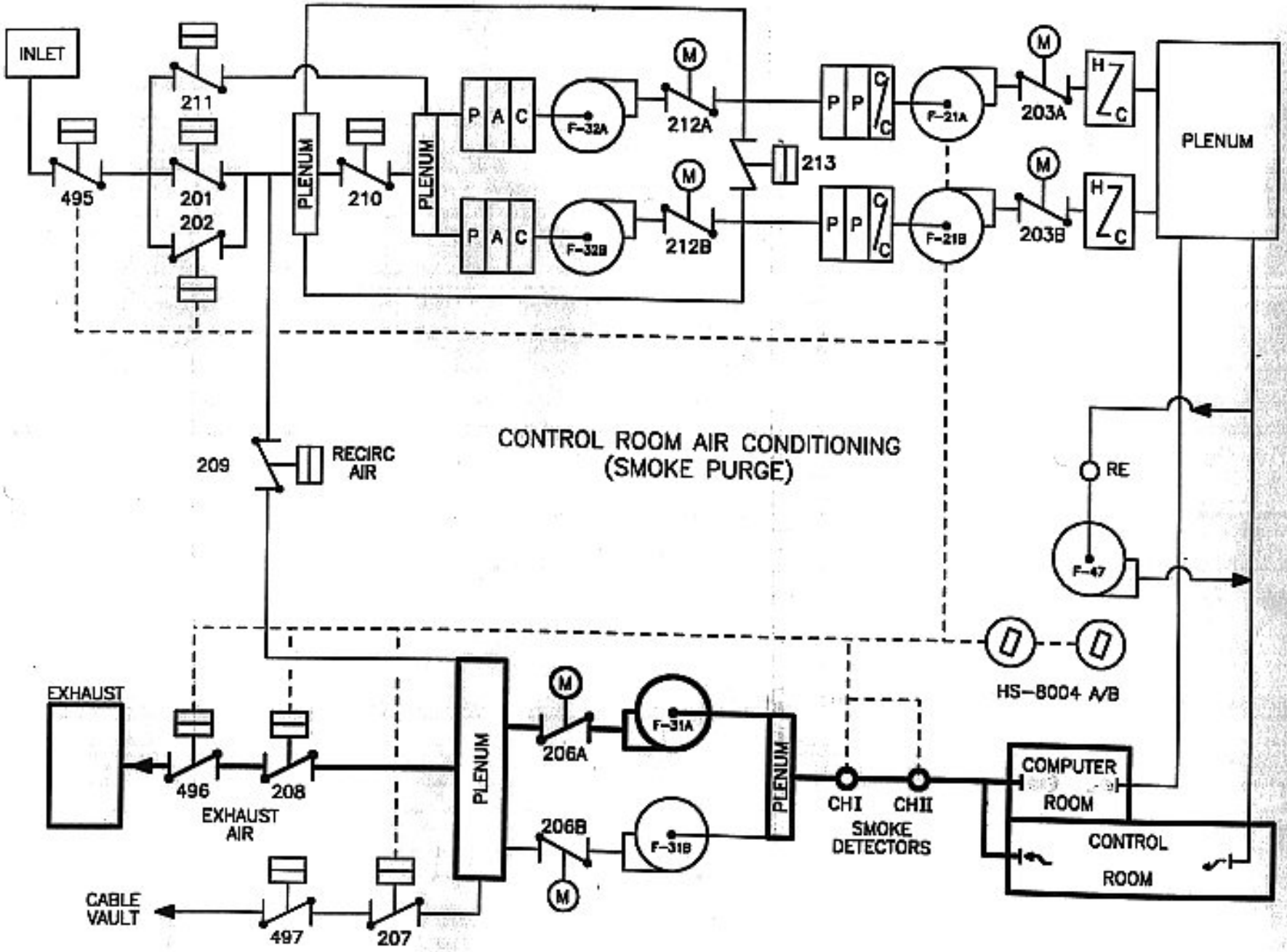

NOTE: ALL VALVE DESIGNATORS BEGIN WITH "2-HV-"

FIGURE 8

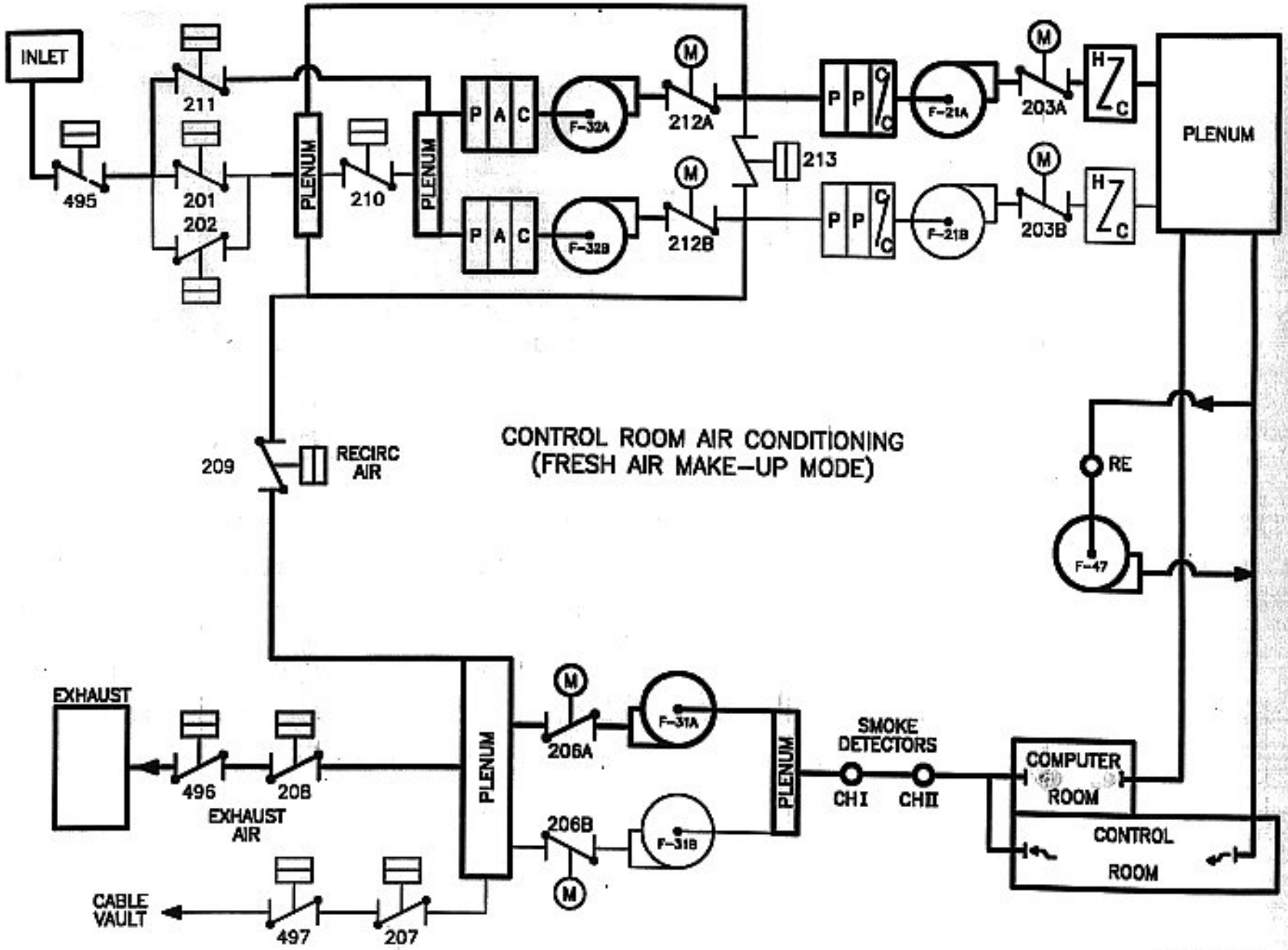

NOTE: ALL VALVE DESIGNATORS BEGIN WITH "2-HV-"

FIGURE 9

MILLSTONE POWER STATION

ABNORMAL OPERATING PROCEDURE

Please see comments on pages 3, 6 and 7.

Fuel Handling Accident

AOP 2577

Rev. 008 – 02

STOP THINK ACT REVIEW

Approval Date: 07/23/07

Effective Date: 08/29/07

Level of Use
Continuous

TABLE OF CONTENTS

1.0 PURPOSE 3
2.0 ENTRY CONDITIONS 4
3.0 Fuel Handling Accident in the Containment 5
4.0 Fuel Handling Accident in the Spent Fuel Pool 9
ATTACHMENTS AND FORMS
Attachment 1 “Placekeeper” 13
Attachment 2 “EBFS Operating in AEAS Mode” 14
Attachment 3 “Fuel Handling Area Integrity” 15

This is what the original question was based on.

1.0 PURPOSE

1.1 Objective

This procedure provides instructions for a fuel handling accident in containment or the spent fuel pool. The isolation of containment or spent fuel pool, will occur within 30 minutes following a fuel handling accident.

1.2 Discussion

The design basis fuel handling accident occurs 72 hours following shutdown and results in the failure of all fuel rods.

Control Room radiological exposure following a fuel handling accident in containment is calculated on having at least one train of CRACS operating in the recirculation mode within 10 minutes of the accident.

During the lecture on "Alternate Source Term" (C07601) the Examinees were told this had changed to within 1 hour.

Containment Closure is established when all of the following conditions exist:

- The equipment door is closed and held in place by a minimum of four bolts or the outage equipment door is installed.
- A minimum of one door in each airlock is closed.
- Each penetration providing direct access from the containment atmosphere to the outside atmosphere is either:
  - Closed by an isolation valve, blind flange, manual valve, or special device, or
  - Capable of being closed by an operable automatic containment purge valve.

1.3 Applicability

This procedure is applicable any time fuel is being moved within the spent fuel pool or containment.

2.0 ENTRY CONDITIONS

Fuel Handling Accident may be entered when **ANY** of the following conditions exist:

- Communications with personnel inside containment indicate a fuel handling accident has occurred
- Communications with personnel inside the spent fuel pool area indicate a fuel handling accident has occurred
- RM-7891, containment refuel floor area radiation monitor, alarms
- RM-8123A or RM-8262A, containment particulate radiation monitor, alarms
- RM-8123B or RM-8262B, containment gaseous radiation monitor, alarms
- RM-7890, personnel access area radiation monitor, alarms and can *not* be attributed to transported radioactive materials in the vicinity
- RM-8240 (east) or RM-8241 (west), containment high range radiation monitor, alarms
- RM-8145A, spent fuel pool particulate radiation monitor, alarms
- RM-8145B, spent fuel pool gaseous radiation monitor, alarms
- RM-8139, spent fuel pool area radiation monitor, alarms
- RM-8142, spent fuel pool area radiation monitor, alarms
- RM-8156, spent fuel pool area radiation monitor, alarms
- RM-8157, spent fuel pool area radiation monitor, alarms

3.0 Fuel Handling Accident in the Containment

INSTRUCTIONS	CONTINGENCY ACTIONS
___3.1 REQUEST Health Physics Department perform the following: • Evacuate personnel from SG primary sides and loop areas • Coordinate an evacuation of personnel in containment	
___3.2 SOUND the Containment Evacuation Alarm for approximately 30 seconds.	
___3.3 ANNOUNCE the following over plant page system: "Attention all personnel, a fuel handling accident has occurred inside Unit 2 containment. All personnel evacuate Unit 2 containment."	
___3.4 IF purging of containment is in progress, VERIFY the following are closed:[✤] • AC-4, Containment Outboard Isolation Damper • AC-5, Containment Inboard Isolation Damper • AC-6, Containment Inboard Isolation Damper • AC-7, Containment Outboard Isolation Damper	

INSTRUCTIONS | CONTINGENCY ACTIONS

___3.5 VERIFY at least *one* train of CRACS operating in recirculation mode. (C25)

Facility 1

- HV−203A, Fan F−21A exhaust damper is open.
- Fan F−21A, supply fan is running.
- HV−206A, Fan F−31A exhaust damper is open.
- Fan F−31A, exhaust fan is running.
- HV−212A, Fan F−32A exhaust damper is open.
- Fan F−32A, filter fan is running.
- HV−202, minimum fresh air damper is closed.
- HV−207, cable vault exhaust damper is closed.
- HV−208, exhaust air damper is closed.

(continue)

Step 3.5, which instructs the operators to place the CRACS in "Recirculation mode", is <u>before</u> Step 3.6, which instructs the operators to verify "Containment Closure"

Step 3.6 on next page

②

INSTRUCTIONS | CONTINGENCY ACTIONS

3.5 (continued)

Facility 2

- HV−203B, Fan F−21B exhaust damper is open.
- Fan F−21B, supply fan is running.
- HV−206B, Fan F−31B exhaust damper is open.
- Fan F−31B, exhaust fan is running.
- HV−212B, Fan F−32B exhaust damper is open.
- Fan F−32B, filter fan is running.
- HV−495, fresh air damper is closed.
- HV−496, exhaust air damper is closed.
- HV−497, cable vault exhaust damper is closed.

___3.6 VERIFY Containment Closure is established.

___3.7 Refer To MP-26-EPI-FAP06, "Classification and PARs," and DETERMINE reportability requirements.

Step 3.6, which instructs the operators to verify "Containment Closure", is after Step 3.5, which instructs the operators to place the CRACS in "Recirculation mode".

②

INSTRUCTIONS	CONTINGENCY ACTIONS
___3.8 DEVELOP a plan for recovery of the fuel assembly, addressing as a minimum the following items: • Personnel safety and exposure • Assembly location • Assembly physical condition and orientation • Radiation levels • Airborne activity levels • Any other items needed for recovery of the assembly, depending upon the situation.	
___3.9 WHEN conditions allow, PERFORM applicable actions to enter containment and recover the fuel assembly.	

4.0 Fuel Handling Accident in the Spent Fuel Pool

INSTRUCTIONS	CONTINGENCY ACTIONS
___4.1 REQUEST Health Physics coordinate an evacuation of personnel from the spent fuel pool area.	
___4.2 ANNOUNCE the following over plant page system: "Attention all personnel, a fuel handling accident has occurred inside Unit 2 spent fuel pool. All personnel evacuate Unit 2 spent fuel pool area."	
___4.3 Refer To Attachment 2 and VERIFY EBFS is operating in the AEAS mode.	

INSTRUCTIONS

CONTINGENCY ACTIONS

___4.4 VERIFY at least *one* train of CRACS operating in recirculation mode. (C25)

Facility 1

- HV−203A, Fan F−21A exhaust damper is open.
- Fan F−21A, supply fan is running.
- HV−206A, Fan F−31A exhaust damper is open.
- Fan F−31A, exhaust fan is running.
- HV−212A, Fan F−32A exhaust damper is open.
- Fan F−32A, filter fan is running.
- HV−202, minimum fresh air damper is closed.
- HV−207, cable vault exhaust damper is closed.
- HV−208, exhaust air damper is closed.

(continue)

②

INSTRUCTIONS | CONTINGENCY ACTIONS

4.4 (continued)

Facility 2

- HV−203B, Fan F−21B exhaust damper is open.
- Fan F−21B, supply fan is running.
- HV−206B, Fan F−31B exhaust damper is open.
- Fan F−31B, exhaust fan is running.
- HV−212B, Fan F−32B exhaust damper is open.
- Fan F−32B, filter fan is running.
- HV−495, fresh air damper is closed.
- HV−496, exhaust air damper is closed.
- HV−497, cable vault exhaust damper is closed.

___4.5 Refer To MP-26-EPI-FAP06, “Classification and PARs,” and DETERMINE reportability requirements.

___4.6 Refer To Attachment 3 and VERIFY fuel handling area integrity.

②

INSTRUCTIONS	CONTINGENCY ACTIONS
___4.7 DEVELOP a plan for recovery of the fuel assembly, addressing as a minimum the following items: • Personnel safety and exposure • Assembly location • Assembly physical condition and orientation • Radiation levels • Airborne activity levels • Any other items needed for recovery of the assembly, depending upon the situation.	
___4.8 WHEN conditions allow, PERFORM applicable actions to enter the spent fuel pool area and recover the fuel assembly.	

− FINAL −

Attachment 1
Placekeeper
(Sheet 1 of 1)

STEP	INSTRUCTIONS	PAGE	START	DONE
3.0	**Fuel Handling Accident in the Containment**	5		
3.1	Health Physics to evacuate personnel.	5	❑	❑
3.2	Sound the Containment Evacuation Alarm.	5	❑	❑
3.3	Announce containment evacuation.	5	❑	❑
3.4	If purging, VERIFY AC-4, AC-5, AC-6, and AC-7 closed.	5	❑	❑
3.5	One complete facility of CRACS in recirc mode.	6	❑	❑
3.6	VERIFY Containment Closure is established.	7	❑	❑
3.7	Refer To MP-26-EPI-FAP06, “Classification and PARs.”	7	❑	❑
3.8	Develop a plan for recovery of the fuel assembly.	8	❑	❑
3.9	Enter containment and recover the fuel assembly.	8	❑	❑
4.0	**Fuel Handling Accident in the Spent Fuel Pool**	9		
4.1	Health Physics coordinate evacuation of SFP area.	9	❑	❑
4.2	Announce spent fuel pool area evacuation.	9	❑	❑
4.3	VERIFY EBFS is operating in the AEAS mode.	9	❑	❑
4.4	One complete facility of CRACS in recirc mode.	10	❑	❑
4.5	Refer To MP-26-EPI-FAP06, “Classification and PARs.”	11	❑	❑
4.6	Refer To Att. 3 and VERIFY fuel handling area integrity.	11	❑	❑
4.7	Develop a plan for recovery of the fuel assembly.	12	❑	❑
4.8	Enter spent fuel pool area and recover fuel assembly.	12	❑	❑

1

Attachment 2
EBFS Operating in AEAS Mode

(Sheet 1 of 1)

Item	Required Condition
At least one OPERABLE EBFS Train operating in the Auxiliary Exhaust Mode	As indicated below for Faciity 1 and / or Facility 2

Item	Location	Required Condition
Facility 1		
EBFS "FAN A, F−25A"	C−01	On
HDR A ISOL, EB−51		Open
EBFS SUCT DMPR, EB−50		Closed
FAN A DIS DMPR, EB−52		Open
FUEL AREA SUCT DMPR, EB−60		Open
CTMT CLEANUP TO EBFS, EB−73		Closed
COND AIR RMVL MILLSTONE STACK, EB−56	C−06	Closed
FUEL HANDLE AREA SUPPLY FAN, F−20		Off
MAKE−UP DMPR, EB−171		Closed
38′6° Aux Bldg floor plugs (2)		Installed

Facility 2		
EBFS "FAN B, F−25B"	C−01	On
HDR A ISOL, EB−41		Open
EBFS SUCT DMPR, EB−40		Closed
FAN A DIS DMPR, EB−42		Open
FUEL AREA SUCT DMPR, EB−61		Open
CTMT CLEANUP TO EBFS, EB−72		Closed
COND AIR RMVL MILLSTONE STACK, EB−55	C−06	Closed
FUEL HANDLE AREA SPLY FAN, F−20		Off
MAKE−UP DMPR, EB−171		Closed
38′6° Aux Bldg floor plugs (2)		Installed

Attachment 3
Fuel Handling Area Integrity
(Sheet 1 of 1)

Required Condition: The following doors are closed:			
Door #	**Elev.**	**Type**	**Area Serviced**
(291) 205−14−007	14′6°	Double Door	SFP Skimmer System
(294) 205−14−008	14′6°	Single Door	"A" DG Room
(292) 205−14−016 or (207) 205−14−017	14′6°	Double Door or 8′ Rollup Door	Solidification System or Outside Access
205−14−015	14′6°	8′ Rollup Door	To Drumming Room
(208) 205−14−019	14′6°	16′ Rollup Door	Railway Access
(293) 205−14−021	14′6°	Double Door	Health Physics Area
N/A	38′6°	Double Sliding Door	Elevator
(297) 205−38−001	38′6°	Double Door	North Stairwell
205−56−002	55′6°	Hatch	Top of North Stairwell
205−54−001	55′6°	Single Door	Elevator Machinery Room
(296) 205−38−009	38′6°	Single Door	Aux. & Radwaste HVAC
(295) 205−38−008	38′6°	Double Door/Rollup	
(298) 205−38−003	38′6°	Single Door	Penetration Room
(299) 205−38−005	38′6°	Double Door	Main Exhaust Fan Room
(247) 205−38−007	38′6°	Single Door	South Stairwell
(253) 205−71−001	55′6°	Single Door	Roof above DG Day Tanks
(254) 205−71−002	55′6°	Single Door	Roof above Storage Floor
(274) 205−38−006	38′6°	Single Door	Area below Mezzanine
Refer To OPS−FH 216 for ongoing SFP ventilation boundary work.			

|②

MILLSTONE POWER STATION

GENERAL OPERATING PROCEDURE

See pages 20 and 21 for changes made to this procedure based on the change to the Alternate Source Term

Unit 2 EOP User's Guide

OP 2260

Rev. 009 – 03

The objective of this procedure is to provide guidance to the operator for Millstone Unit 2 Emergency Operating Procedure (EOP) usage.

STOP THINK ACT REVIEW

Approval Date: 10/28/08

Effective Date: 10/30/08

Level of Use
Information

Unit 2 EOP User's Guide

TABLE OF CONTENTS

1. INSTRUCTIONS 2
   1.1 Definitions 2
   1.2 Responsibility 3
   1.3 Major Elements of EOP System 5
   1.4 Command and Control 9
   1.5 Technical Specifications (T/S) 10
   1.6 Monitoring and Maintaining Plant Conditions 10
   1.7 Communications 11
   1.8 Manually Initiating and Blocking ESAS 12
   1.9 Procedure Usage 12
   1.10 Dynamic Evolutions Concurrent with Entry to EOP 16
   1.11 Emergency Action Level (EAL) Classifications in EOPs 17
2. REFERENCES 18
3. COMMITMENTS 18
4. SUMMARY OF CHANGES 19
   Attachment 1, "EOP 2525, Standard Post Trip Actions," Implementation Guide" 21
   Attachment 2, "EOP 2528, "Loss of Offsite Power/Loss of Forced Circulation," Implementation Guide" 31
   Attachment 3, "EOP 2530, "Station Blackout," Implementation Guide" . 33
   Attachment 4 "EOP 2532, "Loss of Coolant Accident," Implementation Guide" 36
   Attachment 5, "EOP 2534, "Steam Generator Tube Rupture," Implementation Guide" 40
   Attachment 6, "EOP 2536, "Excess Steam Demand Event," Implementation Guide" 45
   Attachment 7, "EOP 2537, "Loss of All Feedwater," Implementation Guide" 48
   Attachment 8, "EOP 2540, "Functional Recovery," Implementation Guide" 51
   Attachment 9, "Resource Assessment Trees (RATs) Implementation Guidance" 57

1. INSTRUCTIONS

1.1 **Definitions**

1.1.1 Safety Function – a set of conditions or actions needed to prevent core damage or minimize radiation releases to the general public. If all safety function acceptance criteria are satisfied, the safety of the public is preserved. The specific Millstone Unit 2 Safety Functions are:

- ❑ Reactivity Control
- ❑ Maintenance of Vital Auxiliaries
- ❑ Inventory Control
- ❑ Pressure Control
- ❑ Core Heat Removal
- ❑ RCS Heat Removal
- ❑ Containment Isolation
- ❑ Containment Temperature and Pressure Control

(In the Functional Recovery Procedure, Core Heat Removal and RCS Heat Removal are combined under the single safety function of Heat Removal.)

1.2 **Responsibility**

1.2.1 Operations Manager

Establishes policies and provides management directives for station activities that affect the Emergency Operating Procedures

1.2.2 Supervisor Nuclear Shift Operations

Ensures this document remains current and accurately reflects Operations Management expectations for [performance of steps within the EOPs.

1.2.3 Supervisor Nuclear Training

Ensures expectations outlined in this document are reinforced during training.

1.2.4 EOP Coordinator

- ❑ Updates EOP User's Guide.
- ❑ Notifies all Licensed Operators of any changes to existing expectations or any new expectations.

1.2.5 Shift Manager (SM)

- ❑ Provide overview and direction of all recovery actions in accordance with station procedures.
- ❑ Ensure overall compliance with this procedure.
- ❑ Be cognizant of overall plant status and is responsible for the initial implementation of the Emergency Plan.

1.2.6 Unit Supervisor (US)

Directs Operations department personnel in the performance of the appropriate Emergency Operating Procedure.

1.2.7 Shift Technical Advisor

- ❑ Assess plant conditions, perform an initial assessment of the Safety Functions for entry into any ORP or FRP and report status to the US.
- ❑ Provide the Shift Manager with technical and Emergency Plan assistance and concurrence.
- ❑ Independently monitor and evaluate Safety Functions.
- ❑ Provide feedback to the US, as necessary, to ensure correct diagnosis.
- ❑ Performs an independent assessment of plant conditions during SPTAs using Diagnostic Flowchart.
- ❑ Provide feedback to the US, as necessary, to ensure correct diagnosis.
- ❑ Performs an independent assessment of initial success paths selected in FRPs.
- ❑ Maintain an overall event perspective.

1.2.8 Control Board Operators

- ❑ The PPO is primarily responsible for the Reactivity Control, RCS Inventory Control, RCS Pressure Control, Core Heat Removal, Containment Isolation, and Containment Temperature and Pressure Control Safety Functions.
- ❑ The SPO is primarily responsible for the Vital Auxiliaries and RCS Heat Removal Safety Functions.

1.3 Major Elements of EOP System

1.3.1 Standard Post Trip Actions

EOP 2525 − Standard Post Trip Actions (SPTA) provides the entry point for all EOPs for events initiated in MODE 1 and 2. However, when entering the EOPs in MODE 3 or 4, the US may go straight to the Diagnostics Flowchart, an ORP, or the FRP, since the Immediate Action Instruction acceptance parameters are based on a reactor trip from power operation.

1.3.2 Optimal Recovery Procedures (ORPs)

a. ORPs are used to treat a single, specific faulted condition which is identified or diagnosed by the operators following a reactor trip and performance of SPTAs (MODE 1 and 2) and the Diagnostic Flowchart, or following entry from a MODE 3 or 4 event for which the Entry Conditions are met.

b. Each ORP is designed to accommodate minor failures that do not present major complications (e.g., failure of the automatic pressurizer level control system). The goal of the recovery actions is to place the plant in a safe, stable condition.

c. The emphasis in the ORPs is on treatment of a set of symptoms according to an optimal strategy, as contrasted to treatment of a specific event. One of the first recovery actions will be to assess the Safety Functions against specific acceptance criteria using the Safety Function Status Checklist (SFSC).

d. Simultaneous performance of more than one ORP is prohibited. The FRP is used for multiple events (except as noted below).

e. Certain events do not require offsite power in order to adequately mitigate the effects of the event. For this reason, if a loss of offsite power occurs concurrently with a LOCA, SGTR, ESD, or LOAF and on−site emergency power is available; then the diagnosed ORP should be entered. LOOP/LOFC should only be entered when it is the only event in progress.

f. The following are the Unit 2 ORPs:

- ❑ EOP 2526 – Reactor Trip Recovery (RTR)
- ❑ EOP 2528 – Loss of Offsite Power/Loss of Forced Circulation (LOOP/LOFC)
- ❑ EOP 2530 – Station Blackout (SBO)
- ❑ EOP 2532 – Loss of Coolant Accident (LOCA)
- ❑ EOP 2534 – Steam Generator Tube Rupture (SGTR)
- ❑ EOP 2536 – Excess Steam Demand Event (ESDE)
- ❑ EOP 2537 – Loss of All Feedwater (LOAF)

1.3.3 Functional Recovery Procedure (FRP)

a. FRPs provide guidance for undiagnosed events, multiple events or when actions taken in other EOPs are not satisfying their respective SFSC. FRPs are written to verify the satisfactory control or restoration of all Safety Functions during any casualty. The FRP makes it possible for the user to establish and maintain a safe plant configuration without the need to diagnose the specific event (or events) in progress.

b. The FRP may be entered from any of the following conditions:

- ❑ If diagnosis of a single event is not possible, the FRP shall be entered directly following a reactor trip and performance of SPTAs (MODE 1 and 2) and the Diagnostic Flowchart, or following entry from a MODE 3 or 4 event for which the Entry Conditions are met.
- ❑ The FRP might also be entered from an ORP if an ORP had been initially selected but was subsequently found to be inadequate. If the SFSC Acceptance Criteria are not satisfied at any time, then the US should evaluate the need to implement the FRP.
- ❑ If two successive SFSC criteria are not satisfied and actions to restore the challenged Safety Function are not successful, then transition to the FRP is required.

c. The US reviews the status of all Safety Functions by checking control board or SPDS indications against acceptance criteria for each Safety Function. The US will implement success paths for all Safety Functions based on current plant conditions, utilizing the Resource Assessment Trees. The success paths chosen are recorded on the Safety Function Tracking Page.

d. The following are the Unit 2 FRPs:

- ❑ EOP 2540 − Functional Recovery
- ❑ EOP 2540A − Functional Recovery of Reactivity Control
- ❑ EOP 2540B − Functional Recovery of Vital Auxiliaries (AC and DC Power)
- ❑ EOP 2540C1 − Functional Recovery of RCS Inventory Control
- ❑ EOP 2540C2 − Functional Recovery of RCS Pressure Control
- ❑ EOP 2540D − Functional Recovery of Heat Removal
- ❑ EOP 2540E − Functional Recovery of Containment Isolation
- ❑ EOP 2540F − Functional Recovery of Containment Temperature and Pressure Control
- ❑ EOP 2540H − Long Term Actions

1.3.4 Standard Appendices (SA)

- ❑ EOP 2541 − EOP Standard Appendices (SA) provides the control room staff with an easily located set of instructions that may be needed during recovery in the EOPs and minimizes the simultaneous use of other procedures.

1.3.5 Diagnostic Flowchart (EOP 2541, Appendix 1)

a. The Diagnostic Flowchart is an initial evaluation of plant status following SPTA. It assists the US in deciding whether to implement an appropriate ORP or to implement the FRPs.

b. The operators should consider past and present plant conditions, and trends, when answering Diagnostic Flowchart decision blocks.

c. If all Safety Functions are being satisfied, then only an uncomplicated reactor trip has occurred. The US may either transition directly to the Reactor Trip Recovery (RTR) procedure or use the Diagnostic Flowchart to confirm the initial evaluation.

d. If one or more Safety Functions did not meet the acceptance criteria of SPTAs (i.e., a Contingency Action was performed), then the US must use the Diagnostic Flowchart to determine the appropriate procedure to implement. However, if a Contingency Action was taken, the US should determine if an equipment malfunction is the reason for performing the Contingency Action or an actual event is in progress.

e. The Diagnostic Flowchart may be used at the discretion of the US prior to entering the EOPs from MODE 3 or 4.

1.3.6 Safety Function Status Checklist (SFSC)

a. The SFSC in each ORP and in the FRP, is used by the operating crew to continuously assess the status of Safety Functions.

b. The SFSC ensures that the initial diagnosis was correct and checks that all Safety Functions are being satisfied. By satisfying any condition of the SFSC Acceptance Criteria (Condition 1, Condition 2, or Condition 3, if applicable), the operating staff is assured that the actions being taken are maintaining the plant in a safe condition.

c. The STA performs the initial assessment of the Safety Functions upon entering the ORP and when directed to in the FRP, and is required to perform a check every 15 minutes and notify the US and SM of Safety Function status when completed. Safety Functions not met or in jeopardy shall be continuously monitored using the SFSC.

d. The operators may stay in an ORP for <u>any</u> of the following conditions:

- ❑ The reason for not meeting the Safety Function is known and operator action produces immediate response toward satisfying the failed Safety Function. An immediate response is when a parameter is trending towards satisfying the failed Safety Function.

- ❑ If a single event is in progress and transitioning to the FRP will provide no additional guidance to correct the failed Safety Function. A shift brief should be performed, including the SM, to announce this decision.

e. If SFSC Acceptance Criteria are <u>not</u> satisfied OR a parameter has <u>not</u> changed from one performance of the SFSC to the next, following operator actions to satisfy the Safety Function, the operators are required to perform <u>any</u> of the following, as necessary:

- ❑ Take corrective actions to satisfy the Safety Functions (this may require pulling an asterisk step forward)

- ❑ Re−diagnose in order to implement another ORP (use Diagnostic Flowchart)

- ❑ Transition directly to the FRP (without use of Diagnostic Flowchart)

1.3.7 Attachments 1 through 9 of this procedure provide an overview of EOP strategies, operator credited actions, general expectations and guidance on steps that may require some explanation for EOP implementation. It is not intended to provide direction on how every step in the EOPs is to be performed.

1.4 **Command and Control**

1.4.1 Providing direction and formulating success path strategy can be the function of either the SM or the US. Each should be aware of the plant conditions and actions being taken.

1.4.2 The US shall normally direct specific EOP use and actions and maintain command and control.

1.4.3 The SM shall normally direct Emergency Plan actions and maintain an overall event perspective.

1.4.4 If during the event it becomes necessary to provide assistance to the board operators, this assistance shall be provided by the US or an additional operator in all cases. The SM shall always maintain his overall perspective of plant conditions to make a determination of the event in progress.

1.5 **Technical Specifications (T/S)**

1.5.1 The EOPs are designed to maintain plant safety through maintenance of Safety Functions and to provide direction for the safe operation of the plant. During the early phase of an emergency, the performer's attention has to be directed to completing the procedure to mitigate the event, and not be distracted by documenting T/S LCO Action Statements. Documentation of TSAS entered can be reconstructed later from procedures and rough logs, as long as awareness of applicable TSAS is maintained by the crew.

1.5.2 T/S are limits intended to ensure that plant configuration at the start of an accident is consistent with Design Basis Accident assumptions. While in EOPs, maintaining the Safety Function is of a higher priority than maintaining T/S compliance.

1.5.3 The SM or US may intentionally render T/S required equipment inoperable as directed by the EOPs and shall evaluate T/S prior to exiting the EOPs.

1.6 **Monitoring and Maintaining Plant Conditions**

1.6.1 The Plant Process Computer (PPC) supplies information equivalent to control board indications. The PPC also supplies operating curves equivalent to the curves supplied in the EOPs. When the PPC is available, this information should be used to verify plant parameters are within limits.

1.6.2 Systems should not be placed in manual unless mis−operation in automatic is apparent or a change in a process variable (e.g., plant cooldown) is desired. Systems placed in manual must be checked frequently to ensure proper operation.

1.6.3 Since an event may cause irregularities in a particular instrument reading, all available indications should be used to aid in evaluating plant conditions. Instrument readings must be corroborated when one or more confirmatory indications are available.

1.6.4 Hot leg and cold leg temperatures may be influenced by safety injection flow. Multiple indications and CET temperatures should be used to determine RCS temperature.

1.6.5 RBCCW flow should also be checked when checking the status of operating CAR fans.

1.7 **Communications**

1.7.1 During the performance of either the Diagnostic Flowchart or the Resource Assessment Trees, the US declares statements of fact, based on previously obtained plant conditions that used 3−way communications. Therefore, the crew will use 2−way communications during the performance of either the Diagnostic Flowchart or the Resource Assessment Trees. For these communications, the US shall state the condition or parameter as they understand it, and the COs either agree or disagree and provide the correct status.

1.7.2 During performance of all EOPs, the US shall read aloud all applicable Cautions and Notes in their entirety the first time they are encountered. When encountered again, the US may read or paraphrase the applicable Caution or Note. The COs will paraphrase the Caution or Note and must not respond: understand the Caution or Note," as the paraphrase. The US will complete the 3−way communication.

1.7.3 During EOP 2525, after the PPO or SPO have been queried, Safety Functions which are no longer being met, should be immediately communicated to the US upon discovery. This is a cue for the US to return to the "applicable" step in the SPTAs and query all appropriate Contingency Actions.

For example, in the event the crew has progressed through SPTAs beyond the step that checks RCS pressure and subsequently pressure lowers to the manual actuation trigger, the PPO is expected to interrupt the US to announce SIAS is being actuated.

1.7.4 Some plant parameters and status (e.g., RCS subcooling, containment pressure, SIAS/CIAS/EBFAS) are common to multiple steps within the EOP. It is acceptable for the US to use previously obtained data, however the parameter should be voiced to the crew. This gives the crew an opportunity to update the US on any changes to the parameter when plant conditions are changing.

1.7.5 The COs should not overload the US with information. The COs should report unexpected plant response and not necessarily the expected plant response.

1.7.6 The US should not ask leading questions. For example, asking Is pressurizer level 20% to 80%?" allows the CO to reply with a yes or no answer without providing a trend. The US should request parameters as "Value and Trend of" or "Status of" for equipment status.

1.7.7 The SM/US should make a plant page following all reactor trips or major changes in plant conditions which may have an impact on personnel safety.

1.8 **Manually Initiating and Blocking ESAS**

1.8.1 If plant parameters indicate that an ESAS actuation is required and did not actuate, then the operator shall manually actuate both channels of the ESAS signal.

1.8.2 If plant parameter trends indicate that an ESAS actuation is imminent, then the operator is empowered to manually actuate that signal prior to reaching the automatic actuation setpoint. (one exception to this is SRAS)

1.8.3 The US shall be informed immediately of any ESAS actuations required.

1.8.4 SIAS and MSI automatic initiation may only be Blocked" when the operators have control of the plant and are intentionally causing parameters to approach ESAS setpoints. [CR M2−97−0370]

1.9 **Procedure Usage**

1.9.1 <u>Step Sequencing</u>

a. A procedure step need not be fully completed before proceeding to the next instruction; (unless a Hold Point is specified). It is sufficient to begin a step and have assurance that it is progressing satisfactorily. This ensures efficient implementation where steps are very time consuming. Steps which follow a Hold Point may not be performed until the actions or conditions specified in the Hold Point step have been completed. [EOP 2530 contains a Hold Point]

b. Procedural steps listed in alphanumeric order are sequential steps and shall be addressed in that sequence. Exceptions to this are as follows.

- ❑ Asterisked steps, within the ORP or selected FRPs being implemented, may be brought forward to correct or preserve a Safety Function.

- ❑ Steps may be performed out of order after they have been accomplished once, if they are Continuously Applicable step, as indicated by an asterisk.

c. Steps with recurrent actions (i.e., the step will be performed repeatedly during the procedure) should be checked off in the placekeeper when started. Since these steps will be performed repeatedly, the placekeeper is marked with a "cont," in the "Done" column. This signifies that the step is continuously performed and will not be completed during the performance of the EOP.

d. Bulleted lists are provided within a step when any one of several alternative actions are equally acceptable to perform. The preferred method is listed as the first alternative.

e. It is acceptable for the SM or US to direct the performance of a task out of sequence, if the actions do not interfere with maintaining an existing Safety Function (e.g., transferring power supplies for "B" charging pump, preparing for power restoration).

1.9.2 Instructions and Contingency Actions

a. The EOPs are formatted with Instructions and Contingency Actions. The instructions column presents the optimal method and sequence for accomplishing a specific task. The contingencies column contains actions to be performed if the optimum method cannot be accomplished.

b. If the expected response is obtained (left column), the operator proceeds to the next step or sub step in the Instructions column (left column).

c. If the expected response is not obtained, the operator should proceed to the Contingency Action (right column). After the Contingency Action is addressed, the operator proceeds to the next step or sub step in the left column.

- ❑ Not all Instructions have an associated Contingency Action.
- ❑ If the step contains steps or instructions that are not appropriate at the present time, the operator should proceed to the next step or sub step in the left column.

d. Conditional steps as indicated by an IF or WHEN may be accomplished early when the following criteria is met:

- ❑ It is apparent that the condition will be met.
- ❑ Performing the step early will improve the plants margin of safety.

1.9.3 Referencing and Branching

a. The EOPs are designed to minimize the interface with other procedures. When Standard Appendices are needed, the required procedure will be referenced in the body of the EOP.

b. Other procedures (Normal OPs, Alarm Response, AOPs) are usually not normally needed to supplement the EOPs, but may be used as directed by the US. The EOP is always the controlling procedure when used in conjunction with any other procedure.

c. Referencing is used to allow another procedure or steps of a procedure to be used as a supplement to the procedure in use. The words “Refer To” direct the user to use another procedure concurrently with the original procedure.

d. The term “Refer To” means that supplemental action is required to complete the step. The operator should obtain a copy of the reference document and perform the required actions in parallel with the EOP in use. If the item that is being referred to is “Skill of the Trade,” the operator may perform the task from memory, but is required to obtain a copy of the procedure to ensure the steps taken were appropriate as time permits.

e. Branching is used to direct the user to exit the procedure in use and not return unless otherwise directed. The words "Go To" are used to accomplish branching.

f. If it becomes necessary to transition to the FRPs from any ORP and steps have been directed and are in progress, it is acceptable to allow completion of those step(s) using the guidance of the ORP during the transition until the RATs are completed (e.g.; If actions to isolate an affected SG are in progress, these actions should continue using ORP guidance). This is particularly important when steps have been initiated to preserve a Safety Function.

NOTE

A "major change" is defined as a change in plant conditions that has, or may have, a serious or significant impact on Safety Functions or the event(s) in progress OR may impact or impede a previously determined mitigation strategy. Examples include a subsequent loss of an electrical bus or sudden unexpected degradation of plant conditions.

1.9.4 Change in Plant Conditions

a. If, during the performance of the SPTA, a major change in plant conditions occurs the US should return to the beginning of the SPTA and commence the procedure again.

b. If, during the performance of the SPTA, a pump is lost (e.g., RCP, SW, RBCCW or AFW pumps), OR any "expected" ESAS criteria are met, it is acceptable to return only to the applicable step to ensure the associated Contingency Actions are taken.

c. If, during the performance of an ORP a major change in plant conditions occurs the US should return to the beginning of the procedure in use and commence the procedure again at the Confirm Diagnosis section, which, if appropriate will lead to review of Appendix 1, "Diagnostic Flowchart." However, if a Safety Function is in jeopardy OR it is obvious to the crew that multiple events are in progress, the US may transition directly to the FRP without using Appendix 1, "Diagnostic Flowchart."

d. If, during the performance of a FRP, a major change in plant status occurs, the US should reevaluate the success paths in use using the Resource Assessment Trees and the Safety Function Tracking Page. The STA should independently validate the US assessment of the success paths.

1.9.5 Placekeeping

a. Placekeeping shall be used in the EOPs and the Standard Appendices to assist the operator in keeping up with steps that have been successfully completed.

b. The ORPs and FRPs contain placekeeper pages that aid in providing a summary of all high level steps in the procedure. Placekeeper pages are located at the end of each ORP and after the applicable sections in the FRPs and must not be used to direct operator actions.

1.9.6 Step Verification

a. If the operator performs a procedure step with the procedure "in hand," it is not necessary for the US to perform a second check to ensure the step was completed properly. However, there are certain important actions within the EOPs that should always be step verified by the US with the CO or peer checked. Some examples include SI termination criteria and SG isolation during SGTR.

1.10 **Dynamic Evolutions Concurrent with Entry to EOP**

1.10.1 When a reactor trip occurs, any dynamic evolutions in progress should be secured and the plant should be placed in a safe, stable condition as soon as practical. Whether this is done immediately or delayed until after the performance of the EOP 2525 immediate actions, will depend on the nature of the evolution in progress.

a. Recovering from a relatively complex evolution may be time consuming, excessively delaying the performance of immediate actions. These recovery actions should be performed at a later time. Conversely, a simple evolution such as a routine dilution can be secured in a few seconds and should be done immediately.

b. Some systems or plant alignments will have little impact on plant response following a reactor trip. Restoration from evolutions on these systems can be delayed until after the performance of the immediate actions.

c. Performance of post trip actions, as directed by ARPs and AOPs, should be relatively simple and should be done immediately. (i.e., high level in feedwater heaters 5 or 6, plant trip due to pump vibrations which require pump to be stopped)

1.11 **Emergency Action Level (EAL) Classifications in EOPs**

1.11.1 The SM should begin classification of an event promptly upon recognition of event criteria being met to ensure the 15−minute requirement for event classification time is met.

1.11.2 During SPTAs, should it become apparent that an EAL condition is met, the classification should begin right away without waiting for the next EOP to be implemented.

1.11.3 The SM's evaluation may require attention be diverted from overseeing Control Room actions. This is necessary and expected, even though the plant may be in a transient.

1.11.4 The STA (or extra SRO) should provide an independent verification of the EAL classification. The classification of events should not be delayed while obtaining this independent assessment.

1.11.5 Upon making the EAL classification, the SM should promptly notify the Control Room watchstanders they are the Control Room DSEO, what the event classification is and the basis, and what escalation criteria may exist should conditions continue to degrade.

2. REFERENCES

2.1 CEN−152, Rev. 5.0, "Combustion Engineering Owners Group Emergency Procedure Guidelines." [Supplemental Information (as specified on applicable Attachments), from CEN−152, is required to be available to the procedure user as part of the implementation process.]

2.2 Safety Function Requirements Manual, Section 2.8, Credited Operator Actions (Rev 6, SFRM Change 4, February 2007) 1

2.3 MP−26−OPS−GDL200, "Conduct of Operations."

2.4 OP 2259U, "Unit 2 EOP Upgrade Writer's Guide."

3. COMMITMENTS

3.1 CR M2−97−0370

4. SUMMARY OF CHANGES

4.1 Removed section for Manual Reactor Trip Criteria since it does not meet the objective of this procedure. Relocated to OP 2255.

4.2 Revised procedure to provide additional implementation guidance and Operations Management expectations to ensure consistency. Due to the extent of the changes, revision bars were not used.

Summary of Changes rev 009−01

4.3 Removed reference to Containment Combustible Gas Control. Safety function was removed as a separate entity from the EOPs.

4.4 Changed Critical Tasks/Operator Credited Actions regarding isolation of AFW following an ESDE per REFERENCE 2.2 and the initiation of a plant cooldown following a LOCA per EOP 2532 controlled cooldown step.

4.5 Revised the guidance for controlling least affected SG ADV flow using CETs vs affected SG cold leg temperature.

4.6 Revised SDM guidance to maintain subcriticality for SBO as well as in the FRPs.

Summary of Changes rev 009−02

4.7 Added Operator Credited Action to Attachment 6 for placing CR in filtered recirc within 4 hours.

4.8 Added brief explaination of the 10 minute action in SPTAs to get one train of CRAC operating.

Summary of Changes rev 009−03

4.9 Deleted PORVs from Attachment 1 step 3.c regarding use of AVMs in assessing valve status. (AVMS for PORVS removed in 2R17)

4.10 Changed Attachment 7 General Expectations 1, to clarify no charging pumps available. This agrees with guidance in EOP 2537.

4.11 Changed Attachment 7 General Expectations 3, to recommend setting the ADV(s) to automatic at approximately 500 vs 550 psi (End of training cycle recommendation.)

4.12 Changed time to run Ctmt Spray from 2 to 4 hours. (Change due to AST)

4.13 Changed guidance throughout Attachment 9, to conform to new RATS.

4.14 Changed Attachment 1 guidance times to place CRACS in service to 25 minutes for CR ventillation issues. Also, changed time to 50 minutes to be in recirculation mode following SIAS, and 4 hours for a MSLB outside containment.

Overview/Strategy

This procedure contains a check of Safety Functions against acceptance criteria to give the operator a complete status regarding plant conditions and safety. The acceptance criteria are chosen to be accessible from the Control Room and to require no interpretation or interpolation by the operator. The steps that monitor and maintain Safety Functions are called Immediate Actions. These steps are continuously applicable while in SPTA. This procedure also contains Contingency Actions that can be performed to restore those Safety Functions in jeopardy.

The check of Safety Functions provides the operator with objective decision criteria to determine if action is required in the short term to restore plant safety. This permits crisp, reliable decision−making and precludes unnecessary operator action.

The check of Safety Functions discriminates between an uncomplicated reactor trip and more complex events. The Safety Function acceptance criteria are chosen to be consistent with the plant conditions that prevail only in the short term after an uncomplicated reactor trip. Thus, if equipment failures require attention, the acceptance criteria may not be satisfied. The US should determine if the equipment failure is the reason the Safety Function is not met or an actual event is in progress.

Critical Tasks/Operator Credited Actions

1. The operator is required to trip all RCPs within 5 minutes of the loss of NPSH, following a Small Break LOCA (SBLOCA).

2. The operator is required to isolate AFW to the affected SG within 30 minutes following the generation of MSIS during an ESDE. For scenarios where isolation is not possible from the Control Room, allowance must be made for local operation of FW−43A(B) or FW−44. It has been validated that it will take approximately 15 minutes to close FW−43A(B) or FW−44 locally. Therefore, isolation of AFW to an affected steam generator, from the control room, must be attempted within 15 minutes of a MSIS. (1)

3. If SG level is lowering and both MDAFW pumps are not operating, the operator is required to start the TDAFP within 10 minutes following a Loss of Normal Feedwater.

4. Control Room Air Conditioning System (CRACS) must be initiated (normal or recirculation mode) within 25 minutes of a loss of control room cooling to ensure control room temperature limits are not exceeded. CRAC must be initiated in it's recirculation mode within 50 minutes of receipt of a SIAS signal (due to LOCA, SGTR, or MSLB), and within 4 hours of a MSLB outside of CTMT (if a SIAS has *not* occurred). (3) (2)

General Expectations

1. Following an unplanned manual or automatic reactor trip, SPTAs will be performed.

2. The US shall perform all portions of the SPTAs in the order written and go over each step and applicable contingencies with the Control Room staff.

3. The COs shall perform all applicable steps in the SPTAs for their watchstation in order (steps are sequenced by Safety Function hierarchy).

4. COs shall be capable of performing all SPTA Immediate Actions from memory, but may use the Immediate Action operator memory aid or procedure if in doubt. This ensures that steps are performed in order and correctly.

5. Reports of unexpected plant responses should be made when queried unless the crew has already progressed beyond the appropriate step. In the later case, judgement should be used for appropriate timing consistent with Safety Function hierarchy.

6. When queried, the COs should report parameters (value and trend) and applicable Contingency Actions taken.

7. As SPTAs are performed, the US shall use all available information (i.e., results of Immediate Actions, equipment failures, manual operator actions, trends of parameters, etc.), to obtain an overall perspective of plant conditions for a diagnosis.

8. Following completion of SPTAs and the Diagnostic Flowchart (if appropriate), the US should state the diagnosis to other members of the Control Room staff to allow opportunity for correction or disagreement.

9. The US should complete the SPTAs prior to taking other actions. The US may direct actions outside of the SPTAs be initiated as necessary, to maintain Safety Functions, provided these actions do not result in a major change in plant conditions. (e.g., equipment failures not included in the SPTAs). However, these actions or directions shall not delay progression through the SPTAs, the Diagnostic Flowchart, or transition into the appropriate ORP or FRPs. For example, if a spare operator is available and it is desired to energize a vital bus via Unit 3 or the RSST, actions may be initiated while the crew is in SPTAs but the actual bus must not be energized until SPTAs are exited.

10. The STA and SM should be careful not to disrupt the close teamwork of the US and the COs during SPTAs.

11. To minimize the possibility of damaging RCPs, the operator is expected to trip all operating RCPs when pressurizer pressure is less than that required for NPSH.

12. The following additional guidance shall be employed for manual ESAS actuations during the performance of SPTAs:

    - ❑ It is expected that the CO shall manually actuate the appropriate ESAS prior to reaching the automatic setpoint <u>only</u> when sufficient time allows for unrushed overt self−checking.
    - ❑ The CO shall manually actuate the appropriate ESAS only when they have progressed through their Immediate Actions to the step in SPTAs requiring the actuation. Manual actuation does not relieve the CO of the requirement to perform SPTAs in the order specified.
    - ❑ The CO shall immediately announce to the entire crew the manual actuation. In the event the manual actuation is performed subsequent to the original query, the CO shall immediately inform the crew and the US shall ensure the applicable Contingency Actions are queried.

Implementation Guidance

1. Verification of Reactivity Control and Maintenance of Vital Auxiliaries

   a. The PPO and SPO shall perform the Reactivity Control Safety Function and determine the status of the main turbine promptly, from memory, and without direction from the US. It is not necessary for the COs to communicate this information to the US until prompted by the US. This ensures the US is ready to receive the information.

   b. The US should obtain a copy of EOP 2525 and ask the Primary CO the status of Reactivity Control. The CO will report the status of Reactivity Control to the US on the sub−step level. The CO will also report any Contingency Actions that were taken.

      ❑ If a SBO has occurred, the operator should assume that all CEAs have fully inserted, if reactor power is dropping and SUR is negative.

      ❑ If the operator determines that more than one CEA is not fully inserted into the core, the operator is expected to immediately commence Emergency Boration.

      ❑ The CO is expected to perform the Emergency Boration using the Standard Appendix, not from memory (using the Standard Appendix ensures the US does not need to step verify the alignment).

      ❑ The US must not query the Primary CO on other Safety Functions until Emergency Boration is initiated per the Standard Appendix.

   c. The US will then ask the Secondary CO the status of the main turbine. The CO will report the status of main turbine to the US on the sub−step level and any Contingency Actions that were taken.

      ❑ If the turbine did not trip, the CO must ensure the reactor is tripped prior to manually tripping the main turbine.

d. Following the initial response to the event, the US should ask the Secondary CO the status of Facility 1 and 2 electrical buses. The CO should provide the status of all electrical buses listed on the sub−step level. If only the buses, which are energized or deenergized, are provided, the US should prompt the CO to ensure the status of all electrical buses is known.
Normal response would be, "Both 6.9kV buses are energized, all four 4.16kV buses are energized, bus 201A and bus 201B energized, and VA10 & 20 are energized."
The US replies, "All electrical buses are energized."

- ❑ RPS cabinets and safety channels may be used to verify which vital AC instrument channels are energized.

- ❑ The CO should attempt to start the EDG for a deenergized safety bus and close the output breaker after checking for a fault on the bus and Containment pressure. The CO must <u>not</u> attempt to close the EDG output breaker if a fault exists on the safety bus.

- ❑ The presence of any of the following annunciators on C−08 may indicate a fault on 4.16 kV bus 24C:

  - ❑ DIESEL GEN 12U BKR TRIP (A−30)

  - ❑ DIESEL GEN 12U BKR CLOSING CKT BLOCKED (C−36)

  - ❑ 4KV BUS 24A/C TIE BKR A304 TRIP (A−10)

  - ❑ 4KV BUS 24C/E TIE BKR A305 TRIP (B−10)

- ❑ The presence of any of the following annunciators on C−08 may indicate a fault on 4.16 kV bus 24D:

  - ❑ DIESEL GEN 13U BKR TRIP (A−31)

  - ❑ DIESEL GEN 13U BKR CLOSING CKT BLOCKED (D−36)

  - ❑ 4KV BUS 24B/D TIE BKR A410 TRIP (C−10)

  - ❑ 4KV BUS 24D/E TIE BKR A408 TRIP (D−10)

2. Verification of RCS Inventory Control

   a. RCS subcooling is checked using the following criteria:

      ❑ For forced circulation with vessel level above the top of the hot leg (43%), use T_H subcooling

      ❑ For natural circulation, use CET subcooling

   b. If pressurizer level lowers to less than 35%, the US or CO may isolate letdown to minimize the inventory loss from the RCS.

3. Verification of RCS Pressure Control

   a. The Primary CO checks pressurizer pressure safety channel indicators. The CO should be aware of the status of pressurizer heaters and spray. Heaters may have de−energized due to low level heater cutout or bus loss and will require restoration (including operation of the heater control selector switch).

   b. No specific RCPs are designated to be tripped. The trip strategy thought process should include any plant condition specific response, such as:

      ❑ RCPs operating with alarms/abnormal conditions. If an RCP experienced and abnormal operating condition prior to the trip, or if the RCP experienced a loss of RBCCW, it is desirable to trip this RCP along with an additional opposite loop RCP.

      ❑ The need for maximum RCP spray flow may be considered, "B" and "D" running is expected to provide for maximum spray flow.

      ❑ The need to minimize the potential for spray flow. In a case such as a stuck open spray valve, it may be desirable to trip RCPs associated with the applicable spray valve.

c. When assessing pressurizer safeties, quench tank parameters, annunciators and AVMS should be used. It is acceptable to attempt to reset AVMS to determine valve status. 3

d. Check SIAS initiated by ensuring both facilities SIAS annunciators (C−01) are in alarm. Other expectations for this step include:\

❑ Verifying at least one facility of HPSI operating (amps, normal discharge pressure, injection valves open) and all available charging pumps running.

❑ Verifying one complete facility of Control Room Air Conditioning operating in the recirculation mode (supply, exhaust, and filter fans running and dampers properly aligned) [required within 50 minutes post−accident (i.e., SIAS actuation due to LOCA, SGTR, or MSLB)]. 3

e. For Pressurized Thermal Shock (PTS) concerns (i.e., maximum subcooling), T_C subcooling should be used.

4. Verification of Core Heat Removal

a. With forced circulation and vessel level above the top of the hot leg (43%), T_H subcooling should be used; otherwise, CET subcooling is used.

5. Verification of RCS Heat Removal

a. If SG pressure is less than the normal control band, the operator should also check that the MSSVs are closed, using C−05 annunciators (DA−17, DB−17; STM GEN No. 1/2 Safety Relief Valve Open). In the event of a loss of non−vital instrument AC (VR−11/21), the operator should direct a PEO to observe the outlets of the MSSVs above the Enclosure Building East and West sides for evidence of steam.

b. Due to current MSSV blowdown setpoints (~880 psia), it is possible for MSSV(s) to be open post−trip when the steam dumps are not available AND have SG pressure within the normal control band. To assess if a MSSV is actually stuck open, it is recommended the CO adjust ADV automatic setpoint(s) to the lower end of the control band. Additionally, temperature outside the normal band should also be used to assess a stuck open MSSV.

c. If T_C is less than 530°F, the operator should determine if feedwater flow is excessive to one or both SGs and adjust or isolate feedwater flow as required. The operator should determine if the cause of the excessive flow is due to control system malfunction (e.g., FRV not closing on the trip or FRV bypass valves not at the required position following the trip), or due to feedwater flow to a SG blowing down from an ESDE.

❑ In the case of malfunctioning equipment, the operator should attempt to adjust feedwater flow manually, since a component failure should not result in the loss of a SG for heat removal.

❑ The operator is required to isolate AFW to the affected SG within 30 minutes following the generation of MSIS during an ESDE. For scenarios where isolation is not possible from the Control Room, allowance must be made for local operation of FW−43A(B) or FW−44. It has been validated that it will take approximately 15 minutes to close FW−43A(B) or FW−44 locally. Therefore, isolation of AFW to an affected steam generator, from the control room, must be attempted within 15 minutes of a MSIS. (1)

d. If T_C is less than 530°F AND the ESDE has been terminated, the operator is required to operate the ADV or steam dumps to stabilize T_C. Temperature should not be allowed to restore to the normal band following an ESDE.

e. If SG level is lowering and both MDAFW pumps are not operating, the operator is required to start the TDAFP within 10 minutes following a Loss of Normal Feedwater.

f. If a SGTR has occurred, the operator is expected to throttle feed to the most affected SG as necessary to maintain level low in the band (40 to 45%). This will aid in maintaining SG pressure during the cooldown and aid in scrubbing radioactive iodine. The top of the SG tube bundle is ~33%. If break flow is restoring level to this band then feed flow is not necessary [this may not be assessed until verification of Containment Isolation].

g. If subcooling is less than 30°F, the operator is required to establish feedwater flow as follows to maintain SG heat removal:

❑ If no ESDE or SGTR exists, establish greater than 300 gpm to both SGs.

❑ If an ESDE or SGTR does exist, establish greater than 300 gpm to the unaffected SG.

6. Verification of Containment Isolation

a. The PPC should be used to obtain status of radiation monitors. If the PPC is not available, RC−14 should be used. A loss of power is not an unexplained alarm or unexplained rise.

b. "Unexplained" rise in activity is in reference to pre−trip or pre−event conditions.

c. The radiation monitors should be queried by asking the status of radiation monitors. The COs response should state Radiation Monitors − Inside Containment, Outside Containment, and Steam Plant Radiation Monitors.

❑ If Steam Plant Radiation Monitors indicate an unexplained alarm or unexplained rise, the operator is expected to throttle feed to the most affected SG as necessary to maintain level low in the band (40 to 45%).

7. Subsequent Actions

   a. Subsequent Actions should only be performed after all Immediate Actions steps and Contingencies are complete or in progress for the appropriate control board position.

   b. The main condenser is considered not available if any of the following conditions exist:

      ❑ There are no circulating water pumps operating

      ❑ There are no condensate pumps operating

      ❑ MSIVs are closed due to an MSI actuation for an ESDE or LOCA

      ❑ Backpressure is 15 Hg and degrading

   c. If an ESDE progresses to SG dry out conditions, when CET temperatures begin to rise, the operator is required to stabilize CET temperatures using the least affected SG ADV. CET temperatures must be closely monitored and actions taken to minimize any large temperature change (CET temperature may be affected by the establishment of natural circulation and feedwater flow rate). A general rule of thumb that can be used is to adjust the ADV automatic setpoint for the least affected SG to the saturation pressure for the CET's (this can be obtained using the Steam Tables or the value displayed on SPDS). 1

   d. The US will query the Primary and Secondary COs on the completion of their Subsequent Actions and need not query individual Subsequent Action steps, unless an action is in doubt. The COs should report the status of their Subsequent Actions to the US, Subsequent Action Contingency Actions taken, and Subsequent Actions not able to be completed. Normal response would be, "I have completed and verified my subsequent actions."

Supplemental Information

None

Attachment 2
EOP 2528, "Loss of Offsite Power/Loss of Forced Circulation," Implementation Guide

(Sheet 1 of 2)

Overview/Strategy

1. No Safety Functions are directly challenged by a loss of offsite power. Safety Functions must be maintained to allow natural circulation (NC) flow. Failure to maintain Safety Functions could result in a loss of NC flow and core cooling.

2. Operator actions are directed to achieve three objectives:

   - ❑ Establishing, maintaining, and verifying NC flow
   - ❑ Restoration of non−vital buses
   - ❑ If necessary, performing a cooldown to SDC entry conditions

3. <u>LOOP/LOFC Strategy</u>

   - ❑ Maintain RCS parameters
   - ❑ Restore electrical buses
   - ❑ Evaluate need for cooldown
     - ❑ Cooldown not desired − Maintain current RCS conditions
     - ❑ Cooldown desired − Initiate RCS cooldown

Critical Tasks/Operator Credited Actions

None

General Expectations

LOOP/LOFC should only be entered when it is the <u>only</u> event in progress.

Implementation Guidance

1. Maintain Pressurizer Level in Band

   Once a pressurizer cooldown has begun, pressurizer level indication de−calibration will occur. The appropriate plant curves or any of the following PPC points should be used to determine the true pressurizer level ("CVL103," "CVL110X," "CVL110Y," or "PZRLVL").

2. Check Single Phase Natural Circulation

   It takes 5 to 15 minutes for Natural Circulation to develop after RCPs have stopped.

3. Check Shutdown Margin and Maintain Shutdown Margin During the Cooldown

   a. If Emergency Boration is in progress, or one CEA did not fully insert, it is necessary for the operator to calculate shutdown margin (SDM) and determine required shutdown boron concentration met prior to exiting the procedure. This calculation should be performed as soon as plant conditions permit.

   b. SDM is required to be maintained during the use of the EOPs with the following exceptions:

      - ❑ During the FRPs or Station Blackout, the reactor is only required to be maintained shutdown. 1
      - ❑ If unable to obtain an RCS boron sample, or time does not permit performing a SDM calculation, then Emergency Boration may be terminated if all of the following conditions are met:
        - ❑ Pressurizer level is approaching the upper end of the control band
        - ❑ HPSI throttle criteria is met
        - ❑ Reactor power is stable or dropping

Supplemental Information

Before starting a RCP the operator should ensure that the pressurizer is at saturation conditions to support restart of the RCP. If a RCP is started with the pressurizer not at saturation conditions because of refill, RCS pressure may rapidly drop below minimum pressure to operate the pumps as a result of head bubble collapse and pressurizer out−surge.

Attachment 3
EOP 2530, "Station Blackout," Implementation Guide

(Sheet 1 of 3)

Overview/Strategy

1. A Station Blackout (SBO) event is an interruption of electrical power to the plant's electrical distribution system that results in a reactor trip and a concurrent loss of all station AC power (off−site and on−site).

2. All Safety Functions are challenged by a SBO. The ability to maintain vital auxiliaries (power to AC equipment) is most affected. Establishing RCS heat removal capability is a priority as reactivity control, inventory control, and pressure control SFSCs all require AC power or control of RCS heat removal such that other Safety Functions can still be maintained. Failure to maintain natural circulation (NC) flow could impact the other Safety Functions. Natural Circulation and heat transfer from primary to secondary via the SGs is the preferred method of RCS and core heat removal for this event since RCPs are unavailable to provide forced circulation and the SDC is unavailable to provide RCS heat removal.

3. Operator actions are initially directed at achieving two objectives:

   - ❑ Establishing, as a minimum, a source of vital 4160V power and vital equipment needed for plant stabilization.
   - ❑ Establishing, maintaining, and verifying NC flow (for as long as possible) while efforts focus on restoring a vital 4160V bus.

4. <u>SBO Assumptions</u>

   - ❑ Unit 2 is an 8 hour coping plant for a SBO (core damage is not likely for at least 8 hours).
   - ❑ Maximum RCS leakage present at the onset of a SBO is 112 gpm.

5. <u>SBO Strategy</u>

   - ❑ Maintain primary and secondary inventory
   - ❑ Control RCS heat removal
   - ❑ Strip electrical buses
   - ❑ Restore electrical buses
   - ❑ Restore vital equipment
   - ❑ Check natural circulation

Critical Tasks/Operator Credited Actions

1. Within one hour following a SBO event, Unit 2 will be able to restore one vital AC bus from an alternate AC power source (Unit 3 Bus 34A/34B), and operate a charging pump to prevent uncovering the core.

2. Prior to emptying either SG, operator actions are required to establish AFW flow to SGs.

General Expectations

During the first 30 minutes of the SBO, various components in the DC switchgear rooms, including the PPC, must be secured to limit the heat loading in the rooms and to protect equipment from high temperature damage. Alternate ventilation will need to be provided to various locations and components.

Implementation Guidance

1. Check Single Phase Natural Circulation

   It takes 5 to 15 minutes for Natural Circulation to develop after RCPs have stopped.

2. Perform Plant Cooldown to Maintain Subcooling

   a. If power is not restored or if on Unit 3 power, and subcooling is < 60°F, a controlled cooldown to maintain 30 − 60°F subcooling is performed after verifying subcriticality ($K_{eff} \leq .99$) will be met at 50°F increments lowering (e.g., check SDM met at 532°F, 482°F, 432°F, etc.). 1

   b. As a result of the maximum assumed RCS leakage, subcooling will lower as pressurizer level and pressure lower. In order to maintain subcooling, an RCS cooldown must be initiated. By controlling the degree of subcooling during an SBO, the core is kept cooled while the problem of inventory control can be addressed by restoring power. As the RCS is cooled, positive reactivity is added, with no method of adding Boric Acid. The cooldown will be limited by the maintenance of subcriticality. 1

3. Check Shutdown Margin and Maintain Shutdown Margin During the Cooldown

   a. If Emergency Boration is in progress, or one CEA did not fully insert, it is necessary for the operator to calculate shutdown margin (SDM) and determine required shutdown boron concentration met prior to exiting the procedure. This calculation should be performed as soon as plant conditions permit.

   b. SDM is required to be maintained during the use of the EOPs with the following exceptions:

      ❑ During the FRPs or Station Blackout, the reactor is only required to be maintained shutdown. 1

      ❑ If unable to obtain an RCS boron sample, or time does not permit performing a SDM calculation, then Emergency Boration may be terminated if all of the following conditions are met:

         ❑ Pressurizer level is approaching the upper end of the control band

         ❑ HPSI throttle criteria is met

         ❑ Reactor power is stable or dropping

Supplemental Information

None

Overview/Strategy

1. The primary Safety Functions challenged by a LOCA include RCS inventory control, RCS pressure control, RCS and core heat removal. Reactivity control, Containment isolation, and Containment temperature and pressure control Safety Functions will also be affected, but to a lesser degree. The degree that the Safety Functions will be affected is dependent upon the severity and location of the LOCA.

NOTE

Major recovery actions d., e. and f. are applicable to situations when the leak cannot be isolated.

2. The major recovery actions for LOCAs are as follows:

   a. Maximize SI flow into the RCS and attempt to isolate the source of the leak (reduces the risk of core uncovery and facilitates recovery from the LOCA).

   b. Regain control of RCS pressure and inventory attempting to isolate the leak, and maintain sufficient RCS heat removal (minimizes core damage).

   c. Perform a controlled cooldown to SDC entry conditions (allows cooldown and depressurization). Applies to the situation when the leak has been isolated.

   d. Rapid plant cooldown using the SGs. (Particularly important for small breaks that require the SGs to remove the core decay heat. This also helps facilitate depressurization of the RCS thereby lowering the leak rate.)

   e. Commencement of post−LOCA Long−Term Cooling. (Safety injection flow is switched to simultaneous hot/cold leg injection from the normal cold leg injection. Boron precipitation control is initiated. Dependent on break size, ensuring SRAS has initiated with proper cooling.) 1

   f. Determination of whether SDC operation is appropriate (small breaks) or whether simultaneous hot/cold leg injection in a recirculation mode should be continued (large breaks).

3. LOCA Strategy

   - ❑ Ensure SIAS
   - ❑ Isolate leak
   - ❑ LOCA not isolated:
     - ❑ RCS cooldown using SGs
     - ❑ Hot and cold leg injection
     - ❑ Determine if SDC possible
   - ❑ LOCA isolated:
     - ❑ Regain control of RCS pressure and inventory
     - ❑ Maintain RCS heat removal using SGs
     - ❑ Cooldown to SDC entry conditions

Critical Tasks/Operator Credited Actions

1. The operator is required to trip all RCPs within 5 minutes of the loss of NPSH, following a Small Break LOCA (SBLOCA).

2. The operator is required to place the switches for SI/CS mini−flow valves, SI−659 and SI−660 in "OPER" prior to the RWST level reaching the SRAS setpoint.

3. The operator is required to initiate a plant cooldown following an unisolable LOCA within one hour at a rate of greater than 40°F/hr until the steam dump bypass valves or ADVs are full open. 1

4. The operator is required to initiate SFP cooling no sooner than 4 hours post−LOCA.

5. The operator is required to isolate RBCCW to the non−essential header following a SRAS.

6. Eight to ten hours post−LOCA where the RCS has not refilled, the operator is required to establish simultaneous hot and cold leg injection to prevent boron precipitation.

7. The operator is required to trip ESF room sump pump breakers within 24 hours following a LOCA to ensure no unmonitored radiological release path is established due to passive failure of an ECCS pump seal or valve packing.

8. If actuated, the operator is required to operate CS for 4 hours following a LOCA. 3

Implementation Guidance

1. Optimize Safety Injection

   The operator should verify the blue lights on C01X for "Chiller System A" and "Chiller System B" (SIAS Group). This verifies the correct SIAS actuation for the following C−80 components: Vital Chillers (X−169A/B), Vital Chilled Water Pumps (P−122A/B), DC Switchgear Room Fans (F−54A/B), and Chilled Water Valves CHW−3, 11, 12, 13, 14, and 33.

2. Check LOCA NOT Outside of Containment

   If the LOCA is outside the containment, the TSC should be contacted to develop a plan to conserve RWST level. This may include securing one train of SI, if both trains are operating or throttling HPSI/LPSI flow. If these actions are taken, the operators need to ensure that enough SI flow is maintained to ensure that CET temperature is maintained less than 650°F (Core Heat Removal Safety Function)

3. Maintain Pressurizer Level in Band

   Once a pressurizer cooldown has begun, pressurizer level indication de−calibration will occur. The appropriate plant curves or any of the following PPC points should be used to determine the true pressurizer level ("CVL103," "CVL110X," "CVL110Y," or "PZRLVL").

4. Check Single Phase Natural Circulation

   It takes 5 to 15 minutes for Natural Circulation to develop after RCPs have stopped.

5. Check Shutdown Margin and Maintain Shutdown Margin During the Cooldown

   a. If Emergency Boration is in progress, or one CEA did not fully insert, it is necessary for the operator to calculate shutdown margin (SDM) and determine required shutdown boron concentration met prior to exiting the procedure. This calculation should be performed as soon as plant conditions permit.

   b. SDM is required to be maintained during the use of the EOPs with the following exceptions:

      ❑ During the FRPs or Station Blackout, the reactor is only required to be maintained shutdown. 1

      ❑ If unable to obtain an RCS boron sample, or time does not permit performing a SDM calculation, then Emergency Boration may be terminated if all of the following conditions are met:

         ❑ Pressurizer level is approaching the upper end of the control band

         ❑ HPSI throttle criteria is met

         ❑ Reactor power is stable or dropping

Supplemental Information

1. Hot leg and cold leg RTD temperature indications may be influenced by charging pump or safety injection water temperature. Use multiple RTD indications and/or CET indications for temperature when injection is occurring.

2. During the process of establishing entry conditions (RCS pressure and temperature) for SDC operation, it may be necessary to eliminate or reduce the size of the steam void in the reactor head. Ensure sufficient condensate availability to continue SG heat removal until the RCS pressure and temperature are reduced sufficiently, and SDC operation is accomplished.

3. RCS activity may be higher than normal due to the event in progress. Restoring letdown could create unacceptable radiological consequences in adjacent areas outside containment that may complicate access to the affected areas. HP and Technical Support should be notified prior to establishing letdown or SDC flow.

Attachment 5
EOP 2534, "Steam Generator Tube Rupture," Implementation Guide

(Sheet 1 of 5)

Overview/Strategy

1. The primary Safety Functions challenged by a SGTR are RCS inventory control and Containment Isolation. Containment Isolation is re−established by the isolation of the affected SG and reducing RCS pressure below the SG relief valve setpoints.

2. During a NC cooldown with an isolated SG, an inverted ΔT (T_C greater than T_H) will be observed due to a small amount of reverse heat transfer in the isolated SG. This has no effect on the NC flow in the intact SG.

3. <u>SGTR Strategy</u>

   - ❑ Cooldown RCS to < 515°F T_H
   - ❑ Identify, isolate, and confirm most affected SG
   - ❑ Depressurize RCS within 50 psi of isolated SG while maintaining:
     - ❑ RCP NPSH limits
     - ❑ At least 30°F subcooling
   - ❑ Cooldown to SDC entry conditions

Critical Tasks/Operator Credited Actions

1. The most affected SG is required to be isolated within 60 minutes from event initiation. (The design basis assumes a SGTR occurs while operating at full power. Therefore, from time of the reactor trip).

2. The operator is assumed to lower RCS pressure to minimize the primary−secondary leak rate and prevent overfill of the affected SG.

3. The operator cools the RCS using the intact SG and places SDC in service approximately 16 hours following the SGTR.

General Expectations

1. When initiating a cooldown at the "maximum controllable rate," two general rules of thumb apply:

   ❑ If no RCPs are operating, start at approximately 50% open (in manual) on either the ADVs or "A" steam dump, then monitor and adjust as necessary.

   ❑ If RCPs are operating, the ADVs or "A" steam dump should be placed in manual and opened slowly to attempt to maintain NPSH. NPSH should be closely monitored during the cooldown.

2. When 515°F T_H is achieved and isolation of the most affected SG begins, it is desired to continue a slight plant cooldown within T/S limits using the least affected or intact SG.

3. To keep the loops coupled, RCS loop T_H temperatures should be maintained within 10°F of each other. If the ΔT between each loop T_H exceeds 10°F, it will be necessary to cool and depressurize the isolated SG.

4. To minimize the possibility of damaging RCPs, the operator is expected to trip all operating RCPs when pressurizer pressure is less than that required for NPSH.

Implementation Guidance

1. Optimize Safety Injection

   The operator should verify the blue lights on C01X for "Chiller System A" and "Chiller System B" (SIAS Group). This verifies the correct SIAS actuation for the following C−80 components: Vital Chillers (X−169A/B), Vital Chilled Water Pumps (P−122A/B), DC Switchgear Room Fans (F−54A/B), and Chilled Water Valves CHW−3, 11, 12, 13, 14, and 33.

2. Isolate Most Affected Steam Generator

   a. When RCS T_H is less than 515°F in both loops, the cooldown should not be stopped. The operator should slow the cooldown by throttling the steam dumps or the ADVs. The most affected SG should then be isolated. A new cooldown rate should then be determined, using both of the following:

      ❑ Existing T_C

      ❑ T_C in the operating loop when T_H was less than 515°F.

   b. The cooldown should be maintained within the limits of T/S after the most affected SG has been isolated.

3. Maintain Isolated Steam Generator Pressure Less Than 920 psia

   The SM should be informed when using the atmospheric dump valves (ADVs). A potential exists for radiological release.

4. Check Single Phase Natural Circulation

   It takes 5 to 15 minutes for Natural Circulation to develop after RCPs have stopped.

5. Check Shutdown Margin and Maintain Shutdown Margin During the Cooldown

   a. If Emergency Boration is in progress, or one CEA did not fully insert, it is necessary for the operator to calculate shutdown margin (SDM) and determine required shutdown boron concentration met prior to exiting the procedure. This calculation should be performed as soon as plant conditions permit.

   b. SDM is required to be maintained during the use of the EOPs with the following exceptions:

      ❑ During the FRPs or Station Blackout, the reactor is only required to be maintained shutdown. 1

- ❑ If unable to obtain an RCS boron sample, or time does not permit performing a SDM calculation, then Emergency Boration may be terminated if all of the following conditions are met:
  - ❑ Pressurizer level is approaching the upper end of the control band
  - ❑ HPSI throttle criteria is met
  - ❑ Reactor power is stable or dropping

6. Perform Controlled Cooldown

   If the RCS is being cooled by natural circulation during a SGTR, the cold leg temperature may be higher than the hot leg temperature in the isolated SG. CET temperature should be used during natural circulation cooldown.

7. Disable RCP Restart

   During a natural circulation cooldown, a slug of water with reduced boron concentration may collect in the affected loop due to SG backflow. If, under these circumstances, an affected loop RCP is started, then a positive reactivity addition may occur. Procedural steps provide guidance to start an RCP in the unaffected loop first.

8. Maintain Isolated Steam Generator Level Less Than 90%

   Maintaining SG level by backflow does not require SDM calculations due to the small amount of level change expected.

9. Maintain Pressurizer Level in Band

   Once a pressurizer cooldown has begun, pressurizer level indication de−calibration will occur. The appropriate plant curves or any of the following PPC points should be used to determine the true pressurizer level ("CVL103," "CVL110X," "CVL110Y," or "PZRLVL").

10. Cool and Depressurize Isolated SG (with Main Condenser Available)

    The isolated SG may be steamed in short durations to prevent depressurizing the SG too rapidly. This will allow the operator to maintain RCS pressure approximately equal (± 50 psi) to the isolated SG and prevent diluting the RCS. SG level is an integral part of SG pressure control, level below the top of the SG tubes (33%) will aid in depressurization. A control band of 20 to 90% is available.

Supplemental Information

1. When indicated SG water level is excessively high (100% or greater) the possibility of valve damage and uncontrolled radioactive releases from direct water relief through the ADVs should be considered before steaming the affected SG.

2. SG backflow is permissible for the purpose of promoting cooling of the ruptured SG secondary side liquid inventory and decreasing SG pressure to a value which allows the RCS to reach SDC entry conditions. For all such operations, RCP operation is required. It should be noted that the back flow evolution, in itself, is not the major contributor to the SG depressurization. Back flow allows SG level to drop, which causes the steam bubble to expand and lower SG pressure to some extent. However, the major portion of the SG depressurization comes from removing heat from the steam volume via cold feedwater addition or exposure to colder SG tubes when the tubes are uncovered (33%). The following information must be considered before attempting SG back flow as an isolated SG depressurization method:

   ❑ At least one RCP must be operating before attempting SG feed and bleed, allowing backflow from the SG to the RCS. This is necessary to ensure mixing of the dilute SG water with the borated RCS water. It is important to track the dilution effect of SG backflow on RCS boron concentration. Therefore, SG level must be monitored closely so that any change in the SG level can be attributed to backflow. This requires feed to be secured to the SG during the backflow evolution.

3. RCS activity may be higher than normal due to the event in progress. Restoring letdown could create unacceptable radiological consequences in adjacent areas outside containment that may complicate access to the affected areas. HP and Technical Support should be notified prior to establishing letdown or SDC flow.

Attachment 6
EOP 2536, "Excess Steam Demand Event," Implementation Guide

(Sheet 1 of 3)

Overview/Strategy

1. The primary Safety Functions challenged by an ESDE are Reactivity control, RCS heat removal, and Containment temperature and pressure (for events inside Containment). The degree that the Safety Functions will be affected is dependent upon the severity and location of the ESDE.

2. Operator actions are directed at achieving five objectives:

   - ❑ Stop the uncontrolled cooldown of the RCS
   - ❑ Stabilize RCS pressure and temperature
   - ❑ Evaluate the necessity of a plant cooldown (Consider condensate inventory, extent of damage and time required for repair)
   - ❑ Maintain plant in a stable condition until a cooldown is required or can be performed
   - ❑ Perform a cooldown to SDC entry conditions via forced or natural circulation (Use unaffected SG if break is upstream of MSIVs or both SGs if break is downstream)

3. <u>ESDE Strategy</u>

   - ❑ Close MSIVs to isolate leak
   - ❑ Isolate most affected SG
   - ❑ Stabilize RCS temperature and pressure
   - ❑ Evaluate need for cooldown
     - ❑ Cooldown not desired − Maintain current RCS conditions
     - ❑ Cooldown desired − Initiate RCS cooldown

Critical Tasks/Operator Credited Actions

1. The operator is required to isolate AFW to the affected SG within 30 minutes following the generation of MSIS during an ESDE. For scenarios where isolation is not possible from the Control Room, allowance must be made for local operation of FW−43A(B) or FW−44. It has been validated that it will take approximately 15 minutes to close FW−43A(B) or FW−44 locally. Therefore, isolation of AFW to an affected steam generator, from the control room, must be attempted within 15 minutes of a MSIS. (1)

2. In the event that the control room AC system is not automatically isolated on high radiation or SIAS/CIAS/EBFAS, manual isolation and alignment of the CRAC system may be necessary. If directed by the TSC, the operator is required to manually place the control room in filtered recirculation mode within 4 hours following the initiation of a main steam line break accident. (2)

General Expectations

1. If the ESDE progresses to SG dry out conditions, when CET temperatures begin to rise, the operator is required to stabilize CET temperatures using the least affected SG ADV. CET temperatures must be closely monitored and actions taken to minimize any large temperature change (CET temperature may be affected by the establishment of natural circulation and feedwater flow rate). A general rule of thumb that can be used is to adjust the ADV automatic setpoint for the least affected SG to the saturation pressure for the CET's (this can be obtained using the Steam Tables or the value displayed on SPDS). (1)

2. To minimize the possibility of damaging RCPs, the operator is expected to trip all operating RCPs when pressurizer pressure is less than that required for NPSH.

3. For Pressurized Thermal Shock (PTS) concerns (i.e., maximum subcooling), T_C subcooling should be used.

Implementation Guidance

1. <u>Optimize Safety Injection</u>

   The operator should verify the blue lights on C01X for "Chiller System A" and "Chiller System B" (SIAS Group). This verifies the correct SIAS actuation for the following C−80 components: Vital Chillers (X−169A/B), Vital Chilled Water Pumps (P−122A/B), DC Switchgear Room Fans (F−54A/B), and Chilled Water Valves CHW−3, 11, 12, 13, 14, and 33.

2. <u>Maintain Pressurizer Level in Band</u>

   Once a pressurizer cooldown has begun, pressurizer level indication de−calibration will occur. The appropriate plant curves or any of the following PPC points should be used to determine the true pressurizer level ("CVL103," "CVL110X," "CVL110Y," or "PZRLVL").

3. <u>Check Single Phase Natural Circulation</u>

   It takes 5 to 15 minutes for Natural Circulation to develop after RCPs have stopped.

4. Check Shutdown Margin and Maintain Shutdown Margin During the Cooldown

   a. If Emergency Boration is in progress, or one CEA did not fully insert, it is necessary for the operator to calculate shutdown margin (SDM) and determine required shutdown boron concentration met prior to exiting the procedure. This calculation should be performed as soon as plant conditions permit.

   b. SDM is required to be maintained during the use of the EOPs with the following exceptions:

      ❑ During the FRPs or Station Blackout, the reactor is only required to be maintained shutdown. 1

      ❑ If unable to obtain an RCS boron sample, or time does not permit performing a SDM calculation, then Emergency Boration may be terminated if all of the following conditions are met:

         ❑ Pressurizer level is approaching the upper end of the control band

         ❑ HPSI throttle criteria is met

         ❑ Reactor power is stable or dropping

Supplemental Information

None

Attachment 7
EOP 2537, "Loss of All Feedwater," Implementation Guide

(Sheet 1 of 3)

Overview/Strategy

1. The primary Safety Functions challenged by a LOAF are RCS heat removal and RCS inventory control. Operator actions should be directed towards conserving the available SG water inventory and re−establishing feedwater flow to the SGs so that RCS heat removal capability is maintained or restored. When water level falls below the top of the SG tube bundle, heat transfer in the SG lowers and RCS temperature rises, which may affect other Safety Functions. If the SGs boil dry, RCS temperature will rise rapidly. When saturation conditions in the RCS reach the setpoints for the pressurizer safeties, RCS inventory will be lost out of the safeties (loss of RCS Inventory Control). If RCS inventory loss continues at a high pressure, core uncovery may occur with corresponding severe consequences.

2. The actions to initiate once−through cooling (OTC) are designed to accomplish the following main objectives:

   - ❑ Depressurize the RCS
   - ❑ Ensure a borated water supply to the RCS
   - ❑ Ensure an adequate vent path from the RCS

3. <u>LOAF Strategy</u>

   - ❑ Check once−through cooling (OTC) criteria
   - ❑ Trip RCPs
   - ❑ Conserve SG inventory
   - ❑ Restore feedwater
   - ❑ Evaluate need for cooldown
     - ❑ Cooldown not desired − Maintain current RCS conditions
     - ❑ Cooldown desired − Initiate RCS cooldown

Critical Tasks/Operator Credited Actions

Once−through cooling (OTC) is established if SG level is not restoring and <u>any</u> of the following conditions exist:

❑ At least one SG level is less than or equal to 70 inches

❑ RCS T_C is rising uncontrollably by 5°F or more

General Expectations

1. If it is determined that SG feedwater flow (main feedwater, including condensate or AFW) will not be restored prior to any SG wide range level falling to 70 inches <u>OR</u> if both facilities of HPSI, PORVs, and ADVs are not available <u>OR</u> no charging pumps are available, the Contingency Action to initiate OTC should be started early enough during the approach to 70 inches to ensure full implementation prior to depleting SG inventory. A general rule of thumb is to initiate actions at 100 inches lowering. However, this value will be dependent upon the rate of SG inventory loss. 3

2. Since a LOAF challenges RCS heat removal, to minimize additional heat input, it is important to secure all RCPs in a timely manner upon entry to the EOP.

3. When depressurizing SG(s) at the "maximum controllable rate" to establish condensate flow, the ADV(s) automatic setpoint(s) should be lowered to approximately 500 psi. This should allow adequate condensate flow to recover SG levels while minimizing the likelihood of overfeeding the SGs. If the condenser is available, manual control of the steam dumps is required and SG pressure(s) should be closely monitored. Actions to block MSI will also be required. 3

4. The operator should strive to conserve SG inventory by steaming only as necessary to control RCS temperature.

Implementation Guidance

1. <u>Maintain Pressurizer Level in Band</u>

   Once a pressurizer cooldown has begun, pressurizer level indication de−calibration will occur. The appropriate plant curves or any of the following PPC points should be used to determine the true pressurizer level ("CVL103," "CVL110X," "CVL110Y," or "PZRLVL").

2. Check Single Phase Natural Circulation

   It takes 5 to 15 minutes for Natural Circulation to develop after RCPs have stopped.

3. Check Shutdown Margin and Maintain Shutdown Margin During the Cooldown

   a. If Emergency Boration is in progress, or one CEA did not fully insert, it is necessary for the operator to calculate shutdown margin (SDM) and determine required shutdown boron concentration met prior to exiting the procedure. This calculation should be performed as soon as plant conditions permit.

   b. SDM is required to be maintained during the use of the EOPs with the following exceptions:

      ❑ During the FRPs or Station Blackout, the reactor is only required to be maintained shutdown. 1

      ❑ If unable to obtain an RCS boron sample, or time does not permit performing a SDM calculation, then Emergency Boration may be terminated if all of the following conditions are met:

         ❑ Pressurizer level is approaching the upper end of the control band

         ❑ HPSI throttle criteria is met

         ❑ Reactor power is stable or dropping

Supplemental Information

The operator should not add feedwater to a dry SG if another SG still contains water. Feedwater should only be re−established to the SG that is not dry. If both SGs become dry, refill only one SG to re−initiate core cooling.

Overview/Strategy

FRPs provide guidance for undiagnosed events, multiple events or when actions taken in other EOPs are not satisfying their respective SFSC. Using a Safety Function hierarchy, the FRPs are written to verify the satisfactory control or restoration of all Safety Functions during any casualty. The FRP makes it possible for the user to establish and maintain a safe plant configuration without the need to diagnose the specific event (or events) in progress.

Attachment 9 of this procedure provides additional guidance on Safety Function hierarchy and RATS implementation.

Critical Tasks/Operator Credited Actions

For LOCA:

1. The operator is required to trip all RCPs within 5 minutes of the loss of NPSH, following a Small Break LOCA (SBLOCA).

2. The operator is required to place the switches for SI/CS mini−flow valves, SI−659 and SI−660 in "OPER" prior to the RWST level reaching the SRAS setpoint.

3. The operator is required to initiate a plant cooldown following an unisolable LOCA within one hour at a rate of greater than 40°F/hr until the steam dump bypass valves or ADVs are full open. (1)

4. The operator is required to initiate SFP cooling no sooner than 4 hours post−LOCA.

5. The operator is required to isolate RBCCW to the non−essential header following a SRAS.

6. Eight to ten hours post−LOCA where the RCS has not refilled, the operator is required to establish simultaneous hot and cold leg injection to prevent boron precipitation.

7. The operator is required to trip ESF room sump pump breakers within 24 hours following a LOCA to ensure no unmonitored radiological release path is established due to passive failure of an ECCS pump seal or valve packing.

8. If actuated, the operator is required to operate CS for 4 hours following a LOCA. (3)

For SGTR:

1. The most affected SG is required to be isolated within 60 minutes from event initiation. (The design basis assumes a SGTR occurs while operating at full power. Therefore, from time of the reactor trip).

2. The operator is assumed to lower RCS pressure to minimize the primary−secondary leak rate and prevent overfill of the affected SG.

3. The operator cools the RCS using the intact SG and places SDC in service approximately 16 hours following the SGTR.

For ESDE:

1. The operator is required to isolate AFW to the affected SG within 30 minutes following the generation of MSIS during an ESDE. For scenarios where isolation is not possible from the Control Room, allowance must be made for local operation of FW−43A(B) or FW−44. It has been validated that it will take approximately 15 minutes to close FW−43A(B) or FW−44 locally. Therefore, isolation of AFW to an affected steam generator, from the control room, must be attempted within 15 minutes of a MSIS. (1)

For LOAF:

1. Once−through cooling (OTC) is established if SG level is not restoring and any of the following conditions exist:

   ❑ At least one SG level is less than or equal to 70 inches

   ❑ RCS T_C is rising uncontrollably by 5°F or more

General Expectations

1. If, during a LOAF, it is determined that SG feedwater flow (main feedwater, including condensate or AFW) will not be restored prior to any SG wide range level falling to 70 inches OR if both facilities of HPSI, PORVs, and ADVs are not available OR at least one charging pump is not available, the Contingency Action to initiate OTC should be started early enough during the approach to 70 inches to ensure full implementation prior to depleting SG inventory. A general rule of thumb is to initiate actions at 100 inches lowering. However, this value will be dependent upon the rate of SG inventory loss.

2. During a LOAF, RCS heat removal is challenged. Therefore, to minimize additional heat input, it is important to secure all RCPs in a timely manner upon entry to the appropriate FRP for Heat Removal (this will require pulling affected step(s) forward).

3. In a LOAF event, the operator should strive to conserve SG inventory by steaming only as necessary to control RCS temperature.

4. When depressurizing SG(s) at the "maximum controllable rate" to establish condensate flow during a LOAF, the ADV(s) automatic setpoint(s) should be lowered to approximately 550 psi. This should allow adequate condensate flow to recover SG levels while minimizing the likelihood of overfeeding the SGs. If the condenser is available, manual control of the steam dumps is required and SG pressure(s) should be closely monitored. Actions to block MSI will also be required.

5. When initiating a cooldown at the "maximum controllable rate" during a SGTR, two general rules of thumb apply:

   ❑ If no RCPs are operating, start at approximately 50% open (in manual) on either the ADVs or "A" steam dump, then monitor and adjust as necessary.

   ❑ If RCPs are operating, the ADVs or "A" steam dump should be placed in manual and opened slowly to attempt to maintain NPSH. NPSH should be closely monitored during the cooldown.

6. When 515°F T_H is achieved and isolation of the most affected SG begins for a SGTR, it is desired to continue a slight plant cooldown within T/S limits using the least affected or intact SG.

7. To keep the loops coupled following SG isolation during a SGTR, RCS loop T_H temperatures should be maintained within 10°F of each other. If the ΔT between each loop T_H exceeds 10°F, it will be necessary to cool and depressurize the isolated SG.

8. If an ESDE progresses to SG dry out conditions, when CET temperatures begin to rise, the operator is required to stabilize CET temperatures using the least affected SG ADV. CET temperatures must be closely monitored and actions taken to minimize any large temperature change (CET temperature may be affected by the establishment of natural circulation and feedwater flow rate). A general rule of thumb that can be used is to adjust the ADV automatic setpoint for the least affected SG to the saturation pressure for the CETs (this can be obtained using the Steam Tables or the value displayed on SPDS). 1

9. To minimize the possibility of damaging RCPs, the operator is expected to trip all operating RCPs when pressurizer pressure is less than that required for NPSH.

10. During ESDEs, for Pressurized Thermal Shock (PTS) concerns (i.e., maximum subcooling), T_C subcooling should be used.

11. During the first 30 minutes of a SBO, various components in the DC switchgear rooms, including the PPC, must be secured to limit the heat loading in the rooms and to protect equipment from high temperature damage. Alternate ventilation will need to be provided to various locations and components.

Implementation Guidance

1. Optimize Safety Injection

   The operator should verify the blue lights on C01X for "Chiller System A" and "Chiller System B" (SIAS Group). This verifies the correct SIAS actuation for the following C−80 components: Vital Chillers (X−169A/B), Vital Chilled Water Pumps (P−122A/B), DC Switchgear Room Fans (F−54A/B), and Chilled Water Valves CHW−3, 11, 12, 13, 14, and 33.

2. Check Single Phase Natural Circulation

   It takes 5 to 15 minutes for Natural Circulation to develop after RCPs have stopped.

3. Maintain Pressurizer Level in Band

   Once a pressurizer cooldown has begun, pressurizer level indication de−calibration will occur. The appropriate plant curves or any of the following PPC points should be used to determine the true pressurizer level ("CVL103," "CVL110X," "CVL110Y," or "PZRLVL").

4. Isolate Most Affected Steam Generator [SGTR]

   When RCS T_H is less than 515°F in both loops, the cooldown should not be stopped. The operator should slow the cooldown by throttling the steam dumps or the ADVs. The most affected SG should then be isolated. A new cooldown rate should then be determined, using both of the following:

   ❑ Existing T_C

   ❑ T_C in the operating loop when T_H was less than 515°F.

   The cooldown should be maintained within the limits of T/S after the most affected SG has been isolated.

5. Maintain Isolated Steam Generator Pressure Less Than 920 psia [SGTR]

   The SM should be informed when using the atmospheric dump valves (ADVs). A potential exists for radiological release.

6. Maintain Isolated Steam Generator Level Less Than 90% [SGTR]

   Maintaining SG level by backflow does not require SDM calculations due to the small amount of level change expected.

7. Perform Controlled Cooldown [SGTR]

   If the RCS is being cooled by natural circulation during a SGTR, the cold leg temperature may be higher than the hot leg temperature in the isolated SG. CET temperature should be used during natural circulation cooldown.

8. Disable RCP Restart [SGTR]

   During a natural circulation cooldown, a slug of water with reduced boron concentration may collect in the affected loop due to SG backflow. If, under these circumstances, an affected loop RCP is started, then a positive reactivity addition may occur. Procedural steps provide guidance to start an RCP in the unaffected loop first.

9. Cool and Depressurize Isolated SG (with Main Condenser Available) [SGTR]

   The isolated SG may be steamed in short durations to prevent depressurizing the SG too rapidly. This will allow the operator to maintain RCS pressure approximately equal (± 50 psi) to the isolated SG and prevent diluting the RCS. SG level is an integral part of SG pressure control, level below the top of the SG tubes (33%) will aid in depressurization. A control band of 20 to 90% is available.

10. Check Shutdown Margin and Maintain Shutdown Margin During the Cooldown

    a. If Emergency Boration is in progress, or one CEA did not fully insert, it is necessary for the operator to calculate shutdown margin (SDM) and determine required shutdown boron concentration met prior to exiting the procedure. This calculation should be performed as soon as plant conditions permit.

b. SDM is required to be maintained during the use of the EOPs with the following exceptions:

- ❑ During the FRPs and Station Blackout, the reactor is only required to be maintained shutdown. 1

- ❑ If unable to obtain an RCS boron sample, or time does not permit performing a SDM calculation, then Emergency Boration may be terminated if all of the following conditions are met:

  - ❑ Pressurizer level is approaching the upper end of the control band

  - ❑ HPSI throttle criteria is met

  - ❑ Reactor power is stable or dropping

Supplemental Information

1. RCS activity may be higher than normal due to the event in progress. Restoring letdown could create unacceptable radiological consequences in adjacent areas outside containment that may complicate access to the affected areas. HP and Technical Support should be notified prior to establishing letdown or SDC flow.

2. If there is a conflict between isolating a SG (e.g., due to indications of SGTR or ESDE) and maintaining adequate heat removal via at least one SG, then maintain RCS heat removal via the <u>least affected</u> SG has precedence. At least one SG should always be available for heat removal, if at all possible. [Isolation of both SGs and going to OTC is a last resort option.]

Attachment 9
Resource Assessment Trees (RATs) Implementation Guidance
(Sheet 1 of 4)

Overview/Strategy

Safety Function Hierarchy in FRPs (Highest to Lowest)		
Safety Function	**Available Success Paths**	**EOP**
Reactivity Control	RC−1, RC−2, RC−3	EOP 2540A
Maintenance of Vital DC Power	MVA−DC−1	EOP 2540B
Maintenance of Vital AC Power	MVA−AC−1, MVA−AC−2, MVA−AC−3	EOP 2540B
RCS Inventory Control	IC−1, IC−2	EOP 2540C1
RCS Pressure Control	PC−1, PC−2, PC−3	EOP 2540C2
RCS and Core Heat Removal	HR−1, HR−2, HR−3	EOP 2540D
Containment Isolation	CI−1	EOP 2540E
Containment Temperature and Pressure Control	CTPC−1, CTPC−2, CTPC−3	EOP 2540F

The RATs are structured to show the intended priority (top to bottom) for implementation of various success paths. At the side of each success path are the acceptance criteria for fulfilling each Safety Function. A success path is a sequential series of actions required to accomplish a Safety Function. Multiple success paths are available to satisfy most Safety Functions. 3

The US will review the acceptance criteria for the success path and make a decision on the most likely successful success path (that is, the success path that is either meeting the acceptance criteria or, if none are met, will meet the acceptance criteria).

The preferred path is usually the lowest numbered path for a specific Safety Function, (i.e., RC−1, PC−1, or HR−1); however, higher numbered paths may need to be used due to plant conditions (e.g., if HR−1 and HR−2 cannot be met, HR−3 should be used).

General Expectations

NOTE

1. Equipment may be available but not operating. Therefore, when progressing through the various success paths to the acceptance criteria, the US is checking if equipment is available.
2. For CTPC, the success path determination should be based on Containment pressure and not the operating mode (normal or emergency) of the CAR fans. However, a higher numbered success path may need to be used if the acceptance criteria cannot be met. Additionally, if Containment pressure is rising towards the automatic ESAS setpoint AND manual ESAS actuation has been initiated, the higher numbered success path should be considered.
3. If one vital bus is powered from the RSST and the other is powered from the associated emergency diesel, provided the acceptance criteria is met, MVA−AC−1 should be chosen.

1. The US reviews the status of all Safety Functions in order of hierarchy, using the RATs and the Safety Function Tracking Page, by checking control board or SPDS indications against success path acceptance criteria.
2. The evaluation of higher priority Safety Functions must not be skipped even if it is known a lower order Safety Function is not met.
3. The US obtains input from the PPO/SPO while determining which success path to implement.
4. The US will implement success paths for all Safety Functions based on current plant conditions.

5. The US will prioritize the FRP implementation based on the success paths chosen and current status of the Safety Functions. The hierarchy of implementation is as follows:

   a. Safety Functions that do not meet the SFSC for the selected success path (prioritized in order of Safety Function hierarchy)

   b. Safety Functions for which success path 3 has been selected (based on Safety Function hierarchy)

   c. Safety Functions for which success path 2 has been selected (based on Safety Function hierarchy)

   d. Safety Functions for which success path 1 has been selected (based on Safety Function hierarchy)

   Examples: Success path 3 (RC−3, MVA−AC−3, PC−3, HR−3, CAR−3) should be prioritized higher than success path 2. RC−3 should be prioritized higher than HR−3. HR−3 should be prioritized higher than RC−2. CTPC−2 should be prioritized higher than RC−1.

6. After choosing the success paths for each Safety Function, the US briefs the crew on their direction and priorities.

7. When it is determined that a Safety Function is not met for a selected success path, the US shall immediately exit the RATs and address the affected Safety Function. When the associated success path has been referred to and actions initiated to attempt to satisfy the Safety Function, the US shall return to the RATs and continue to assess all Safety Functions.

8. The STA should independently perform a check of each Safety Function to determine the appropriate success path to enter and should confer with the US to validate the US assessment of the appropriate success path to enter. Upon exiting the RATs, the STA shall immediately initiate and monitor SFSC for the selected success paths. Additionally, if the RATs are exited due to a Safety Function not being met, the STA will also continue to assess all other Safety Functions.

9. More than one Safety Function may be pursued concurrently if plant conditions warrant. However, pursuit of a lower priority Safety Function must not hinder restoration efforts of the higher priority Safety Function.

10. If the SFSC is met for the selected success path, the US should always attempt to move to a higher success path. For example, IC−2 is the selected success path, but HPSI Throttle/Stop criteria is met. The direction for placing letdown in service is in IC−1, not in IC−2. The US should evaluate the SFSC for IC−1 to ensure that it is met (or can be met) and reassess Safety Function priorities.