RATE 2 **LOW USE RESIDENTIAL SERVICE**

AVAILABILITY

This rate is available to customers that meet the special conditions listed below, and are served by the Company's standard service which is specified as a single point of delivery per premises from an existing overhead distribution system to individually metered private residences and individually metered dwelling units in apartment structures or other multi-family residential structures. It is not available for resale service nor shall service be supplied to dwelling units having a total of more than ten rooms, five or more of which are rented or offered for rent to any person or persons not a member, or members, of the immediate family of the owner or lessor of the dwelling units.

A dwelling unit is defined as a room or group of rooms having, in addition to living quarters, kitchen facilities for the sole use of the family or individual occupying such dwelling unit.

SPECIAL CONDITIONS OF SERVICE

1) This rate schedule is available to those accounts where the consumption has not exceeded 400 Kwhrs. for each of the twelve billing months preceding the billing month service is to be initially billed under this rate schedule. The customer must have occupied the dwelling unit for the entire time necessary to determine eligibility under this rate schedule.

2) Consumption during a billing period of more than 30 days, used to determine eligibility under this rate schedule, shall be adjusted to a 30 day billing period by application of a fraction, the numerator of which shall be 30 and the denominator of which shall be the actual number of days in the billing period.

3) The second billing month within a twelve billing month period that consumption under this rate schedule exceeds 400 Kwhrs. will terminate eligibility under this rate schedule.

4) Service will be billed under the previous rate schedule the next twelve billing periods before the customer will again be eligible for the Low Use Rate.

CHARACTER OF SERVICE

Alternating Current, 60 hertz, single phase, 120 volts, 2 wire or 120/240 volts 3 wire.

RATE PER MONTH

Basic Facilities Charge:	$ 8.00	
Plus Energy Charge:		
All Kwhrs. @	$ 0.07242	per Kwhr.

MINIMUM CHARGE

The monthly minimum charge shall be the basic facilities charge as stated above.

ADJUSTMENT FOR FUEL AND VARIABLE ENVIRONMENTAL COSTS

Fuel costs of $.02742 per Kwhr. are included in the energy charge and are subject to adjustment by order of the Public Service Commission of South Carolina.

STORM DAMAGE COMPONENT

The energy charges above include a storm damage component of $.00043 per Kwhr. for accumulation of a storm damage reserve.

SALES AND FRANCHISE TAX

To the above will be added any applicable sales tax, franchise fee or business license tax which may be assessed by any state or local governmental body.

PAYMENT TERMS

All bills are net and payable when rendered.

SPECIAL PROVISIONS

The Company will furnish service in accordance with its standard specifications. Non-standard service will be furnished only when the customer pays the difference in costs between non-standard service and standard service or pays to the Company its normal monthly facility charge based on such difference in costs.

TERM OF CONTRACT

Contracts shall be written for a period of not less than one (1) year. A separate contract shall be written for each meter at each location.

GENERAL TERMS AND CONDITIONS

The Company's General Terms and Conditions are incorporated by reference and are a part of this rate schedule.

RATE 3 (M)

MUNICIPAL POWER SERVICE

AVAILABILITY

This rate is available to municipal customers using the Company's standard service which is specified as a single point of delivery per premises from an existing overhead distribution system. This includes all municipally owned and operated facilities for power purposes including, but not restricted to public buildings and pumping stations. It is not available for resale or standby service.

CHARACTER OF SERVICE

Alternating Current, 60 hertz. Voltage and phase at the option of the Company.

RATE PER MONTH

Basic Facilities Charge:	$	16.50	
Plus Energy Charge:			
Summer Billing Months (June-September) All Kwhrs. @	$	0.08423	per Kwhr.
Winter Billing Months (October-May) All Kwhrs. @.	$	0.08423	per Kwhr.

MINIMUM CHARGE

The monthly minimum charge shall be the basic facilities charge as stated above, provided however, when construction costs exceed four (4) times the estimated annual revenue excluding fuel revenue to be derived by the Company, the customer may make a contribution in aid of construction of the excess cost or pay the Company's standard facility rate on the excess construction cost in addition to the rate charges above.

ADJUSTMENT FOR FUEL AND VARIABLE ENVIRONMENTAL COSTS

Fuel costs of $.02728 per Kwhr. are included in the energy charge and are subject to adjustment by order of the Public Service Commission of South Carolina.

STORM DAMAGE COMPONENT

The energy charges above include a storm damage component of $.00038 per Kwhr. for accumulation of a storm damage reserve.

SALES AND FRANCHISE TAX

To the above will be added any applicable sales tax, franchise fee or business license tax which may be assessed by any state or local governmental body.

PAYMENT TERMS

All bills are net and payable when rendered.

SPECIAL PROVISIONS

Service shall not be supplied under this rate for establishments of a commercial nature, nor to operations primarily non-municipal. Under no conditions will the Company allow the service to be resold to or shared with others.

The Company will furnish service in accordance with its standard specifications. Non-standard service will be furnished only when the customer pays the difference in costs between non-standard service and standard service or pays to the Company its normal monthly facility charge based on such difference in costs.

TERM OF CONTRACT

Contracts shall be written for a period of not less than ten (10) years.Contracts shall be written for a period of not less than ten (10) years.

GENERAL TERMS AND CONDITIONS

The Company's General Terms and Conditions are incorporated by reference and are a part of this rate schedule.

RATE 5

RESIDENTIAL SERVICE
TIME OF USE

AVAILABILITY

This rate is available on a voluntary basis to customers using the Company's standard service which is specified as a single point of delivery per premises from an existing overhead distribution system to individually metered private residences and individually metered dwelling units in apartment structures or other multi-family residential structures. It is not available for resale service nor shall service be supplied to dwelling units having a total of more than ten rooms, five or more of which are rented or offered for rent to any person or persons not a member, or members, of the immediate family of the owner or lessor of the dwelling units.

A dwelling unit is defined as a room or group of rooms having, in addition to living quarters, kitchen facilities for the sole use of the family or individual occupying such dwelling unit.

CHARACTER OF SERVICE

Alternating Current, 60 hertz, single phase, 120 volts, 2 wire or 120/240 volts 3 wire.

RATE PER MONTH

I. Summer Months of June-September

A. Basic Facilities Charge:	$	12.00	
B. Energy Charge:			
All on-peak Kwhrs.@	$	0.22303	per Kwhr.
All off-peak Kwhrs.@	$	0.07439	per Kwhr.

C. Minimum Bill:
The monthly minimum charge shall be the basic facilities charge

II. Winter Months of October-May

A. Basic Facilities Charge:	$	12.00	
B. Energy Charge:			
All on-peak Kwhrs.@	$	0.20976	per Kwhr.
All off-peak Kwhrs.@	$	0.07439	per Kwhr.

C. Minimum Bill:
The monthly minimum charge shall be the basic facilities charge

DETERMINATION OF ON-PEAK HOURS

A. On-Peak Hours:

Summer Months of June-September:
The on-peak summer hours are defined as the hours between 2:00 p.m.-7:00 p.m., Monday-Friday, excluding holidays.*

Winter Months of October-May:
The on-peak winter hours are defined as the hours between 7:00 a.m.-12:00 noon, Monday-Friday, excluding holidays.*

B. Off-Peak Hours:

The off-peak hours in any month are defined as all hours not specified as on-peak hours.

*Holidays are: New Year's Day, Memorial Day, Independence Day, Labor Day, Thanksgiving Day and Christmas Day.

ADJUSTMENT FOR FUEL AND VARIABLE ENVIRONMENTAL COSTS

Fuel costs of $.02742 per Kwhr. are included in the energy charge and are subject to adjustment by order of the Public Service Commission of South Carolina.

STORM DAMAGE COMPONENT

The energy charges above include a storm damage component of $.00043 per Kwhr. for accumulation of a storm damage reserve.

SALES AND FRANCHISE TAX

To the above will be added any applicable sales tax, franchise fee or business license tax which may be assessed by any state or local governmental body.

PAYMENT TERMS

All bills are net and payable when rendered.

SPECIAL PROVISIONS

The Company will furnish service in accordance with its standard specifications. Non-standard service will be furnished only when the customer pays the difference in costs between non-standard service and standard service or pays to the Company its normal monthly facility charge based on such difference in costs.

The Company shall have the right to install and operate special metering equipment to measure customer's loads or any part thereof and to obtain any other data necessary to determine the customer's load characteristics.

The Company's levelized payment plans are not available to customers served under this rate schedule.

TERM OF CONTRACT

Contracts shall be written for a period of not less than one (1) year. A separate contract shall be written for each meter at each location.

GENERAL TERMS AND CONDITIONS

The Company's General Terms and Conditions are incorporated by reference and are a part of this rate schedule.

RATE 6 (RGCC)

RESIDENTIAL SERVICE
ENERGY SAVER/
CONSERVATION RATE

AVAILABILITY

This rate is available to customers using the Company's standard service which is specified as a single point of delivery per premises from an existing overhead distribution system to individually metered private residences and individually metered dwelling units in apartment structures or other multi-family residential structures. It is not available for resale service nor shall service be supplied to dwelling units having a total of more than ten rooms, five or more of which are rented or offered for rent to any person or persons not a member, or members, of the immediate family of the owner or lessor of the dwelling units.

A dwelling unit is defined as a room or group of rooms having, in addition to living quarters, kitchen facilities for the sole use of the family or individual occupying such dwelling unit.

The builder or homeowner must provide the following:

1) For new homes only - Proof that home meets the Council of American Building Officials Model Energy Code.
2) Receipts showing the purchase and installation of a new AC unit that meets the requirements as shown below.
3) A certificate issued by an installer showing a wall total cavity R value of 15 (R-15).
4) Certification from builder stating that requirements have been met.

The Company may perform an on-site audit to verify that customer meets availability requirements as stated herein.

THERMAL AND AIR CONDITIONING REQUIREMENTS FOR ENERGY CONSERVATION

The following requirements are predicated on the Council of American Building Officials Model Energy Code and subject to change with a change in the Council of American Building Officials Model Energy Code. Sufficient application of thermal control products and specified air conditioning requirements must be met to satisfy the minimum standards outlined below:

Ceilings: Ceilings of newly constructed homes shall be insulated with a total "as installed" thermal resistance (R) value of 30 (R-30).
Ceilings of manufactured housing shall be insulated with a thermal resistance (R) value of 30 (R-30).
Ceilings of existing housing shall be insulated with a total "as installed" thermal resistance (R) value of 38 (R-38).

Lighting: Recessed ceiling lights shall be sealed.

Walls: Walls exposed to the full temperature differential (TD), or unconditioned areas, shall have a total cavity R value of 15 (R-15).
*This is not a requirement for existing housing.

Floors: Floors over crawl space or crawl space walls shall have insulation installed having a total R value of 19 (R-19).
100% of the exposed earth in a crawl space shall be covered with a vapor barrier of no less than (4) mills.

Windows: Windows shall be insulated (double) glass or have storm windows.

Doors: Doors exposed to full TD areas must be weather-stripped on all sides and of solid construction.

Ducts: Air ducts located outside of conditioned space must have: 1) all joints properly fastened and sealed, and, 2) the duct shall have a minimum installed insulation R-value of 6.0. All joints in ductwork outside of the conditioned space must be permanently sealed with the application of duct sealant. Transverse joints, take-offs, transitions, supply/return connections to the air handler, boot connections to the floor/ceiling/wall, and framed-in and panned passages must be made airtight with duct sealant.

Attic Vent: Attic ventilation must be a minimum of one square foot of net free area for each 150 square feet attic floor area.

Water Heaters: Electric water heaters must have insulation surrounding the tank with minimum total R value of 8 (R-8).

Air Condition: All air conditioners must have a SEER rating of 1.5 SEER higher than the rating shown in the Council of American Building Officials Model Energy Code or 12 SEER or any federal or state mandated energy codes, whichever is higher.

Other: Chimney flues and fireplaces must have tight fitting dampers.

*Insulation thermal resistance values are shown for insulation only, framing corrections will not be considered.

The "as installed" thermal resistance (R) value for all loose fill or blowing type insulation materials must be verifiable either by installed density using multiple weighted samples, the manufacturer's certification methods, Federal Trade Commission's procedures or other methods specified by local governing agencies.

RATE 6 (RGCC)

RESIDENTIAL SERVICE
ENERGY SAVER/
CONSERVATION RATE

CHARACTER OF SERVICE

Alternating Current, 60 hertz, single phase, 120 volts, 2 wire or 120/240 volts 3 wire.

RATE PER MONTH

		Summer (Billing Month June-September)		Winter (Billing Month October-May)	
Basic Facilities Charge:		$ 8.00		$ 8.00	
Plus Energy Charge:					
First	800 Kwhrs. @	$ 0.09630	per Kwhr.	$ 0.09630	per Kwhr.
Excess over	800 Kwhrs. @	$ 0.10593	per Kwhr.	$ 0.09245	per Kwhr.

MINIMUM CHARGE

The monthly minimum charge shall be the basic facilities charge as stated above.

ADJUSTMENT FOR FUEL AND VARIABLE ENVIRONMENTAL COSTS

Fuel costs of $.02742 per Kwhr. are included in the energy charge and are subject to adjustment by order of the Public Service Commission of South Carolina.

STORM DAMAGE COMPONENT

The energy charges above include a storm damage component of $.00043 per Kwhr. for accumulation of a storm damage reserve.

SALES AND FRANCHISE TAX

To the above will be added any applicable sales tax, franchise fee or business license tax which may be assessed by any state or local governmental body.

PAYMENT TERMS

All bills are net and payable when rendered.

SPECIAL PROVISIONS

The Company will furnish service in accordance with its standard specifications. Non-standard service will be furnished only when the customer pays the difference in costs between non-standard service and standard service or pays to the Company its normal monthly facility charge based on such difference in costs.

TERM OF CONTRACT

Contracts shall be written for a period of not less than one (1) year. A separate contract shall be written for each meter at each location.

GENERAL TERMS AND CONDITIONS

The Company's General Terms and Conditions are incorporated by reference and are a part of this rate schedule.

RATE 7

RESIDENTIAL SERVICE
TIME-OF-USE DEMAND

AVAILABILITY

This rate is available on a voluntary basis to customers using the Company's standard service which is specified as a single point of delivery per premises from an existing overhead distribution system to individually metered private residences and individually metered dwelling units in apartments structures or other multi-family residential structures. It is not available for resale service nor shall service be supplied to dwelling units having a total or more than ten rooms, five or more of which are rented or offered for rent to any person or persons not a member, or members, of the immediate family of the owner or lessor of the dwelling units.

A dwelling unit is defined as a room or group of rooms having, in addition to living quarters, kitchen facilities for the sole use of the family or individual occupying such dwelling unit.

CHARACTER OF SERVICE

Alternating Current, 60 hertz, single phase, 120 volts, 2 wire or 120/240 volts 3 wire.

RATE PER MONTH

I. Basic Facilities Charge: $ 12.00

II. Demand Charge:

A. On-Peak Billing Demand

Summer Months of June-September @	$	10.25	per KW
Non-Summer Months of October-May @	$	6.44	per KW

III. Energy Charge:

All on-peak Kwhrs.@	$	0.06795	per Kwhr.
All off-peak Kwhrs.@	$	0.05227	per Kwhr.

MINIMUM CHARGE

The monthly minimum charge shall be the basic facilities charge as stated above.

BILLING DEMAND

The maximum integrated fifteen minute demand for the current month occurring during the on-peak hours specified below. The maximum integrated fifteen minute demand for any period may be recorded on a rolling time interval.

DETERMINATION OF ON-PEAK HOURS

A. On-Peak Hours:

Summer Months of June-September:

The on-peak summer hours are defined as the hours between 2:00 p.m.-7:00 p.m., Monday-Friday, excluding holidays.*

Non-Summer Months of October-May:

The on-peak winter hours are defined as the hours between 7:00 a.m.-12:00 noon, Monday-Friday, excluding holidays.*

B. Off-Peak Hours:

The off-peak hours in any month are defined as all hours not specified as on-peak hours.

*Holidays are: New Year's Day, Memorial Day, Independence Day, Labor Day, Thanksgiving Day and Christmas Day.

ADJUSTMENT FOR FUEL AND VARIABLE ENVIRONMENTAL COSTS

Fuel costs of $.02742 per Kwhr. are included in the energy charge and are subject to adjustment by order of the Public Service Commission of South Carolina.

STORM DAMAGE COMPONENT

The energy charges above include a storm damage component of $.00043 per Kwhr. for accumulation of a storm damage reserve.

SALES AND FRANCHISE TAX

To the above will be added any applicable sales tax, franchise fee or business license tax which may be assessed by any state or local governmental body.

PAYMENT TERMS

All bills are net and payable when rendered.

SPECIAL PROVISIONS

The Company will furnish service in accordance with its standard specifications. Non-standard service will be furnished only when the customer pays the difference in costs between non-standard service and standard service or pays to the Company its normal monthly facility charge based on such difference in costs.

The Company shall have the right to install and operate special metering equipment to measure customer's loads or any part thereof and to obtain any other data necessary to determine the customer's load characteristics.

The Company's levelized payment plans are not available to customers served under this rate schedule.

TERM OF CONTRACT

Contracts shall be written for a period of not less than one (1) year. A separate contract shall be written for each meter at each location.

GENERAL TERMS AND CONDITIONS

The Company's General Terms and Conditions are incorporated by reference and are a part of this rate schedule.

AVAILABILITY

This rate is available to customers using the Company's standard service which is specified as a single point of delivery per premises from an existing overhead distribution system to individually metered private residences and individually metered dwelling units in apartment structures or other multi-family residential structures. It is not available for resale service nor shall service be supplied to dwelling units having a total of more than ten rooms, five or more of which are rented or offered for rent to any person or persons not a member, or members, of the immediate family of the owner or lessor of the dwelling units.

A dwelling unit is defined as a room or group of rooms having, in addition to living quarters, kitchen facilities for the sole use of the family or individual occupying such dwelling unit.

CHARACTER OF SERVICE

Alternating Current, 60 hertz, single phase, 120 volts, 2 wire or 120/240 volts 3 wire.

RATE PER MONTH

		Summer (Billing Month June-September)		Winter (Billing Month October-May)	
Basic Facilities Charge:		$ 8.00		$ 8.00	
Plus Energy Charge:					
First	800 Kwhrs. @	$ 0.10008	per Kwhr.	$ 0.10008	per Kwhr.
Excess over	800 Kwhrs. @	$ 0.11009	per Kwhr.	$ 0.09608	per Kwhr.

MINIMUM CHARGE

The monthly minimum charge shall be the basic facilities charge as stated above.

ADJUSTMENT FOR FUEL AND VARIABLE ENVIRONMENTAL COSTS

Fuel costs of $.02742 per Kwhr. are included in the energy charge and are subject to adjustment by order of the Public Service Commission of South Carolina.

STORM DAMAGE COMPONENT

The energy charges above include a storm damage component of $.00043 per Kwhr. for accumulation of a storm damage reserve.

SALES AND FRANCHISE TAX

To the above will be added any applicable sales tax, franchise fee or business license tax which may be assessed by any state or local governmental body.

PAYMENT TERMS

All bills are net and payable when rendered.

SPECIAL PROVISIONS

The Company will furnish service in accordance with its standard specifications. Non-standard service will be furnished only when the customer pays the difference in costs between non-standard service or pays to the Company its normal monthly facility charge based on such difference in costs.

TERM OF CONTRACT

Contracts shall be written for a period of not less than one (1) year. A separate contract shall be written for each meter at each location.

GENERAL TERMS AND CONDITIONS

The Company's General Terms and Conditions are incorporated by reference and are a part of this rate schedule.

RATE 9 **GENERAL SERVICE**

AVAILABILITY

This rate is available to customers using the Company's standard service which is specified as a single point of delivery per premises from an existing overhead distribution system for general light and/or power purposes such as commercial, industrial, religious, charitable and eleemosynary institutions. It is not available for resale service.

CHARACTER OF SERVICE

Alternating Current, 60 hertz. Voltage and phase at the option of the Company.

RATE PER MONTH

	Summer (Billing Months June-September)	Winter (Billing Months October-May)
Basic Facilities Charge:	$ 16.50	$ 16.50
Demand Charge:		
First 250 KVA of Billing Demand	No Charge	No Charge
Excess over 250 KVA of Billing Demand @	$ 3.05 per KVA	No Charge

The Billing Demand (to the nearest whole KVA) shall be the maximum integrated fifteen (15) minute demand measured during the billing months of June through September.

Energy Charge:		
First 3,000 Kwhrs. @	$ 0.09956 per Kwhr.	$ 0.09956 per Kwhr.
Over 3,000 Kwhrs. @	$ 0.10593 per Kwhr.	$ 0.09249 per Kwhr.

MINIMUM CHARGE

The monthly minimum charge shall be the basic facilities charge and demand charge as stated above, provided however, when construction costs exceed four (4) times the estimated annual revenue excluding fuel revenue to be derived by the Company, the customer may make a contribution in aid of construction of the excess cost or pay the Company's standard facility rate on the excess construction cost in addition to the rate charges above.

ADJUSTMENT FOR FUEL AND VARIABLE ENVIRONMENTAL COSTS

Fuel costs of $.02728 per Kwhr. are included in the energy charge and are subject to adjustment by order of the Public Service Commission of South Carolina.

STORM DAMAGE COMPONENT

The energy charges above include a storm damage component of $.00038 per Kwhr. for accumulation of a storm damage reserve.

SALES AND FRANCHISE TAX

To the above will be added any applicable sales tax, franchise fee or business license tax which may be assessed by any state or local governmental body.

POWER FACTOR

If the power factor of the Customer's installation falls below 85%, the Company may adjust the billing to a basis of 85% power factor.

TEMPORARY SERVICE

Temporary service for construction and other purposes will be supplied under this rate in accordance with the Company's Terms and Conditions covering such service.

PAYMENT TERMS

All bills are net and payable when rendered.

SPECIAL PROVISIONS

This rate is available for residential service where more than one dwelling unit is supplied through a single meter, provided service to such dwelling unit was established prior to July 1, 1980.

The Company will furnish service in accordance with its standard specifications. Non-standard service will be furnished only when the customer pays the difference in costs between non-standard service and standard service or pays to the Company its normal monthly facility charge based on such difference in costs.

UNMETERED SERVICE PROVISION

When customer's usage can be determined and in the sole opinion of the Company, installation of metering equipment is impractical or uneconomical, monthly Kwhrs. may be estimated by the Company and billed at the above rate per month, except that the basic facilities charge shall be $5.25.

TERM OF CONTRACT

Contracts for installation of a permanent nature shall be written for a period of not less than one (1) year. A separate contract shall be written for each meter at each location.

GENERAL TERMS AND CONDITIONS

The Company's General Terms and Conditions are incorporated by reference and are a part of this rate schedule.

RATE 10 SMALL CONSTRUCTION SERVICE

AVAILABILITY

This rate is available as a temporary service for builders using the Company's standard service which is specified as a single point of delivery per premises from an existing overhead distribution system for general lighting and/or power purposes during construction. It is not available for resale or standby service.

CHARACTER OF SERVICE

Alternating Current, 60 hertz, single phase, two or three wire at Company's standard secondary service voltages of 240 volts or less.

RATE PER MONTH

Basic Facilities Charge:	$ 8.00	
Plus Energy Charge:		
All Kwhrs. @	$ 0.09988	per Kwhr.

MINIMUM CHARGE

The monthly minimum charge shall be the basic facilities charge as stated above.

ADJUSTMENT FOR FUEL AND VARIABLE ENVIRONMENTAL COSTS

Fuel costs of $.02728 per Kwhr. are included in the energy charge and are subject to adjustment by order of the Public Service Commission of South Carolina.

STORM DAMAGE COMPONENT

The energy charges above include a storm damage component of $.00038 per Kwhr. for accumulation of a storm damage reserve.

SALES AND FRANCHISE TAX

To the above will be added any applicable sales tax, franchise fee or business license tax which may be assessed by any state or local governmental body.

PAYMENT TERMS

All bills are net and payable when rendered.

SPECIAL PROVISIONS

If providing temporary service requires the Company to install transformers and other facilities which must be removed when temporary service is no longer required, then the customer may be required to pay the cost of installing and removing the Company's temporary facilities.

TERM OF CONTRACT

Contracts shall be written for a period of time commencing with establishment of service and ending when construction is suitable for occupancy or one year, which is less. A separate contract shall be written for each meter at each location.

GENERAL TERMS AND CONDITIONS

The Company's General Terms and Conditions are incorporated by reference and are a part of this rate schedule.

RATE 11 **IRRIGATION SERVICE**

AVAILABILITY

This rate is available to customers using the Company's standard service which is specified as a single point of delivery per premises from an existing overhead distribution system. It is not available for resale. This schedule is available for service furnished for the operation of electric motor driven pumps and equipment supplying water for the irrigation of farmlands and plant nurseries, and irrigation to provide adequate moisture for vegetative cover to control erosion and provide runoff. The pumping units served hereunder shall be used solely for the purpose of irrigation.

All motors of more than 5 H.P. shall be approved by the Company. The Company reserves the right to deny service to any motor which will be detrimental to the service of other customers. Upon request, customer may pay all cost associated with upgrading the system to the point at which starting the customer's motor will not degrade the service to the other customers.

CHARACTER OF SERVICE

Alternating Current, 60 hertz. Voltage and phase at the option of the Company.

RATE PER MONTH

I. Summer Months of June-September

A. Basic Facilities Charge:	$ 20.15	
B. Energy Charge:		
All on-peak Kwhrs.@	$ 0.18170	per Kwhr.
All shoulder Kwhrs.@	$ 0.10720	per Kwhr.
All off-peak Kwhrs.@	$ 0.05974	per Kwhr.

II. Winter Months of October-May

A. Basic Facilities Charge:	$ 20.15	
B. Energy Charge:		
All Kwhrs.@	$ 0.05974	per Kwhr.

MINIMUM CHARGE

The monthly minimum charge shall be the basic facilities charge as stated above, except when the revenue produced by the customer does not sufficiently support the investment required to serve the load. The Company will determine in each case the amount and form of payment required to correct the revenue deficiency.

DETERMINATION OF ON-PEAK SHOULDER, AND OFF-PEAK HOURS

A. On-Peak Hours:

Summer Months of June-September:

The on-peak summer hours are defined as the hours between 2:00 p.m.-6:00 p.m., Monday-Friday, excluding holidays.*

B. Shoulder Hours:

Summer Months of June-September:

The shoulder summer hours are defined as the hours between 10:00 a.m.-2:00 p.m. and 6:00 p.m.-10:00 p.m., Monday-Friday, excluding holidays.*

C. Off-Peak Hours:

The off-peak hours in any month are defined as all hours not specified as on-peak or shoulder hours.

*Holidays are Independence Day and Labor Day.

ADJUSTMENT FOR FUEL AND VARIABLE ENVIRONMENTAL COSTS

Fuel costs of $.02728 per Kwhr. are included in the energy charge and are subject to adjustment by order of the Public Service Commission of South Carolina.

STORM DAMAGE COMPONENT

The energy charges above include a storm damage component of $.00038 per Kwhr. for accumulation of a storm damage reserve.

SALES AND FRANCHISE TAX

To the above will be added any applicable sales tax, franchise fee or business license tax which may be assessed by any state or local governmental body.

PAYMENT TERMS

All bills are net and payable when rendered.

SPECIAL PROVISIONS

The Company will furnish service in accordance with its standard specifications. Non-standard service will be furnished only when the customer pays the difference in costs between non-standard service and standard service or pays to the Company its normal monthly facility charge based on such difference in costs.

The Company shall have the right to install and operate special metering equipment to measure customer's loads or any part thereof and obtain any other data necessary to determine the customer's load characteristics.

TERM OF CONTRACT

Contracts for installations shall be written for a period of not less than ten (10) years. A separate contract shall be written for each meter at each location.

GENERAL TERMS AND CONDITIONS

The Company's General Terms and Conditions are incorporated by reference and are a part of this rate schedule.

RATE 12 (C) CHURCH SERVICE

AVAILABILITY

This rate is available to customers using the Company's standard service which is specified as a single point of delivery per premises from an existing overhead distribution system for general light and/or power service to churches. It is not available for resale or standby service. It is only available to recognized churches.

CHARACTER OF SERVICE

Alternating Current, 60 hertz. Voltage and phase at the option of the Company.

RATE PER MONTH

Basic Facilities Charge:	$	10.80	
Plus Energy Charge:			
All Kwhrs. @	$	0.08447	per Kwhr.

MINIMUM CHARGE

The monthly minimum charge shall be the basic facilities charge as stated above, provided however, when construction costs exceed four (4) times the estimated annual revenue excluding fuel revenue to be derived by the Company, the customer may make a contribution in aid of construction of the excess cost or pay the Company's standard facility rate on the excess construction cost in addition to the rate charges above.

ADJUSTMENT FOR FUEL AND VARIABLE ENVIRONMENTAL COSTS

Fuel costs of $.02728 per Kwhr. are included in the energy charge and are subject to adjustment by order of the Public Service Commission of South Carolina.

STORM DAMAGE COMPONENT

The energy charges above include a storm damage component of $.00038 per Kwhr. for accumulation of a storm damage reserve.

SALES AND FRANCHISE TAX

To the above will be added any applicable sales tax, franchise fee or business license tax which may be assessed by any state or local governmental body.

PAYMENT TERMS

All bills are net and payable when rendered.

SPECIAL PROVISIONS

The Company will furnish service in accordance with its standard specifications. Under no conditions will the Company allow the service to be resold to or shared with others. Non-standard service will be furnished only when the customer pays the difference in costs between non-standard service and standard service or pays to the Company its normal monthly facility charge based on such difference in costs.

When a church offers activities that, in the sole opinion of the Company, are of a commercial nature such as day care, camps or recreational activities, the Company may require that the account be served under the appropriate general service rate.

TERM OF CONTRACT

Contracts shall be written for a period of not less than five (5) years. A separate contract shall be written for each meter at each location.

GENERAL TERMS AND CONDITIONS

The Company's General Terms and Conditions are incorporated by reference and are a part of this rate schedule.

RATE 13 (ML)

MUNICIPAL LIGHTING SERVICE

AVAILABILITY

This rate is available to municipal customers using the Company's standard service which is specified as a single point of delivery per premises from an existing overhead distribution system. This includes all municipally owned and operated facilities for lighting streets, highways, parks and other public areas, or other signal system service. It is not available for resale or standby service.

CHARACTER OF SERVICE

Alternating Current, 60 hertz. Voltage and phase at the option of the Company.

RATE PER MONTH

Basic Facilities Charge:	$	16.50	
Plus Energy Charge:			
All Kwhrs. @	$	0.07918	per Kwhr.

MINIMUM CHARGE

The monthly minimum charge shall be the basic facilities charge as stated above, provided however, when construction costs exceed four (4) times the estimated annual revenue excluding fuel revenue to be derived by the Company, the customer may make a contribution in aid of construction of the excess cost or pay the Company's standard facility rate on the excess construction cost in addition to the rate charges above.

ADJUSTMENT FOR FUEL AND VARIABLE ENVIRONMENTAL COSTS

Fuel costs of $.02728 per Kwhr. are included in the energy charge and are subject to adjustment by order of the Public Service Commission of South Carolina.

STORM DAMAGE COMPONENT

The energy charges above include a storm damage component of $.00038 per Kwhr. for accumulation of a storm damage reserve.

SALES AND FRANCHISE TAX

To the above will be added any applicable sales tax, franchise fee or business license tax which may be assessed by any state or governmental body.

PAYMENT TERMS

All bills are net and payable when rendered.

SPECIAL PROVISIONS

Service shall not be supplied under this rate for establishments of a commercial nature, nor to operations primarily non-municipal. Under no circumstances will the Company allow the service to be resold or shared with others.

The Company will furnish service in accordance with its standard specifications. Non-standard service will be furnished only when the customer pays the difference in costs between non-standard service and standard service or pays to the Company its normal monthly facility charge based on such difference in costs.

TERM OF CONTRACT

Contracts shall be written for a period of not less than ten (10) years.

GENERAL TERMS AND CONDITIONS

The Company's General Terms and Conditions are incorporated by reference and are a part of this rate schedule.

RATE 14 **FARM SERVICE**

AVAILABILITY

This rate is available to customers using the Company's standard service which is specified as a single point of delivery per premises from an existing overhead distribution system on farms for producing but not processing agricultural, dairy, poultry and meat products.

Service shall not be supplied under this rate for establishments of a commercial nature such as stores, shops, stands, restaurants, service stations or any non-farm operations; nor for processing, distributing or selling farm or other products not originating through production on the premises served. Motors rated in excess of 20 H.P. will not be served on this rate. It is available for farm commercial operations including irrigation, grain elevators and crop drying for farm products produced on the premises served. It is not available for resale service.

CHARACTER OF SERVICE

Alternating Current, 60 hertz. Voltage and phase at the option of the Company.

RATE PER MONTH

			Summer (Billing Months J une-September)		Winter (Billing Months October-May)	
Basic Facilities Charge:			$ 8.00		$ 8.00	
Plus Energy Charge:						
First	800	Kwhrs.@	$ 0.09988	per Kwhr.	$ 0.09988	per Kwhr.
Excess over	800	Kwhrs.@	$ 0.10989	per Kwhr.	$ 0.09588	per Kwhr.

MINIMUM CHARGE

The monthly minimum charge shall be the basic facilities charge as stated above, provided however, when construction costs Exceed four (4) times the estimated annual revenue excluding fuel revenue to be derived by the Company, the customer may make a contribution in aid of construction of the excess cost or pay the Company's standard facility rate on the excess construction cost in addition to the rate charges above.

ADJUSTMENT FOR FUEL AND VARIABLE ENVIRONMENTAL COSTS

Fuel costs of $.02728 per Kwhr. are included in the energy charge and are subject to adjustment by order of the Public Service Commission of South Carolina.

STORM DAMAGE COMPONENT

The energy charges above include a storm damage component of $.00038 per Kwhr. for accumulation of a storm damage reserve.

SALES AND FRANCHISE TAX

To the above will be added any applicable sales tax, franchise fee or business license tax which may be assessed by any state and governmental body.

PAYMENT TERMS

All bills are net and payable when rendered.

SPECIAL PROVISIONS

The Company will furnish service in accordance with its standard specifications. Non-standard service will be furnished only when the customer pays the difference in costs between non-standard service and standard service or pays to the Company its normal monthly facility charge based on such difference in costs.

TERM OF CONTRACT

The contract terms will depend on the conditions of service. No contract shall be written for a period of not less than five (5) years. A separate contract shall be written for each meter at each location.

GENERAL TERMS AND CONDITIONS

The Company's General Terms and Conditions are incorporated by reference and are a part of this rate schedule.

RATE 15 (SS-1) **SUPPLEMENTARY AND STANDBY SERVICE**

AVAILABILITY

Available to Small Power Producers and co-generators that are a Quality Facility as defined by the Federal Energy Regulatory Commission (FERC) Order No. 70 under Docket No. RM 79-54. This schedule is not available to Qualifying Facilities with a power production capacity greater than 100 KW.

SUPPLEMENTARY SERVICE

Supplementary service is defined herein as power supplied by the Company to a Qualifying Facility in addition to that which the Qualifying Facility generates itself. Supplementary service will be provided by the Company under a retail electric service schedule which the customer will establish in conjunction with the implementation of this Supplementary and Standby Service rate.

SUPPLEMENTARY SERVICE

1) Standby service under this schedule is defined herein as power supplied by the Company to a Qualifying Facility to replace energy ordinarily generated by a Qualifying Facility during a scheduled or unscheduled outage.
2) Standby service is available to customers establishing a firm demand which is billed under a retail electric service schedule of the Company. If no firm demand is established by the customer for the purpose of taking Supplementary power, then Standby service will be provided as Supplementary service and billed on the applicable retail electric service schedule.
3) Standby service is defined for each 15-minute interval as the minimum of: (1) the Standby contracted demand, and, (2) the difference between the measured load and the contracted firm demand, except that such difference shall not be less than zero.
4) Supplementary Service is defined as all power supplied by the Company not defined herein as Standby Service.
5) The Standby contract demand shall be limited to the power production capacity of the Qualifying Facility.

STANDBY SERVICE POWER RATE PER MONTH

Basic Facilities Charge	$	155.00
Demand Charge per KW of Contract Demand	$	4.49
Energy Charge:		
On-Peak KWH	$	0.04604
Off-Peak KWH	$	0.03509

DETERMINATION OF ON-PEAK AND OFF-PEAK HOURS

A. On-Peak Hours:
On-peak hours are defined to be 10:00 a.m. - 10:00 p.m. for the months of June-September, excluding weekends.

B. Off-Peak Hours:
All hours not defined as on-peak hours are considered to be off-peak.

POWER FACTOR

The customer must maintain a power factor of as near unity as practicable. If the power factor of the customer's installation falls below 85%, the Company shall adjust the billing demand to a basis of 85% power factor.

LIMITING PROVISION

The Standby Service power rate will be available for 1325 annual hours of consumption beginning in May and ending in April, or for a prorated share thereof for customers who begin to receive service in months other than May. Accounts on this rate are subject to the following condition: Standby service will be available for a maximum of 120 On-Peak Hours.

If this account exceeds: (1) 1325 hours of Standby service annually, or (2) 120 on-peak hours of Standby service, the account will be billed on the rate normally applied to customer's Supplementary service load for the current billing month and the subsequent eleven months.

ADJUSTMENT FOR FUEL AND VARIABLE ENVIRONMENTAL COSTS

Fuel costs of $.02716 per Kwhr. are included in the energy charge and are subject to adjustment by order of the Public Service Commission of South Carolina.

STORM DAMAGE COMPONENT

The energy charges above include a storm damage component of $.00008 per Kwhr. for accumulation of a storm damage reserve.

SALES AND FRANCHISE TAX

To the above will be added any applicable sales tax, franchise fee or business license tax which may be assessed by any state or local governmental body.

PAYMENT TERMS

All bills are net and payable when rendered.

SPECIAL PROVISIONS

The customer is responsible for all costs associated with interconnection to the Company's system for the purpose of obtaining Supplementary or Standby power.

TERM OF CONTRACT

Contracts shall be written for a period of not less than three (3) years.

GENERAL TERMS AND CONDITIONS

The Company's General Terms and Conditions are incorporated by reference and a part of this rate schedule.

RATE 16 **GENERAL SERVICE TIME-OF-USE**

AVAILABILITY

This rate is available to any non-residential customer using the Company's standard service which is specified as a single point of delivery per premises from an existing overhead distribution system for power and light requirements and having an on-peak demand of less than 1,000 KW. The second billing month within a twelve billing month period that on-peak demand exceeds 1,000 KW will terminate eligibility under this rate schedule. It is not available for resale service.

CHARACTER OF SERVICE

Alternating Current, 60 hertz. Voltage and phase at the option of the Company.

RATE PER MONTH

I.	**Basic Facilities Charge:**	$ 20.15	
II.	**Energy Charge:**		
A.	On-Peak Kwhrs.		
	1. Months of June-September	$ 0.18170	per Kwhr.
	2. Months of October-May	$ 0.14318	per Kwhr.
B.	Off-Peak Kwhrs.		
	First 1,000 off-peak Kwhrs. @	$ 0.07268	per Kwhr.
	Excess over 1,000 off-peak Kwhrs. @	$ 0.07733	per Kwhr.

DETERMINATION OF ON-PEAK HOURS

A. On-Peak Hours:

June-September:

The on-peak summer hours are defined as the hours between 1:00 p.m.-9:00 p.m., Monday-Friday, excluding holidays.*

October-May:

The on-peak non-summer hours are defined as those hours between 6:00 a.m.-10:00 a.m. and 6:00 p.m.-10:00 p.m. Monday-Friday, excluding holidays.*

B. Off-Peak Hours:

The off-peak hours in any month are defined as all hours not specified as on-peak hours.

*Holidays are: New Year's Day, Memorial Day, Independence Day, Labor Day, Thanksgiving Day and Christmas Day.

MINIMUM CHARGE

The monthly minimum charge shall be the basic facilities charge as stated above, provided however, when construction costs exceed four (4) times the estimated annual revenue excluding fuel revenue to be derived by the Company, the customer may make a contribution in aid of construction cost in addition to the rate charges above.

ADJUSTMENT FOR FUEL AND VARIABLE ENVIRONMENTAL COSTS

Fuel costs of $.02728 per Kwhr. are included in the energy charge and are subject to adjustment by order of the Public Service Commission of South Carolina.

STORM DAMAGE COMPONENT

The energy charges above include a storm damage component of $.00038 per Kwhr. for accumulation of a storm damage reserve.

SALES AND FRANCHISE TAX

To the above will be added any applicable sales tax, franchise fee or business license tax which may be assessed by any state or local governmental body.

POWER FACTOR

If the power factor of the customer's installation falls below 85%, the Company may adjust the billing to a basis of 85% power factor.

PAYMENT TERMS

All bills are net and payable when rendered.

SPECIAL PROVISIONS

The Company will furnish service in accordance with its standard specifications. Non-standard service will be furnished only when the customer pays the difference in costs between non-standard service and standard service or pays to the Company its normal monthly facility charge based on such difference in costs.

TERM OF CONTRACT

The contract terms will depend on the conditions of service. Contracts for installations of a permanent nature shall be written for a period of not less than one (1) year. A separate contract shall be written for each meter at each location.

GENERAL TERMS AND CONDITIONS

The Company's General Terms and Conditions are incorporated by reference and are a part of this rate schedule.

RATE 19

GENERAL SERVICE
CONCURRENT DEMAND
TIME-OF-USE

AVAILABILITY

This rate is available at the Company's discretion, to a maximum of 10 business entities using the Company's standard electric service. Each business entity shall be comprised of at least 2 non-contiguous premises having a total combined contract demand of at least 1,000 KVA. in addition, each premises shall have a minimum contract demand of 50 KVA. A business entity is defined as a single corporation, partnership, or individual owner. This rate is not available for individual franchise units of a business, nor for subsidiaries operating as a separate corporation or partnership. The individual premises which comprise the business entity should possess similar characteristics and/or load patterns common to the industry in which the entity does business. This schedule is not available to entities which form an association or similar organization solely in an attempt to qualify for service under this rate. The Company reserves the right to make a final determination on what constitutes a business entity as well as the premises making up that entity. This rate is not available for residential customers or resale service.

Service under this rate schedule is dependent on the Company procuring and installing necessary metering equipment and may not be available to premises where multiple delivery points on contiguous properties are not currently combined under contract.

CHARACTER OF SERVICE

Alternating Current, 60 hertz, three phase metering at the delivery voltage which shall be standard to the Company's operation.

RATE PER MONTH

I. The Diversity Charge will be computed utilizing actual data or modeled using available sample data from similar entities. Once actual data is available for a twelve month period, the Diversity Charge will be reviewed and may be adjusted. The Diversity charge will not be less than zero. The Diversity Charge will be computed according to the following formula:

$$\text{Diversity Charge} = \frac{AC1 \quad C2\ A}{12}$$

Where AC1 = Annual Cost Under Current Rate(s)
AC2 = Annual Cost Projected Under Concurrent Rate

II. Basic Facilities Charge:	$	155.00	per Premises
III. Demand Charge:			
A. Concurrent On-Peak Billing Demand			
1. Summer Months of June-September @	$	19.15	per KVA
2. Non-Summer Months of October-May @	$	12.72	per KVA
B. Concurrent Off-Peak Billing Demand			
1. All Off-Peak Billing Demand @	$	3.56	per KVA
IV. Energy Charge:			
A. On-Peak Kwhrs.			
1. Summer Months of June-September @	$	0.06986	per Kwhr.
2. Non-Summer Months of October-May @	$	0.04604	per Kwhr.
B. Off-Peak Kwhrs.			
1. All Off-Peak Kwhrs. @	$	0.03509	per Kwhr.

BILLING DEMAND

The concurrent billing demand for the entity will be the maximum integrated 15 minute concurrent demand which may be on a rolling time interval for all the premises' metering points during the calendar month.

For the summer months, the concurrent on-peak billing demand shall be the maximum integrated fifteen minute concurrent demand measured during the on-peak hours of the current month.

For the non-summer months, the concurrent on-peak billing demand will be the greater of: (1) the maximum integrated fifteen minute concurrent demand measured during the on-peak hours of the current month, or (2) eighty percent (80%) of the maximum integrated concurrent demand occurring during the on-peak hours of the preceding months.

The concurrent off-peak billing demand shall be the greatest of the following positive differences: (1) the maximum integrated fifteen minute concurrent demand measured during the off-peak hours minus the on-peak billing demand, (2) the contract demand minus the on-peak billing demand, or (3) 50 KVA per premises minus the on-peak billing demand.

RATE 19

GENERAL SERVICE
CONCURRENT DEMAND
TIME-OF-USE

DETERMINATION OF ON-PEAK AND OFF PEAK HOURS

A. On-Peak Hours During Summer Months:

June-September:

The on-peak summer hours are defined as the hours between 1:00 p.m.-9:00 p.m., Monday-Friday, excluding holidays.*

B. On-Peak Hours During Non-Summer Months:

May and October:

The on-peak non-summer hours are defined as the hours between 1:00 p.m.-9:00 p.m., Monday-Friday, excluding holidays.*

November-April:

Thpeak non-summer hours are defined as the hours between 6:00 a.m.-12:00 noon and 5:00p.m.-9:00 p.m., Monday-Friday, excluding holidays.*

C. Off-Peak Hours:

The off-peak hours in any month are defined as all hours not specified above as on-peak hours.

*Holidays are: New Year's Day, Memorial Day, Independence Day, Labor Day, Thanksgiving Day and Christmas Day.

ADDITION OR REMOVAL OF A PREMISES

An additional premises may be added subsequent to the initial five (5) year contract without an increase in the diversity charge if the entity extends the existing concurrent contract so that the term extends five (5) years after the addition of the new premises. A premises existing at the time that the entity initially elects to take service under this rate schedule may be added without an extension in the concurrent contract term; however, there will be an increase in the diversity charge as each pre-existing premises is added. If an entity wants to terminate service to a premises under this rate schedule and the same time does not add another premises which includes an extension of the contract term, the Company will determine the appropriate termination charge. Alternatively, if the entity adds an additional premises and prefers not to extend the contract term, the diversity charge will increase accordingly and the entity agrees to reimburse the Company for the total cost of connection to the Company's system if service to the new premises is terminated within five (5) years of the service date.

ADJUSTMENT FOR FUEL AND VARIABLE ENVIRONMENTAL COSTS

Fuel costs of $.02716 per Kwhr. are included in the energy charge and are subject to adjustment by order of the Public Service Commission of South Carolina.

STORM DAMAGE COMPONENT

The energy charges above include a storm damage component of $.00022 per Kwhr. for accumulation of a storm damage reserve.

BILLING AND PAYMENT TERMS

Bills will be calculated on a monthly basis. Each premises will receive an individual information bill and the entity will receive a combined bill summarizing all of the premises. All payments, as well as any credit and collection activities, will be at the entity level. All bills are net and payable when rendered.

SALES AND FRANCHISE TAX

For each premises served under this rate, any applicable sales tax, franchise fee or business license tax which may be assessed by any state or local governmental body, will be added to the monthly bill..

METERING

Service under this rate will be provided only after the Company procures and installs at each premises metering which has interval data capabilities to allow for the aggregation of demand for each 15 minute interval in the billing period. Each entity may be required to contribute to the cost of metering installed by the Company to qualify for service under this rate. In addition, the entity must provide a dedicated phone line at each metering point.

TERM OF CONTRACT

The contract terms will depend on the conditions of service above. No contract shall be written for a period of less than five (5) years. A master contract shall be written to include all premises amended as premises are added or deleted.

SPECIAL PROVISIONS

The Company will furnish service in accordance with its standard specifications. Non-standard service will be furnished only when the customer pays the difference in costs between non-standard service and standard service or pays to the Company its normal monthly facility charge based on such difference in costs.

GENERAL TERMS AND CONDITIONS

The Company's General Terms and Conditions are incorporated by reference and are a part of this rate schedule.

RATE 20 MEDIUM GENERAL SERVICE

AVAILABILITY

This rate is available to any non-residential customer using the Company's standard service for power and light requirements and having a contract demand of 75 KVA or over. It is not available for resale service.

CHARACTER OF SERVICE

Alternating Current, 60 hertz, three phase, metering at the delivery voltage which shall be standard to the Company's operation.

RATE PER MONTH

Demand Charge:

First 75 KVA of Billing Demand	$	1,260.50	
Excess over 75 KVA of Billing Demand @	$	14.94	per KVA

The billing demand (to the nearest whole KVA) shall be the greatest of: (1) the maximum integrated fifteen minute demand measured (which may be on a rolling time interval) during the current month; or (2) eighty percent (80%) of the highest demand occurring during the billing months June through September in the eleven preceding months; or (3) sixty percent (60%) of the highest demand occurring during the billing months of October through May in the eleven preceding months; or (4) the contract demand; or (5) 75 KVA.

Plus Energy Charge:

First 75,000	$	0.03947	per Kwhr.
Excess over 75,000	$	0.03710	per Kwhr.

MINIMUM CHARGE

The monthly minimum charge is the demand as determined above. The Company may allow a buildup period not to exceed six months for new and expanding accounts during which time the contract demand and/or the minimum demand specified in the rate schedule may be waived. The Company shall not commit itself to a buildup period exceeding six months without prior approval of the Commission for the specific account involved.

ADJUSTMENT FOR FUEL AND VARIABLE ENVIRONMENTAL COSTS

Fuel costs of $.02716 per Kwhr. are included in the energy charge and are subject to adjustment by order of the Public Service Commission of South Carolina.

STORM DAMAGE COMPONENT

The energy charges above include a storm damage component of $.00022 per Kwhr. for accumulation of a storm damage reserve.

SALES AND FRANCHISE TAX

To the above will be added any applicable sales tax, franchise fee or business license tax which may be assessed by any state or local governmental body.

PAYMENT TERMS

All bills are net and payable when rendered.

SPECIAL PROVISIONS

The Company will furnish service in accordance with its standard specifications. Non-standard service will be furnished only when the customer pays the difference in costs between non-standard service and standard service or pays to the Company its normal monthly facility charge based on such difference in costs.

TERM OF CONTRACT

The contract terms will depend on the conditions of service. No contract shall be written for a period of less than five (5) years.
A separate contract shall be written for each meter.

GENERAL TERMS AND CONDITIONS

The Company's General Terms and Conditions are incorporated by reference and a part of this rate schedule.

RATE 21

GENERAL SERVICE
TIME-OF-USE-DEMAND

AVAILABILITY

This rate is available to any customer using the Company's standard service for power and light requirements and having a contract demand of 50 KVA and a maximum demand of less than 1,000 KVA. It is not available for resale service.

CHARACTER OF SERVICE

Alternating current, 60 hertz, three phase, metering at the delivery voltage which shall be standard to the Company's operation.

RATE PER MONTH

I. Basic Facilities Charge:	$	155.00	
II. Demand Charge:			
A. On-Peak Biling Demand:			
1. Summer Months of June-September @	$	19.15	per KVA
2. Non-Summer Months of October-May @	$	12.72	per KVA
B. Off-Peak Billing Demand			
1. All Off-Peak Billing Demand @	$	3.56	per KVA
III. Energy Charge:			
A. On-Peak Kwhrs.			
1. Summer Months of June-September @	$	0.06986	per Kwhr.
2. Non-Summer Months of October-May @	$	0.04604	per Kwhr.
B. Off-Peak Kwhrs.			
1. All Off-Peak Kwhrs. @	$	0.03509	per Kwhr.

BILLING DEMAND

The billing demands will be rounded to the nearest whole KVA. The maximum integrated fifteen minute demand for any period may be recorded on a rolling time interval.

For the summer months, the on-peak billing demand shall be the maximum integrated fifteen minute demand measured during the on-peak hours of the current month.

For the non-summer months, the on-peak billing demand will be the greater of: (1) the maximum integrated fifteen minute demand measured during the on-peak hours of the current month, or (2) eighty percent (80%) of the maximum integrated demand occurring during the on-peak hours of the preceding summer months.

The off-peak billing demand shall be the greatest of the following positive differences: (1) the maximum integrated fifteen minute demand measured during the off-peak hours minus the on-peak billing demand, (2) the contract demand minus the on-peak billing demand or (3) 50 KVA minus the on-peak billing demand.

DETERMINATION OF ON-PEAK AND OFF-PEAK HOURS

A. On-Peak Hours During Summer Months:

June-September:

The on-peak summer hours are defined as the hours between 1:00 p.m.-9:00 p.m., Monday-Friday, excluding holidays.*

B. On-Peak Hours During Non-Summer Months:

May and October:

The on-peak non-summer hours are defined as the hours between 1:00 p.m.-9:00 p.m., Monday-Friday, excluding holidays.*

November-April:

The on-peak non-summer hours are defined as these hours between 6:00 a.m.-12:00 noon and 5:00 p.m.-9:00 p.m., Monday-Friday, excluding holidays.*

C. Off-Peak Hours:

The off-peak hours in any month are defined as all hours not specified as on-peak hours.

*Holidays are: New Year's Day, Memorial Day, Independence Day, Labor Day, Thanksgiving Day and Christmas Day.

RATE 21

GENERAL SERVICE
TIME-OF-USE-DEMAND

ADJUSTMENT FOR FUEL AND VARIABLE ENVIRONMENTAL COSTS

Fuel costs of $.02716 per Kwhr. are included in the energy charge and are subject to adjustment by order of the Public Service Commission of South Carolina.

STORM DAMAGE COMPONENT

The energy charges above include a storm damage component of $.00022 per Kwhr. for accumulation of a storm damage reserve.

SALES AND FRANCHISE TAX

To the above will be added any applicable sales tax, franchise fee or business license tax which may be assessed by any state or local governmental body.

PAYMENT TERMS

All bills are net and payable when rendered.

SPECIAL PROVISIONS

The Company will furnish service in accordance with its standard specifications. Non-standard service will be furnished only when the customer pays the difference in costs between non-standard service and standard service or pays to the Company its normal monthly facility charge based on such difference in costs.

TERM OF CONTRACT

The contract terms will depend on the conditions of service. No contract shall be written for a period less than five (5) years. A separate contract shall be written for each meter at each location.

GENERAL TERMS AND CONDITIONS

The Company's General Terms and Conditions are incorporated by reference and a part of this rate schedule.

RATE 21A

EXPERIMENTAL PROGRAM - GENERAL SERVICE
TIME-OF-USE-DEMAND

AVAILABILITY

This rate is available on a voluntary "first come, first serve" basis to the first 250 Rate 20 customer accounts and any Rate 21 customer account that qualify under the provisions of the stipulation approved by the South Carolina Public Service Commission in Docket #2002-223-E order No. 2003-38 dated January 31, 2003. This rate will be closed after the initial participant group is established, except there will be 25 additional customer accounts that will be allowed to participate on a "first come first serve' basis for new facilities constructed by customers in the initial participant group and as provided for in the stipulation as referenced above. The stipulation referenced above shall provide guidance as to any issue regarding availability on this rate. It is not available for resale service.

CHARACTER OF SERVICE

Alternating current, 60 hertz, three phase, metering at the delivery voltage which shall be standard to the Company's operation.

RATE PER MONTH

I. Basic Facilities Charge:	$	155.00	
II. Demand Charge:			
A. On-Peak Billing Demand:			
1. Summer Months of June-September @	$	18.38	per KVA
2. Non-Summer Months of October-May @	$	11.41	per KVA
B. Off-Peak Billing Demand			
1. All Off-Peak Billing Demand @	$	3.56	per KVA
III. Energy Charge:			
A. On-Peak Kwhrs.			
1. Summer Months of June-September @	$	0.06566	per Kwhr.
2. Non-Summer Months of October-May @	$	0.04327	per Kwhr.
B. Off-Peak Kwhrs.			
1. All Off-Peak Kwhrs. @	$	0.03298	per Kwhr.

BILLING DEMAND

The billing demands will be rounded to the nearest whole KVA. The maximum integrated fifteen minute demand for any period may be recorded on a rolling time interval.

For the summer months, the on-peak billing demand shall be the maximum integrated fifteen minute demand measured during the on-peak hours of the current month.

For the non-summer months, the on-peak billing demand will be the greater of: (1) the maximum integrated fifteen minute demand measured during the on-peak hours of the current month, or (2) eighty percent (80%) of the maximum integrated demand occurring during the on-peak hours of the preceding summer months.

The off-peak billing demand shall be the greatest of the following positive differences: (1) the maximum integrated fifteen minute demand measured during the off-peak hours minus the on-peak billing demand, (2) the contract demand minus the on-peak billing demand or (3) 50 KVA minus the on-peak billing demand.

DETERMINATION OF ON-PEAK AND OFF-PEAK HOURS

A. On-Peak Hours During Summer Months:

June-September:

The on-peak summer hours are defined as the hours between 1:00 p.m.-9:00 p.m., Monday-Friday, excluding holidays.*

B. On-Peak Hours During Non-Summer Months:

May and October:

The on-peak non-summer hours are defined as the hours between 1:00 p.m.-9:00 p.m., Monday-Friday, excluding holidays.*

November-April:

The on-peak non-summer hours are defined as these hours between 6:00 a.m.-12:00 noon and 5:00 p.m.-9:00 p.m., Monday-Friday, excluding holidays.*

C. Off-Peak Hours:

The off-peak hours in any month are defined as all hours not specified as on-peak hours.

*Holidays are: New Year's Day, Memorial Day, Independence Day, Labor Day, Thanksgiving Day and Christmas Day.

RATE 21A

EXPERIMENTAL PROGRAM - GENERAL SERVICE TIME-OF-USE-DEMAND

ADJUSTMENT FOR FUEL AND VARIABLE ENVIRONMENTAL COSTS

Fuel costs of $.02716 per Kwhr. are included in the energy charge and are subject to adjustment by order of the Public Service Commission of South Carolina.

STORM DAMAGE COMPONENT

The energy charges above include a storm damage component of $.00022 per Kwhr. for accumulation of a storm damage reserve.

SALES AND FRANCHISE TAX

To the above will be added any applicable sales tax, franchise fee or business license tax which may be assessed by any state or local governmental body.

PAYMENT TERMS

All bills are net and payable when rendered.

SPECIAL PROVISIONS

The Company will furnish service in accordance with its standard specifications. Non-standard service will be furnished only when the customer pays the difference in costs between non-standard service and standard service or pays to the Company its normal monthly facility charge based on such difference in costs.

TERM OF CONTRACT

The contract terms will depend on the conditions of service. The contract for this experimental program shall be written for a period of 48 months as provided for in the stipulation approved by the South Carolina Public service Commission in docket No. 2002-223-E, order No. 2003-38 dated July 31, 2003. A separate contract shall be written for each meter at each location.

GENERAL TERMS AND CONDITIONS

The Company's General Terms and Conditions are incorporated by reference and a part of this rate schedule.

RATE 22 (S) **SCHOOL SERVICE**

AVAILABILITY

This rate is available to customers using the Company's standard service which is specified as a single point of delivery per premises from an existing overhead distribution system for general light and/or power service to schools. It is not available for resale service. It is only available to recognized non-boarding schools with up through grade twelve.

CHARACTER OF SERVICE

Alternating Current, 60 hertz. Voltage and phase at the option of the Company.

RATE PER MONTH

Basic Facilities Charge:			$ 10.80	
Plus Energy Charge:				
First 50,	000	Kwhrs.@	$ 0.08662	per Kwhr.
Excess over	50,000	Kwhrs.@	$ 0.10048	per Kwhr.

MINIMUM CHARGE

The monthly minimum charge shall be the basic facilities charge as stated above, provided however, when construction costs exceed four (4) times the estimated annual revenue excluding fuel revenue to be derived by the Company, the customer may make a contribution in aid of construction of the excess cost or pay the Company's standard facility rate on the excess construction cost in addition to the rate charges above.

ADJUSTMENT FOR FUEL AND VARIABLE ENVIRONMENTAL COSTS

Fuel costs of $.02728 per Kwhr. are included in the energy charge and are subject to adjustment by order of the Public Service Commission of South Carolina.

STORM DAMAGE COMPONENT

The energy charges above include a storm damage component of $.00038 per Kwhr. for accumulation of a storm damage reserve.

SALES AND FRANCHISE TAX

To the above will be added any applicable sales tax, franchise fee or business license tax which may be assessed by any state or local governmental body.

PAYMENT TERMS

All bills are net and payable when rendered.

SPECIAL PROVISIONS

The Company will furnish service in accordance with its standard specifications. Under no conditions will the Company allow the service to be resold to or shared with others. Non-standard service will be furnished only when the customer pays the difference in costs between non-standard service and standard service or pays to the Company its normal monthly facility charge based on such difference in costs.

When a school offers activities that, in the sole opinion of the Company, are of a commercial nature such as day care, camps or recreational activities, the Company may require that the account be served under the appropriate general service rate.

TERM OF CONTRACT

Contracts shall be written for a period of not less than five (5) years. A separate contract shall be written for each meter at each location.

GENERAL TERMS AND CONDITIONS

The Company's General Terms and Conditions are incorporated by reference and are a part of this rate schedule.

RATE 23 **INDUSTRIAL POWER SERVICE**

AVAILABILITY

This rate is available to any customer classified in the major industrial group of manufacturing with 10-14 or 20-39 as the first two digits of the Standard Industrial Classification or 21 or 31-33 as the first two digits of the six digit North American Industry Classification System using the Company's standard service for power and light requirements and having a contract demand of 1,000 KW or over. It is not available for resale service.

CHARACTER OF SERVICE

Alternating Current, 60 hertz, three phase, metering at the delivery voltage which shall be standard to the Company's operation.

RATE PER MONTH

Demand Charge:

First 1,000 KW of Billing Demand	$	13,600.00	
Excess over 1,000 KW of Billing Demand @	$	12.20	per KW

The billing demand (to the nearest whole KW) shall be the greatest of: (1) the maximum integrated fifteen minute demand measured (which may be on a rolling time interval) during the current month; or (2) eighty percent (80%) of the highest demand occurring during the billing months of June through September in the eleven preceding months; or (3) sixty (60%) of the highest demand occurring during the billing months of October through May in the eleven preceding months; or (4) the contract demand; or (5) 1,000 KW.

The customer shall maintain a power factor of as near unity as practicable. If the power factor of the customer's installation falls below 85%, the Company will adjust the billing demand to a basis of 85% power factor.

Plus Energy Charge:

All Kwhrs. @	$	0.03567	per Kwhr.

DISCOUNT

A discount of $0.60 per KW of billing demand will be allowed when the service is supplied at a delivery voltage of 46,000 volts or higher.

MINIMUM CHARGE

The monthly minimum charge is the demand as determined above. The Company may allow a buildup period not to exceed six months for new and expanding accounts during which time the contract demand and/or the minimum demand specified in the rate schedule may be waived. The Company shall not commit itself to a buildup period exceeding six months without prior approval of the Commission for the specific account involved.

ADJUSTMENT FOR FUEL AND VARIABLE ENVIRONMENTAL COSTS

Fuel costs of $.02685 per Kwhr. are included in the energy charge and are subject to adjustment by order of the Public Service Commission of South Carolina.

STORM DAMAGE COMPONENT

The energy charges above include a storm damage component of $.00008 per Kwhr. for accumulation of a storm damage reserve.

SALES AND FRANCHISE TAX

To the above will be added any applicable sales tax, franchise fee or business license tax which may be assessed by any state or local governmental body.

PAYMENT TERMS

All bills are net and payable when rendered.

SPECIAL PROVISIONS

The Company will furnish service in accordance with its standard specifications. Non-standard service will be furnished only when the customer pays the difference in costs between non-standard service and standard service or pays to the Company its normal monthly facility charge based on such difference in costs.

TERM OF CONTRACT

The contract terms will depend on the conditions of service. No contract shall be written for a period less than five (5) years. A separate contract shall be written for each meter at each location.

GENERAL TERMS AND CONDITIONS

The Company's General Terms and Conditions are incorporated by reference and a part of this rate schedule.

RATE 24

LARGE GENERAL SERVICE
TIME-OF-USE

AVAILABILITY

This rate is available to any customer using the Company's standard service for power and light requirements and having a contract demand of 1,000 KW or over. It is not available for resale service.

CHARACTER OF SERVICE

Alternating Current, 60 hertz, three phase, metering at the delivery voltage which shall be standard to the Company's operation.

RATE PER MONTH

I.	**Basic Facilities Charge:**	$ 1,400.00	
II.	**Demand Charge:**		
A.	On-Peak Billing Demand		
	1. Summer Months of June-September @	$ 14.97	per KW
	2. Non-Summer Months of October-May @	$ 10.48	per KW
B.	Off-Peak Billing Demand		
	1. All Off-Peak Billing Demand @	$ 4.49	per KW
III.	**Energy Charge:**		
A.	On-Peak Kwhrs.		
	1. Summer Months of June-September @	$ 0.06299	per Kwhr.
	2. Non-Summer Months of October-May @	$ 0.04231	per Kwhr.
B.	Off-Peak Kwhrs.		
	1. All Off-Peak Kwhrs. @	$ 0.03230	per Kwhr.

BILLING DEMAND

The billing demands will be rounded to the nearest whole KW. If the power factor of the customer's current month maximum integrated fifteen minute KW demand for the on-peak and off-peak time periods are less than 85%, then the Company will adjust same to 85%. The maximum integrated fifteen minute demand for any period may be recorded on a rolling time interval.

For the summer months, the on-peak billing demand shall be the maximum integrated fifteen minute demand measured during the on-peak hours of the current month.

For the non-summer months, the on-peak billing demand will be the greater of: (1) the maximum integrated fifteen minute demand measured during the on-peak hours of the current month, or (2) eighty percent (80%) of the maximum integrated demand occurring during the on-peak hours of the preceding summer months.

The off-peak billing demand shall be the greatest of the following positive differences: (1) the maximum integrated fifteen minute demand measured during the off-peak hours minus the on-peak billing demand, or (2) the contract demand minus the on-peak billing demand, or (3) 1,000 KW minus the on-peak billing demand.

DISCOUNT

A discount of $0.60 per KW of on-peak and off-peak billing demand will be allowed when the service is supplied at a delivery voltage of 46,000 volts or higher.

DETERMINATION OF ON-PEAK HOURS

A. On-Peak Hours During Summer Months:

June-September:

The on-peak summer hours are defined as the hours between 1:00 p.m.-9:00 p.m., Monday-Friday, excluding holidays.*

B. On-Peak Hours During Non-Summer Months:

May and October:

The on-peak non-summer hours are defined as the hours between 1:00 p.m.-9:00 p.m., Monday-Friday, excluding holidays.*

November-April:

The on-peak non-summer hours are defined as those hours between 6:00 a.m.-12:00 noon and 5:00 p.m.-9:00 p.m., Monday-Friday, excluding holidays.*

C. Off-Peak Hours:

The off-peak hours in any month are defined as all hours not specified as on-peak hours.

*Holidays are: New Year's Day, Memorial Day, Independence Day, Labor Day, Thanksgiving Day and Christmas Day.

MINIMUM CHARGE

The monthly minimum charge is the demand as determined above. The Company may allow a buildup period not to exceed six months for new and expanding accounts during which time the contract demand and/or the minimum demand specified in the rate schedule may be waived. The Company shall not commit itself to a buildup period exceeding six months without prior approval of the Commission for the specific account involved.

ADJUSTMENT FOR FUEL AND VARIABLE ENVIRONMENTAL COSTS

Fuel costs of $.02685 per Kwhr. are included in the energy charge and are subject to adjustment by order of the Public Service Commission of South Carolina.

STORM DAMAGE COMPONENT

The energy charges above include a storm damage component of $.00008 per Kwhr. for accumulation of a storm damage reserve.

SALES AND FRANCHISE TAX

To the above will be added any applicable sales tax, franchise fee or business license tax which may be assessed by any state or local governmnetal body.

PAYMENT TERMS

All bills are net and payable when rendered.

SPECIAL PROVISIONS

The Company will furnish service in accordance with its standard specifications. Non-standard service will be furnished only when the customer pays the difference in costs between non-standard service and standard service or pays to the Company its normal monthly facility charge based on such difference in costs.

TERM OF CONTRACT

The contract terms will depend on the conditions of service. No contract shall be written for a period of less than five (5) years. A separate contract shall be written for each meter at each location.

GENERAL TERMS AND CONDITIONS

The Company's General Terms and Conditions are incorporated by reference and a part of this rate schedule.

SOUTH CAROLINA ELECTRIC & GAS COMPANY

ELECTRIC CONTRACTED RATES

Name of Customer	Rate
State Line Accounts*	**23**

U. S. Department of Energy
Savannah River Operations

Base Contract

Demand Charge:			
Basic Facility Charge	$	1,400.00	
First 20,000 Kw	$	10.37	per KW
Excess over 20,000 Kw	$	12.20	per KW
Energy Charge:			
All KWhr. @	$	0.03567	per KWhr.

INTERNATIONAL PAPER
Eastover Mills

Economy Power Rate

Administrative Charges:	$	1,400.00	per month
On-Peak Energy Charge:			
Fuel cost of highest cost generation unit or purchased power (other than cogeneration) plus	$	0.01101	per KWhr.
Off-Peak Energy Charge:			
Fuel cost of highest cost generation unit or purchased power (other than cogeneration) plus	$	0.00605	per KWhr.
Excess Demand Charge:	$	17.50	per KW

Standby Power Rate

Demand Charge:			
On-peak June-September	$	0.32449	per KW/Day
On-peak October-May	$	0.17688	per KW/Day
Off-peak	$	0.12789	per KW/Day
Energy Charge:			
Same as that for Economy Power above			
Excess Demand Charge:	$	17.50	per KW

Effective Upon Approval Of The Public
Service Commission Of South Carolina

SOUTH CAROLINA ELECTRIC & GAS COMPANY

ELECTRIC CONTRACTED RATES

INTERNATIONAL PAPER - continued

Maintenance Power Rate	**Demand Charge:**	$	0.38137	per KW/Day
	Energy Charge:	$	0.03567	per Kwhr.
	Company Provided KVAR	$	0.14773	per KVAR

Montenay Charleston Recovery Inc

Standby Power Rate	**Facility Charge:**	$	1,400.00	per Month
	Demand Charge:			
	First 1325 hours of standby service	$	5.49	per KW
	Excess over 1325 hours of standby service	$	12.20	per KW
	Energy Charge:			
	On-peak	$	0.04289	per Kwhr.
	Off-peak	$	0.03567	per Kwhr.
Maintenance Power Rate	**Demand Charge:**	$	0.27676	per KW/Day
	Energy Charge:	$	0.03567	per Kwhr.

Contracted lighting, signal and roadway lighting, etc. Negotiated Contracts

* After contractual (1925 and 1955) adjustments

Note: (1) Fuel costs of $.02685 per KWhr are included in the Energy Charge and subject to adjustment by order of the Public Service Commission of South Carolina.

(2) The Energy Charges above include a storm damage component of $.00008 per KWhr for accumulation of a storm damage reserve except contracted lighting, including signal and roadway lighting, which is $.00152 per KWhr.

EXHIBIT O

IN-SERVICE EXPENSES

Combined Application of South Carolina Electric & Gas Company for a Certificate of Environmental Compatibility and Public Convenience and Necessity and for a Base Load Review Order
Public Service Commission Docket No. 2008-196-E

1. INTRODUCTION

This **Exhibit O, Chart A** provides SCE&G's current forecast of the in-service expenses associated with the placing into service of two Westinghouse AP1000 Advanced Passive Safety Power Plant units as V. C. Summer Nuclear Station (VCSNS) Units 2 & 3 (the Units or the Facilities).

2. DESCRIPTION OF ANNUALIZED IN-SERVICE SERVICE COST ESTIMATES (SEE ATTACHED TABLE)

1) ***Fixed Operation and Maintenance Expense*** – These are estimated costs that will not vary with the operation of the plant. Examples include plant staff, insurance, security, etc. Current estimates are based on experience at VCSNS Unit 1.

2) ***Variable Operation and Maintenance Expense*** – These are estimated costs that will vary with the operation of the plant. Examples include certain supplies, chemicals, gases, outside services, and other consumables.

3) ***Decommissioning Expense*** – At this time, an external sinking fund in the form of a trust is the method that SCE&G plans to use to provide reasonable assurance of the availability of its share of funds to decommission the facility. Amounts collected through rates would be transferred to the external trust and such deposits along with trust fund earnings must provide an amount equal to or greater than the formula-derived decommissioning cost for the facility.

4) ***Fuel Costs*** – Estimated cost of nuclear fuel for the period including uranium, enrichment, fabrication, and other associated costs.

5) ***Depreciation*** – This estimate is the annual straight-line depreciation expense associated with the projected closing amount of each unit, assuming a sixty year economic life of each nuclear unit. Transmission property is depreciated in accordance with currently approved depreciation rates.

6) ***Taxes Other Than Income*** – These costs include property taxes, gross receipts taxes, and support of PSC taxes. Property tax projections are based on the Inducement Resolution with Fairfield County with regard to fee in lieu terms applied to the in-service cost of the eligible property. Transmission property is taxed in accordance with projected system average tax millage and assessment ratios.

7) ***Return on Materials, Supplies, and Working Capital*** – These costs were estimated by applying the SCE&G's weighted average cost of capital to projected balances for fuel inventories, materials and supplies, and working capital (one-eighth of non-fuel O&M costs).

VCS Unit 2 and Unit 3
Table of In-Service Expenses
($000)

Line item:	*Unit # 2 2016*	*Unit # 3 2019*
Fixed Operation and Maintenance Expense	$38,212	$27,653
Variable Operation and Maintenance Expense	$18,041	$19,618
Decommissioning Expense	$4,372	$4,777
Fuel Costs	$45,624	$45,578
Depreciation	$57,710	$51,827
Taxes Other than Income	$44,550	$52,103
Return on Materials, Supplies, and Working Capital	$14,827	$14,786
Total	$223,336	$216,342

SCE&G expects to receive Federal production tax credits related to the Units when they become operational. Because of the year-to-year variability of the amount of those credits, SCE&G presently intends to seek Commission approval at a future date to pass the value of the available credits through to customers directly as a credit to electric fuel costs. Accordingly, the benefit of these credits is not shown above.

EXHIBIT P

ENVIRONMENTAL ASSESSMENT AND RELATED INFORMATION

Combined Application of South Carolina Electric & Gas Company for a Certificate of Environmental Compatibility and Public Convenience and Necessity and for a Base Load Review Order
Public Service Commission Docket No. 2008-196-E

1. INTRODUCTION

This **Exhibit P** provides a summary of the comprehensive Environmental Report related to the permitting, construction and placing into service of two Westinghouse AP 1000 Advanced Passive Safety Power Plant units as V. C. Summer Nuclear Station (VCSNS) Units 2 & 3 (the Units or the Facilities). SCE&G submitted the Environmental Report to the Nuclear Regulatory Commission (NRC) on March 31, 2008 as a part of its filing for a Combined Operating License for the Units. This **Exhibit P** also summarizes the geological, geotechnical and seismic information contained in the Combined Operating License Application for the Units.

An electronic copy of the Environmental Report is available on the NRC website. SCE&G will make electronic copies available to parties to this proceeding on request.

2. PROPOSED PROJECT

South Carolina Electric & Gas Company (SCE&G), an investor-owned utility, and South Carolina Public Service Authority, a state-owned utility commonly referred to as Santee Cooper, have determined that additional electrical generating capacity is needed to satisfy the growth projections for energy within their electric serve areas and those of their re-sale customers in South Carolina. Their need-for-power analysis is documented in Chapter 8 of the Environmental Report submitted to the U.S. Nuclear Regulatory Commission (NRC) as part of an application for a license to construct and operate two nuclear power units at the current V.C. Summer Nuclear Station Unit 1 near Jenkinsville, South Carolina. Maps of the Facilities and its location are found in Exhibit A to this Application.

SCE&G has conducted its environmental impact studies and assessments for the VCSNS Units 2 & 3 in accordance with the regulatory parameters encompassed within the NRC's Environmental Standard Review Plan as contained in NUREG 1555, implementing provisions of Title 10, Code of Federal Regulations, Part 51 (10 CFR 51), "Environmental Protection Regulations for Domestic Licensing and Related Regulatory Functions," and other guidance related to new site/plant applications. The discussion that follows generally tracks the sections and subjects required to be addressed, and hence were those investigated, analyzed, and are reported upon in the Environmental Report (ER). The ER comprises the content of Part Three of the Combined Operating License (COL) filed by SCE&G with the NRC on March 31, 2008.

The two new units are to be Westinghouse AP1000 advanced light water reactors. Each AP1000 has a rated thermal power of 3,400 megawatts thermal with a net electrical output of

approximately 1,117 megawatts electric. Based on the engineering computations that were current when the Environmental Reports were finalized, the forecast output of the plant was 1,107 megawatts electric. These new generation units incorporate passive design features that significantly improve the safety of the reactor over existing nuclear plants.

Water is a primary resource consideration with any power plant. Its consumption, treatment, and thermal characteristics are carefully analyzed. The two units would use water from the Monticello Reservoir for plant cooling and for all other plant-related use or consumption. Each unit would use closed-cycle, wet cooling towers for both circulating water system cooling and service water system cooling. An intake structure located on the Monticello Reservoir west of the existing Unit 1 would supply circulating water system makeup water. A water treatment facility located along the Monticello Reservoir to the east of Unit 1, comprised of a water treatment plant with its own separate intake structure, would also supply water withdrawn from the Monticello Reservoir for service water system makeup and to the potable water system, fire protection system, and plant demineralized water supply system. Monticello Reservoir receives water from the Broad River (Parr Reservoir) through the Fairfield Pumped Storage Facility.

Plant water discharges have also been carefully studied. The blowdown water from the cooling towers discharges to Parr Reservoir. The temperature of this effluent is slightly elevated above the normal river water temperatures and contains enhanced levels of natural salts, as well as, occasionally, very low permitted levels of radioactivity.

Additional detailed description on the proposed project can be found in Chapter 3 of the Environmental Report.

3. AFFECTED ENVIRONMENT

The Affected Environment is a description of the existing environmental conditions at the VCSNS site, the site vicinity, and the region. The environmental descriptions provide sufficient detail to identify those environmental resources that have the potential to be affected by the construction, operation, or decommissioning of the new units. Chapter 2 of the Environmental Report provides greater detail.

The VCSNS site is defined as the approximately 2,560 acres within the site boundary that include VCSNS Unit 1, the Fairfield Pumped Storage Facility, the southern portion of the Monticello Reservoir, and the location of the proposed Units 2 and 3; plus approximately 1,000 acres south of the site boundary. This additional land would be involved in construction activities (temporary facilities, laydown areas, and spoils disposal areas) or contain easements for the discharge pipeline and the access road. Total area for the site is approximately 3,600 acres.

The largest use within the 2,560 acres enclosed by the VCSNS Unit 1 site boundary is mixed forest, comprising 1,110 acres. Approximately 784 acres of the area within the VCSNS Unit 1 site boundary are covered by the waters of the Monticello Reservoir. A significant portion of the property (approximately 492 acres) consists of urban or built up land including: generation and maintenance facilities, laydown areas, parking lots, roads, mowed grass, and transmission line

rights-of-way. Approximately 174 acres of the area within the VCSNS Unit 1 site boundary are classified as transitional areas that are barren land.

The topography of the site consists of low rolling hills carved by a creek and drainages with elevations ranging from approximately 560 feet to 210 feet above Mean Sea Level. The Mayo Creek crosses the VCSNS site from north to south and discharges into the Broad River downstream of the Parr Reservoir. Streamside management zones at the site are protected in accordance with best management practices established by the South Carolina Forestry Commission. Forested areas within the VCSNS site are actively managed by SCANA Services' Forestry Operations group, and timber is occasionally harvested. Once timber is removed, the harvested areas are replanted with tree species appropriate to the terrain, soils, and drainage characteristics of a site.

The vicinity within 6 miles of the site occupies portions of Fairfield, Newberry, and Richland Counties and is rural, with a few homes and small farms, but much undeveloped land. The topography of the vicinity consists of low rolling hills. The community of Jenkinsville is approximately 2 miles southeast of VCSNS. The town of Peak (census year 2000 population of 61) is approximately 1.5 miles south and Pomaria (census year 2000 population of 178) is approximately 7 miles to the west.

The 4,400-acre Parr Hydro Wildlife Management Area managed by the South Carolina Department of Natural Resources for public waterfowl hunting and fishing, is adjacent to the VCSNS site. The Wildlife Management Area includes designated lands within the Enoree District of the Sumter National Forest, the Broad River (SC 34 to the dam at SC 16), and the Monticello and Parr Reservoirs. Camping is allowed along the Broad River within the Sumter National Forest. Other recreation activities such as boating, picnicking, and hiking can be enjoyed at select locations on the Monticello Reservoir, Parr Reservoir, and Broad River, and on the southern portion of Enoree District of the Sumter National Forest.

With the amount of land resource committed to this project, an understanding of the ecological resources that have the potential to be impacted by the construction and operation of new nuclear units on the VCSNS site is essential. Both terrestrial and aquatic resources could potentially be impacted and have been carefully defined and studied, and adequate precautions instituted, to keep ecological impacts within acceptable limits.

The U.S. Fish and Wildlife Service (USFWS) is responsible for designating areas of "critical habitat" for federally listed endangered and threatened terrestrial species. Such areas are considered essential to the species' conservation, and may require special management and protection. No areas designated by the USFWS as critical habitat exist at or near the VCSNS site. "Critical habitat" or similarly defined classifications do not exist for State-listed species in South Carolina. A survey for federally and state-listed species classified as threatened or endangered was conducted in May 2002 at the VCSNS site. The bald eagle was the only federally or state-listed animal species observed at the site during the 2002 survey. The bald eagle is state-listed as endangered. The USFWS removed the bald eagle from the federal list of threatened and endangered species effective August 8, 2007. At the federal level, the bald eagle is still protected under the Bald and Golden Eagle Protection Act and the Migratory Bird Treaty Act.

Surveys for federally and state-listed species classified as threatened or endangered were conducted in June 2006, September 2006, April 2007, and October 2007 in areas that would be disturbed by proposed construction activities. No federally or state-listed plants or animals were found during the 2006 surveys. A juvenile bald eagle was observed along the eastern shoreline of Parr Reservoir during the April 2007 survey; no other federally or state-listed plants or animals were observed during the April 2007 survey. In addition, no federally or state-listed plants or animals were found on the existing transmission corridors.

SCE&G has sited the proposed facilities and infrastructure so as to minimize impacts to wetlands. The upper portion of one small intermittent stream and its associated wetland extend slightly into the area in which the cooling towers would be located. The heavy haul road would cross Mayo Creek and its associated narrow wetland. Otherwise, no streams or wetlands are located in areas in which facilities or structures would be located.

The surface water bodies of interest, i.e., those that could potentially be affected by construction and operation of new units at the VCSNS site, are the Broad River, Parr Reservoir, Monticello Reservoir, the Monticello Sub-impoundment, and onsite streams, most notably Mayo Creek. Routine and special surveys of fish populations were conducted as early as three years before the operation of Unit 1 and two years after the beginning of operations. The fish community of the Parr Reservoir appeared to be largely unaffected by operations of VCSNS. Likewise, after extensive surveys conducted by biologists, South Carolina Department of Natural Resources personnel, and contractors, there was no indication that Unit 1 operations had an effect on fish populations in the Monticello Reservoir. Other surface water bodies have been carefully studied and data from over long periods of time have been analyzed with no indication that aquatic populations have been adversely and permanently affected by operation of VCSNS. Fish conservation efforts continue in the Broad River with SCE&G partnering to restore naturally dwindling numbers of the robust redhorse (*Moxostoma robustum*), a large catastomid believed to be extinct until 1991.

Historic and cultural resources also can be potentially disturbed or damaged by new construction. To support the COL application, SCE&G performed cultural resource surveys of the VCSNS site and the adjoining SCE&G property potentially affected by construction of Units 2 and 3.

Properties listed on the National Register of Historic Places and structures and buildings that have been determined as eligible for the National Register were identified using the South Carolina Department of Archives' Cultural Resources Inventory System. SCE&G met with the State Historic Preservation Office in June 2006 regarding the VCSNS COL application. During the visit, past landscape alterations and current conditions were discussed, as well as any need for additional cultural resource surveys, and results of background site files and cartographic research.

There are known to be 21 archaeological sites and standing structures within 10 miles of the proposed site that are currently listed on the National Register of Historic Places. None are located on SCE&G property. Fifty three standing structures within a 10-mile radius have been

determined to be eligible or contributing to the eligibility of a National Register district. None of these are located on SCE&G property. No archaeological sites within the 10-mile radius have been determined eligible, although four are listed on the National Register. A cemetery containing approximately 30 graves including that of General John Pearson, a Fairfield County native who served with distinction in the American Revolutionary War, is partially within the proposed site boundary. SCE&G has fenced this cemetery, and SCE&G's Forestry Operations group is familiar with this cemetery, which is marked on their timber inventory and land cover maps. SCE&G takes measures to protect the cemetery when conducting forest management activities.

Although transmission line rights-of-way associated with Unit 1 have not been specifically systematically surveyed for cultural resources, no known significant archaeological sites or standing structures currently exist within them. The routes of the new transmission lines have not yet been determined but they would follow the existing routes where possible. New corridors would be thoroughly researched to avoid disturbing cultural or historical resources.

The Catawba Indian Nation is the only federally recognized tribe in South Carolina. There are no tribal lands in the VCSNS vicinity.

4. IMPACT OF CONSTRUCTION

SCE&G examined the potential environmental impacts of construction of VCSNS Units 2 and 3. In accordance with 10 CFR 51, impacts are analyzed, and a single significance level of potential impact to each resource (i.e., small, moderate, or large) is assigned consistent with the criteria that NRC established in 10 CFR 51, Appendix B, Table B-1, Footnote 3 as follows:

SMALL Environmental effects are not detectable or are so minor that they will neither destabilize nor noticeably alter any important attribute of the resource. For the purposes of assessing radiological impacts, the Commission has concluded that those impacts that do not exceed permissible levels in the Commission's regulations are considered small.

MODERATE Environmental effects are sufficient to alter noticeably, but not to destabilize, any important attribute of the resource.

LARGE Environmental effects are clearly noticeable and are sufficient to destabilize any important attributes of the resource.

The following environmental or sociological resource areas were evaluated as having SMALL impacts:

Land Use
Water use
Water Quality
Terrestrial Ecology
Aquatic Ecology
Public and Worker Health (radiological and nonradiological)

Impacts other than SMALL are discussed below:

Land use for new transmission lines are expected to have MODERATE impacts; however, the exact routes of these transmission lines are not currently known. SCE&G would follow siting procedures established by the South Carolina Public Service Commission. Santee Cooper would follow a technically comparable process for their transmission lines.

SCE&G estimates that most in-migrating construction workers and their families would leave the region upon project completion, and residential and commercial activity would return to approximately preconstruction levels. Therefore, offsite land-use changes would be small, thus, the impact would be considered SMALL in surrounding counties of Lexington, Richland, and Newberry, but MODERATE in Fairfield County.

Commuting construction workers would have a MODERATE to LARGE impact on the traffic on two-lane highways in Fairfield and Newberry County, specifically SC 215, SC 213, and the highways that feed into them. Mitigation, such as staggering shifts, infrastructure improvements, and traffic management planning, would be necessary to accommodate the additional vehicles on SC 215 and 213.

The large construction project would reduce unemployment and create business opportunities for housing and service-related industries. SCE&G concludes that the impacts from construction on the economy or labor force in the region of influence would be SMALL in Lexington, Newberry, and Richland Counties. The impacts in Fairfield County would be LARGE because the proposed project is located in the county and because the county currently has such a small labor pool and population base. Changes to population and employment baselines would result in a LARGE impact in Fairfield County.

SCE&G concludes that the potential beneficial impacts from all types of taxes collected during construction period in various forms (personal income, business income, inventory, payroll related, sales, and personal and real property, etc) would be LARGE in Fairfield County and SMALL in Newberry, Lexington, and Richland Counties.

Chapter 4 of the Environmental Report provides greater detail on construction impacts.

5. IMPACTS OF OPERATION

SCE&G also examined the potential environmental impacts of operation of VCSNS Units 2 and 3. In accordance with 10 CFR 51, impacts are analyzed, and a single significance level of potential impact to each resource (i.e., small, moderate, or large) as defined in Section 3. The following environmental or sociological resource areas were evaluated as having SMALL impacts:

Land Use
Water use
Water Quality

Terrestrial Ecology
Aquatic Ecology
Public and Worker Health (radiological and nonradiological)

Impacts other than SMALL are discussed below:

The commuting of the combined operations workforce for all three units would have a SMALL to MODERATE impact on the traffic on two lane highways in Fairfield and Newberry County, specifically SC 215 and 213 and the highways that feed into them. Mitigation, such as staggering shifts, infrastructure improvements, and a traffic plan, would be necessary to accommodate the additional vehicles on SC 215 and 213.

In the general region, impacts of operations on the economy would be beneficial and SMALL, but economic impacts to Fairfield and Newberry counties would be MODERATE because of their rural nature and because of the significant impacts that operations would have on the tax base of Fairfield County. One of the main sources of economic impact would be property taxes assessed on the facility. A second source of property taxes would be on housing owned by the new workforce.

Chapter 5 of the Environmental Report provides greater detail on operational impacts.

6. ALTERNATIVES

SCE&G evaluated possible alternatives to construction and operation of new nuclear units at the VCSNS site.

The no-action alternative (doing nothing more than is currently being done) is not a viable alternative assuming a reasonable rate of growth in electricity demand within South Carolina.

Several alternatives exist that do not require new generating capacity, such as purchasing power from other utilities, reactivating or extending the life of current power systems, managing demand, or a combination of these alternatives. Some power is already purchased but additional purchases would not be adequate to provide the required increase in base load capacity projected into 2015. SCE&G has already extended the life of VCSNS Unit 1 and has not identified any other existing plants that could undergo life extension to meet the project demand

Demand side management is the practice of reducing customers' demand for energy through programs such as energy conservation, efficiency, and load management so that the need for additional generation capacity is eliminated or reduced. Many programs are being implemented already, and there is not much more to be gained from this alternative.

Alternative technologies such as wind, solar, hydroelectric, geothermal, biomass, municipal solid waste, petroleum liquids, fuel cells, coal, natural gas, and combinations of alternative technologies have been evaluated. Alternative technologies are worthy of additional investigation in terms of the national energy supply options. Many of them may have important

contributions to make to the energy mix, but most, for various reasons, especially in South Carolina, cannot provide the energy needed in the amounts required.

SCE&G has determined, based on environmental impacts, that neither a coal-fired nor a gas-fired plant would provide an appreciable reduction in overall environmental impact relative to a nuclear plant. This conclusion is shown in detail in Chapter 9 in the Environmental Report. Furthermore, each of these types of plants would entail a significantly greater relative environmental impact on air quality than would the proposed project. Therefore, SCE&G concludes that neither a coal-fired or gas-fired plant would be environmentally preferable to the proposed project.

Alternative sites were also considered. Impacts associated with alternative sites were compared. The comparison studied the environmental impacts of construction and operation of the proposed project at each of the alternative sites with impacts at the VCSNS site. This site-by-site comparison did not result in identification of a site obviously superior to the VCSNS site.

SCE&G also examined the use of direct cooling (without cooling towers) from the Monticello Reservoir and the use of natural draft cooling in lieu of mechanical draft cooling towers. Neither of these alternatives was found to be technically, economically, or environmentally preferable.

7. SUMMARY OF GEOLOGIC, GEOTECHNICAL AND SEISMIC STUDIES

South Carolina Electric & Gas Company also investigated the geological, seismological and geotechnical characteristics of the proposed location of the V.C. Summer Nuclear Station, Units 2 & 3 to confirm that the site was safe for the construction and operation of new nuclear power plants. The investigation also provided information on geotechnical and seismic site characteristics for input into site specific aspects of the power plant design.

The geologic investigation consisted of both regional and site studies. The geological and seismological information is presented in detail in Section 2.5 of the Final Safety Analysis Report and summarized in Section 2.6 of the Environmental Report. This information was developed from a review of previous reports prepared for the V.C. Summer Unit 1 investigation, published geologic and seismologic literature, interviews with experts in the geology and seismicity of the region surrounding the site, aerial photo analysis and geologic field reconnaissance conducted as part of the of the Unit 2 & 3 investigation. Office studies also evaluated regional geophysical maps (gravity and magnetism) to identify geologic structures deep in the earth's crust and those exposed at the ground surface. Field work included drilling 111 boreholes, conducting 36 cone penetrometer tests, installing 31 groundwater observation wells, and excavating 4 test pits at the Units 2 and 3 sites. Four deep boreholes were drilled at the site of each nuclear island; one to 350 ft, one to 215 ft, and two to 175 ft. Downhole geophysical surveys were performed in each of these boreholes. Geophysical testing included the use of a compression wave-shear wave (P-S) suspension logging tool to measure the shear wave velocity of the bedrock, a parameter important to calculating earthquake vibratory ground motions. Borings at the site provided the geological and geotechnical data to characterize the soil, underlying rock and geophysical properties of the soil and bedrock units.

The field investigation program was supplemented by a laboratory testing program to characterize material properties of both the soil and rock. SCE&G obtained values for standard engineering properties of the soils, weathered rock, sound rock, and potential backfill obtained from a local quarry. In addition, resonant column torsional shear tests were conducted on both native soils and backfill to help define the dynamic behavior of these materials.

The investigation verified that the site location is typical of the Piedmont physiographic province. The site topography consists of gently to moderately rolling hills and well-drained mature valleys. Most of the local terrain is mantled by residual soils and saprolite overlying the more-than 300 million year old Winnsboro granitic plutonic complex that intruded older metamorphic country rock consisting of deformed gneiss and amphibolite. The geotechnical data indicate that soils overlying the hard bedrock vary from highly weathered residual soils (consisting of silt and silty sand with variable clay content) to saprolite (consisting of completely weathered rock that retains relict rock structure).

The soil beneath the nuclear islands will be excavated down to sound rock and the structures of the nuclear island important to safety will be founded on sound rock or on concrete placed on sound rock. The non-safety-related annex building will be founded on structural fill placed on sound rock. Permanent perimeter slopes in the soil are at least 600 feet away from the nearest point of the nuclear islands, and at least 500 feet away from the nearest point of the non-safety-related annex buildings. Failure of these slopes, under any of the conditions to which they could be exposed during the life of the plant, will not adversely affect the safety of the nuclear power plant facilities. The temporary slopes that will be excavated for plant construction will be backfilled prior to plant operation and, therefore, will not affect the safety of the nuclear power plant facilities.

The seismic investigation consisted of a systematic evaluation of historic earthquakes and seismic (earthquake) source zones relevant to determination of the seismic hazard at the site. The earthquake catalog developed in the late 1980s by the Electric Power Research Institute and reviewed by the Nuclear Regulatory Commission was updated to incorporate earthquakes that had occurred since its publication. The assessment of vibratory ground motion incorporates developments in ground motion estimation models; updated models for earthquake sources; methods for determining site response; and new methods for defining a site-specific, performance-based earthquake ground motion [the Ground Motion Response Spectra (GMRS)] which is characterized by horizontal and vertical response spectra determined as free-field motions on hard rock.

The site-specific probabilistic seismic hazard analysis performed for Units 2 and 3 incorporates the updated earthquake catalog, and updated models of the Charleston (South Carolina) and New Madrid (Missouri) Seismic Source Zones. These two updated models incorporate the results of recent research integrating information on geologic structures and earthquake recurrence. Uncertainties in geologic and seismologic parameters are explicitly incorporated in this hazard assessment.

The geologic investigation conducted for the V.C. Summer site indicates that there are no active faults within a 200-mile radius. In addition, there is no potential for surface fault rupture within a 5-mile radius of the site. The results of the geologic, geotechnical and seismological investigations indicate that the V.C. Summer Units 2 & 3 site meets the design requirements for the Westinghouse AP1000 reactor design as certified by the U. S. Nuclear Regulatory Commission.

EXHIBIT Q

TRANSMISSION INTERCONNECTION STUDIES

Combined Application of South Carolina Electric & Gas Company for a Certificate of Environmental Compatibility and Public Convenience and Necessity and for a Base Load Review Order
Public Service Commission Docket No. 2008-196-E

1. INTRODUCTION

This **Exhibit Q** contains copies of the principal transmission system interconnect studies performed by SCE&G's transmission planning and engineering department related to VSCNS Units 2 & 3. For purposes of this cost projections in this proceeding, SCE&G has obtained from Transmission Engineering the unadjusted cost data related to these projects which is the data contained in **Exhibit F** to this Application under the heading Transmission Projects, Cash Flow.

1. Generator Interconnection System Impact Study for SCE&G V.C. Summer Nuclear #2

2. Generator Interconnection System Impact Study for SCE&G V.C. Summer Nuclear #3

3. Generator Interconnection Facilities Study SCE&G V.C. Summer Nuclear #2

4. Generator Interconnection Facilities Study SCE&G V.C. Summer Nuclear #3 – Revision #2

Generator Interconnection System Impact Study for SCE&G V.C. Summer Nuclear #2

Prepared for:
SCE&G Nuclear Group

July 5, 2007

Prepared by:
SCE&G Transmission Planning

TABLE OF CONTENTS

General Discussion ..... Page 3

I. Generator Information ..... Page 5

II. Transmission Studies ..... Page 5
- a. Power Flow Analysis ..... Page 5
- b. Short Circuit Analysis ..... Page 6
- c. Stability Analysis ..... Page 6

III. Required Interconnection Facilities ..... Page 17

IV. Engineering Design & Cost ..... Page 19
- a. Engineering Single Line Layout ..... Page 19
- b. Transmission & Substation Cost ..... Page 21

V. Adjustments to the VC Summer #2 Interconnection Plan ..... Page 22

Generator Interconnection System Impact Study
for
SCE&G V.C. Summer Nuclear #2

A Generator Interconnection System Impact Study is an extension of the previous Generation Interconnection Feasibility Study, and is a detailed study of the SCE&G transmission system considering the full output of the proposed new generation. The System Impact Study includes a full test of the NERC Reliability Standards Table 1 and the SCE&G Internal Transmission Planning Criteria.

General Discussion

The SCE&G Nuclear Group has applied for interconnection of a new 1375 MVA nuclear generator near the existing V.C. Summer site. This new generator would be jointly owed by SCE&G and Santee Cooper, SCE&G would own 55% and Santee Cooper would own the remaining 45%. In this study Santee Cooper's portion of the generator output was represented as delivered to the Santee Cooper system.

In addition to this Interconnection System Impact Study, SCE&G Transmission Planning participated in a joint study with Southern Company, Santee Cooper, Duke Energy and other interconnected transmission providers to evaluate the effect of this generator and other planned generators in the region. Results of this joint study indicated no unacceptable interaction between these planned generators or the identified associated transmission expansion.

In the future, SCE&G Transmission Planning will periodically review the results of this Interconnection System Impact Study to determine if the recommended expansion remains valid.

The previously completed Feasibility Study recommended the following transmission line improvements:

1. Construct a VC Summer #2-Killian 230kV line with B1272 conductor
    - (add 230kV terminal at Killian)
2. Construct a VC Summer #2-Lake Murray 230kV line with B1272 conductor
    - (add 230kV terminal at Lake Murray)
3. Construct a VC Summer #2-VC Summer (existing) Bus #2 230kV line with B1272 conductor
    - (add 230kV terminal at VC Summer #1 Bus #2)
4. Construct a VC Summer #2-VC Summer (existing) Bus #3 230kV line with B1272 conductor
    - (add 230kV terminal at VC Summer #1 Bus #3)
5. Upgrade the existing Denny Terrace-Lyles 230kV line to B1272
6. Upgrade the existing Parr-VC Summer #1 230kV line to B1272
7. Upgrade the existing Parr-VC Summer #2 230kV line to B1272
8. Add a 3rd 230/115kV 336 MVA auto transformer at Lake Murray
9. Add a 3rd 230/115kV 336 MVA auto transformer at Denny Terrace

10. Upgrade the existing Saluda-McMeekin 115kV line to B1272
11. Upgrade the existing Lake Murray-McMeekin 115kV line to B1272
12. Upgrade the existing Lake Murray-Saluda 115kV to with B1272

In addition, it will be necessary to construct a new 230kV generator substation at the proposed site using a breaker-and-a-half design with seven 230kV terminals.

1. One - for the generator step up transformer
2. One - for station service
3. One - for the new 230kV line to the existing V. C. Summer 230kV bus #2
4. One - for the new 230kV line to the existing V. C. Summer 230kV bus #3
5. One - for the new 230kV line to Lake Murray
6. One - for the new 230kV line to Killian
7. One - for the new 230kV line to Santee Cooper

A total of eleven 230kV breakers are needed at the new generator substation for this design.

To resolve overstressed conditions of several 230kV and 115kV breakers as described in the Short Circuit Analysis section, Transmission Planning recommends replacing the following breakers with higher interrupting capability breakers:

Location	Voltage	Breaker #
VC Summer	230	8722
VC Summer	230	8732
VC Summer	230	8742
VC Summer	230	8772
VC Summer	230	8792
VC Summer	230	8832
VC Summer	230	8842
VC Summer	230	8852
VC Summer	230	8892
VC Summer	230	8912
VC Summer	230	8942
Parr	230	6402
Parr	230	6412
Parr	230	6422
Parr	230	6432
Parr	230	6442
Saluda Hydro	115	562
McMeekin	115	1051
McMeekin	115	2051
Edenwood	115	2712
Edenwood	115	3672
Edenwood	115	3682
Denny Terrace	115	8032
Denny Terrace	115	8042
Denny Terrace	115	8092

The report will be presented as follows:

I. Generation Information
II. Transmission Studies
   A. Power Flow Analysis
   B. Short Circuit Analysis
   C. Stability Analysis
III. Required Interconnection Facilities
IV. Engineering Design & Cost

I. Generator Information

The generator design consists of a single nuclear unit and one step-up transformer. The generator unit will have a maximum gross MVA output capacity of 1,375 MVA and a maximum continuous net MW of 1,165 MW.

The generator design consists of the following information:

MVA – gross:	1375
MW – net:	1165
Power Factor:	between .90 and 1.05
Voltage:	22kV
Speed:	1800 rpm
X'd-sat.: 0.465 PU;	X''d-sat.: 0.325 PU
X2-sat.: 0.320 PU;	X0: 0.237 PU

II. Transmission Studies

A. Power Flow Analysis

Since the completion of the Generation Interconnection Feasibility Study, modifications were made to the 230kV generator substation layout and the arrangement of lines connecting to the existing V.C. Summer substation and the proposed V.C. Summer substation. These changes resulted in the proposed retirement of the Parr 230kV substation. The original improvements along with these proposed modifications were modeled and Transmission Planning has run more detailed power flow analysis of the SCE&G transmission system to include a full test of the NERC Reliability Standards Table 1 and the SCE&G Internal Transmission Planning Criteria. This analysis shows the following overload condition due to the additional generation:

Overloaded Facility	Emergency Rating (MVA)	Loading (%)	Contingency
Lake Murray-Lyles 115kV line	123	101	Outage of Denny Terrace 230kV Bus #1 and #2 (Category C-9)

Transmission Planning recommends that this contingency event be mitigated by installing a 2nd bus tie breaker at the Denny Terrace 230kV bus.

B. Short Circuit Analysis

The previously complete feasibility study indicated sixteen 230kV breakers and nine 115kV breakers were overstressed due to the additional generation at V. C. Summer and must be replaced. However, five of these 230kV breakers are at Parr 230kV substation and because of the proposed retirement of the Parr 230kV substation, these five breaker replacements are no longer required. Additionally, two 230kV breakers are eliminated at the VC Summer #1 Substation with the new line arrangement. Transmission Planning now recommends that nine 230kV breakers and nine 115kV breakers be replaced as listed in the recommendations section of this report.

C. Stability Analysis

1. Overview of Stability Analysis.
The stability study of the connection of the V.C. Summer #2 AP1000 generator to the SCE&G and SCPSA transmission systems assessed the ability of this generator to remain in synchronism following selected transmission system contingencies. Also reviewed were the adequacy of damping of generation/transmission oscillations and the impact of the proposed generator on the stability performance of other system generators. System voltage responses were examined for indications of voltage instability. In addition, generator frequency responses and the effects of protective system performance were evaluated.

For the system peak load cases, the nearby V.C. Summer #1 generator was simulated as switched off except for where noted as otherwise. In addition, the 230kV transmission line connecting the V.C. Summer #2 generator switchyard to SCPSA's Pomaria substation was switched out. These outages were simulated in order to account for the possibility that major generation and transmission could be out of service during the operation of the connecting facility. Power flow studies showed that these were the generation and transmission outages that resulted in the greatest impact on the reactive output of the V.C. Summer #2 generator.

Rotor angle responses of the V.C. Summer #2 generator were simulated in order to determine if angular instability could result from likely contingencies. Generator frequency deviations were examined in order to determine if generator frequency protection could result in generator tripping. The results of the loss of the V.C.

Summer #2 generator were examined in order to determine if any resulting underfrequency relay operations would lead to system load shedding. Finally, the effects of each contingency on the V.C. Summer #2 230kV switchyard bus were examined along with voltages at the existing V.C. Summer #1 230kV and 115kV Offsite Power Supply buses to determine if the voltage requirements of the Offsite Power Supply buses were violated. Generator response plots are not included but are available for review upon request.

An initial 30 second steady state simulation for the selected connection configuration was performed in order to establish that steady state conditions existed prior to fault conditions. The simulation of each contingency repeated the steady state condition for 1 second prior to introducing permanent fault conditions so that the responses could be compared to the initial steady state condition. In order to determine the effects on all system generators, contingencies were simulated under system peak load conditions and system valley load conditions.

Contingencies were selected in order to satisfy each of four categories as specified by NERC Reliability Standards TPL-001 through TPL-004. As a companion to this study, SCPSA has performed a study of this generator interconnection and has determined that the NERC Reliability Standards are satisfied for its system. An Executive Summary of the SCPSA study of generator rotor angle responses to contingencies on its system follows the results of the SCE&G stability analysis. Although not included in this report, a stability study of this interconnection was also performed for the VCS #2 & VCS #3 Combined Operating License Application (COLA). The results of that study support the findings of this Interconnection Study.

The results of the stability analysis are described in the following sections and are summarized following the detailed results.

2. Results of Peak Load Stability Analysis.

A.1. Steady state conditions (NERC Category A condition)

The interconnection of the V.C. Summer #2 generator was shown to result in system steady state conditions. Generator rotor angles and frequencies showed no deviations through out the 30 second simulation. The voltage at the V.C. Summer #2 bus remained at 232.3kV during the simulation. The voltages at the V.C. Summer #1 Offsite Power Supply buses were constant at 232.3kV and 117.75kV.

A.2. Normal clearing of a three phase fault on the V.C. Summer #2 generator terminal 26kV bus (NERC Category B-1 Contingency)

Following a 1 second steady state period, a permanent fault was simulated at the 26Kv side of the V.C. Summer #2 generator step up transformer. This results in the opening of the generator breaker 5 cycles after the appearance of the fault. Since the station service buses are normally served from the 26kV bus, this operation would result in the loss of the station service loads. However, the station fast transfer scheme switches these loads to the switchyard 230kV bus and allows the continued service of these loads.

Rotor angle oscillations were moderate and well damped with no indication of angular instability. There was no indication of voltage instability. Likewise, system

frequency responses were also moderate and well damped with no indication of system underfrequency load shedding or generator under/overfrequency operations.

During the application of the fault, the voltage at the V.C. Summer #2 bus dropped to 121.41kV. The V.C. Summer #1 230kV and 115kV Offsite Power Supply bus voltages dropped to 125.06kV and 78.98kV respectively. This allowed the degraded voltage and loss of voltage relay timers to initiate. However, the voltages recovered enough to reset the timers within 1 cycle of the clearing of the fault.

Steady state conditions were reestablished with no further system operations.

A.3. Delayed clearing of a single line to ground fault on the future V.C. Summer #2 switchyard to the existing V.C. Summer #1 generator switchyard bus #2 (NERC Category C-8 contingency)

Since this contingency places a fault near the existing V.C. Summer #1 generator, this unit was modeled as switched on. All local transmission lines were also modeled as in service. Following a 1 second steady state period, a permanent single phase-to-ground fault was simulated at the V.C. Summer #2 end of the V.C. Summer #2 – V.C. Summer #1 230kV transmission line #2. The circuit breaker at the V.C. Summer #1 end of the line was simulated as operating normally. The breaker and a half scheme at the V.C. Summer #2 switchyard cleared the fault following a fault duration of approximately 0.25 seconds.

During the application of the fault, the voltage at the V.C. Summer #2 bus dropped to 121.44kV. The V.C. Summer #1 230kV and 115kV Offsite Power Supply bus voltages dropped to 126.94kV and 71.20kV respectively. This allowed the degraded voltage and loss of voltage relay timers to initiate. However, the voltages recovered enough to reset the timers within 1 cycle of the clearing of the fault.

Rotor angle oscillations were moderate and were adequately damped with no indication of angular instability. There was no indication of voltage instability. Likewise, system frequency responses were also moderate and adequately damped with no indication of system underfrequency load shedding or generator under/overfrequency operations.

Steady state conditions were reestablished with no further system operations.

A.4. Normal clearing of a three phase fault on the existing V.C. Summer #1 generator switchyard bus #1 (NERC Category D-10 contingency)

Since this contingency places a fault near the existing V.C. Summer #1 generator, this unit was modeled as switched on. All local transmission lines were also modeled as in service. Following a 1 second steady state period, a permanent single three phase fault was simulated at the V.C. Summer #1 bus #1. Since this is the bus that the V.C. Summer #1 generator is connected to that generator was tripped when the fault was cleared. In addition, in order to prevent the Fairfield Pumped Storage generators from becoming unstable, a Special Protection System will need to be installed at the V.C. Summer #1 switchyard that will trip those units

as well. The operations to clear the fault and trip the generators will occur within 6 cycles from the appearance of the bus fault.

During the application of the fault, the voltage at the V.C. Summer #2 230kV bus dropped to 6.99kV. The V.C. Summer #1 230kV and 115kV Offsite Power Supply bus voltages dropped to 0.00kV and 21.79kV respectively. This allowed the degraded voltage and loss of voltage relay timers to initiate. However, the voltages recovered enough to reset the timers within 14-15 cycles following the appearance of the fault.

Rotor angle oscillations were moderate and were adequately damped with no indication of angular instability. There was no indication of voltage instability. Likewise, system frequency responses were also moderate and adequately damped with no indication of system underfrequency load shedding or generator under/overfrequency operations.

Steady state conditions were reestablished with no further system operations.

3. Results of Low Load Stability Analysis.

A.1. Steady state conditions (NERC Category A condition)

The interconnection of the V.C. Summer #2 generator was shown to result in system steady state conditions. Generator rotor angles and frequencies showed no deviations through out the 30 second simulation. The voltage at the V.C. Summer #2 bus remained at 232.3kV during the simulation. The voltages at the V.C. Summer #1 Offsite Power Supply buses were constant at 232.3kV and 116.84kV.

A.2. Normal clearing of a three phase fault on the V.C. Summer #2 generator terminal 26kV bus (NERC Category B-1 Contingency)

Following a 1 second steady state period, a permanent fault was simulated at the 26Kv side of the V.C. Summer #2 generator step up transformer. This results in the opening of the generator breaker 5 cycles after the appearance of the fault. Since the station service buses are normally served from the 26kV bus, this operation would result in the loss of the station service loads. However, the station fast transfer scheme switches these loads to the switchyard 230kV bus and allows the continued service of these loads.

Rotor angle oscillations were small but poorly damped due to the smaller level of synchronizing torque within the system due to the reduced amount of generation on line during system low load conditions. However, the generator rotor angle oscillations were eventually damped and there was no indication of angular instability. There was no indication of voltage instability. Likewise, system frequency responses were also small and poorly damped but with no indication of system underfrequency load shedding or generator under/overfrequency operations.

During the application of the fault, the voltage at the V.C. Summer #2 bus dropped to 133.47kV. The V.C. Summer #1 230kV and 115kV Offsite Power Supply bus voltages dropped to 136.00kV and 74.82kV respectively. This allowed the degraded

voltage and loss of voltage relay timers to initiate. However, the voltages recovered enough to reset the timers within 1 cycle of the clearing of the fault.

Steady state conditions were reestablished with no further system operations.

A.3. Delayed clearing of a single line to ground fault on the future V.C. Summer #2 switchyard to the existing V.C. Summer #1 generator switchyard bus #2 (NERC Category C-8 contingency)

Since this contingency places a fault near the existing V.C. Summer #1 generator, this unit was modeled as switched on. All local transmission lines were also modeled as in service. Following a 1 second steady state period, a permanent single phase-to-ground fault was simulated at the V.C. Summer #2 end of the V.C. Summer #2 – V.C. Summer #1 230kV transmission line #2. The circuit breaker at the V.C. Summer #1 end of the line was simulated as operating normally. The breaker and a half scheme at the V.C. Summer #2 switchyard cleared the fault following a fault duration of approximately 0.25 seconds.

During the application of the fault, the voltage at the V.C. Summer #2 bus dropped to 115.83kV. The V.C. Summer #1 230kV and 115kV Offsite Power Supply bus voltages dropped to 121.03kV and 67.65kV respectively. This allowed the degraded voltage and loss of voltage relay timers to initiate. The voltages recovered enough to reset the timers within 2-3 cycles of the clearing of the fault.

Rotor angle oscillations were small and were adequately damped with no indication of angular instability. There was no indication of voltage instability. Likewise, system frequency responses were also small and adequately damped with no indication of system underfrequency load shedding or generator under/overfrequency operations.

Steady state conditions were reestablished with no further system operations.

A.4. Normal clearing of a three phase fault on the existing V.C. Summer #1 generator switchyard bus #1 (NERC Category D-10 contingency)

Since this contingency places a fault near the existing V.C. Summer #1 generator, this unit was modeled as switched on. All local transmission lines were also modeled as in service. Following a 1 second steady state period, a permanent three phase fault was simulated at the V.C. Summer #1 bus #1. Since this is the bus that the V.C. Summer #1 generator is connected to, that generator was tripped when the fault was cleared. In addition, in order to prevent the Fairfield Pumped Storage generators from becoming unstable, a Special Protection System will need to be installed at the V.C. Summer #1 switchyard that will trip those units as well. The operations to clear the fault and trip the generators will occur within 6 cycles from the appearance of the bus fault.

During the application of the fault, the voltage at the V.C. Summer #2 230kV bus dropped to 5.89kV. The V.C. Summer #1 230kV and 115kV Offsite Power Supply bus voltages dropped to 0.00kV and 18.19kV respectively. This allowed the degraded voltage and loss of voltage relay timers to initiate. However, the voltages

recovered enough to reset the timers within 12-17 cycles of the appearance of the fault.

Rotor angle oscillations were moderate and were adequately damped with no indication of angular instability. There was no indication of voltage instability. Likewise, system frequency responses were also moderate and adequately damped with no indication of system underfrequency load shedding or generator under/overfrequency operations.

Steady state conditions were reestablished with no further system operations. The plots for this case are shown in

A.5. Three phase fault with normal clearing on the existing V.C. Summer #1 generator bus #2 to Fairfield Pumped Storage Generators # 5-8 (NERC Category D-11 contingency)

Since this contingency places a fault near the existing V.C. Summer #1 generator, this unit was modeled as switched on. All local transmission lines were also modeled as in service. Following a 1 second steady state period, a permanent three phase fault was simulated on the 230kV transmission line that connects the V.C. Summer #1 bus #2 to the Fairfield Pumped Storage units #5-8. When this line was opened these units which were operating in the pumping mode were taken off line. This represents the largest load that can be removed from the system as a result of a single event.

During the application of the fault, the voltage at the V.C. Summer #2 230kV bus dropped to 6.00kV. The V.C. Summer #1 230kV and 115kV Offsite Power Supply bus voltages dropped to 0.00kV and 18.40kV respectively. This allowed the degraded voltage and loss of voltage relay timers to initiate. The voltage recovery differed between the 230kV and 115kV Offsite Power Supply buses but was easily sufficient to allow all relay timers to reset to prevent the switching of the Engineered Safeguard Features buses from the Offsite Power Supply buses.

Rotor angle oscillations were moderate and were adequately damped with no indication of angular instability. Likewise, system frequency responses were also moderate and adequately damped with no indication of system underfrequency load shedding or generator under/overfrequency operations.

Steady state conditions were reestablished with no further system operations.

V.C. Summer #2 STABILITY STUDY RESULTS
Peak System Load Cases

A.1. Steady state conditions

A. Generator rotor angles demonstrate steady state condition.
B. There was no indication of voltage instability.
C. Generator frequencies show no deviation.
D. No negative impact on existing V.C. Summer #1 offsite power.
E. NERC Reliability Standard TPL-001 compliance demonstrated.

A.2. Three phase fault with normal clearing on the V.C. Summer #2 generator terminal 26kV bus

A. Moderate rotor angle oscillation for SCE&G generators with good damping and no indication of instability.
B. There was no indication of voltage instability.
C. Generator frequency responses are moderate and well damped with no system UFLS or generator under/over frequency operations.
D. No negative impact on existing V.C. Summer #1 offsite power.
E. NERC Reliability Standard TPL-002 compliance demonstrated.

A.3. Single line to ground fault with delayed clearing on the future V.C. Summer #2 switchyard to the existing V.C. Summer #1 generator switchyard bus #2

A. Moderate rotor angle oscillation for SCE&G generators with good damping and no system instability.
B. There was no indication of voltage instability.
C. Generator frequency responses are moderate and well damped with no system UFLS or generator under/over frequency operations.
D. No negative impact on existing V.C. Summer #1 offsite power.
E. NERC Reliability Standard TPL-003 compliance demonstrated.

A.4. Three phase fault with normal clearing on the existing V.C. Summer #1 generator bus #1

A. Moderate rotor angle oscillation for SCE&G generators with adequate damping, but Special Protection Scheme to trip Fairfield Pumped Storage generators is needed.
B. There was no indication of voltage instability.
C. Generator frequency responses are moderate and well damped with no system UFLS or generator under/over frequency operations.
D. Special Protection System to trip Fairfield Pumped Storage #1-8 required.
E. No negative impact on existing V.C. Summer #1 offsite power.
F. NERC Reliability Standard TPL-004 compliance demonstrated.

V.C. Summer #2 STABILITY STUDY RESULTS
System Low Load Cases

A.1. Steady state conditions

A. Generator rotor angles demonstrate steady state condition.
B. There was no indication of voltage instability.
C. Generator frequencies show no deviation.
D. No negative impact on existing V.C. Summer #1 offsite power.
E. NERC Reliability Standard TPL-001 compliance demonstrated.

A.2. Three phase fault with normal clearing on the V.C. Summer #2 generator terminal 26kV bus

A. Small rotor angle oscillation for SCE&G generators with poor but adequate damping.
B. There was no indication of voltage instability.
C. Generator frequency oscillations small with poor but adequate damping.
D. No negative impact on existing V.C. Summer #1 offsite power.
E. NERC Reliability Standard TPL-002 compliance demonstrated.

A.3. Single line to ground fault with delayed clearing on the future V.C. Summer #2 switchyard to the existing V.C. Summer #1 generator switchyard bus #2

A. Small rotor angle oscillation for SCE&G generators with adequate damping.
B. There was no indication of voltage instability.
C. Generator frequency oscillations also small with adequate damping.
D. NERC Reliability Standard TPL-003 compliance demonstrated.

A.4. Three phase fault with normal clearing on the existing V.C. Summer #1 generator bus #1

A. Moderate rotor angle oscillation for SCE&G generators with adequate damping.
B. There was no indication of voltage instability.
C. Generator frequency oscillations moderate and adequately damped.
D. Special Protection System to trip Fairfield Pumped Storage #1-8 required.
E. No negative impact on existing V.C. Summer #1 offsite power.
F. NERC Reliability Standard TPL-004 compliance demonstrated.

A.5. Three phase fault with normal clearing on the existing V.C. Summer #1 generator bus #2 to Fairfield Pumped Storage Generators #5-8

A. Moderate rotor angle oscillation for SCE&G generators with adequate damping.
B. There was no indication of voltage instability.
C. Generator frequency oscillations moderate and adequately damped.
D. No negative impact on existing V.C. Summer #1 offsite power.
E. NERC Reliability Standard TPL-004 compliance demonstrated.

3. SCPSA Executive Summary

Santee Cooper has completed a portion of a joint utility assessment evaluating the dynamic performance of the bulk transmission system performance with the addition of a proposed 1,165 MW generating unit at the existing V.C. Summer site. Assessments are based on Reliability Standards adopted by the North American Electric Reliability Corporation (NERC) used simulated contingency events of projected 2015 summer and light-load seasons.

This study assesses both the transient stability and dynamic stability under normal operation and for selected contingencies simulated within the Santee Cooper electric system. The study focuses on selected contingency events addressing each of the four contingency Categories defined by NERC Reliability Standards TPL-001 through TPL-004. Contingencies selected for inclusion in this study focus on assessing the impact of specific, proposed changes in the power system network configuration and operating scenario associated with the proposed 1,165 MW generating unit addition at the existing V.C. Summer site.

Study scenario contingencies are applied to dynamic simulation models representing projected summer peak and light-load system conditions for 2015. These models were developed with coordinated input from Santee Cooper, SCE&G, Southern Company, Duke and Progress Energy Carolinas. Since it is impractical to include all possible contingency scenarios in specific stability assessments, those contingency scenarios judged most likely to impact the stability of Santee Cooper facilities are incorporated in this evaluation of actual or proposed system changes. Contingency events evaluated and assessments of each simulation are detailed in Table 1. Selected plots for each scenario are included for each simulation under projected summer peak and light-load conditions.

Review and appraisal of each of the scenarios evaluated do not identify any performance issues within the Santee Cooper bulk transmission system resulting from the proposed additional generation at the V.C. Summer site. Each of the selected contingency scenarios from Categories A, B and C and D of NERC Planning Standard TPL-001 through 004, Table 1 indicates that the Santee Cooper system is expected to comply with the requirements outlined for these contingency categories in the projected representation of both the 2015 summer and light-load seasons.

Table 1
Contingency Simulations

Scenario #	NERC Category	Description	Findings
1	B-2	Newberry 230 kV to Pomaria 230 kV line has a fault next to Newbery 230 kV Switching 230 kV switching station. The line is opened and closed under normal breaker operation causing the fault to clear.	Both seasonal case scenarios exhibit good damping following the disturbance. Machine relative angles quickly return to pre-disturbance values without significant swings.
2	C-3	Newberry 230 kV to Greenwood County 230 kV line has a fault next to Newbery 230 kV Switching 230 kV switching station. The line is opened under normal breaker operation causing the fault to clear. This line is not closed. 5 seconds later the Newberry 230 kV to Pomaria 230 kV line has a fault next to Newbery 230 kV Switching 230 kV switching station. The line is opened and closed under normal breaker operation causing the fault to clear.	Both seasonal case scenarios exhibit good damping following both the 1st and 2nd disturbance. Machine relative angles quickly return to pre-disturbance values without significant swings during either of the disturbances.
3	C-5	Failure of common structure causes both Greenwood to Hodges 230 kV and Greenwood to Rainey 230 kV lines to have a single line to ground fault. Both lines are taking out of service by normal breaker operation resulting in the clearing of the fault.	Both scenarios exhibit good damping following the disturbance. The summer scenario indicates that machine relative angles quickly returning to pre-disturbance values with no significant swings following the disturbance. The light-load scenario shows machine relative angles quickly finding new steady states of operation with no significant swings.
4	C-7	A single line to ground fault on the Camden to Lugoff 230kv occurs near the Camden switching station. Due to slow breaker operation there is a delay in clearing the fault. The Camden to Lugoff 230 kV line is opening and then closed resulting in clearing the fault.	Both scenarios exhibit good damping following the disturbance. The machine relative angles quickly return to pre-disturbance values no significant swings.
5	D-3	Fault on line near Newberry 230 kV station is not cleared due to breaker failure. The station is then drop by secondary breaker protection.	Machine relative angles exhibit wider swings than those identified for the summer season, though both seasonal scenarios exhibit good damping following the disturbance.
6	D-4	Fault occurs on Pomaria 230 kV buss tie breaker resulting is delayed clearing of 230 kV lines and loss of Pomaria bus.	Results indicate that oscillations following the disturbance are well-damped for both seasonal scenarios.
7	D-5	Fault on Blythewood 230 to 69 kV transformer results in opening and closing of both VC Summer to Blythewood 230 kV and Blythewood to Lugoff 230k kV lines. Both Blythewood 230 to 69 kV transformers are tripped resulting in loss of 230 kV support to the Santee Cooper 69kV system.	Both scenarios exhibit good damping following the disturbance. The machine relative angles quickly return to pre-disturbance values no significant swings.

4. Stability Study Conclusions

This study demonstrates that the proposed V.C. Summer #2 generator interconnection to the SCE&G and SCPSA systems is compliant with NERC Reliability Standards. There was no indication of voltage instability. None of the simulations indicated that system UFLS or generator under/overfrequency operations would occur. Neither does the interconnection have a negative impact on the existing V.C. Summer #1 offsite power quality. Several cases with faults located near the V.C. Summer #1 and the Fairfield Pumped Storage units revealed a need for a Special Protection System that will trip the Fairfield units to prevent instability. The SCE&G Relay and SCADA Applications department has identified the operating features of such a scheme and will need to make the required system protection improvements.

III. Required Interconnection Facilities

The analyses performed in this study confirmed the results of the Feasibility Study and show that constructing two new 230kV lines from the VC Summer site to the Columbia Area load center, plus additional transmission improvements described below, are required to reliably transmit the 1,165 MW of the proposed VC Summer #2 generator from of the VC Summer area to the remainder of the SCE&G system. Also, the analyses show that constructing two new 230kV lines is less costly and more effective than upgrading the numerous existing 230kV transmission facilities that currently transmit power from the VC Summer area.

The required transmission improvements:

1. Construct a VC Summer #1 bus #1 - Killian 230kV line with B1272 conductor. (add 230kV terminal at Killian)
2. Construct a VC Summer #2 - Lake Murray 230kV line with B1272 conductor. (add 230kV terminal at Lake Murray)
3. Construct a VC Summer #2 - VC Summer #1 bus #2 230kV line with B1272 conductor. (add 230kV terminal at VC Summer #1 bus #2)
4. Construct a VC Summer #2 - VC Summer #1 bus #3 230kV line with B1272 conductor. (add 230kV terminal at VC Summer #1 bus #3)
5. Upgrade the existing Denny Terrace-Lyles 230kV line to B1272
6. Add a 3rd 230/115kV 336 MVA auto transformer at Lake Murray
7. Add a 3rd 230/115kV 336 MVA auto transformer at Denny Terrace
8. Upgrade the existing Saluda-McMeekin 115kV line to B1272
9. Upgrade the existing Lake Murray-McMeekin 115kV line to B1272
10. Upgrade the existing Lake Murray-Saluda 115kV to with B1272
11. Add a second 230kV bus tie breaker at Denny Terrace

Construct a new 230kV generator substation at the proposed site using a breaker-and-a-half design with ten 230kV terminals. To minimize the number of line crossings and to retire the Parr 230kV substation, several existing lines are being re-terminated at the VC Summer #2 substation and some of the new required lines are terminating at the VC Summer #1 substation.

1. VC Summer #2 generator step up transformer
2. VC Summer #2 station service
3. New 230kV line to VC Summer #1 bus #2
4. New 230kV line to VC Summer #1 bus #3
5. New 230kV line to Lake Murray
6. Re-terminate existing 230kV line to Lake Murray
7. Re-terminate existing 230kV line to Bush River (Duke)
8. Re-terminate existing 230kV line to Graniteville
9. Re-terminate existing 230kV line to Denny Terrace
10. Re-terminate existing 230kV line to Newberry (Santee)

A total of eighteen 230kV breakers are needed at the new generator substation for this design.

To resolve overstressed conditions of several 230kV and 115kV breakers as described in the Short Circuit Analysis section, the following breakers must be replaced with higher interrupting capability breakers:

Location	Voltage	Breaker #
VC Summer	230	8722
VC Summer	230	8772
VC Summer	230	8792
VC Summer	230	8832
VC Summer	230	8842
VC Summer	230	8852
VC Summer	230	8892
VC Summer	230	8912
VC Summer	230	8942
Saluda Hydro	115	562
McMeekin	115	1051
McMeekin	115	2051
Edenwood	115	2712
Edenwood	115	3672
Edenwood	115	3682
Denny Terrace	115	8032
Denny Terrace	115	8042
Denny Terrace	115	8092

As stated in the stability analysis section, several cases with faults located near the V.C. Summer #1 and the Fairfield Pumped Storage units revealed a need for a Special Protection System that will trip the Fairfield units to prevent instability. The SCE&G Relay and SCADA Applications department has identified the operating features of such a scheme and will need to make the required system protection improvements.

IV. Engineering Design & Cost

A. Engineering Single line Layout & Substation Arrangement

Transmission Single Line

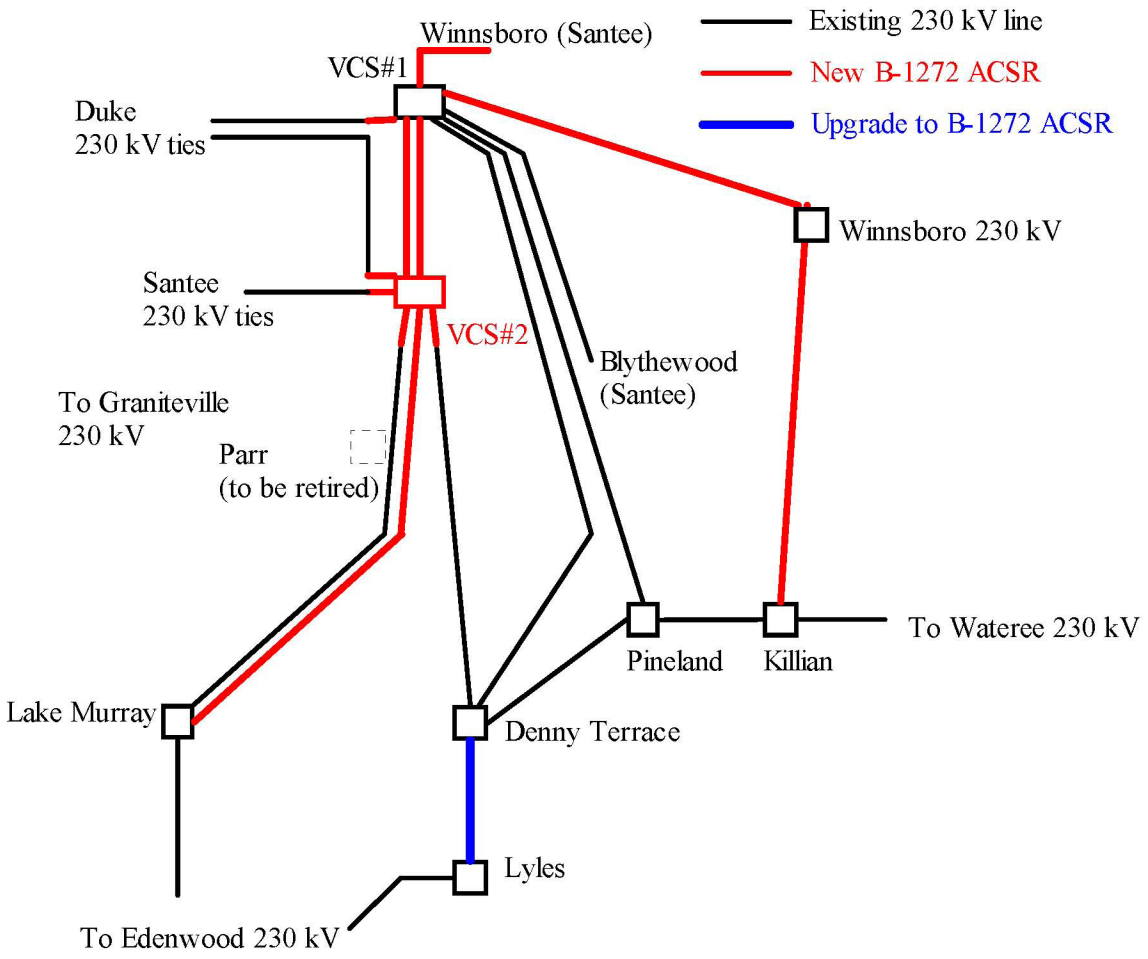

Substation Arrangement

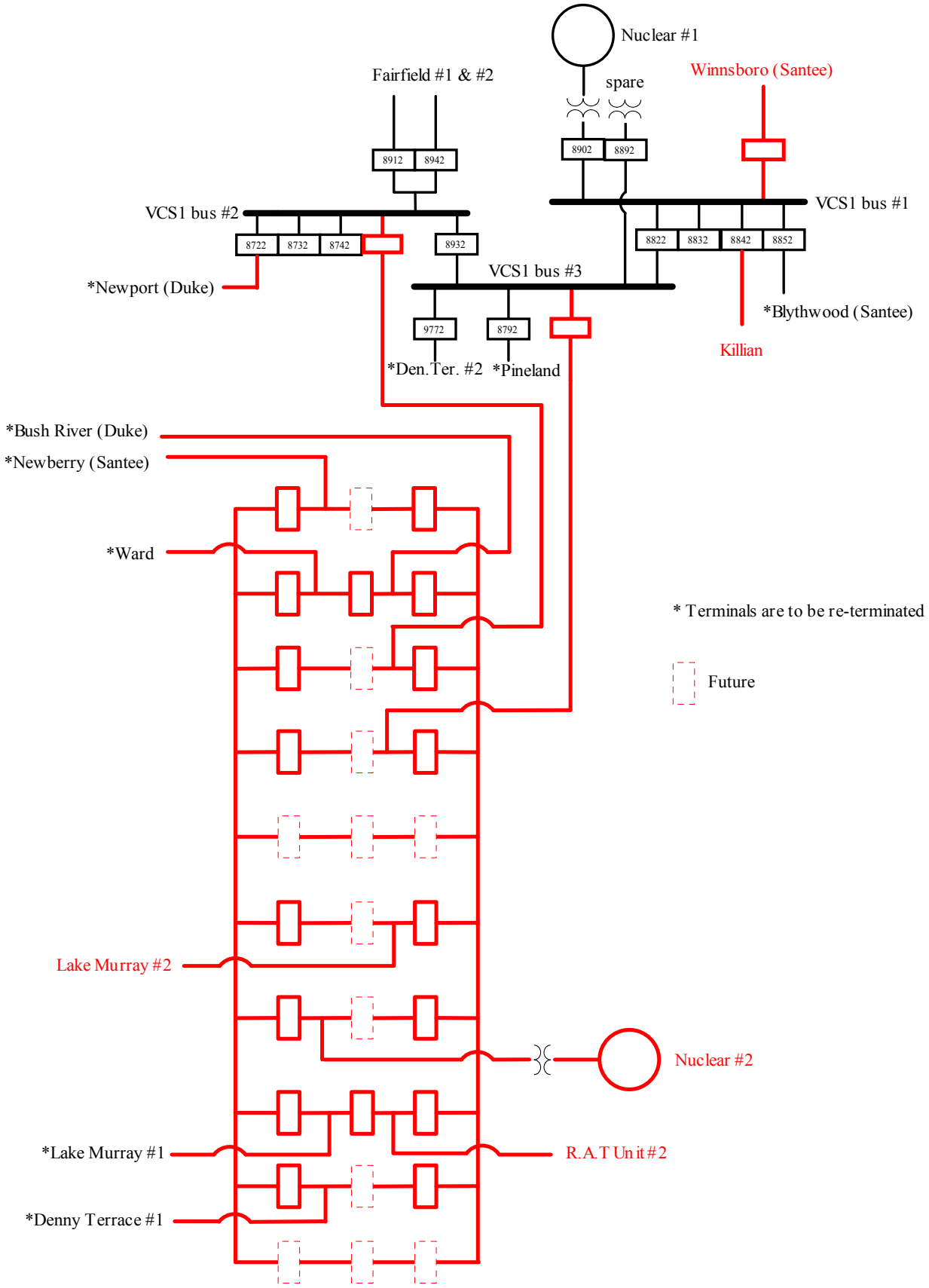

B. Transmission & Substation Cost

All cost estimates are in 2006 dollars.

1. Construct VC Summer-Killian 230kV 25,000,000
   - (add 230kV terminal at Killian).....600,000
2. Construct VC Summer-Lake Murray 230kV.....17,000,000
   - (add 230kV terminal at Lake Murray) 600,000
3. Construct VC Summer #2-VC Summer #1 bus #2 600,000
   - (add 230kV terminal at VC Summer #1 bus #2) 600,000
4. Construct VC Summer #2-VC Summer #1 bus #3 600,000
   - (add 230kV terminal at VC Summer #1 bus #3) 600,000
5. Upgrade existing Denny Terrace-Lyles 230kV 1,500,000
6. Add a 3rd 230/115kV 336 MVA auto transformer at Lake Murray 5,000,000
7. Add a 3rd 230/115kV 336 MVA auto transformer at Denny Terrace 8,000,000
8. Upgrade existing Saluda-McMeekin 115kV line 125,000
9. Upgrade existing Lake Murray-McMeekin 115kV line.....500,000
10. Upgrade existing Lake Murray-Saluda 115kV 450,000
11. Add second 230kV bus tie breaker at Denny Terrace 500,000

Construct a new 230kV generator substation at the proposed site using a breaker-and-a-half design with ten 230kV terminals 12,589,000

Construct Transmission from VC Summer #2 Generator to VC Summer #2 Switchyard.....340,000

Re-terminate VC Summer area lines to the VC Summer #2 Substation 1,271,000

1. Re-terminate Bush River (Duke) 230kV line to VC Summer #2 substation
2. Re- terminate Newberry (SCPSA) 230kV line to VC Summer #2 substation (paid by SCPSA)
3. Re-terminate Ward 230kV line to VC Summer #2 substation
4. Re-terminate Lake Murray 230kV #1 line to VC Summer #2 substation
5. Re-terminate Denny Terrace 230kV #1 line to VC Summer #2 substation

Re-terminate VC Summer area lines to the VC Summer #1 Substation 681,000

1. Re-terminate Blythewood (SCPSA) 230kV line to VCS bus #1 (paid by SCPSA)
2. Re-terminate Pineland 230kV line to VCS bus #3
3. Re-terminate Denny Terrace 230kV line #2 to VCS bus #3
4. Re-terminate Newport (Duke) 230kV line to VCS bus #2

Replace overstressed
1. 230kV breakers - 9 4,500,000
2. 115kV breakers - 9 2,700,000

Total Cost Estimate.....$83,756,000

V. Adjustments to the VC Summer #2 Interconnection Plan

SCE&G Transmission Planning is adjusting the VC Summer #2 generator interconnection plan to consider future native load needs of the system. The existing system has limited capability to serve future load growth along the Interstate 77 corridor. Without reactive compensation, the system can serve only an additional 40 MW of customer load. With reactive compensation, 81 MW can be served.

Transmission Planning is expecting the load along I-77 to grow rapidly in the future, exceed the additional 81 MW amount and, at that time, the area will need additional transmission expansion to reliably serve the growing load.

Transmission Planning is recommending that the VC Summer – Killian 230kV transmission line, discussed above in this report, be routed from VC Summer to Winnsboro and then to Killian. This will extend the 230kV line but with relatively little additional cost this will also provide for service along the I-77 corridor for many years into the future.

Generator Interconnection System Impact Study for SCE&G V.C. Summer Nuclear #3

Prepared for:
SCE&G Nuclear Group

August 31, 2007

Prepared by:
SCE&G Transmission Planning

TABLE OF CONTENTS

General Discussion..... Page 3

I. Generator Information ..... Page 5

II. Transmission Studies..... Page 5
- a. Power Flow Analysis ..... Page 5
- b. Short Circuit Analysis ..... Page 7
- c. Stability Analysis ..... Page 7

III. Required Interconnection Facilities ..... Page 17

IV. Engineering Design & Cost ..... Page 19
- a. Engineering Single Line Layout..... Page 19
- b. Transmission & Substation Cost..... Page 22

Generator Interconnection System Impact Study
for
SCE&G V.C. Summer Nuclear #3

A Generator Interconnection System Impact Study is an extension of the previous Generation Interconnection Feasibility Study, and is a detailed study of the SCE&G transmission system considering the full output of the proposed new generation. The System Impact Study includes a full test of the NERC Reliability Standards Table 1 and the SCE&G Internal Transmission Planning Criteria.

General Discussion

The SCE&G Nuclear Group has applied for interconnection of an additional 1375 MVA nuclear generator near the existing V.C. Summer site. This new generator would be jointly owed by SCE&G and Santee Cooper, SCE&G would own 55% and Santee Cooper would own the remaining 45%. In this study Santee Cooper's portion of the generator output was represented as delivered to the Santee Cooper system.

In the future, SCE&G Transmission Planning will periodically review the results of this Interconnection System Impact Study to determine if the recommended expansion remains valid.

The previously completed Feasibility Study recommended the following transmission line improvements:

1. Construct VCS New-St George 230kV Double Circuit B1272 line (135 miles)
   (Add two 230kV terminals at VC Summer New using breaker-and-a-half design)

2. Construct VCS New-VCS#1, Bus #1 230kV line
   (Add one 230kV terminal at existing VC Summer Bus #1)
   (Add one 230kV terminal at VC Summer New using breaker-and-a-half design)

3. Establish a St George 230kV Switching Station using breaker-and-a-half design
   (6 terminals - 9 breakers)
   (Add land)

4. Fold-in the Canadys-Santee 230kV line at St George 230kV

5. Upgrade the Canadys-St George 230kV line to B1272
   (Upgrade Canadys terminal)

6. Fold-in the Wateree-Summerville 230kV line at St George 230kV

7. Upgrade the St George-Summerville 230kV line to B1272

(Upgrade Summerville terminal)

8. Upgrade Saluda-Georgia Pacific 115kV Double Circuit line to 1272
(Upgrade Saluda terminal)

Add five (5) terminals (9 breakers) to the VC Summer New substation using breaker-and-a-half design.

1. One - for VC Summer #3 generator step up transformer
2. One - for VC Summer #3 station service
3. One - for the new 230kV line to the existing VC Summer #1 230kV bus #1
4. Two - for the 2 new 230kV lines to St George

To resolve overstressed conditions of the breakers as described in the Short Circuit Analysis section, Transmission Planning recommends replacing the following breakers with higher interrupting capability breakers:

Location	Voltage	Breaker #
VC Summer	230	8822
VC Summer	230	8932
VC Summer	230	8902
Lyles	115	732
Edenwood	115	3052
Dunbar	115	1112
A.M. Williams	115	5712
St. George	115	5002
St. George	115	5022
St. George	115	5052
St. George	115	5082

I. Generator Information

The generator design consists of a single nuclear unit and one step-up transformer. The generator unit will have a maximum gross MVA output capacity of 1,375 MVA and a maximum continuous net MW of 1,165 MW.

The generator design consists of the following information:

MVA – gross:	1375
MW – net:	1165
Power Factor:	between .90 and 1.05
Voltage:	26kV
Speed:	1800 rpm
X'd-sat.: 0.397 PU;	X''d-sat.: 0.261 PU
X2-sat.: 0.261 PU;	X0: 0.176 PU

II. Transmission Studies

A. Power Flow Analysis

Since the completion of the Generation Interconnection Feasibility Study, modifications were made to the 230kV generator substation layout and the arrangement of lines connecting to the existing V.C. Summer substation and the proposed V.C. Summer substation. These changes resulted in the proposed retirement of the Parr 230kV substation. The original improvements along with these proposed modifications were modeled and Transmission Planning has run more detailed power flow analysis of the SCE&G transmission system to include a full test of the NERC Reliability Standards Table 1 and the SCE&G Internal Transmission Planning Criteria.

Three different projected loading conditions were simulated for the 2019 time period: Summer Peak Load, Shoulder Load (75% of peak) and Light Load (38% of peak).

For the Summer Peak Load and Shoulder Load simulations, the analysis identified no additional overload conditions due to the additional generation that had not already been previously identified in the Feasibility Study. However, for the Light Load simulation, the following new conditions occurred:

In the basecase, with no outages, the VC Summer-Newport (Duke) 230kV line loads to 98% of its continuous rating of 437 MVA.

The n-2 analyses show the following overload conditions due to the additional generation:

Overloaded Facility	Rating (MVA)	Loading (%)	Contingency(s)
VC Summer #1 bus #2-Newport (Duke) 230kV line	456	104	VC Summer #1 bus #1-Winnsboro (Santee Cooper) 230kV line and VC Summer #1 bus #1-Blythewood (Santee Cooper) 230kV line
VC Summer #1 bus #2-Newport (Duke) 230kV line	456	104	VC Summer New-Pomaria (Santee Cooper) 230kV line #1 and VC Summer New-Pomaria (Santee Cooper) 230kV line #2
VC Summer #1 bus #2-Newport (Duke) 230kV line	456	103	VC Summer New-Bush River (Duke) 230kV line and VC Summer #1 bus #1-Blythewood (Santee Cooper) 230kV line
VC Summer #1 bus #2-Newport (Duke) 230kV line	456	103	VC Summer New-Bush River (Duke) 230kV line and VC Summer #1 bus #1-Winnsboro (Santee Cooper) 230kV line
VC Summer #1 bus #2-Newport (Duke) 230kV line	456	101	VC Summer New-Bush River (Duke) 230kV line and VC Summer New-Ward 230kV line
VC Summer #1 bus #2-Newport (Duke) 230kV line	456	101	VC Summer New-Bush River (Duke) 230kV line and VC Summer New-St George 230kV line

The installation of a series reactor on the VC Summer #1-Newport (Duke) 230kV line will reduce the current flow on the line and eliminate these conditions.

B. Short Circuit Analysis

The previously completed feasibility study indicated three 230kV breakers and eight 115kV breakers were overstressed due to the additional generation at V. C. Summer and must be replaced. This analysis identified no overstressed breakers due to the additional generation that had not already been previously identified in the Feasibility study.

The addition of the VC Summer #3 unit will increase the fault current in the VC Summer area to the point where 80kA breakers will be approaching the point of becoming overstressed. As the fault current capability of the interconnected transmission system increases in the future, this will require breakers with larger interrupting capability.

C. Stability Analysis

1. Overview of Stability Analysis.

The stability study of the connection of the V.C. Summer #3 AP1000 generator to the SCE&G transmission system assessed the ability of this generator to remain in synchronism following selected transmission system contingencies. Also reviewed were the adequacy of damping of generation/transmission oscillations and the impact of the proposed generator on the stability performance of other system generators. System voltage responses were examined for indications of voltage instability. In addition, generator frequency responses and the effects of protective system performance were evaluated.

For the system peak load cases, the adjacent V.C. Summer #2 generator was simulated as switched off except for where noted as otherwise. In addition, the 230kV transmission line connecting the V.C. Summer #3 generator switchyard to SCE&G'S Denny Terrace substation was switched out. These outages were simulated in order to account for the possibility that major generation and transmission could be out of service during the operation of the connecting facility. Power flow studies showed that these were the generation and transmission outages that resulted in the greatest impact on the reactive output of the V.C. Summer #3 generator.

Rotor angle responses of the V.C. Summer #3 generator were simulated in order to determine if angular instability could result from likely contingencies. Generator frequency deviations were examined in order to determine if generator frequency protection could result in generator tripping. The results of the loss of the V.C. Summer #3 generator were examined in order to determine if any resulting underfrequency relay operations would lead to system load shedding. Finally, the effects of each contingency on the V.C. Summer #2 & #3 230kV switchyard bus were examined along with voltages at the existing V.C. Summer #1 230kV and 115kV Offsite Power Supply buses to determine if the voltage requirements of the Offsite Power Supply buses were violated. Generator response plots are not included but are available for review upon request.

An initial 30 second steady state simulation for the selected connection configuration was performed in order to establish that steady state conditions existed prior to fault conditions. The simulation of each contingency repeated the steady state condition for 1 second prior to introducing permanent fault conditions so that the responses could be compared to the initial steady state condition. In order to determine the effects on all system generators, contingencies were simulated under system peak load conditions and system valley load conditions.

Contingencies were selected in order to satisfy each of four categories as specified by NERC Reliability Standards TPL-001 through TPL-004. Although not included in this report, a stability study of this interconnection was also performed for the VCS #2 & VCS #3 Combined Operating License Application (COLA). The results of that study support the findings of this Interconnection Study.

The results of the stability analysis are described in the following sections and are summarized following the detailed results.

2. Results of Peak Load Stability Analysis.

A.1. Steady state conditions (NERC Category A condition)

The interconnection of the V.C. Summer #3 generator was shown to result in system steady state conditions. Generator rotor angles and frequencies showed no significant deviations through out the 30 second simulation. The voltage at the V.C. Summer #3 bus remained at 232.38kV during the simulation. The voltages at the 230kV and 115kV V.C. Summer #1 Offsite Power Supply buses were constant at 232.30kV and 117.65kV.

A.2. Normal clearing of a three phase fault on the V.C. Summer #2 generator terminal 26kV bus (NERC Category B-1 Contingency)

Following a 1 second steady state period, a permanent fault was simulated at the 26Kv side of the V.C. Summer #3 generator step up transformer. This results in the opening of the generator breaker 5 cycles after the appearance of the fault. Since the station service buses are normally served from the 26kV bus, this operation would result in the loss of the station service loads. However, the station fast transfer scheme switches these loads to the switchyard 230kV bus and allows the continued service of these loads.

Rotor angle oscillations were moderate and well damped with no indication of angular instability. There was no indication of voltage instability. Likewise, system frequency responses were also moderate and well damped with no indication of system underfrequency load shedding or generator under/overfrequency operations.

During the application of the fault, the voltage at the V.C. Summer #3 230Kv bus dropped to 119.42kV. The V.C. Summer #1 230kV and 115kV Offsite Power Supply bus voltages dropped to 121.436kV and 77.27kV respectively. This allowed the degraded voltage and loss of voltage relay

timers to initiate. However, the voltages recovered enough to reset the timers within 1 cycle of the clearing of the fault.

Steady state conditions were reestablished with no further system operations.

A.3. Delayed clearing of a single line to ground fault on the future V.C. Summer #2 & #3 switchyard to the existing V.C. Summer #1 generator switchyard bus #1 (NERC Category C-8 contingency)

Since this contingency places a fault near the existing V.C. Summer #1 generator and both future VCS #2 & #3 generators, these units were modeled as switched on. All local transmission lines were also modeled as in service. Following a 1 second steady state period, a permanent single phase-to-ground fault was simulated at the V.C. Summer #2 & #3 end of the V.C. Summer #2 & #3 – V.C. Summer #1 230kV transmission line #1. The circuit breaker at the V.C. Summer #1 end of the line was simulated as operating normally. The breaker and a half scheme at the V.C. Summer #2 & #3 switchyard cleared the fault following a fault duration of approximately 0.25 seconds.

During the application of the fault, the voltage at the V.C. Summer #2 & #3 bus dropped to 107.12kV. The V.C. Summer #1 230kV and 115kV Offsite Power Supply bus voltages dropped to 109.64kV and 62.11kV respectively. This allowed the degraded voltage and loss of voltage relay timers to initiate. The voltages did not recover in time to reset the loss of voltage relay timers within the required 0.24 seconds of the appearance of the fault. Consequently, both the 230kV and the 115kV loss of voltage relays will operate, resulting in a loss of offsite power and switching of the Engineered Safeguard Features 7.2kV buses to the diesel generators. This operation is not caused by the VCS #3 generator since any nearby fault with delayed clearing will depress the VCS#1 230kV switchyard and local 115kV transmission system voltages for a longer period of time than the VCS #1 loss of voltage relay timers are set for.

Rotor angle oscillations for local generators were pronounced but were adequately damped with no indication of angular instability. There was no indication of voltage instability. Likewise, system frequency responses were also moderate and adequately damped with no indication of system underfrequency load shedding or generator under/overfrequency operations.

Steady state conditions were reestablished with no further system operations.

A.4. Normal clearing of a three phase fault on the existing V.C. Summer #1 generator switchyard bus #1 (NERC Category D-10 contingency)

Following a 1 second steady state period, a permanent single three phase fault was simulated at the V.C. Summer #1 bus #1. Since this is the bus that the V.C. Summer #1 generator is connected to that generator was tripped when the fault was cleared. In addition, in order to prevent the Fairfield Pumped Storage generators from becoming unstable, a Special Protection System that was identified as needed when V.C. Summer #2 goes into service will need to be installed at the V.C. Summer #1 switchyard in order to trip those units as well. The operations to clear the fault and trip the generators will occur within 6 cycles from the appearance of the bus fault.

During the application of the fault, the voltage at the V.C. Summer #3 230kV bus dropped to 5.51kV. The V.C. Summer #1 230kV and 115kV Offsite Power Supply bus voltages dropped to 0.00kV and 34.47kV respectively. This allowed the degraded voltage and loss of voltage relay timers to initiate. However, the voltages recovered enough to reset the timers within 9 cycles following the appearance of the fault.

Rotor angle oscillations were moderate and were adequately damped with no indication of angular instability. There was no indication of voltage instability. Likewise, system frequency responses were also moderate and adequately damped with no indication of system underfrequency load shedding or generator under/overfrequency operations.

Steady state conditions were reestablished with no further system operations.

3. Results of Light Load Stability Analysis.

A.1. Steady state conditions (NERC Category A condition)

The interconnection of the V.C. Summer #3 generator was shown to result in system steady state conditions. Generator rotor angles and frequencies showed no significant deviations through out the 30 second simulation. The voltage at the V.C. Summer #3 bus remained at 232.30kV during the simulation. The voltages at the 230kV and 115kV V.C. Summer #1 Offsite Power Supply buses were constant at 232.30kV and 117.88kV.

A.2. Normal clearing of a three phase fault on the V.C. Summer #3 generator terminal 26kV bus (NERC Category B-1 Contingency)

Following a 1 second steady state period, a permanent fault was simulated at the 26Kv side of the V.C. Summer #3 generator step up transformer. This results in the opening of the generator breaker 5 cycles after the appearance of the fault. Since the station service buses are normally served from the 26kV bus, this operation would result in the loss of the station service loads. However, the station fast transfer scheme switches these loads to the switchyard 230kV bus and allows the continued service of these loads.

Rotor angle oscillations were small but poorly damped due to the smaller level of synchronizing torque within the system due to the reduced amount of generation on line during system low load conditions. However, the generator rotor angle oscillations were eventually damped and there was no indication of angular instability. There was no indication of voltage instability. Likewise, system frequency responses were also small and poorly damped but with no indication of system underfrequency load shedding or generator under/overfrequency operations.

During the application of the fault, the voltage at the V.C. Summer #3 bus dropped to 125.70kV. The V.C. Summer #1 230kV and 115kV Offsite Power Supply bus voltages dropped to 127.60kV and 72.95kV respectively. This allowed the degraded voltage and loss of voltage relay timers to initiate. However, the voltages recovered enough to reset the timers within 1 cycle of the clearing of the fault.

Steady state conditions were reestablished with no further system operations.

A.3. Delayed clearing of a single line to ground fault on the future V.C. Summer #2 & #3 switchyard to the existing V.C. Summer #1 generator switchyard bus #2 (NERC Category C-8 contingency)

Following a 1 second steady state period, a permanent single phase-to-ground fault was simulated at the V.C. Summer #2 & #3 end of the V.C. Summer #2 & #3 – V.C. Summer #1 230kV transmission line #1. The circuit breaker at the V.C. Summer #1 end of the line was simulated as operating normally. The breaker and a half scheme at the V.C. Summer #2 & #3 switchyard cleared the fault following a fault duration of approximately 0.25 seconds.

During the application of the fault, the voltage at the V.C. Summer #2 & #3 bus dropped to 98.93kV. The V.C. Summer #1 230kV and 115kV Offsite Power Supply bus voltages dropped to 101.03kV and 60.79kV respectively. This allowed the degraded voltage and loss of voltage relay timers to initiate. The voltages did not recover in time to reset the loss of voltage relay timers within the required 0.24 seconds of the appearance of the fault. Consequently, both the 230kV and the 115kV loss of voltage relays will operate, resulting in a loss of offsite power and switching of the Engineered Safeguard Features 7.2kV buses to the diesel generators. This operation is not caused by the VCS #3 generator since any nearby fault with delayed clearing will depress the VCS #1 230kV switchyard and local 115kV transmission system voltages for a longer period of time than the VCS #1 loss of voltage relay timers are set for.

Rotor angle oscillations were large and were poorly damped due to the reduced generation during light load conditions and the resulting reduction in system synchronizing torque. An extended simulation showed that the generator rotor angle oscillations were eventually damped and there was no indication of angular instability. There was no indication of voltage

instability. Likewise, system frequency responses were also moderate and adequately damped with no indication of system underfrequency load shedding or generator under/overfrequency operations.

Steady state conditions were reestablished with no further system operations.

A.4. Normal clearing of a three phase fault on the existing V.C. Summer #1 generator switchyard bus #1 (NERC Category D-10 contingency)

Following a 1 second steady state period, a permanent three phase fault was simulated at the V.C. Summer #1 bus #1. Since this is the bus that the V.C. Summer #1 generator is connected to, that generator was tripped when the fault was cleared. In addition, in order to prevent the Fairfield Pumped Storage generators from becoming unstable, a Special Protection System that was identified as needed when V.C. Summer #2 goes into service will need to be installed at the V.C. Summer #1 switchyard in order to trip those units as well. The operations to clear the fault and trip the generators will occur within 6 cycles from the appearance of the bus fault.

During the application of the fault, the voltage at the V.C. Summer #2 230kV bus dropped to 5.84kV. The V.C. Summer #1 230kV and 115kV Offsite Power Supply bus voltages dropped to 0.00kV and 19.93kV respectively. This allowed the degraded voltage and loss of voltage relay timers to initiate. However, the voltages recovered enough to reset the loss of voltage relay timers within 13-14 cycles of the appearance of the fault. The voltage recovery allowed the degraded voltage relay timers to reset within 29-32 cycles following the fault.

Rotor angle oscillations were moderate and were adequately damped with no indication of angular instability. There was no indication of voltage instability. Likewise, system frequency responses were also moderate and adequately damped with no indication of system underfrequency load shedding or generator under/overfrequency operations.

Steady state conditions were reestablished with no further system operations. The plots for this case are shown in

A.5. Three phase fault with normal clearing on the existing V.C. Summer #1 generator bus #2 to Fairfield Pumped Storage Generators # 5-8 (NERC Category D-11 contingency)

Following a 1 second steady state period, a permanent three phase fault was simulated on the 230kV transmission line that connects the V.C. Summer #1 bus #2 to the Fairfield Pumped Storage units #5-8. When this line was opened these units which were operating in the pumping mode were taken off line. This represents the loss of a large load removed from the system as a result of a single event.

During the application of the fault, the voltage at the V.C. Summer #2 230kV bus dropped to 5.97kV. The V.C. Summer #1 230kV and 115kV Offsite Power Supply bus voltages dropped to 0.00kV and 20.21kV respectively. This allowed the degraded voltage and loss of voltage relay timers to initiate. The voltage recovery differed between the 230kV and 115kV Offsite Power Supply buses but was sufficient to allow all relay timers to reset to prevent the switching of the Engineered Safeguard Features buses from the Offsite Power Supply buses. Transmission system voltages showed poorly damped oscillations with a return to steady state conditions during an extended 60 second simulation.

Rotor angle oscillations were moderate but poorly damped during the 30 second simulation due to the reduced system synchronizing torque during reduced system load conditions. However, an extended simulation to 60 seconds demonstrated an eventual return to steady state conditions. Switching the power system stabilizer at V.C. Summer #3 did not noticeably degrade the rotor angle damping. There was no indication of angular instability. Likewise, system frequency responses were also poorly damped but with no indication of system underfrequency load shedding or generator under/overfrequency operations.

Steady state conditions were reestablished with no further system operations.

V.C. Summer #3 STABILITY STUDY RESULTS
Peak System Load Cases

A.1. Steady state conditions
- A. Generator rotor angles demonstrate steady state condition.
- B. There was no indication of voltage instability.
- C. Generator frequencies show no deviation.
- D. No negative impact on existing V.C. Summer #1 offsite power.
- E. NERC Reliability Standard TPL-001 compliance demonstrated.

A.2. Three phase fault with normal clearing on the V.C. Summer #3 generator terminal 26kV bus
- A. Moderate rotor angle oscillation for system generators with good damping and no indication of instability.
- B. There was no indication of voltage instability.
- C. Generator frequency responses are moderate and well damped with no system UFLS or generator under/over frequency operations.
- D. No negative impact on existing V.C. Summer #1 offsite power.
- E. NERC Reliability Standard TPL-002 compliance demonstrated.

A.3. Single line to ground fault with delayed clearing on the future V.C. Summer #3 switchyard to the existing V.C. Summer #1 generator switchyard bus #2
- A. Pronounced rotor angle oscillation for local generators with good damping and no system instability.
- B. There was no indication of voltage instability.
- C. Generator frequency responses are moderate and well damped with no system UFLS or generator under/over frequency operations.
- D. Loss of offsite power to V.C. Summer #1 Engineered Safeguard Features 7.2kV buses not due to V.C. Summer #3 generator.
- E. NERC Reliability Standard TPL-003 compliance demonstrated.

A.4. Three phase fault with normal clearing on the existing V.C. Summer #1 generator bus #1
- A. Moderate rotor angle oscillation for system generators with adequate damping.
- B. There was no indication of voltage instability.
- C. Generator frequency responses are moderate and well damped with no system UFLS or generator under/over frequency operations.
- D. Special Protection System to trip Fairfield Pumped Storage #1-8 required as previously identified for V.C. Summer #2 generator.
- E. No negative impact on existing V.C. Summer #1 offsite power.
- F. NERC Reliability Standard TPL-004 compliance demonstrated.

V.C. Summer #3 STABILITY STUDY RESULTS
System Light Load Cases

A.1. Steady state conditions
- A. Generator rotor angles demonstrate steady state condition.
- B. There was no indication of voltage instability.
- C. Generator frequencies show no deviation.
- D. No negative impact on existing V.C. Summer #1 offsite power.
- E. NERC Reliability Standard TPL-001 compliance demonstrated.

A.2. Three phase fault with normal clearing on the V.C. Summer #3 generator terminal 26kV bus
- A. Small rotor angle oscillation for system generators with poor but adequate damping.
- B. There was no indication of voltage instability.
- C. Generator frequency oscillations small with poor but adequate damping.
- D. No negative impact on existing V.C. Summer #1 offsite power.
- E. NERC Reliability Standard TPL-002 compliance demonstrated.

A.3. Single line to ground fault with delayed clearing on the future V.C. Summer #3 switchyard to the existing V.C. Summer #1 generator switchyard bus #2
- A. Large rotor angle oscillation for system generators with poor damping.
- B. There was no indication of voltage instability.
- C. Generator frequency oscillations moderate with adequate damping.
- D. Loss of offsite power to V.C. Summer #1 Engineered Safeguard Features 7.2kV buses not due to V.C. Summer #3 generator.
- E. NERC Reliability Standard TPL-003 compliance demonstrated.

A.4. Three phase fault with normal clearing on the existing V.C. Summer #1 generator bus #1
- A. Moderate rotor angle oscillation for system generators with adequate damping.
- B. There was no indication of voltage instability.
- C. Generator frequency oscillations moderate and adequately damped.
- D. Special Protection System to trip Fairfield Pumped Storage #1-8 required previously identified for V.C. Summer #2 generator.
- E. No negative impact on existing V.C. Summer #1 offsite power.
- F. NERC Reliability Standard TPL-004 compliance demonstrated.

A.5. Three phase fault with normal clearing on the existing V.C. Summer #1 generator bus #2 to Fairfield Pumped Storage Generators #5-8
- A. Moderate rotor angle oscillation for SCE&G generators with poor damping due to reduced system synchronizing torque during low system load conditions.
- B. There was no indication of voltage instability.
- C. Generator frequency oscillations moderate but poorly damped.
- D. No negative impact on existing V.C. Summer #1 offsite power.
- E. NERC Reliability Standard TPL-004 compliance demonstrated.

4. Stability Study Conclusions

This study demonstrates that the proposed V.C. Summer #3 generator interconnection to the SCE&G system is compliant with NERC Reliability Standards. There was no indication of voltage instability. None of the simulations indicated that system UFLS or generator under/overfrequency operations would occur. Neither does the interconnection have a negative impact on the existing V.C. Summer #1 offsite power quality. The cases that resulted in the loss of offsite power for the V.C. Summer #1 generator were caused by delayed clearing relay settings and not by the V.C. Summer #3 generator. Several cases with faults located near the V.C. Summer #1 and the Fairfield Pumped Storage units confirmed the need for a Special Protection System that will trip the Fairfield units to prevent instability. The need for this Special Protection System was identified during the V.C. Summer #2 System Impact Study. The SCE&G Relay and SCADA Applications department has identified the operating features of such a scheme and will make the required system protection improvements.

III. Required Interconnection Facilities

The analyses performed in this study confirmed the results of the Feasibility Study and show that constructing two new 230kV lines from the proposed VC Summer #3 generator to near the Charleston area load center, plus additional transmission improvements described below, are required to reliably transmit SCE&G's ownership portion of the 1,165 MW of the proposed VC Summer #3 generator from the VC Summer area to the remainder of the SCE&G system. Additionally, the off-peak analysis identified the need for a series reactor on the VC Summer #1-Newport (Duke) 230kV line to limit the power flow on that line.

The required transmission improvements:

1. Construct VC Summer New-St George 230kV Double Circuit B1272 line (135 mi)
   (Add 2 230kV terminals at VC Summer New using breaker-and-a-half design)

2. Construct VC Summer New-VC Summer #1 Bus #1
   (Add 230kV terminal at existing VC Summer #1 Bus #1)
   (Add 230kV terminal at VC Summer New using breaker-and-a-half design)

3. Establish a St George 230kV Substation using breaker-and-a-half design
   (6 terminals - 9 breakers)
   (Future 2 terminals - 3 breakers)
   (Add land)

4. Fold-in the Canadys-Santee 230kV line at St George 230kV

5. Upgrade the Canadys-St George 230kV line to B1272
   (Upgrade Canadys terminal)

6. Fold-in the Wateree-Summerville 230kV line at St George 230kV

7. Upgrade the St George-Summerville 230kV line to B1272
   (Upgrade Summerville terminal)

8. Upgrade Saluda-Georgia Pacific 115kV Double Circuit line to 1272
   (Upgrade Saluda terminal)

9. Install a 230kV Series Reactor (25% on a 500 MVA base) on the VC Summer #1-Newport (Duke) 230kV line

Add six (6) terminals (8 breakers) to the VC Summer New substation using breaker-and-a-half design.

10. One - for VC Summer #3 generator step up transformer
11. One - for VC Summer #3 station service

12. One - for the new 230kV line to the existing VC Summer #1 bus #1
13. Two - for the 2 new 230kV lines to St George 230kV
14. One - for the new 230kV line to Sandy Run (Santee Cooper)

To resolve overstressed conditions of the breakers as described in the Short Circuit Analysis section, Transmission Planning recommends replacing the following breakers with higher interrupting capability breakers:

Location	Voltage	Breaker #
VC Summer #1	230	8822
VC Summer #1	230	8932
VC Summer #1	230	8902
Lyles	115	732
Edenwood	115	3052
Dunbar	115	1112
A.M. Williams	115	5712
St. George	115	5002
St. George	115	5022
St. George	115	5052
St. George	115	5082

As stated in the stability analysis section, several cases with faults located near the VC Summer #1 and the Fairfield Pumped Storage units revealed a need for a Special Protection System that will trip the Fairfield units to prevent instability. The SCE&G Relay and SCADA Applications department has identified the operating features of such a scheme and will make the required system protection improvements.

IV. Engineering Design & Cost

A. Engineering Single line Layout & Substation Arrangement

VC Summer #3

Transmission Single Line

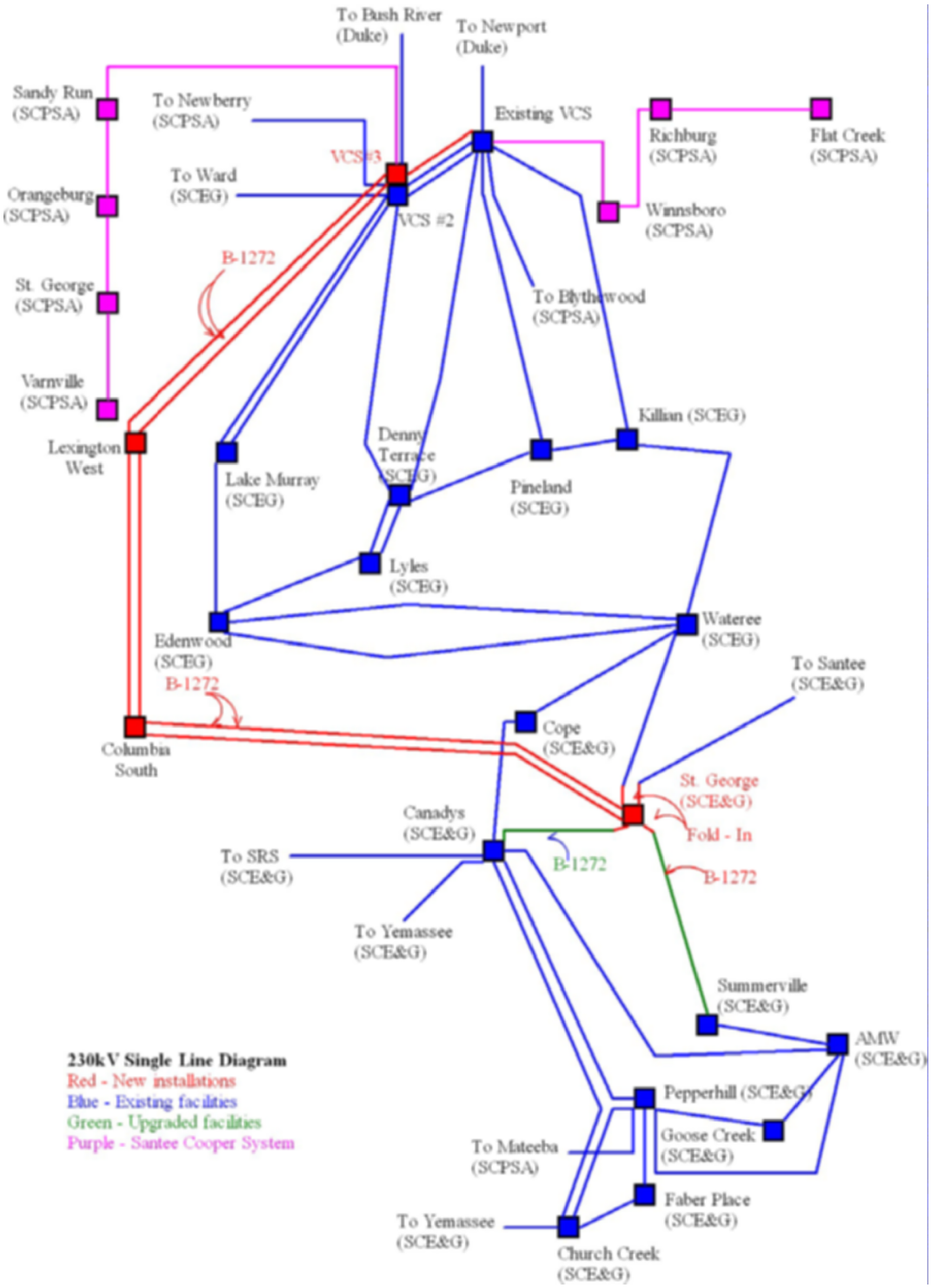

Substation Arrangement

VC Summer #3

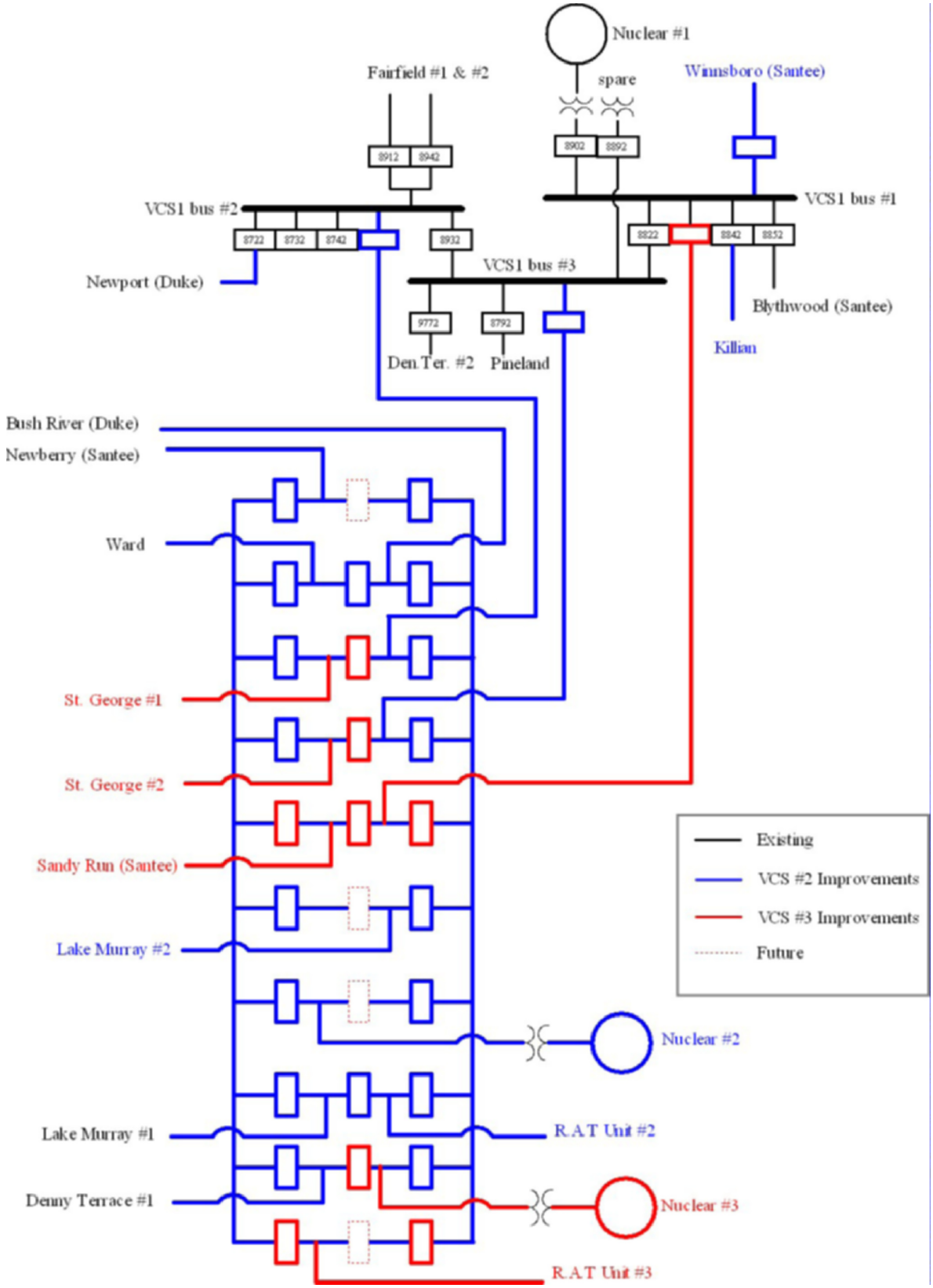

Substation Arrangement

St George 230kV

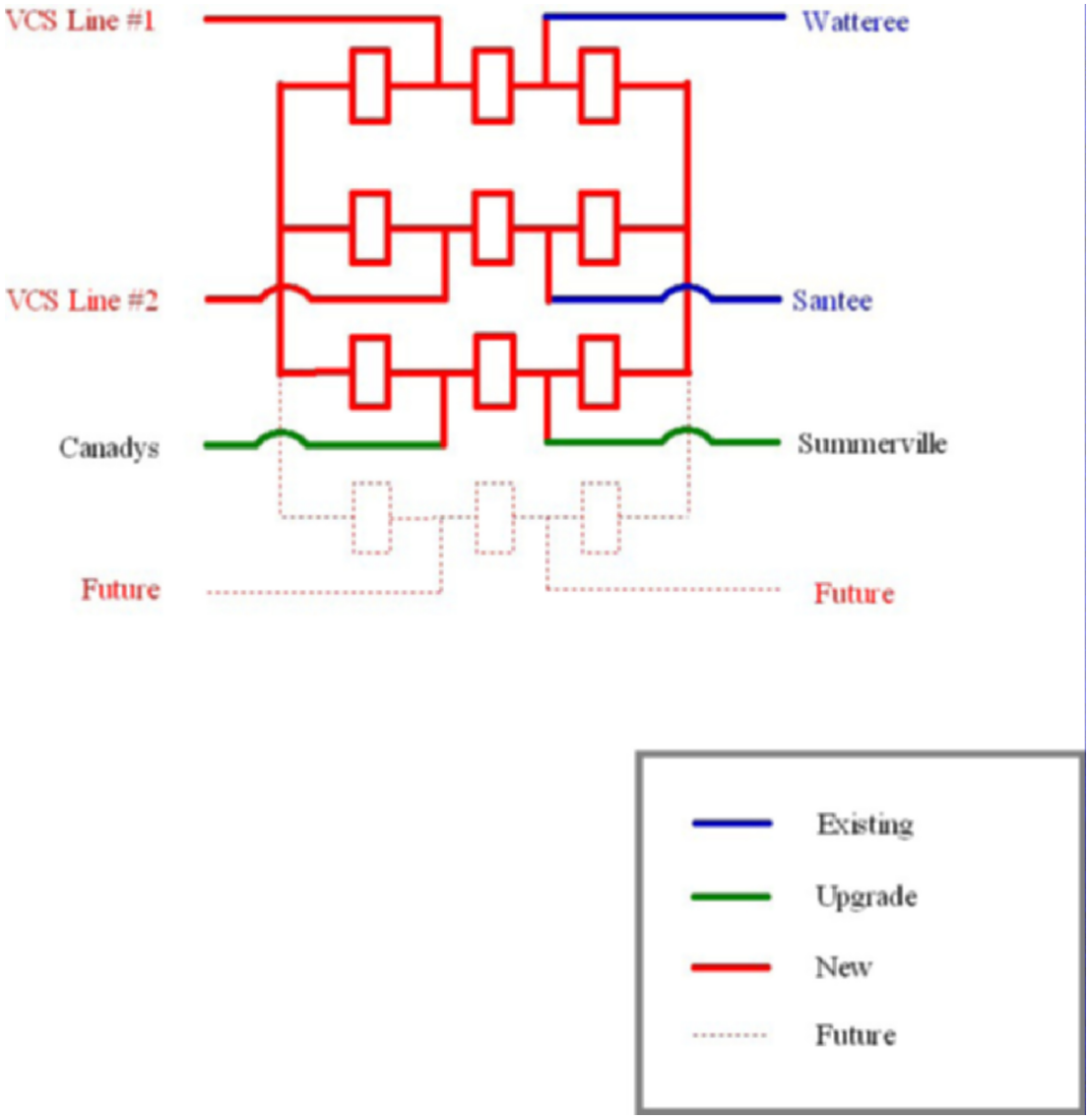

B. Transmission & Substation Cost

All cost estimates are in 2006 dollars.

1. Construct VC Summer New-St George 230kV
   Double Circuit B1272 line (135 miles) $153,950,000

2. Construct VC Summer New-VC Summer #1 Bus #1) $600,000
   (Add 230kV terminal at existing VC Summer #1 Bus #1) $1,100,000

3. Construct St George 230kV Substation using
   breaker-and-a-half design $11,400,000

4. Fold-in the Canadys-Santee 230kV line at St George 230kV $1,100,000

5. Upgrade the Canadys-St George 230kV line to B1272 ..... $7,300,000

6. Fold-in the Wateree-Summerville 230kV line at St George 230kV $1,100,000

7. Upgrade the St George to Summerville 230kV line to B1272 ..... $15,300,000

8. Upgrade Saluda-Georgia Pacific 115kV Double Circuit line to 1272 $11,900,000

9. Add six (6) 230kV terminals (8 breakers) at VC Summer New using
   breaker-and-a-half design $12,000,000

10. Install a 230kV Series Reactor (25% on a 500 MVA base) on the
    VC Summer #1-Newport (Duke) 230kV line $3,800,000

Replace overstressed breakers

11. Three (3) 230kV breakers $660,000
12. Eight (8) 115kV breakers $1,200,000

Total Cost Estimate $221,410,000

Generator Interconnection Facilities Study

SCE&G V.C. Summer Nuclear #2

Prepared for:
SCE&G Nuclear Group

April 14, 2008

Prepared by:
SCE&G Transmission Planning

TABLE OF CONTENTS

General Discussion..... Page 3

I. Generator Information ..... Page 4

II. Cost Estimates and Completion Dates ..... Page 4

III. Facilities Classifications ..... Page 6

IV. Electrical Switching Configuration ..... Page 7

Generator Interconnection Facilities Study

SCE&G V.C. Summer Nuclear #2

A Generator Interconnection Facilities Study is an extension of the previous Generation Interconnection System Impact Study, and specifies and estimates the cost of the equipment, engineering, procurement and construction work needed to implement the conclusions of the Interconnection System Impact Study in accordance with Good Utility Practice to physically and electrically connect the Interconnection Facility to the Transmission System. A Generator Interconnection Facilities Study also identifies the electrical switching configuration of the connection equipment, including, without limitation: the transformer, switchgear, meters, and other station equipment; the nature and estimated cost of any Transmission Provider's Interconnection Facilities and Network Upgrades necessary to accomplish the interconnection; and an estimate of the time required to complete the construction and installation of such facilities.

General Discussion

The SCE&G Nuclear Group has applied for interconnection of a new 1375 MVA nuclear generator near the existing V.C. Summer site. This new generator would be jointly owed by SCE&G and Santee Cooper, SCE&G would own 55% and Santee Cooper would own the remaining 45%. In this study Santee Cooper's portion of the generator output was represented as delivered to the Santee Cooper system.

The previously completed System Impact Study recommended the following transmission line improvements:

1. Construct VC Summer-WInnsboro- Killian 230kV
    - (add 230kV terminal at Killian)
2. Construct VC Summer-Lake Murray 230kV
    - (add 230kV terminal at Lake Murray)
3. Construct VC Summer #2-VC Summer #1 bus #2
    - (add 230kV terminal at VC Summer #1 bus #2)
4. Construct VC Summer #2-VC Summer #1 bus #3
    - (add 230kV terminal at VC Summer #1 bus #3)
5. Upgrade existing Denny Terrace-Lyles 230kV
6. Add a 3rd 230/115kV 336 MVA auto transformer at Lake Murray
7. Add a 3rd 230/115kV 336 MVA auto transformer at Denny Terrace
8. Upgrade existing Saluda-McMeekin 115kV line
9. Upgrade existing Lake Murray-McMeekin 115kV line
10. Upgrade existing Lake Murray-Saluda 115kV
11. Add second 230kV bus tie breaker at Denny Terrace

Construct a new 230kV generator substation at the proposed site using a breaker-and-a-half design with ten 230kV terminals

Construct Transmission from VC Summer #2 Generator to VC Summer #2 Switchyard

Re-terminate VC Summer area lines to the VC Summer #2 Substation

1. Re-terminate Bush River (Duke) 230kV line to VC Summer #2 substation
2. Re- terminate Newberry (SCPSA) 230kV line to VC Summer #2 substation (paid by SCPSA)
3. Re-terminate Ward 230kV line to VC Summer #2 substation
4. Re-terminate Lake Murray 230kV #1 line to VC Summer #2 substation
5. Re-terminate Denny Terrace 230kV #1 line to VC Summer #2 substation

Re-terminate VC Summer area lines to the VC Summer #1 Substation

1. Re-terminate Blythewood (SCPSA) 230kV line to VCS bus #1 (paid by SCPSA)
2. Re-terminate Pineland 230kV line to VCS bus #3
3. Re-terminate Denny Terrace 230kV line #2 to VCS bus #3
4. Re-terminate Newport (Duke) 230kV line to VCS bus #2

Replace overstressed
1. 230kV breakers - 9
2. 115kV breakers - 9

In the future, SCE&G Transmission Planning will periodically review the results of this Interconnection Facilities Study to determine if the recommended transmission expansion and the associated cost estimates remain valid.

I. Generator Information

The generator design consists of a single nuclear unit and one step-up transformer. The generator unit will have a maximum gross MVA output capacity of 1,375 MVA and a maximum continuous net MW of 1,165 MW.

The generator design consists of the following information:

MVA – gross:	1375
MW – net:	1165
Power Factor:	between .90 and 1.05
Voltage:	22kV
Speed:	1800 rpm
X'd-sat.: 0.465 PU;	X''d-sat.: 0.325 PU
X2-sat.: 0.320 PU;	X0: 0.237 PU

II. Cost Estimates of Transmission Provider's Interconnection Facilities and Network Upgrades and Completion Dates

The Table below includes the cost estimate for the required Transmission Provider Interconnection Facilities, the required Network Upgrades and the estimated completion date for each of these required projects.

VC Summer Unit #2 Transmission Cost Estimates
Escalated at 4% per year from 2008

Project Name	Scheduled End Date	Budget 2008	Budget 2009	Budget 2010	Budget 2011	Budget 2012	Budget 2013	Budget 2014	Budget 2015	Budget 2016	Budget 2017	Budget 2018	Totals
Summer Unit #2 230KV Switchyard - Construct	12/31/2013				1,000 ,000	15,000,000	17,000 ,000		Budgeted in Nuclear				**33,000,000**
Summer #1-Killian -230KV Line - Construct B1272 (Estimate includes R/W. Assume rebuild of current H-frame for approx approx 24 miles single circuit single shaft – no additional R/W required and a single shaft single circuit for 3 miles. Assume additional R/W of 70ft alongside existing R/W from Pineland to Killian – approx 26 acres @ 80,000 per Acre)	12/31/2015					500,000	1,500,000	14,000,000	19,000,000				**35,000,000**
Killian Add 230KV Term – Summer-Construct	12/31/2015								840,000				**840,000**
VCS #2-Lake Murray Trans #2-230KV Line - Construct (assume rebuild of current H-frame approx 19 miles single circuit single shaft – no additional R/W required)	12/31/2015					800,000	3,000,000	10,000,000	10,000,000				**23,800,000**
Lake Murray Transmission: Add 230KV Term VCS#2	12/31/2015								840,000				**840,000**
Summer Unit #2-230KV Tie to Bus #2 - Construct (Assume 0.75 mile)	12/31/2013						840,000						**840,000**
Summer Unit #1 – Add 230KV Term to Bus #2 - Construct	12/31/2013						840,000						**840,000**
Summer Unit #2-230KV Tie to Bus #3 – Construct (Assume 0.75 mile)	12/31/2013						840,000						**840,000**
Summer Unit #1 – Add 230KV Term to Bus #3 - Construct	12/31/2013						840,000						**840,000**
Denny Terrace-Lyles 230KV – Rebuild to B1272 (Approx 2.75 mile)	12/31/2015							100,000	2,000,000				**2,100,000**
VC Sum Area: Reterminate 230kV lines to VCS #1 Sub	12/31/2013						950,000						**950,000**
VC Sum Area: Reterminate 230kV Lines to VCS #2 Sub	12/31/2013						1,800,000						**1,800,000**
Lake Murray Trans – Add 3rd 336 Autobank	12/31/2015							3,000,000	4,000,000				**7,000,000**
Denny Terrace – Add 3rd 336 Autobank / 230kV BT	12/31/2015							5,000,000	6,000,000				**11,000,000**
Saluda-McMeekin 115KV Line – Upgrade (Approx 0.2 mile)	12/31/2015						200,000						**200,000**
Lake MurrayTrans-McMeekin 115KV Line – Upgrade (Approx 0.6 mile)	12/31/2015								700,000				**700,000**
Lake Murray-Saluda 115KV Line Upgrade (Approx 0.5 mile)	12/31/2015								630,000				**630,000**
Various 115KV PRCB Upgrade Interrupter Rating (Assume 9 PRCBs)	12/31/2015							800,000	3,000,000				**3,800,000**
Various 230KV PRCB Upgrade Interrupter Rating (Assume 9 PRCBs)	12/31/2015							1,300,000	5,000,000				**6,300,000**
VC Summer Unit #2 to Unit #2 Sub 230kV Line: Const	12/31/2013						500,000						**500,000**
VC Summer RAT #2 to Unit #2 Sub 230kV Line: Constr	12/31/2013						500,000						**500,000**
VCS - Parr 115kV Safeguard Line: Raise for Unit 2	12/1/2009		70,000										**70,000**
VC Summer Sub: 230kV BB Bus Tie between #1 & #3	5/1/2009		250,000										**250,000**
		0	**320,000**	**0**	**1,000,000**	**16,300 ,000**	**28,810 ,000**	**34,200 ,000**	**52,010,000**	**0 0**			**132,640,000**

III. Facilities Classifications

The Facilities Study report must identify and estimate the cost of any Transmission Provider's Interconnection Facilities and Network Upgrades necessary to accomplish the interconnection. The diagram below includes color and line style indications of which facilities fall into the classification of Network Upgrades, Transmission Provider's Interconnection Facilities or Interconnection Customer's Interconnection Facilities. Cost estimates for all Network Upgrades and Transmission Provider's Interconnection Facilities are included in Section II of this report. *The diagram below is different from the diagram in the System Impact Study and reflects the most recent substation design.*

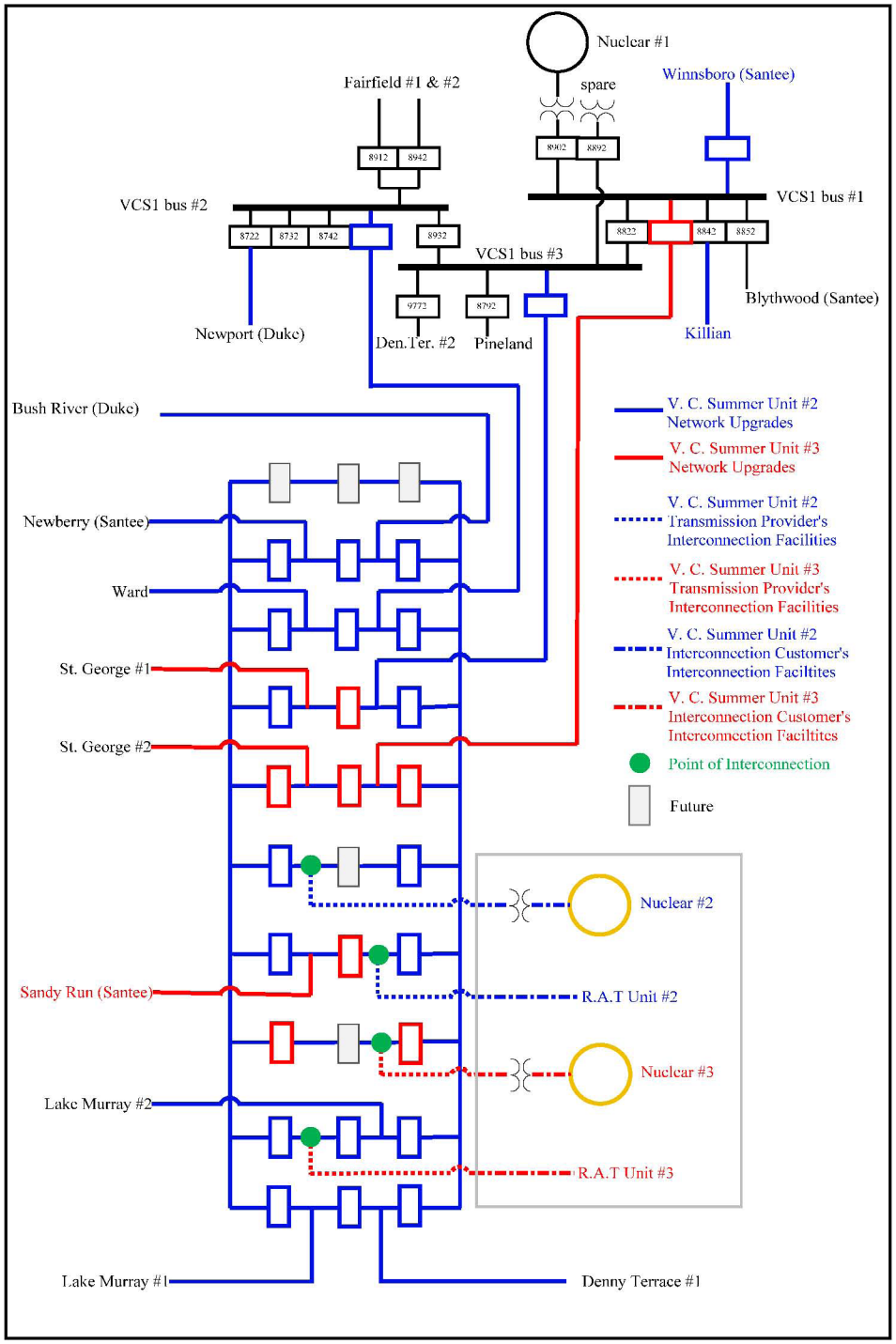

IV. Electrical Switching Configuration

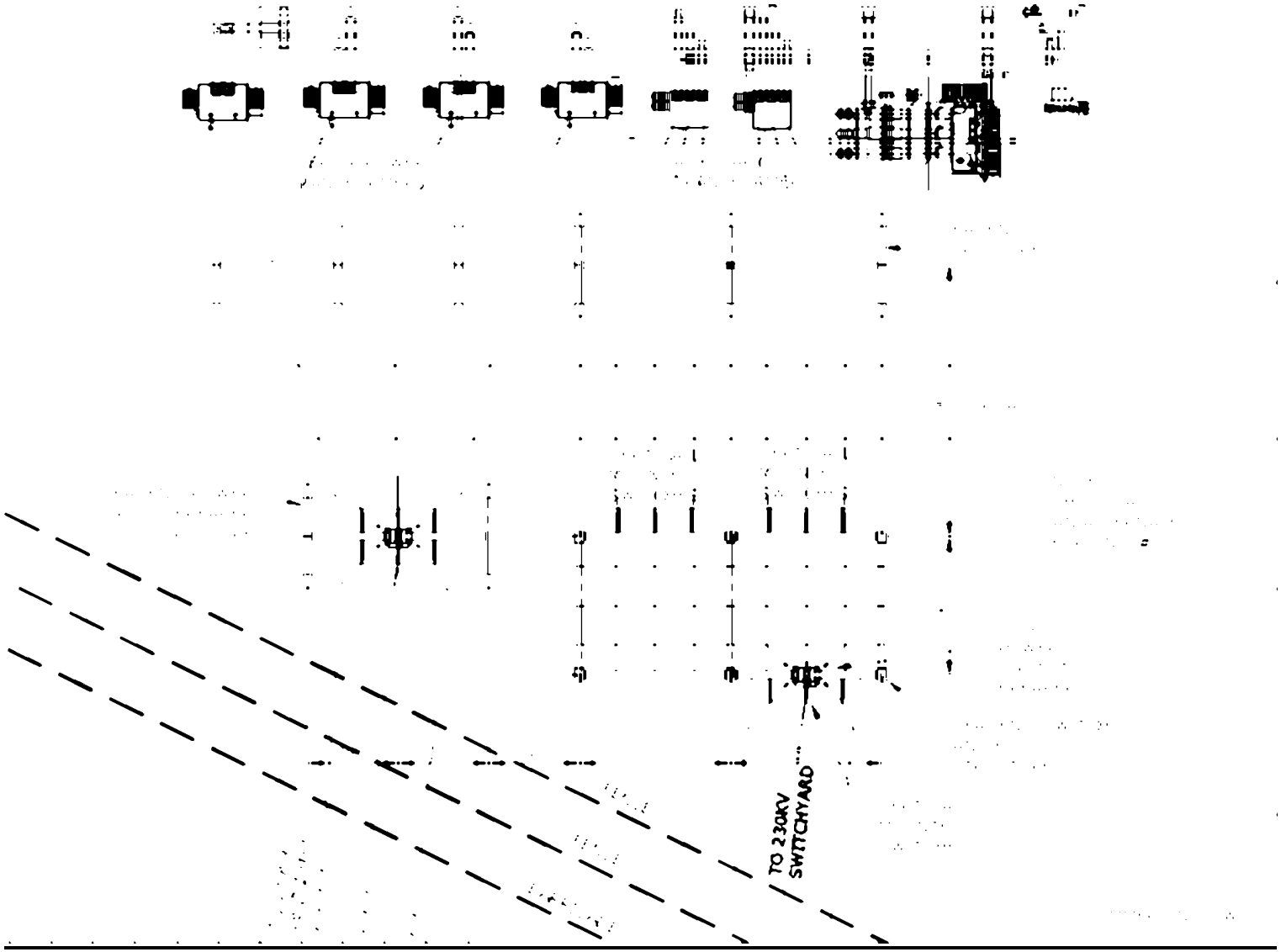

Generator Interconnection Facilities Study

SCE&G V.C. Summer Nuclear #3 – Revision #2

Prepared for:
SCE&G Nuclear Group

April 10, 2008
May 27, 2008 – Revision #1
May 29, 2008 – Revision #2

Prepared by:
SCE&G Transmission Planning

May 29, 2008 – Revision #2
This revision renames and rearranges one of the associated projects in the narrative and in the cost estimate table for clarification. The rest of the report is unchanged and included in its entirety.

May 27, 2008 – Revision #1
This report corrects a double entry line item in the cost estimate for the VC Summer #3 interconnection. The rest of the report is unchanged and included in its entirety.

TABLE OF CONTENTS

General Discussion ..... Page 3

I. Generator Information ..... Page 4

II. Cost Estimates and Completion Dates ..... Page 4

III. Facilities Classifications ..... Page 6

IV. Electrical Switching Configuration ..... Page 7

V. Facilities Diagram with VC Summer #2 and #3 ..... Page 8

Generator Interconnection Facilities Study

SCE&G V.C. Summer Nuclear #3

A Generator Interconnection Facilities Study is an extension of the previous Generation Interconnection System Impact Study, and specifies and estimates the cost of the equipment, engineering, procurement and construction work needed to implement the conclusions of the Interconnection System Impact Study in accordance with Good Utility Practice to physically and electrically connect the Interconnection Facility to the Transmission System. A Generator Interconnection Facilities Study also identifies the electrical switching configuration of the connection equipment, including, without limitation: the transformer, switchgear, meters, and other station equipment; the nature and estimated cost of any Transmission Provider's Interconnection Facilities and Network Upgrades necessary to accomplish the interconnection; and an estimate of the time required to complete the construction and installation of such facilities.

General Discussion

The SCE&G Nuclear Group has applied for interconnection of a new 1375 MVA nuclear generator near the existing V.C. Summer site. This new generator would be the third nuclear generator on this site and would be jointly owned by SCE&G and Santee Cooper, SCE&G would own 55% and Santee Cooper would own the remaining 45%. In this study Santee Cooper's portion of the generator output was represented as delivered to the Santee Cooper system.

The previously completed System Impact Study for VC Summer #3 recommended the following transmission line improvements:

1. 230KV Switchyard Additions for Unit #3 - Add six (6) 230kV terminals (8 breakers) at VC Summer New using breaker-and-a-half design
2. Construct VC Summer New-St George 230kV Double Circuit B1272 line (135 miles)
3. Construct VC Summer New-VC Summer #1 Bus #1)
   (Add 230kV terminal at existing VC Summer #1 Bus #1)
4. Construct St George 230kV Substation using breaker-and-a-half design
5. Fold-in the Canadys-Santee 230kV line at St George 230kV
6. Upgrade the Canadys-St George 230kV line to B1272
7. Fold-in the Wateree-Summerville 230kV line at St George 230kV
8. Upgrade the St George to Summerville 230kV line to B1272
9. Upgrade Saluda-Georgia Pacific 115kV Double Circuit line to 1272
10. Install a 230kV Series Reactor (25% on a 500 MVA base) on the VC Summer #1-Newport (Duke) 230kV line

Replace overstressed breakers

11. Three (3) 230kV breakers
12. Eight (8) 115kV breakers

In the future, SCE&G Transmission Planning will periodically review the results of this Interconnection Facilities Study to determine if the recommended transmission expansion and the associated cost estimates remain valid.

I. Generator Information

The generator design consists of a single nuclear unit and one step-up transformer. The generator unit will have a maximum gross MVA output capacity of 1,375 MVA and a maximum continuous net MW of 1,165 MW.

The generator design consists of the following information:

MVA – gross:	1375
MW – net:	1165
Power Factor:	between .90 and 1.05
Voltage:	22kV
Speed:	1800 rpm
X'd-sat.: 0.465 PU;	X''d-sat.: 0.325 PU
X2-sat.: 0.320 PU;	X0: 0.237 PU

II. Cost Estimates of Transmission Provider's Interconnection Facilities and Network Upgrades and Completion Dates

The Table below includes the cost estimate for the required Transmission Provider Interconnection Facilities, the required Network Upgrades and the estimated completion date for each of these required projects.

VC Summer Unit #3 Transmission Cost Estimates
Escalated at 4% per year from 2008

Project Name	Scheduled End Date	Budget 2008	Budget 2009	Budget 2010	Budget 2011	Budget 2012	Budget 2013	Budget 2014	Budget 2015	Budget 2016	Budget 2017	Budget 2018	Totals
230KV Switchyard Additions for Unit #3 - Add six (6) 230kV terminals (8 breakers) at VC Summer New using breaker-and-a-half design	12/1/2018									700,000	6,400,000	11,800,000	**18,900,000**
VCS #2 to St. George 230kV - Construct b1272 line (135 miles)	12/1/2018								500,000	1,500,000	100,000,000	144,320,000	**246,320,000**
Summer Unit #3-230KV Tie to Bus #1 – Construct (Assume 0.75 mile)	12/1/2018											960,000	**960,000**
VCS #1, Bus #1: Add Term to VCS #2 Sub	12/1/2018											1,760,000	**1,760,000**
VC Summer Unit #3 to #2 Sub 230kV Line: Const	12/1/2018											600,000	**600,000**
VC Summer RAT #3 to #2 Sub 230kV Line: Constr	12/1/2018											600,000	**600,000**
St. George 230kV Switching Station: Const Brkr ½	12/1/2018									240,000	8,000,000	10,000,000	**18,240,000**
Canadys - Santee 230kV: Fold In to St. George 230kV	12/1/2018											1,760,000	**1,760,000**
Canadys - St. George 230kV: Upgrade to B1272	12/1/2018									680,000	4,000,000	7,000,000	**11,680,000**
Wateree - Sum'ville 230kV: Fold In to St. George 230kV	12/1/2018											1,760,000	**1,760,000**
St. George - Sum'ville 230kV: Upgrade to B1272	12/1/2018									480,000	8,000,000	16,000,000	**24,480,000**
Sal Hydro - Ga Pac 115kV Double Ckt: Upgd to 1272	12/1/2018									100,000	8,000,000	11,000,000	**19,100,000**
VCS #1 Sub: Add 230kV Series Reactor in Newport Duke Line	12/1/2018										1,100,000	5,000,000	**6,100,000**
Various 230KV PRCB Upgrade Interrupter Rating (Assume 3 PRCBs)	12/1/2018											1,056,000	**1,056,000**
Various 115KV PRCB Upgrade Interrupter Rating (Assume 8 PRCBs)	12/1/2018											1,920,000	**1,920,000**
		0	**0**	**0**	**0**	**0**	**0**	**0**	**500,000**	**3,700,000**	**135,500,000**	**215,536,000**	**355,236,000**

III. Facilities Classifications

The Facilities Study report must identify and estimate the cost of any Transmission Provider's Interconnection Facilities and Network Upgrades necessary to accomplish the interconnection. The diagram below includes color coded indications of which facilities fall into the classification of Network Upgrades, Transmission Provider's Interconnection Facilities or Interconnection Customer's Interconnection Facilities. Cost estimates for all Network Upgrades and Transmission Provider's Interconnection Facilities are included in Section II of this report.

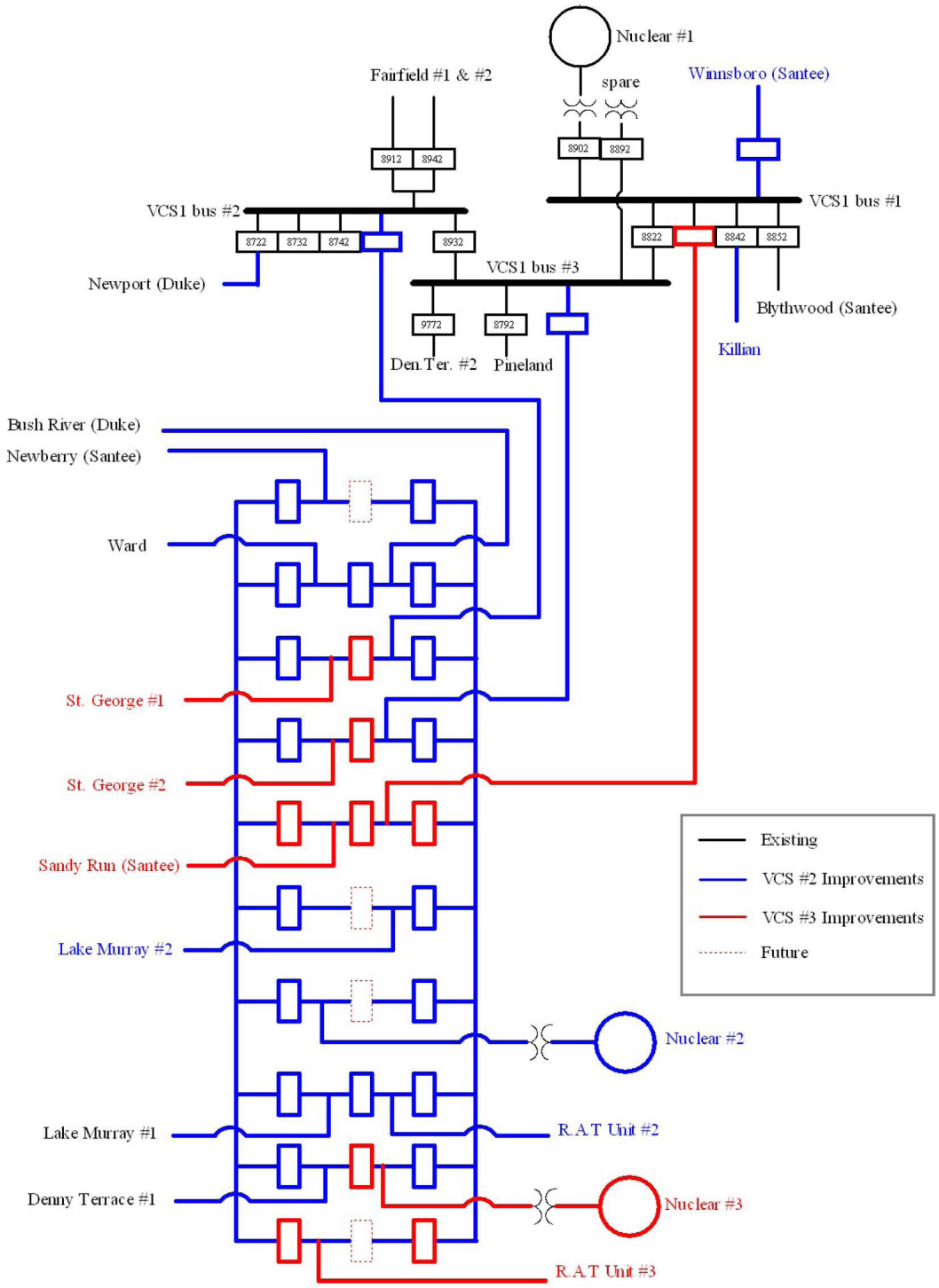

IV. Electrical Switching Configuration

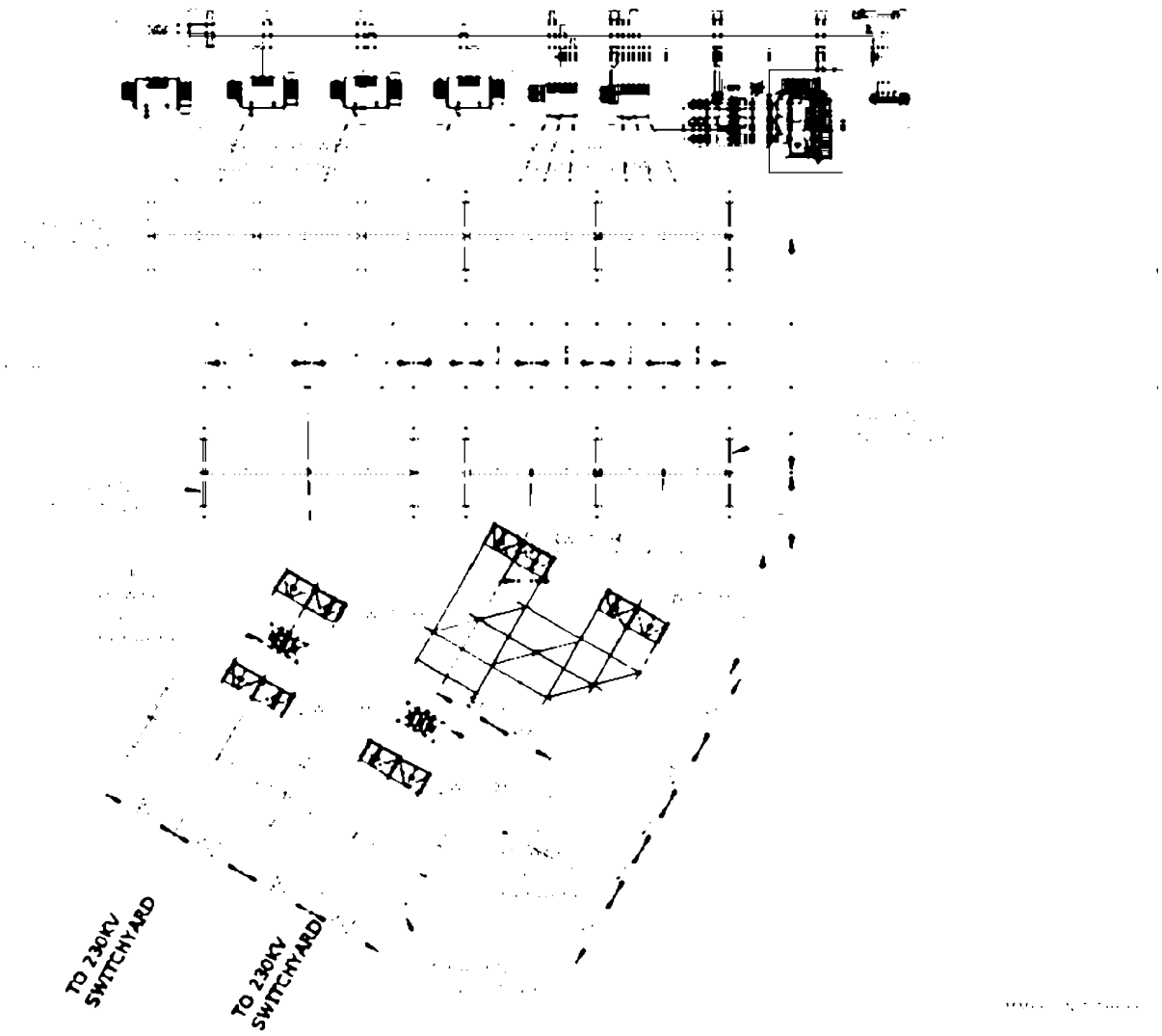

V. Facilities Diagram with VC Summer #2 and VC Summer #3

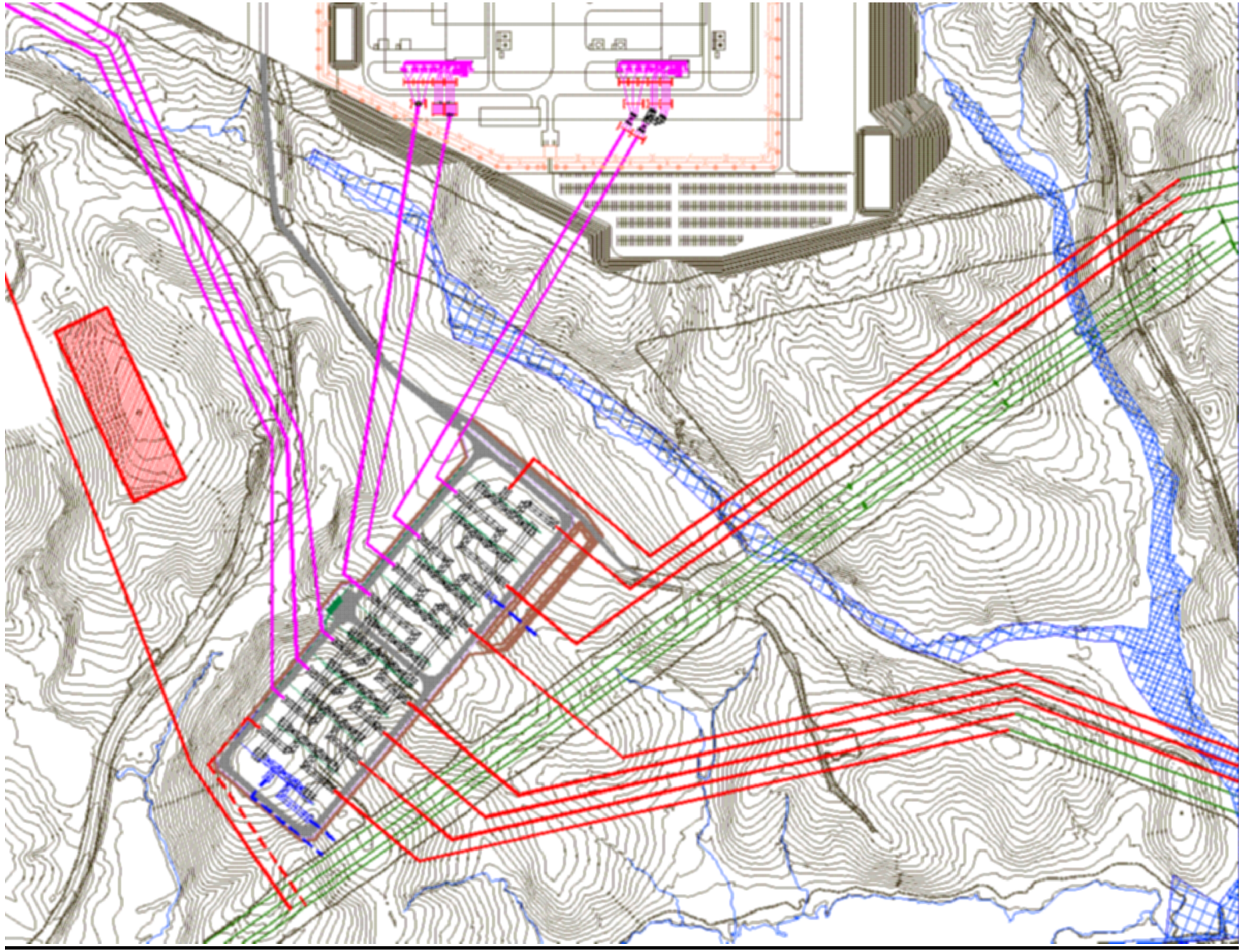

EXHIBIT R

PUBLIC NOTICE

Combined Application of South Carolina Electric & Gas Company for a Certificate of Environmental Compatibility and Public Convenience and Necessity and for a Base Load Review Order
Public Service Commission Docket No. 2008-196-E

1. INTRODUCTION

This **Exhibit R** provides the Public Notice of filing and hearing of the Combined Application for Certificate of Environmental Compatibility and Public Convenience and Necessity and for a Base Load Review Order with the Public Service Commission of South Carolina.

PUBLIC SERVICE COMMISSION OF SOUTH CAROLINA

DOCKETING DEPARTMENT

NOTICE OF FILING AND HEARING

DOCKET NO. 2008–196–E

SOUTH CAROLINA ELECTRIC & GAS COMPANY – COMBINED APPLICATION FOR CERTIFICATE OF ENVIRONMENTAL COMPATABILITY AND PUBLIC CONVENIENCE AND NECESSITY AND FOR A BASE LOAD REVIEW ORDER

On May 30, 2008, South Carolina Electric & Gas Company ("SCE&G" or "Company") filed an Application with the Public Service Commission of South Carolina ("Commission") requesting that the Commission issue a Certificate of Environmental Compatibility and Public Convenience and Necessity and for a Base Load Review Order authorizing SCE&G to construct and operate two (2), 1,117 net megawatt nuclear facilities to be located at the Virgil C. Summer Nuclear Station site ("Summer Station") near Jenkinsville, South Carolina. The Application was filed pursuant to the provisions of the Utility Facility Siting and Environmental Protection Act, S.C. Code Ann. §§ 58-33-10 *et seq.* (1976, as amended); the Base Load Review Act, S.C. Code Ann. §§ 58-33-210 *et seq.* (1976, as amended); and the Commission's Rules of Practice and Procedure, 26 S.C. Code Ann. Regs. 103-823 (1976, as amended).

SCE&G states in the Application that in order to meet the growing demands and needs of its customers for electric power, to support the continued economic development and prosperity of the State of South Carolina, and to maintain the reliability of its electric system, the Company plans to construct two nuclear generating units, namely, AP1000 Advanced Passive Safety Power Plants ("AP1000"), located near Jenkinsville, South Carolina and approximately one (1) mile from Summer Station Unit 1. The AP1000 units, identified in the Application as Unit 2 and Unit 3, and associated facilities will be jointly owned by SCE&G and the South Carolina Public Service Authority. According to the Application, the AP1000 represents an advanced nuclear generating design that has been approved and certified by the United States Nuclear Regulatory Commission. Moreover, the Company states that the AP1000 units and associated facilities will be constructed by a consortium consisting of Westinghouse Electric Company, LLC and Stone & Webster, Inc. SCE&G anticipates that AP1000 Unit 2 and Unit 3 will become operational in 2016 and 2019, respectively.

SCE&G further requests in its Application authorization to revise its current schedules of electric rates and charges to add the incremental revenue requirements related to the Company's investment in the nuclear generating facilities described above during construction. The Company requests that the proposed increases be effective March 2009. The proposed average increase to the residential class is 0.52%; small general service class is 0.48%; medium general service class is 0.51%; and large general service class is 0.44%. Amount and percentage increases vary by rate schedules within these classes, and individual customer bill increases may also vary depending upon actual usage patterns and amount of consumption.

A copy of the Company's Application may be obtained from the Commission at the following address: Public Service Commission of South Carolina, Docketing Department, 101 Executive Center Drive, Columbia, South Carolina 29210. Additionally, the Application is available on the Commission's website at www.psc.sc.gov and is available from the corporate office of South Carolina Electric & Gas Company at 1426 Main Street, Columbia, South Carolina, 29201.

In order to receive testimony and evidence from all interested parties, a public hearing will be held in the Commission's Hearing Room, Synergy Business Park, 101 Executive Center Drive, Columbia, South Carolina beginning on _____, _____, 2008, commencing at 10:30 a.m.

Any person who wishes to participate in this matter, as a party of record with the right of cross-examination should file a Petition to Intervene in accordance with the Commission's Rules of Practice and Procedure on or before **_____, 2008,** and indicate the amount of time required for his presentation. Please include an email address for receipt of future Commission correspondence in the Petition to Intervene. ***Please refer to Docket No. 2008-196-E.***

Any person who wishes to testify and present evidence at the hearing should notify the Docketing Department, in writing, at the address below, the South Carolina Office of Regulatory Staff at Post Office Box 11263, Columbia, South Carolina 29211, and K. Chad Burgess, Senior Counsel, South Carolina Electric & Gas Company, 1426 Main Street, Mail Code 130, Columbia, South Carolina 29201, on or before **_____, 2008,** and indicate the amount of time required for his presentation. ***Please refer to Docket No. 2008-196-E.***

Any person who wishes to be notified of the hearing, but does not wish to present testimony or be a party of record, may do so by notifying the Docketing Department, in writing, at the address below on or before **_____, 2008**. ***Please refer to Docket No. 2008-196-E.***

PLEASE TAKE NOTICE: Any person who wishes to have his or her comments considered as part of the official record of this proceeding **MUST** present such comments, in person, to the Commission during the hearing.

Persons seeking information about the Commission's Procedures should contact the Commission in Columbia at 803-896-5100.

Public Service Commission of South Carolina
Attn: Docketing Department
Post Office Drawer 11649
Columbia, SC 29211

5-30-08