Reactor Cavity Cooling System Scaling

VHTR Cooperative Agreement

Program Review Meeting

February 25, 2009

RCCS

- Passive heat removal safety system
- Necessary to preserve radial temperature profile of HTTF
- Air-cooled and water-cooled designs
- Scaling done for air-cooled design

OSU
Oregon State
UNIVERSITY

RCCS Design

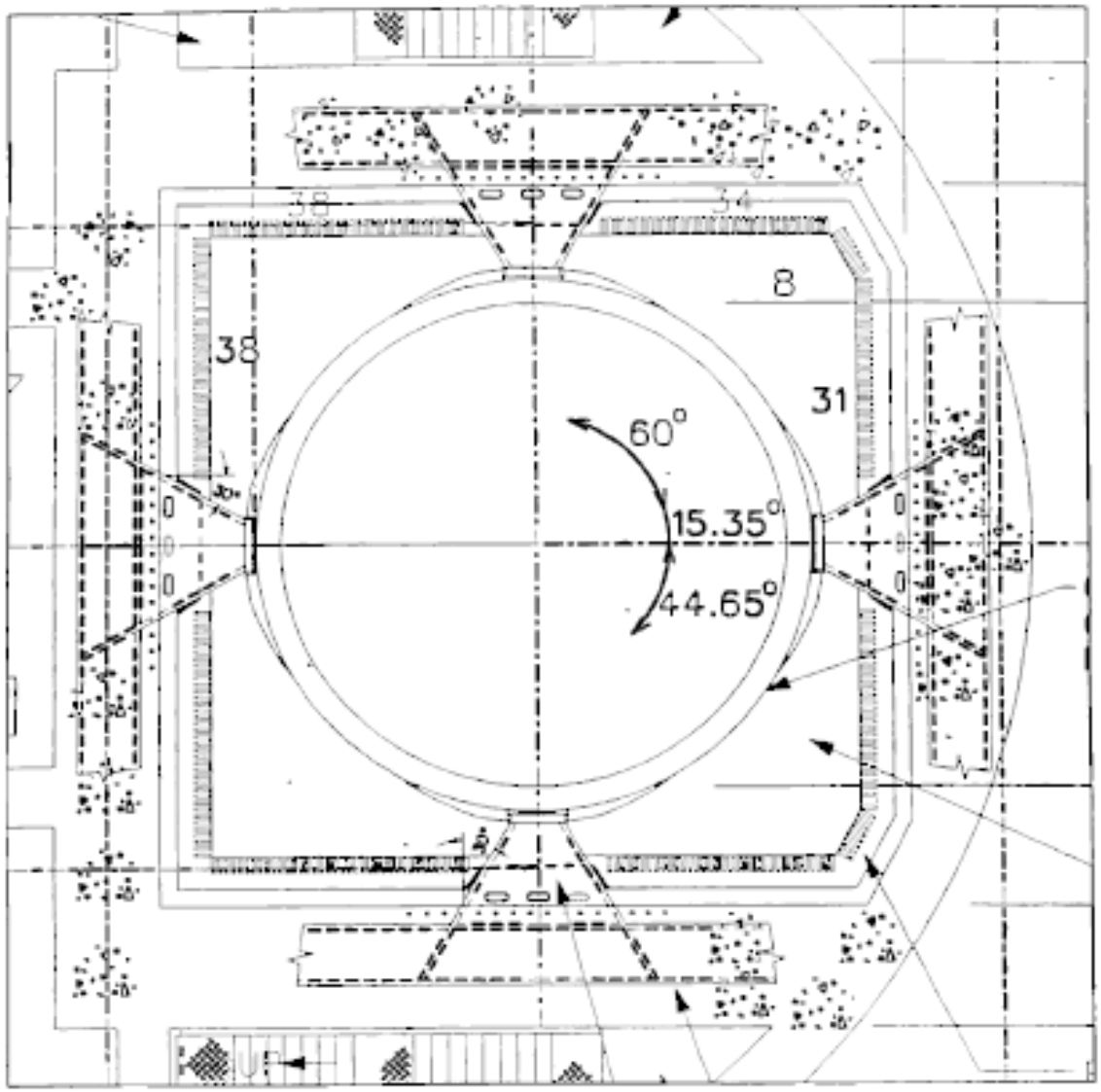

RCCS Operation

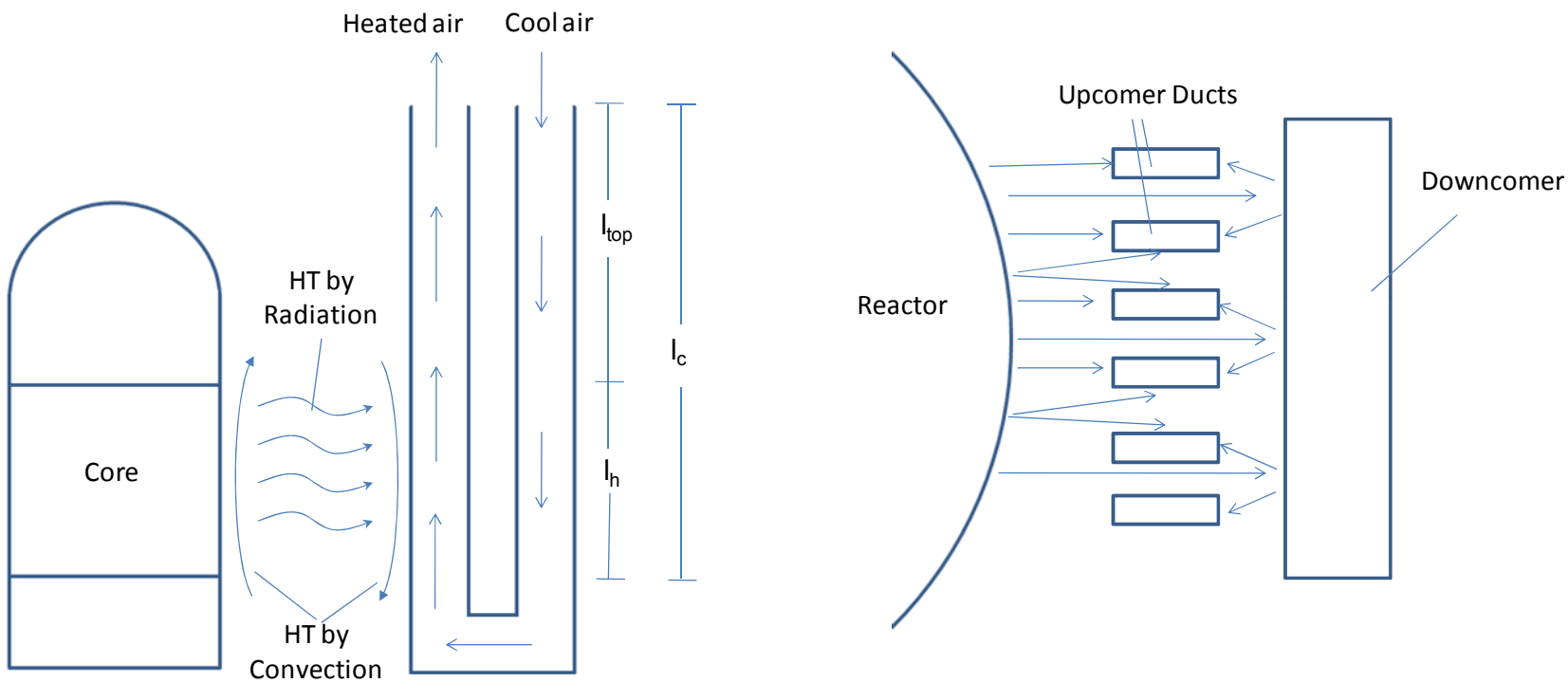

RCCS Momentum Scaling

Conservation of Momentum

$$p_{inlet} + (\rho L g)_{down} = p_{outlet} + (\rho L g)_{up} + \Delta P_F + \Delta P_K + \Delta P_{acc}$$

where

p – duct inlet or outlet pressure
(ρLg) – gravity head
ΔP_F – frictional pressure drop
ΔP_K – minor loss pressure losses
ΔP_{acc} – pressure drop due to fluid acceleration

OSU
Oregon State
UNIVERSITY

RCCS Momentum Scaling

$$p_{inlet} + (\rho L g)_{down} = p_{outlet} + (\rho L g)_{up} + \Delta P_F + \Delta P_K + \Delta P_{acc}$$

Gravity Head Momentum Terms

$$\rho_C l_{top} g + g \int_{l_h} (\rho)_{down} \, dL = \rho_H l_{top} g + g \int_{l_h} (\rho)_{up} \, dL$$

- Integral term represents change in density in heated length
- Other term is gravity head above heated length

written algebraically

$$-(\rho_C - \rho_H) g L_{tc,RCCS} = -\rho_C \beta \Delta T L_{tc,RCCS} g$$

OSU
Oregon State
UNIVERSITY

RCCS Momentum Scaling

$$p_{inlet} + (\rho L g)_{down} = p_{outlet} + (\rho L g)_{up} + \Delta P_F + \Delta P_K + \Delta P_{acc}$$

Frictional Pressure Losses

$$\Delta P_F = \frac{1}{2d_h} f \rho u^2 l$$

Split into Upcomer and Downcomer Contributions

$$\Delta P_F = \frac{fG^2}{2d_{hd}}\left(\frac{l_c}{\rho_C}\right) + \frac{fG^2}{2d_{hu}}\left(\frac{l_c - l_h}{\rho_H} + \frac{l_h}{\rho_C + \rho_H/2}\right)$$

Upcomer Pressure Drop Contribution

$$(\Delta P_F)_{upcomer} = \frac{fG^2}{2d_{hu}\rho_C}\left(\frac{l_c - l_h}{1-\beta\Delta T} + \frac{l_h}{1-\beta\Delta T/2}\right) = \frac{fG^2 l_c}{2d_{hu}\rho_{avg}}$$

OSU
Oregon State
UNIVERSITY

RCCS Momentum Scaling

$$p_{inlet} + (\rho L g)_{down} = p_{outlet} + (\rho L g)_{up} + \Delta P_F + \Delta P_K + \Delta P_{acc}$$

Pressure Drop Due to Acceleration

$$\frac{\Delta P_{acc}}{\partial z} = \frac{\partial}{\partial z}\left(\frac{G^2}{\rho}\right)$$

Using Boussinesq Approximation

$$G^2\left(\frac{1}{\rho_H} - \frac{1}{\rho_C}\right) = \left(\frac{\beta \Delta T}{1 - \beta \Delta T}\right)\frac{G^2}{\rho_C} = \beta \Delta T \frac{G^2}{\rho_H}$$

OSU
Oregon State
UNIVERSITY

RCCS Momentum Scaling

- Additional loss term for minor losses and horizontal piping contributions

$$-\rho_C \beta \Delta T L_{tc,RCCS} g = \frac{\rho_C^2 u^2 l_c}{2}\left(\frac{f_{down}}{d_{hd}\rho_C} + \frac{f_{up}}{d_{hu}\rho_{avg}} + K\right) + \left(\frac{\beta\Delta T}{1-\beta\Delta T}\right) u^2 \rho_C$$

- Non dimensionalize
- Divide by ρ_c, u_0^2

Normalized Variables

$$T^+ = \frac{T}{\Delta T_0} \qquad \left(\frac{\beta\Delta T}{1-\beta\Delta T}\right)^+ = \frac{\left(\frac{\beta\Delta T}{1-\beta\Delta T}\right)}{\left(\frac{\beta\Delta T}{1-\beta\Delta T}\right)_0} \qquad u^+ = \frac{u}{u_0}$$

OSU Oregon State UNIVERSITY

RCCS Momentum Scaling

Non Dimensional RCCS Momentum Equation

$$\frac{\beta \Delta T_0 g L_{tc,RCCS}}{u_0^{\,2}}\left(T_H^{\,+} - T_C^{\,+}\right) = \left(\frac{l_c \rho_C}{2}\left(\frac{f_{down}}{d_{hd}\rho_C} + \frac{f_{up}}{d_{hu}\rho_{avg}} + K\right)\right)u^{2+} + \left(\frac{\beta \Delta T}{1-\beta \Delta T}\right)^{+}\left(\frac{\beta \Delta T_0}{1-\beta \Delta T_0}\right)u^{2+}$$

$$\Pi_{RCCS,Ri} = \frac{\beta \Delta T_0 g L_{tc,RCCS}}{u_0^{\,2}} \qquad \Pi_{RCCS,acc} = \left(\frac{\beta \Delta T_0}{1-\beta \Delta T_0}\right)$$

$$\Pi_{RCCS,F} = \frac{l_c \rho_C}{2}\left(\frac{f_{down}}{d_{hd}\rho_C} + \frac{f_{up}}{d_{hu}\rho_{avg}} + K\right)$$

OSU
Oregon State
UNIVERSITY

RCCS Energy Scaling

Energy Transfer from Vessel Surface

$$\dot{q}_{core} = h_{out,RCCS} A_{rad} \left(T_s - T_{out,RCCS} \right) + A_{rad} \varepsilon_s \sigma \left(T_s^{\,4} - T_{out,RCCS}^{4} \right)$$

Necessary Preserved Ratio

$$\left[\frac{\dot{q}_{core}}{A_{rad} \varepsilon_s} \right]_R = 1.0$$

Oregon State University

RCCS Energy Scaling

Energy Transfer through RCCS Duct Walls and to Air

$$\dot{q}_{core} = \frac{k_{RCCS} A_{out,RCCS}}{x_{RCCS}} \left(T_{out,RCCS} - T_{in,RCCS} \right)$$

$$\dot{q}_{core} = h_{in,RCCS} A_{in,RCCS} \left(T_{in,RCCS} - T_{avg,g} \right)$$

$$\dot{q}_{core} = \frac{\left(T_{out,RCCS} - T_{ave,g} \right)}{\Sigma R_{th,RCCS}}$$

Necessary Preserved Ratio

$$\left[\dot{q}_{core} \Sigma R_{th,RCCS} \right]_R = 1.0$$

OSU
Oregon State
UNIVERSITY

RCCS Energy Scaling

Total Resistance through RCCS Duct Walls to Air

$$\Sigma R_{th,RCCS} = \frac{x_{RCCS}}{k_{RCCS} A_{out,RCCS}} + \frac{1}{h_{in,RCCS} A_{in,RCCS}}$$

- Choice of convection coefficient
- Richardson number is much less than 1.0: Use forced convection coefficient

$$\mathrm{Ri} = \frac{\mathrm{Gr}}{\mathrm{Re}^2}$$

- Gnielinski Correlation: Valid 3000 ≤ Re ≤ 5 x 10^6

$$h_{in} = \frac{k_g}{d_h}\left[\frac{(f/8)(\mathrm{Re}_d - 1000)\mathrm{Pr}}{1 + 12.7(f/8)^{1/2}\left(\mathrm{Pr}^{2/3} - 1\right)}\right]$$

$$f = \left(0.79 \ln \mathrm{Re}_{d_h} - 1.64\right)^{-2}$$

OSU
Oregon State
UNIVERSITY

RCCS Energy Scaling

Energy Transfer to Air and Corresponding Temperature Rise

$$\dot{q}_{core} = \dot{m} C_p \Delta T = \rho a_{RCCS} u C_p \Delta T$$

Necessary Preserved Ratio

Assuming Property Similitude

$$\left[\frac{\dot{q}_{core}}{a_{RCCS} u \Delta T} \right]_R = 1.0$$

OSU
Oregon State
UNIVERSITY

Reference Velocity

- Natural circulation velocity used for preservation of momentum equation $\Pi_{RCCS,Ri}$ and for energy equation temperature rise
- Common method is to neglect acceleration losses in momentum equation and equate simplified equation with temperature rise equation
- Solve ΔT and u_0 simultaneously

$$u_0 = \left(\frac{2\beta g L_{tc,RCCS} \rho_{avg} \dot{q}_{core}}{\rho_C^2 a_{RCCS} C_p \left(\frac{\rho_{avg} f_{down} l_c}{d_{hd} \rho_C} + \frac{f_{up} l_c}{d_{hu}} + K l_c \rho_{avg} \right)} \right)^{1/3}$$

$$\Delta T = \frac{\dot{q}_{core}}{\rho_C a_{RCCS} C_p u_0}$$

OSU
Oregon State
UNIVERSITY

HTTF RCCS Design

- Momentum equation Pi group preservation
  - $\Pi_{RCCS,acc}$ preserved by property similitude and RCCS temperature rise preservation
  - $\Pi_{RCCS,Ri}$ preserved by 1:4 length ratio and 1:56.85 flow area ratio
  - $\Pi_{RCCS,F}$ ratio ~1:4. Use of orifice plates and extra horizontal piping so ratio 1:1

OSU
Oregon State
UNIVERSITY

HTTF RCCS Design

- Energy equation preserved ratios
  - Radiation surface area from vessel, same as power ratio 1:113.7
  - RCCS flow area ratio: 1:56.85
  - Series thermal resistance: flexibility to choose from duct wall thickness, material, duct h_d, and duct surface area
  - Flexibility in choice of total number of ducts
  - Outer RCCS duct surface area ratio: 1:111.9

OSU
Oregon State
UNIVERSITY

HTTF RCCS Design

- Design for insulated outer vessel surface area design
- 18 ducts, in three groups of six around vessel
- Aspect ratio of 5.7, similar to VHTR RCCS aspect ratio of 5.0

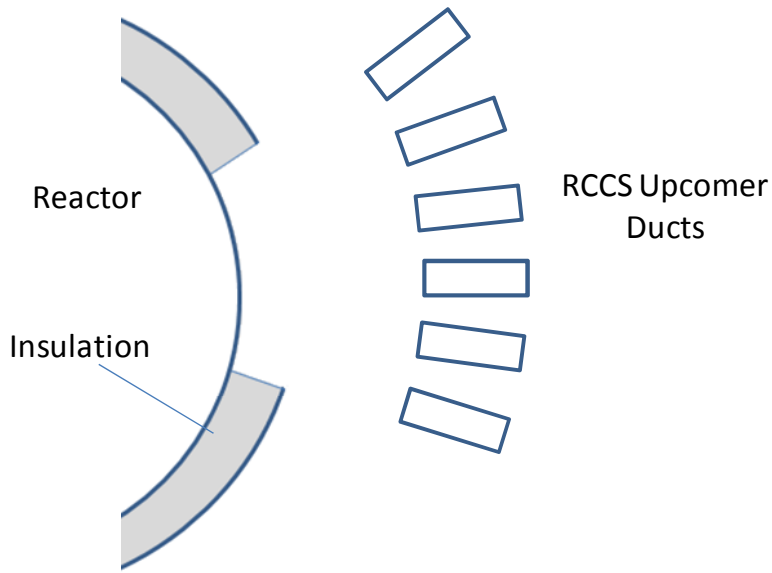

OSU
Oregon State
UNIVERSITY

Questions?

OSU
Oregon State
UNIVERSITY