CPNPP Mar 2009 NRC Written Examination
Reactor Operator
Answer Key

1.	C	26.	C	51.	B
2.	B	27.	A	52.	A
3.	A	28.	A	53.	D
4.	B	29.	D	54.	C
5.	A	30.	A	55.	C
6.	A	31.	D	56.	D
7.	B	32.	A	57.	C
8.	D	33.	C	58.	D
9.	C	34.	B	59.	C
10.	C	35.	A	60.	B
11.	B	36.	D	61.	C
12.	C	37.	D	62.	A
13.	D	38.	C	63.	B
14.	A	39.	C	64.	C
15.	C	40.	B	65.	D
16.	A	41.	B	66.	B
17.	D	42.	A	67.	A
18.	D	43.	C	68.	B
19.	B	44.	C	69.	B
20.	B	45.	D	70.	A
21.	D	46.	B	71.	D
22.	D	47.	A	72.	A
23.	A	48.	A	73.	B
24.	A	49.	D	74.	D
25.	B	50.	C	75.	A

Exam Answer Breakdown:

A. 21
B. 18
C. 18
D. 18

Examination Outline Cross-reference:

Level	RO	SRO
Tier #	2	
Group #	1	
K/A #	003 K5.04	
Importance Rating	3.2	

Reactor Coolant Pump System: Knowledge of the operational implications of the following concepts as they apply to the RCPs: Effects of RCP shutdown on secondary parameters, such as steam pressure, steam flow, and feed flow

Proposed Question: Common 1

Given the following conditions:

- Unit 1 is steady at 30% power when Reactor Coolant Pump #2 trips and causes a transient in Steam Generator #2.

Which ONE (1) of the following describes how steam flow and water level in Steam Generator #2 initially respond to the trip of Reactor Coolant Pump #2?

Initially, Steam Generator #2 steam flow _____ and level _____.

A. increases; increases

B. increases; decreases

C. decreases; decreases

D. decreases; increases

Proposed Answer: C

Explanation:

A. Incorrect. Plausible if thought that pressure dropped in Steam Generator #2 which caused a swell and level increase.
B. Incorrect. Plausible because Steam Generator level will decrease, however, steam flow will also decrease as the Steam Generator cools and Steam Generator pressure decreases.
C. Correct. Because the Steam Generator with the tripped Reactor Coolant Pump stops steaming, steam flow will decrease and Steam Generator level will also decrease due to shrink.
D. Incorrect. Plausible because steam flow will decrease, however, Steam Generator level will also decrease due to shrink.

Technical Reference(s) ABN-101, Step 2.3.1 Note
OP51.SYS.SN1.LN, Page 11

Attached w/ Revision # See Comments / Reference

Proposed references to be provided during examination: None

Learning Objective: OP51.SYS.MR1.OB14

STATE the physical connections and **EVALUATE** the cause-effect relationships between the Main Steam System and the following systems, components or events:

- Reactor Coolant System

Question Source:

Bank # SYS.RC1.OB15-17

Modified Bank # _____ (Note changes or attach parent)

New _____

Question History: Last NRC Exam September 2005 NRC Exam

Question Cognitive Level:

Memory or Fundamental Knowledge _____

Comprehension or Analysis X

10 CFR Part 55 Content:

55.41 5

55.43 _____

Comments / Reference: From ABN-101, Step 2.3.1 Note	Revision # 10

2.3 Operator Actions

ACTION/EXPECTED RESPONSE	RESPONSE NOT OBTAINED

[C]
CAUTION: A Reactor Coolant Pump shall NOT be started with the reactor in MODE 1 or 2.

NOTE:
- Diamond step 1 denotes Initial Operator Actions.
- With a Reactor Coolant Pump stopped, the affected loop will stop steaming.

◇1	Check Plant status	
☐	a. Verify Reactor - Tripped	a. Perform the Following:
☐	b. GO TO EOP-0.0A/B while other qualified operators continue with this procedure.	1) Trip Reactor AND GO TO EOP-0.0A/B while other qualified operators continue with this procedure. 2) GO TO Step 2.
☐ 2	Verify RCPs in loops with PRZR Spray Valves - RUNNING: • RCP 1 - Loop 1 • RCP 4 - Loop 4	a. Place affected PRZR Spray Valve controller in MANUAL AND close spray valve. b. IF spray valve can not be closed, THEN stop RCP(s) as necessary to stop spray flow.
☐ 3	Refer to Technical Specifications listed in Section 10.1	
☐ 4	Verify at least ONE RCP - RUNNING	IF no RCPs running in Mode 3, 4 or 5, THEN perform Attachment 3.

Comments / Reference: From OP51.SYS.SN1.LN, Page 11	Revision # 06/11/07

STEAM GENERATOR SHRINK AND SWELL

The phenomenon of "shrink" and "swell" complicates setpoint selection. Shrink" and "swell" are terms used to describe steam generator level response to changes in dynamic operating conditions. "Shrink" is most often used to describe the observed decrease in steam generator level associated with a sudden decrease in power while "swell" is most often used to describe the observed increase in steam generator level associated with a sudden increase in power.

Factors influencing indicated steam generator level also influence the magnitude and duration of shrink and swell. A steam generator designed for a higher circulation ratio will minimize both magnitude and duration of shrink and swell. In other words, a steam generator designed to have less resistance to flow will have a higher circulation (recirculation) ratio, a lower void fraction (which is a function of power) and smaller effects on shrink and swell during power changes.

As recirculation ratio decreases, a higher void fraction is indicated since the quality of steam exiting the U-tube bundle is increasing. With a higher void fraction, even small pressure changes can cause variations in indicated steam generator level since the water in the tube bundle area is in a saturated nucleate boiling condition. If steam pressure were to suddenly drop, the response inside the tube bundle would be an immediate phase change to a wet vapor. More moisture is entrained as the steam exits the tube bundle into the primary separators. A marked increase in the amount of moisture being returned to the downcomer causes an increase in steam generator level.

When a large, rapid load decrease occurs, steam flow is suddenly reduced, increasing steam pressure, which actually suspends the boiling process. During this time, feedwater flow exceeds steam flow. Steam generator riser region level decreases due to a decreasing void fraction. Decreasing void fraction decreases two-phase flow velocities and a pressure drop in the steam generator circulation loop. Because of the decrease in steam generator circulation loop pressure drop, downcomer flow temporarily increases (to equalize downcomer / riser section hydrostatic pressures) and since less moisture is being returned to the downcomer (because of the sudden reduction in steam flow), steam generator level decreases. This phenomenon will continue until steam generator circulation loop conditions stabilize with feedwater flow and steam flow balanced.

When a rapid load increase occurs, steam flow from the steam generator is suddenly increased, decreasing steam pressure. During this time, steam flow exceeds feedwater flow. However, the riser region water level does not fall as might be expected, but rather it rises due to the increasing void fraction. Increasing void fraction increases two-phase flow velocities and the steam generator circulation loop pressure drop and more moisture is entrained with the steam exiting the tube bundle. Because of the increase in the steam generator circulation loop pressure drop, downcomer flow temporarily decreases (to equalize downcomer / riser section hydrostatic pressures) and since more moisture is being returned to the downcomer (because of the sudden increase in moisture entrainment), steam generator level increases. This response is the phenomenon known as swell and will continue until steam generator circulation loop conditions stabilize with feedwater flow and steam flow balanced.

Examination Outline Cross-reference:

Level	RO	SRO
Tier #	2	
Group #	1	
K/A #	004 A1.10	
Importance Rating	3.7	

Chemical and Volume Control System: Ability to predict and/or monitor changes in parameters (to prevent exceeding design limits) associated with operating the CVCS controls including: Reactor power

Proposed Question: Common 2

Given the following conditions:

- Unit 1 is at 30% power during Middle-of-Life (MOL) conditions.
- Steam Dump System is in AUTO in the STEAM PRESSURE Mode.

Which ONE (1) of the following will occur if 1-TK-130, Letdown Heat Exchanger Outlet Temperature Control Valve fails open?

A. RCS temperature will lower adding positive reactivity to the core and causing Reactor power to rise.

B. RCS boron concentration will lower adding positive reactivity to the core and causing Reactor power to rise.

C. RCS temperature will rise adding negative reactivity to the core and causing Reactor power to lower.

D. RCS boron concentration will rise adding negative reactivity to the core and causing Reactor power to lower.

Proposed Answer: B

Explanation:

A. Incorrect. Plausible because an RCS temperature decrease with the core at MOL conditions will add positive reactivity and cause Reactor power to rise, however, this condition is not created by a lowering of Letdown temperature.

B. Correct. A lowering of Letdown temperature will result in an increase in boron absorption by the demineralizer resin. This is seen as a dilution by the Reactor Coolant System which adds positive reactivity and causes Reactor power to rise.

C. Incorrect. Plausible because an RCS temperature increase with the core at MOL conditions will add negative reactivity and cause Reactor power to lower, however, this condition is not created by a lowering of Letdown temperature.

D. Incorrect. Plausible because this condition would occur if the Letdown Temperature Control Valve had failed closed. This would result in a rise in Letdown temperature which causes a decrease in boron absorption by the demineralizer resin. This would be seen as a boration by the Reactor Coolant System which adds negative reactivity and causes Reactor power to lower.

Technical Reference(s) SOP-103A, Section 3.0, Precautions Attached w/ Revision # See Comments / Reference

Proposed references to be provided during examination: None

Learning Objective: OP51.SYS.CS1.OB10 **STATE** the physical connections and **EVALUATE** the cause-effect relationships between the CVCS and the following systems, components or events:

- Reduction of boron concentration via letdown flow and its effects on reactor operation

Question Source: Bank # _____
Modified Bank # _____ (Note changes or attach parent)
New X

Question History: Last NRC Exam _____

Question Cognitive Level: Memory or Fundamental Knowledge _____
Comprehension or Analysis X

10 CFR Part 55 Content: 55.41 5
55.43 _____

Comments / Reference: From SOP-103A, Section 3.0, Precautions	Revision # 17

CPNPP SYSTEM OPERATING PROCEDURE MANUAL	UNIT 1	PROCEDURE NO. SOP-103A
CHEMICAL AND VOLUME CONTROL SYSTEM	REVISION NO. 17	PAGE 7 OF 131

3.0 PRECAUTIONS

- An explosive mixture of oxygen and hydrogen in the Volume Control Tank and/or PDP suction stabilizer should be avoided at all times. Oxygen content in the tank and stabilizer should not exceed 5% by volume when hydrogen is present.
- During normal operation Volume Control Tank pressure should be maintained high enough to provide a minimum back pressure of 15 psig on the Reactor Coolant Pump Seals. During degas operation, VCT pressure shall be maintained ≥10 psig to prevent reverse pressurization of the RCP number 2 seals. Reverse pressurization could result in RCP seal damage.
- After any significant change in letdown and charging flow, the reactor coolant pump seal injection flows should be checked and adjusted if necessary.
- To avoid thermal shock of the reactor coolant piping when operating at elevated temperature, charging flow should first be preheated in the regenerative heat exchanger. Letdown flow should not be stopped without also reducing charging flow to maintain RCP seal injection only when RCS cold leg temperature is > 350°F.
- Pressure downstream of the letdown orifices should be maintained greater than saturation pressure to preclude flashing of the letdown coolant before it enters the letdown heat exchanger.
- When placing a standby demineralizer in service, care should be taken to avoid the insertion of positive reactivity due to absorption of boron in the bed.

[C]
- RCP seal injection shall be maintained any time RCS level is above the seal package (84 inches above core plate 830'0") unless the RCPs are on the backseat.
- Demineralizer resins should be maintained wet per RWS-302.
- The CCP alternate miniflow piping must be filled and vented to ensure the relief valves are not damaged by water hammer in the event of an SI actuation.
- Operation of Demineralizers and associated flow paths has the potential to change RCS Boron Concentration which directly affects Reactivity. Prior to performing evolutions affecting Demineralizers and associated flow paths, ensure all potential effects of the evolution (including potential dilution or boration) are considered.
- When placing a Demineralizer in service, minor RCS temperature changes of approximately 0.5°F may be expected. Minor changes in temperature may occur even for a saturated demin which has recently been in service. This is due to the daily change in RCS boron concentration and the minor delta that develops to the demin piping boron.
- Charging pump suction should normally remain aligned to the VCT due to dissolved oxygen concerns when suction comes from the RWST. When entering a plant outage, suctions should NOT be rolled to the RWST prior to crud burst. When time allows, Chemistry should be notified prior to rolling suction to the RWST.

Examination Outline Cross-reference:

Level	RO	SRO
Tier #	2	
Group #	1	
K/A #	005 G 2.4.3	
Importance Rating	3.7	

Residual Heat Removal System: Emergency Procedures/Plan: Ability to identify post-accident instrumentation

Proposed Question: Common 3

Which ONE (1) of the following identifies how instrumentation used for operation of the Residual Heat Removal System in a post-accident condition can be identified?

Post-accident Residual Heat Removal instrumentation is identified by...

A. black labels with white lettering.

B. blue labels with white lettering.

C. white labels with blue lettering.

D. white labels with black lettering.

Proposed Answer: A

Explanation:

A. Correct. This is the method used at CPNPP to identify a post-accident instrumentation in accordance with Regulatory Guide 1.97.
B. Incorrect. Plausible because this marking is used for controlling “channel” labels.
C. Incorrect. Plausible because this marking is used for “information” labels.
D. Incorrect. Plausible because this is the inverse of the correct answer.

Technical Reference(s) OP.SYS.PA1.LN, Page 9
OWI-402, Attachment 8.A
Attached w/ Revision # See Comments / Reference

Proposed references to be provided during examination: None

Learning Objective: LO21.ERG.XDB.OB002 **DESCRIBE** how instrumentation qualified for post accident monitoring is designated on the Main Control Board.

Question Source: Bank # ERG.XDB.OB02-3
Modified Bank # _____ (Note changes or attach parent)
New _____

Question History: Last NRC Exam _____

Question Cognitive Level: Memory or Fundamental Knowledge X

Comprehension or Analysis

10 CFR Part 55 Content: 55.41 7
55.43

Comments / Reference: From OP.SYS.PA1.LN, Page 9	Revision # 06/20/00
All Reg Guide 1.97 instruments have black labels with white lettering but not all instruments with black labels are required by Tech Spec 3.3.3.	

Comments / Reference: From OWI-402, Attachment 8.A	Revision # 4

CPSES OPERATIONS DEPARTMENT WORK INSTRUCTION MANUAL		PROCEDURE NO. OWI-402
LABEL STANDARD GUIDE	REVISION NO. 4	PAGE 16 OF 22

ATTACHMENT 8.A
PAGE 1 OF 2

- Label Overall Color Coding

General Application	Background	Text
Handswitches	White	Black
Fire Protection	Red	White
Temporary Modification	Purple	Black (White may be used as necessary for plastic labels)
Caution	Yellow	Black
Danger/Warning	White	Black with red highlight **
Notice	White	Black with blue highlight**
Safety	White	Black with green highlight**
Radiation Signs	Yellow	Black with magenta highlight**
Status Labels (OWI-109)*		
• OUT OF SERVICE	Pink	Black
• THROTTLED	Blue	White
• CONTROLLING CHANNEL	Blue	White
• TEST IN PROGRESS	Pink	Black
• MANUAL	Pink	Black
• H_2 or N_2	Blue	White

Examination Outline Cross-reference:	Level	RO	SRO
	Tier #	2	
	Group #	1	
	K/A #	006 K4.27	
	Importance Rating	2.7	

Emergency Core Cooling System: Knowledge of ECCS design features and/or interlocks which provide for the following: Alarm for misalignment of the accumulator isolation valve

Proposed Question: Common 4

Which ONE (1) of the following are the pressure setpoint and valve position which actuate 1-ALB-4C-1.1, ACCUM 1 INJ VLV 8808A NOT OPEN in the Control Room?

Pressurizer pressure...

A. greater than 1000 psig and valve is off its fully closed seat.

B. greater than 1960 psig and valve is off its fully open seat.

C. less than 1000 psig and valve is off its fully open seat.

D. less than 1960 psig and valve is off its fully closed seat.

Proposed Answer: B

Explanation:

A. Incorrect. Plausible because procedurally the valve should be opened prior to going above 1000 psig, however, the alarm does not come in until P-11 is exceeded.
B. Correct. These are the correct parameters per ALM-0043A.
C. Incorrect. Plausible because valve being off the open seat is correct and procedurally the valve should be opened prior to going above 1000 psig, however, the alarm does not come in until P-11 is exceeded.
D. Incorrect. Plausible because the pressure setpoint is correct, however, the valve must be off its open seat.

Technical Reference(s) ALM-0043A, 1-ALB-4C-1.1
Electrical Print E1-0062, Sheet 16
Attached w/ Revision # See Comments / Reference

Proposed references to be provided during examination: _____

Learning Objective: OP51.SYS.SI1.OB08

LIST and **EXPLAIN** the Emergency Core Cooling System design features which provide for the trips, permissives and interlocks associated with the following:

- SI Accumulator Isolation Valves 8808A, B, C, and D

Question Source:

Bank # _____

Modified Bank # _____ (Note changes or attach parent)

New X

Question History: Last NRC Exam _____

Question Cognitive Level:

Memory or Fundamental Knowledge _____

Comprehension or Analysis X

10 CFR Part 55 Content:

55.41 7

55.43 _____

Comments / Reference: From ALM-0043A, 1-ALB-4C- 1.1	Revision # 6

CPSES ALARM PROCEDURES MANUAL	UNIT 1	PROCEDURE NO. ALM-0043A
ALARM PROCEDURE 1-ALB-4C	REVISION NO. 6	PAGE 7 OF 77

ANNUNCIATOR NOM./NO.: **ACCUM 1 INJ VLV 8808A NOT OPEN** 1.1

PROBABLE CAUSE:

1-8808A, SI ACCUM 1-01 INJ VLV malfunction
Pressurizer pressure >1960 psig (P-11) AND Safety Injection Accumulators NOT required to be operable

> NOTE: 69/1-8808A, PWR LOCK OUT, must be ON to close accumulator isolation valve. Valve may be opened with 69/1-8808A in ON or OFF.

AUTOMATIC ACTIONS:

1-8808A, SI ACCUM 1-01 INJ VLV will open at P-11 PRZR PRESS PERM.

> NOTE: 1-8808A automatically opens on Safety Injection. Valve can NOT be closed from Main Control Board until Safety Injection has been reset.

OPERATOR ACTIONS:

1. With Reactor in Mode 1, 2, or 3 AND RCS pressure >1000 psig, open 1/1-8808A, ACCUM 1 INJ VLV
2. Refer to TS 3.5.1.
3. Ensure 1/1-8808A, ACCUM 1 INJ VLV is open.

> NOTE: Valve position indication is provided at MCC. If both lights are off, valve indicates an intermediate position.

4. If handswitch lights are off, dispatch an operator to 1EB3-2/6F/BKR-1 and 1EB3-2/6F/BKR-2 to ensure breakers are ON.
5. Open 1/1-8808A, ACCUM 1 INJ VLV.
6. Verify 1-MLB-1A-2, 1.8, ACCUM 1 INJ NOT OPEN 1-8808A is dark.
7. If 1-8808A is NOT open AND conditions permit, perform a Containment entry per STA-620 to fully open valve.

Comments / Reference: From ALM-0043A, 1-ALB-4C- 1.1 Logic Diagram	Revision # 6

CPSES ALARM PROCEDURES MANUAL	UNIT 1	PROCEDURE NO. ALM-0043A
ALARM PROCEDURE 1-ALB-4C	REVISION NO. 6	PAGE 6 OF 77

ANNUNCIATOR NO.: 1.1

LOGIC:

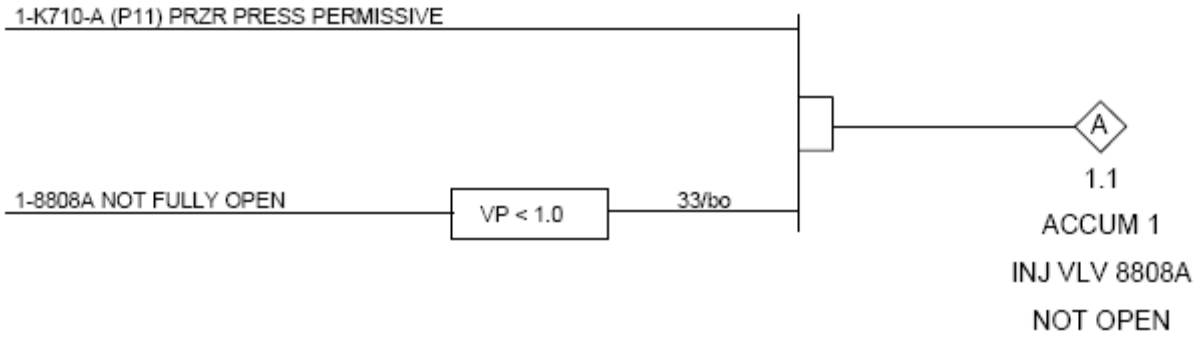

Comments / Reference: From Electrical Print E1-0062, Sheet 16	Revision # CP-6

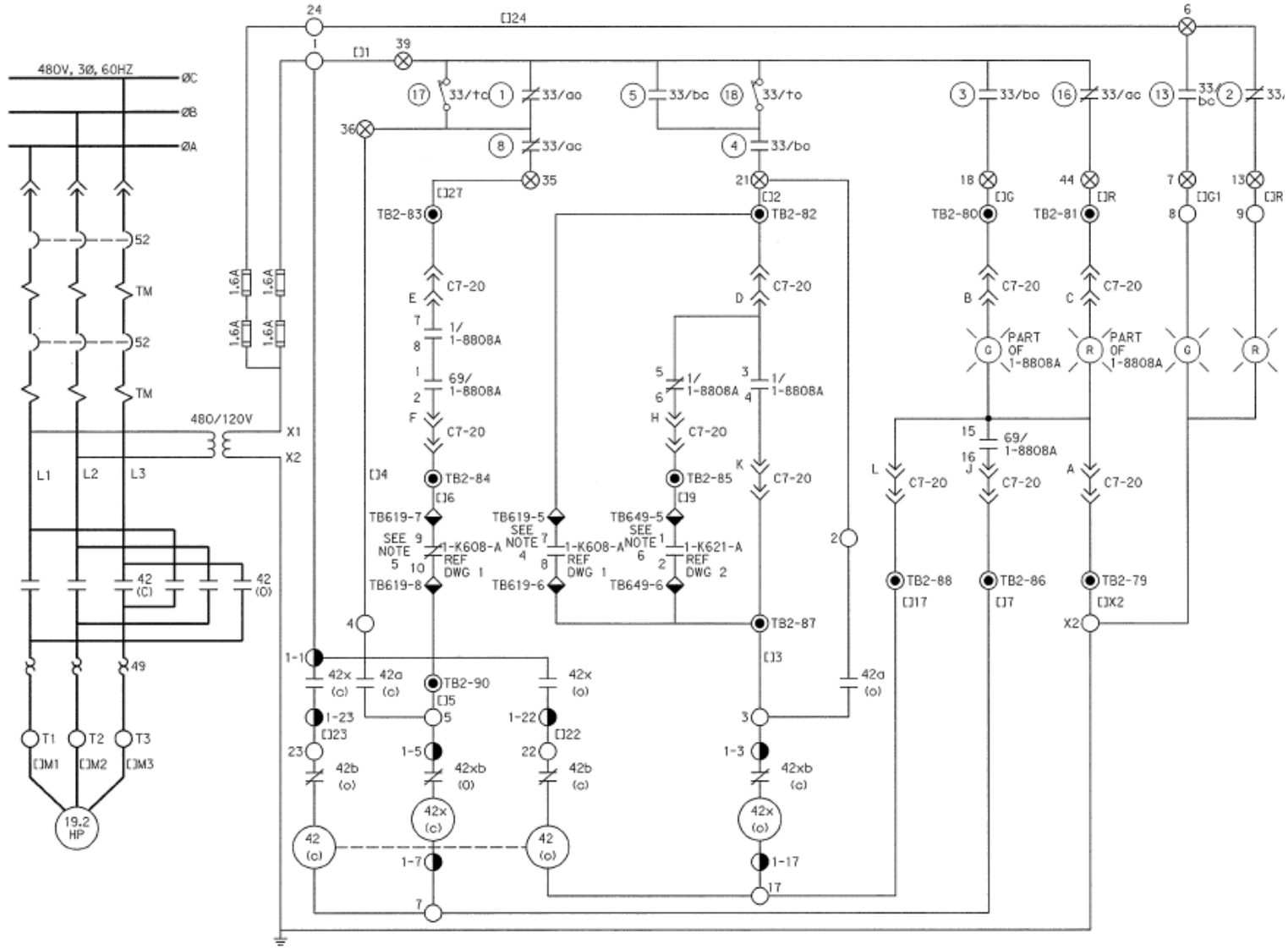

Examination Outline Cross-reference:	Level	RO	SRO
	Tier #	2	
	Group #	1	
	K/A #	006 K6.13	
	Importance Rating	2.6	

Emergency Core Cooling System: Knowledge of the effect of a loss or malfunction on the following will have on the ECCS: Pumps

Proposed Question: Common 5

Given the following conditions:

- A Large Break Loss of Coolant Accident has occurred inside Unit 1 Containment.
- Reactor Coolant System and Containment pressure are both approximately 30 psig.
- Component Cooling Water (CCW) Pump 1-01 has tripped.
- CCW Trains are split and **CANNOT** be cross-tied.

Which ONE (1) of the following describes the effect of these events on the Modes of Emergency Core Cooling operation of the Residual Heat Removal (RHR) System?

A. Train A RHR can be operated in the Injection Mode ONLY.
Train B RHR can be operated in BOTH the Injection Mode and Cold Leg Recirculation Mode.

B. Train A RHR can be operated in the Injection Mode ONLY.
Train B RHR can be operated in the Injection Mode and the Cold Leg Recirculation Mode if the RHR Trains are cross-tied.

C. Train A RHR can be operated in the Injection Mode and the Cold Leg Recirculation Mode if the RHR Trains are cross-tied.
Train B RHR can be operated in BOTH the Injection Mode and Cold Leg Recirculation Mode.

D. Train A RHR can be operated in the Injection Mode and the Cold Leg Recirculation Mode if the RHR Trains are cross-tied.
Train B RHR can be operated in the Injection Mode and the Cold Leg Recirculation Mode if the RHR trains are cross-tied.

Proposed Answer: A

Explanation:

A. Correct. Train B RHR can be operated in any Mode available since CCW flow is available. Train A RHR can only be operated when the water temperature being pumped is ≤ 120°F. The RWST, used in the Injection Mode, is maintained below this temperature, but the Containment Sump water used for recirc will be higher than this limit and Train A RHR cannot be operated in recirc without CCW.

B. Incorrect. Plausible because Train A RHR can only be operated in the Injection Mode, but Train B can be operated in injection or recirc mode since it has CCW available.

C. Incorrect. Plausible because Train B RHR can be operated in the Injection or Recirculation Mode since it has CCW available, but Train A can only be operated in the Injection Mode without CCW available.

D. Incorrect. Plausible because both Trains of RHR can be operated in the Injection Mode, but only Train B RHR can be operated in the Recirculation Mode.

Technical Reference(s) EOS-1.3A, Attachment 3, Step 2 Bases
FRC-0.1A, Step 1 Caution
Attached w/ Revision # See Comments / Reference

Proposed references to be provided during examination: None

Learning Objective: OP51.SYS.RH1.OB15 **STATE** the physical connections and **EVALUATE** the cause-effect relationship between the Residual Heat Removal System and the following systems, components or events:

- CCW System

Question Source: Bank # SYS.RH1.OB15-2
Modified Bank # _____ (Note changes or attach parent)
New _____

Question History: Last NRC Exam _____

Question Cognitive Level: Memory or Fundamental Knowledge _____
Comprehension or Analysis X

10 CFR Part 55 Content: 55.41 7, 10
55.43 _____

Comments / Reference: From EOS-1.3A, Attachment 3, Step 2 Bases	Revision # 8

CPSES EMERGENCY RESPONSE GUIDELINES	UNIT 1	PROCEDURE NO. EOS-1.3A
TRANSFER TO COLD LEG RECIRCULATION	REVISION NO. 8	PAGE 37 OF 53

ATTACHMENT 3
PAGE 1 OF 17

BASES

CAUTION: Since the amount of water in the RWST between the switchover setpoint and the empty point is limited, the realignment of ECCS to cold leg recirculation must be done as quickly as possible.

A suction source of water for the ECCS pumps must be maintained to provide for core cooling. The actions of these first three steps must be completed even if challenges to a Critical Safety Function or Foldout Page criteria occur at this time, since these steps relate to the maintenance of core cooling.

If cold leg recirculation cannot be established or maintained, the operator is instructed to transition to ECA-1.1A, LOSS OF EMERGENCY COOLANT RECIRCULATION, before the completion of these steps. If a transition out of EOS-1.3A to ECA-1.1A is made, the Status Trees should be monitored and the caution no longer applies. A transition to ECA-1.1A is only permitted if neither a RED nor an ORANGE condition is detected on the Status Trees. The order of priority in this case is the switchover steps in EOS-1.3A identified in the caution, RED or ORANGE path FRGs if a transition out of EOS-1.3A occurs before the completion of these steps, then ECA-1.1A.

STEP 1: In order to realign or stop safeguards equipment, a deliberate action must be taken to reset the SI signal.

STEP 2: The RHR and CS heat exchangers are used for heat removal during the post accident recirculation phase and CCW flow should have already been established to the RHR and Containment Spray heat exchangers. If CCW flow has not previously been established, then it should be established at this time.

If CCW cannot be established to one heat exchanger, the remaining procedure steps can be performed as listed provided that the uncooled recirculation fluid temperature and pressure do not exceed equipment design conditions. RHR pumps should not pump water greater than 120°F without CCW to the RHR System.

Comments / Reference: From FRC-0.1A, Step 1 Caution	Revision # 8

CPSES EMERGENCY RESPONSE GUIDELINES	UNIT 1	PROCEDURE NO. FRC-0.1A
RESPONSE TO INADEQUATE CORE COOLING	REVISION NO. 8	PAGE 3 OF 44

STEP	ACTION/EXPECTED RESPONSE	RESPONSE NOT OBTAINED
	CAUTION: RHR pumps should not pump water greater than 120°F without CCW to the RHR system.	
1	Check RWST Level - GREATER THAN LO-LO LEVEL	Go to EOS-1.3A, TRANSFER TO COLD LEG RECIRCULATION.
2	Verify ECCS Valve Alignment - PROPER EMERGENCY ALIGNMENT PER ATTACHMENT 2	Manually align valves as necessary.

Examination Outline Cross-reference:	Level	RO	SRO
	Tier #	2	
	Group #	1	
	K/A #	007 G 2.4.31	
	Importance Rating	4.2	

Pressurizer Relief/Quench Tank System: Emergency Procedures/Plan: Knowledge of annunciator alarms, indications, or response procedures

Proposed Question: Common 6

Given the following conditions:

- Annunciator 1-ALB-05B-2.3, PRT HI TEMP, has just alarmed.

Which ONE (1) of the following describes how the Pressurizer Relief Tank (PRT) is normally cooled, in accordance with SOP-110A, Reactor Coolant Drain Tank System?

A. Recirculate the PRT through the Reactor Coolant Drain Tank heat exchanger, using Component Cooling Water to cool the heat exchanger.

B. Recirculate the PRT through the Reactor Coolant Drain Tank heat exchanger, using Reactor Makeup Water to cool the heat exchanger.

C. Drain the PRT to the Reactor Coolant Drain Tank while making up to the PRT from the Demineralized Water Storage Tank.

D. Drain the PRT to the Reactor Coolant Drain Tank while making up to the PRT from the Reactor Makeup Water Storage Tank.

Proposed Answer: A

Explanation:

A. Correct. The procedure used to cool the PRT is SOP-110A, Reactor Coolant Drain Tank System. The reference includes the steps required to cool the PRT which encompasses the NOTE at the end of step 5.4.l stating that “The PRT is now recirculating in the cooldown mode.”
B. Incorrect. Plausible because the Reactor Coolant Drain Tank (RCDT) heat exchanger is used, however, use of Reactor Makeup Water would generate radioactive waste which is undesirable.
C. Incorrect. Plausible because there is a flowpath from the PRT to the RCDT, however, this method would generate waste which is undesirable.
D. Incorrect. Plausible because there is a flowpath from the PRT to the RCDT, however, this method would generate waste which is undesirable.

Technical Reference(s) ALM-0052A, 1-ALB-05B-2.3
SOP-109A, Section 4.2, Notes
PO21.SYS.RC4, Figure 2
SOP-110A, Section 5.4

Attached w/ Revision # See Comments / Reference

Proposed references to be provided during examination: None

Learning Objective: OP51.SYS.RC1.OB02

STATE the function and operation of the following Reactor Coolant System components, flowpaths and features:

- Pressurizer Relief Tank

Question Source: Bank # SYS.RC1.OB02-25
Modified Bank # _____ (Note changes or attach parent)
New _____

Question History: Last NRC Exam _____

Question Cognitive Level: Memory or Fundamental Knowledge X
Comprehension or Analysis _____

10 CFR Part 55 Content: 55.41 3, 10
55.43 _____

Comments / Reference: From SOP-109A, Section 4.2, Notes | Revision # 12

CPSES SYSTEM OPERATING PROCEDURE MANUAL	UNIT 1	PROCEDURE NO. SOP-109A
PRESSURIZER RELIEF TANK	REVISION NO. 12	PAGE 6 OF 49

4.2 Notes

- Steps to lower PRT level or cooldown the PRT are contained in SOP-110A.
- The PRT design pressure is 100 psig.
- The PRT is protected from overpressure by two rupture disks designed to rupture at 91 psig.

Comments / Reference: From ALM-0052A, 1-ALB-05B-2.3	Revision # 5

CPSES ALARM PROCEDURES MANUAL	UNIT 1	PROCEDURE NO. ALM-0052A
ALARM PROCEDURE 1-ALB-5B	REVISION NO. 5	PAGE 28 OF 72

ANNUNCIATOR NOM./NO.: **PRT TEMP HI** **2.3**

PROBABLE CAUSE:

Relief valve discharge
High Containment temperature

AUTOMATIC ACTIONS: None

OPERATOR ACTIONS:

1. Verify 1-LI-470, PRT LVL, is between 64% and 74%.
   A. IF level is >74%, THEN reduce level per SOP-109A for PRT Level Control and Cooldown.
   B. IF trending in PRT pressure, temperature or level indicates a step increase in PRT inleakage, THEN perform OPT-303.

2. Verify 1-PI-469, PRT PRESS, is <8 psig.
   A. IF pressure is ≥8 psig, THEN reduce pressure per SOP-109A for Pressure Adjustments in the PRT.

3. Verify Pressurizer PORV and Safety Valve outlet temperatures are stable.
   - 1-TI-463, PRZR PORV OUT TEMP
   - 1-TI-465, PRZR SFTY VLV B OUT TEMP
   - 1-TI-464, PRZR SFTY VLV C OUT TEMP
   - 1-TI-466, PRZR SFTY VLV A OUT TEMP

4. Verify 1-TI-468, PRT TEMP, is stable.
   A. If PRT level is <74%, open 1/1-8045, RMUW TO PRT SPLY VLV, to return level to 74%.
   B. IF PRT temperature remains ≥113°F, THEN cooldown PRT per SOP-109A for PRT Level Control and Cooldown.

Comments / Reference: From PO21.SYS.RC4, Figure 2	Revision # 01/25/05

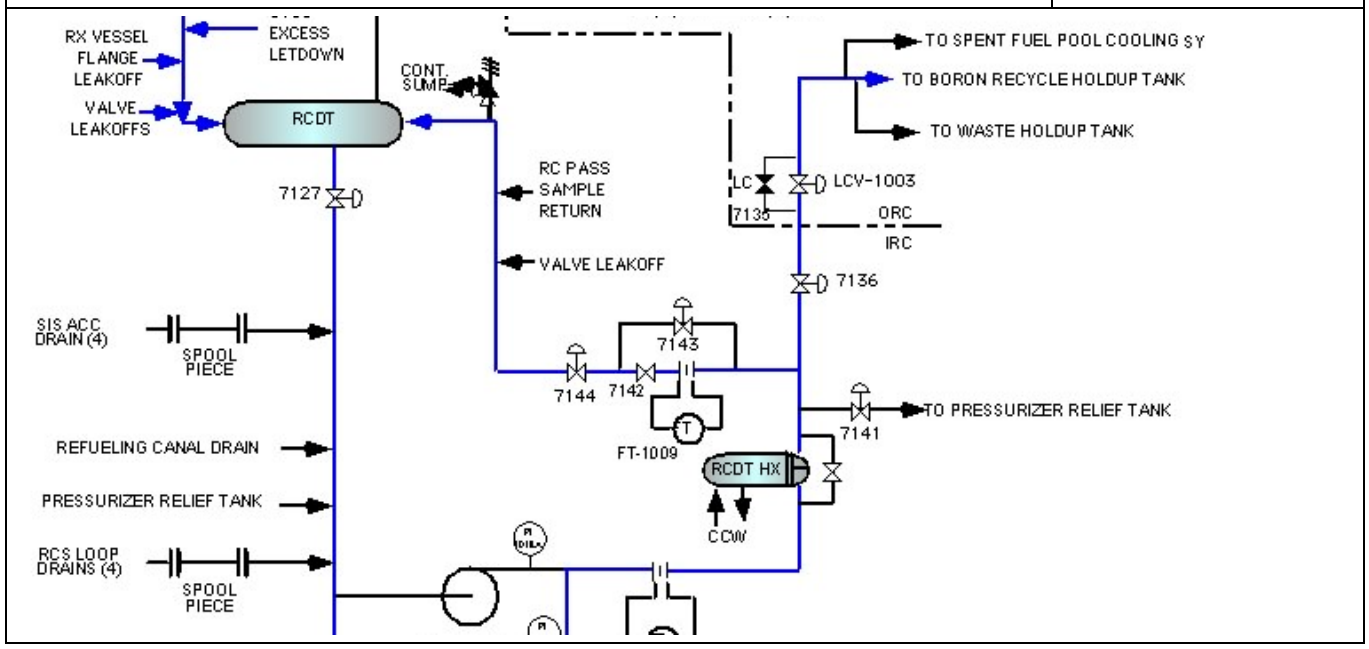

Comments / Reference: From SOP-110A, Section 5.4	Revision # 9

CPNPP SYSTEM OPERATING PROCEDURE MANUAL	UNIT 1	PROCEDURE NO. SOP-110A
REACTOR COOLANT DRAIN TANK SYSTEM	REVISION NO. 9	PAGE 12 OF 56

5.4 Pressurizer Relief Tank Cooling Or RCDT Pump Initial Start Following Maintenance

This section describes the steps required to cool the PRT contents when an emergency cooldown is NOT required. This method eliminates addition of makeup water which must be processed and assumes cooldown can be completed within eight (8) hours.
This section may also be used to complete filling the RCDT pump discharge piping following maintenance. Before performing this section to fill dynamically, a static fill of the isolated section should be performed as part of the clearance restoration.

NOTE:
- Unless specified otherwise, all valves are operated at the Aux. Bldg 790' Liquid Waste Processing Panel (LPP).
- A Radiation Work Permit may be required for this evolution.

☐ A. Ensure the RCDT System is in normal operation per Section 5.2.

NOTE:
- The operating RCDT Pump will trip at 20% RCDT level.
- If the amount of influent to the RCDT will not require it to be pumped while the system is re-aligned, the following step may be N/A'd.

B. IF desired, THEN reduce RCDT level to 25% as follows:

☐ 1) Take manual control of RCDT level per Section 5.12.

☐ 2) Reduce RCDT level to 25%.

C. Perform the following:

1) STOP the operating RCDT Pump:

☐ • 1-HS-1003A, RCDT PUMP 1-01

☐ • 1-HS-1003B, RCDT PUMP 1-02

2) CLOSE the following valves:

☐ • 1-HS-1003C, RCDT PUMP SUCTION ISOL (valve 1-7127)

☐ • 1-HS-1003F, RCDT RECIRC ISOL (valve 1-7144)

NOTE: Communication between the LPP and the Control Room is required to reduce PRT level.

☐ D. OPEN 1/1-8031, PRT DRN VLV. (CB-05)

Comments / Reference: From SOP-110A, Section 5.4	Revision # 9

CPNPP SYSTEM OPERATING PROCEDURE MANUAL	UNIT 1	PROCEDURE NO. SOP-110A
REACTOR COOLANT DRAIN TANK SYSTEM	REVISION NO. 9	PAGE 13 OF 56

5.4

CAUTION: Opening valve 1-7135 during MODES 1, 2, 3 or 4 results in an LCO per TS 3.6.3.

NOTE:
- The maximum flowrate through 1-LCV-1003, LWPS RCDT 1-01 LVL CTRL VLV, is 80 gpm. Higher flow rates may be obtained by opening 1-7135.
- The maximum allowable flow through the RCDT Heat Exchanger is 120 gpm.

E. IF the PRT level needs to be reduced, THEN perform the following:

1) Align a discharge path for the RCDT as follows:

[R] ☐ • Fully OPEN 1-LC-1003, REACTOR COOLANT DRAIN TANK LEVEL CONTROLLER UNIT 1, per Section 5.12 OR unlock and OPEN 1-7135, LWPS RCDT 1-01 LVL CTRL VLV BYP VLV (Sfgds 810' N. Penet Room)

☐ • IF flow greater than 120 gpm is desired, THEN bypass the RCDT Heat Exchanger per Section 5.9.

2) START the desired RCDT Pump:

☐ • 1-HS-1003A, RCDT PUMP 1-01

☐ • 1-HS-1003B, RCDT PUMP 1-02

[R] ☐ 3) Operate 1-LC-1003 as necessary per Section 5.12 OR throttle 1-7135, LWPS RCDT 1-01 LVL CTRL VLV BYP VLV, to reduce PRT level.

4) WHEN the desired PRT level is established, THEN STOP the operating RCDT pump.

☐ • 1-HS-1003A, RCDT PUMP 1-01

☐ • 1-HS-1003B, RCDT PUMP 1-02

☐ 5) Ensure 1-LC-1003, REACTOR COOLANT DRAIN TANK LEVEL CONTROLLER UNIT 1 is CLOSED per Section 5.12.

[IV][R] ☐ 6) IF opened in step 5.4.E.1), THEN CLOSE and Lock 1-7135, LWPS RCDT 1-01 LVL CTRL VLV BYP VLV.

☐ 7) IF previously bypassed, THEN ensure the RCDT Heat Exchanger is returned to service per Section 5.10.

☐ F. CLOSE 1/1-7136, RCDT DRN ISOL VLV (IRC). (CB-05)

☐ G. OPEN 1-HS-1003D, RCDT TO PRT ISOL. (valve 1-7141)

Comments / Reference: From SOP-110A, Section 5.4	Revision # 9

CPNPP SYSTEM OPERATING PROCEDURE MANUAL	UNIT 1	PROCEDURE NO. SOP-110A
REACTOR COOLANT DRAIN TANK SYSTEM	REVISION NO. 9	PAGE 14 OF 56

5.4 H. START the desired RCDT Pump:

- ☐ 1-HS-1003A, RCDT PUMP 1-01
- ☐ 1-HS-1003B, RCDT PUMP 1-02

[R] I. If the selected RCDT pump has been started following maintenance, adjust flow to approximately 110 gpm as indicated on 1-FI-1008, LWPS REACTOR COOLANT DRAIN TANK PMP 1-01/1-02 DISCHARGE FLOW INDICATOR for the selected pump as follows:

- ☐ Throttle 1-7134A, LWPS RCDT 1-01 PMP 1-01 DISCH THROT VLV.
- ☐ Throttle 1-7134B, LWPS RCDT 1-01 PMP 1-02 DISCH THROT VLV.

NOTE: The PRT is now recirculating in the cooldown mode.

Examination Outline Cross-reference:

Level	RO	SRO
Tier #	2	
Group #	1	
K/A #	007 G 2.4.49	
Importance Rating	4.6	

Pressurizer Relief/Quench Tank System: Emergency Procedures/Plan: Ability to perform without reference to procedures those actions that require immediate operation of system components and controls

Proposed Question: Common 7

Which ONE (1) of the following Initial Operator Actions is required when the controlling Pressurizer Pressure Channel PI-455A fails to 2300 psig?

A. Transfer 1/1-455F, PRZR PRESS CTRL CHAN SELECT to alternate channel.

B. Place 1-PK-455A, PRZR MASTER PRESS CTRL in MANUAL.

C. Close 1/1-8000A, PRZR PORV Block Valve.

D. Close 1/1-PCV-455A, PRZR PORV Valve.

Proposed Answer: B

Explanation:

A. Incorrect. Plausible because this action is required, however, it is not an Initial Operator Action.
B. Correct. This is an Initial Operator Action per ABN-705.
C. Incorrect. Plausible because this is an RNO action in the event the associated PORV opens, however, this information is not divulged in the Stem.
D. Incorrect. Plausible because it could be thought that the valve needed to be closed, however, the PORV should not open.

Technical Reference(s) ABN-705, Section 2.3 Attached w/ Revision # See Comments / Reference

Proposed references to be provided during examination: None

Learning Objective: **ANALYZE** the indications and **DESCRIBE** the mitigation strategy for the following procedures as they affect the Pressurizer Pressure and Level Control system:

- ABN-705, Pressurizer Pressure Malfunction

Question Source:	Bank #		
	Modified Bank #		(Note changes or attach parent)
	New	X	

Question History: Last NRC Exam

Question Cognitive Level: Memory or Fundamental Knowledge

Comprehension or Analysis X

10 CFR Part 55 Content: 55.41 10

55.43

Comments / Reference: From ABN-705, Section 2.3	Revision # 12

CPNPP ABNORMAL CONDITIONS PROCEDURES MANUAL	UNIT 1 AND 2	PROCEDURE NO. ABN-705
PRESSURIZER PRESSURE MALFUNCTION	REVISION NO. 12	PAGE 5 OF 26

2.3 Operator Actions

ACTION/EXPECTED RESPONSE	RESPONSE NOT OBTAINED

NOTE:
- Diamond steps denote initial action.
- A PORV is not considered INOPERABLE when its actuation instrumentation is not functioning.
- Power should NOT be removed from a block valve closed in accordance with this procedure section.

☐	◇1	Verify PORV - CLOSED	IF PORV OPEN and RCS Pressure <2335 psig, THEN close affected PORV AND close associated block valve.
☐	◇2	Place u-PK-455A, PRZR MASTER PRESS CTRL in MANUAL	
☐	◇3	Adjust u-PK-455A for current RCS pressure	
☐	4	Transfer to an alternate controlling channel, if required. 1/u-PS-455F, PRZR PRESS CTRL CHAN SELECT	
☐	5	Place u-PK-455A in AUTO	
☐	6	Verify automatic control restoring pressurizer pressure to 2235 psig.	Restore normal pressure by manual control of heaters and sprays, as necessary.
☐	7	Ensure a valid channel selected to recorder. 1/u-PS-455G, u-PR-455 PRZR PRESS SELECT	
☐	8	IF necessary, THEN return PORV closed in Step 1 RNO to AUTO AND ensure it remains closed.	

Comments / Reference: From ABN-705, Section 2.3	Revision # 12

CPNPP ABNORMAL CONDITIONS PROCEDURES MANUAL	UNIT 1 AND 2	PROCEDURE NO. ABN-705
PRESSURIZER PRESSURE MALFUNCTION	REVISION NO. 12	PAGE 6 OF 26

2.3 Operator Actions

ACTION/EXPECTED RESPONSE	RESPONSE NOT OBTAINED
☐ 9 IF necessary, THEN open block valve closed in Step 1 RNO.	
☐ 10 Within 1 hour, verify PCIP 2.6, PRZR PRESS SI BLK PERM P-11 in required state for current pressure.	Perform the following: 1) Place affected bistable in required state. 2) Refer to Technical Specification Table 3.3.2-1, item 8.b.
☐ 11 Verify other instrument on common instrument line - NORMAL (see Attachment 1)	GO TO ABN-706 for affected level channel AND continue this procedure.

NOTE:
- If the failed channel temperature was reading lower than the substituted channel, then AVE Tave will increase when the channel is defeated due to another channel being substituted for the defeated signal to maintain accurate averaging.
- Rod Control is not required to be placed in MANUAL until a Tave loop is defeated using u-TS-412T. As long as a Tave loop is defeated, Rod Control should remain in MANUAL. This does not preclude placing rods in AUTO during rapidly changing transient conditions such as runbacks, etc. as long as rod control is returned to MANUAL when the plant is stabilized. The affected Tave loop does not need to be defeated until just prior to tripping bistables (tripping bistables will cause the N16 and Tave loop to fail low).

[C]

12 Within 72 hours, perform the following:

☐ a. Place 1/u-RBSS, CONTROL ROD BANK SELECT in MANUAL

☐ b. Select the failed channel on the following switches:

u-TS-412T, Tave CHAN DEFEAT

1/u-JS-411E, N16 PWR CHAN DEFEAT

Examination Outline Cross-reference:

Level	RO	SRO
Tier #	2	
Group #	1	
K/A #	008 K4.09	
Importance Rating	2.7	

Component Cooling Water System: Knowledge of CCWS design features and/or interlocks which provide for the following: The standby feature for the CCW pumps

Proposed Question: Common 8

Which ONE (1) of the following identifies the condition under which the standby Component Cooling Water Pump would automatically start?

A. AUTO start of a Station Service Water Pump on low flow in the alternate Station Service Water Train.

B. Component Cooling Water low flow at the opposite Train Component Cooling Water Heat Exchanger outlet.

C. AUTO start of a Station Service Water Pump on high temperature in the alternate Station Service Water Train.

D. Component Cooling Water low pressure at the opposite Train Component Cooling Water Heat Exchanger outlet.

Proposed Answer: D

Explanation:

A. Incorrect. Plausible because the Station Service Water Pump will auto start on low pressure in the alternate Station Service Water Train.
B. Incorrect. Plausible because the Component Cooling Water Pump will auto start on low pressure in the alternate Component Cooling Water Train.
C. Incorrect. Plausible because the Station Service Water Pump will auto start on low pressure in the alternate Station Service Water Train.
D. Correct. This condition will auto start the standby CCW Pump.

Technical Reference(s) SOP-502A, Section 3.0, Precautions
SOP-502A, Step 5.3.1
Attached w/ Revision # See Comments / Reference

Proposed references to be provided during examination: None

Learning Objective: OP51.SYS.CC1.OB02 **STATE** the functions, operation and interlocks of the following Component Cooling Water System components:

- Component Cooling Water Pumps

Question Source: Bank # _____
Modified Bank # _____ (Note changes or attach parent)
New X

Question History: Last NRC Exam _____

Question Cognitive Level: Memory or Fundamental Knowledge X
Comprehension or Analysis _____

10 CFR Part 55 Content: 55.41 4, 7
55.43 _____

Comments / Reference: From SOP-502A, Section 3.0, Precautions	Revision # 18

CPSES SYSTEM OPERATING PROCEDURE MANUAL	UNIT 1 and COMMON	PROCEDURE NO. SOP-502A
COMPONENT COOLING WATER SYSTEM	REVISION NO. 18	PAGE 7 OF 176

3.0 PRECAUTIONS (continued)

- Demineralized water should be used as the source of makeup to the CCW Surge Tank when filling and venting the CCW System.
- All drainage from the CCW System should be directed to the CCW Drain System or to a sump which pumps directly to LVW.
- The CCW pumps will automatically start from the following signals, if the pump control switches are in AUTO:

  Safety Injection sequence signal

  Blackout sequence signal

  Low CCW pressure at the opposite train CCW heat exchanger outlet

  An AUTO start of the associated train SSW pump on low pressure in the alternate SSW train.

Comments / Reference: From SOP-502A, Step 5.3.1	Revision # 18

CPSES SYSTEM OPERATING PROCEDURE MANUAL	UNIT 1 and COMMON	PROCEDURE NO. SOP-502A
COMPONENT COOLING WATER SYSTEM	REVISION NO. 18	PAGE 29 OF 176

5.3 Shutdown

5.3.1 Stopping a CCW Pump

This section provides the steps to stop a CCW Pump.

CAUTION: Two CCW trains shall be OPERABLE in MODES 1, 2, 3 and 4 (TS 3.7.7)

NOTE: The CCW pumps will automatically start from the following signals, if the pump control switches are in AUTO:

- Safety Injection sequence signal
- Blackout sequence signal
- Low CCW pressure at the opposite train CCW heat exchanger outlet
- An AUTO start of the associated train SSW pump on low pressure in the alternate SSW train.

A. Ensure the opposite train pump is operating OR the handswitch is in PULL OUT:

☐ • 1-HS-4518A, CCWP 1

☐ • 1-HS-4519A, CCWP 2

Examination Outline Cross-reference:	Level	RO	SRO
	Tier #	2	
	Group #	1	
	K/A #	008 A4.08	
	Importance Rating	3.1	

Component Cooling Water System: Ability to manually operate and/or monitor in the control room: CCW pump control switch

Proposed Question: Common 9

Given the following conditions:

- Unit 2 is operating at full power when it experiences a Loss of All AC Power.
- A cooldown is in progress per ECA-0.0B, Loss of All AC Power, when power is restored to Safeguards Bus 2EA2 with Emergency Diesel Generator 2-02.
- Approximately 130 seconds has elapsed before the ERG Step is reached which directs start of a Component Cooling Water Pump.
- With Component Cooling Water Pump 2-02 handswitch positioned from PULL-OUT to AUTO (green flag), the pump does not start.

Which ONE (1) of the following identifies why this has occurred?

A. Train A Component Cooling Water Pump 2-01 handswitch is in PULL-OUT.

B. Blackout Sequencer Operator Lockout has not timed out.

C. Blackout Sequencer Auto Lockout defeats all AUTO starts.

D. AUTO start signal is not present because Station Service Water Pump 2-02 is in PULL-OUT.

Proposed Answer: C

Explanation:

A. Incorrect. Plausible because the opposite Trains CCW Pump is in PULL-OUT, however, this would not inhibit AUTO start of the other trains pump.
B. Incorrect. Plausible because the Blackout Sequencer Operator Lockout takes 120 seconds to time out thereby allowing AUTO start of the Reactor Makeup Water Pump, however, it is the Blackout Sequencer Auto Lockout that prevents other AUTO pump starts such as the CCW Pump.
C. Correct. The Blackout Sequencer Auto Lockout must be reset in order to allow AUTOMATIC pump starts.
D. Incorrect. Plausible if thought that the Station Service Water Pump was not already running.

Technical Reference(s) ABN-602, Step 8.3.4, Note
OP51.SYS.EC3.LN, Pages 32 & 33

Attached w/ Revision # See Comments / Reference

Proposed references to be provided during examination: None

Learning Objective: OP51.SYS.CC1.OB02

STATE the functions, operation and interlocks of the following Component Cooling Water System components:

- Component Cooling Water Pumps

Question Source:

Bank # _____

Modified Bank # SL1.XGE.OB100-4 (Note changes or attach parent)

New _____

Question History: Last NRC Exam _____

Question Cognitive Level:

Memory or Fundamental Knowledge _____

Comprehension or Analysis X

10 CFR Part 55 Content:

55.41 4, 7

55.43 _____

Comments / Reference: From ABN-602, Step 8.3.4, Note	Revision # 7

CPNPP ABNORMAL CONDITIONS PROCEDURES MANUAL	UNIT 1 AND 2	PROCEDURE NO. ABN-602
RESPONSE TO A 6900/480V SYSTEM MALFUNCTION	REVISION NO. 7	PAGE 43 OF 99

8.3 Operator Actions

ACTION/EXPECTED RESPONSE	RESPONSE NOT OBTAINED
3 ☐ f. Place the affected TD AFWP steam supply valve handswitch(es) in AUTO after CLOSE if BOS OL cleared or PULL-OUT if BOS OL not clear.	

NOTE:
- If the sequencer has not operated, use attachment 2 as a guide to manually start components as necessary to ensure proper Blackout Sequencer operation
- After approximately 120 seconds BOS Operator Lockout (OL) signal automatically resets, as indicated by associated BOS OPL light OFF and RMUW pump restart when BOS has timed out. Should an OL not automatically reset, resetting the sequencer may correct the condition.
- Prior to resetting the BOS, the UV 3/4 light and the AL lights will be ON. After resetting, the UV 3/4 light will clear immediately and the AL will clear in 5 seconds.
- CR HVAC may be realigned to reduce noise after BOS reset.

4 Check BOS Status:	
☐ a. BOS OL - RESET	a. Continue with Step 5. WHEN OL is RESET, THEN perform Steps 4b, 4c, 4d, 4e, 4f, and 4g.
☐ b. **(Unit 2 only)** Place feedwater split flow valves in manual and 0% demand, if necessary to prevent slamming valves open.	
☐ c. Reset affected train BOS.	
☐ d. Reset Sequencer Auto Test per ALM-0022A/B, window 2.8.	

Comments / Reference: From OP51.SYS.EC3.LN, Pages 32 & 33	Revision # 06/19/00

Safety Injection sequencer Automatic Lockouts indicating light, AL

The red AL light will only illuminate if all of the SIS Automatic Lockouts have energized. If any one of the automatic lockout relays fails to energize, it will not light up. The SI sequencer Automatic Lockouts are actuated whenever a 2 of 4 SI signal exists. Even if there is a 3 of 4 UV signal, the SI Automatic Lockouts will occur.

Therefore, normally to clear the Automatic Lockouts, the operator must wait until Step 11 of the sequencer has been reached (enabling the SIS Reset push-button), reset SI at CB 02 (removing the 2 of 4 SI signal), depress the SI sequencer Reset push-button (resetting the SI Sequencer) and wait 5 seconds. The immediacy of the lockouts is why the Automatic Lockouts are used as a diverse Emergency start signal to the EDG and to the EDG 86-2 and EDG breaker 86-2 bypass circuits. Automatic Lockouts also perform the normal automatic lockout function of preventing other automatic starts of equipment from interfering with the sequencer's timed loading of equipment of the bus. The list of equipment affected by a SIS automatic Lockout is in Attachment 4.

The fact that the Automatic Lockouts stay in until the SI sequencer is reset, is another reason an Automatic Lockout signal was chosen to be an EDG Emergency start signal. Because the Automatic Lockout signals won't clear until the SIS is reset, either the Safety Injection or the SI sequencer must be reset prior to trying a normal or emergency stop of the EDG associated with the sequencer, or the EDG must be stopped by placing the Emergency Start/Stop switch in the pull out position.

Safety Injection Sequencer Operator Lockouts indicating light, OPL.

The red OPL light will only illuminate if all of the SIS Operator Lockouts have energized. If any one of the automatic lockout relays fails to energize, it will not light up. Usually the Operator Lockouts are referred to as OLs but, on the Sequencer panel, the light is labeled OPL.

Therefore, normally at 89 seconds (step 10) plus 20 seconds (=109 seconds) after the SI sequencer has started the operator lockouts clear. The usual way to determine that the Operator Lockouts have reset from the control room horseshoe area is to see the Reactor Makeup Water Pump restart (if it is the Train A SIS that has "fired"). At the SIS, the SIS OPL light would go out when the Operator Lockouts clear. Remember, the SIS Operator Lockouts effect the equipment listed in Attachment 5. In general Operator Lockouts are to prevent the operators from starting equipment while the sequencer is starting equipment. This allows controlled loading of the bus.

Comments / Reference: Exam Bank Question SL1.XGE.OB100-4	Revision # N/A

Given the following conditions:

- Unit 2 is operating at full power when it experiences a Loss of All AC Power.
- A cooldown is in progress per ECA-0.0B, Loss of All AC Power, when power is restored to Safeguards Bus 2EA2 with Emergency Diesel Generator 2-02.
- Approximately 5 minutes elapse as Steam Generator pressure is stabilized before the ERG step is reached which directs start of a Component Cooling Water Pump.
- With Component Cooling Water Pump 2-02 handswitch positioned from PULL-OUT to AUTO (green flag), the pump does not start.

Which ONE (1) of the following identifies why this has occurred?

A. Auto start on one train CCW pump is defeated by having the other train CCW pump handswitch in PULL-OUT.

B. The pump breaker will not close unless the Safeguards Bus is energized.

C. <u>The Blackout Sequencer Auto Lockout defeats all AUTO starts.</u>

D. There is no auto start signal because SSW Pump 2-02 is running.

Examination Outline Cross-reference:	Level	RO	SRO
	Tier #	2	
	Group #	1	
	K/A #	010 K1.01	
	Importance Rating	3.9	

Pressurizer Pressure Control System: Knowledge of the physical connections and/or cause-effect relationships between the PZR PCS and the following systems: RPS

Proposed Question: Common 10

Given the following conditions while at 100% power:

- Both Pressurizer Spray Valves are partially OPEN.
- One set of Pressurizer Backup Heaters is ON.
- All control systems are in AUTOMATIC.
- Centrifugal Charging Pump 1-01 is in service.

Which ONE (1) of the following describes the plant response to Pressurizer Pressure Channel PT-455 failing high while selected as the Control Channel assuming no operator actions are performed?

A. The Reactor will trip on high Pressurizer pressure or Over Power N-16.

B. Both Pressurizer Spray Valves shut when pressure reaches the PRZR Pressure Block setpoint.

C. The Reactor will trip on low Pressurizer pressure or Over Temperature N-16.

D. All Backup Heaters energize when Pressurizer pressure reaches the PRZR Pressure Block setpoint.

Proposed Answer: C

Explanation:

A. Incorrect. Plausible because this action could occur, however, it is associated with a low failure of the controlling channel.
B. Incorrect. Plausible because the Spray Valves do fail open when a channel fails high, however, the Pressurizer Pressure Block setpoint does not close the valves.
C. Correct. Because no operator actions are performed and the PORV opens, pressure will decrease until either the low Pressurizer pressure or Over Temperature N16 trips are actuated.
D. Incorrect. Plausible because all Pressurizer Backup Heaters will energize, however, this occurs when the controlling channel fails low.

Technical Reference(s) ABN-705, Sections 2.2 & 2.3 Attached w/ Revision # See Comments / Reference

Proposed references to be provided during examination: None

Learning Objective: OP51.SYS.PP1.OB07

LIST and **EXPLAIN** the Pressurizer Pressure and Level Control System design features which provide for the trips, permissives and interlocks associated with the following:

- PRZR PORVS Open Interlock in AUTO
- PRZR Low Pressure Reactor Trip
- Normal Overpressure Control

Question Source:

Bank # _____

Modified Bank # SYS.PP1.OB11-2 (Note changes or attach parent)

New _____

Question History: Last NRC Exam _____

Question Cognitive Level:

Memory or Fundamental Knowledge _____

Comprehension or Analysis X

10 CFR Part 55 Content:

55.41 7

55.43 _____

Comments / Reference: From ABN-705, Section 2.2	Revision # 12

CPNPP ABNORMAL CONDITIONS PROCEDURES MANUAL	UNIT 1 AND 2	PROCEDURE NO. ABN-705
PRESSURIZER PRESSURE MALFUNCTION	REVISION NO. 12	PAGE 4 OF 26

2.2 Automatic Actions

NOTE: Control responses will only occur if failure occurs in a channel selected for control.

a. Control response for a pressurizer pressure channel failure HIGH.

1) PORV will open until pressure is reduced to 2185 psig, then the other channel will close the PORV.

- 1/u-PCV-455A, PRZR PORV
- 1/u-PCV-456, PRZR PORV

2) Variable heaters are turned off.

- 1/u-PCPR, PRZR CTRL HTR GROUP C

3) Both spray valves open.

- u-ZL-455B, RC LOOP 1 PRZR SPR VLV
- u-ZL-455C, RC LOOP 4 PRZR SPR VLV
- u-PK-455B, RC LOOP 1 PRZR SPR VLV CTRL
- u-PK-455C, RC LOOP 4 PRZR SPR VLV CTRL

b. Control response for a pressurizer pressure channel failure LOW.

NOTE: Transferring to alternate channel while still in AUTO may cause the PORV to open.

1) Control and backup heaters come on and PORVs will open at 2335 psig.

- 1/u-PCPR, PRZR CTRL HTR GROUP C
- 1/u-PCPR1, PRZR BACKUP HTR GROUP A
- 1/u-PCPR2, PRZR BACKUP HTR GROUP B
- 1/u-PCPR3, PRZR BACKUP HTR GROUP C
- 1/u-PCV-455A, PRZR PORV
- 1/u-PCV-456, PRZR PORV

Comments / Reference: From ABN-705, Section 2.3	Revision # 12

CPNPP ABNORMAL CONDITIONS PROCEDURES MANUAL	UNIT 1 AND 2	PROCEDURE NO. ABN-705
PRESSURIZER PRESSURE MALFUNCTION	REVISION NO. 12	PAGE 5 OF 26

2.3 Operator Actions

ACTION/EXPECTED RESPONSE	RESPONSE NOT OBTAINED

NOTE:
- Diamond steps denote initial action.
- A PORV is not considered INOPERABLE when its actuation instrumentation is not functioning.
- Power should NOT be removed from a block valve closed in accordance with this procedure section.

☐	◇1	Verify PORV - CLOSED	IF PORV OPEN and RCS Pressure <2335 psig, THEN close affected PORV AND close associated block valve.
☐	◇2	Place u-PK-455A, PRZR MASTER PRESS CTRL in MANUAL	
☐	◇3	Adjust u-PK-455A for current RCS pressure	
☐	4	Transfer to an alternate controlling channel, if required. 1/u-PS-455F, PRZR PRESS CTRL CHAN SELECT	
☐	5	Place u-PK-455A in AUTO	
☐	6	Verify automatic control restoring pressurizer pressure to 2235 psig.	Restore normal pressure by manual control of heaters and sprays, as necessary.

Comments / Reference: Exam Bank Question SYS.PP1.OB11-2	Revision # 07/29/96

Which ONE of the choices below correctly describes the plant response to PRZR Pressure channel PT-455 failing high while selected as the control channel with the following initial plant conditions:

- 100% RTP
- Both PRZR Spray valves CLOSED
- BU Heaters OFF
- All control systems in automatic
- CCP u-01 in service

A. The reactor will trip on high PRZR pressure.
B. The PORV block valve will shut when pressure reaches the interlock channel setpoint.
C. <u>The reactor will trip on low pressure or OTN-16.</u>
D. None of the above are correct in this situation.

Examination Outline Cross-reference:	Level	RO	SRO
	Tier #	2	
	Group #	1	
	K/A #	012 K4.08	
	Importance Rating	2.8	

Reactor Protection System: Knowledge of RPS design features and/or interlocks which provide for the following: Logic matrix testing

Proposed Question: Common 11

Given the following conditions:

- Unit 1 is at 40% power.
- Solid State Protection System (SSPS) Train B Actuation Logic testing is being performed.
- Train B SSPS Mode Selector Switch is in the TEST position.
- Train B SSPS Input Error Inhibit Switch is in the INHIBIT position.

Which ONE (1) of the following describes the status of the Reactor if a loss of Distribution Panel 1PC1 were to occur on Train A SSPS?

A. Reactor at 40% power with a GENERAL WARNING for Train A SSPS only.

B. Reactor Trip with a GENERAL WARNING for both Train A and Train B SSPS with the First Out annunciator NOT illuminated.

C. Reactor at 40% power with a GENERAL WARNING for Train B SSPS only.

D. Reactor Trip with a GENERAL WARNING for both Train A and Train B SSPS and the First Out annunciator illuminated.

Proposed Answer: B

Explanation:

A. Incorrect. Plausible because a GENERAL WARNING is generated for a loss of either 48 VDC power supply, however, performing testing on the other Train generates a GENERAL WARNING for both Trains and the Unit trips.

B. Correct. Testing on one train of SSPS generates a GENERAL WARNING. A loss of any of the four DC power supplies in the other Train of SSPS also generates a GENERAL WARNING and opens the Reactor Trip Breakers. Since power level is below 50%, a Turbine trip then causes a Reactor trip signal to be generated. The First Out annunciator would NOT alarm because power is below 50%.

C. Incorrect. Plausible because a GENERAL WARNING is generated for a loss of either 48 VDC power supply, however, performing testing on the other Train generates a GENERAL WARNING for both Trains and the Unit trips.

D. Incorrect. Plausible because a Reactor Trip is generated, but a First Out annunciator will not occur due to the Unit being below P-9, RX > 50% PWR TURB TRIP.

Technical Reference(s) ALM-0064A, 1-ALB-6D-1.5 Attached w/ Revision # See Comments / Reference

Proposed references to be provided during examination: None

Learning Objective: OP51.SYS.ES2.OB17 **LIST** the conditions that produce a Reactor Protection System General Warning Alarm and **EXPLAIN** what occurs on a General Warning on one or both trains.

Question Source: Bank # _____
Modified Bank # SYS.ES2.OB08-5 (Note changes or attach parent)
New _____

Question History: Last NRC Exam _____

Question Cognitive Level: Memory or Fundamental Knowledge _____
Comprehension or Analysis X

10 CFR Part 55 Content: 55.41 7
55.43 _____

Comments / Reference: From ALM-0064A, 1-ALB-6D-1.5	Revision # 6

CPSES ALARM PROCEDURES MANUAL	UNIT 1	PROCEDURE NO. ALM-0064A
ALARM PROCEDURE 1-ALB-6D	REVISION NO. 6	PAGE 19 OF 147

ANNUNCIATOR NOM./NO.: **SSPS TRN A GEN WARNING** 1.5

PROBABLE CAUSE:

Surveillance testing
Loss of power
Internal power supply failure

NOTE: Controlled evolutions for authorized testing should not require an alarm response.

AUTOMATIC ACTIONS: None

NOTE:
- The SSPS trouble alarm generates a GENERAL WARNING condition on the associated train. If a GENERAL WARNING condition exists on both trains, a Reactor trip is actuated.
- If a GENERAL WARNING condition exists on both trains and power <P-9, no first out annunciator will be in alarm.
- If a GENERAL WARNING condition exists on both trains and power ≥P-9, a RX >50% PWR TURB TRIP first out alarm will be illuminated.

OPERATOR ACTIONS:

1. Notify I&C to suspend any testing in Train B SSPS.

2. Dispatch an operator to TBX-ESELSP-01, SOLID STATE PROTECTION SYSTEM TRAIN A to determine cause of alarm.

NOTE: Power supplies to SSPS:

- 1PC1/7/BKR, SSPS INPUT/LOGIC CABINET 1-SP-01A TRAIN A CHAN I SUPPLY BREAKER (field contacts and 15, 48 V DC power supply)
- 1PC1/15/BKR, SSPS OUTPUT CABINET 1-SP-01A2 TRAIN A CHAN I SUPPLY BREAKER (slave relay power only)
- 1PC2/7/BKR, SSPS INPUT/LOGIC CABINET 1-SP-01A TRAIN A CHAN II SUPPLY BREAKER (field contacts only)
- 1PC3/7/BKR, SSPS INPUT/LOGIC CABINET 1-SP-01A TRAIN A CHAN III SUPPLY BREAKER (field contacts and 15, 48 V DC power supply)
- 1PC4/7/BKR, SSPS INPUT/LOGIC CABINET 1-SP-01A TRAIN A CHAN IV SUPPLY BREAKER (field contacts only)

Comments / Reference: Exam Bank Question SYS.ES2.OB08-5	Revision # N/A

Given the following conditions:

- Unit 1 is at 52% power.
- Solid State Protection System (SSPS) Train 'B' Actuation Logic testing is being performed.
- Train ‘B’ SSPS Mode Selector switch is in the ‘TEST’ position.
- Train ‘B’ SSPS Input Error Inhibit switch is in the ‘INHIBIT’ position.

Which of the following describes the status of the reactor if a loss of one of the two 48 VDC instrument power supply were to occur on Train 'A' SSPS?

A. Reactor at 52% power with a General Warning for Train 'A' SSPS ONLY.
B. Reactor Trip with a General Warning for BOTH Train 'A' and Train 'B' SSPS and NO First Out Alarm illuminated.
C. Reactor at 52% power with a General Warning for Train 'B' SSPS ONLY.
D. <u>Reactor Trip with a General Warning for BOTH Train 'A' and Train 'B' SSPS and a First Out Alarm illuminated.</u>

Examination Outline Cross-reference:

Level	RO	SRO
Tier #	2	
Group #	1	
K/A #	013 K3.03	
Importance Rating	4.3	

Engineered Safety Features Actuation System: Knowledge of the effect that a loss or malfunction of the ESFAS will have on the following: Containment

Proposed Question: Common 12

Maintenance of the CONTAINMENT Critical Safety Function during a design basis Loss Of Coolant Accident requires which ONE (1) of the following Containment Systems to be OPERABLE to ensure Containment Integrity?

A. Automatic or manual isolation of both trains of Containment Phase A Isolation.

B. Automatic or manual actuation of Containment Pressure Relief.

C. Automatic or manual actuation of Containment Spray.

D. Automatic or manual isolation of both trains of Containment Ventilation Isolation.

Proposed Answer: C

Explanation:

A. Incorrect. Plausible because Containment Phase A Isolation ensures releases are kept to a minimum, however, operation of Containment Spray assures proper Containment Integrity.
B. Incorrect. Plausible because Containment Pressure Relief assists in maintaining Containment Integrity, however, it is Containment Spray that ultimately maintains the Safety Function.
C. Correct. Automatic or manual actuation of Containment Spray is the Engineered Safety Features Actuation System that maintains the Containment Safety Function and Containment Integrity.
D. Incorrect. Plausible because the release of radioactivity is directly tied to the Containment Ventilation System, however, it is the operation of Containment Spray that assures proper Containment Integrity.

Technical Reference(s) FRZ-0.1A, Attachment 6, Bases — Attached w/ Revision # See Comments / Reference

Proposed references to be provided during examination: None

Learning Objective:
O21.MCO.MIF.OB02 **DESCRIBE** the limiting analysis for the Containment Critical Safety Function.

Question Source:

Bank #	MCO.MIF.OB103-2	
Modified Bank #		(Note changes or attach parent)
New		

Question History: Last NRC Exam

Question Cognitive Level: Memory or Fundamental Knowledge _____
Comprehension or Analysis X

10 CFR Part 55 Content: 55.41 7, 10
55.43 _____

Comments / Reference: From FRZ-0.1A, Attachment 6, Bases	Revision # 8

CPSES EMERGENCY RESPONSE GUIDELINES	UNIT 1	PROCEDURE NO. FRZ-0.1A
RESPONSE TO HIGH CONTAINMENT PRESSURE	REVISION NO. 8	PAGE 18 OF 25

ATTACHMENT 6
PAGE 1 OF 8

BASES

STEP 1: Containment pressure being above 18.0 psig does not constitute a severe challenge to the containment critical safety function provided that containment spray is running and containment pressure is NOT greater than its design value of 50 psig. Verification of proper containment spray operation (e.g., pumps running, valve alignment, RCPs stopped, etc.) may have been performed in EOP-0.0A, REACTOR TRIP OR SAFETY INJECTION and therefore, the actions of this procedure to verify containment spray are not required. If containment spray alignment has not been verified in EOP-0.0A, then this procedure should be performed to ensure proper containment spray operation.

Comments / Reference: From FRZ-0.1A, Attachment 6, Bases	Revision # 8

CPSES EMERGENCY RESPONSE GUIDELINES	UNIT 1	PROCEDURE NO. FRZ-0.1A
RESPONSE TO HIGH CONTAINMENT PRESSURE	REVISION NO. 8	PAGE 22 OF 25

ATTACHMENT 6
PAGE 5 OF 8

BASES

STEP 7: Now that the procedure steps have been completed, the operator should continue plant recovery operations by returning to the procedure and step that was in effect at the time FRZ-0.1A was entered.

It should be noted that once all the actions of this procedure are completed and the operator is returned to the procedure and step in effect, this particular Containment function may not be restored to a GREEN priority. If this is the case, the appropriate Function Restoration Guideline does not need to be implemented again since all necessary actions have already been performed.

ATTACHMENT 1.A

This attachment provides the status tree for the CONTAINMENT critical safety function. Use of the status tree identifies the status of the applicable critical safety function at any given time. The Critical Safety Function Status Trees are normally monitored using the SPDS display on the Plant Computer.

CONTAINMENT PRESSURE LESS THAN 50 PSIG - If containment pressure is greater than design pressure, an extreme challenge to the containment barrier exists. Above containment design pressure, leakage may exceed design basis limits. It is expected that containment pressure suppression equipment should be able to maintain pressure below design pressure. If not, then operator action is necessary to check containment functions and a RED priority is warranted. The appropriate procedure for function restoration is FRZ-0.1A.

Examination Outline Cross-reference:

Level	RO	SRO
Tier #	2	
Group #	1	
K/A #	A1.01	
Importance Rating	3.6	

Containment Cooling System: Ability to predict and/or monitor changes in parameters (to prevent exceeding design limits) associated with operating the CCS controls including: Containment temperature

Proposed Question: Common 13

Given the following conditions:

- Reactor Coolant System temperature is 500°F.
- Six (6) Ventilation Chillers are in service.
- Three (3) Containment Fan Coolers are in service.
- Containment air temperature is 122°F.
- Containment pressure is 1.2 psig.

Which ONE (1) of the following actions are required to restore Containment conditions to within limits?

Reduce Containment...

A. pressure by placing the Containment Pressure Relief System in service.

B. pressure by placing the Containment Purge Supply and Exhaust System in service.

C. temperature by placing an additional Ventilation Chiller in service.

D. temperature by placing an additional Containment Fan Cooler in service.

Proposed Answer: D

Explanation:

A. Incorrect. Plausible because Containment pressure is close to exceeding the upper limit of 1.3 psig, however, Containment temperature is above the limit of 120°F. With the Unit in Mode 4 (> 200°F) only the Containment Pressure Relief System is to be used to adjust Containment pressure.

B. Incorrect. Plausible since Containment pressure is close to exceeding the upper limit of 1.3 psig, however, the Containment Purge Supply and Exhaust System is only permitted to be used in MODES 5 and 6.

C. Incorrect. Plausible because Containment temperature is out of specification high, however, there are no additional Ventilation Chillers available for service.

D. Correct. Containment temperature is exceeding the Technical Specification limit of 120°F. Operate additional Containment Fan Coolers per SOP-801A.

Technical Reference(s) SOP-801A, Step 4.1
ALM-0031, 1-ALB-3A-1-1
Attached w/ Revision # See Comments / Reference

Proposed references to be provided during examination: None

Learning Objective: OP51.SYS.CL1.OB14 **ANALYZE** the indications and **DESCRIBE** the mitigation strategy and major steps taken relative to the Containment Ventilation system, both initial and subsequent, for:

- ALM-0031, Alarm Procedure u-ALB-3A

Question Source: Bank # _____
Modified Bank # SYS.CL1.OB14-1 (Note changes or attach parent)
New _____

Question History: Last NRC Exam _____

Question Cognitive Level: Memory or Fundamental Knowledge _____
Comprehension or Analysis X

10 CFR Part 55 Content: 55.41 9, 10
55.43 _____

Comments / Reference: From SOP-801A, Step 4.1 | Revision # 13

CPSES SYSTEM OPERATING PROCEDURES MANUAL	UNIT 1	PROCEDURE NO. SOP-801A
CONTAINMENT VENTILATION SYSTEM	REVISION NO. 13	PAGE 7 OF 49

4.0 LIMITATIONS AND NOTES

4.1 Limitations

- Primary containment internal indicated pressure shall be maintained between -0.3 and 1.3 psig as per TS 3.6.4.
- Primary containment average air temperature shall NOT exceed 120°F per TS 3.6.5.

Comments / Reference: From SOP-801A, Step 5.1.1	Revision # 13

CPSES SYSTEM OPERATING PROCEDURES MANUAL	UNIT 1	PROCEDURE NO. SOP-801A
CONTAINMENT VENTILATION SYSTEM	REVISION NO. 13	PAGE 9 OF 49

5.0 INSTRUCTIONS

5.1 Containment Air Cooling and Recirculation System

[C] 5.1.1 Containment Air Cooling and Recirculation System Startup

This section describes the steps to place the Containment Air Cooling and Recirculation System in service.

CAUTION: Startup of this system may change indicated radiation levels inside containment due to mixing of noble gases from stagnant areas of air. Radiation levels reaching High Alarm on Containment Air Gaseous (1-RE-5503) or Particulate Monitors (1-RE-5502) will cause a Containment Ventilation Isolation (CVI).

☐ A. Ensure the prerequisites in Section 2.1 are met.

☐ B. Verify the Hydrogen Purge Supply and Exhaust System is NOT in service.

C. IF a Containment Purge or Vent is in progress, THEN perform one of the following:

☐ • Secure the Containment Purge (5.6.2 or 5.6.4) or Vent (5.6.5).

OR

☐ • Closely monitor the Containment Air Gaseous (1-RE-5503) and Particulate Monitors (1-RE-5502) to verify they remain below their Alert Alarm Limit. IF radiation levels on one of these monitors increases to the Alert Alarm Limit, THEN step 5.1.1 I will direct the response.

OR

☐ • IF in MODE 5, 6 OR core off-loaded, AND there are no core alterations or movement of irradiated fuel assemblies within containment, THEN disable the automatic CVI signals from the Containment Air Gaseous (1-RE-5503) and Particulate Monitors (1-RE-5502) using SOP-706.

D. Start one cooling unit. Verify the associated discharge damper on the running fan opens AND the dampers for the non-running fans remain closed.

☐ • 1-HS-5405A, CNTMT FN CLR FN 1 (1-HV-5405D)

☐ • 1-HS-5409A, CNTMT FN CLR FN 2 (1-HV-5409D)

☐ • 1-HS-5413A, CNTMT FN CLR FN 3 (1-HV-5413D)

☐ • 1-HS-5417A, CNTMT FN CLR FN 4 (1-HV-5417D)

☐ E. Ensure 1-HS-6084, CH WTR SPLY ISOL VLV ORC is open.

Comments / Reference: From SOP-801A, Step 5.1.1.F	Revision # 13

CPSES SYSTEM OPERATING PROCEDURES MANUAL	UNIT 1	PROCEDURE NO. SOP-801A
CONTAINMENT VENTILATION SYSTEM	REVISION NO. 13	PAGE 10 OF 49

5.1.1 F. IF required, start additional cooling units to maintain containment temperature. Verify the associated discharge dampers on the running fans open AND the damper(s) for the non-running fans remain closed.

- ☐ 1-HS-5405A, CNTMT FN CLR FN 1 (1-HV-5405D)
- ☐ 1-HS-5409A, CNTMT FN CLR FN 2 (1-HV-5409D)
- ☐ 1-HS-5413A, CNTMT FN CLR FN 3 (1-HV-5413D)
- ☐ 1-HS-5417A, CNTMT FN CLR FN 4 (1-HV-5417D)

G. Verify the chill water return valves from the selected cooling units automatically open as indicated by the position lights on the valve handswitches on CV-01.

- ☐ 1-HS-6074, CNTMT FN CLR 1 CH WTR RET VLV
- ☐ 1-HS-6075, CNTMT FN CLR 2 CH WTR RET VLV
- ☐ 1-HS-6076, CNTMT FN CLR 3 CH WTR RET VLV
- ☐ 1-HS-6077, CNTMT FN CLR 4 CH WTR RET VLV

Comments / Reference: From ALM-0031, 1-ALB-3A-1-1	Revision # 7

CPSES ALARM PROCEDURES MANUAL	UNIT 1	PROCEDURE NO. ALM-0031A
ALARM PROCEDURE 1-ALB-3A	REVISION NO. 7	PAGE 9 OF 97

ANNUNCIATOR NOM./NO.: **CNTMT TEMP HI** **1.1**

OPERATOR ACTIONS: (Continued)

NOTE: Due to instrument inaccuracies containment average temperature should be assumed to be 4°F higher than indicated on the plant computer. This value may then be used to determine if temperature is within Technical Specification limits.

3. A. If 1-TI-5400A is >110°F, monitor Containment average temperature on the Plant Computer.

NOTE: If a more accurate method of temperature measurement is required to meet LCO, I & C personnel may measure resistance at individual RTD terminations and calculate average temperature. This method of measurement is accurate to within 1°F.

B. If Containment average temperature is >116°F on the Plant Computer, notify I&C personnel to determine Containment average temperature by measuring individual loop resistance, as desired.

4. Refer to TS 3.6.5 and TRM 13.7.36.

5. Ensure Chilled Water supply and return valves for Containment are open:
- 1-HS-6082, CH WTR RET ISOL VLV
- 1-HS-6083, CH WTR RET ISOL VLV
- 1-HS-6084, CH WTR SPLY ISOL VLV

6. Ensure Chilled Water return valves from inservice Containment Recirc Fans are open (X-CV-01).
- 1-HS-6074, CNTMT FN CLR 1 CH WTR RET VLV
- 1-HS-6075, CNTMT FN CLR 2 CH WTR RET VLV
- 1-HS-6076, CNTMT FN CLR 3 CH WTR RET VLV
- 1-HS-6077, CNTMT FN CLR 4 CH WTR RET VLV

7. Ensure Ventilation Chilled Water Chillers and Pumps operating per SOP-814 for Ventilation Water Chiller X-01, X-02, X-03 and X-04 Startup.

A.

Comments / Reference: From SYS.CL1.OB14-1	Revision # N/A

Given the following conditions:

- The Reactor Coolant System is at 260°F during a Unit 1 heatup following a maintenance outage.
- Three (3) Containment Recirculation Air Coolers are in service and three (3) Ventilation Chillers are in service.
- Containment air temperature is 108°F and Containment pressure is 1.4 psig.

Which of the following actions are required to restore Containment conditions within limits?

A. <u>Reduce Containment pressure by placing the Containment Pressure Relief System in service.</u>

B. Reduce Containment pressure by placing the Containment Purge Supply and Exhaust System in service.

C. Reduce Containment temperature by placing an additional Containment Recirculation Air Cooler in service.

D. Reduce Containment temperature by placing an additional Ventilation Chiller in service.

Examination Outline Cross-reference:	Level	RO	SRO
	Tier #	2	
	Group #	1	
	K/A #	026 A2.04	
	Importance Rating	3.9	

Containment Spray System: Ability to (a) predict the impacts of the following malfunctions or operations on the CSS; and (b) based on those predictions, use procedures to correct, control, or mitigate the consequences of those malfunctions or operations: Failure of spray pump

Proposed Question: Common 14

Given the following conditions during a Large Break Loss of Coolant Accident:

- Containment Spray Pump 1-01 is discovered off while in EOP-0.0A, Reactor Trip or Safety Injection.
- Annunciator 1-ALB-2B-1.3, ANY CSP OVERLOAD/TRIP is in alarm.
- The green, white, and amber lights above Containment Spray Pump 1-01 handswitch are illuminated.
- Containment pressure is 20 psig and increasing.

Which ONE (1) of the following:

1.) Identifies the most likely cause of the Containment Spray Pump trip?

2.) What action should be taken to mitigate the situation?

A. 1.) Phase overcurrent (86M lockout relay actuated).
   2.) Attempt to restart the Containment Spray Pump by placing the handswitch in STOP and then START.

B. 1.) Motor overload (74 overload relay actuated).
   2.) Attempt to restart the Containment Spray Pump by placing the handswitch in STOP and then START.

C. 1.) Phase overcurrent (86M lockout relay actuated).
   2.) PLACE the Containment Spray Pump handswitch in STOP to avoid an automatic restart of the pump.

D. 1.) Motor overload (74 overload relay actuated).
   2.) PLACE the Containment Spray Pump handswitch in STOP to avoid an automatic restart of the pump.

Proposed Answer: A

Explanation:

A. Correct. Given the conditions listed, a motor overcurrent has occurred. Because Containment pressure is greater than 18 pounds it is desirable to attempt a restart of the CSP per the guidelines in OPGD-3.

B. Incorrect. Plausible because a motor overload is possible, however, the light indications are consistent with a motor overcurrent.

C. Incorrect. Plausible because a motor overcurrent has occurred; however, given the conditions listed in the Stem and guidance in OPGD-3, a pump restart is desirable.

D. Incorrect. Plausible because a motor overload is possible, however, the light indications are consistent with a motor overcurrent. Additionally, placing the handswitch in STOP could cause an automatic restart to occur. See CAUTION before Step 1.

Technical Reference(s) ALM-0022A, 1-ALB-2B-1.3
OPGD-3, Step 5.8.2
Attached w/ Revision # See Comments / Reference

Proposed references to be provided during examination: None

Learning Objective: OP51.SYS.CT1.OB17
ANALYZE the indications and **DESCRIBE** the mitigation strategy and major steps taken relative to the Containment Spray system, both initial and subsequent, for:

- ALM-0022, Alarm Procedure u-ALB-2B

Question Source:
Bank # _____
Modified Bank # _____ (Note changes or attach parent)
New X

Question History: Last NRC Exam _____

Question Cognitive Level:
Memory or Fundamental Knowledge _____
Comprehension or Analysis X

10 CFR Part 55 Content:
55.41 10
55.43 _____

Comments / Reference: From ALM-0022A, 1-ALB-2B-1.3	Revision # 9

CPSES ALARM PROCEDURES MANUAL	UNIT 1	PROCEDURE NO. ALM-0022A
ALARM PROCEDURE 1-ALB-2B	REVISION NO. 9	PAGE 11 OF 113

ANNUNCIATOR NOM./NO.: **ANY CSP OVRLOAD/TRIP** **1.3**

PROBABLE CAUSE:

Phase overcurrent
Phase ground
Motor overload

NOTE: If Containment Spray Pump has not tripped, probable cause of alarm is a motor overload condition. With more than one pump in service, a PEO will have to determine affected pump at breaker compartment.

AUTOMATIC ACTIONS: None

OPERATOR ACTIONS:

CAUTION: Do not place pump handswitch in STOP if pump has tripped (white TRIP light). This will reset 86M relay (white TRIP light) and may result in an automatic restart.

1. Determine affected pump.

2. Dispatch a PEO to affected pump to check for signs of damage (smoke, acrid odor, overheating).

3. Dispatch a PEO to Containment Spray Pump breakers to determine cause of alarm.
   - 1APCS1, CONTAINMENT SPRAY PUMP 1-01 MOTOR BREAKER (1EA1/8/BKR)
   - 1APCS2, CONTAINMENT SPRAY PUMP 1-02 MOTOR BREAKER (1EA2/10/BKR)
   - 1APCS3, CONTAINMENT SPRAY PUMP 1-03 MOTOR BREAKER (1EA1/6/BKR)
   - 1APCS4, CONTAINMENT SPRAY PUMP 1-04 MOTOR BREAKER (1EA2/11/BKR)

   A. Identify affected relays (red buttons).
   B. Determine if an overload condition exists (sustained current > 50 amps).
   C. Notify Control Room of affected relays and overload condition.

4. If an overload condition is indicated and 1-HS-4776/4777, CS HX 1/2 OUT VLV are closed, stop affected pump(s).

Comments / Reference: From OPGD-3, Step 5.8.2	Revision # 09/25/08

5.8 Guidance for replacing blown fuses or re-closing tripped breakers

5.8.1 In cases where fuses have blown, the following actions should be performed:

- Notify the Unit Supervisor of the condition.
- If the fuse is a low voltage control power fuse, normally less than 120 VAC or 125 VDC, the fuse may be replaced as directed by the Unit Supervisor. When more than one fuse is in series with blown fuses, all fuses should be replaced since they may have been weakened by excessive current.
- Replacement fuses should be verified to be of the correct type and size per vital station drawings or engineering specifications.
- Replacing a blown fuse should only be attempted once. If a fuse blows after being replaced, initiate a work request.
- If the fuse type and size information is not available, contact Electrical Maintenance OR initiate a SMF Evaluation to determine the correct fuse type and size. If the component is needed for plant operation and it is apparent a rapid determination can not be made, replace the fuse with one equivalent to the fuse removed and ensure this replacement fuse information is included into the SMF evaluation.

5.8.2 Guidance for responding to tripped breakers:

- Notify the Unit Supervisor of the condition
- Breakers < 125 volts may be reset one time after the equipment is checked for any obvious signs of damage and found to be normal.
- Breakers > 125 volts should not normally be re-closed prior to an investigation by Electrical Maintenance and/or M & R personnel as appropriate.
- Breakers > 125 volts may be re-closed one time without a thorough maintenance inspection under the following conditions:
  - The component and its breaker have been checked for any obvious signs of damage by Operations personnel and found to be normal.

    AND
  - The component is required under emergency conditions; such as, mitigating potential core damage.

    AND
  - The Shift Manager has approved the single re-closure and the actions taken are entered in the Unit Log.

    OR
  - As specifically allowed by emergency procedures.

Examination Outline Cross-reference:	Level	RO	SRO
	Tier #	2	
	Group #	1	
	K/A #	039 A3.02	
	Importance Rating	3.2	

Main and Reheat Steam System: Ability to monitor automatic operation of the MRSS, including: Isolation of the MRSS

Proposed Question: Common 15

Given the following conditions following a Steam Line Break outside Containment:

- EOP-2.0A, Faulted Steam Generator Isolation is in progress.
- 125 VDC Battery BT1D2 is verified aligned from either 125 VDC Battery Chargers BC1D2 or BC1D24.

Which ONE (1) of the following identifies the reason for ensuring an OPERABLE Battery Charger is aligned to Distribution Panel 1D2?

A. Loss of Main Turbine Emergency DC Oil Pump.

B. Two (2) Steam Generator Atmospheric Release Valves may inadvertently open.

C. The Main Steam Isolation Valves may inadvertently open.

D. Loss of Unit Auxiliary Transformer 1UT.

Proposed Answer: C

Explanation:

A. Incorrect. Plausible because the Main Turbine Emergency DC Oil Pump is powered from Bus 1D2, however, not Distribution Panel 1D2.
B. Incorrect. Plausible because the emergency overrides for Atmospheric Release Valves #2 and #4 are powered from Bus 1ED2.
C. Correct. Because the power supply to Battery Charger BC1D2 is load shed on a Safety Injection Signal (SIS), EOP-2.0A requires an alignment to Battery Charger BC1D24. If Battery Charger BC1D24 is not available, the SIS is reset, and Battery Charger BC1D2 is placed in service. Either of these actions is performed to ensure that the Main Steam Isolation Valves remain closed.
D. Incorrect. Plausible because power for Unit Auxiliary Transformer 1UT comes from Bus 1D2-2

Technical Reference(s)		
	EOP-2.0A, Attachment 2	Attached w/ Revision # See Comments / Reference
	OP51.SYS.DC1.LM, Page 15	
	Electrical Print E1-0019, Sheet C	

Proposed references to be provided during examination: None

Learning Objective: OP51.SYS.MR1.OB07 **DRAW** a one-line diagram of the hydraulic, nitrogen, and air supply system for the MSIVs similar to Figure 6; **EXPLAIN** remote and local operations, and the consequences of a loss of power to the hydraulic solenoids.

OP51.SYS.MR1.OB25 **DESCRIBE** the environmental qualification concerns associated with the MSIV hydraulic system solenoid valves and local pressure indications.

Question Source: Bank # SK1.XG3.OB104-7
Modified Bank # _____ (Note changes or attach parent)
New _____

Question History: Last NRC Exam _____

Question Cognitive Level: Memory or Fundamental Knowledge _____
Comprehension or Analysis X

10 CFR Part 55 Content: 55.41 7
55.43 _____

Comments / Reference: From EOP-2.0A, Attachment 2	Revision # 8

CPSES EMERGENCY RESPONSE GUIDELINES	UNIT 1	PROCEDURE NO. EOP-2.0A
FAULTED STEAM GENERATOR ISOLATION	REVISION NO. 8	PAGE 7 OF 14

ATTACHMENT 2
PAGE 1 OF 2

MSIV ELECTRICAL REQUIREMENT VERIFICATION

To prevent inadvertent opening of the MSIVs, the following steps should be performed to maintain power aligned to Battery BT1D2.

☐ 1. Locally verify 1D2/2-6/BKR, 125 VDC BATTERY CHARGER BC1D24 TO 125/250 VDC SWBD 1D2 POS FEEDER BKR is CLOSED to confirm the Positive-Neutral side of Switchboard 1D2 is powered from Battery Charger BC1D24 (ECB 792, X-129, Unit 1 Train C UPS Room).

2. IF necessary to align Battery Charger BC1D24 to supply Switchboard 1D2 (Battery BT1D2), THEN perform the following:

a. Ensure the following breakers on BC1D24 in OFF (ECB 792, X-129, Unit 1 Train C UPS Room).

☐ • BC1D24/CB1/BKR, 480 VAC MCC 1B1-1 TO BATTERY CHARGER BC1D24 INPUT BREAKER

☐ • BC1D24/CB2/BKR, BATTERY CHARGER BC1D24 TO 125/250 VDC SWITCHBOARD 1D2 OUTPUT BREAKER

b. Ensure BC1D24 AC feeder breaker in ON (TB 803, North of Main Feedwater Pump 1-B).

☐ • 1B1-1/6BR/BKR, 125 VDC BATTERY CHARGER BC1D24 SUPPLY BREAKER

☐ c. Place 1D2/2-6/BKR, 125 VDC BATTERY CHARGER BC1D24 TO 125/250 VDC SWBD 1D2 POS FEEDER BKR in ON (This will align BC1D24 to BT1D2).

d. Place BC1D24 AC INPUT breaker in ON.

☐ • BC1D24/CB1/BKR, 480 VAC MCC 1B1-1 TO BATTERY CHARGER BC1D24 INPUT BREAKER

e. Ensure the following indications on BC1D24:

☐ • FLOAT light (green) is LIT.

☐ • DC VOLTS indicates FLOAT voltage, 128-135 VDC.

☐ • EQUALIZE TIMER set to Zero (0).

f. Place BC1D24 DC OUTPUT breaker in ON.

☐ • BC1D24/CB2/BKR, BATTERY CHARGER BC1D24 TO 125/250 VDC SWITCHBOARD 1D2 OUTPUT BREAKER

Comments / Reference: From EOP-2.0A, Attachment 2	Revision # 8

ATTACHMENT 2
PAGE 2 OF 2

MSIV ELECTRICAL REQUIREMENT VERIFICATION

g. Ensure the following indications on BC1D24:

- ☐ Alarm lights (red) off.
- ☐ DC AMPERES deflects and stabilizes less than or equal to 250 AMPS.
- ☐ DC VOLTS indicates FLOAT voltage, 128-135 VDC.

h. Ensure the following breakers on BC1D2 in OFF. (ECB 792, Train C Battery Room.)

- ☐ BC1D2/CB1/BKR, 480 VAC MCC 1EB2-1 TO BATTERY CHARGER BC1D2 INPUT BREAKER
- ☐ BC1D2/CB2/BKR, BATTERY CHARGER BC1D2 TO 125/250 VDC SWITCHBOARD 1D2 OUTPUT BREAKER

NOTE: The power supply to Battery Charger BC1D2 is load shed on a Safety Injection signal.

3. IF Battery Charger BC1D24 is NOT available, THEN perform the following to realign Battery Charger BC1D2 to Battery BT1D2:

☐ a. IF the diesels are running, THEN place both DG EMER STOP/START handswitches in START.

☐ b. Reset SI.

☐ c. Reset 1EB2-1/1FR/BKR, 125 VDC BATTERY CHARGER BC1D2 SUPPLY BREAKER (Sfgds 852 HP Chem Feed Room).

d. Verify the following indications on BC1D2 (ECB 792, Train C Battery Room).

- ☐ Alarm lights (red) off.
- ☐ DC AMPERES stabilizes less than or equal to 250 AMPS.
- ☐ DC VOLTS indicates FLOAT voltage, 128-135 VDC.

☐ 4. Notify Unit Supervisor attachment instructions complete AND Switchboard 1D2 Battery Charger status.

Comments / Reference: From Electrical Print E1-0019, Sheet C	Revision # CP-27

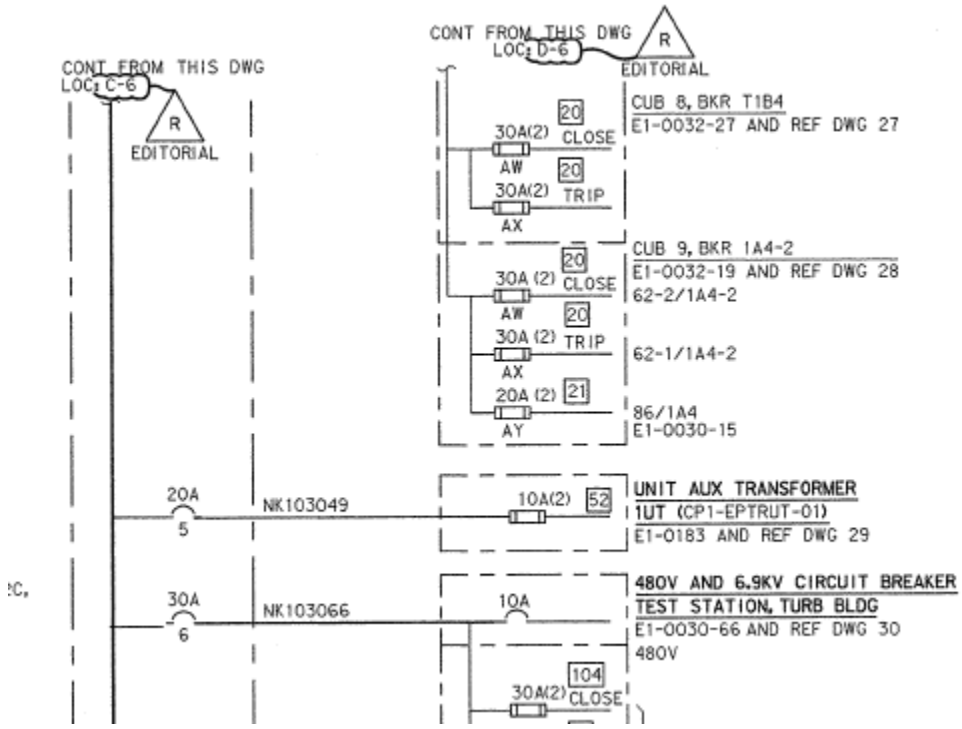

Comments / Reference: From OP51.SYS.DC1.LM, Page 15	Revision # 12/05/03

The non-safeguards 125/250 VDC bus uD2 is normally powered from Train B safeguards AC power via battery chargers BCuD2 and BCuD4 (**Figure 3**). The bus can also be provided power from non-safeguards AC via "spare" battery charger BCuD24. uD2 provides 250 VDC to large DC motors such as emergency lube oil pumps. The bus also supplies 125 VDC to several distribution panels. These distribution panels provide DC control power to all non-safeguards 6.9 KV and 480 V breakers (except RCP breakers) which use DC control power. The uD2 bus also supplies the two non-Class 1E inverters IVuC2 and IVuC3. These inverters provide 118 VAC power to numerous important non-Safeguards loads such as the BOP auxiliary relay racks.

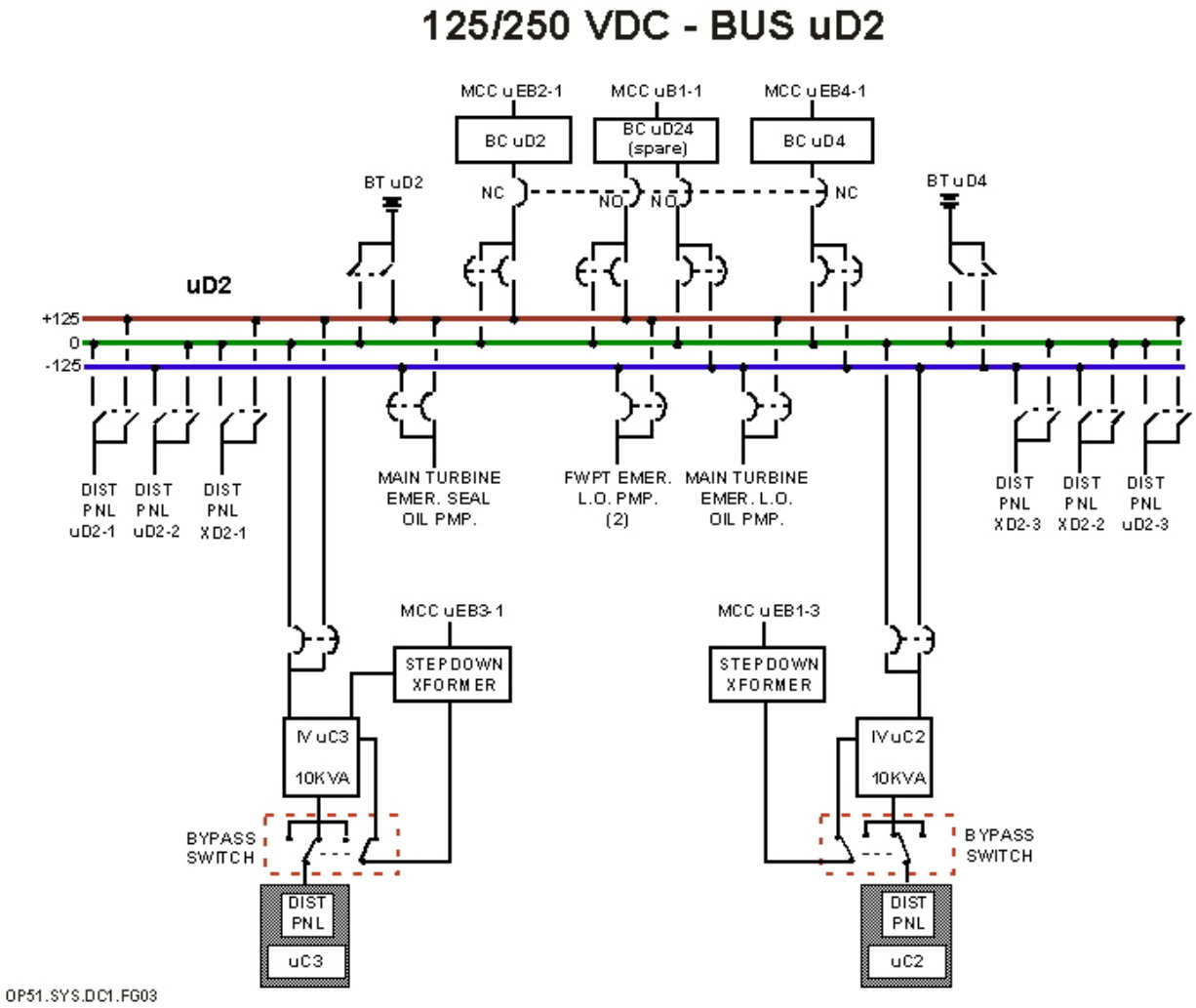

Figure 3 – 125/250 VDC – Bus uD2

Examination Outline Cross-reference:	Level	RO	SRO
	Tier #	2	
	Group #	1	
	K/A #	039 K1.01	
	Importance Rating	3.1	

Main and Reheat Steam System: Knowledge of the physical connections and/or cause-effect relationships between the MRSS and the following systems: SG

Proposed Question: Common 16

Which ONE (1) of the following is correct concerning a Main Steam Line Break inside Containment?

The contents of all four Steam Generators (SGs) will dump into Containment until...

A. the Main Steam Isolation Valves automatically close. The faulted SG will continue to depressurize until SG pressure equals Containment pressure.

B. manual isolation of the non-faulted SGs occurs. The faulted SG will continue to depressurize until SG pressure equals Containment pressure.

C. the Main Steam Isolation Valves automatically close. All SGs are isolated and no more steam will be released.

D. manual isolation of the non-faulted SGs occurs. The non-faulted SGs pressures equalize with each other and the faulted SG pressure equalizes with Containment pressure.

Proposed Answer: A

Explanation:

A. Correct. When the Main Steam Isolation Valves automatically close the faulted Steam Generator continues to depressurize until Steam Generator pressure equals Containment pressure.
B. Incorrect. Plausible because the faulted SG will continue to depressurize until SG pressure equals Containment pressure, however, manual isolation of the non-faulted SGs is incorrect.
C. Incorrect. Plausible because the Main Steam Isolation Valves will automatically close, however, the faulted Steam Generator continues to depressurize.
D. Incorrect. Plausible because manual isolation of the non-faulted Steam Generators might be considered correct, however, the non-faulted Steam Generators will not equalize with each other.

Technical Reference(s) PO21.SYS.MR1.LN, Page 37 Attached w/ Revision # See Comments / Reference

Proposed references to be provided during examination: None

Learning Objective: OPD1.EO2.XG4.401 — Given specific plant and monitoring equipment conditions, **DETERMINE** a faulted Steam Generator condition and **DESCRIBE** the actions associated with isolating the faulted Steam Generator in accordance with EOP-2.0.

OP51.SYS.MR1.OB05 — **STATE** the performance and design attributes of the following Main Steam System components, flowpaths, and features:

- Main Steam Isolation Valves

Question Source: Bank # SYS.MR1.OB37-2
Modified Bank # _____ (Note changes or attach parent)
New _____

Question History: Last NRC Exam _____

Question Cognitive Level: Memory or Fundamental Knowledge X
Comprehension or Analysis _____

10 CFR Part 55 Content: 55.41 4, 7
55.43 _____

Comments / Reference: From PO21.SYS.MR1.LN, Page 37	Revision # 02/28/05

MAIN STEAM LINE BREAKS

In the event of a Main Steam line break, the MSIVs prevent an uncontrolled steam release from more than one steam generator. The MSIVs provide steam generator blowdown protection for Main Steam line breaks inside the containment, outside the containment upstream of the isolation valves and downstream of the isolation valves.

With a Main Steam line break inside the containment, the SG with the faulted steam line will discharge completely into the containment. Containment pressure increase will depend on the mass of the SG and the initial pressure in Containment. The other steam generators would feed steam through the steam line equalizing header into the broken line and then into the containment. Since this could result in a significant pressure rise in the containment, flow protection is necessary to prevent the uncontrolled discharge of more than one steam generator. All MSIVs should receive a MSI signal from either high containment pressure of 6.2 psig or low steam line pressure of 605 psig (lead/lag). The MSIVs are capable of closing against steam flow from either direction within 5 seconds of receipt of these closure signals.

Examination Outline Cross-reference:	Level	RO	SRO
	Tier #	2	
	Group #	1	
	K/A #	059 K3.03	
	Importance Rating	3.5	

Main Feedwater System: Knowledge of the effect that a loss or malfunction of the MFW will have on the following: SGs

Proposed Question: Common 17

Given the following conditions with Unit 2 operating at 100% power:

- 2-SK-509C, Main Feedwater Pump B Turbine Auto Speed Controller, has been placed in MANUAL due to Auto Controller spiking.
- 2-SK-509B, Main Feedwater Pump A Turbine Auto Speed Controller and 2-SK-509A, Main Feedwater Pump Turbine Master Speed Controllers are in AUTO.
- During controller troubleshooting, PT-507, Steam Header Pressure input fails high.

Which ONE (1) of the following listed scenarios describes plant response to this event assuming NO operator action?

Steam Generator levels will...

A. increase; Turbine/Reactor trip on high level actuation of P-13.

B. decrease, Feedwater Control Valves open; no Reactor or Turbine trip will occur.

C. decrease; Reactor/Turbine trip on low Steam Generator level.

D. increase, Feedwater Control Valves close; no Reactor or Turbine trip will occur.

Proposed Answer: D

Explanation:

A. Incorrect. Plausible because Steam Generator levels will increase and it is therefore possible to get a high level actuation from SG hi-hi level trip at 81.5% on Unit 2, however, this would be actuated by P-14 as opposed to P-13.
B. Incorrect. Plausible because Steam Generator levels will decrease if the Steam Header Pressure Instrument failed low. If this were true, the Feedwater Control Valves would open to restore level and no Reactor or Turbine trip would occur.
C. Incorrect. Plausible because Steam Generator levels will decrease if the Steam Header Pressure Instrument failed low. This is caused by Main Feedwater Pump A speed decreasing while its associated controller is in AUTO. The Reactor/Turbine will trip on low Steam Generator level.
D. Correct. Per ABN-302, PT-507 failing high will cause Steam Generator level to increase due to Main Feedwater Pump A speed increasing. The Feedwater Control Valves will close and no Reactor or Turbine trip will occur.

Technical Reference(s) ABN-302, Section 9.2
OP51.SYS.SN1.LN, Page 27
Attached w/ Revision # See Comments / Reference

Proposed references to be provided during examination: None

Learning Objective: OP51.SYS.SN1.OB10
DESCRIBE the impact of the following malfunctions on operation of the Steam Generator Water Level Control System:

- Steam pressure transmitter

Question Source:
Bank # SYS.SN1.OB11-4
Modified Bank # _____ (Note changes or attach parent)
New _____

Question History: Last NRC Exam _____

Question Cognitive Level:
Memory or Fundamental Knowledge _____
Comprehension or Analysis X

10 CFR Part 55 Content:
55.41 5, 7
55.43 _____

Comments / Reference: From ABN-302, Section 9.2	Revision # 13

CPSES ABNORMAL CONDITIONS PROCEDURES MANUAL	UNIT 1 AND 2	PROCEDURE NO. ABN-302
FEEDWATER, CONDENSATE, HEATER DRAIN SYSTEM MALFUNCTION	REVISION NO. 13	PAGE 51 OF 77

9.2 Automatic Actions

NOTE: Control responses will only occur if failure is in channel selected for control.

a. Steam header pressure failure high will cause the feedwater pumps to increase in speed.

b. Steam header pressure failure low will cause the feedwater pumps to decrease in speed.

c. Steam line channel failure high will cause feedwater flow to increase and feedwater pump speed to increase.

d. Steam line channel failure low will cause feedwater flow to decrease and feedwater pumps to decrease in speed.

e. Feed header pressure failure high will cause the feedwater pumps to decrease in speed.

f. Feed header pressure failure low will cause the feedwater pumps to increase in speed.

g. Steam flow channel failure HIGH (steam flow failed high OR pressure compensation failed high) will cause feedwater flow to increase and feedwater pump speed to increase.

h. Steam flow channel failing LOW (steam flow failed low OR pressure compensation failed low) will cause feedwater flow to decrease and feedwater pump speed to decrease.

i. The FWPs will automatically trip on the following conditions:

- SI signal
- Low Vacuum - 17.5 in Hg
- Low Lube Oil Pressure - Pump end 7 psig
Turb end 4 psig
- Overspeed - 5663 to 5777 rpm
- Hi-Hi Steam Generator Level (P-14) - 84% (81.5%) NR level
- Thrust bearing wear
- Low Suction Pressure - 2/3 coincidence - approximately 220 psig
- Low Hydraulic Trip Header - 2/3 coincidence

Comments / Reference: From OP51.SYS.SN1.LN, Page 27	Revision # 06/11/07

Section 3 of ABN-709 addresses the failure of the steam header pressure (PT-507) instrument malfunction. The operator is directed to take manual control of feed pump speed and adjust as necessary to maintain program ΔP. Since PT-507 also controls steam dumps in the pressure mode the ABN directs the operator to check the steam dumps for proper operation.

On a high failure of the steam header pressure instrument (PT-507), the SGWLC system will respond as if the steam header pressure is much greater than the feed header pressure. The ΔP signal being measured will cause the FWP speed to rise to try to raise feed pressure higher than steam header pressure. FWPs will reach maximum speed causing the FCVs to throttle shut to maintain STEAM GENERATOR level.

On a low failure of the steam header pressure instrument (PT-507), the SGWLC system will respond as if the feed header pressure is much greater than the steam header pressure. The ΔP signal being measured will cause the FWP speed to lower to try to lower the feed pressure under the steam header pressure. FWPs will reach minimum speed and the FCVs throttle full open due to lowering steam generator level. The Reactor will trip due to LO LO SG LEVEL because the FWPs at minimum speed cannot maintain steam generator level.

Examination Outline Cross-reference:

Level	RO	SRO
Tier #	2	
Group #	1	
K/A #	059 A3.06	
Importance Rating	3.2	

Main Feedwater System: Ability to monitor automatic operation of the MFW, including: Feedwater isolation

Proposed Question: Common 18

Which ONE (1) of the following signals will initiate a Feedwater Isolation?

A. Phase A Containment Isolation, Safety Injection Signal, Reactor trip.

B. Phase A Containment Isolation, LO-LO Steam Generator level on 1 of 4 SGs, Safety Injection Signal.

C. Safety Injection Signal, Reactor trip - Turbine trip, low Main Steam Line pressure.

D. Safety Injection Signal, HI-HI Steam Generator level on 1 of 4 SGs, Reactor trip with low Tavg.

Proposed Answer: D

Explanation:

A. Incorrect. Plausible because the Safety Injection Signal is correct, however, Feedwater Isolation requires a Reactor trip with low Tavg. Phase A Containment Isolation is plausible because there are numerous isolations that occur on the Steam Generator with this signal. See Reference.
B. Incorrect. Plausible because the Safety Injection Signal is correct, however, feedwater isolation requires high Steam Generator level to actuate. Phase A Containment Isolation is plausible because there are numerous isolations that occur on the Steam Generator with this signal.
C. Incorrect. Plausible because the Safety Injection Signal is correct, however, the other signals do not cause a Feedwater Isolation.
D. Correct. These are the automatic signals that initiate a Feedwater Isolation.

Technical Reference(s) OP51.SYS.MF1.LN, Page 46
EOP-0.0A, Attachment 4
Attached w/ Revision # See Comments / Reference

Proposed references to be provided during examination: None

Learning Objective: OP51.SYS.MF1.OB11 **LIST** and **EXPLAIN** the Main Feedwater System design features which provide for the trips, permissives, and interlocks associated with the following:

- Feedwater Isolation

Question Source: Bank # SYS.ES1.OB05-2
Modified Bank # _____ (Note changes or attach parent)
New _____

Question History: Last NRC Exam _____

Question Cognitive Level: Memory or Fundamental Knowledge X
Comprehension or Analysis _____

10 CFR Part 55 Content: 55.41 4, 7
55.43 _____

Comments / Reference: From OP51.SYS.MF1.LN, Page 46	Revision # 05/31/07

FEEDWATER ISOLATION SIGNAL

A Feedwater Isolation Signal is generated if any one of the following conditions exists:

- Steam generator hi-hi level (P-14)
- Safety injection
- Reactor trip coincident with low T_{avg} (564°F)

Comments / Reference: From EOP-0.0A, Attachment 4	Revision # 8

CPSES EMERGENCY RESPONSE GUIDELINES	UNIT 1	PROCEDURE NO. EOP-0.0A
REACTOR TRIP OR SAFETY INJECTION	REVISION NO. 8	PAGE 35 OF 111

ATTACHMENT 4
PAGE 3 OF 6

PHASE A ISOLATION

COMPONENT LOCATION	EQUIPMENT NUMBER	DESCRIPTION	ESFAS TRAIN	MLB LOCATION
☐ CB-06	1/1-8152(1)	LTDN CNTMT ISOL VLV	B	1-MLB-4B2/4.9
☐ CB-06	1/1-8160(1)	LTDN CNTMT ISOL VLV	A	1-MLB-4A2/4.9
☐ *CB-08	1-ZL-2401AB(2)	SG 1 DRUM SMPL ISOL VLV	A	1-MLB-4A1/1.7
☐ *CB-08	1-ZL-2402AB(2)	SG 2 DRUM SMPL ISOL VLV	A	1-MLB-4A1/2.7
☐ *CB-08	1-ZL-2403AB(2)	SG 3 DRUM SMPL ISOL VLV	A	1-MLB-4A1/3.7
☐ *CB-08	1-ZL-2404AB(2)	SG 4 DRUM SMPL ISOL VLV	A	1-MLB-4A1/4.7
☐ *CB-08	1-ZL-2401BB(2)	SG 1 BLDN SMPL ISOL VLV	A	1-MLB-4A1/1.6
☐ *CB-08	1-ZL-2402BB(2)	SG 2 BLDN SMPL ISOL VLV	A	1-MLB-4A1/2.6
☐ *CB-08	1-ZL-2403BB(2)	SG 3 BLDN SMPL ISOL VLV	A	1-MLB-4A1/3.6
☐ *CB-08	1-ZL-2404BB(2)	SG 4 BLDN SMPL ISOL VLV	A	1-MLB-4A1/4.6
☐ *CB-08	1-ZL-2405AB(2)	SG 1 SMPL ISOL VLV	B	1-MLB-4B1/1.6
☐ *CB-08	1-ZL-2406AB(2)	SG 2 SMPL ISOL VLV	B	1-MLB-4B1/2.6
☐ *CB-08	1-ZL-2407AB(2)	SG 3 SMPL ISOL VLV	B	1-MLB-4B1/3.6
☐ *CB-08	1-ZL-2408AB(2)	SG 4 SMPL ISOL VLV	B	1-MLB-4B1/4.6
☐ CB-08	1-HS-2397(2)	SG 1 BLDN ISOL VLV	A/B	1-MLB-4A1/1.5
☐ CB-08	1-HS-2398(2)	SG 2 BLDN ISOL VLV	A/B	1-MLB-4B1/2.5
☐ CB-08	1-HS-2399(2)	SG 3 BLDN ISOL VLV	A/B	1-MLB-4A1/3.5
☐ CB-08	1-HS-2400(2)	SG 4 BLDN ISOL VLV	A/B	1-MLB-4B1/4.5

Examination Outline Cross-reference:

Level	RO	SRO
Tier #	2	
Group #	1	
K/A #	061 K2.02	
Importance Rating	3.7	

Auxiliary/Emergency Feedwater System: Knowledge of bus power supplies to the following: AFW electric drive pumps

Proposed Question: Common 19

Given the following conditions:

- Unit 1 is in MODE 3 with the Shutdown Rods withdrawn.
- Steam Generator levels are being maintained between 65% and 70% using the Motor Driven Auxiliary Feed Water (AFW) Pumps.
- An electrical perturbation results in an 86-1 Lockout Relay actuation on 6.9 KV Safeguards Bus 1EA1.

Assuming NO operator actions, which ONE (1) of the following describes the status of the Auxiliary Feedwater Pumps?

Motor Driven AFW Pump 1-01 is _____.
Motor Driven AFW Pump 1-02 is _____.
Turbine Driven Auxiliary Feedwater Pump is _____.

A. running.
running.
running.

B. stopped.
running.
running.

C. running.
stopped.
running.

D. stopped.
running.
stopped.

Proposed Answer: B

Explanation:

A. Incorrect. Plausible because this answer is correct with the exception of MDAFW Pump 1-01. Had an 86-2 Lockout occurred the Diesel Generator Breaker would have automatically closed onto the bus without operator action and MDAFW Pump 1-01 would be running. The TDAFW Pump starts when either Safeguards Bus is deenergized.

B. Correct. This is the correct configuration of the AFW Pumps given the conditions listed. The TDAFW Pump starts on Blackout Sequencer Operator Lockout.

C. Incorrect. Plausible if the power supplies to the MDAFW Pumps are reversed.

D. Incorrect. Plausible because this answer is correct with the exception of TDAFW Pump. The TDAFW Pump starts when either Safeguards Bus is deenergized.

Technical Reference(s): ABN-602, Step 2.3.3 Note; ABN-602, Attachment 1 — Attached w/ Revision # See Comments / Reference

Proposed references to be provided during examination: None

Learning Objective: OP51.SYS.AF1.OB05 — **IDENTIFY** the specific power supply including source of control power voltage for the Motor Driven Auxiliary Feedwater Pumps.

Question Source:
- Bank # SYS.AF1.OB05-2
- Modified Bank # _____ (Note changes or attach parent)
- New _____

Question History: Last NRC Exam _____

Question Cognitive Level:
- Memory or Fundamental Knowledge _____
- Comprehension or Analysis X

10 CFR Part 55 Content:
- 55.41 7
- 55.43 _____

Comments / Reference: From ABN-602, Step 2.3.3 Note	Revision # 7

CPNPP ABNORMAL CONDITIONS PROCEDURES MANUAL	UNIT 1 AND 2	PROCEDURE NO. ABN-602
RESPONSE TO A 6900/480V SYSTEM MALFUNCTION	REVISION NO. 7	PAGE 6 OF 99

2.3 Operator Actions

ACTION/EXPECTED RESPONSE	RESPONSE NOT OBTAINED

CAUTION:
- If power is greater than 10%. MDAFW should be allowed to run until the sequencer times out. The pumps will be stopped in Section 8.0, if not required. DO NOT throttle AFW above 10% power.
- The AFWP flow control and isolation valves are required to be fully open when above 10% power per TS 3.7.5.

NOTE:
- An emergency start will allow DG breaker to automatically close on a phase to ground bus fault (LOR 86-2/uEA1 or 86-2/uEA2).
- DG breaker will not automatically or manually close when a phase to phase bus fault (LOR 86-1) is present.
- An Operator Lockout signal from Blackout Sequencer (BOS) opens TDAFWP steam supply valves. The BOS also starts associated train MDAFWP. It may be necessary to limit AFW flow to prevent excessive RCS cooldown, or other adverse condition. Placing the TDAFW Pump in PULL-OUT with one safeguards bus de-energized will result in two inoperable AFW Pumps per TS 3.7.5. Throttling any train of AFW above 10% power renders the train INOPERABLE.
- Attachment 4 contains steps to deenergize the sequencer if the bus will not be needed. This would restore common equipment available to the other unit (e.g CRACs, UPS).

Comments / Reference: From ABN-602, Attachment 1	Revision # 7

CPNPP ABNORMAL CONDITIONS PROCEDURES MANUAL	UNIT 1 AND 2	PROCEDURE NO. ABN-602
RESPONSE TO A 6900/480V SYSTEM MALFUNCTION	REVISION NO. 7	PAGE 58 OF 99

ATTACHMENT 1
PAGE 1 OF 12

6900/480 V SWITCHGEAR UNDERVOLTAGE LOAD SHEDDING

This attachment lists breakers that trip on respective bus undervoltage.

CAUTION: Motor contactors for MOVs and motors powered from MCCs will drop out at approximately 70% of rated voltage and will not restart or continue to stroke when power is restored unless an auto or manual signal is present. A Control Board walkdown may be needed to ensure proper equipment operation.

NOTE:
- Common MCCs automatically transfer to their alternate source, if available, and back to normal when power is restored.
- Attachment 2 lists components started by Blackout Sequencer.

1. Unit 1 Train A Buses

   a. Bus 1EA1

      1) CCWP 1

      2) HVAC CENTRIFUGAL WATER CHILLER X-01

      3) MD AFWP 1

Comments / Reference: From ABN-602, Attachment 1	Revision # 7

CPNPP ABNORMAL CONDITIONS PROCEDURES MANUAL	UNIT 1 AND 2	PROCEDURE NO. ABN-602
RESPONSE TO A 6900/480V SYSTEM MALFUNCTION	REVISION NO. 7	PAGE 60 OF 99

ATTACHMENT 1
PAGE 3 OF 12

6900/480 V SWITCHGEAR UNDERVOLTAGE LOAD SHEDDING

2. Unit 1 Train B Buses

   a. Bus 1EA2

      1) SSWP 2

      2) HVAC CENTRIFUGAL WATER CHILLER X-02

      3) RHRP 2

      4) SIP 2

      5) CSP 2

      6) CSP 4

      7) CCP 2

      8) MD AFWP 2

Examination Outline Cross-reference:	Level	RO	SRO
	Tier #	2	
	Group #	1	
	K/A #	062 A4.04	
	Importance Rating	2.6	

AC Electrical Distribution System: Ability to manually operate and/or monitor in the control room: Local operation of breakers

Proposed Question: Common 20

Given the following conditions:

- Residual Heat Removal Pump 1-01 is operating during a plant heat up.
- The Residual Heat Removal Pump 1-01 control power fuses blow.

Which ONE (1) of the following describes how the Main Control Board Residual Heat Removal Pump indication and local breaker control is affected by the loss of control power?

A. Main Control Board red / green running indications will be lost.
Local OPEN / CLOSE light indication is available, and local breaker control will be lost until control power is restored.

B. Main Control Board red / green running indications will be lost.
Local OPEN / CLOSE mechanical indication is available, and local breaker control is possible without the control power.

C. Main Control Board red / green running indications will be available.
Local OPEN / CLOSE light indication is available, and local breaker control is possible without the control power.

D. Main Control Board red / green running indications will be available.
Local OPEN / CLOSE mechanical indication is available, and local breaker control will be lost until control power is restored.

Proposed Answer: B

Explanation:

A. Incorrect. Plausible because Main Control Board red / green running indications will be lost, however, local breaker control is possible without control power.
B. Correct. With a loss of control power, Main Control Board red / green running indications will be lost. Local breaker control is still possible.
C. Incorrect. Plausible because local breaker control is possible without control power, however, local OPEN / CLOSE light indication is NOT available.
D. Incorrect. Plausible because local OPEN/CLOSE indication is available, however, Main control board indications are lost and local control is available.

Technical Reference(s) SOP-694, Attachment 8.B
Electrical Print E1-0031, Sheet 49
Attached w/ Revision # See Comments / Reference

Proposed references to be provided during examination: None

Learning Objective: OP51.SYS.RH1.OB17
EVALUATE the effect a loss of the following systems has on the Residual Heat Removal System and components:

- DC Power

Question Source: Bank # SYS.RH1.OB17-7
Modified Bank # _____ (Note changes or attach parent)
New _____

Question History: Last NRC Exam _____

Question Cognitive Level: Memory or Fundamental Knowledge _____
Comprehension or Analysis X

10 CFR Part 55 Content: 55.41 7
55.43 _____

Comments / Reference: From SOP-694, Attachment 8.B | Revision # 5

CPSES STATION ADMINISTRATION MANUAL		PROCEDURE NO. STA-694
STATION VERIFICATION ACTIVITIES	REVISION NO. 5	PAGE 31 OF 49

ATTACHMENT 8.B
PAGE 7 OF 9

GUIDELINE ON COMPONENT VERIFICATION OF OPERATIONAL ACTIVITIES

4.3 To perform a Verification of 6.9KV breaker position, one of the following items should be monitored for the desired breaker position:

- Local "OPEN" or "CLOSE" breaker position indicating lights on front panel of breaker.
- Mechanical "OPEN" or "CLOSE" indicator on breaker housing.
- Control Room handswitch indication, if applicable.

4.4 If a 6.9KV or 480V switchgear breaker has been racked out for any reason, after being racked in and prior to declaring the affected system "Technical Specification" OPERABLE, the breaker should be cycled or closed while in the "CONNECT" position (e.g., motor bump, etc.), unless the breaker is cycled while performing a system operability test per procedure.

Comments / Reference: From Electrical Print E1-0031, Sheet 49	Revision # CP-8

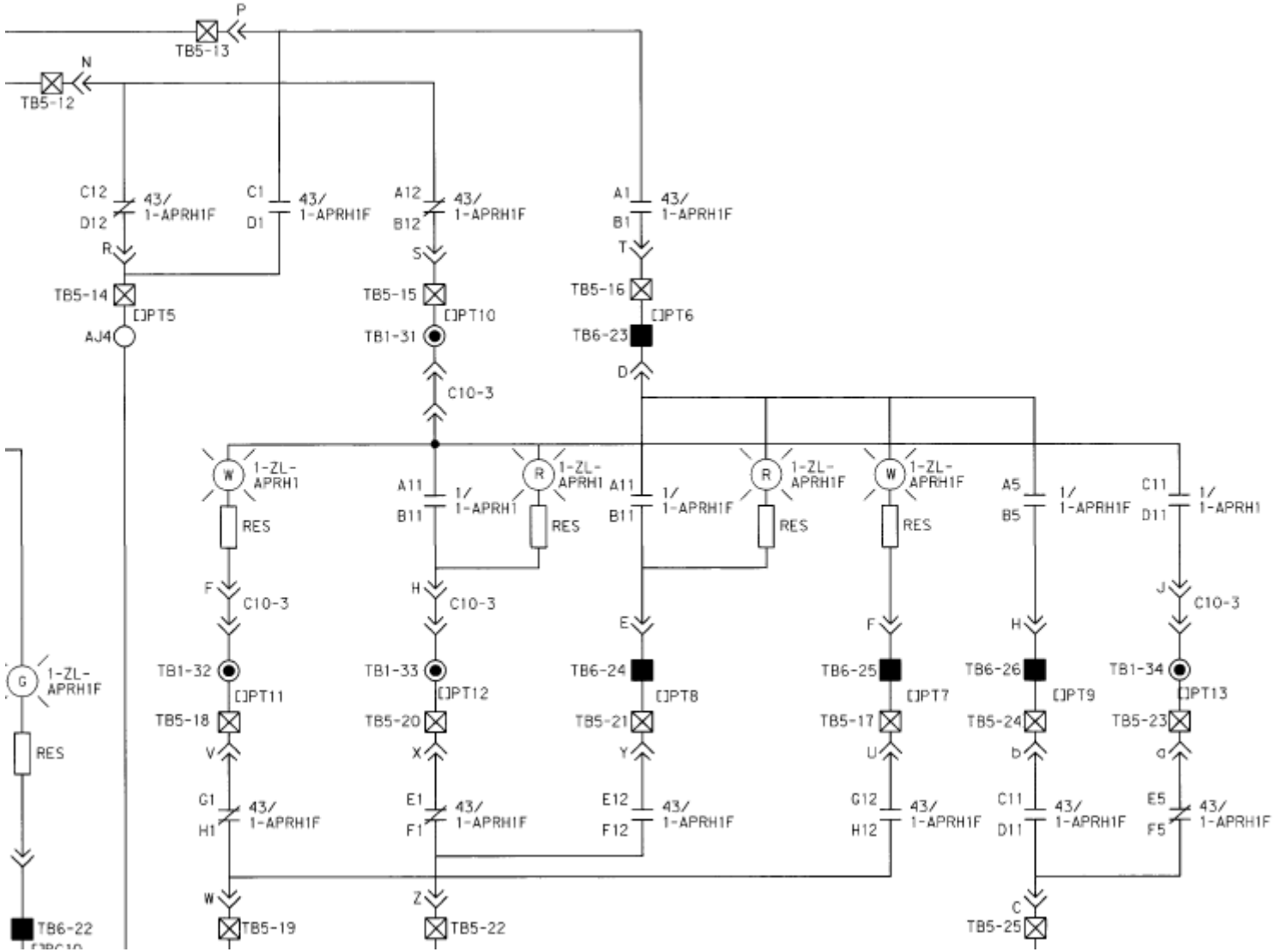

Comments / Reference: From Electrical Print E1-0031, Sheet 49	Revision # CP-8

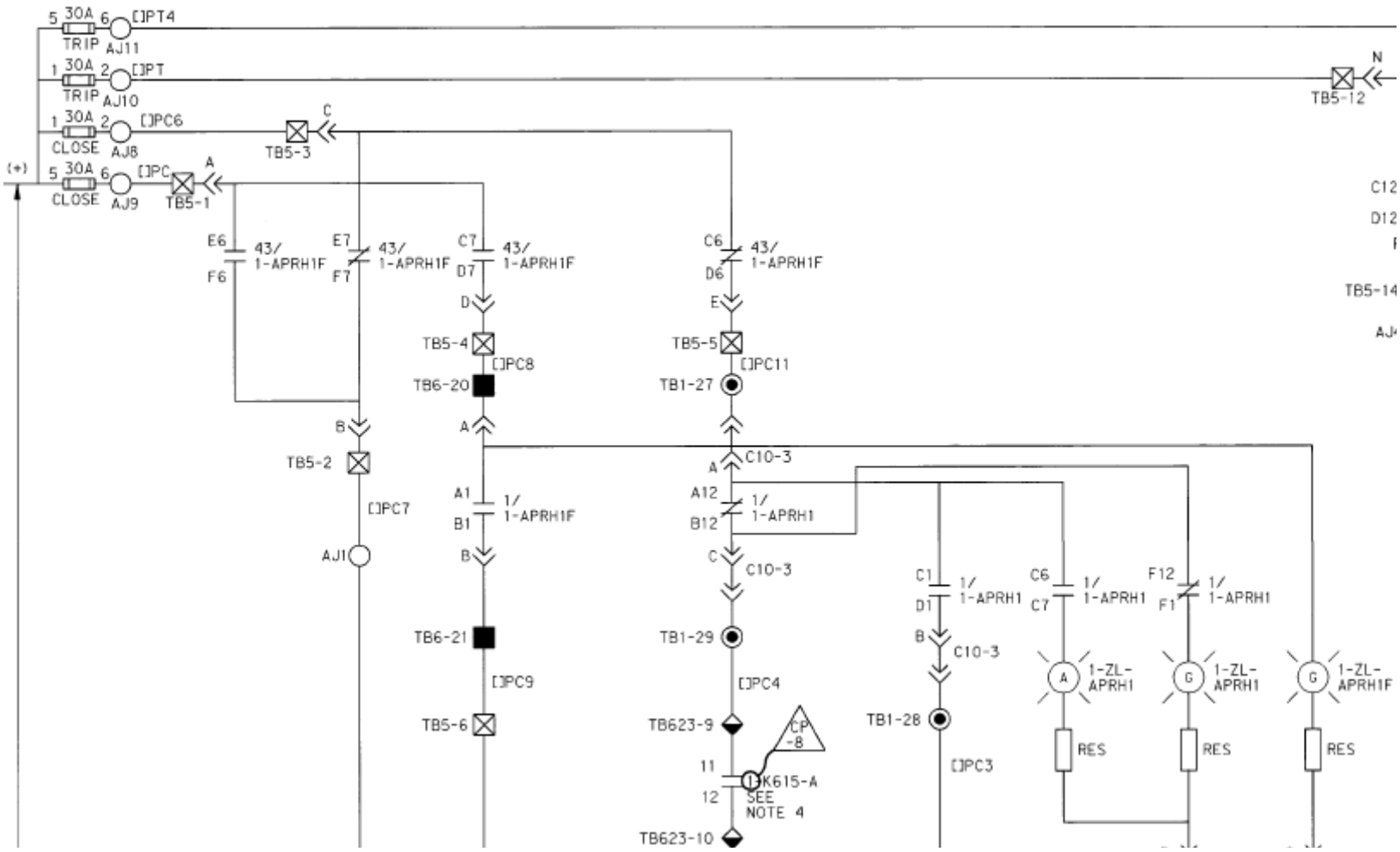

Examination Outline Cross-reference:

Level	RO	SRO
Tier #	2	
Group #	1	
K/A #	063 K4.01	
Importance Rating	2.7	

DC Electrical Distribution System: Knowledge of DC electrical system design features and/or interlocks that provide for the following: Manual/automatic transfers of control

Proposed Question: Common 21

Which ONE (1) of the following identifies how the 125/250 VDC Common Non-Safeguards DC Distribution Panels are prevented from being supplied by both Units during transfer operations?

A. Closing the incoming feeder breaker sends a trip signal to the off going feeder breaker.

B. A selector switch only allows the selection of one feeder breaker at a time.

C. Electrical contacts prevent closing both feeder breakers simultaneously.

D. A mechanical slide bar prevents closing both feeder breakers at the same time.

Proposed Answer: D

Explanation:

A. Incorrect. Plausible because this is used on AC Systems at CPNPP, however, not on the 125/250 VDC System.
B. Incorrect. Plausible if thought that the 125/250 VDC Non-Safeguards DC Distribution Panels are equipped with this type of control.
C. Incorrect. Plausible because this is used on AC Systems at CPNPP, however, not on the 125/250 VDC System.
D. Correct. A mechanical slide-bar prevents parallel operation.

Technical Reference(s) SOP-606A, Step 5.3.1 Attached w/ Revision # See Comments / Reference

Proposed references to be provided during examination: None

Learning Objective: OP51.SYS.DC1.OB12

LIST and **EXPLAIN** the DC Electrical System design features which provide for the trips, permissives, and interlocks associated with the following:

- DC Bus power sources

Question Source: Bank # SYS.DC1.OB12-4
Modified Bank # _____ (Note changes or attach parent)
New _____

Question History: Last NRC Exam _____

Question Cognitive Level: Memory or Fundamental Knowledge X
Comprehension or Analysis _____

10 CFR Part 55 Content: 55.41 7
55.43 _____

Comments / Reference: From SOP-606A, Step 5.3.1 | Revision # 10

CPSES SYSTEM OPERATING PROCEDURE MANUAL	UNIT 1 AND COMMON	PROCEDURE NO. SOP-606A
24/48V & 125/250V DC SWITCHGEAR AND DISTRIBUTION SYSTEMS, BATTERIES & BATTERY CHARGERS	REVISION NO. 10	PAGE 41 OF 69

5.3 Transferring Energized Panels

5.3.1 Transferring 125/250 VDC Switchboard 1D2 Common Distribution Panels from Unit 1 Supply to Unit 2 Supply with Loads Energized

The following describes the steps to transfer one, two, or three Distribution Panels; XD2-1, XD2-2 or XD2-3, from Unit 1 supply to Unit 2 supply with loads energized. The transfer is intended to be performed with the mechanical interlock slide-bar installed. The slide bar will prevent both breakers from being closed at the same time, and make the evolution a break-before-make transfer. If desired, sections 5.3.3, 5.3.4, and 5.3.5 provide instructions for a bumpless transfer.

A. Select the distribution panel to be transferred.

☐ • CPX-ECDPND-01, DC DISTRIBUTION PANEL XD2-1

☐ • CPX-ECDPND-02, DC DISTRIBUTION PANEL XD2-2

☐ • CPX-ECDPND-03, DC DISTRIBUTION PANEL XD2-3

B. With the slide bar installed, simultaneously operate the supply breakers to the specified position for the selected distribution panel.

Examination Outline Cross-reference:	Level	RO	SRO
	Tier #	2	
	Group #	1	
	K/A #	063 K2.01	
	Importance Rating	2.9	

DC Electrical Distribution System: Knowledge of bus power supplies to the following: Major DC loads

Proposed Question: Common 22

Given that a bus fault has caused 125/250 VDC Electrical Distribution Bus 1D2 to deenergize, which ONE (1) of the following plant components will be directly affected by the loss of DC power?

A. Main Turbine Extended Turbine Protection (ETP) is lost.

B. A loss of Main Generator control due to loss of the EHC control power.

C. Train B Reactor trip and Bypass breakers cannot shunt trip.

D. Main Feedwater Pumps cannot be electrically tripped.

Proposed Answer: D

Explanation:

A. Incorrect. Plausible because this occurs with a loss of DC Bus 1D1.
B. Incorrect. Plausible because this occurs with a loss of DC Bus 1D1.
C. Incorrect. Plausible because this would be correct for DC Bus 1ED2 but not in DC Bus 1D2.
D. Correct. The Main Feedwater Pumps cannot be electrically tripped; however, the mechanical trip is still available.

Technical Reference(s) OP51.SYS.DC1.LN, Pages 38 & 39 Attached w/ Revision # See Comments / Reference

Proposed references to be provided during examination: None

Learning Objective: OP51.SYS.DC1.OB09 **STATE** the Major Bus Loads for the following DC systems:

- 125/250 Volt DC (Bus uD2)

Question Source: Bank # SYS.DC1.OB09-1
Modified Bank # _____ (Note changes or attach parent)
New _____

Question History: Last NRC Exam _____

Question Cognitive Level: Memory or Fundamental Knowledge _____
Comprehension or Analysis X

10 CFR Part 55 Content: 55.41 7
55.43

Comments / Reference: From OP51.SYS.DC1.LN, Page 38 & 39	Revision # 12/05/03

uD2

This bus or switchboard supplies a number of distribution panels, inverters and DC pumps. A major effect of a loss of uD2 would be the loss of DC control power to all of the non safeguards 6.9 KV and 480 V breakers, excluding the RCP breakers. Loss of DC control power would prevent breakers from tripping open when required and would prevent closing breakers that are open.

Another consequence of losing uD2 is that the Main Turbine would not be able to be tripped from the Control Room or from automatic signals. The generator would lose its automatic trip capability, but the output breakers could be opened manually from the control room. In EOP-0.0 the required response for a failure of the Main Turbine to trip when required is to trip the EHC pump breakers. Since the EHC pump breakers would have lost control power, tripping the Turbine would have to be accomplished locally. The control room operator would retain the ability to reduce turbine speed using the hydraulic speed changer. The inability of the Turbine to trip when required would violate the requirements of TS 3.3.2, Table 3.3.2-1, Item 5 which requires that the Main Turbine automatically trip on a Safety Injection or SG high-high level. With both turbine trip channels supplied from uD2, this would be a TS 3.0.3 entry.

The Main Feed Pumps would not be able to process any electrical trips on a loss of uD2. The feed pump trip solenoid valve SV12 is energized by 125 VDC. The emergency governor (mechanical overspeed device) could still function, if required.

Comments / Reference: From OP51.SYS.DC1.LN, Page 39	Revision # 12/05/03

uD3

This bus or switchboard supplies the plant computer inverters and distribution panel uD3-1. uD3-1 supplies control power to the RCP breakers. 2D3-1 feeds the new turbine control circuits.

Loss of uD3 would lead to a TRM TS 13.8.32 Action Statement due to loss of primary overcurrent protection for the Containment Penetrations serving the RCPs. RCP breakers could not be remotely operated and they would not automatically trip when required. The RCPs would still have the backup Containment Penetration Overcurrent Protection available (non-safeguards 6.9 KV normal and alternate feeder breaker trips are supplied from uD2).

Comments / Reference: From OP51.SYS.DC1.LN, Page 39	Revision # 12/05/03

Some of the other more significant effects of the loss of uED2:

- Train B Reactor trip and bypass breakers would not receive shunt trips (although undervoltage coils would still function).

Comments / Reference: From OP51.SYS.DC1.LN, Page 38	Revision # 12/05/03

uD1

This bus or switchboard supplies DC control power to the Allis Chalmers turbine generator control and protection systems. These turbine generator loads have dual power supplies, one supplied by 480 VAC and the other supplied by uD1. If the AC source were not available, a loss of uD1 would lead to loss of generator control due to the loss of:

- EHC control
- Seal Steam Control
- Hydraulic Control Equipment Rack
- Electronic Generator Protection (EGP), and
- Extended Turbine Protection (ETP)

Comments / Reference: From OP51.SYS.DC1.LN, Page 38	Revision # 12/05/03

uD1

This bus or switchboard supplies DC control power to the Allis Chalmers turbine generator control and protection systems. These turbine generator loads have dual power supplies, one supplied by 480 VAC and the other supplied by uD1. If the AC source were not available, a loss of uD1 would lead to loss of generator control due to the loss of:

- EHC control
- Seal Steam Control
- Hydraulic Control Equipment Rack
- Electronic Generator Protection (EGP), and
- Extended Turbine Protection (ETP)

Comments / Reference: Exam Bank Question SYS.DC1.OB09-1	Revision # 07/25/05

Changed Distractor A from “Reactor Coolant Pump breaker control power is lost” to Distractor listed.
Changed Distractor B from “Condensate Pumps trip” to Distractor listed.

Examination Outline Cross-reference:	Level	RO	SRO
	Tier #	2	
	Group #	1	
	K/A #	064 A2.08	
	Importance Rating	2.7	

Emergency Diesel Generator System: Ability to (a) predict the impacts of the following malfunctions or operations on the EDG system; and (b) based on those predictions, use procedures to correct, control, or mitigate the consequences of those malfunctions or operations: Consequences of opening/closing breakers between buses (VARS, out-of-phase, voltage)

Proposed Question: Common 23

Given the following conditions:

- Emergency Diesel Generator (EDG) 1-01 is being paralleled to Safeguards Bus 1EA1.
- Emergency Diesel Generator Breaker 1EG1 is closed with EDG voltage slightly less than Safeguards Bus 1EA1 voltage.

Which ONE (1) of the following:

1.) Identifies the impact on the Emergency Diesel if voltages are not matched?

2.) What action should be taken?

A. 1.) EDG VAR meter will move in the negative (-) VAR (LEAD-IN) direction.
   2.) Place the EDG Voltage Control Switch in the RAISE position to zero out the VAR load.

B. 1.) EDG VAR meter will move in the positive (+) VAR (LAG-OUT) direction.
   2.) Place the EDG Voltage Control Switch in the LOWER position to zero out the VAR load.

C. 1.) EDG VAR meter will move in the negative (-) VAR (LEAD-IN) direction.
   2.) Place the EDG Voltage Control Switch in the LOWER position to zero out the VAR load.

D. 1.) EDG VAR meter will move in the positive (+) VAR (LAG-OUT) direction.
   2.) Place the EDG Voltage Control Switch in the RAISE position to zero out the VAR load.

Proposed Answer: A

Explanation:

A. Correct. With EDG voltage less than bus voltage when the breaker is closed, a negative VAR load will be "absorbed into" the Emergency Diesel Generator. The Voltage Control Switch is placed in RAISE to increase generator terminal voltage and zero out the VAR load.
B. Incorrect. Plausible because this would be the correct action if generator voltage were higher than Safeguards Bus voltage when the breaker was closed and it was desired to zero out the VAR load.
C. Incorrect. Plausible because the VAR meter will move in the negative direction, however, placing the EDG Voltage Control Switch in lower will cause more VARs to be absorbed into the Generator.
D. Incorrect. Plausible because the action is correct, however, positive VARs would only be created if EDG voltage were higher than Safeguards Bus voltage when the breaker was closed.

Technical Reference(s) SOP-609A, Step 5.6.E Attached w/ Revision # See Comments / Reference

Proposed references to be provided during examination: None

Learning Objective: OP51.SYS.ED1.OB04 **STATE** the location (if applicable) of the following indications and controls, and **DESCRIBE** how each is interpreted or used to predict, monitor, or control changes in the Emergency Diesel Generator System:

- Voltage Regulator Raise/Lower Switch

OP51.SYS.ED1.OB08 **STATE** the physical connections and **EVALUATE** the cause-effect relationships between the Emergency Diesel Generator System and the following systems, components or events:

- AC Distribution System

Question Source: Bank # ____ Modified Bank # ____ (Note changes or attach parent) New X

Question History: Last NRC Exam ____

Question Cognitive Level: Memory or Fundamental Knowledge ____ Comprehension or Analysis X

10 CFR Part 55 Content: 55.41 7 55.43 ____

Comments / Reference: From SOP-609A, Step 5.6.E	Revision # 17

CPSES SYSTEM OPERATING PROCEDURE MANUAL	UNIT 1	PROCEDURE NO. SOP-609A
DIESEL GENERATOR SYSTEM	REVISION NO. 17	PAGE 45 OF 96

5.6

NOTE: Use of V-IN and V-RUN to adjust voltage prior to synchronization is the preferred method. This method adjusts DG voltage approximately 50 to 100 volts greater than SFGD Bus voltage. The following equipment metering is available as an alternate method.

DG Voltage	SFGD Bus Voltage
V-1EG1, DG1 VOLT (CB-11) OR V6710A, DG 1 VOLT (Computer Pt.)	V-1EA1, BUS 1EA1 VOLT(CB-11) OR V6101A, BUS 1EA1 VOLT (Computer Pt.)
V-1EG2, DG2 VOLT (CB-11) OR V6720A, DG 2 VOLT (Computer Pt.)	V-1EA2, BUS 1EA2 VOLT (CB-11) OR V6112A, BUS 1EA2 VOLT (Computer Pt.)

☐ E. Using DG VOLT CTRL, gradually adjust V-IN on the synchroscope 1 to 2 volts higher than V-RUN on the synchroscope.

☐ F. Using the DG SPD CTRL handswitch, adjust the speed so the synchroscope is moving 2 to 4 RPM in the fast direction.

CAUTION: Following DG Output Breaker closure, load should be raised promptly to prevent Reverse Power Trip. The DG will trip if the Generator is motorized with >34.5 KW IN for greater than 8 seconds.

G. Close the DG breaker when the synchroscope is slightly before the 12 o'clock position AND moving slowly in the fast direction.

☐ • CS-1EG1, DG 1 BKR 1EG1

☐ • CS-1EG2, DG 2 BKR 1EG2

☐ H. Immediately raise DG load to 2.2 to 2.5 MW using the DG SPD CTRL handswitch in the RAISE direction.

☐ I. Adjust DG KVAR for 0-500 KVAR out using the DG VOLT CTRL handswitch.

J. Turn synchroscope OFF.

☐ • SS-1EG1, BKR 1EG1 SYNCHROSCOPE

☐ • SS-1EG2, BKR 1EG2 SYNCHROSCOPE

Examination Outline Cross-reference:	Level	RO	SRO
	Tier #	2	
	Group #	1	
	K/A #	064 G 2.2.38	
	Importance Rating	3.6	

Emergency Diesel Generator System: Equipment Control: Knowledge of conditions and limitations in the facility license

Proposed Question: Common 24

Unit 1 is in MODE 1 and Emergency Diesel Generator (EDG) 1-01 has been declared INOPERABLE.

Which ONE (1) of the following ACTIONS below must be completed within one (1) hour?

A. Verify correct breaker alignment and indicated power availability for each required offsite circuit per OPT-215, Class 1E Electrical Systems Operability.

B. Perform OPT-214A, Diesel Generator Operability Test for Train B Emergency Diesel Generator.

C. Perform Turbine Driven Auxiliary Feedwater Pump Operability Test per OPT-206A, Auxiliary Feedwater System.

D. Verify fuel oil level within limits for Diesel Generator 1-02 per OPT-214A, Diesel Generator Operability Test.

Proposed Answer: A

Explanation:

A. Correct. This is the required one (1) hour action per Technical Specification LCO 3.8.1.
B. Incorrect. Plausible because this is a valid Technical Specification requirement, however, it is performed every 31 days.
C. Incorrect. Plausible because this is a valid Technical Specification requirement, however, it is performed every 18 months.
D. Incorrect. Plausible because this is a valid Technical Specification requirement, however, it is performed every 184 days.

Technical Reference(s)		
	Tech Spec LCO 3.8.1	Attached w/ Revision # See Comments / Reference
	Tech Spec SR 3.8.1.1	
	Tech Spec SR 3.8.1.2	
	Tech Spec SR 3.8.1.7	
	Tech Spec SR 3.8.1.17	

Proposed references to be provided during examination: None

Learning Objective: OP51.SYS.ED1.OB23

LIST and **DESCRIBE** the following Technical Specifications (i.e. LCOs, action statements and conditional surveillance requirements of one hour and less, if applicable) for the Emergency Diesel Generator System:

- AC Sources Operating 3.8.1

Question Source: Bank # SYS.ED1.OB22-7
Modified Bank # _____ (Note changes or attach parent)
New _____

Question History: Last NRC Exam _____

Question Cognitive Level: Memory or Fundamental Knowledge X
Comprehension or Analysis _____

10 CFR Part 55 Content: 55.41 10
55.43 _____

Comments / Reference: From Tech Spec LCO 3.8.1.B | Amendment # 64

AC Sources - Operating
3.8.1

ACTIONS (continued)

CONDITION	REQUIRED ACTION	COMPLETION TIME
B. One DG inoperable.	B.1 Perform SR 3.8.1.1 for the required offsite circuit(s).	1 hour AND Once per 8 hours thereafter

Comments / Reference: From Tech Spec SR 3.8.1.1 | Amendment # 64

SURVEILLANCE REQUIREMENTS

SURVEILLANCE		FREQUENCY
SR 3.8.1.1	Verify correct breaker alignment and indicated power availability for each required offsite circuit.	7 days

Comments / Reference: From Tech Spec SR 3.8.1.2	Amendment # 64

	SURVEILLANCE	FREQUENCY
SR 3.8.1.2	----------NOTES---------- 1. Performance of SR 3.8.1.7 satisfies this SR. 2. All DG starts may be preceded by an engine prelube period and followed by a warmup period prior to loading. 3. A modified DG start involving idling and gradual acceleration to synchronous speed may be used for this SR as recommended by the manufacturer. When modified start procedures are not used, the time, voltage, and frequency tolerances of SR 3.8.1.7 must be met. ---------- Verify each DG starts from standby conditions and achieves steady state voltage ≥ 6480 V and ≤ 7150 V, and frequency ≥ 58.8 Hz and ≤ 61.2 Hz.	31 days

Comments / Reference: From Tech Spec SR 3.8.1.17	Amendment # 124

SR 3.8.1.17	----------NOTE---------- This Surveillance shall not normally be performed in MODE 1 or 2. However, portions of the Surveillance may be performed to reestablish OPERABILITY provided an assessment determines the safety of the plant is maintained or enhanced. ---------- Verify, with a DG operating in test mode and connected to its bus, an actual or simulated SI actuation signal overrides the test mode by: a. Returning DG to ready-to-load operation; and b. Automatically energizing the emergency load from offsite power.	18 months

(continued)

Comments / Reference: From Tech Spec SR 3.8.1.7	Amendment # 124

SR 3.8.1.7	----------NOTE---------- All DG starts may be preceded by an engine prelube period. ---------- Verify each DG starts from standby condition and achieves: a. in ≤ 10 seconds, voltage ≥ 6480 V and frequency ≥ 58.8 Hz; and b. steady state, voltage ≥ 6480 V and ≤ 7150V, and frequency ≥ 58.8 Hz and ≤ 61.2 Hz.	184 days

Examination Outline Cross-reference:	Level	RO	SRO
	Tier #	2	
	Group #	1	
	K/A #	073 A4.01	
	Importance Rating	3.9	

Process Radiation Monitoring System: Ability to manually operate and/or monitor in the control room: Effluent release

Proposed Question: Common 25

Given the following conditions:

- Unit 1 and Unit 2 are in MODE 5 with 3 Circulating Water Pumps in each Unit operating.
- A discharge from X-02, Plant Effluent Holdup and Monitor Tank (PET) to Outfall 004 via 1-HV-WM181, OUTFALL 101 CWS DISCH VLV is in progress.

Which ONE (1) of the following conditions would require the manual termination of the discharge (assuming that none of the automatic functions operated as designed) and what actions must be taken?

A. Two (2) of the Unit 2 Circulating Water Pumps trip.
Sample PET X-02 for activity, revise the existing permit, and reinitiate the release.

B. A valid high alarm on X-RE-5253, Liquid Waste Effluent Radiation Monitor.
Close the current permit, resolve the cause of the termination, and initiate a new permit.

C. A valid high alarm on X-RE-5253, Liquid Waste Effluent Radiation Monitor.
Sample PET X-02 for activity, revise the existing permit, and reinitiate the release.

D. One (1) of the Unit 2 Circulating Water Pumps trip.
Close the current permit, resolve the cause of the termination, and initiate a new permit.

Proposed Answer: B

Explanation:

A. Incorrect. Plausible because tripping of 2 CWPs when 3 are running will violate conditions set forth in STA-603, however, it is the total number of CWPs and the Unit 1 CWPs are still operating.
B. Correct. A valid high radiation alarm requires termination of the release. Additionally, any termination of a release due to high radiation requires resolving the cause of the high radiation and the issuance of a new permit.
C. Incorrect. Plausible because a valid high alarm requires release termination, however, these actions are not appropriate when a valid high radiation is received.
D. Incorrect. Plausible because the actions are correct, however, the initiating condition is not. Tripping of 1 CWPs when 3 are running will not violate conditions set forth in STA-603.

Technical Reference(s) RWS-103, Step 5.2.6
STA-603, Steps 6.2.9 and 6.2.12
Attached w/ Revision # See Comments / Reference

Proposed references to be provided during examination: None

Learning Objective: OPD1.ADM.XA8.OB103
Given a valid automatic termination of a planned radioactive effluent release, **EVALUATE** and **DETERMINE** the proper recovery from automatic termination of a planned radioactive effluent release in accordance with the applicable portion of STA-603.

Question Source:
Bank # ADM.XA8.OB03-3
Modified Bank # _____ (Note changes or attach parent)
New _____

Question History: Last NRC Exam _____

Question Cognitive Level:
Memory or Fundamental Knowledge _____
Comprehension or Analysis X

10 CFR Part 55 Content:
55.41 11, 13
55.43 _____

Comments / Reference: From RWS-103, Step 5.2.6.B	Revision # 15

CPNPP RADWASTE SYSTEMS MANUAL	UNIT COMMON	PROCEDURE NO. RWS-103
DRAIN CHANNEL B	REVISION NO. 15	PAGE 25 OF 249

5.2.6 Discharging PET X-02 with Pump X-02 with Radiation Monitor Operable

This section describes the steps to discharge Plant Effluent Holdup and Monitor Tank (PET) X-02 to Outfall 101 with pump X-02. Discharges with X-RE-5253 inoperable are preformed per section 5.4.6 of this procedure. Unless otherwise noted all evolutions are to be performed from the FB 810' PET Control Panel Rm 252.

☐ A. Ensure PET X-02 is in recirculation with Pump X-02 per Section 5.2.5.

NOTE: Unit 1 or Unit 2 Circulating Water System may be used as dilution flow for discharges to Outfall 101. Select the Unit for dilution with the most Circulating Water Pumps operating. A minimum of 2 Circulating Water Pumps must be in operation for the Unit selected for dilution flow.

B. Select either Unit 1 or Unit 2 Circulating Water System for dilution flow by verifying a minimum of 2 CW Pumps operating for the Unit selected:

☐ • Unit 1

☐ • Unit 2

NOTE: Steps C. and D. may be performed simultaneously.

C. WHEN informed that STA-603-10 form is completed by the appropriate group, THEN perform the following:

1) Coordinate with the appropriate group to reset AND verify setpoints on X-RE-5253 (LWE076), LIQUID WASTE PROCESSING DISCHARGE RADIATION DETECTOR, as required. _____

Comments / Reference: From RWS-103, Step 5.2.6.L	Revision # 15

L. IF notified of an X-RE-5253 (LWE076) High Alarm, THEN terminate or verify termination of the discharge by performing Step 5.2.6 N., AND notify the Shift Manager and Radwaste Supervisor. _____

Comments / Reference: From RWS-103, Step 5.2.6.I	Revision # 15

CPNPP RADWASTE SYSTEMS MANUAL	UNIT COMMON	PROCEDURE NO. RWS-103
DRAIN CHANNEL B	REVISION NO. 15	PAGE 30 OF 249

NOTE:
- X-RV-5253 is a Key-Operated Switch and requires flow to be established to remain OPEN with hand switch in "AUTO". One indication of sufficient flow is alarm window 2.6 LWPS EFFLUENT ALERT on the LPP clearing.
- IF contacted by Control Room of Alert or High Alarm during step 5.2.6 I. 2), THEN immediately secure discharge per step 5.2.6 N., and contact Duty Radwaste Supervisor.

5.2.6 I. 2) Place X-HS-5253, LAUNDRY HOLDUP MONITOR TANK, to "OPEN" for approximately 10 seconds, THEN release hand switch. _____

Comments / Reference: From STA-603, Steps 6.2.9 and 6.2.12	Revision # 19

CPSES STATION ADMINISTRATION MANUAL		PROCEDURE NO. STA-603
CONTROL OF STATION RADIOACTIVE EFFLUENTS	REVISION NO. 19	Page 11 of 28

6.2 Batch Liquid Radioactive Effluent Releases (continued)

6.2.7 Any release for which an analysis was done that exceeds the daily average limits for TSS or Oil and Grease requires the approval of the Chemistry Manager.

6.2.8 Any release for which an analysis was done that exceeds the daily maximum limits for TSS or Oil and Grease or is outside of the acceptable pH range shall not be approved.

6.2.9 A minimum of two circulating water pumps shall be operating during all radioactive liquid batch releases.

6.2.10 Pre-release calculations of radioactive effluent concentrations, radiation monitor alarm set points, and doses shall be based on the maximum tank volumes and effluent pump flow rates, and the minimum dilution (e.g., circulating water) flow rate.
[C08717]

6.2.11 The Shift Manager should approve all batch releases to Outfall 004 from the PET, WMT, and LHMTs and the Waste Water Holdup Tanks.
[C00009]

6.2.12 If a batch liquid release is automatically terminated due to a valid high radiation alarm from the liquid waste effluent monitor, X-RE-5253 (LWE-076), the permit should be closed and a new permit initiated after the cause of the automatic termination is resolved.

Examination Outline Cross-reference:	Level	RO	SRO
	Tier #	2	
	Group #	1	
	K/A #	076 K1.01	
	Importance Rating	3.4	

Service Water System: Knowledge of the physical connections and/or cause-effect relationships between the SWS and the following systems: CCW system

Proposed Question: Common 26

Given the following condition:

- Unit 1 Train B Component Cooling Water is being secured and the Component Cooling Water side drained.

Which ONE (1) of the following identifies why Station Service Water flow must be isolated to the Component Cooling Water Heat Exchanger as soon as possible after Component Cooling Water flow is secured?

A. To minimize stagnant conditions in the Component Cooling Water Heat Exchanger which could result in accelerated corrosion.

B. To prevent heat up of the Component Cooling Water Heat Exchanger and possible tube damage.

C. To minimize potential leakage of Station Service Water into the Component Cooling Water Heat Exchanger if a tube leak were to exist.

D. To prevent fouling of the Component Cooling Water Heat Exchanger which could result in restricting Component Cooling Water flow.

Proposed Answer: C

Explanation:

A. Incorrect. Plausible because there is no mechanism to automatically drain the Station Service Water (SSW) side of the heat exchanger, however, the concern is tube leakage.
B. Incorrect. Plausible because the temperature of SSW could change depending upon conditions in the reservoir, however, the concern is tube leakage.
C. Correct. With the Component Cooling Water side depressurized, and SSW at a nominal discharge pressure of 45 psig, securing the CCW Pump could cause leakage to occur to the CCW side if SSW was left in operation.
D. Incorrect. Plausible because fouling could occur, however, the Station Service Water side of the heat exchanger is chemically treated as is the CCW side.

Technical Reference(s) SOP-502A, Step 5.3.2.1 Caution
SOP-502A, Section 3.0, Precautions
SOP-502A, Step 5.1.3.B
SOP-501A, Step 2.1, Prerequisites

Attached w/ Revision # See Comments / Reference

Proposed references to be provided during examination: None

Learning Objective: OP51.SYS.CC1.OB05 **DESCRIBE** the basis for maintaining Component Cooling Water system pressure higher then Station Service Water system pressure.

Question Source: Bank # SYS.SW1.OB02-10
Modified Bank # _____ (Note changes or attach parent)
New _____

Question History: Last NRC Exam _____

Question Cognitive Level: Memory or Fundamental Knowledge X
Comprehension or Analysis _____

10 CFR Part 55 Content: 55.41 10
55.43 _____

Comments / Reference: From SOP-502A, Step 5.3.2.1 Caution	Revision # 18

CPSES SYSTEM OPERATING PROCEDURE MANUAL	UNIT 1 and COMMON	PROCEDURE NO. SOP-502A
COMPONENT COOLING WATER SYSTEM	REVISION NO. 18	PAGE 33 OF 176

5.3.2 Removal / Restoration of Train A Safeguards Loop from Service

These sections describe the steps to isolate Train A Safeguards Loop of CCW, AND to restore the Loop to service.

5.3.2.1 Removal of Train A Safeguards Loop from Service

This section describes the steps to isolate Train A Safeguards Loop of CCW. This section allows the loop to be isolated with the CCW Pump in operation, or with the CCW Pump shutdown.

A. IF Train A CCW Pump is to be stopped, THEN ensure the following equipment has been removed from service OR supplied by Unit 2 where applicable:

☐ • RHR Pump 1-01

☐ • CS Pump 1-01

☐ • CS Pump 1-03

☐ • Safety Chiller 1-05

☐ • UPS A\C X-01

☐ • Control Room A\C Unit X-01

☐ • Control Room A\C Unit X-02

☐ B. IF Train B is to be placed in service, THEN Start Train B CCW Pump per Section 5.2.1.

CAUTION: To prevent Chloride infusion if a tube leak exists, the CCW HX shell side should be filled, vented and pressurized OR the CCW HX should be isolated and drained within 30 minutes of depressurizing the safeguard loop. To meet the intent of this CAUTION, CCW pressure should be greater than SSW pressure to prevent lake water from leaking into CCW.

C. IF the Train A CCW Pump is to be stopped, THEN perform the following:

☐ 1) Stop Train A CCW Pump 1-HS-4518A, CCWP 1, AND place the handswitch in PULL OUT.

☐ 2) Isolate Service Water flow to the Train A CCW Heat Exchanger per SOP-501A, Station Service Water System OR prepare to isolate and drain the CCW shell side of the CCW heat exchanger.

Comments / Reference: From SOP-502A, Section 3.0, Precautions	Revision # 18

CPSES SYSTEM OPERATING PROCEDURE MANUAL	UNIT 1 and COMMON	PROCEDURE NO. SOP-502A
COMPONENT COOLING WATER SYSTEM	REVISION NO. 18	PAGE 7 OF 176

3.0 PRECAUTIONS (continued)

- Demineralized water should be used as the source of makeup to the CCW Surge Tank when filling and venting the CCW System.
- All drainage from the CCW System should be directed to the CCW Drain System or to a sump which pumps directly to LVW.
- The CCW pumps will automatically start from the following signals, if the pump control switches are in AUTO:

  Safety Injection sequence signal

  Blackout sequence signal

  Low CCW pressure at the opposite train CCW heat exchanger outlet

  An AUTO start of the associated train SSW pump on low pressure in the alternate SSW train.
- Starting a CCW pump will automatically start the following equipment, if their control switches are in AUTO:

  Associated CCW pump room fan cooler

  Associated SSW pump

  Associated Safety Chilled Water recirc pump
- Air pockets can form in isolated portions during fill and vent operation. Caution should be exercised when filling the surge tank due to potential for CCW pump surge tank overflow when the CCW pump is stopped and the compressed air pockets expand.
- To prevent Chloride infusion if a tube leak exists, the CCW HX Shell side should be filled, vented and pressurized prior to operating SSW OR the CCW HX shell side should be isolated and drained with the drain valves open.

Comments / Reference: From SOP-502A, Step 5.1.3.B	Revision # 18

CPSES SYSTEM OPERATING PROCEDURE MANUAL	UNIT 1 & COMMON	PROCEDURE NO. SOP-501A
STATION SERVICE WATER SYSTEM	REVISION NO. 16	PAGE 8 OF 74

5.0 INSTRUCTIONS

5.1 Startup

This section describes the steps to startup the Station Service Water System.

☐ 5.1.1 Ensure the train to be started is in Standby per Section 5.3.

5.1.2 Start the desired SSW Pump.

☐ • 1-HS-4250A, SSWP 1

☐ • 1-HS-4251A, SSWP 2

5.1.3 Verify the following have occurred:

A. The associated pump discharge valve opens.

☐ • 1-HS-4286, SSWP 1 DISCH VLV

☐ • 1-HS-4287, SSWP 2 DISCH VLV

B. System pressure (approximately 45 psig) AND flow (approximately 16500 gpm) stabilize.

☐ • 1-PI-4252A, SSWP 1 DISCH PRESS

☐ • 1-FI-4258A, SSWP 1 DISCH FLO

☐ • 1-PI-4253A, SSWP 2 DISCH PRESS

☐ • 1-FI-4259A, SSWP 2 DISCH FLO

Comments / Reference: From SOP-501A, Step 2.1, Prerequisites	Revision # 16

CPSES SYSTEM OPERATING PROCEDURE MANUAL	UNIT 1 & COMMON	PROCEDURE NO. SOP-501A
STATION SERVICE WATER SYSTEM	REVISION NO. 16	PAGE 4 OF 74

1.0 APPLICABILITY

This procedure describes the operations of the Station Service Water System. This procedure applies to Unit 1 operation and Unit Common screenwash operations.

2.0 PREREQUISITES

2.1 Startup

☐ • Notify Chemistry at least one hour prior to start up of Service Water System to provide Biocide injection.

Examination Outline Cross-reference:	Level	RO	SRO
	Tier #	2	
	Group #	1	
	K/A #	078 A3.01	
	Importance Rating	3.1	

Instrument Air System: Ability to monitor automatic operation of the IAS, including: Air pressure

Proposed Question: Common 27

Given the following conditions:

- Instrument Air (IA) Compressor 1-01 is operating as the LEAD compressor.
- IA Compressor 1-02 is in an AUTO-START condition as the BACKUP compressor.
- IA Compressor X-01 is in STANDBY and aligned to Unit 1 through Air Dryer X-01.
- The following sequence of events occur:
  - At 1415, 1-ALB-01-2.4, CNTMT INSTR AIR HDR PRESS LO, alarms as pressure drops to 84 psig.
  - At 1416, 1-ALB-01-3.3, INSTR AIR HDR PRESS LO, alarms as pressure drops to 85 psig.
  - All other Unit 1 Control Room alarms related to the IA System remain clear.
  - At 1420, a stuck-open relief valve on Air Dryer 1-01 reseats.
  - At 1422, both Instrument Air alarms (1-ALB-01-2.4 and 3.3) clear.
  - At 1423, Instrument Air header pressure is 93 psig and slowly rising.

At 1424, assuming NO additional operator actions and with IA Compressor 1-01 running and loaded, which ONE (1) of the following is the status of IA Compressors 1-02 and X-01?

IA Compressor 1-02 is _____ and IA Compressor X-01 is _____.

A. running and loaded; running and loaded

B. running and loaded; shutdown

C. running and unloaded; running and unloaded

D. running and unloaded; shutdown

Proposed Answer: A

Explanation:

A. Correct. Given the conditions listed, the BACKUP and STANDBY IA Compressors will both be running and loaded.

B. Incorrect. Plausible because the BACKUP compressor is running and loaded (See Note for Step 5.2.1.J) given that a low pressure alarms are cleared but header pressure is unknown. The STANDBY compressor would have to see Instrument Air header pressure greater than 95 psig to be shut down See Note for Step 5.4.1.H).

C. Incorrect. Plausible because the BACKUP and STANDBY IA Compressors will be running, however, they will also be loaded.

D. Incorrect. Plausible because the BACKUP IA Compressor will be running, however, it will also be loaded. The STANDBY compressor would have to see Instrument Air header pressure greater than 95 psig to be shut down.

Technical Reference(s): SOP-509A, Step 5.2.1.J Note; ALM-0011A, 1-ALB-01-3.3 Logic Diagram; SOP-509A, Step 5.4.1.H Note — Attached w/ Revision # See Comments / Reference

Proposed references to be provided during examination: None

Learning Objective: OP51.SYS.IA1.OB02 — **STATE** the performance and design attributes of the following Instrument Air System components, flowpaths and features:

- Compressors

Question Source:
Bank # _____
Modified Bank # SYS.IA1.OB08-18 (Note changes or attach parent)
New _____

Question History: Last NRC Exam _____

Question Cognitive Level:
Memory or Fundamental Knowledge _____
Comprehension or Analysis X

10 CFR Part 55 Content:
55.41 7
55.43 _____

Comments / Reference: From SOP-509A, Step 5.2.1.J Note (IAC 1-01/1-02 Ops)	Revision # 21

CPSES SYSTEM OPERATING PROCEDURE MANUAL	UNIT 1	PROCEDURE NO. SOP-509A
INSTRUMENT AIR SYSTEM	REVISION NO. 21	PAGE 13 OF 260

5.2.1

☐ H. Place the UNLOAD/NORMAL Switch on the Instrument Air Compressor 1-01 Panel to UNLOAD.

☐ I. Ensure Open 1CI-0006, INST AIR COMP 1-01 OUT ISOL VLV .

NOTE:
- If an air compressor operates unloaded for approximately 20 minutes, it will automatically shutdown to an Auto-Start condition. The air compressor is in an Auto-Start condition when the Automatic Operation light is ON.
- If an air compressor is in an Auto-Start condition, it will not start until low pressure is sensed (105 psig if in LEAD, 100 psig if in BACKUP). Once low pressure is sensed, the Compressor will start and load.

Comments / Reference: From ALM-0011A, 1-ALB-01-3.3 Logic Diagram	Revision # 8

CPSES ALARM PROCEDURES MANUAL	UNIT 1	PROCEDURE NO. ALM-0011A
ALARM PROCEDURE 1-ALB-1	REVISION NO. 8	PAGE 59 OF 106

ANNUNCIATOR NO.: 3.3

LOGIC:

Comments / Reference: From SOP-509A, Step 5.4.1.H Note (IAC X-01 Ops)	Revision # 21

CPSES SYSTEM OPERATING PROCEDURE MANUAL	UNIT 1	PROCEDURE NO. SOP-509A
INSTRUMENT AIR SYSTEM	REVISION NO. 21	PAGE 23 OF 260

5.4.1 G. Ensure Closed the following valves:

☐ • 2-HS-3476, COMM INST AIR U2 SPLY VLV.

☐ • 1-HS-3476, COMM INST AIR U1 SPLY VLV.

NOTE: IF the function keys or arrow keys are not used for approximately 4 minutes, THEN the display will automatically return to the Main Screen.

H. At the Elektronikon Control Panel, using function keys and arrow keys, scroll to set X-01 Instrument Air Compressor to either LEAD (Press. Band 1) OR STANDBY (Press. Band 2) as follows:

1. IF desired to return to the Mainscreen, THEN perform the following:

☐ a. Depress the F1 function key (beneath << Menu >>).

☐ b. Again, depress the F1 function key (beneath << Menu >>) to return to Menu.

☐ c. Depress the F1 function key (beneath << Mainscreen >>) to return to Mainscreen.

☐ 2. From the Mainscreen, depress the F1 function key (beneath << Menu >>).

NOTE: A hi-lited " ➜" next to each menu item shows what will be selected when depressing the tabulator key

☐ 3. Using the arrow keys located above and below the tabulator key, scroll down to << Modify Parameters >>.

☐ 4. Depress the tabulator key to select << Modify Parameters >>.

☐ 5. Using the arrow keys located above and below the tabulator key, scroll down to << Configuration >>.

☐ 6. Depress the tabulator key to select << Configuration >>.

NOTE:
- IF << Press. Band 1 >> is indicated, THEN the Compressor is in LEAD, and will control pressure between 105 psig and 115 psig.
- IF << Press. Band 2 >> is indicated, THEN the Compressor is in STANDBY, and will control between 95 psig and 115 psig.

Comments / Reference: From SYS.IA1.OB08-18	Revision #

Given the following conditions:

- Instrument Air (IA) Compressor 1-01 is operating as the LEAD compressor.
- IA Compressor 1-02 is in an AUTO-START condition as the BACKUP compressor.
- IA Compressor X-01 is in AUTO and aligned to Unit 1 through Air Dryer X-01.
- The following sequence of events occur:
  - At 1415, 1-ALB-01-2.4, CNTMT INSTR AIR HDR PRESS LO, alarms as pressure drops to 84 psig.
  - At 1416, 1-ALB-01-3.3, INSTR AIR HDR PRESS LO, alarms as pressure drops to 85 psig.
  - All other Unit 1 Control Room alarms related to the IA System remain clear.
  - At 1420, a stuck-open relief valve on Air Dryer 1-01 reseats.
  - At 1422, both Instrument Air alarms (1-ALB-01-2.4 and 3.3) clear.
  - At 1424, both 1-PI-3488, INST AIR AFT FILT OUT PRESS and 1-PI-3490, CNTMT INSTR AIR HDR PRESS are 100 psig.
  - At 1425, Instrument Air header pressure stabilizes at 107 psig.

At 1437, assuming NO additional operator actions and with IA Compressor 1-01 running and loaded, which ONE (1) of the following is the status of IA Compressors 1-02 and X-01?

IA Compressor 1-02 is _____ and IA Compressor X-01 is _____.

A. running and loaded; running and unloaded

B. <u>running and loaded; shutdown</u>

C. running and unloaded; running and unloaded

D. running and unloaded; shutdown

Examination Outline Cross-reference:	Level	RO	SRO
	Tier #	2	
	Group #	1	
	K/A #	103 A2.04	
	Importance Rating	3.5	

Containment System: Ability to (a) predict the impacts of the following malfunctions or operations on the containment system; and (b) based on those predictions, use procedures to correct, control, or mitigate the consequences of those malfunctions or operations: Containment evacuation (including recognition of the alarm)

Proposed Question: Common 28

Given the following conditions with a Refueling in progress:

- ABN-908, Fuel Handling Accident was just entered due to a Containment Air Radiation High alarm.
- The Radiological Emergency Alarm has just been sounded.

Which ONE (1) of the following:

1.) Identifies a Radiological Emergency Alarm when inside Containment?

2.) What action is required per ABN-908, Fuel Handling Accident?

A. 1.) Radiological Emergency Alarm is a “wailing” tone.
   2.) Evacuate all personnel.

B. 1.) Radiological Emergency Alarm is a “steady” tone.
   2.) Evacuate all personnel without appropriate respiratory protection.

C. 1.) Radiological Emergency Alarm is a “wailing” tone.
   2.) Evacuate all personnel without appropriate respiratory protection.

D. 1.) Radiological Emergency Alarm is a “steady” tone.
   2.) Evacuate all personnel.

Proposed Answer: A

Explanation:

A. Correct. This is the correct tone for a Radiological Emergency Alarm. This is the required action per ABN-908.
B. Incorrect. Plausible if thought that this is the Radiological Emergency Alarm, however, this tone is for the Fire Alarm. Evacuating all personnel without appropriate respiratory protection is plausible since this is Containment Air Radiation alarm.
C. Incorrect. Plausible because this is the correct tone, however, all personnel must be evacuated.
D. Incorrect. Plausible because action per ABN-908 is correct, however, it is a wailing tone.

Technical Reference(s) ABN-908, Step 2.3.2
Plant Access Training Material
Attached w/ Revision # See Comments / Reference

Proposed references to be provided during examination: None

Learning Objective: OP51.PRC.XF1.OB03 **STATE** the responsibility of the Unit Reactor Operator, regarding Abnormal Conditions procedures, as stated in ODA-102.

Question Source:
Bank # _____
Modified Bank # _____ (Note changes or attach parent)
New X

Question History: Last NRC Exam _____

Question Cognitive Level:
Memory or Fundamental Knowledge X
Comprehension or Analysis _____

10 CFR Part 55 Content:
55.41 10
55.43 _____

Comments / Reference: From ABN-908, Step 2.3.2	Revision # 4

CPSES ABNORMAL CONDITIONS PROCEDURES MANUAL	UNIT 1 AND 2	PROCEDURE NO. ABN-908
FUEL HANDLING ACCIDENT	REVISION NO. 4	PAGE 4 OF 13

2.3 Operator Actions

ACTION/EXPECTED RESPONSE	RESPONSE NOT OBTAINED

☐ 1 Notify the Shift Manager of the incident and location.

2 Evacuate containment as follows:

☐ a. Announce the containment evacuation over the Gai-tronics.

Example Announcement:

THIS IS NOT A DRILL. ATTENTION ALL PERSONNEL IN Uu CONTAINMENT. EVACUATE CONTAINMENT THROUGH THE PERSONNEL AIRLOCK. ASSEMBLE IN THE HALLWAY OUTSIDE THE PERSONNEL AIRLOCK. THIS IS NOT A DRILL.

☐ b. Sound the Radiological Emergency Alarm.

☐ c. Repeat the announcement.

☐ 3 IF containment rad monitor in alarm, THEN ensure containment ventilation - ISOLATED.

- u-MLB-45A, SI/CNTMT VENT ISOL, Green Windows - LIT (Dampers only)
- u-MLB-45B, SI/CNTMT VENT ISOL, Green Windows - LIT (Dampers only)

☐ 4 Refer to EPP-201.

☐ 5 Place the containment pre-access filter units in operation per SOP-801A/B.

- u-HS-5429, PREACC FILT FAN 11
- u-HS-5432, PREACC FILT FAN 12

☐ 6 Notify Radiation Protection of the incident AND ensure all personnel who were in containment are being surveyed for possible contamination.

NOTE: Containment entry shall require Shift Manager authorization. Security should ensure all personnel have exited containment.

☐ 7 Direct Security to control access to containment.

Comments / Reference: From Plant Access Training Material	Revision # N/A
After identification of an emergency, onsite employees, and visitors will be notified by means of the Plant Wide Alarm System. The Plant Wide Alarm System has three distinct alarm tones and consists of loudspeakers located throughout the plant and permanent structures onsite. The 3 alarm tones + Alarm Notification are as follows: **Fire Alarm.....Steady Tone.** **Radiation Hazard Alarm.....Wailing Tone.** **Site Evacuation Alarm.....Pulse Tone.** **Alarm Notification.....Yelp Tone.**	

Examination Outline Cross-reference:	Level	RO	SRO
	Tier #	2	
	Group #	2	
	K/A #	027 K5.01	
	Importance Rating	3.1	

Containment Iodine Removal System: Knowledge of the operational implications of the following concepts as they apply to the CIRS: Purpose of charcoal filters

Proposed Question: Common 29

Which ONE (1) of the following identifies the purpose of the Charcoal Filters used in the Containment Pre-Access Filtration System?

The Charcoal Filters are used to remove _____ from the Containment atmosphere.

A. aerosols

B. noble gases

C. particulates

D. iodine

Proposed Answer: D

Explanation:

A. Incorrect. Plausible because aerosols are defined as a suspension of solid or liquid particles in a gaseous medium. These would be removed by the HEPA filters installed in the Containment Pre-Access Ventilation System.
B. Incorrect. Plausible because noble gases are released if there are fuel defects present, however, noble gases are not absorbed by the charcoal
C. Incorrect. Plausible because the Containment Pre-Access Filtration System does contain high-efficiency particulate absorber (HEPA) filters which are used to remove particulates, however, the charcoal filters are used to remove Iodine.
D. Correct. Charcoal filters are used to remove +90% of radioactive Iodine from the Containment atmosphere.

Technical Reference(s) SOP-801A, Step 5.5.1
OP51.SYS.CL1.LN, Page 9
Attached w/ Revision # See Comments / Reference

Proposed references to be provided during examination: None

Learning Objective: OP51.SYS.CL1.OB02

STATE the performance and design attributes of the following Containment Ventilation System components, flowpaths and features:

- Containment Pre-Access Filtration System
- Filter Trains (Pre-filters, High Efficiency Particulate Absorbers, Charcoal Absorbers)

Question Source:

Bank # _____

Modified Bank # _____ (Note changes or attach parent)

New X

Question History: Last NRC Exam _____

Question Cognitive Level:

Memory or Fundamental Knowledge X

Comprehension or Analysis _____

10 CFR Part 55 Content:

55.41 9

55.43 _____

Comments / Reference: From SOP-801A, Step 5.5.1	Revision # 13

CPSES SYSTEM OPERATING PROCEDURES MANUAL	UNIT 1	PROCEDURE NO. SOP-801A
CONTAINMENT VENTILATION SYSTEM	REVISION NO. 13	PAGE 31 OF 49

5.5 Containment Pre-Access Filtration System

5.5.1 Containment Pre-Access Filtration System Startup

This section describes the steps to place the Containment Pre-Access Filtration System in service.

☐ A. Ensure the prerequisites in Section 2.5 are met.

☐ B. Refer to the table below for information on the particulate and radioiodine removal rate (in percent of original concentration) with one or both pre-access filtration units in service.

This table predicts the reduction of particulate and radioiodine removal by the CPFS as a function of time. This filtration efficiency was set at 90%, and perfect mixing in containment was assumed. The data below assumes 15,000 cfm from each unit (actual tolerance is 13,500 to 16,500 cfm). Therefore running times may vary 10% from those listed.

% of Original Concentration	1 Unit Running (minutes)	Both Units Running (minutes)
100%	0	0
50%	153	76.5
25%	306	153
10%	509	254
5%	662	331

C. Start both filtration units, AND verify the associated filter inlet and outlet dampers open.

☐ 1-HS-5429, PREACC FILT FN 11

☐ • 1-ZL-5429A, PREACC FILT FN 11 FILT OUT DMPR

☐ • 1-ZL-5429B, PREACC FILT FN 11 FILT IN DMPR

☐ 1-HS-5432, PREACC FILT FN 12

☐ • 1-ZL-5432A, PREACC FILT FN 12 FILT OUT DMPR

☐ • 1-ZL-5432B, PREACC FILT FN 12 FILT IN DMPR

Comments / Reference: From OP51.SYS.CL1.LN, Page 9	Revision # 09/24/99

Containment Pre-access Filtration System

The Containment Pre-access Filtration System is used to reduce the concentration of fission product particulate activity levels in the Containment atmosphere prior to scheduled entry or emergency entry into the Containment. The system consists of two (2) 50% capacity subsystems each rated at 15,000 cfm. Each subsystem consists of an air filtration unit, a supply fan, unit inlet and outlet dampers and ductwork. The filtration units are comprised of a pre-filter, an upstream high efficiency particulate absorber (HEPA), charcoal adsorber, and a downstream HEPA. The filtration unit uses air-operated opposed blade type dampers which open automatically when the train's fan starts. The charcoal adsorber bed is equipped with a strip type thermistor to monitor bed temperature. The filtration units, fans and dampers are located on the 832’ elevation of Containment.

Examination Outline Cross-reference:

Level	RO	SRO
Tier #	2	
Group #	2	
K/A #	055 K1.06	
Importance Rating	2.6	

Condenser Air Removal: Knowledge of the physical connections and/or cause-effect relationships between the CARS and the following systems: PRM system

Proposed Question: Common 30

Given the following conditions on Unit 1:

- A small Steam Generator tube leak is in progress.
- 1-RE-2959 (COG-182), CONDENSER OFF GAS Radiation Monitor is rising.
- One (1) Condenser Exhausting Vacuum Pump is in service.

Which ONE (1) of the following describes the effect on Condenser vacuum?

Condenser vacuum should _____ due to an increase in _____.

A. lower; non-condensable gases

B. rise; condensable gases

C. lower; condensable gases

D. rise; non-condensable gases

Proposed Answer: A

Explanation:

A. Correct. Condenser vacuum should rise due to an increase in non-condensable gases brought on by the Steam Generator tube leak.
B. Incorrect. Plausible because absolute pressure will rise but vacuum will lower because dissolved gases leaking from the Reactor Coolant System are non-condensable gases.
C. Incorrect. Plausible because vacuum will lower, however, it is the presence of non-condensable gases that causes vacuum to lower. Condensable gases, such as steam, act to improve vacuum.
D. Incorrect. Plausible because it is the presence of non-condensable gases that causes Condenser pressure to change, however, absolute pressure will rise but vacuum will lower.

Technical Reference(s) OP51.SYS.CV1.LN, Page 11 & 15 Attached w/ Revision # See Comments / Reference

Proposed references to be provided during examination: None

Learning Objective: OP51.SYS.CV1.OB11

STATE the physical connections and **EVALUATE** the cause-effect relationships between the Condenser Vacuum and Water Box Priming System and the following systems, components or events:

- Main Turbine

Question Source:
Bank # _____
Modified Bank # _____ (Note changes or attach parent)
New X

Question History: Last NRC Exam _____

Question Cognitive Level:
Memory or Fundamental Knowledge _____
Comprehension or Analysis X

10 CFR Part 55 Content:
55.41 5
55.43 _____

Comments / Reference: From OP51.SYS.CV1.LN, Page 11	Revision # 08/05/99

CONDENSER VACUUM SYSTEM (CV)

Provide initial evacuation of main condenser shells and auxiliary condenser shells (steamside) during startup by removing air and non-condensable gases. (Hogging Mode)

Provide for removal of non-condensable gases from steam side of main and auxiliary condensers during operation. (Holding Mode)

Provide a vacuum breaker arrangement for the Main and Auxiliary Condenser shells.

Prevent an unmonitored release of radioactive material to the environment through the use of the Radiation Monitoring System.

Comments / Reference: From OP51.SYS.CV1.LN, Page 15	Revision # 08/05/99

Condenser Vacuum System Flow Path (Fig. 2)

Air and non-condensable gases are drawn from the main condenser shell thru the 8-inch piping and individual isolation valves to common isolation valve u-CV-0020. Air and non-condensable gases are drawn from the auxiliary condenser shells thru the 8-inch piping and individual isolation valves to common isolation valve u-CV-0022. These lines join to form the suction of the CEV pumps. Each pump discharges through its own seal water tank (Separator) and silencer to a common, 10" discharge header .Air and non-condensable gases in the discharge header are monitored for radiation by the condenser off-gas radiation monitor (u-RE-2959), located in a bypass line, and then discharged (in the Aux Building) to the Primary Plant Ventilation System.

Examination Outline Cross-reference:	Level	RO	SRO
	Tier #	2	
	Group #	2	
	K/A #	068 K4.01	
	Importance Rating	3.4	

Liquid Radwaste System: Knowledge of design features and/or interlocks that provide for the following: Safety and environmental precautions for handling hot, acidic and radioactive liquids

Proposed Question: Common 31

Given the following conditions:

- Waste Monitor Tank #1 is being released to the Unit 1 Circulating Water System.
- A PC-11 OPERATE FAILURE- MONITOR LOSS OF SAMPLE FLOW alarm for X-RE-5253, Liquid Waste Processing System Discharge Radiation Monitor is received.
- X-RV-5253, Liquid Waste Processing System Discharge Isolation Valve closed terminating the release.

Which ONE (1) of the following caused the alarm and closure of X-RV-5253, Liquid Waste Processing System Discharge Isolation Valve?

A. PC-11, POLL STATUS-MONITOR OFF LINE with X-RE-5253, Liquid Waste Processing System Discharge Radiation Monitor.

B. Loss of air to the Waste Monitor Tank Level indication causing an indicated high level condition.

C. PC-11, EQUIPMENT FAILURE-MONITOR LOSS OF FLOW CONTROL on X-RE-5253, Liquid Waste Processing System Discharge Radiation Monitor.

D. Loss of air to the Waste Monitor Tank level indication causing an indicated low level condition.

Proposed Answer: D

Explanation:

A. Incorrect. Plausible because it is an associated alarm that requires knowledge that the PC-11 is not required for monitor OPERABILITY and POLL STATUS-MONITOR OFF LINE failures do not cause an OPERATE FAILURE alarm.

B. Incorrect. Plausible because the operator would be required to have knowledge of the failure mode of the level instrument.

C. Incorrect. Plausible because it is an associated alarm that requires knowledge that the PC-11 is not required for monitor OPERABILITY and EQUIPMENT FAILURE-MONITOR LOSS OF FLOW CONTROL failures do not cause an OPERATE FAILURE alarm.

D. Correct. Loss of air to the Waste Monitor Tank level instrument results in an indicated low level causing the associated pump to trip which causes low sample and process flow. This causes an OPERATE FAILURE alarm on the PC-11 for X-RE-5253, which causes closure of X-RV-5253.

Technical Reference(s) ALM-3200, Pages 7, 24 & 63
OP51.SYS.WP1.LN, Pages 36, 37 & 47
Attached w/ Revision # See Comments / Reference

Proposed references to be provided during examination: None

Learning Objective: OP51.SYS.RM1.OB07 **LIST** and **EXPLAIN** the Digital Radiation Monitoring System design features which provide for the trips, permissives, and interlocks associated with the following monitors:

- Liquid Waste to Circulating Water

OP51.SYS.WP1.OB02 **STATE** the functions, operation and interlocks of the following Liquid Waste Processing System components:

- Waste Monitor Tanks 1 & 2 and associated equipment

Question Source:
Bank # _____
Modified Bank # _____ (Note changes or attach parent)
New X

Question History: Last NRC Exam _____

Question Cognitive Level:
Memory or Fundamental Knowledge _____
Comprehension or Analysis X

10 CFR Part 55 Content:
55.41 11, 12
55.43 _____

Comments / Reference: From ALM-3200, Page 24	Revision # 4

CPSES CPSES ALARM PROCEDURES MANUAL	UNIT COMMON	PROCEDURE NO. ALM-3200
ALARM PROCEDURE DRMS	REVISION NO. 4	PAGE 24 OF 117

ALARM: **OPERATE FAILURE-MONITOR LOSS OF SAMPLE FLOW** COLOR: BLUE

AFFECTED MONITORS:

- FFLu60 (u-RE-406)
- TBDu72 (u-RE-5100)
- CAGu97 (u-RE-5503)
- CAIu99 (u-RE-5566)
- CAPu98 (u-RE-5502)
- CCWu67 (u-RE-4509)
- CCWu68 (u-RE-4510)
- CCWu69 (u-RE-4511)
- COGu82 (u-RE-2959)
- CRV053 (X-RE-5895A)
- CRV054 (X-RE-5895B)
- CRV091 (X-RE-5896A)
- CRV092 (X-RE-5896B)
- PVG484 (X-RE-5570A)
- PVG485 (X-RE-5570B)
- PVG584 (X-RE-5570A)
- PVG585 (X-RE-5570B)
- SSWu65 (u-RE-4269)
- PVF684 (X-RE-5570A)
- PVF685 (X-RE-5570B)
- PVG084 (X-RE-5570A)
- PVG085 (X-RE-5570B)
- PVG384 (X-RE-5567A)
- PVG385 (X-RE-5567B)
- LWE076 (X-RE-5253)
- SGSu64 (u-RE-4200)
- SSWu66 (u-RE-4270)

PROBABLE CAUSES

CAUTION: Depressing the PUMP ON/OFF pushbutton when it is illuminated at the PC-11 or RM-23 consoles will turn off the sample pump on monitors which are equipped with sample pumps.

Loss of power to the sample pump or the RM-80 associated with the sample pump
Loss of process flow to monitors without sample pumps
Sample pump control switch at the process skid in the OFF position
Sample pump turned off at the PC-11 or RM-23 console
Stuck or clogged process or flow transmitter/switch
High temperature or high flow condition at the process skid causing a sample pump trip (liquid)
Clogged sampling filters restricting sample flow
Maintenance switch in BLOCK

MONITOR RESPONSE:

Automatic actions for monitors which actuate due to an OPERATE FAILURE will be initiated

OPERATOR ACTION:

1. Determine the affected monitor.

NOTE: When securing a SSW Pump, loss of process flow to the Station Service Water Discharge Radiation Monitors will initiate a PC-11 OPERATE FAILURE-MONITOR LOSS OF SAMPLE FLOW (Blue OPERATE status) AND EQUIPMENT FAILURE-MONITOR LOSS OF PROCESS FLOW alarm (Light Blue OPERATE status).

A. IF u-RE-4269 or u-RE-4270 is affected AND a SSW pump is in service providing process flow to the affected monitor, THEN ensure Chemistry is notified to initiate sampling in accordance with CHM 112 as required.

Comments / Reference: From ALM-3200, Page 7	Revision # 4

CPSES CPSES ALARM PROCEDURES MANUAL	UNIT COMMON	PROCEDURE NO. ALM-3200
ALARM PROCEDURE DRMS	REVISION NO. 4	PAGE 7 OF 117

ALARM DESCRIPTION: **PC-11 POLL STATUS-MONITOR OFF-LINE**

With the monitor in an off-line status, the top display VALUE for current radiation level is not accurate or updated. The TREND data will remain accurate. Sample and process flow, as applicable, is still polled and displayed at the PC-11 console. For monitors with an associated RM-23, data may still be obtained from the RM-23. No alarm status change will be displayed or annunciated at the PC-11 console for any monitor in the off-line condition. Monitors which provide automatic actuation on HIGH radiation or loss of OPERATE status will still function WITHOUT causing the PC-11 console alarm.

Comments / Reference: From ALM-3200, Page 63	Revision # 4

CPSES CPSES ALARM PROCEDURES MANUAL	UNIT COMMON	PROCEDURE NO. ALM-3200
ALARM PROCEDURE DRMS	REVISION NO. 4	PAGE 63 OF 117

ALARM DESCRIPTION: **EQUIPMENT FAILURE-MONITOR**
LOSS OF FLOW CONTROL

The CRAC monitors CRV054 and CRV091 are normally in spec form control, selected by Monitor Item 042 SAMPLE FLOW CONTROL OPT, which allows the flow control valve to maintain sample flow at the value in Monitor Item 16 SAMPLE FLOW RATE 1-SETPOINT. Should the flow control valve fail to maintain the sample flow at the value specified plus or minus the deadband specified in Monitor Item 017 SAMPLE FLOW RATE CONTROL DEADBAND for greater than five minutes, the alarm is initiated.

The WRGM monitors are normally in spec form control. This control mode is identical to the isokinetic control mode except the setpoint is provided by the operator (Monitor Item 016 SAMPLE FLOW RATE 1 - SETPOINT) rather than being derived from the duct flow transducer. If setpoint control cannot be established within plus or minus the deadband in Monitor Item 017 SAMPLE FLOW RATE DEADBAND in the 2 ½ minute time allocation, the "loss of flow control" alarm is initiated. The system will continue to attempt to maintain setpoint control.

Comments / Reference: From OP51.SYS.WP1.LN, Pages 36 & 37	Revision # 05/12/03

LWPS DISCHARGE RADIATION MONITOR X-RE-5253

X-RE-5253 provides radiation process monitoring of liquids leaving the LWPS going to either unit's Circ Water System. It has an adjustable alarm setpoint that will close downstream isolation valve X-RV-5253 when the setpoint is reached to stop the discharge. In addition, the radiation element feeds a RM-80 microprocessor that transmits data to the PC-11 radiation-monitoring terminal in the control room.

In order for X-RE-5253 to operate it must have a minimum amount of sample flow. By throttling XWP-0119, a differential pressure is created between the inlet and outlet sample connections. This differential pressure causes sample flow to be directed through the rad monitor.

To initiate a discharge, XWP-0119 is first throttled open approximately 2 turns. Then the discharge valve, X-RV-5253 is opened. The operator then verifies proper sample flow and adjusts XWP-0119 as needed to obtain proper flow.

LWPS DISCHARGE ISOLATION VALVE X-RV-5253

X-RV-5253 is an air operated diaphragm valve which is operated from the LPP with a 3-position key operated switch which spring returns to "AUTO" from the "OPEN" position. The valve fails closed on a loss of instrument air.

X-HS-5253, Liquid Waste Processing Effluent Handswitch, is a 3-position key operated switch which spring returns to "AUTO" from the "OPEN" position. When opening this valve, hold the switch in the "open" position for 10 seconds before letting it spring return to "Auto" to keep the valve from closing erroneously. This allows time for sample flow to be established.

In the "OPEN" position, the solenoid is energized allowing air to pass to the diaphragm opening the valve. When the handswitch is released from the "OPEN" position, the valve will close if the following are not met (See Figure 10):

- 2 of 4 Circulating Water Pumps operating in either Unit;
- No high radiation alarm on Radiation Monitor Channel 5253; and
- Radiation Monitor Channel 5253 operating without:

1. A circuit failure
2. Loss of counts
3. Channel out of service; or
4. Loss of Sample Flow

The channel also provides for a "HI RAD" alarm on the annunciator panel on the Liquid Waste Processing Panel. This alarm will be generated if any of the following occur:

- Hi Radiation on X-RE-5253
- A circuit failure
- Loss of counts
- Channel out of service; or
- Loss of Sample Flow

Comments / Reference: From OP51.SYS.WP1.LN, Page 47	Revision # 05/12/03

LOSS OF INSTRUMENT AIR

Level sensors contain a bellows that senses the differential pressure due the changes in level. These variations are hydraulically transmitted to a differential pressure unit that uses instrument air to send a signal to the level switches associated with the indication, alarms, and trip functions.

On a loss of Instrument Air, level indication for the following tanks will go to minimum, the LO level alarm will actuate and the associated pump will trip:

Waste Holdup Tank

Waste Evaporator Condensate Tank

Floor Drain Tanks #1, #2, and #3

Waste Monitor Tanks

Laundry Holdup and Monitor Tanks

Chemical Drain Tank

Examination Outline Cross-reference:	Level	RO	SRO
	Tier #	2	
	Group #	2	
	K/A #	041 A1.01	
	Importance Rating	2.9	

Steam Dump/Turbine Bypass Control System: Ability to predict and/or monitor changes in parameters (to prevent exceeding design limits) associated with operating the SDS controls including: Tave, verification above low/low setpoint

Proposed Question: Common 32

Given the following conditions:

- Steam Dump System Valves have remained open post-trip due to a T_{ave} instrument failure high.
- The other three (3) T_{ave} Channels are indicating 549°F and lowering.

Which ONE (1) of the following actions would result in closure of the Steam Dump System Valves?

Place...

A. the Steam Dump Mode Selector Switch in the STEAM PRESSURE position.

B. the Steam Dump Mode Selector Switch in the RESET position.

C. either Steam Dump Interlock Select Switch in BYPASS INTERLOCK position.

D. both Steam Dump Interlock Select Switches in BYPASS INTERLOCK position.

Proposed Answer: A

Explanation:

A. Correct. In the STEAM PRESSURE position the T_{ave} signal is not the controlling signal.
B. Incorrect. Plausible because one might not realize that the switch doesn't remove the T_{ave} signal in that position and it spring returns to the T_{ave} position.
C. Incorrect. Plausible because selecting either to OFF on the Steam Dump Interlock Select Switch would cause valve closure, however, selecting BYPASS INTERLOCK allows valves to open to perform a cooldown without interference from the low-low T_{ave} block signal.
D. Incorrect. Plausible because selecting both to OFF on the Steam Dump Interlock Select Switch would cause valve closure, however, selecting BYPASS INTERLOCK allows valves to open to perform a cooldown without interference from the low-low T_{ave} block signal.

Technical Reference(s) OP51.SYS.SD1.LN, Pages 13 & 14 Attached w/ Revision # See Comments / Reference

Proposed references to be provided during examination: None

Learning Objective: OP51.SYS.SD1.OB02

STATE the performance and design attributes of the following Steam Dump System components, flowpaths and features:

- Mode Selector Switch
- Interlock Selector Switch

Question Source:
Bank # _____
Modified Bank # _____ (Note changes or attach parent)
New X

Question History: Last NRC Exam _____

Question Cognitive Level:
Memory or Fundamental Knowledge _____
Comprehension or Analysis X

10 CFR Part 55 Content:
55.41 4, 7
55.43 _____

Comments / Reference: From OP51.SYS.SD1.LN, Page 13	Revision # 10/16/02

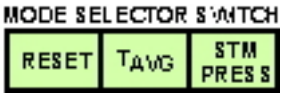

STEAM DUMP MODE SELECTOR SWITCH

The Steam Dump Mode Selector Switch is located on CB-08. The switch has three positions. The Tave and Steam Pressure positions are maintained positions. The Reset position will spring return to the center position (Tave) when released by the operator. The Reset position has only one function and that is to reset the C-7 signal. The Tave position removes the Steam Pressure controller from the control circuit and places either the Load Rejection controller or the Plant Trip controller into service. This enables the steam dumps to operate on either a load rejection or plant trip. The Steam Pressure position removes the Load Rejection and Plant Trip controllers from the control circuit and places the Steam Pressure controller into the control circuit.

Comments / Reference: From OP51.SYS.SD1.LN, Pages 13 & 14	Revision # 10/16/02

STEAM DUMP INTERLOCK SELECT SWITCHES

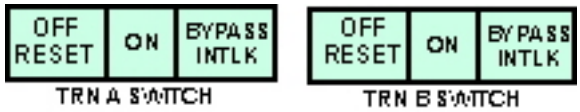

The Steam Dump Interlock Select Switches are located on CB-08. Each switch has three positions (OFF/RESET, ON, BYPASS INTERLOCK). The OFF/RESET position sends a signal to the protection grade solenoid for its respective train to cause the solenoid to block air flow to the valve actuator and vent air line between the solenoid and the valve actuator. This action will cause the Steam Dump Valve to close. The ON position sends a signal to the protection grade solenoid for its respective train to cause the solenoid to energize and allow air flow past the solenoid. The solenoid will energize as long as Reactor Coolant Temperature is above 553°F.

The BYPASS INTERLOCK position allows the removal of the Lo-Lo Tave block signal to the three Steam Dump Valves known as the Cooldown Valves. The Cooldown Valves are the Bank 1 Valves.

Allowing the re-opening of these valves allows the operator to cooldown the unit to a condition where the Residual Heat Removal System may be placed in service to cooldown the unit to Cold Shutdown Conditions.

Examination Outline Cross-reference:

Level	RO	SRO
Tier #	2	
Group #	2	
K/A #	002 K1.05	
Importance Rating	3.2	

Reactor Coolant System: Knowledge of the physical connections and/or cause-effect relationships between the RCS and the following systems: PRT

Proposed Question: Common 33

While operating at 100% equilibrium power, the Pressurizer Relief Tank (PRT) pressure, temperature, and level are slowly rising.

Which ONE (1) of the following identifies a likely source of inflow to the Pressurizer Relief Tank?

A. Reactor Coolant Pump Number 2 seal leakoff.

B. Reactor Vessel Head O-ring leakoff.

C. 1-8117, U1 LTDN ORIF DNSTRM RLF VLV.

D. 1-HV-3609, PRZR VENT VLV.

Proposed Answer: C

Explanation:

A. Incorrect. Plausible because the Reactor Coolant Pump #1 Seal Return line has a relief valve that discharges to the Pressurizer Relief Tank (PRT), however, #2 seal leakoff flow goes to the RCDT.
B. Incorrect. Plausible because vessel head leak off flow is directed to a tank within Containment, however, it is the Reactor Coolant Drain Tank (RCDT).
C. Correct. The Chemical and Volume Control System Letdown Relief Line Valve goes to the Pressurizer Relief Tank.
D. Incorrect. Plausible because one might assume that the Pressurizer Vent Valve went to the PRT, however, it goes to the Containment atmosphere.

Technical Reference(s) OP51.SYS.RC1.LN, Figure 17
OP51.SYS.RC1.LN, Figure 14
PO51.SYS.RC1.LN, Page 15

Attached w/ Revision # See Comments / Reference

Proposed references to be provided during examination: None

Learning Objective: OP51.SYS.RC1.OB02

STATE the function and operation of the following Reactor Coolant System components, flowpaths and features:

- Reactor Coolant Pumps
- Seal package
- Pressurizer Relief Tank

Question Source:

Bank # SYS.RC1.OB19-11

Modified Bank # _____ (Note changes or attach parent)

New _____

Question History: Last NRC Exam _____

Question Cognitive Level:

Memory or Fundamental Knowledge X

Comprehension or Analysis _____

10 CFR Part 55 Content:

55.41 3

55.43 _____

Comments / Reference: From OP51.SYS.RC1.LN, Figure 17	Revision # 12/12/05

OP51.SYS.RC1

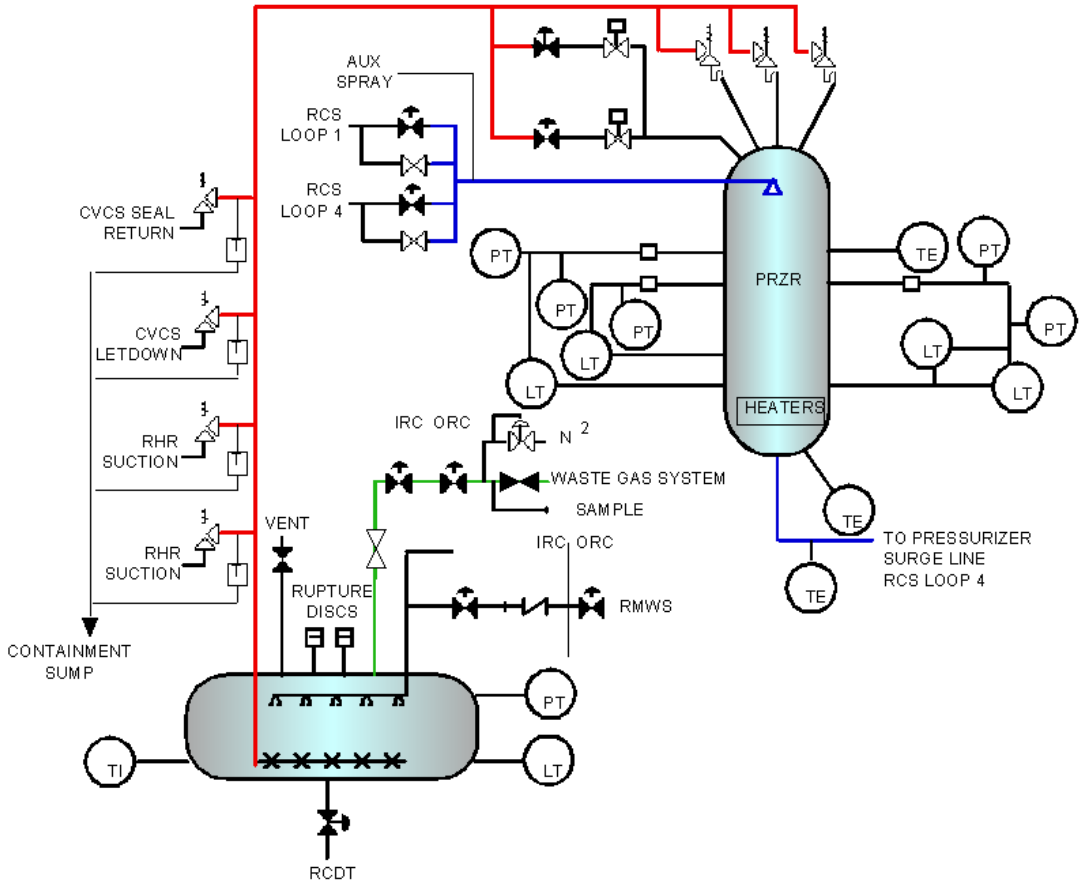

PRESSURIZER AND RELIEF TANK

FIGURE 17

Rev. 0

Comments / Reference: From OP51.SYS.RC1.LN, Figure 14	Revision # 12/12/05

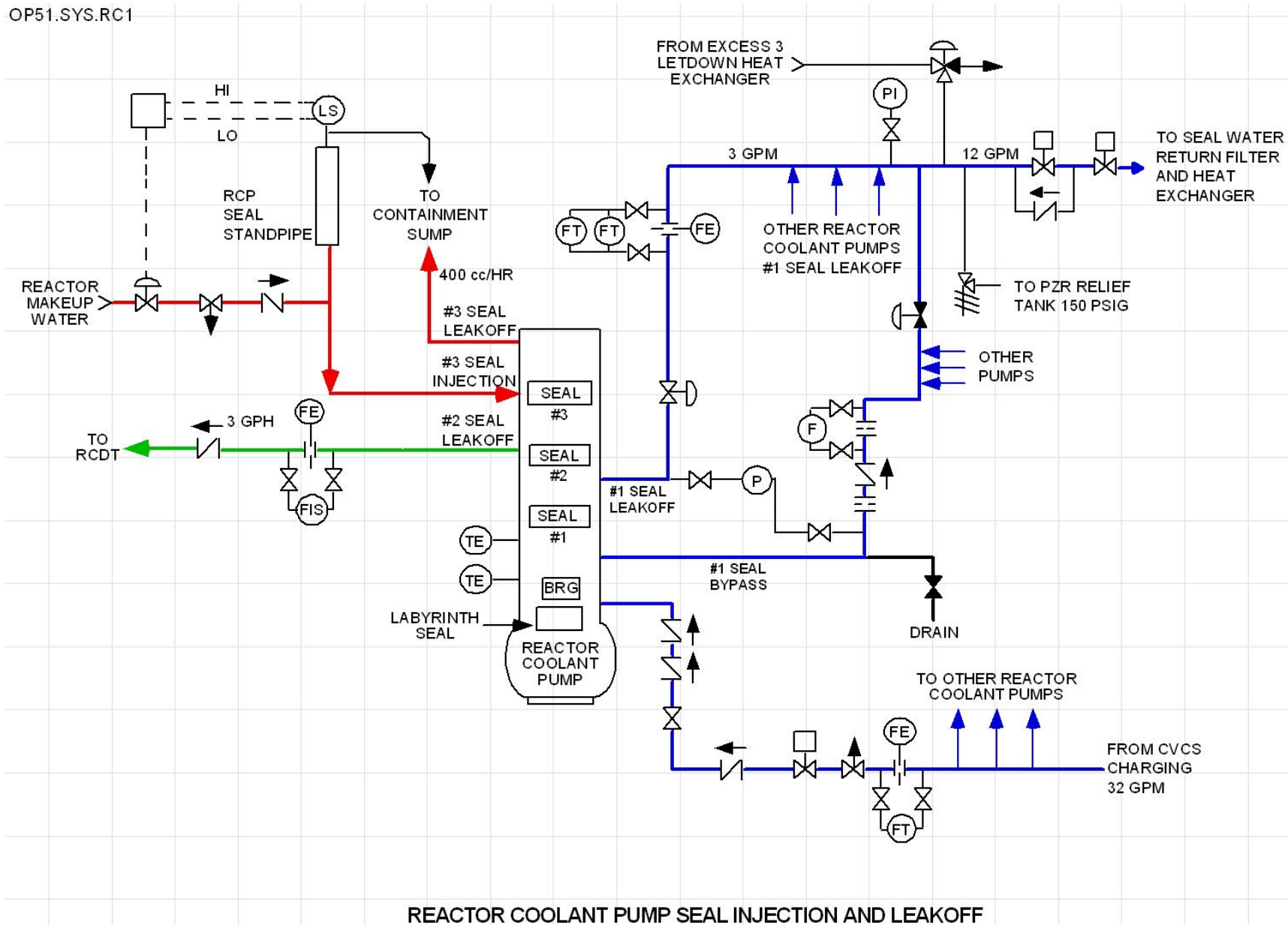

REACTOR COOLANT PUMP SEAL INJECTION AND LEAKOFF
FIGURE 14

Comments / Reference: From PO51.SYS.RC1.LN, Page 15	Revision # 08/0/05
The primary coolant is contained between the vessel flange and the upper head by two self-energizing O-ring gaskets. The O-rings are a silver plated Ni-Cr-Fe alloy. Two gasket grooves are machined in the closure head flange to hold the O-rings. The space between the two O-rings and the space outside of the outer O-ring is tapped and piped to a drain. Each pipe contains a manual isolation valve (uRC-8069A, B) to allow for isolation in case of leakage from the respective O-ring. Normally the outer O-ring isolation valve (uRC-8069A) is shut and the inner O-ring isolation valve (uRC-8069B) is open. The parallel drain lines combine to form a common drain that discharges into the reactor coolant drain tank. A remotely operated isolation valve (u-8032) and a temperature indicator are provided on this line **(Figure 3)**.	

Examination Outline Cross-reference:	Level	RO	SRO
	Tier #	2	
	Group #	2	
	K/A #	014 K3.02	
	Importance Rating	2.5	

Rod Position Indication System: Knowledge of the effect that a loss or malfunction of the RPIS will have on the following: Plant computer

Proposed Question: Common 34

Given the following condition:

- ABN-712, Rod Control System Malfunction, Section 4.0, Digital Rod Position Malfunction has the operator check redundant indications to demonstrate that all rods are aligned when there is a loss of Rod Position Indication.

Which ONE (1) of the following is one of the redundant indications that would demonstrate rod alignment specified in ABN-712, Rod Control System Malfunction?

A. Turbine Load from before the loss of indication compared with current Turbine Load is approximately the same.

B. Check previous Plant Computer thermocouple map and current thermocouple map approximately equal.

C. Loop Hot Leg temperatures are approximately the same as they were before the loss of indication.

D. Loop Cold Leg temperatures are approximately the same as they were before the loss of indication.

Proposed Answer: B

Explanation:

A. Incorrect. Plausible because Turbine load can affect rod position, however, information is not specified in ABN-712.
B. Correct. Per ABN-712, observation of Plant Computer thermocouple maps which indicate approximately equal temperatures is an acceptable method to determine that all rods are aligned.
C. Incorrect. Plausible because Rod movement near the Hot Legs could affect Hot Leg temperature but would not be recognizable unless the inserted rod was near the Hot Leg. Information is not specified in ABN-712.
D. Incorrect. Plausible because Rod movement near the Hot Legs could affect Hot Leg temperature which in turn could affect Cold Leg temperatures but is incorrect for same reason as above. Information is not specified in ABN-712.

Technical Reference(s) ABN-712, Step 4.3.6 Attached w/ Revision # See Comments / Reference

Proposed references to be provided during examination: None

Learning Objective: OP51.SYS.RI1.OB17

ANALYZE the indications and **DESCRIBE** the mitigation strategy and major steps taken relative to the Control Rod Position Monitoring System, both initial and subsequent, for:

- ABN-712, Rod Control System Malfunction

Question Source:

Bank #		
Modified Bank #		(Note changes or attach parent)
New	X	

Question History: Last NRC Exam

Question Cognitive Level:

Memory or Fundamental Knowledge	
Comprehension or Analysis	X

10 CFR Part 55 Content:

55.41 7, 10

55.43

Comments / Reference: From ABN-712, Step 4.3.6	Revision # 10

CPSES ABNORMAL CONDITIONS PROCEDURES MANUAL	UNIT 1 AND 2	PROCEDURE NO. ABN-712
ROD CONTROL SYSTEM MALFUNCTION	REVISION NO. 10	PAGE 26 OF 52

4.3 Operator Actions

ACTION/EXPECTED RESPONSE	RESPONSE NOT OBTAINED
☐ 6 Check Redundant Indication Demonstrates ALL Rods - ALIGNED ● Check all Power Range NIs indicating approximately equal power. ● Check previous Plant Computer thermocouple map and current thermocouple map approximately equal. (Refer to Attachment 3)	Perform the following: a. Perform OPT-302 to ensure QPTR within limits. b. IF abnormal control rod response is indicated, THEN GO TO Section 2.0, this procedure. c. IF misaligned rod(s) indicated by Power Range NIs, THEN GO TO Section 3.0, this procedure.

Examination Outline Cross-reference:

Level	RO	SRO
Tier #	2	
Group #	2	
K/A #	086 K6.04	
Importance Rating	2.6	

Fire Protection System: Knowledge of the effect of a loss or malfunction on the Fire Protection System will have on the: Fire, smoke, and heat detectors

Proposed Question: Common 35

Given the following conditions:

- The Main Fire Detection Board Trouble Array Panel has just gone into alarm.
- An investigation reveals the following area is affected:

Sensitive Information

Which ONE (1) of the following identifies the type of detector affected given this Fire Protection System malfunction?

A. Ionization detector.

B. Thermal detector.

C. Strip thermal detector.

D. UV flame detector.

Proposed Answer: A

Explanation:

A. Correct. A black diamond is the symbol used to signify an ionization detector.
B. Incorrect. Plausible because thermal detectors are used at CPNPP, however, the symbol used is a circle with a black dot inside.
C. Incorrect. Plausible because strip thermal detectors are used at CPNPP, however, the symbol used is a thick straight black line.
D. Incorrect. Plausible because UV flame detectors are used at CPNPP, however, the symbol used is a black triangle.

Technical Reference(s) ABN-901, Attachment 1, Page 2 of 2 Attached w/ Revision # See Comments / Reference

Proposed references to be provided during examination: None

Learning Objective: OP51.SYS.FP1.OB03 **STATE** the functions, operation and interlocks of the following Fire Detection components:

- Fire Detection Main Control Panel

Question Source: Bank # ____ Modified Bank # ____ (Note changes or attach parent) New X

Question History: Last NRC Exam ____

Question Cognitive Level: Memory or Fundamental Knowledge X Comprehension or Analysis ____

10 CFR Part 55 Content: 55.41 10 55.43 ____

Comments / Reference: From ABN-901, Attachment 1, Page 2 of 2	Revision # 8

CPNPP ABNORMAL CONDITIONS PROCEDURES MANUAL	UNIT COMMON	PROCEDURE NO. ABN-901
FIRE PROTECTION SYSTEM ALARMS OR MALFUNCTIONS	REVISION NO. 8	PAGE 13 OF 75

ATTACHMENT 1
PAGE 2 OF 2

MAIN FIRE DETECTION BOARD JOB AID NOTES

The following identifies symbols that appear on various Main Fire Detection Board alarm windows

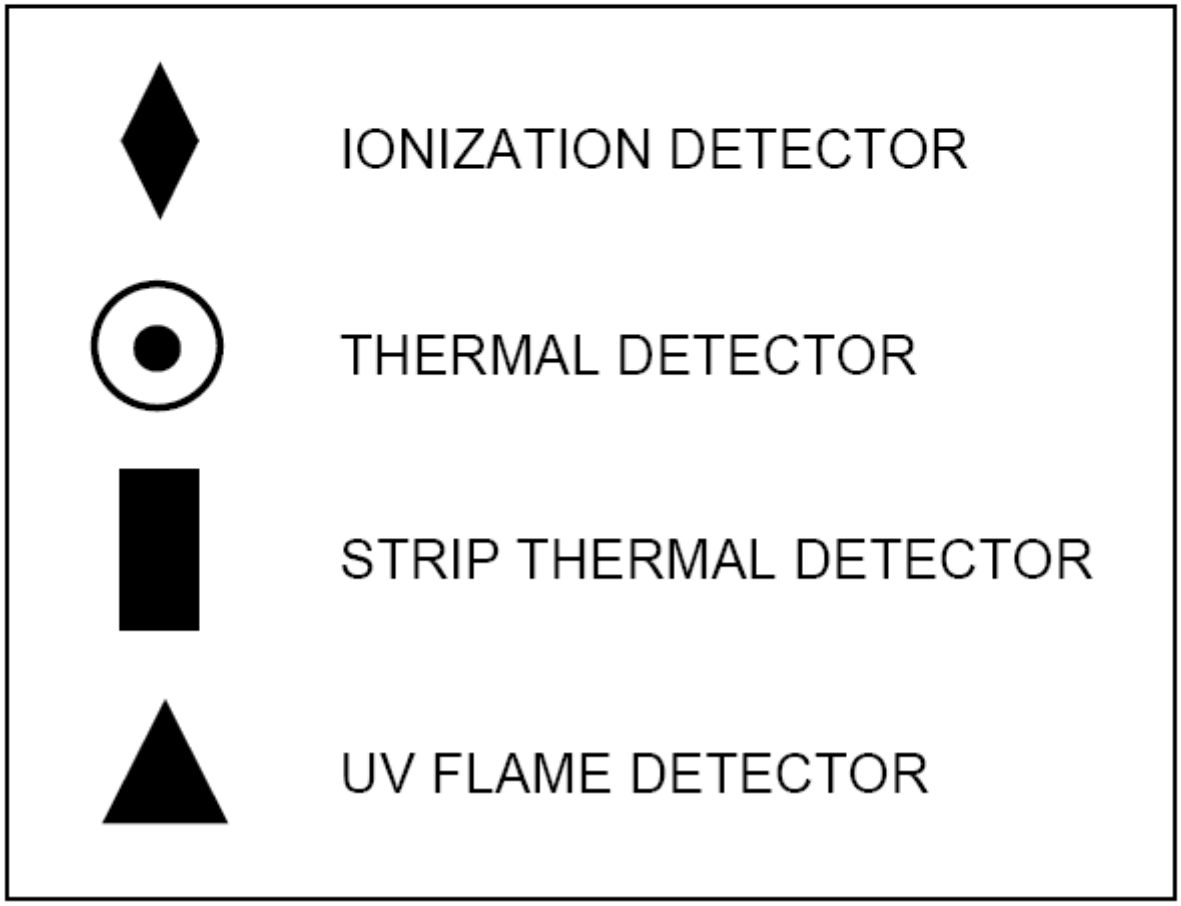

Examination Outline Cross-reference:

Level	RO	SRO
Tier #	2	
Group #	2	
K/A #	001 A2.04	
Importance Rating	3.2	

Control Rod Drive System: Ability to (a) predict the impacts of the following malfunctions or operations on the CRDS; and (b) based on those predictions, use procedures to correct, control, or mitigate the consequences of those malfunctions or operations: Positioning of axial shaping rods and their effect on SDM

Proposed Question: Common 36

Given the following condition with Unit 1 at 100%:

- A trip of Main Feedwater Pump 1-01 causes a Turbine Runback.
- Annunciator 1-ALB-6D, Window 2.7, ANY CONTROL ROD BANK AT LO-LO LMT is lit.
- Control Bank D rods are inserted to 55 steps.

Which ONE (1) of the following describes the most immediate concern and what is the proper action to mitigate the situation?

A. 1.) Axial Flux Difference has been driven too low in the core.
   2.) Withdraw Control Bank D as Axial Flux Difference allows.

B. 1.) Control Bank D overlap with Control Bank C is greater than 115 steps tip to tip.
   2.) Insert Control Bank C to establish overlap of 115 steps tip to tip.

C. 1.) The reactivity worth of a stuck rod in one of the fully withdrawn groups has exceeded COLR limits.
   2.) Withdraw Control Rod Bank D

D. 1.) Available SHUTDOWN MARGIN may be inadequate.
   2.) Verify adequate SHUTDOWN MARGIN within one hour.

Proposed Answer: D

Explanation:

A. Incorrect. Plausible because insertion of Control Bank D will drive AFD lower in the core but SHUTDOWN MARGIN is the major concern.
B. Incorrect. Plausible because Rod Bank Overlap is an issue when withdrawing or inserting rods but in this case the overlap is still less than 115 steps and insertion of Control Bank C would cause a further reduction in SHUTDOWN MARGIN.
C. Incorrect. Plausible because Rod Insertion Limits are also to minimize worth of an ejected rod, however, not for a stuck rod.
D. Correct. Because Control Rod Insertion Limits have been violated available SHUTDOWN MARGIN may be inadequate. SHUTDOWN MARGIN must be verified within one hour.

Technical Reference(s) OP51.SYS.CR1.LN, Pages 71 & 72
CPSES Unit 1, Cycle 14, COLR Figure 2
ALM-0064A, 1-ALB-6D-2.7

Attached w/ Revision # See Comments / Reference

Proposed references to be provided during examination: None

Learning Objective: OP51.SYS.CR1.OB16

LIST and **DESCRIBE** the following Technical Specifications (i.e. LCOs, action statements and conditional surveillance requirements of one hour and less, if applicable) for the Rod Control System:

- 3.1.6, Control Bank Insertion Limits

OP51.SYS.MT1.OB26

STATE the Turbine Runback inputs, setpoints, and rates and **EXPLAIN** the logic and reason for each.

Question Source:

Bank #		
Modified Bank #		(Note changes or attach parent)
New	X	

Question History: Last NRC Exam

Question Cognitive Level:

Memory or Fundamental Knowledge	
Comprehension or Analysis	X

10 CFR Part 55 Content: 55.41 10
55.43

Comments / Reference: From OP51.SYS.CR1.LN, Pages 71 & 72	Revision # 07/30/07

3.1.6, CONTROL BANK INSERTION LIMITS

Control banks shall be within the insertion, sequence, and overlap limits specified in the COLR in Mode 1 and in Mode 2 with the reactor critical. This LCO is not applicable during the performance of OPT-106A/B.

Control bank insertion limits are required, in addition to shutdown bank insertion, axial flux difference and quadrant power tilt ratio limits, to prevent power distributions that could result in fuel cladding failures in the event of a LOCA, loss of flow, ejected rod, or other accident requiring a reactor trip. Additionally, the control bank insertion limits control the reactivity that could be added in the event of a rod ejection accident, and ensure the required shutdown margin is maintained. Proper control bank sequence and overlap preserve power distribution and reactivity rate insertion assumptions. IPO-002A/B, "Plant Startup from Hot Standby," requires verification that control banks are above insertion limits during a reactor startup prior to achieving criticality. Control bank insertion, sequence and overlap limits are verified every 12 hours per OPT-102A/B. These limits are listed in the COLR.

If control bank insertion is not within limits, adequate shutdown margin must be established and verified by performing a reactivity balance calculation within 1 hour, and the control banks must be restored to within limits in 2 hours. If the control banks are not restored to within limits in 2 hours, the reactor must be shutdown within the next 6 hours. If control bank sequence or overlap limits are not met, the same action is required.

Comments / Reference: From CPSES Unit 1, Cycle 14, COLR Figure 2	Revision # 09/24/08

COLR for CPNPP Unit 1 Cycle 14

FIGURE 2

ROD BANK INSERTION LIMITS VERSUS THERMAL POWER

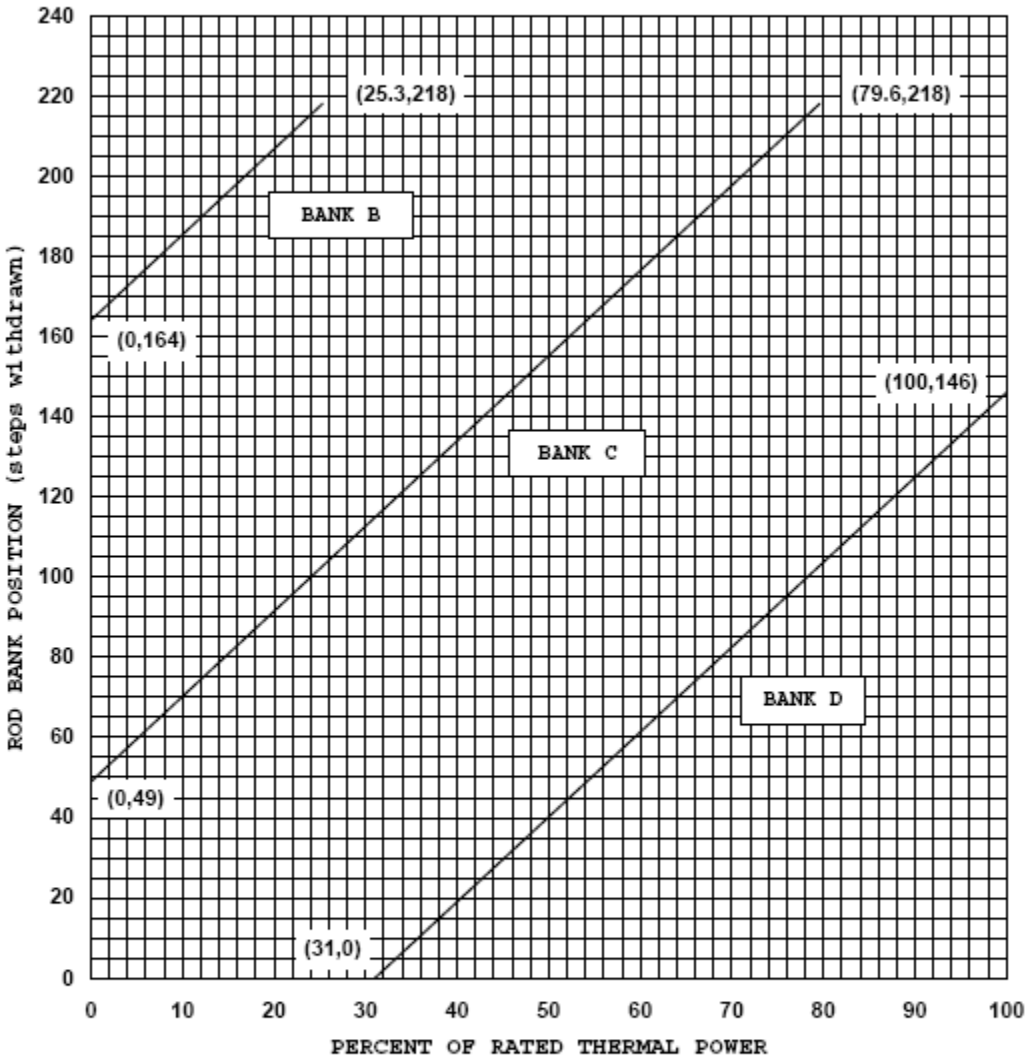

NOTES:

1. Fully withdrawn shall be the condition where control rods are at a position within the interval of 218 and 231 steps withdrawn, inclusive.

2. Control Bank A shall be fully withdrawn.

Comments / Reference: From ALM-0064A, 1-ALB-6D-2.7	Revision # 6

CPSES ALARM PROCEDURES MANUAL	UNIT 1	PROCEDURE NO. ALM-0064A
ALARM PROCEDURE 1-ALB-6D	REVISION NO. 6	PAGE 65 OF 147

ANNUNCIATOR NOM./NO.: **ANY CONTROL ROD BANK AT LO-LO LMT** 2.7

PROBABLE CAUSE:

Excessive turbine unloading rate
RIL monitor malfunction
Rod Control System malfunction
Reactor shutdown in progress
Instrument malfunction
Physics Test

NOTE: The auctioneered high N16 input to the RIL monitor is 0-150%. For an N16 failure to full scale (150%), Bank D control rods ABOVE 208 steps will NOT generate an alarm even though rods may be below a RIL extrapolated to 150% power.

AUTOMATIC ACTIONS: None

OPERATOR ACTIONS:

1. Monitor N16 power.
   - 1-JI-411A, RC LOOP 1 N16 PWR CHAN I
   - 1-JI-421A, RC LOOP 2 N16 PWR CHAN II
   - 1-JI-431A, RC LOOP 3 N16 PWR CHAN III
   - 1-JI-441A, RC LOOP 4 N16 PWR CHAN IV

   A. If one channel is indicating >6% difference between the remaining operable channels, refer to ABN-704.

2. Refer to COLR, Figure 2 to determine rod insertion limits for current power level.

3. Monitor 1-ZR-412A, CONTROL ROD INSERTION LIMIT & POSITION - BANK C & BANK D comparator.
   A. If a Rod Insertion Limit Comparator Malfunction is indicated, refer to ABN-712.

4. Stop any operator induced secondary power changes.

5. Stop any dilution in progress per SOP-104A.

6. Determine if a turbine load rejection or runback is in progress:
   - TURBINE PWR (TSE)
   - GEN MEGAWATTS
   - GEN MEGAVARS

7. Determine if rod motion is in progress on 1/1-RIL, CONTROL ROD MOTION (illuminated).
   A. If unexplained rod motion occurs refer to ABN-712.

8. Initiate action as directed by SM/US to restore Rods above insertion limits (e.g., correct condition and restore Rods > RIL, reduce Turbine load, or initiate boration per SOP-104A OR ABN-107).

9. Refer to TS 3.1.6 (Verify SDM or initiate boration to restore SDM within 1 hour, restore Rods > RIL within 2 hours) and 3.2.3.

Examination Outline Cross-reference:	Level	RO	SRO
	Tier #	2	
	Group #	2	
	K/A #	071 G 2.1.28	
	Importance Rating	4.1	

Waste Gas Disposal System: Conduct of Operations: Knowledge of the purpose and function of major system components and controls

Proposed Question: Common 37

Given the following conditions:

- The Waste Gas System is aligned in the Plant Shutdown Mode of operation on Unit 2.
- Hydrogen Recombiner X-02 is in service.
- Annunciator FEED GAS HI-HI O_2 / HI-HI H_2 / O_2 SD alarms due to oxygen feed gas concentration reading 3.7%.
- X-FCV-1118B, GWPS RCMB X-02 O_2 SPLY FLO CTRL VLV closes automatically.

Which ONE (1) of the following is the correct response of the Gaseous Waste Processing System to the Hydrogen Recombiner inlet feed gas oxygen concentration reaching 3.7%?

A. X-PCV-1107B, Hydrogen Recombiner X-02 Oxygen Supply Pressure Regulator receives a closed signal to isolate oxygen flow.

B. X-PCV-1110A and X-PCV-1110B, Nitrogen Bulk Supply to Gaseous Waste Processing System Valves receive an open signal to purge oxygen.

C. X-PCV-1103B, Hydrogen Recombiner X-02 Waste Gas Supply Pressure Control Valve receives a closed signal to stop any further gases from entering from the vent header.

D. 1- PCV-0115 and 2-PCV-0115, VCT to GWPS Isolation Valves get a closed signal to block outflow to the vent header.

Proposed Answer: D

Explanation:

A. Incorrect. Plausible because it would address the oxygen issue, however, it does not isolate flow to the Hydrogen Recombiner.
B. Incorrect. Plausible because purging with nitrogen is an oxygen or hydrogen reduction technique, however, it does not isolate flow to the Hydrogen Recombiner.
C. Incorrect. Plausible because it would address any further oxygen entry from this path, however, it does not isolate flow to the Hydrogen Recombiner.
D. Correct. Isolating the VCT Vent Valves prevents hydrogen from the VCT reaching the source of oxygen.

Technical Reference(s) OP51.SYS.GH1.LN, Pages 30 & 31 Attached w/ Revision # See Comments / Reference

Proposed references to be provided during examination: None

Learning Objective: OP51.SYS.GH1.OB02 **STATE** the functions, operation and interlocks of the following Gaseous Waste Processing System components:

- Catalytic Hydrogen Recombiners and associated components

Question Source:
Bank # _____
Modified Bank # _____ (Note changes or attach parent)
New X

Question History: Last NRC Exam _____

Question Cognitive Level:
Memory or Fundamental Knowledge _____
Comprehension or Analysis X

10 CFR Part 55 Content:
55.41 13
55.43 _____

Comments / Reference: From OP51.SYS.GH1.LN, Page 30	Revision # 03/24/03

RECOMBINER PROTECTIVE TRIPS

Due to the potential for an explosive mixture (H_2 and O_2) being generated inside the Recombiner, several protective features are provided to prevent this from occurring. Additionally, since the reaction of recombining hydrogen and oxygen is exothermic (generates heat) temperature trips are also provided. The following paragraphs discuss how these protective features work.

X-TCV-1114 and X-ECV-1119 are energized to open solenoid control valves providing redundant methods to terminate oxygen flow to the recombiner. When de-energized, X-ECV-1119 will block the control air signal to X-FCV-1118 and vent off air from the actuator closing the valve. X-TCV-1114 is located in the oxygen supply line to actually block the oxygen flow. The following trips will deenergize both solenoid valves:

- HI-HI H_2 Feed Concentration - > 9%
- HI-HI Oxygen Feed Concentration > 3.5%
- Low-Low Recombiner flow - < 1575 SCFH
- High-High O_2 Product Outlet - > 2500 ppm with 200 second time delay
- High Catalytic Reactor Outlet Temperature - 950°F
- High Temperature at Oxygen inlet - 350°F
- High Temperature at Separator inlet - 200°F

To reset any of these trips, the condition must be corrected. Manually close X-FCV-1118 using its controller and then press the reset buttons on the Recombiner Control Panel. If X-FCV-1118 is not manually closed when the reset buttons are pushed, it may open quickly to provide a large amount of oxygen feed gas into the recombiner.

NOTE: Any trip which causes X-ECV-1119 to close will also close 1 and 2-PCV-0115, VCT Vent valve.

Gas Inlet Valve (X-PCV-1103A/B)

The Gas Inlet Valve controls the pressure of the gaseous stream entering the Catalytic Hydrogen Recombiner. In Mode A operation the Outlet Flow Control Valve X-FCV-1122 is throttled to create a backpressure on the Recombiner to allow X-PCV-1103 to operate. In Mode B operation the Gas Outlet Valve is fully open and thus the Gas Inlet Valve controls both the pressure and flow rate through the Catalytic Hydrogen Recombiner due to system operating characteristics. The valve is controlled by a Foxboro Controller located on the Catalytic Hydrogen Recombiner Panel. The controller normally remains in the automatic mode of operation when its associated recombiner is in service. In automatic operation the valve will adjust as necessary to maintain the setpoint (normally 30 psig for Mode B and 34 psig for Mode A) set on the controller. In the manual mode, the Radwaste Operator can manually adjust valve position by positioning a thumbwheel located on the controller.

Nitrogen Purge Supply Valve (X-PCV-1110A/B)

Allows purging of the H_2/O_2 analyzers when the Catalytic Hydrogen Recombiner is not in operation.

Comments / Reference: From OP51.SYS.GH1.LN, Page 31	Revision # 03/24/03

Gas Outlet Valve (X-FCV-1122A/B)

The Gas Outlet Valve controls the flow rate of gas passing through the Catalytic Hydrogen Recombiner, during Mode A operation of the system. During Mode B operation of the system, the valve is fully open and the flow control function is performed by the Gas Inlet Valve. X-FCV-1122 is operated by a manual controller (made by Foxboro) on the Catalytic Hydrogen Recombiner Panel. If the valve is set too low restricting flow, recombiner pressure will increase. This causes associated X-PCV-1103A/B to throttle closed to attempt to maintain a constant pressure of 30 psig in the recombiner. As X-PCV-1103A/B throttles closed, the backpressure on the gas compressor will increase. If not corrected, it will eventually cause the gas unloader valve to open to relieve the pressure on the compressor. This results in loss of system flow and automatic shutdown of the recombiner. Normal system flow should be 2400-3000 SCFH as indicated on the Recombiner Control Panel.

Oxygen Supply Pressure Regulator X-PCV-1107A/B

X-PCV-1107 maintains a constant pressure of oxygen in the supply line to the recombiner. This regulator may be adjusted to compensate for slight variations in Recombiner pressure. Typically this regulator will be set to maintain oxygen pressure approximately 5 psig greater than Recombiner pressure.

Oxygen Flow Control Valve X-FCV-1118A/B

X-FCV-1118 controls the oxygen flow rate to maintain the appropriate oxygen concentration as compared to inlet hydrogen concentration. X-FCV-1118 is controlled via a Yokogawa controller (X-FK-1118) located on the associated Gas Analyzer Rack.

Oxygen Flow Isolation Valve X-TCV-1114A/B

X-TCV-1114 is a solenoid valve located in the oxygen supply line to the Recombiner and acts as a backup shut-off valve to isolate the flow of oxygen to the recombiner. This solenoid is energize to open. Those signals which will de-energize this solenoid and close X-TCV-1114 are discussed in the "Recombiner Protective Trips" section of these notes.

Solenoid Control Valve X-ECV-1112A/B

This valve is located between the Controller (X-FK-1118) and the positioner for X-FCV-1118. When de-energized it will isolate the control air signal to the positioner. This in turn will cause X-FCV-1118 to close. If X-FCV-1118 is full open then it will take approximately 2 minutes to close. This time delay gives the system time to respond before completely isolating oxygen. The signals which cause X-ECV-1112 to close are:

- High Feed Oxygen of 3%
- High Reactor Temp 1040°F (NOTE: if this occurs it must first be manually reset before X-ECV-1112 will re-energize.)

Solenoid Control Valve X-ECV-1119A/B

Provides for the shut off of oxygen flow should the Catalytic Hydrogen Recombiner be operating outside of its design parameters. The valve is located between the positioner and actuator for X-FCV-1118. When de-energized, X-ECV-1119 will block the control air signal to X-FCV-1118 and vent off air from the actuator closing the valve immediately. Those signals which will de-energize this solenoid and close X-FCV-1118 are discussed in the "Recombiner Protective Trips" section of these notes.

Examination Outline Cross-reference:

Level	RO	SRO
Tier #	2	
Group #	2	
K/A #	072 K5.01	
Importance Rating	2.7	

Area Radiation Monitoring System: Knowledge of the operational implications of the following concepts as they apply to the ARM system: Radiation theory, including sources, types, units, and effects

Proposed Question: Common 38

Which ONE (1) of the following identifies the use and types of detectors for the Containment High Range Radiation Area Monitors?

Containment High Range Radiation Area Monitors are equipped with _____ because of their sensitivity to _____ radiation, which is a concern in a post-accident environment.

A. Geiger-Mueller tubes; alpha and beta

B. ion chambers; alpha and beta

C. ion chambers; beta and gamma

D. Geiger-Mueller tubes; beta and gamma

Proposed Answer: C

Explanation:

A. Incorrect. Plausible because Geiger-Mueller tubes are used as Area Radiation Monitors, however, it is beta and gamma radiation that is a concern post-accident.
B. Incorrect. Plausible because Containment High Range Radiation Monitors are equipped with ion chambers, however, it is beta and gamma sensitivity that is a concern post-accident.
C. Correct. Containment High Range Area Radiation Monitors use ion chambers because of their ability to exist in a post-accident environment.
D. Incorrect. Plausible because Geiger-Mueller tubes are used as Area Radiation Monitors and it is beta and gamma radiation that is the concern, however, this type of detector could become saturated in a post-accident environment and render the readings useless.

Technical Reference(s) OP51.SYS.RM1.LN, Pages 15 & 24 Attached w/ Revision # See Comments / Reference

Proposed references to be provided during examination: None

Learning Objective: OP51.SYS.RM1.OB08

DESCRIBE how the following concepts or conditions apply to the Digital Radiation Monitoring System:

- Radiation Detection Principles
- Types of Radiation Detectors
- Radiation data evaluation as related to specific types of events or conditions

Question Source:
Bank # _____
Modified Bank # _____ (Note changes or attach parent)
New X

Question History: Last NRC Exam _____

Question Cognitive Level:
Memory or Fundamental Knowledge _____
Comprehension or Analysis X

10 CFR Part 55 Content:
55.41 9, 11
55.43 _____

Comments / Reference: From OP51.SYS.RM1.LN, Page 15	Revision # 08/30/04
The area monitors use several different types of detectors and hardware configurations to provide detection and alarm over a large dose range. Two types of area monitors are used, the Low Range Monitor and the High Range Monitor. These monitors provide high radiation alarms on increased radiation levels. The low range area monitors typically use Geiger-Mueller (GM) tubes for detection. The high range area monitors typically use Ion Chamber detectors and are primarily a post accident monitor. The detectors provide input to the RM-80 monitor.	
Comments / Reference: From OP51.SYS.RM1.LN, Page 24	Revision # 08/30/04
Ionization Chambers are used as detectors in high radiation area monitors. Ionization chambers operate in the proportional region of the gas-filled detector characteristic curve. In this region, the output of the detector is proportional to the number of radiation events occurring; that is, as more ions are produced in the tube, the output will increase at the same rate.	

Examination Outline Cross-reference:	Level	RO	SRO
	Tier #	1	
	Group #	1	
	K/A #	007 EK1.05	
	Importance Rating	3.3	

Reactor Trip - Stabilization - Recovery: Knowledge of the operational implications of the following concepts as they apply to the reactor trip: Decay power as a function of time

Proposed Question: Common 39

Given the following conditions:

- FRS-0.1A, Response to Nuclear Power Generation/ATWT is being implemented.
- Step 3 of FRS-0.1A directs the operator to Verify Total AFW Flow - GREATER THAN 860 GPM.

Which ONE (1) of the following is the reason for performing this action?

A. To ensure sufficient Auxiliary Feedwater flow would be available if one Auxiliary Feedwater Pump was to trip.

B. To prevent an excessive Steam Generator cooldown from complicating the Functional Recovery procedure.

C. To ensure sufficient Auxiliary Feedwater flow is present to remove decay heat from power operation during an ATWT event.

D. Steam Generator water level will be maintained by AFW to cover the Steam Generator U-tubes in the event of a concurrent tube rupture.

Proposed Answer: C

Explanation:

A. Incorrect. Plausible because the MDAFW Pumps have a capacity of 570 gpm and the TDAFW Pump has a capacity of 1145 gpm, however, the flow rate is based on decay heat generation.
B. Incorrect. Plausible because a cooldown would insert positive reactivity and could make the event worse.
C. Correct. Per the basis document, the flow rate of Auxiliary Feedwater ensures adequate capacity to remove decay heat.
D. Incorrect. Plausible because for SGTRs having the Steam Generator U-tubes covered is important for partitioning, however, in this event it is the required AFW flow to remove decay heat.

Technical Reference(s) FRS-0.1A, Attachment 2, Step 3
OP51.STS.AF1.LN, Pages 17 & 21
Attached w/ Revision # See Comments / Reference

Proposed references to be provided during examination: None

Learning Objective: OPD1.FRS.XH1.OB01 — Given a major action step of FRS-0.1 or FRS-0.2, **STATE** the basis for the step.

Question Source:
- Bank # MCO.MI5.OB104-18
- Modified Bank # _____ (Note changes or attach parent)
- New _____

Question History: Last NRC Exam _____

Question Cognitive Level:
- Memory or Fundamental Knowledge X
- Comprehension or Analysis _____

10 CFR Part 55 Content:
- 55.41 4, 10
- 55.43 _____

Comments / Reference: From FRS-0.1A, Attachment 2, Step 3	Revision # 8

CPSES EMERGENCY RESPONSE GUIDELINES	UNIT 1	PROCEDURE NO. FRS-0.1A
RESPONSE TO NUCLEAR POWER GENERATION/ATWT	REVISION NO. 8	PAGE 17 OF 30

ATTACHMENT 3
PAGE 2 OF 15

BASES

Tripping the turbine raises RCS temperatures (forcing Steam Generator pressure up to the Steam Generator safety valve setpoints) and reduces reactor power level. Raising Steam Generator pressure and reducing reactor power level results in a reduction in the rate at which the Steam Generator drys out. Overall, tripping the turbine results in an RCS pressure spike which is less than 3200 psig (ATWT analyses maximum pressure for the reactor vessel).

If the turbine will not trip, a pull-out on EHC fluid pumps will also reduce steam flow in a delayed manner. If the turbine stop valves cannot be closed by either trip or pull-out on EHC pumps, the MSIVs should be closed.

For other ATWT events, with the exception of when a turbine trip is the initiating event, manual tripping of the turbine may yield a somewhat higher system pressure, depending on the initiating event and time in core life, than what would otherwise be expected. However, this action has been determined to be necessary since there are many initiating ATWT events and some that require immediate mitigating actions, diagnosis of the initiating event would not be feasible and separate guidance for different ATWT events would complicate training and could delay timely performance of necessary operator actions.

The action to verify Main Steam isolation valve position is intended to include the actions to verify the Main Steam isolation bypass valves closed, in the event the bypass valves have been opened during startup operation(e.g., Main Steamline warmup).

STEP 3: The MDAFW pumps start automatically on an SI signal or SG low level to provide feed to the SGs for decay heat removal. If SG levels drop below the appropriate setpoint, the TDAFW pump will also automatically start to supplement the MD pumps. The ATWT analyses have shown that actuation of AFW within 60 seconds after the failure to trip provides acceptable results. The 860 gpm gpm flow requirement is indicative of adequate Auxiliary Feedwater flow (AFW pumps) to meet the minimum flow assumption for an ATWT.

Comments / Reference: From OP51.STS.AF1.LN, Page 17	Revision # 03/31/08
MDAFW PUMPS The two MDAFW pumps are horizontal, split casing, 9 stage centrifugal pumps. They are powered by 700 hp, 3570 rpm, 60 HZ motors. Normal power supply is from the 6.9 KV safeguards buses uEA1 and uEA2. Maximum pump capacity is 570 gpm at a maximum developed head of 1370 psig.	
Comments / Reference: From OP51.STS.AF1.LN, Page 21	Revision # 03/31/08
TDAFW PUMP The TDAFW pump is a horizontal, split casing, 6 stage, centrifugal pump. Pump capacity is 1145 gpm at 4075 rpm at a maximum developed head of 3236 ft. The turbine driver is a type GS-2N single stage, helical flow, horizontal split casing, ring lubricated impulse turbine. The turbine is powered by steam supplied from lines connected to main steam loops 1 and 4, upstream of the main steam isolation valves. The operating main steam pressure range for the TDAFW pump is from 1275 psig to 103 psig at a maximum steam temperature of 580°F.	

Examination Outline Cross-reference:	Level	RO	SRO
	Tier #	1	
	Group #	1	
	K/A #	058 AA2.02	
	Importance Rating	3.3	

Loss of DC Power: Ability to determine and interpret the following as they apply to the Loss of DC Power: 125 VDC bus voltage, low/critical low, alarm

Proposed Question: Common 40

Given the following conditions:

- Unit 1 is operating at 100% power with all systems in normal alignment.
- Battery Disconnect Switch SW1/1ED1 was inadvertently opened.

Which ONE (1) of the following would provide the Control Room with indication of this condition?

A. Low Bus Voltage indicated on DC Bus 1ED1 voltmeter on CB-11.

B. SSII Train A alarms for SSW, ECCS, CS, MDAFW, DG PWR, SFTY CH WTR, CR HVAC, CCW and RHR.

C. High amperage on Battery BT1ED1 ammeter on CB-11.

D. SSII Train B alarms for SSW, ECCS, CS, MDAFW, DG PWR, SFTY CH WTR, CR HVAC, CCW and RHR.

Proposed Answer: B

Explanation:

A. Incorrect. Plausible because the location of the voltmeter with respect to the DC Bus and the Battery. One must determine that voltage will be maintained by the Battery Charger.
B. Correct. These are the correct alarm indications for the conditions listed.
C. Incorrect. Plausible because of the location of the ammeter with respect to the DC Bus and the Battery. One must determine that the ammeter will be indicating outflow from the battery and not the Battery Charger amperage.
D. Incorrect. Plausible because one must determine the proper Train for the Battery versus the alarm indications given.

Technical Reference(s) OP51.SYS.DC1.LN, Page 32
ALM-1901A, SSII Train “AA”
Attached w/ Revision # See Comments / Reference

Proposed references to be provided during examination: None

Learning Objective: OP51.SYS.DC1.OB06

STATE the location (if applicable) of the following indications and controls, and **DESCRIBE** how each is interpreted or used to predict, monitor, or control changes in the DC Electrical system.

- 125 Volt DC Switch Panels uED1, uED2, uED3 and uED4 voltage (Control Room)
- Battery BTuED1/BTuED2/BTuED3/BTuED4 current (Control Room)
- DC Buses (Local)
- Circuit Breaker for each Battery Charger for connection to respective bus

Question Source: Bank # _____
Modified Bank # _____ (Note changes or attach parent)
New X

Question History: Last NRC Exam _____

Question Cognitive Level: Memory or Fundamental Knowledge _____
Comprehension or Analysis X

10 CFR Part 55 Content: 55.41 7
55.43 _____

Comments / Reference: From OP51.SYS.DC1.LN, Page 32	Revision # 12/05/03

Battery chargers utilize main control board annunciators to warn operators of abnormal charger conditions. The annunciator appears as a "battery charger trouble" alarm on the main control board CB-11. Any battery charger condition causing a panel-mounted alarm pilot light will also result in the “battery charger trouble” alarm in the control room. The “trouble” alarm is interlocked with the battery charger AC input breaker so that the alarm conditions will only be annunciated if the AC input breaker is closed. No trips are associated with the battery chargers.

The Safety System Inoperable Indicator (SSII) in the control room monitors numerous parameters in the Class 1E 125 VDC System (uED1, uED2, uED3 or uED4). As described in ALM-1901, it provides an alarm if certain components are taken out of their normal operating alignment (circuit breakers, disconnect switches, etc). An alarm is also generated if an undervoltage condition or a monitored blown fuse condition occurs on these busses.

Comments / Reference: From ALM-1901A, Alarm Procedure SSII Train "AA"	Revision # 5

CPSES ALARM PROCEDURES MANUAL	UNIT 1	PROCEDURE NO. ALM-1901A
ALARM PROCEDURE SSII TRAIN "AA"	REVISION NO. 5	PAGE 38 OF 44

ANNUNCIATOR NOM./NO.: **125V DC** 2.7

PROBABLE CAUSE:

125 VDC System malfunction

AUTOMATIC ACTIONS: None

OPERATOR ACTIONS:

1. Notify Shift Manager of the SSII actuation.
2. Determine cause of alarm (see logic).
3. Refer to ODA-308.
4. Refer to TS 3.8.4, 3.8.5, 3.8.9, and 3.8.10.
5. Refer to the associated windows for Tech Specs affecting associated systems.
   Windows: 1.1 SSW
   1.2 ECCS
   1.3 CS
   1.4 MDAFW
   1.7 DG PWR
   1.9 SFTY CH WTR
   1.10 CR HVAC
   2.1 CCW
   2.2 RHR
6. Correct the condition or initiate a work request per STA-606.

Comments / Reference: From ALM-1901A, Alarm Procedure SSII Train "AA"	Revision # 5

CPSES ALARM PROCEDURES MANUAL	UNIT 1	PROCEDURE NO. ALM-1901A
ALARM PROCEDURE SSII TRAIN "AA"	REVISION NO. 5	PAGE 37 OF 44

ANNUNCIATOR NO.: 2.7

LOGIC:

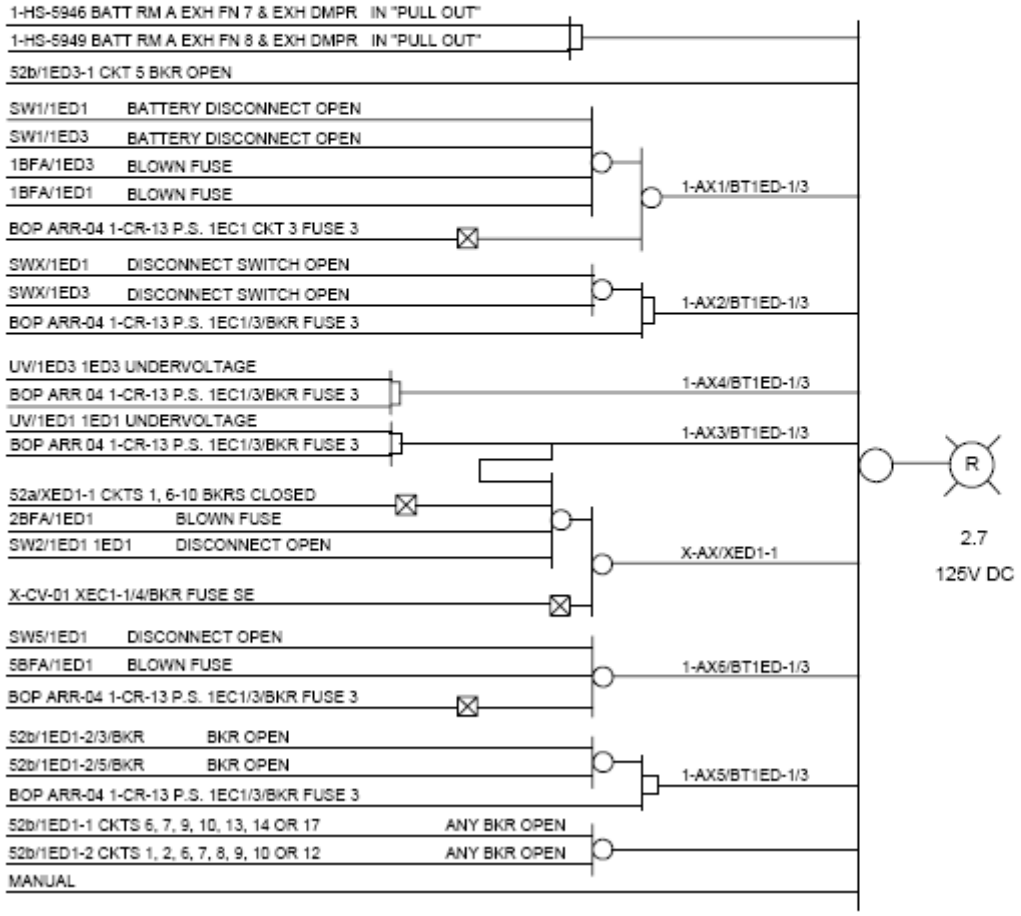

Examination Outline Cross-reference:

Level	RO	SRO
Tier #	1	
Group #	1	
K/A #	W/E 11 EK2.1	
Importance Rating	3.6	

Loss of Emergency Coolant Recirculation: Knowledge of the interrelations between the Loss of Emergency Coolant Recirculation and the following: Components, and functions of control and safety systems, including instrumentation signals, interlocks, failure modes, and automatic and manual features

Proposed Question: Common 41

Given the following condition:

- Containment pressure is 24 psig and slowly lowering.

Which ONE (1) of the following is the reason why ECA-1.1A, Loss of Emergency Coolant Recirculation takes precedence over FRZ-0.1A, Response to High Containment Pressure regarding Containment Spray Pump operation?

A. Implementation of ECA-1.1A, Loss of Emergency Coolant Recirculation removes support systems for Containment Spray Pump operation.

B. Reduced Containment Spray Pump operation is desired to conserve Refueling Water Storage Tank inventory.

C. Implementation of ECA-1.1A, Loss of Emergency Coolant Recirculation will start Containment Fan Coolers which will make Containment Spray Pump operation unnecessary.

D. Reduced Containment Spray Pump operation has little or no effect on Containment heat removal capability.

Proposed Answer: B

Explanation:

A. Incorrect. Plausible if thought that the resetting of signals in the first 7 steps of ECA-1.1A had a deleterious effect on the operation of the Containment Spray Pumps.
B. Correct. With a Loss of Emergency Coolant Recirculation, reduced Containment Spray Pump operation is desired to preserve/conserve RWST inventory. ECA-1.1A will direct the operator to secure all Containment Spray Pumps when Containment pressure is less than 18 psig.
C. Incorrect. Plausible because this is performed in ECA-1.1A at Step 8, however, only if Containment pressure has remained less than 5 psig.
D. Incorrect. Plausible because the statement itself is true, however, it is not the reason why ECA-1.1A takes precedence over FRZ-0.1A.

Technical Reference(s) FRZ-0.1A, Step 4.d
FRZ-0.1A, Attachment 6, Step 4 Bases
ECA-1.1 A, Steps 1 to 8

Attached w/ Revision # See Comments / Reference

Proposed references to be provided during examination: None

Learning Objective: LO41.FRZ.XH5.OB01 Given a major action step of FRZ-0.1A/B, FRZ-0.2 A/B, or FRZ-0.3 A/B, **STATE** the basis for the step.

Question Source:
Bank # FRZ.XH5.OB402-1
Modified Bank # _____ (Note changes or attach parent)
New _____

Question History: Last NRC Exam _____

Question Cognitive Level:
Memory or Fundamental Knowledge _____
Comprehension or Analysis X

10 CFR Part 55 Content:
55.41 10
55.43 _____

Comments / Reference: From FRZ-0.1A, Step 4.d	Revision # 8

CPSES EMERGENCY RESPONSE GUIDELINES	UNIT 1	PROCEDURE NO. FRZ-0.1A
RESPONSE TO HIGH CONTAINMENT PRESSURE	REVISION NO. 8	PAGE 4 OF 25

STEP	ACTION/EXPECTED RESPONSE	RESPONSE NOT OBTAINED
	NOTE: Component Cooling Water supply to the unit instrument air compressors isolates on a Phase B isolation signal.	
4	Check If Containment Spray Is Required:	
	a. Containment pressure - HAS INCREASED TO GREATER THAN 18.0 PSIG • 1-ALB-2B window 1-8, CS ACT - ILLUMINATED -OR- • 1-ALB-2B window 4-11 CNTMT ISOL PHASE B ACT - ILLUMINATED -OR- • Containment pressure - GREATER THAN 18.0 PSIG	a. Return to procedure and step in effect.
	b. Verify all RCPs - STOPPED	b. Manually stop all RCPs.
	c. Verify Containment Isolation Phase B Valves- CLOSED • Verify 1-MLB-4A3 and 4B3 - ORANGE LIGHTS LIT	c. Manually actuate Phase B. IF valve(s) NOT closed, THEN manually close valve(s). (Refer to Attachment 5)
	d. Verify ECA-1.1A, LOSS OF EMERGENCY COOLANT RECIRCULATION is NOT in effect.	d. Operate containment spray per ECA-1.1A, LOSS OF EMERGENCY COOLANT RECIRCULATION. Go to Step 5.

Comments / Reference: From FRZ-0.1A, Attachment 6, Step 4 Bases	Revision # 8

ATTACHMENT 6
PAGE 3 OF 8

BASES

STEP 3: This step instructs the operator to verify that isolation of the non-essential ventilation penetrations has occurred to prevent potential release of radioactive materials from containment.

One side of the containment ventilation penetration being isolated is sufficient to ensure containment isolation. Subsequent steps may be performed; however, actions to close the redundant isolation damper(s) or valves should be pursued as time allows.

Containment ventilation isolation is verified using green windows on 1-MLB-45A and 45B. The windows should be lit when the dampers or valves are correctly aligned.

NOTE: Note identifies that a support system (Instrument Air) is isolated due to a signal as result of the high containment pressure. The loss of CCW to the Unit Instrument Air Compressors would result in unavailability of those compressors. If the air compressor had already been re-aligned as directed in other procedure steps, this condition will eventually result in a trip of the compressor(s).

STEP 4: This step instructs the operator to verify containment spray, since this procedure is entered either when containment pressure exceeds HI-3 (containment spray initiation) or when containment pressure exceeds containment design pressure. When containment pressure exceeds the HI-3 setpoint, containment spray is required and should be automatically initiated to mitigate the containment pressure transient. Containment isolation Phase B valves are also closed to isolate potential radioactive release paths from containment. Therefore, if containment spray is required, the operator should ensure that the containment spray pumps are running, that containment isolation phase B valves are closed, that the containment spray system valves are in the proper emergency alignment, and ensure RCPs are stopped. Proper Phase B isolation is indicated by 1-MLB-4A3 and 1-MLB-4B3 orange windows lit.

The operation of the containment spray pumps directed in ECA-1.1A, LOSS OF EMERGENCY COOLANT RECIRCULATION, takes precedence over that direction provided in Step 4 of this procedure. This procedure specifies maximum available heat removal system operability in order to reduce containment pressure. ECA-1.1A uses a less restrictive criteria since recirculation flow to the RCS is not available and it is important to conserve RWST water by allowing reduced spray pump operation.

Comments / Reference: From ECA-1.1 A, Step 8	Revision # 8

CPSES EMERGENCY RESPONSE GUIDELINES	UNIT 1	PROCEDURE NO. ECA-1.1A
LOSS OF EMERGENCY COOLANT RECIRCULATION	REVISION NO. 8	PAGE 4 OF 79

STEP	ACTION/EXPECTED RESPONSE	RESPONSE NOT OBTAINED
8	Check If Containment Fan Coolers Should Be Started	
	a. Verify containment pressure - HAS REMAINED LESS THAN 5 PSIG.	a. Notify Plant Staff to determine if Containment Fan Coolers should be started to provide containment cooling. Go to Step 9.

Comments / Reference: From ECA-1.1 A, Steps 1 to 7	Revision # 8

CPSES EMERGENCY RESPONSE GUIDELINES	UNIT 1	PROCEDURE NO. ECA-1.1A
LOSS OF EMERGENCY COOLANT RECIRCULATION	REVISION NO. 8	PAGE 3 OF 79

STEP	ACTION/EXPECTED RESPONSE	RESPONSE NOT OBTAINED

CAUTION: If emergency coolant recirculation capability is restored during this procedure, further recovery actions should continue by returning to procedure and step in effect.

CAUTION: If suction source is lost to any ECCS or Containment Spray pump, the pump should be stopped and the Plant Staff should be notified of the condition.

1	Check If Emergency Coolant Recirculation Equipment - AVAILABLE PER ATTACHMENT 2.	Restore at least one train.
2	IF The Diesels Are Running, THEN Place Both DG EMER STOP/START Handswitches in START	

CAUTION: If offsite power is lost after SI reset, manual action may be required to restore safeguards equipment to desired status.

3 Reset SI If Necessary.

4 Reset SI Sequencers If Necessary.

5 Reset Containment Isolation Phase A and Phase B

6 Reset Containment Spray Signal

7 Reset RHR Auto Switchover.

Examination Outline Cross-reference:

Level	RO	SRO
Tier #	1	
Group #	1	
K/A #	062 AA1.07	
Importance Rating	2.9	

Loss of Nuclear Service Water: Ability to operate and/or monitor the following as they apply to the Loss of Nuclear Service Water: Flow rates to the components and systems that are serviced by the SWS; interactions among the components

Proposed Question: Common 42

Given the following conditions:

- Unit 1 is in a Refueling outage and is currently in MODE 6 with the cavity flooded.
- Unit 2 has tripped and during post-trip actions lost both trains of Station Service Water.
- The only available Unit 1 Station Service Water Pump, 1-01, has been aligned to supply the Unit 2 Station Service Water Train B.

Which ONE (1) of the following describes the flowpath for this alignment?

The Unit 1 Station Service Water Pump, 1-01, is running with discharge valve full open discharging though the cross-tie line and...

A. through the Unit 2 Station Service Water Pump (2-02) Discharge Valve throttled to limit total flow read on both headers to less than 18,600 gpm.
Unit 1 Train A CCW Heat Exchanger, Unit 2 Train B CCW Heat Exchanger, and Unit 2 Train B Centrifugal Charging Pump are aligned for flow.

B. through the cross-tie valve throttled to limit total flow read on both headers to less than 18,600 gpm.
Unit 1 Train A CCW Heat Exchanger, Unit 2 Train B CCW Heat Exchanger, and Unit 2 Train B Centrifugal Charging Pump are aligned for flow.

C. through the cross-tie valve throttled to limit total flow read on both headers to less than 18,600 gpm.
Components supplied are Unit 1 Train A CCW Heat Exchanger and Unit 2 Train B CCW Heat Exchanger.

D. through the Unit 2 Station Service Water Pump (2-02) Discharge Valve throttled to limit total flow read on both headers to less than 18,600 gpm.
Components supplied are Unit 1 Train A CCW Heat Exchanger and Unit 2 Train B CCW Heat Exchanger.

Proposed Answer: A

Explanation:

A. Correct. Flow is from Unit 1 SSW Pump 1-01 through full open discharge, crosstie line and Unit 2 SSW Pump 2-02 discharge which is at 15% on initial pump start and then throttled full open or until pump runout flow of 18,600 gpm. Unit 1 Train A CCW Heat Exchanger, Unit 2 Train B CCW Heat Exchanger, and Unit 2 Train B Centrifugal Charging Pump are aligned for flow.

B. Incorrect. Plausible because flowpath is correct but the 1-01 discharge is throttled only to keep pump from runout flow.

C. Incorrect. Plausible because the flow path is correct and flow concern correct but throttled component is 2-02 pump discharge.

D. Incorrect. Plausible because the flow path is correct and flow concern correct but throttled component is 2-02 pump discharge.

Technical Reference(s) SOP-501A, Attached w/ Revision # See Comments / Reference

Proposed references to be provided during examination: None

Learning Objective: OP51.SYS.SW1.OB11

DESCRIBE the following procedures which govern the operation of the Station Service Water System, including significant prerequisites, precautions, notes, and steps associated with each operating procedure, and where applicable, the bases for performing those steps:

- SOP-501A/B, Station Service Water System
- ABN-501, Station Service Water System Malfunctions

Question Source:

Bank #		
Modified Bank #		(Note changes or attach parent)
New	X	

Question History: Last NRC Exam

Question Cognitive Level:

Memory or Fundamental Knowledge	
Comprehension or Analysis	X

10 CFR Part 55 Content:

55.41	10
55.43	

Comments / Reference: From	Revision # 16

CPSES SYSTEM OPERATING PROCEDURE MANUAL	UNIT 1 & COMMON	PROCEDURE NO. SOP-501A
STATION SERVICE WATER SYSTEM	REVISION NO. 16	PAGE 51 OF 74

5.7.3 A Single Unit 1 SSW Pump Supplying Service Water Flow to Both Units

This section describes the steps to supply one train on both units from one Station Service Water Pump. Worst Case Conditions are assumed with Unit 1 in Mode 5 or 6 and Unit 2 in Mode 3 or 4.

CAUTION: This evolution should only be performed when directed to do so in accordance with ABN-501. Performance of this section affects the operability of Unit 1 and Unit 2.

A. Ensure the following conditions for the Unit 2 SSW Train:

- ☐ Unit 2 is operating in Mode 3 or 4.
- ☐ Service Water is only required to supply a CCW Heat Exchanger and Charging Pump Lube Oil Coolers.
- ☐ A Safety Injection signal is NOT present.
- ☐ A Loss of Offsite power has NOT occurred.
- ☐ Steam Dumps are available.
- ☐ One Reactor Coolant Pump is available.
- ☐ RHR NOT being used for cooldown.

B. Ensure the following conditions for the Unit 1 SSW Train:

- ☐ Unit 1 is operating in Mode 5 or 6.
- ☐ Service Water is only required to supply the CCW Heat Exchanger.
- ☐ One pump is lined up AND operating per SOP-501A.
- ☐ A Safety Injection signal is NOT present.
- ☐ A Loss of Offsite power has NOT occurred.

5.7.3 C. 3) Isolate flow to the selected Diesel Generator by Closing the following valve for the selected train:

Train A SSW

☐ • 1-HS-4393, DG 1 CLR SSW RET VLV

Train B SSW

☐ • 1-HS-4394, DG 2 CLR SSW RET VLV

D. Perform the following for the Unit 2 Service Water Train:

1) Place the selected train handswitches in PULL-OUT:

Train A SSW

☐ • 1/2-APSI1, SIP 1

☐ • 2-HS-4764, CSP 1

☐ • 2-HS-4765, CSP 3

Train B SSW

☐ • 1/2-APSI2, SIP 2

☐ • 2-HS-4766, CSP 2

☐ • 2-HS-4767, CSP 4

2) Isolate Service Water flow by Closing the following valves for the selected train:

Train A SSW

☐ • 2SW-0362, SI PMP 2-01 L\O CLR SSW IN ISOL VLV

☐ • 2SW-0420, CS PMP 2-01/2-03 BRG CLR SSW IN VLV

Train B SSW

☐ • 2SW-0361, SI PMP 2-02 L\O CLR SSW IN ISOL VLV

☐ • 2SW-0418, CS PMP 2-02/2-04 BRG CLR SSW IN VLV

5.7.3 C. Perform the following for the Unit 1 Service Water Train:

1) Place the selected train handswitches in PULL-OUT:

Train A SSW

- ☐ 1/1-APSI1, SIP 1
- ☐ 1-HS-4764, CSP 1
- ☐ 1-HS-4765, CSP 3
- ☐ 1/1-APCH1, CCP 1

Train B SSW

- ☐ 1/1-APSI2, SIP 2
- ☐ 1-HS-4766, CSP 2
- ☐ 1-HS-4767, CSP 4
- ☐ 1/1-APCH2, CCP 2

2) Isolate Service Water flow by Closing the following valves for the selected train:

Train A SSW

- ☐ 1SW-0404, SI PMP 1-01 L\O CLR SSW STRN 1-01 IN ISOL VLV
- ☐ 1SW-0399, CS PMP 1-01/1-03 BRG CLR SSW IN ISOL
- ☐ 1SW-0358, CCP 1-01 L\O CLR SSW IN ISOL VLV

Train B SSW

- ☐ 1SW-0402, SI PMP 1-02 L\O CLR SSW STRN 1-02 IN ISOL VLV
- ☐ 1SW-0396, CS PMP 1-02/1-04 BRG CLR SSW IN VLV
- ☐ 1SW-0356, CCP 1-02 L\O CLR SSW IN ISOL VLV

5.7.3 D. 3) Isolate flow to the selected Diesel Generator by Closing the following valve for the selected train:

Train A SSW

☐ • 2-HS-4393, DG 1 CLR SSW RET VLV

Train B SSW

☐ • 2-HS-4394, DG 2 CLR SSW RET VLV

4) Open the Power Supply to the Unit 2 SSW Pump Discharge Valve on the train that is to be supplied from Unit 1.

Train A SSW

☐ • 2EB3-3/1M/BKR, SSW PUMP 2-01 DISCHARGE VALVE 4286 MOTOR BREAKER

Train B SSW

☐ • 2EB4-3/2E/BKR, SSW PUMP 2-02 DISCHARGE VALVE 4287 MOTOR BREAKER

5) Place the selected train handswitch in PULL-OUT:

Train A SSW

☐ • 2-HS-4250A, SSWP 1

Train B SSW

☐ • 2-HS-4251A, SSWP 2

E. Manually Open the Discharge Valve 15% on the train to be supplied from Unit 1 (12 turns).

Train A SSW

☐ • 2-HV-4286, SSW PMP 2-01 DISCH VLV

Train B SSW

☐ • 2-HV-4287, SSW PMP 2-02 DISCH VLV

5.7.3 F. Unlock AND Open Unit 1 SSW supply to Unit 2 from the selected SSW Pump.

Train A SSW

☐ • XSW-0008, SSW PMP 1-01 DISCH HDR TO XTIE HDR ISOL VLV

Train B SSW

☐ • XSW-0007, SSW PMP 1-02 DISCH HDR TO XTIE HDR ISOL VLV

☐ G. Unlock AND Open XSW-0006, U1/U2 SSW XTIE HDR ISOL VLV.

H. Unlock AND Open the Unit 1/Unit 2 cross connect for the train to be supplied.

Train A SSW

☐ • XSW-0028, SSW PMP 2-01 DISCH HDR TO XTIE HDR ISOL VLV

Train B SSW

☐ • XSW-0029, SSW PMP 2-02 DISCH HDR TO XTIE HDR ISOL VLV

☐ I. Slowly Open XSW-0033, U1 SSW PMP TO U2 SSW PUMP XTIE HDR VNT VLV until a steady stream of water is verified.

J. Manually Slowly Open SSW Pump Discharge Valve on the loop to be placed in service.

☐ • 2-HV-4286, SSW PMP 2-01 DISCH VLV

☐ • 2-HV-4287, SSW PMP 2-02 DISCH VLV

CAUTION: To prevent pump runout, total pump discharge flow (flow indicated on Unit 1 added to flow indicated on Unit 2) shall not exceed 18,600 gpm .

5.7.3 K. Verify system pressure and flow stabilizes.

Train A SSW

☐ • 1-PI-4252A, SSWP 1 DISCH PRESS

☐ • 1-FI-4258A, SSWP 1 DISCH FLO

☐ • 2-FI-4258A, SSWP 1 DISCH FLO

Train B SSW

☐ • 1-PI-4253A, SSWP 2 DISCH PRESS

☐ • 1-FI-4259A, SSWP 2 DISCH FLO

☐ • 2-FI-3259A, SSWP 2 DISCH FLO

☐ L. Adjust system flowrates per Attachment 3 to maintain the optimum cooling capability during single pump operation.

NOTE: If the alignment of the Screenwash Pump Suction is changed, the SSW system status file and the Locked Component Deviation Log should be updated.

Examination Outline Cross-reference:	Level	RO	SRO
	Tier #	1	
	Group #	1	
	K/A #	065 AA2.05	
	Importance Rating	3.4	

Loss of Instrument Air: Ability to determine and interpret the following as they apply to the Loss of Instrument Air: When to commence plant shutdown if instrument air pressure is decreasing

Proposed Question: Common 43

Given the following conditions:

- Unit 1 is operating at 100% power when Instrument Air header pressure begins to lower.
- The crew is unable to stop Instrument Air pressure from lowering.

In accordance with ABN- 301, Instrument Air System Malfunction, when Instrument Air pressure decreases to _____ psig, the _____.

A. 85; Unit should be shutdown per IPO-003A, Power Operation.

B. 35; Reactor will automatically trip.

C. 35; Reactor should be manually tripped.

D. 45; Unit should be shutdown per IPO-003A, Power Operation.

Proposed Answer: C

Explanation:

A. Incorrect. Plausible because 85 psig is the pressure at which actions (per Step 2.3.2) must be performed, however, the Unit would not be shutdown.
B. Incorrect. Plausible because the setpoint is correct, however, the Reactor will not automatically trip.
C. Correct. The Reactor should be manually tripped when instrument air pressure reaches 35 psig.
D. Incorrect. Plausible because valves start to drift to their fail position at 45 psig, therefore a Unit shutdown would be desirable. See NOTE before Step 2.3.5.

Technical Reference(s) ABN-301, Step 2.3.5 RNO
ABN-301, Step 2.3.2

Attached w/ Revision # See Comments / Reference

Proposed references to be provided during examination: None

Learning Objective: OP51.SYS.IA1.OB14

ANALYZE the indications and **DESCRIBE** the mitigation strategy and major steps taken relative to the Instrument Air System, both initial and subsequent, for:

- ALM-0011A/B, Alarm Procedure u-ALB-1
- ABN-301, Instrument Air System Malfunction

Question Source: Bank # SYS.IA1.OB14-3
Modified Bank # _____ (Note changes or attach parent)
New _____

Question History: Last NRC Exam _____

Question Cognitive Level: Memory or Fundamental Knowledge _____
Comprehension or Analysis X

10 CFR Part 55 Content: 55.41 7, 10
55.43 _____

Comments / Reference: From ABN-301, Step 2.3.5 RNO | Revision # 11

CPNPP ABNORMAL CONDITIONS PROCEDURES MANUAL	UNIT 1 AND 2	PROCEDURE NO. ABN-301
INSTRUMENT AIR SYSTEM MALFUNCTION	REVISION NO. 11	PAGE 9 OF 118

2.3 Operator Actions

ACTION/EXPECTED RESPONSE	RESPONSE NOT OBTAINED

NOTE: Equipment controlled by instrument air will commence to fluctuate or drift to its failed position when instrument air pressure decreases to a range of 35 psig to 45 psig.

5	Check status of Instrument Air:	Perform the following:
☐ a.	Verify instrument air malfunction - REPAIRED OR ISOLATED	IF in MODE 1, 2, 3, OR 4 AND Instrument Air Header pressure decreases to 35 psig OR control of system(s) is lost, THEN manually trip the reactor AND GO TO EOP-0.0A/B while other operator(s) continue this procedure.
☐ b.	Verify Instrument Air Header pressure - GREATER THAN 45 psig AND INCREASING	
☐ c.	GO TO Section 3.0, this procedure.	IF RHR operation is affected during this procedure, THEN perform ABN-104 while continuing this procedure.

Comments / Reference: From ABN-301, Step 2.3.2	Revision # 11

CPNPP ABNORMAL CONDITIONS PROCEDURES MANUAL	UNIT 1 AND 2	PROCEDURE NO. ABN-301
INSTRUMENT AIR SYSTEM MALFUNCTION	REVISION NO. 11	PAGE 5 OF 118

2.3 Operator Actions

ACTION/EXPECTED RESPONSE	RESPONSE NOT OBTAINED
☐ 2 Verify Instrument Air Header Pressure - GREATER THAN OR EQUAL TO 85 psig: • u-PI-3488, INST AIR AFTFILT OUT PRESS	Perform the following: a. Start AND align a common Instrument Air Compressor per SOP-509A. b. Attempt to restart the tripped compressor per SOP-509A/B Diagnostic Guideline. c. IF TPCW is NOT available to Instrument Air Compressor X-01, THEN align CCW cooling to compressor per Attachment 8. d. IF temporary air compressor available, THEN ensure it is started AND aligned per SOP-509A/B. e. Stop all unnecessary use of instrument air. [R] • Announce over Plant Page System, "ATTENTION ALL PERSONNEL, WE HAVE A LOSS OF INSTRUMENT AIR, ANYONE USING INSTRUMENT AIR AS BREATHING AIR MUST GO TO A SAFE ATMOSPHERE AND STOP BREATHING THE INSTRUMENT AIR. STOP ALL UNNECESSARY EVOLUTIONS REQUIRING INSTRUMENT AIR USAGE UNTIL FURTHER NOTICE". f. Ensure Unit 2 checks Attachment 13 for components affected by loss of Unit 1 instrument air. g. Dispatch an auxiliary operator to determine cause of low instrument air pressure. h. Ensure closed uCI-0050, INST AIR RCVR u-01 U-u XTIE VLV (ECB 778 Rm X-113 near air dryers). i. Refer to EPP-201.

Examination Outline Cross-reference:

Level	RO	SRO
Tier #	1	
Group #	1	
K/A #	038 G 2.1.19	
Importance Rating	3.9	

Steam Generator Tube Rupture: Conduct of Operations: Ability to use plant computers to evaluate system or component status

Proposed Question: Common 44

Given the following conditions:

- Unit 1 Main Steam Line #4 Radiation Monitor alarms 10 seconds prior to a Reactor trip and Safety Injection.
- Auxiliary Feedwater flow has been secured to Steam Generator #4.
- Narrow range level in Steam Generator #4 continues to increase at a greater rate than the other Steam Generators.
- During performance of EOP-0.0A, Reactor Trip or Safety Injection it is observed that all Radiation Monitors on PC-11, Digital Radiation Monitoring System are GREEN.

Which ONE (1) of the following would be appropriate when Step 13, "Check if SG Tubes are Not Ruptured" is reached in EOP-0.0A, Reactor Trip or Safety Injection?

A. Since all PC-11, Digital Radiation Monitoring System Radiation Monitors are GREEN; continue in EOP-0.0A, Reactor Trip or Safety Injection.

B. Wait until a Steam Generator sample from Chemistry confirms a tube leak. Until then, continue in EOP-0.0A, Reactor Trip or Safety Injection.

C. Recognize Steam Generator #4 level is increasing in an uncontrolled manner and transition to EOP-3.0A, Steam Generator Tube Rupture.

D. Monitor Main Steam Line N16 Radiation Monitors and if an increase is seen, transition to EOP-3.0A, Steam Generator Tube Rupture.

Proposed Answer: C

Explanation:

A. Incorrect. Plausible because PC-11 indications are GREEN, however, with Steam Generator level rising a transition to EOP-3.0A is required.

B. Incorrect. Plausible because this action would be performed during a Steam Generator tube leak, however, other indications are used to verify a tube rupture.

C. Correct. Even with no confirming Radiation Monitor alarms EOP-0.0A requires that if any Steam Generator level is increasing in an uncontrolled manner then EOP-3.0A, SGTR entry is required.

D. Incorrect. Plausible because the N16 Radiation Monitors are designed to detect Steam Generator tube leaks during operation, however, in a post-trip condition these instruments are no longer useful due to loss of N16 production. See EOP-0.0A, Step 13, Basis reference.

Technical Reference(s) EOP-0.0A, Step 13
EOP-0.0A, Step 13, Bases
Attached w/ Revision # See Comments / Reference

Proposed references to be provided during examination: None

Learning Objective: OPD1.EO0.XG2.OB18
Given specific system parameters and/or monitoring equipment conditions, **ANALYZE** and **DETERMINE** a Reactor Trip or Safety Injection condition and its likely cause(s) in accordance with EOP-0.0A/B.

Question Source:
Bank # SJ1.XG1.OB107-2
Modified Bank # _____ (Note changes or attach parent)
New _____

Question History: Last NRC Exam _____

Question Cognitive Level:
Memory or Fundamental Knowledge _____
Comprehension or Analysis X

10 CFR Part 55 Content:
55.41 10
55.43 _____

Comments / Reference: From EOP-0.0A, Step 13	Revision # 8

CPSES EMERGENCY RESPONSE GUIDELINES	UNIT 1	PROCEDURE NO. EOP-0.0A
REACTOR TRIP OR SAFETY INJECTION	REVISION NO. 8	PAGE 11 OF 111

STEP	ACTION/EXPECTED RESPONSE	RESPONSE NOT OBTAINED
13	Check If SG Tubes Are Not Ruptured: • Condenser off gas radiation - NORMAL (COG-182, 1RE-2959) • Main steamline radiation - NORMAL (MSL-178 through 181, 1RE-2325 through 2328) • SG blowdown sample radiation monitor - NORMAL (SGS-164, 1RE-4200) • No Steam Generator level increasing in an uncontrolled manner	Go to EOP-3.0A, STEAM GENERATOR TUBE RUPTURE, Step 1.

Comments / Reference: From EOP-0.0A, Attachment 10, Step 13, Bases	Revision # 8

CPSES EMERGENCY RESPONSE GUIDELINES	UNIT 1	PROCEDURE NO. EOP-0.0A
REACTOR TRIP OR SAFETY INJECTION	REVISION NO. 8	PAGE 90 OF 111

ATTACHMENT 10
PAGE 11 OF 32

BASES

STEP 13: Abnormal condenser off gas, main steamline,or SG blowdown sample radiation indicates primary to secondary leakage. "Normal" means the value of a process parameter experienced during routine plant operations. Trending of secondary radiation monitors ensures that any changes in secondary radiation levels can be compared to previous plant conditions. This will aid in primary to secondary leak determination.

In addition, an uncontrolled steam generator level increase is indicative of secondary leakage. "Uncontrolled" means not under the control of the operator and incapable of being controlled by the operator using available equipment.

Steam Generator Leak Rate Monitors are installed upstream of the MSIVs and are provided to detect a slow-propagating SG tube leak during unit operation. The SG Leak Rate Monitors detect N-16 gammas to provide a correlation of primary to secondary leakage. The N-16 gamma monitored by the SG Leak Rate Monitors will no longer exist following a reactor trip even though primary to secondary leakage will continue. The Leak Rate Monitor trends may be used to confirm a steam generator tube rupture, but the parameter is not listed as a main indication since the reading will cease following a reactor trip.

Optimal recovery in dealing with a steam generator tube rupture is provided in EOP-3.0A, STEAM GENERATOR TUBE RUPTURE.

Examination Outline Cross-reference:	Level	RO	SRO
	Tier #	1	
	Group #	1	
	K/A #	W/E 05 EA2.2	
	Importance Rating	3.7	

Inadequate Heat Transfer - Loss of Secondary Heat Sink: Ability to determine and interpret the following as they apply to the Loss of Secondary Heat Sink: Adherence to appropriate procedures and operation within the limitations in the facility's license and amendments

Proposed Question: Common 45

Given the following condition:

- Unit 1 is addressing a Loss of Secondary Heat Sink and just secured the Reactor Coolant Pumps as directed by FRH-0.1A, Response to Loss of Secondary Heat Sink.

Which ONE (1) of the following is a correct statement for conditions observed after securing the Reactor Coolant Pumps?

Reactor Coolant System...

A. pressure rising slowly and loop differential temperature rising is an indication of a loss of the secondary heat sink.

B. temperature falling slowly and loop differential temperature rising is an indication of natural circulation established.

C. temperature falling slowly and loop differential temperature very small and not changing is an indication of natural circulation established.

D. pressure rising slowly and loop differential temperature very small and not changing is an indication of a loss of the secondary heat sink.

Proposed Answer: D

Explanation:

A. Incorrect. Plausible because RCS pressure rising slowly is an indication of a loss of secondary heat sink, however, loop differential temperature will remain very small because the Steam Generators are not removing heat.
B. Incorrect. Plausible because loop differential temperature rising is an indication of natural circulation developing, however, RCS temperature and pressure will rise initially.
C. Incorrect. Plausible because one would expect temperature to fall once natural circulation was developed, however, loop differential temperature must increase to develop the NC driving head.
D. Correct. RCS pressure rising slowly and loop differential temperature very small and not changing is an indication of a loss of the secondary heat sink.

Technical Reference(s) FRH-0.1A, Attachment 4, Step 3 Bases Attached w/ Revision # See Comments / Reference

Proposed references to be provided during examination: None

Learning Objective: OP51.SYS.RC1.OB11

STATE the physical connections and **EVALUATE** the cause-effect relationship between the Reactor Coolant System and the following systems, components or events:

- Reactor Coolant Pumps
- Steam Generators

Question Source:

Bank #		
Modified Bank #		(Note changes or attach parent)
New	X	

Question History: Last NRC Exam

Question Cognitive Level:

Memory or Fundamental Knowledge	
Comprehension or Analysis	X

10 CFR Part 55 Content:

55.41	10
55.43	

Comments / Reference: From FRH-0.1A, Attachment 4, Step 3 Bases	Revision # 8

CPSES EMERGENCY RESPONSE GUIDELINES	UNIT 1	PROCEDURE NO. FRH-0.1A
RESPONSE TO LOSS OF SECONDARY HEAT SINK	REVISION NO. 8	PAGE 37 OF 59

ATTACHMENT 4
PAGE 3 OF 25

BASES

When the RCPs are stopped due to loss of heat sink, RCS pressure and temperature are expected to increase slightly and stabilize below the PRZR PORV setpoint. RCS pressure and temperature will continue to be relatively constant until SG dryout occurs (approximately 20 - 30 minutes). At this point, the primary-to-secondary heat transfer rate degrades and the RCS begins to heat up and repressurize and will eventually result in the opening of the PRZR PORVs.

This should not be confused with the onset of natural circulation in which the RCS pressure continues to increase after the RCPs are stopped and may reach the PRZR PORV setpoint. The key to determining if the RCS pressure rise is due to loss of heat sink or natural circulation is the loop temperature differential. The loop temperature differential is expected to be large for natural circulation and small for a loss of heat sink since there is no heat transfer to the secondary.

Therefore, verifying a slowly increasing RCS pressure and temperature trend plus a large loop temperature differential prior to the PORV opening confirms natural circulation whereas a relatively stable temperature and pressure and a small loop temperature differential combined with SG wide range low level prior to the PORV opening confirms a loss of heat sink.

This is a Continuous Action Step.

Examination Outline Cross-reference:	Level	RO	SRO
	Tier #	1	
	Group #	1	
	K/A #	077 AA1.03	
	Importance Rating	3.8	

Generator Voltage and Electric Grid Disturbances: Ability to operate and/or monitor the following as they apply to the Generator Voltage and Electric Grid Disturbances: Voltage regulator controls

Proposed Question: Common 46

Given the following condition:

- The Main Generator is paralleled to the grid with the Voltage Regulator in AUTOMATIC and sending 100 MVAR out.

Which ONE (1) of the following would occur if the operator lowers the VOLTAGE TARGET on the Turbine Generator display?

Main Generator...

A. megawatts would decrease.

B. reactive load would decrease.

C. power factor would decrease.

D. apparent power would remain the same.

Proposed Answer: B

Explanation:

A. Incorrect. Plausible if thought that lowering voltage would lower load, however, this does not occur.
B. Correct. Lowering the VOLTAGE TARGET causes Main Generator terminal voltage to decrease which results in a decrease in reactive load (i.e., less megavars). In this condition apparent power would decrease, true power would remain the same and power factor would increase.
C. Incorrect. Plausible because power factor = true power/apparent power, however, this is the opposite of what occurs based on conditions in the Stem. Because load is being held constant and Generator voltage is decreasing the power factor would approach unity (1.0) and therefore be seen as an increase in power factor.
D. Incorrect. Plausible because this would be correct for true power because it is not changing, however, apparent power is approaching true power because the power factor is approaching unity (1.0) conditions.

Technical Reference(s) OP51.SYS.MG1.LN, Page 87
SOP-405A, Step 5.3.2
TDM-401A, Generator Capability Curve

Attached w/ Revision # See Comments / Reference

Proposed references to be provided during examination: TDM-401A, Generator Capability Curve

Learning Objective:
OP51.SYS.MG1.OB45 **COMPARE** and **CONTRAST** real and reactive load and their significance in relation to power factor.

OP51.SYS.MG1.OB46 **EXPLAIN** the automatic and manual operation of the Generator Voltage Regulator.

Question Source: Bank # SYS.MG1.OB45-1
Modified Bank # _____ (Note changes or attach parent)
New _____

Question History: Last NRC Exam _____

Question Cognitive Level: Memory or Fundamental Knowledge _____
Comprehension or Analysis X

10 CFR Part 55 Content: 55.41 10
55.43 _____

Comments / Reference: From OP51.SYS.MG1.LN, Page 87	Revision # 01/08/04

Generator Operation

Ensure the generator is operated within the Generator capability curve and the Generator "V" Curve of TDM-401A (B) (**Figures 32 and 33**).

REACTIVE CAPABILITY CURVE

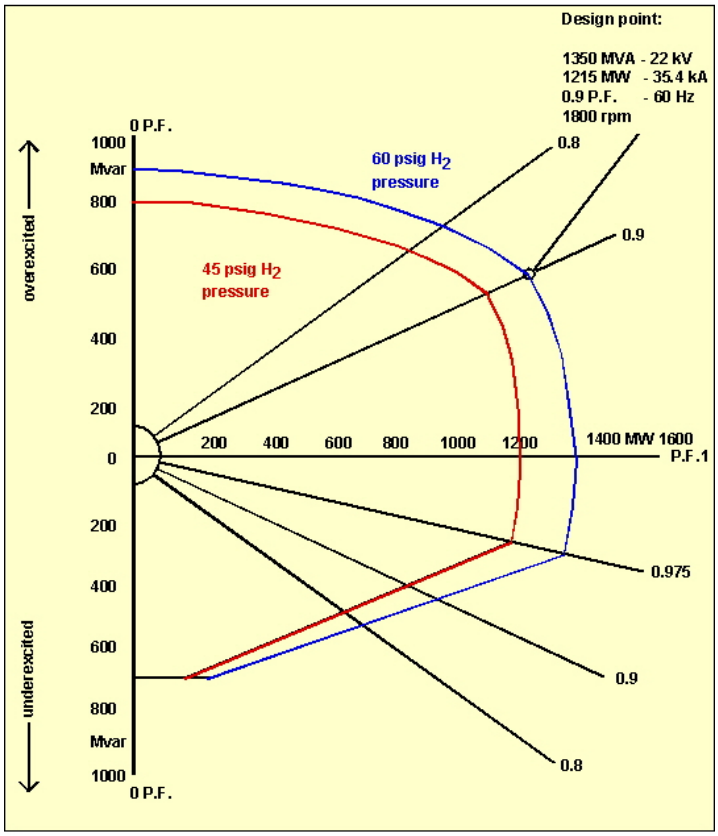

OP51.SYS.MG1.FG 32 1-8-04

Comments / Reference: From SOP-405A, Step 5.3.2	Revision # 10

CPSES SYSTEM OPERATING PROCEDURE MANUAL	UNIT 1	PROCEDURE NO. SOP-405A
MAIN GENERATOR SYSTEM	REVISION NO. 10	PAGE 16 OF 34

CAUTION: The manual control device is provided for emergency operation or failure of the Automatic Voltage Regulator. This mode of operation, especially during startup after Automatic Voltage Regulator failure, is recommended only in cases of urgent need, and requires dedicated operator attention. Supervisory approval should be obtained prior to operating in this mode.

5.3.2 Shifting the Voltage Regulator from Auto to Manual

This section describes the steps necessary to change over the Voltage Regulating System from automatic control to manual control.

"TG Control" Display

☐ A. In the "Voltage Control" Section, Ensure the Auto/Man Subloop Controller is in Auto (Red).

NOTE: The Exciter Current Target Setpoint in the "Voltage Control" Section should track with Main Generator Current.

☐ B. In the "Voltage Control" Section, Ensure the Exciter Current Target Setpoint Controller is set at current Main Generator Current.

NOTE: When running in Manual, the "Generator Capability" display should be monitored. Load and MVARS may need to be adjusted to maintain the Generator voltage during Grid Voltage changes, or a rise in Voltage/MVARS on a required Load Rejection. While in Manual, the Voltage Regulator will maintain field current at setpoint. Any changes on the Grid or Generator Load would require corrections to the Generator Voltage.

☐ C. In the "Voltage Control" Section, Place the Auto/Man Subloop Controller in Manual (Green). (Alarm 1SP10C102 XG02 Manual Voltage Control will come in)

☐ D. IF the Main Generator is synchronized to the Grid, THEN refer to TDM-401A and/or the "Gen Capability Curve" Display, for Generator limits, AND incrementally adjust Generator load and voltage, as necessary.

Comments / Reference: From TDM-401A, Generator Capability Curve	Revision # 5

CPSES TECHNICAL DATA MANUAL	UNIT 1	PROCEDURE NO. TDM-401A
TURBINE/GENERATOR LIMIT CURVES	REVISION NO. 5	PAGE 5 OF 10

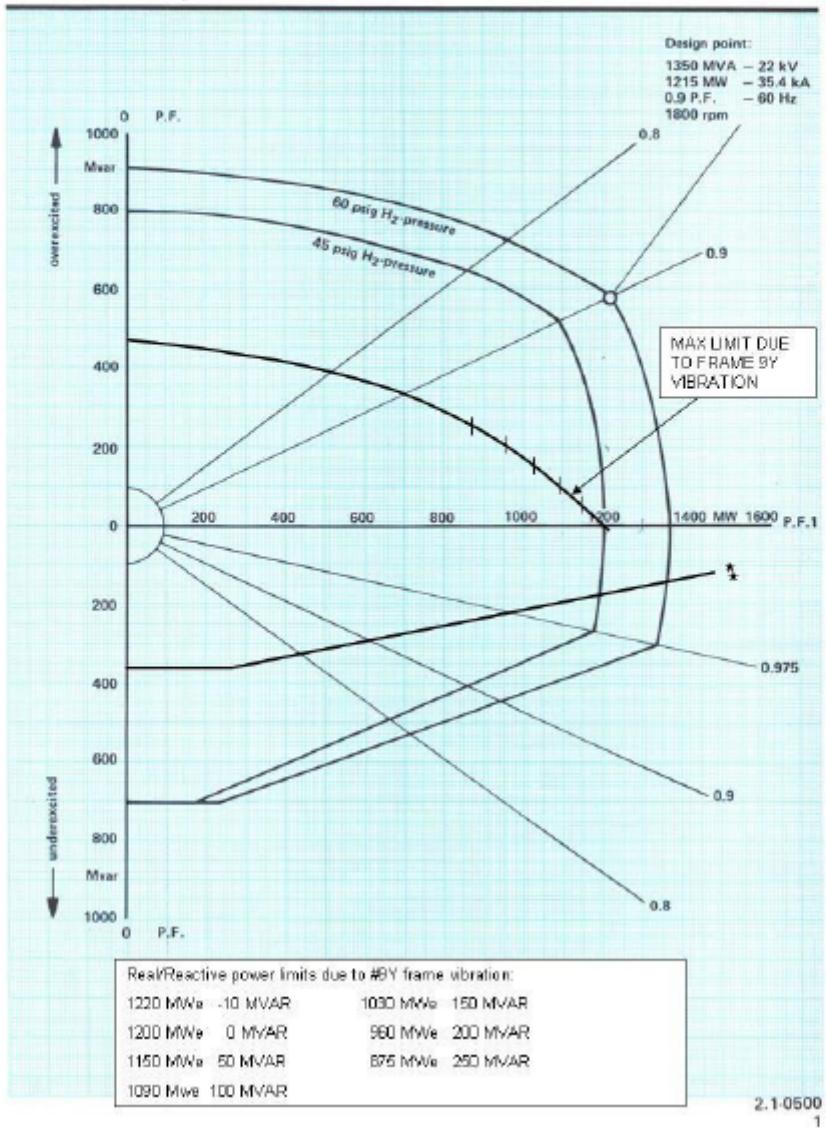

Examination Outline Cross-reference:	Level	RO	SRO
	Tier #	1	
	Group #	1	
	K/A #	026 AK3.03	
	Importance Rating	4.0	

Loss of Component Cooling Water: Knowledge of the reasons for the following responses as they apply to the Loss of Component Cooling Water: Guidance actions contained in EOP for Loss of CCW

Proposed Question: Common 47

Given the following condition:

- Unit 2 is at 100% power.

Which ONE (1) of the following actions are required if all Component Cooling Water flow is lost and attempts to start any available Component Cooling Water Pump fail per ABN-502, Loss of Component Cooling Water?

A. Trip the Reactor and then trip all Reactor Coolant Pumps.

B. Isolate heat loads to minimize CCW Heat Exchanger outlet temperature.

C. Verify adequate seal injection flow to the Reactor Coolant Pumps.

D. Verify Station Service Water flow in at least one Train.

Proposed Answer: A

Explanation:

A. Correct. This is the required action per Section 6.0 of ABN-502.
B. Incorrect. Plausible because this action would be performed if CCW Heat Exchanger flow were low, however, not for the conditions listed.
C. Incorrect. Plausible because this action is performed for loss of CCW flow to the Non-Safeguards Loop, however, a total loss of CCW flow requires a Reactor trip.
D. Incorrect. Plausible because this action is performed for a single CCW Pump trip, however, not for a loss of both CCW Pumps.

Technical Reference(s)		
	ABN-502, Step 6.3.1	Attached w/ Revision # See Comments / Reference
	ABN-502, Step 2.3.2 & 2.3.4	
	ABN-502, Step 5.3.5	

Proposed references to be provided during examination: None

Learning Objective: OP51.SYS.CC1.OB21

ANALYZE the indications and **DESCRIBE** the mitigation strategy for the following procedures as they affect the Component Cooling Water system:

- ABN-502, Component Cooling Water System Malfunctions

Question Source: Bank # S01.NC1.OB103-4
Modified Bank # _____ (Note changes or attach parent)
New _____

Question History: Last NRC Exam _____

Question Cognitive Level: Memory or Fundamental Knowledge X
Comprehension or Analysis _____

10 CFR Part 55 Content: 55.41 10
55.43 _____

Comments / Reference: From ABN-502, Step 6.3.1 | Revision # 6

CPSES ABNORMAL CONDITIONS PROCEDURES MANUAL	UNIT 1 AND 2	PROCEDURE NO. ABN-502
COMPONENT COOLING WATER SYSTEM MALFUNCTIONS	REVISION NO. 6	PAGE 35 OF 75

6.3 Operator Actions

ACTION/EXPECTED RESPONSE	RESPONSE NOT OBTAINED

NOTE: Placing the CCW Pump handswitch in STOP when a white trip light is lit will reset the 86M relay and result in an automatic start of the pump.

☐ 1	Verify at least one CCW Pump - RUNNING.	Perform the following: a. Place tripped CCW Pump handswitch to STOP. b. Start any available CCW Pump. c. IF a CCW Pump can NOT be started, THEN trip the Reactor AND GO TO EOP-0.0A/B while other qualified operators continue with this procedure. d. Trip ALL RCPs. e. GO TO Step 4.

Comments / Reference: From ABN-502, Step 2.3.2 & 2.3.4	Revision # 6

CPSES ABNORMAL CONDITIONS PROCEDURES MANUAL	UNIT 1 AND 2	PROCEDURE NO. ABN-502
COMPONENT COOLING WATER SYSTEM MALFUNCTIONS	REVISION NO. 6	PAGE 4 OF 75

2.3 Operator Actions

		ACTION/EXPECTED RESPONSE	RESPONSE NOT OBTAINED
☐	1	Verify unaffected train CCW Pump - RUNNING	Manually start the CCW Pump in the unaffected train. IF the pump fails to start, THEN GO TO Section 6.0 of this procedure.
☐	2	Verify unaffected train SSW Pump - RUNNING	Manually start the SSW Pump in the unaffected train.
☐	3	Verify unaffected train Safety Chiller Recirc Pump - RUNNING	Manually start the unaffected Safety Chiller Recirc Pump.
☐	4	Verify CCW heat exchanger outlet flow - LESS THAN 17,500 gpm per HEAT EXCHANGER. • u-FI-4536A, CCW HX 1 OUT FLO • u-FI-4537A, CCW HX 2 OUT FLO	Manually reduce CCW flow as follows: a. Isolate non-essential loads OR transfer CCW supply to common loads to the unaffected Unit. b. Throttle HX return valve(s): • u-HS-4572, RHR HX 1 CCW RET VLV • u-HS-4573, RHR HX 2 CCW RET VLV • u-HS-4574, CS HX 1 CCW RET VLV • u-HS-4575, CS HX 2 CCW RET VLV c. IF SFP HX aligned to affected unit, THEN throttle CCW SFP HX return: • XCC-0058, SFP HX X-01 CCW RET ISOL VLV (FB 810 Rm X-249B) • XCC-0067, SFP HX X-02 CCW RET ISOL VLV (FB 810 Rm X-249B)

Comments / Reference: From ABN-502, Step 5.3.5	Revision # 6

CPSES ABNORMAL CONDITIONS PROCEDURES MANUAL	UNIT 1 AND 2	PROCEDURE NO. ABN-502
COMPONENT COOLING WATER SYSTEM MALFUNCTIONS	REVISION NO. 6	PAGE 32 OF 75

5.3 Operator Actions

ACTION/EXPECTED RESPONSE	RESPONSE NOT OBTAINED
5 Isolate Charging Flow:	
☐ a. Place u-FK-121, CCP CHRG FLO CTRL in - MANUAL:	
☐ b. Slowly decrease charging flow to 32 gpm while maintaining between 6 and 13 gpm seal injection flow to each RCP by throttling u-HC-182, RCP SEAL WTR PRESS CTRL, closed.	b. IF seal injection flow to each RCP can NOT be maintained greater than 6 gpm, THEN perform ABN-101 while continuing with this procedure at Step 6.

Examination Outline Cross-reference:

Level	RO	SRO
Tier #	1	
Group #	1	
K/A #	027 AK3.04	
Importance Rating	2.8	

Pressurizer Pressure Control System Malfunction: Knowledge of the reasons for the following responses as they apply to the Pressurizer Pressure Control Malfunction: Why, if pressurizer level is lost and then restored, that pressure recovers much more slowly

Proposed Question: Common 48

Given the following conditions:

- Unit 1 has just recovered from a high failure of the Pressurizer level controlling channel.
- Pressurizer level dropped to 20% during the transient and has been returned to program.
- Pressurizer pressure is recovering but is still low.

Which ONE (1) of the following is the primary reason that Pressurizer pressure recovery lags the level recovery?

A. The insurge of colder water must be heated to the saturation temperature for 2235 psig.

B. The heat lost due to vaporization on the outsurge from the Pressurizer was greater than the heat of compression gained on the in-surge.

C. Pressurizer heaters were lost on the initial Pressurizer level instrument failure and were recovered after swapping to an OPERABLE channel.

D. Loss of Pressurizer metal temperature on the outsurge is inhibiting achieving saturation temperature for 2235 psig.

Proposed Answer: A

Explanation:

A. Correct. Despite coming from the hot leg the insurge of the water into the Pressurizer is lower then that for saturation temperature.
B. Incorrect. Plausible because there are losses and gains due to these conditions but are minimal compared to the colder water.
C. Incorrect. Plausible because heaters can trip on low Pressurizer level but level did not fall below 17% and the heater cutout comes off the selected channel which failed high.
D. Incorrect. Plausible because metal temperature will have dropped a little but is very small compared to the change in the water temperature on the insurge.

Technical Reference(s) ABN-706, Section 2.2
OP.SYS.RC1.LN, Pages 24, 25, 50 & 51

Attached w/ Revision # See Comments / Reference

Proposed references to be provided during examination: None

Learning Objective: OP51.SYS.PP1.OB08

DESCRIBE or **STATE** how the following concepts or conditions apply to the Pressurizer Pressure and Level Control System:

- Reason for slower pressure recovery if PRZR level was lost and then restored

Question Source:

Bank #		
Modified Bank #		(Note changes or attach parent)
New	X	

Question History: Last NRC Exam

Question Cognitive Level:

Memory or Fundamental Knowledge	
Comprehension or Analysis	X

10 CFR Part 55 Content:

55.41	5
55.43	

Comments / Reference: From ABN-706, Section 2.2	Revision # 7

CPSES ABNORMAL CONDITIONS PROCEDURES MANUAL	UNIT 1 AND 2	PROCEDURE NO. ABN-706
PRESSURIZER LEVEL INSTRUMENTATION MALFUNCTION	REVISION NO. 7	PAGE 4 OF 13

2.2 Automatic Actions

NOTE: For the pressurizer level and high level heater control circuits:

- CH I 0459 is the normal input.
- CH III 0461 is the alternate input.
- CH II 0460 has no input.

For the low level heater cutoff and letdown isolation circuits:

- CH I 0459 is the normal input to 1/u-LCV-459.
- CH II 0460 is the normal input to 1/u-LCV-460.
- CH III 0461 is the alternate input to 1/u-LCV-459 or 1/u-LCV-460.

a. Control response for a selected pressurizer level channel failure high.

1) Charging flow is reduced, lowering actual pressurizer level until at 17% level, low level heater block and letdown isolation occur.

2) Backup heaters come on if pressurizer level channel selected for control increases greater than or equal to 5% from programmed level (either directly due to failure or due to actual level increase).

- u-LR-459, PRZR LVL/PRZR LVL SETPT

b. Control and interlock responses for a selected pressurizer level channel failure low.

1) Charging flow is increased, raising pressurizer level.

2) Low level heater block and letdown isolation occur if channel fails to less than or equal to 17% pressurizer level.

Comments / Reference: From OP.SYS.RC1.LN, Pages 24 & 25	Revision # 12/12/05

Pressurizer

The pressurizer vessel is a large steel chamber filled with saturated water and steam, which maintains the Reactor Coolant System pressure at 2235 psig. Constructed of manganese-molybdenum steel with an austenitic stainless steel cladding, the vessel is comprised of three welded together sections, the upper head, shell assembly, and lower head (see Figure 16). Hemispherical in shape, the upper head contains ports for the relief nozzle, three safety nozzles, the spray nozzle, and a manway. The shell assembly is a cylindrical barrel. Also hemispherical in shape, the lower head contains penetrations for the surge nozzle, and 78 electric immersion heaters.

The spray line enters the top of the pressurizer upper head and terminates at the spray nozzle inside the vessel. The spray line connection is equipped with a thermal sleeve, minimizing stresses due to changes in spray water temperature. A locking bar, welded to the spray nozzle and the upper head, prevents the spray nozzle from becoming loose or detached due to vibration. A 16-inch manway provides access for inspection of pressurizer internals.

A 14-inch diameter surge line connects the lower head to RCS loop 4 near the reactor vessel hot leg nozzle. Inside the pressurizer at the surge line connection, a retaining basket prevents entrance of foreign material into the RCS. A thermal sleeve on the pressurizer surge line minimizes thermal stresses due to the rapid temperature changes that accompany volume surges. There are additional penetrations in the pressurizer for instrumentation and sampling. Eight nozzles provide connections for level and temperature instrumentation. One nozzle provides a pressurizer liquid space sampling connection.

Plant load changes produce RCS temperature changes, which, in turn, produce RCS volumetric changes. Pressurizer design accounts for these volume changes, limiting corresponding pressure variations prior to reactor control and protection systems response. The pressurizer surge line is the conduit for transmission of any change in RCS volume whether it is attributable to an increase or a decrease in RCS temperature.

During volume outsurges, which decrease pressure, flashing of saturated water in the pressurizer and generation of steam by the electrical pressurizer heaters maintains RCS pressure. During volume insurges, which increase pressure, the spray system sprays subcooled water into the pressurizer steam space to lower the pressure by condensing steam. Volumetric insurges beyond the pressure limiting capacity of the pressurizer spray system is handled by two power-operated relief valves (PORVs) and three self actuated safety valves.

Comments / Reference: From OP.SYS.RC1.LN, Pages 50 & 51	Revision # 12/12/05

Comanche Peak Unit 1, LER 90-022

During MODE 3 operations in 1990, spurious SI actuations occurred that resulted in SI flow into the RCS. During the recovery operation while regaining pressurizer level, the Technical Specification for Pressurizer heatup limits was exceeded. The cause of the heatup was the fact that liquid stratification existed from the insurge of colder water from the RCS into the pressurizer. The colder water stratified and was above the liquid space temperature detector of the pressurizer. Upon restoration of pressurizer level, the colder water level dropped below the liquid space temperature detector and a temperature change of greater than 100°F/hr was experienced.

Examination Outline Cross-reference:

Level	RO	SRO
Tier #	1	
Group #	1	
K/A #	009 EK1.01	
Importance Rating	4.2	

Small Break LOCA: Knowledge of the operational implications of the following concepts as they apply to the small break LOCA: Natural circulation and cooling, including reflux boiling

Proposed Question: Common 49

Given the following conditions during a Small Break Loss of Coolant Accident:

- Reactor Coolant Pumps are not available due to a Loss of Offsite Power.
- Break flow is greater than injection flow and RCS inventory is lowering.

Which ONE (1) of the following describes how reflux cooling removes heat from the core?

A. Boiling core water with steam flowing out the break to the sump for recirculation back to the Hot and Cold Legs.

B. Vapor bubbles formed in the core and condensing in the Steam Generator flow back to the core through the Cold Legs.

C. Vapor bubbles formed in the core and condensing in the head area flow back into the core.

D. Boiling core water and condensing steam in the Steam Generator flow back to the core through the Hot Legs.

Proposed Answer: D

Explanation:

A. Incorrect. Plausible because this describes the core cooling mechanism for a large break LOCA, however, reflux cooling is via the Steam Generators.
B. Incorrect. Plausible because reflux cooling is occurring, however, Reactor Coolant flow is returned via the Hot Legs.
C. Incorrect. Plausible because in some circumstances this action is effective in keeping the core covered; however, it does not describe reflux cooling.
D. Correct. This describes the heat removal mechanism of reflux cooling.

Technical Reference(s) LO21.MCO.TAA.LN, Page 14 Attached w/ Revision # See Comments / Reference

Proposed references to be provided during examination: Steam Tables

Learning Objective: OPD.EO1.XG3.408 — Given plant/system conditions indicating a Loss of Reactor Coolant event (LOCA) has occurred, **RECOGNIZE**, **DETERMINE** and **EVALUATE** parameters, and **DISCUSS** operator actions to respond to the event in accordance with EOP-1.0A/B.

LO21.MC0.TAA.OB06 — **LIST** the three (3) requirements necessary for effective natural circulation.

LO21.MC0.TAA.OB07 — **DESCRIBE** the heat removal process referred to as reflux boiling.

Question Source:
- Bank # MCO.TAA.OB107-2
- Modified Bank # _____ (Note changes or attach parent)
- New _____

Question History: Last NRC Exam _____

Question Cognitive Level:
- Memory or Fundamental Knowledge _____
- Comprehension or Analysis X

10 CFR Part 55 Content:
- 55.41 5, 10
- 55.43 _____

Comments / Reference: From LO21.MCO.TAA.LN, Page 14	Revision # 01/03/02

MODE 4 - Decay Heat Removal by Core Boiling (Figures 10 and 11).

1. The reactor vessel level continues to decrease due to fluid loss through the break.
2. Boiling takes place in the core. The boiling removes energy from the core and transports it to the steam bubble above the core.
3. Any liquid that is produced from condensation inside the SG tubes returns to the core via gravity counter flow along the bottom of each partially filled hot leg pipe. This phenomenon is called reflux flow. The cold leg side of the U-tubes is draining to the loop seal.
4. Eventually, the decay heat level drops to the point where the SG safety valves are no longer needed as a heat sink. The exact point in time at which this occurs is dependent upon the decay heat level and the break size. The larger the break, the sooner this event will happen. As soon as the SG saturation pressure drops below the safety valve setpoint, the safety valves shut. Decay heat is then removed only by heat loss through the break and by heat loss to the environment.
5. Plant pressure is now controlled solely by the steam bubble above the core. As the decay heat level drops without a corresponding drop in heat removal, the system temperature decreases.
6. As system pressure drops, the driving force for flow out of the break decreases. At the same time, the lower system pressure allows injection flow to increase. This occurs when decay heat level falls to within the capabilities of the ECCS.

Examination Outline Cross-reference:

Level	RO	SRO
Tier #	1	
Group #	1	
K/A #	008 AK1.02	
Importance Rating	3.1	

Pressurizer Vapor Space Accident: Knowledge of the operational implications of the following concepts as they apply to the Pressurizer Vapor Space Accident: Change in the leak rate with change in pressure

Proposed Question: Common 50

Given the following conditions with Unit 1 Reactor tripped from full power:

- One (1) Pressurizer PORV has stuck open resulting in a Safety Injection actuation.
- All attempts to close the PORV and PORV Block Valve have failed.
- While monitoring wide range Reactor Coolant System pressure, the following was observed:
  - The rate of pressure decrease slowed over a 10 minute period and then suddenly increased and remains constant.

Which ONE (1) of the following is the reason for the Reactor Coolant System pressure response?

A. Pressurizer PORV momentarily closed due to low pressure then reopened.

B. Reactor Coolant System pressure decreased, Safety Injection flow remained constant but now exceeds break flow.

C. Pressure in the Pressurizer Relief Tank increased until the rupture disc failed allowing break flow to increase.

D. Containment cooling caused Containment pressure to decrease allowing break flow to increase.

Proposed Answer: C

Explanation:

A. Incorrect. Plausible if thought that the design of the PORV was similar to that of the Pressurizer Safety Valve which is a self-actuated, spring-loaded valve. Because of Pressurizer Safety Valve design, one might expect a decrease in flow as pressure lowered; however, the PORVs are either open or closed.

B. Incorrect. Plausible because pressure should have decreased over 30 minutes, however, at this point the PORV would be seeing water vice steam flow and flow through the PORV would be choked resulting in a lower Safety Injection flow rate.

C. Correct. Break flow will slow as pressure in the PRT increases until the ruptured disc setpoint of 100 psig is reached. Once the ruptured, tailpipe back pressure will lower to containment pressure and an increase in break flow will be realized.

D. Incorrect. Plausible because some ambient losses might be experienced, however, the increasing flow rate is due to blowing the ruptured disc.

Technical Reference(s) OP51.SYS.RC1.LN, Pages 26 to 28 Attached w/ Revision # See Comments / Reference

Proposed references to be provided during examination: None

Learning Objective: OP51.SYS.RC1.OB11 **STATE** the physical connections and **EVALUATE** the cause-effect relationship between the Reactor Coolant System and the following systems, components or events:

- Pressurizer Relief Tank

Question Source: Bank # SYS.RC1.OB11-6
Modified Bank # _____ (Note changes or attach parent)
New _____

Question History: Last NRC Exam _____

Question Cognitive Level: Memory or Fundamental Knowledge _____
Comprehension or Analysis X

10 CFR Part 55 Content: 55.41 3, 5
55.43 _____

Comments / Reference: From OP51.SYS.RC1.LN, Page 28	Revision # 12/12/05

Pressurizer Relief Tank

The Pressurizer Relief Tank (PRT) is an 1800 ft^3 stainless steel tank, located in its own room, on the 820' elevation of containment. It condenses and cools the discharge from the pressurizer safety and relief valves (see Figure 17). Other relief valves located inside the Containment Building also discharge to the PRT. It is normally filled to between 64% and 88%, with reactor makeup water, and has a 1 psig to 7 psig nitrogen blanketed atmosphere. Maintaining water temperature below 113°F preserves PRT design capabilities.

Steam discharges into the PRT through a sparger pipe beneath the water level, which condenses the steam. A vent hole in the sparger line prevents siphoning water back through this line. The PRT is also equipped with an internal spray and a drain line, used to cool the tank after a discharge. A sample

line permits periodic gas sampling of the PRT to check for hydrogen and/or oxygen accumulation. Two rupture disks prevent the PRT from exceeding a design pressure of 100 psig. They will rupture at approximately 91 psig, discharging directly into containment.

Comments / Reference: From OP51.SYS.RC1.LN, Pages 26 & 27	Revision # 12/12/05

Power Operated Relief Valves

Two 3-inch power operated relief valves (PORVs), u-PCV-0455A and 0456, relieve steam from the top of the pressurizer at a nominal set point of 2335 psig. Each PORV has a 210,000 lbm/hr relief capacity. They are operated by pneumatic actuators, powered from compressed nitrogen, and will fail closed upon a loss of nitrogen or power. Although connected to the pressurizer by a single 6" pipe, the PORVs have a parallel arrangement. They discharge into a common line routed to the Pressurizer Relief Tank (PRT). A strap-on temperature element, on the common discharge line, provides indication at CB05 to identify an open or leaking PORV.

PORVs design maintains RCS pressure below the high-pressure reactor trip set point during a design step-load decrease of 50% with rod control and steam dumps operating. They also minimize challenges to the pressurizer safety valves and provide a means for low temperature overpressure protection (LTOP). Some emergency recovery procedures require using them to depressurize the RCS when RCPs are not running to provide spray flow.

A nitrogen accumulator, pressurized to 100 psig, provides motive force for each PORV. The accumulators are located one on top of the other in the Containment Building at 905' elevation. With the nitrogen provided by the accumulators (196 ft^3 each), PORVs may be cycled 100 times over a 10 minute period. The high-pressure nitrogen header charges the accumulators via a 100-psig regulator.

Normally open motor-operated block valves are located upstream of each PORV. These valves remotely isolate PORVs from the pressurizer in case they stick open or leak excessively. Two 2-position (CLOSE-OPEN) handswitches on CB05 provide control and indication for the block valves. Safeguards motor control centers, with backup power from emergency diesel generators, power the PORV block valve motors.

Comments / Reference: From OP51.SYS.RC1.LN, Page 27	Revision # 12/12/05

Safety Valves

Three 6-inch self-actuated safety valves, each with a 420,000 lbm/hr relief capacity, ensure maximum RCS pressure will never exceed design limits. In compliance with federal and ASME codes, their sole purpose is to provide RCS overpressure protection. Their lifting set point is the RCS design pressure of 2485 psig with a 3% accumulation (fully open at 2575 psia). The designed combined relieving capacity, of the three safety valves, provides for the maximum surge rate resulting from a complete loss of steam flow to the main turbine, without a reactor trip, automatic control response (automatic rod control, condenser steam dumps, pressurizer PORVs) or operator action. Under these design transient conditions, the safety valves limit peak RCS pressure to less than 110% of design pressure

Examination Outline Cross-reference:	Level	RO	SRO
	Tier #	1	
	Group #	1	
	K/A #	054 G 2.4.11	
	Importance Rating	4.0	

Loss of Main Feedwater: Emergency Procedures/Plan: Knowledge of abnormal condition procedures

Proposed Question: Common 51

Given the following condition:

- Unit 2 is at a stable power of 70% when Main Feedwater Pump (MFWP) A trips.

Which ONE (1) of the following correctly describes the operator actions for this event per ABN-302, Feedwater, Condensate, Heater Drain System Malfunction?

A. Lower turbine load to less than 600 MWe to be within capacity of the running MFWP.

B. Ensure1/2-RBSS, CONTROL ROD BANK SELECT in AUTO with rods stepping in.

C. Open the Steam Dump Valves as required to maintain Reactor power stable at 70%.

D. Open 2-PV-2286, LP Feedwater Heater Bypass Valve to ensure adequate feed flow to the running MFWP.

Proposed Answer: B

Explanation:

A. Incorrect. Plausible because Turbine load must be reduced, however, a Main Feedwater Pump trip initiates an automatic Turbine Runback to 60% power (700 MWE).
B. Correct. This is the required Initial Operator Action per ABN-302.
C. Incorrect. Plausible if thought that maintaining Reactor power stable was a priority for this condition given that a Turbine Runback has occurred, however, it is insufficient feedwater flow that is the concern and power must be reduced.
D. Incorrect. Plausible because this valve opens as a result of low MFWP suction pressure, however, it is associated with a Condensate Pump trip vice a MFWP trip.

Technical Reference(s) ABN-302, Steps 2.3.1, 3.2.b, 2.2, & 2.1.b.4) Attached w/ Revision # See Comments / Reference

Proposed references to be provided during examination: None

Learning Objective: OP51.SYS.MF1.OB28

ANALYZE the indications and **DESCRIBE** the mitigation strategy and major steps taken relative to the Main Feedwater System, both initial and subsequent, for each of the following:

- ABN-302, Feedwater, Condensate, Heater Drain System Malfunction

Question Source: Bank # SYS.MF1.OB25-5
Modified Bank # _____ (Note changes or attach parent)
New _____

Question History: Last NRC Exam _____

Question Cognitive Level: Memory or Fundamental Knowledge _____
Comprehension or Analysis X

10 CFR Part 55 Content: 55.41 7, 10
55.43 _____

Comments / Reference: From ABN-302, Step 2.3.1 | Revision # 13

CPSES ABNORMAL CONDITIONS PROCEDURES MANUAL	UNIT 1 AND 2	PROCEDURE NO. ABN-302
FEEDWATER, CONDENSATE, HEATER DRAIN SYSTEM MALFUNCTION	REVISION NO. 13	PAGE 4 OF 77

2.3 Operator Actions

ACTION/EXPECTED RESPONSE	RESPONSE NOT OBTAINED

CAUTION:
- The status of the secondary heat sink and available feedwater must be closely monitored during the performance of this procedure. The Reactor should be manually tripped if secondary heat sink cannot be maintained.
- Using Load Target to reduce load without rods in AUTO can result in excessive TAVE-TREF mismatch before C-7 activates. This mismatch may cause an SI when steam dumps trip open.

NOTE:
- Diamond step 1 denotes Initial Operator Actions.
- Should a reactor trip occur at any time during performance of this procedure, immediately proceed to EOP-0.0A/B, Reactor Trip or Safety Injection.

☐ ◇1 Verify automatic plant response.
- Control Rods in - AUTO
- Turbine Runback - IN PROGRESS

IF Turbine Power is > approximately 700 MW, THEN perform the following:

a. Ensure 1/u-RBSS, CONTROL ROD BANK SELECT in AUTO.

b. Ensure Turbine runback to 700 MW initiated.

Comments / Reference: From ABN-302, Step 3.2.b	Revision # 13

CPSES ABNORMAL CONDITIONS PROCEDURES MANUAL	UNIT 1 AND 2	PROCEDURE NO. ABN-302
FEEDWATER, CONDENSATE, HEATER DRAIN SYSTEM MALFUNCTION	REVISION NO. 13	PAGE 10 OF 77

3.2 Automatic Actions

a. Turbine runback at 35% per minute to 60% power.

NOTE: Opening the LP FW HTR BYP VLV will reduce unit efficiency resulting in an increased mismatch between reactor and turbine power.

b. A low feedwater pump suction pressure (290 psig and greater than 15% turbine power) will open u-PV-2286 (to bypass the low pressure heater strings) and close the condensate reject and recirc valves (to provide maximum condensate pressure at the feedwater pump suction).

Comments / Reference: From ABN-302, Step 2.2 & 2.1.b.4)	Revision # 13

CPSES ABNORMAL CONDITIONS PROCEDURES MANUAL	UNIT 1 AND 2	PROCEDURE NO. ABN-302
FEEDWATER, CONDENSATE, HEATER DRAIN SYSTEM MALFUNCTION	REVISION NO. 13	PAGE 3 OF 77

2.0 FEEDWATER PUMP TRIP

2.1 Symptoms

a. Annunciator Alarms

- FWPT A TRIP (7B-1.12)
- FWPT B TRIP (8A-1.3)
- SG 1 STM & FW FLO MISMATCH (8A-1.8)
- SG 2 STM & FW FLO MISMATCH (8A-2.8)
- SG 3 STM & FW FLO MISMATCH (8A-3.8)
- SG 4 STM & FW FLO MISMATCH (8A-4.8)
- SG 1 LVL DEV (8A-1.12)
- SG 2 LVL DEV (8A-2.12)
- SG 3 LVL DEV (8A-3.12)
- SG 4 LVL DEV (8A-4.12)
- ANY TURB RUNBACK EFFECTIVE (6D-1.9)
- Various Digital Alarms (ASD)

b. Plant Indications

1) FWPT TRIP light - ON.
   - u-HS-2111, FWPT A TRIP
   - u-HS-2112, FWPT B TRIP

2) Observed decrease in feedwater pressure.
   - u-PI-508 FWP DISCH HDR PRESS

3) Turbine load decreasing in response to runback.
   - TURBINE PWR (%) u-JI-2345
   - TURB STRESS EVALUATOR (MW DECREASING)

4) Steam dump valve actuation in response to loss of load (C-7) signal and Tave-Tref mismatch (greater than 5°F).

5) Control rods stepping in (if in AUTO) in response to Tave-Tref mismatch
   - CONTROL ROD MOTION 1/u-RIL

2.2 Automatic Actions

- Turbine runback at 35% per minute to 60% power.

Examination Outline Cross-reference:	Level	RO	SRO
	Tier #	1	
	Group #	1	
	K/A #	W/E04 EK3.3	
	Importance Rating	3.8	

LOCA outside Containment: Knowledge of the reasons for the following responses as they apply to the LOCA Outside Containment: Manipulation of controls required to obtain desired operating results during abnormal, and emergency situations

Proposed Question: Common 52

Given the following Unit 1 conditions:

- Reactor trip and Safety Injection have occurred.
- The Safeguards Building has high radiation.
- All Containment parameters are normal.
- ECA-1.2A, LOCA Outside Containment has been entered.
- After closing 1/1-8835, Safety Injection to Cold Leg 1 to 4 Injection Isolation Valve, Reactor Coolant System pressure is 1850 psig and increasing with Emergency Core Cooling System flow decreasing.

Which ONE (1) of the following describes the status of the Loss of Coolant Accident (LOCA) and required transition?

A. The LOCA is isolated. Transition will be made to EOP-1.0A, Loss of Reactor or Secondary Coolant.

B. The LOCA is isolated. Transition will be made to ECA-1.1A, Loss of Emergency Coolant Recirculation.

C. The LOCA has not been isolated. Transition will be made to ECA-1.1A, Loss of Emergency Coolant Recirculation.

D. The LOCA has not been isolated. Transition will be made to EOP-1.0A, Loss of Reactor or Secondary Coolant.

Proposed Answer: A

Explanation:

A. Correct. Per Step 2 of ECA-1.2, ECCS valves are closed sequentially and then RCS pressure is monitored for an increase. In this case, by closing Safety Injection Valve 1/1-8835, the leak was isolated. A transition is now made to EOP-1.0A per Step 3.
B. Incorrect. Plausible because the LOCA is isolated and a transition to ECA-1.1A would be warranted if RCS pressure was not increasing. This is an RNO Action at Step 3.
C. Incorrect. Plausible if thought that a transition to ECA-1.1A is required even with RCS pressure increasing as this is an RNO Action step.
D. Incorrect. Plausible because entry into EOP-1.0A is required, however, the LOCA was isolated when Safety Injection Valve 1/1-8835 was closed.

Technical Reference(s) ECA-1.2, Steps 2 & 3 Attached w/ Revision # See Comments / Reference

Proposed references to be provided during examination: None

Learning Objective: EO1.XG3.OB406 Given plant/system conditions indicating a Loss of Reactor Coolant event (LOCA) has occurred, **RECOGNIZE, DETERMINE** and **EVALUATE** parameters, and **DISCUSS** operator actions to respond to the event in accordance with EOP-1.0A/B.

Question Source: Bank # EO1.XG3.OB406-5
Modified Bank # _____ (Note changes or attach parent)
New _____

Question History: Last NRC Exam _____

Question Cognitive Level: Memory or Fundamental Knowledge _____
Comprehension or Analysis X

10 CFR Part 55 Content: 55.41 10
55.43 _____

Comments / Reference: From ECA-1.2, Step 2	Revision # 8

CPSES EMERGENCY RESPONSE GUIDELINES	UNIT 1	PROCEDURE NO. ECA-1.2A
LOCA OUTSIDE CONTAINMENT	REVISION NO. 8	PAGE 3 OF 6

STEP	ACTION/EXPECTED RESPONSE	RESPONSE NOT OBTAINED
[R] 1	Verify Proper Valve Alignment: a. RHRP 1 & 2 HL RECIRC ISOL VLVS - CLOSED • 1/1-8701A • 1/1-8702A • 1/1-8701B • 1/1-8702B b. RHR TO HL 2 & 3 INJ ISOL VLV - CLOSED • 1/1-8840 c. SI TO HL INJ ISOL VLVS - CLOSED • 1/1-8802A • 1/1-8802B	Manually close valve(s). IF valve(s) can NOT be manually closed, THEN locally close valve(s).
2	Identify And Isolate Break: a. Sequentially close and open the following valves and monitor for an RCS pressure increase: 1) RHR TO CL INJ ISOL VLVS: • 1/1-8809A • 1/1-8809B 2) SI to CL 1•4 INJ ISOL VLV • 1/1-8835	

Comments / Reference: From ECA-1.2, Step 3	Revision # 8

CPSES EMERGENCY RESPONSE GUIDELINES	UNIT 1	PROCEDURE NO. ECA-1.2A
LOCA OUTSIDE CONTAINMENT	REVISION NO. 8	PAGE 4 OF 6

STEP	ACTION/EXPECTED RESPONSE	RESPONSE NOT OBTAINED
3	Check If Break Is Isolated:	
	a. RCS pressure - INCREASING	a. Go to ECA-1.1A, LOSS OF EMERGENCY COOLANT RECIRCULATION, Step 1.
	b. Go to EOP-1.0A, LOSS OF REACTOR OR SECONDARY COOLANT, Step 1.	

-END-

Examination Outline Cross-reference:	Level	RO	SRO
	Tier #	1	
	Group #	1	
	K/A #	056 AK3.02	
	Importance Rating	4.4	

Loss of Offsite Power: Knowledge of the reasons for the following responses as they apply to the Loss of Offsite Power: Actions contained in EOP for loss of offsite power

Proposed Question: Common 53

Given the following conditions in preparation for MODE 1 entry:

- Unit 2 is at 3% power when a Loss of Offsite Power occurs.
- The plant responds as expected.
- All Unit 2 Steam Generators are between 43% and 50% narrow range level.

While recovering from operation of the Blackout Sequencer, which ONE (1) of the following actions should be taken regarding Auxiliary Feedwater?

A. Secure the MDAFW Pumps and verify that the TDAFW Pump did NOT start.

B. Secure the MDAFW Pumps and the TDAFW Pump.

C. Verify adequate flow from the MDAFW Pumps and verify that the TDAFW Pump did NOT start.

D. Verify adequate flow from the MDAFW Pumps and secure the TDAFW Pump.

Proposed Answer: D

Explanation:

A. Incorrect. Plausible because Steam Generator levels are between 43 and 50%, however, adequate Auxiliary Feedwater flow has not been verified and the TDAFW Pump would have started.
B. Incorrect. Plausible because the TDAFW Pump would be secured once flow was determined to be adequate.
C. Incorrect. Plausible because adequate Auxiliary Feedwater flow must be verified from the MDAFW Pumps, however, the TDAFW Pump is secured because it started on a Loss of Offsite Power.
D. Correct. Adequate Auxiliary Feedwater flow must be verified from the MDAFW Pumps, once this is accomplished that TDAFW Pump is secured.

Technical Reference(s) ABN-601, Step 2.3.3 Note
EOP-0.0A, Attachment 1.A, Foldout Page
Attached w/ Revision # See Comments / Reference

Proposed references to be provided during examination: None

Learning Objective: OPD1.ECA.XG1.OB403 — Given plant conditions prior to entry into ECA-0.0, ECA-0.1 or ECA-0.2, **RECOGNIZE** and **DISCUSS** the event and **DESCRIBE** the required operator actions.

Question Source: Bank # ECA.XG1.OB401-3
Modified Bank # _____ (Note changes or attach parent)
New _____

Question History: Last NRC Exam _____

Question Cognitive Level: Memory or Fundamental Knowledge _____
Comprehension or Analysis X

10 CFR Part 55 Content: 55.41 7, 10
55.43 _____

Comments / Reference: From ABN-602, Step 2.3.3 Note | Revision # 7

CPNPP ABNORMAL CONDITIONS PROCEDURES MANUAL	UNIT 1 AND 2	PROCEDURE NO. ABN-602
RESPONSE TO A 6900/480V SYSTEM MALFUNCTION	REVISION NO. 7	PAGE 6 OF 99

2.3 Operator Actions

ACTION/EXPECTED RESPONSE	RESPONSE NOT OBTAINED

CAUTION:
- If power is greater than 10%. MDAFW should be allowed to run until the sequencer times out. The pumps will be stopped in Section 8.0, if not required. DO NOT throttle AFW above 10% power.
- The AFWP flow control and isolation valves are required to be fully open when above 10% power per TS 3.7.5.

NOTE:
- An emergency start will allow DG breaker to automatically close on a phase to ground bus fault (LOR 86-2/uEA1 or 86-2/uEA2).
- DG breaker will not automatically or manually close when a phase to phase bus fault (LOR 86-1) is present.
- An Operator Lockout signal from Blackout Sequencer (BOS) opens TDAFWP steam supply valves. The BOS also starts associated train MDAFWP. It may be necessary to limit AFW flow to prevent excessive RCS cooldown, or other adverse condition. Placing the TDAFW Pump in PULL-OUT with one safeguards bus de-energized will result in two inoperable AFW Pumps per TS 3.7.5. Throttling any train of AFW above 10% power renders the train INOPERABLE.
- Attachment 4 contains steps to deenergize the sequencer if the bus will not be needed. This would restore common equipment available to the other unit (e.g CRACs, UPS).

Comments / Reference: From EOP-0.0A, Attachment 1.A, Foldout Page	Revision # 8

CPSES EMERGENCY RESPONSE GUIDELINES	UNIT 1	PROCEDURE NO. EOP-0.0A
REACTOR TRIP OR SAFETY INJECTION	REVISION NO. 8	PAGE 18 OF 111

ATTACHMENT 1.A
PAGE 1 OF 1

FOLDOUT FOR EOP-0.0A REACTOR TRIP OR SAFETY INJECTION

1. RCP TRIP CRITERIA

NOTE: ABN-101, REACTOR COOLANT PUMP TRIP/MALFUNCTION criteria for tripping an RCP is applicable during use of the Emergency Procedures.

Trip all RCPs if BOTH conditions listed below occur:

a. CCP or SI pump - AT LEAST ONE RUNNING
b. RCS subcooling - LESS THAN 25°F (55°F FOR ADVERSE CONTAINMENT)

2. SHUTDOWN MARGIN CRITERIA
Emergency borate per ABN-107 if either of the following conditions below occur:

- Two or more control rods NOT fully inserted (1800 gallons of 7000 ppm boric acid for each control rod not fully inserted).
- Control rod position indication is NOT available (3600 gallons of 7000 ppm boric acid).

3. SG LEVEL/AFW FLOW CONTROL CRITERIA
Control AFW total flow as necessary to maintain an adequate Heat Sink (Narrow Range level greater than 43% (50% FOR ADVERSE CONTAINMENT) in any SG OR AFW total flow GREATER THAN 460 GPM).

IF any SG identified as faulted, THEN stop AFW flow to the SG.

IF any SG identified as ruptured, THEN stop AFW flow after ruptured SG level is greater than 43% (50% FOR ADVERSE CONTAINMENT).

IF not required, secure TDAFWP.

Examination Outline Cross-reference:

Level	RO	SRO
Tier #	1	
Group #	1	
K/A #	057 G 2.2.37	
Importance Rating	3.6	

Loss of Vital AC Instrument Bus: Equipment Control: Ability to determine operability and/or availability of safety related equipment

Proposed Question: Common 54

Given the following condition:

- Unit 1 is in MODE 1 and a failure of Inverter IV1EC1 has resulted in Distribution Panel 1EC1 being supplied from its alternate power source.

Which ONE (1) of the following identifies the configuration of the Train A Blackout Sequencer and Emergency Diesel Generator?

In this configuration, Train A Blackout Sequencer is _____ and Emergency Diesel Generator 1-01 will _____ if a loss of power occurs.

A. OPERABLE; NOT start

B. OPERABLE; start

C. INOPERABLE; NOT start

D. INOPERABLE; start

Proposed Answer: C

Explanation:

A. Incorrect. Plausible because plausible because the Emergency Diesel Generator will not start, however, the Blackout Sequencer is INOPERABLE in this condition.
B. Incorrect. Plausible if thought that the alternate power source still rendered the Blackout Sequence OPERABLE and that the 86-2 lockout relay was not affected.
C. Correct. Given the conditions listed in the Stem, the Blackout Sequencer is INOPERABLE and the Emergency Diesel Generator will not start due to an 86-2 lockout relay.
D. Incorrect. Plausible because the Blackout Sequencer is INOPERABLE in this condition, however, the Emergency Diesel Generator will not start.

Technical Reference(s) ABN-603, Step 3.3.2 Note Attached w/ Revision # See Comments / Reference

Proposed references to be provided during examination: None

Learning Objective: OP51.SYS.ES4.OB07

DESCRIBE the effect a loss and subsequent restoration of each of the following buses will have on major plant systems:

- uEC1

Question Source:

Bank # SYS.ES4.OB07-8

Modified Bank # _____ (Note changes or attach parent)

New _____

Question History: Last NRC Exam _____

Question Cognitive Level:

Memory or Fundamental Knowledge _____

Comprehension or Analysis X

10 CFR Part 55 Content:

55.41 7

55.43 _____

Comments / Reference: From ABN-603, Step 3.3.2 Note	Revision # 7

CPNPP ABNORMAL CONDITIONS PROCEDURES	UNIT 1 AND 2	PROCEDURE NO. ABN-603
LOSS OF PROTECTION OR INSTRUMENT BUS	REVISION NO. 7	PAGE 16 OF 29

3.3 Operator Actions

ACTION/EXPECTED RESPONSE	RESPONSE NOT OBTAINED
1 Check Unit status.	
☐ a. Verify Unit - IN MODE 5 OR 6	a. GO TO Step 2.
☐ b. Verify NONE of the following - IN PROGRESS: • Core alterations • Positive reactivity addition of ANY type. • Movement of irradiated fuel assemblies	b. Perform the following: 1) Stop operations involving positive reactivity additions that could result in loss of required SDM or boron concentration. 2) Suspend any core alterations OR fuel movement in progress.

NOTE:
- If uEC1 or uEC2 are powered from alternate power, the respective sequencer is INOPERABLE and, upon loss of power, the associated DG will not start due to an 86-2 lockout relay.
- It may be necessary to transfer control of Trn B MDAFW and TDAFW SG flow control valves from RSP to Control Room after power restored.

☐ 2 Dispatch an Operator to reenergize the affected instrument bus by moving the manual transfer switch to the alternate power supply (bottom of instrument panel).

Examination Outline Cross-reference:	Level	RO	SRO
	Tier #	1	
	Group #	1	
	K/A #	015/17 AA2.02	
	Importance Rating	2.8	

RCP Malfunctions: Ability to determine and interpret the following as they apply to the Reactor Coolant Pump Malfunction (Loss of RC Flow): Abnormalities in RCP air vent flow paths and/or cooling oil system

Proposed Question: Common 55

Given the following condition with Unit 1 at 36% power:

- ABN-502, Component Cooling Water System Malfunctions is in progress responding to a Component Cooling Water leak.

Which ONE (1) of the following describes the consequences of Reactor Coolant Pump #2 motor bearing temperature going above 195°F?

A. The Reactor will automatically trip due to an automatic trip of RCP #2.

B. All RCPs will automatically trip requiring a manual Reactor trip to be initiated.

C. The Reactor must be manually tripped then manually stop RCP #2.

D. All RCPs must be manually stopped requiring a manual Reactor trip to be initiated.

Proposed Answer: C

Explanation:

A. Incorrect. Plausible because there are automatic trips associated with the RCPs, however, high motor bearing temperatures require manual tripping of the pump.
B. Incorrect. Plausible because a manual Reactor trip is required, however, only the affected RCP needs to be stopped.
C. Correct. Motor bearing temperatures of 195°F require a manual Reactor trip and RCP trip per ABN-101.
D. Incorrect. Plausible if thought that the high temperature was associated with a loss of CCW return flow which requires all RCPs to be stopped, however, only the affected pump needs to be tripped.

Technical Reference(s): ABN-101, Attachment 1; ABN-101, Step 3.3.4; ABN-101, Step 8.2 — Attached w/ Revision # See Comments / Reference

Proposed references to be provided during examination: None

Learning Objective: OP51.SYS.RC1.OB17

ANALYZE the indications and **DESCRIBE** the mitigation strategy and major steps taken relative to the Reactor Coolant System for:

- ABN-101, Reactor Coolant Pump Trip/Malfunction

Question Source:

Bank # SYS.RC1.OB17-9

Modified Bank # _____ (Note changes or attach parent)

New _____

Question History: Last NRC Exam _____

Question Cognitive Level:

Memory or Fundamental Knowledge X

Comprehension or Analysis _____

10 CFR Part 55 Content:

55.41 10

55.43 _____

Comments / Reference: From ABN-101, Attachment 1	Revision # 10

CPSES ABNORMAL CONDITIONS PROCEDURES MANUAL	UNIT 1 AND 2	PROCEDURE NO. ABN-101
REACTOR COOLANT PUMP TRIP/MALFUNCTION	REVISION NO. 10	PAGE 46 OF 48

ATTACHMENT 1
PAGE 1 OF 1
RCP PARAMETERS

NOTE: The following list may aid determination of the validity of a temperature alarm or indication change:

- Local RTD (stator) monitoring (System Engineering/I&C) outside bioshield
  U1- RTD terminals: TBX-RCDARK-01[RCP 1, 2]; TBX-RCDARK-02 [RCP 3, 4]
  U2- RTD terminals: TCX-RCDARK-01[RCP 1, 2]; TCX-RCDARK-02 [RCP 3, 4]
- Thermographic performance comparison between pumps (System Engineering/Predictive Maintenance)
- Local evidence of restricted air flow
- Vibration change
- RCP motor amps high or changing
- Affected RCP loop flow or temperature change
- Bus voltage high or low, phase imbalance
- RCP motor air cooler air outlet temperature change
- Affected cooler CCW inlet/outlet temperature change
- Loose Parts Monitoring System alarm
- RCP seal leakoff or injection, flow or temperature change

Monitor the parameters below, as determined by Unit Supervisor:

IF motor bearing temperature is greater than or equal to 190°F, THEN perform Section 3.0 for RCP High or Low Lube Oil Level, while continuing.

IF motor bearing temperature increases by approximately 2°F from previous reading AND NO significant change in L\O Cooler CCW temperatures is observed, THEN notify System Engineering and Duty Manager.

IF any RCP bearing oil reservoir alarm LIT, THEN perform Section 3.0 while continuing section in effect.

RCP OPERATING LIMITS					
PARAMETER	LIMIT	RCP 1	RCP 2	RCP 3	RCP 4
MOT STAT WNDG TEMP	300°F	T0412A	T0432A	T0452A	T0472A
MOT UP RDL BRG TEMP	195°F	T0413A	T0433A	T0453A	T0473A
MOT UP THR BRG TEMP	195°F	T0414A	T0434A	T0454A	T0474A
MOT LOW RDL BRG TEMP	195°F	T0415A	T0435A	T0455A	T0475A
MOT LOW THR BRG TEMP	195°F	T0416A	T0436A	T0456A	T0476A
LOW SEAL WTR BEARING TEMP (Pump Bearing)	225°F	T0417A	T0437A	T0457A	T0477A
SEAL WTR IN TEMP	235°F	T0181A	T0182A	T0183A	T0184A

Comments / Reference: From ABN-101, Step 3.3.4	Revision # 10

CPSES ABNORMAL CONDITIONS PROCEDURES MANUAL	UNIT 1 AND 2	PROCEDURE NO. ABN-101
REACTOR COOLANT PUMP TRIP/MALFUNCTION	REVISION NO. 10	PAGE 7 OF 48

3.3 Operator Actions

		ACTION/EXPECTED RESPONSE	RESPONSE NOT OBTAINED
☐	1	Verify affected RCP IN OPERATION	Determine if any maintenance being performed on affected RCP which would cause alarm.
☐	2	Verify affected RCP motor bearing temperature(s) (Refer to Attachment 1 for points) - STABLE	Perform the following: a. At one to two minute intervals, MONITOR RCP motor bearing temperatures on affected pump. b. IF any bearing temperature increases significantly, THEN consult with Shift Manager and notify Generation Controller of potential load reduction requirement (ODA-308).
☐	3	Verify Containment atmosphere - STABLE	Control Containment HVAC to stabilize temperature.
[C] ☐	4	Check all motor bearing temperatures on affected pump - LESS THAN 195°F.	Perform the following: a. Manually trip Reactor AND GO TO EOP-0.0A/B while other qualified operators continue with this procedure. b. Stop affected RCP. c. GO TO Section 2.0 of this procedure.

Comments / Reference: From ABN-101, Step 8.2	Revision # 10

CPSES ABNORMAL CONDITIONS PROCEDURES MANUAL	UNIT 1 AND 2	PROCEDURE NO. ABN-101
REACTOR COOLANT PUMP TRIP/MALFUNCTION	REVISION NO. 10	PAGE 35 OF 48

8.0 RCP HIGH TEMPERATURE OR LOSS OF CCW TO ANY RCP

8.1 Symptoms

a. Annunciator Alarms

- ANY RCP THBR CLR CCW RET TEMP HI (3B-2.11)
- ANY RCP THBR CLR CCW RET FLO LO (3B-3.11)
- ANY RCP MOTOR CLR CCW RET FLO LO (3B-2.12)
- ANY RCP UP BRG L\O CLR CCW RET FLO LO (3B-3.12)
- ANY RCP LOW BRG L\O CLR CCW RET FLO LO (3B-4.12)

b. Plant Indications

- Computer alarms on RCP bearing temperatures
- Computer alarm on RCP motor winding temperatures

8.2 Automatic Actions

NOTE: Closure of u-HS-4709 or u-HS-4696 isolates CCW return from ALL RCPs.

a. High thermal barrier CCW return temperature (182.5°F) will cause the following:

1) Auto closure of Thermal Barrier Cooler CCW Return Valve for affected pumps(s)

- u-HS-4691 RCP 1 THBR CLR CCW RET VLV
- u-HS-4692 RCP 2 THBR CLR CCW RET VLV
- u-HS-4693 RCP 3 THBR CLR CCW RET VLV
- u-HS-4694 RCP 4 THBR CLR CCW RET VLV

2) Auto closure of u-HS-4709, THBR CLR CCW RET ISOL VLV (ORC)

b. High thermal barrier return flow will cause auto closure of u-HS-4696, THBR CLR CCW RET ISOL VLV (IRC)

Examination Outline Cross-reference:

Level	RO	SRO
Tier #	1	
Group #	1	
K/A #	011 EA1.04	
Importance Rating	4.4	

Large Break LOCA: Ability to operate and monitor the following as they apply to a Large Break LOCA: ESF actuation system in manual

Proposed Question: Common 56

Given the following conditions:

- Unit 1 has experienced a Loss of Coolant Accident and all Engineered Safety Feature Actuations occurred as required.
- Containment pressure is 6 psig and rising.
- During the implementation of EOP-1.0, Loss of Reactor or Secondary Coolant, the actions to stop Residual Heat Removal (RHR) Pumps have just been completed.

Which ONE (1) of the following describes the required response if Reactor Coolant System pressure drops to 400 psig?

A. No action is required as long as Reactor Coolant System pressure is greater than 325 psig.

B. Manually actuate RHR Pump suction swapover to the Containment Sump on low RWST level.

C. Manually actuate Safety Injection and verify RHR Pumps start.

D. Manually start the RHR Pumps.

Proposed Answer: D

Explanation:

A. Incorrect. Plausible because if Adverse Containment conditions did not exist it would be the correct answer.
B. Incorrect. Plausible because manual RHR Pump start is required but swap-over is automatic based on the actions taken to reset the swap-over logic when RHR was secured.
C. Incorrect. Plausible because SI initiation would start the RHR Pumps but it would also do other unnecessary actuations.
D. Correct. With Containment pressure greater than 6 psig, Adverse Containment parameters must be implemented. In this case, when RCS pressure drops below 425 psig the RHR pumps must be manually restarted.

Technical Reference(s) EOP-1.0A, Attachment 1.A, Foldout Page
EOP-1.0A, Step 8
OP.51.SYS.SI1.LN, Page 40

Attached w/ Revision # See Comments / Reference

Proposed references to be provided during examination: None

Learning Objective: OP51.SYS.SI1.OB29

ANALYZE the indications and **DESCRIBE** the mitigation strategy and major steps taken, both initial and subsequent, for:

- EOP-1.0, Loss of Reactor or Secondary Coolant

Question Source:
Bank # _____
Modified Bank # _____ (Note changes or attach parent)
New X

Question History: Last NRC Exam _____

Question Cognitive Level:
Memory or Fundamental Knowledge _____
Comprehension or Analysis X

10 CFR Part 55 Content:
55.41 10
55.43 _____

Comments / Reference: From EOP-1.0A, Attachment 1.A, Foldout Page | Revision # 8

CPSES EMERGENCY RESPONSE GUIDELINES	UNIT 1	PROCEDURE NO. EOP-1.0A
LOSS OF REACTOR OR SECONDARY COOLANT	REVISION NO. 8	PAGE 18 OF 43

ATTACHMENT 1.A
PAGE 1 OF 1

FOLDOUT FOR EOP-1.0A, LOSS OF REACTOR OR SECONDARY COOLANT

1. RCP TRIP CRITERIA

Trip all RCPs if BOTH conditions listed below occur:

a. CCP or SI pump - AT LEAST ONE RUNNING

b. RCS subcooling - LESS THAN 25°F (55°F FOR ADVERSE CONTAINMENT)

2. SI REINITIATION CRITERIA

Manually start ECCS pumps as necessary if EITHER condition listed below occurs:

- RCS subcooling - LESS THAN 25°F (55°F FOR ADVERSE CONTAINMENT)
- PRZR level - CANNOT BE MAINTAINED GREATER THAN 13% (34% FOR ADVERSE CONTAINMENT)

Comments / Reference: From EOP-1.0A, Step 8	Revision # 8

CPSES EMERGENCY RESPONSE GUIDELINES	UNIT 1	PROCEDURE NO. EOP-1.0A
LOSS OF REACTOR OR SECONDARY COOLANT	REVISION NO. 8	PAGE 9 OF 43

STEP	ACTION/EXPECTED RESPONSE	RESPONSE NOT OBTAINED

CAUTION: RCS pressure should be monitored. If RCS pressure decreases in an uncontrolled manner to less than 325 PSIG (425 PSIG FOR ADVERSE CONTAINMENT) the RHR pumps must be manually restarted to supply water to the RCS.

* 8	Check If RHR Pumps Should Be Stopped:	
	a. Check RCS pressure:	
	1) RCS pressure - GREATER THAN 325 PSIG (425 PSIG FOR ADVERSE CONTAINMENT)	1) Go to Step 10.
	2) RCS pressure - STABLE OR INCREASING	2) Go to Step 9.
	b. RHR pumps - ANY RUNNING WITH SUCTION ALIGNED TO RWST	b. Go to Step 9.
	c. Stop RHR pumps and place in standby.	
	d. Reset RHR auto switchover.	

Comments / Reference: From OP.51.SYS.SI1.LN, Page 40	Revision # 03/31/00

RHR Auto Switchover Signal

The RHR Auto Switchover signal is generated by the Solid State Protection System when 2 of 4 RWST level channels are ≤ 33% coincident with a Safety Injection signal.

RHR Auto Switchover Signal
2/4 RWST Level ≤33% **AND**
Safety Injection signal

These signals cause Containment Sump to RHR Pump Suction Isolation Valves (u-8811A & B) to open. Other Main Control Board indications for this actuation are the "RWST 2 OF 4 LVL LO-LO" alarm on u-ALB-4B, and a blue actuation light for each train on CB-04, labeled "RHR AUTO SWOVR RESET PERM."

RHR Auto Switchover Actuation
Containment Sump to RHR Pump Suction Isol Valves u-8811A & B open
"RWST 2 OF 4 LVL LO-LO" alarm on u-ALB-4B
"RHR AUTO SWOVR RESET PERM" u-8811A & B blue lights lit (u-CB-04)

The purpose of this actuation is to supply a source of suction water to the RHR Pumps before the RWST is depleted. The actuation must take place with enough water left in the RWST to allow the operators to perform the numerous manual operations required to transfer ECCS and Containment Spray to long-term recirculation, without requiring the emergency pumps to be stopped during a worst-case LOCA. The actuation setpoint is also low enough to allow the Emergency Core Cooling System to operate for at least 10 minutes before operator action is required to complete the transfer.

RHR Auto Switchover is reset using pushbuttons 1/u-RWSTA & 1/u-RWSTB on u-CB-04 labeled "RHR AUTO SWOVR RESET." This manual reset feature is provided to allow RHR Auto Switchover actuation after the Safety Injection signal has been reset.

Examination Outline Cross-reference:	Level	RO	SRO
	Tier #	1	
	Group #	2	
	K/A #	059 AA1.02	
	Importance Rating	3.3	

Accidental Liquid Radwaste Release: Ability to operate and/or monitor the following as they apply to the Accidental Liquid Radwaste Release: ARM system

Proposed Question: Common 57

Given the following condition:

- PC-11, Digital Radiation Monitoring System is alarming and the display for 1-RE-5100, Turbine Building Sump 1-02 Radiation Detector is RED.

Which ONE (1) of the following describes the alarm on 1-RE-5100, Turbine Building Sump 1-02 Radiation Detector and the automatic action that should occur?

1-RE-5100, Turbine Building Sump 1-02 Radiation Detector...

A. has an OPERATE FAILURE alarm and Turbine Building drains have shifted to the Co-Current Waste System.

B. has an OPERATE FAILURE alarm and Turbine Building drains have shifted to the Low Volume Waste Pond.

C. is in HIGH alarm and Turbine Building drains have shifted to the Co-Current Waste System.

D. is in HIGH alarm and Turbine Building drains have shifted to the Low Volume Waste Pond.

Proposed Answer: C

Explanation:

A. Incorrect. Plausible because PC-11 can have an OPERATE FAILURE alarm with automatic actions but has a BLUE display.
B. Incorrect. Plausible because PC-11 can have an OPERATE FAILURE alarm with automatic actions but has a BLUE display.
C. Correct. Per the conditions listed, this is the action that occurs.
D. Incorrect. Plausible because the RED display is for a HIGH alarm and the drains do shift but not to the Low Volume Waste Pond.

Technical Reference(s) OP51.SYS.RM1.LN, Page 39
SOP-706, Attachment 1
ABN-903, Step 2.3.4

Attached w/ Revision # See Comments / Reference

Proposed references to be provided during examination: None

Learning Objective:
OP51.SYS.RM1.OB04

STATE the location (if applicable) of the following indications and controls, and **DESCRIBE** how each is interpreted or used to predict, monitor, or control changes in the Digital Radiation Monitoring System:

- Specific Monitor Displays

OP51.SYS.RM1.OB07

LIST and **EXPLAIN** the Digital Radiation Monitoring System design features which provide for the trips, permissives, and interlocks associated with the following monitors:

- Turbine Building Drains

Question Source: Bank # _____
Modified Bank # _____ (Note changes or attach parent)
New X

Question History: Last NRC Exam _____

Question Cognitive Level: Memory or Fundamental Knowledge _____
Comprehension or Analysis X

10 CFR Part 55 Content: 55.41 11
55.43 _____

Comments / Reference: From OP51.SYS.RM1.LN, Page 39	Revision # 08/30/04

TURBINE BUILDING DRAINS

This monitor is an online type process monitor. The detector is mounted next to the piping in a shielded enclosure. A high radiation alarm or an Operate Failure will cause the Turbine Building drains to divert from the Low Volume Waste Ponds to the Waste Holdup Tank. There is no Control Room indication other than the PC-11 that the discharge path has changed. A check source failure can also cause a changeover.

Comments / Reference: From SOP-706, Attachment 1	Revision # 7

CPSES SYSTEM OPERATING PROCEDURE MANUAL	UNIT COMMON	PROCEDURE NO. SOP-706
DIGITAL RADIATION MONITORING SYSTEM	REVISION NO. 7	PAGE 32 OF 50

ATTACHMENT 1
PAGE 1 OF 1

STATUS AND ASSOCIATED COLOR/INTENSITY CUES

PC-11 POLL STATUS
MONITOR OFFLINE . . . . . WHITE

PC-11 COMMUNICATIONS
MONITOR COMMUNICATIONS FAILURE . . . . . MAGENTA
CHANNEL NOT RESPONDING TO POLL . . . . . MAGENTA

OPERATE FAILURE
MONITOR DATA BASE UNKNOWN . . . . . BLUE
MONITOR LOSS OF SAMPLE FLOW . . . . . BLUE
CHANNEL OUT OF SERVICE . . . . . BLUE
CHANNEL FILTER NOT MOVING . . . . . BLUE
CHANNEL FILTER CLOGGED . . . . . BLUE
CHANNEL NO PULSES RECEIVED . . . . . BLUE
CHANNEL CHECK SOURCE TEST FAILED . . . . . BLUE
CHANNEL LOSS OF SAMPLE FLOW . . . . . BLUE
CHANNEL HIGH TEMPERATURE CONDITION . . . . . BLUE
CHANNEL OPERATE FAILURE . . . . . BLUE

CHANNEL HIGH ALARM
CHANNEL IN HIGH ALARM . . . . . RED

CHANNEL ALERT ALARM
CHANNEL IN ALERT ALARM . . . . . YELLOW

Comments / Reference: From ABN-903, Step 2.3.4	Revision # 6

CPSES ABNORMAL CONDITIONS PROCEDURES MANUAL	UNIT 1 AND 2	PROCEDURE NO. ABN-903
ACCIDENTAL RELEASE OF RADIOACTIVE LIQUID	REVISION NO. 6	PAGE 6 OF 13

2.3 Operator Actions

ACTION/EXPECTED RESPONSE	RESPONSE NOT OBTAINED
4 Check Radioactivity in turbine building sump.	
☐ a. Verify turbine building sump monitor on PC11 - NOT IN ALERT OR HI ALARM (GREEN/OPERATE) • Unit 1 only, TBD172 (1-RE-5100), TURBINE BUILDING SUMP 1-02 RADIATION DETECTOR • Unit 2 only, TBD272 (2-RE-5100), TURBINE BUILDING SUMP 2-04 RADIATION DETECTOR	a. Notify Rad Waste to Perform following: 1) Ensure Co-current WWHUT aligned correctly. 2) Ensure affected turbine building sump discharge aligned per RWS-108, u-RE-5100 Radiation Monitor Alarm (Channel # TBD-u72) 3) Refer to STA-653.
☐ b. Contact Chemistry to sample affected sump for confirmation of indicated increase in activity.	
☐ c. Notify Radiation Protection of possible contamination in turbine building.	
☐ 5 Verify Low Volume Waste Oil Colexer - NOT IN OPERATION. (U2 TB 778 NE Wall)	Stop oil colexer per RWS-107.

Examination Outline Cross-reference:	Level	RO	SRO
	Tier #	1	
	Group #	2	
	K/A #	W/E15 EK3.2	
	Importance Rating	2.8	

Containment Flooding: Knowledge of the reasons for the following responses as they apply to the Containment Flooding: Normal, abnormal, and emergency procedures associated with Containment Flooding

Proposed Question: Common 58

FRZ-0.2A, Response to Containment Flooding directs that the Containment Sump be sampled for activity. Containment Sump level and sample results are then transmitted to Plant Staff.

Receiving this information will allow a decision to be made on which ONE (1) of the following actions?

Containment Sump level and sample result information will determine if...

A. Containment Spray System may be secured.

B. Containment Spray Additive Tank should be isolated.

C. Component Cooling Water to Containment should be isolated.

D. Containment Sump water may be transferred to tanks outside Containment.

Proposed Answer: D

Explanation:

A. Incorrect. Plausible if thought that the Containment Spray System was necessary for continued removal of iodine from the containment atmosphere.
B. Incorrect. Plausible because the pH of the water is a concern with regards to removing iodine from the Containment atmosphere, however, flooding requires removal of water from Containment.
C. Incorrect. Plausible because CCW piping could have been damaged during the event, however, this piping was isolated from inside and outside Containment upon a Containment Isolation Signal.
D. Correct. Given the conditions listed in the Stem, this information is used to determine when and where water can be transferred outside of Containment.

Technical Reference(s) FRZ-0.2, Step 3
FRZ-0.2, Attachment 2, Step 3 Bases
Attached w/ Revision # See Comments / Reference

Proposed references to be provided during examination: None

Learning Objective: LO41.FRZ.XH5.OB01 Given a major action step of FRZ-0.1A/B, FRZ-0.2A/B, or FRZ-0.3A/B, **STATE** the basis for the step.

Question Source: Bank # FRZ.XH5.OB401-3
Modified Bank # _____ (Note changes or attach parent)
New _____

Question History: Last NRC Exam _____

Question Cognitive Level: Memory or Fundamental Knowledge X
Comprehension or Analysis _____

10 CFR Part 55 Content: 55.41 10
55.43 _____

Comments / Reference: From FRZ-0.2, Steps 3 & 4	Revision # 8

CPSES EMERGENCY RESPONSE GUIDELINES	UNIT 1	PROCEDURE NO. FRZ-0.2A
RESPONSE TO CONTAINMENT FLOODING	REVISION NO. 8	PAGE 4 OF 9

STEP	ACTION/EXPECTED RESPONSE	RESPONSE NOT OBTAINED
2	Isolate Leakage Source To Containment: • Close CNTMT DEMIN WTR ISOL VLVS 1-HS-5366 and 1-HS-5365. • Close CNTMT FIRE PROT ISOL VLVS 1-HS-4075C and 1-HS-4075B. • Close Ventilation Chilled water valves as necessary. • Close CCW valves as necessary. • Close RMUW TO PRT/CNTMT SPLY ISOL VLV. 1/1-8047. • Close CVCS isolation valves as necessary. • Close FW isolation and bypass valves. • Close AFW isolation valves unless necessary for RCS cooldown.	
3	Notify Chemistry To Sample Containment Sump Activity.	
4	Notify Plant Staff Of Sump Level And Activity To Obtain Recommended Action.	

Comments / Reference: From FRZ-0.2, Attachment 2, Step 3 Bases	Revision # 8

CPSES EMERGENCY RESPONSE GUIDELINES	UNIT 1	PROCEDURE NO. FRZ-0.2A
RESPONSE TO CONTAINMENT FLOODING	REVISION NO. 8	PAGE 6 OF 9

ATTACHMENT 2
PAGE 1 OF 4

BASES

STEP 1: This step instructs the operator to try to identify the unexpected source of the water in the containment sump. Containment flooding is a concern since critical plant components necessary for plant recovery may be damaged and rendered inoperable. A water level greater than the design basis flood level (816 FT) provides an indication that water volumes other than those represented by the emergency stored water sources (e.g., RWST, accumulators, etc.) have been introduced into the containment sump. The identified systems provide water to components inside the containment and a major leak or break in one of these lines could introduce large quantities of water into the sump.

The Containment Sump Level transmitters are multi-point sensors that provide discrete points of indication (e.g., one foot intervals). The maximum containment water level for a design basis accident is 816 feet and 10 inches (816' 10"). With consideration for channel accuracy and channel sensor location, a setpoint value of 816 FT is used; thus, an actual flooded condition of containment may not be present with an ORANGE priority indication. The actions initiated and observation of containment sump level trends once FRZ-0.2A is performed provides the necessary actions to limit the effects of a flooding condition.

STEP 2: Isolation of any broken or leaking water line inside containment is essential to maintaining the water level below the design basis flood level.

STEP 3: The step instructs the operator to have the activity level in the containment sump water determined in order to provide information concerning the possible transfer of containment sump water to plant storage tanks outside the containment. The transfer of containment sump water from the containment to other plant storage tanks may be desirable in order to minimize the potential for flooding of critical plant components inside the containment. However, the ultimate disposition of this water outside the containment will depend, in large part, on the level of radioactivity in the water. Appropriate precautions should be observed due to the potential for high radioactivity.

Examination Outline Cross-reference:

Level	RO	SRO
Tier #	1	
Group #	2	
K/A #	W/E16 G 2.4.9	
Importance Rating	3.8	

High Containment Radiation: Emergency Procedures/Plan: Knowledge of low power/shutdown implications in accident (e.g., loss of coolant accident or loss of residual heat removal) mitigation strategies

Proposed Question: Common 59

Given the following conditions:

- At 0427, Unit 1 was in MODE 4 with Pressurizer level at 25% prior to drain down for Nozzle Dam installation.
- The core has NOT been offloaded.
- At 0428, a loss of Reactor Coolant temperature control occurred with Train A Residual Heat Removal in service.
- At 0429, ABN-104, Residual Heat Removal System Malfunction was entered.
- At 0451, Reactor Coolant System pressure rose to 405 psig.
- At 0452, Reactor Coolant System temperature rose to 362°F and continued to slowly rise.

Which ONE (1) of the following mitigation actions should be given priority?

A. Start Train B RHR Pump and place Train A RHR Pump in STANDBY.

B. Verify Cold Leg Injection Valve 1-8809A, RHR TO CL 1 & 2 INJ ISOL VLV is OPEN.

C. STOP Train A RHR Pump and isolate the RHR Suction~~s~~ from the RCS Hot Leg~~s~~, by closing 1/1-8701A, RHRP 1 HL RECIRC ISOL VLV and 1/1-8702A, RHRP 1 HL RECIRC ISOL VLV.

D. Verify both RHR Suctions from the RCS Hot Leg for Train A RHR Pump, 1/1-8701A, RHRP 1 HL RECIRC ISOL VLV and 1/1-8702A, RHRP 1 HL RECIRC ISOL VLV are OPEN.

Proposed Answer: C

Explanation:

A. Incorrect. Plausible if thought that starting the opposite train of RHR would improve the situation.
B. Incorrect. Plausible because this action is required if RCS temperature does not exceed 350°F and pressure does not exceed 400 psig. See ABN-104 Steps 4.3.3 and 4.3.4.
C. Correct. With RCS temperature greater than 350°F the RNO action of ABN-104, Step 4.3.3 requires the stopping of all running RHR Pumps and the isolating RHR Suctions.
D. Incorrect. Plausible because this action is required per ABN-104, Step 3.3.c for Erratic RHR Pump Parameters, however, the RHR pumps must be secured due to temperature and pressure restrictions.

Technical Reference(s): ABN-104, Section 4.0; ABN-104, Step 3.3.c — Attached w/ Revision # See Comments / Reference

Proposed references to be provided during examination: None

Learning Objective: OP51.SYS.RH1.OB21

ANALYZE the indications and **DESCRIBE** the mitigation strategy and major steps taken relative to the Residual Heat Removal System, both initial and subsequent, for:

- ABN-104, Residual Heat Removal System Malfunction

Question Source:
Bank # _____
Modified Bank # _____ (Note changes or attach parent)
New X

Question History: Last NRC Exam _____

Question Cognitive Level:
Memory or Fundamental Knowledge _____
Comprehension or Analysis X

10 CFR Part 55 Content:
55.41 10
55.43 _____

Comments / Reference: From ABN-104, Section 4.0	Revision # 8

CPSES ABNORMAL CONDITIONS PROCEDURES MANUAL	UNIT 1 AND 2	PROCEDURE NO. ABN-104
RESIDUAL HEAT REMOVAL SYSTEM MALFUNCTION	REVISION NO. 8	PAGE 18 OF 102

4.0 MODE 4 OR 5 LOSS OF RCS TEMPERATURE/FLOW CONTROL - RCS FILLED

4.1 Symptoms

a. Annunciator Alarms

- "RHR HX 1 CCW RET FLO LO" (3B-1.7)
- "RHR HX 2 CCW RET FLO LO" (3B-2.7)
- "RHRP 1/2 TO CL INJ FLO LO" (4B-4.4)

b. Plant Indications

- RCS temperature increasing uncontrollably
- Unexpected decrease in RCS subcooling margin
- Unexpected increase or decrease in RHR flow

4.2 Automatic Actions

Heat exchanger bypass flow control valves will modulate to maintain approximately 3950 gpm pump discharge flow when in automatic.

- u-FI-618, RHR TO CL 1 & 2 INJ FLO
- u-FK-618, RHR HX 1 BYP FLO CTRL
- u-FI-619, RHR TO CL 3 & 4 INJ FLO
- u-FK-619, RHR HX 2 BYP FLO CTRL

Comments / Reference: From ABN-104, Section 4.0	Revision # 8

4.3 Operator Actions

ACTION/EXPECTED RESPONSE	RESPONSE NOT OBTAINED
☐ 1 Verify CCW flow through RHR heat exchanger on affected train - BETWEEN 2,900 GPM AND 7,600 GPM: • u-FIS-4556, RHR HX 1 CCW RET FLO • u-FIS-4558, RHR HX 2 CCW RET FLO	Perform ABN-502, while continuing with this section at Step 2. IF RCS temperature can NOT be controlled, THEN start the standby pump per Attachment 18.
☐ 2 Check Unit status - UNIT IN MODE 5 OR 6	GO TO Step 3b.
3 Monitor RCS temperature during performance of this procedure.	
☐ a. Verify RCS temperature does NOT EXCEED 140°F	a. Isolate the PRT adaptor assembly connections to the RCS: • uRC-8098, PRZR u-01 VNT HDR VNT TC VLV (CNTMT 905' PRZR Up Room) • uRC-0035, RV u-01 HEAD VNT TC VLV (CNTMT 860 on top RV Head)

CAUTION: The RCS temperature must be maintained less than 350°F while the RHR system is in service. The RCS pressure shall be maintained less than 400 psig.

☐ b. Verify RCS temperature does NOT - EXCEED 350°F.	b. Perform the following: 1) Stop all running RHR pumps. 2) Isolate the RHR suction from the RCS hot legs: • 1/u-8701A, RHRP 1 HL RECIRC ISOL VLV • 1/u-8702A, RHRP 1 HL RECIRC ISOL VLV • 1/u-8701B, RHRP 2 HL RECIRC ISOL VLV • 1/u-8702B, RHRP 2 HL RECIRC ISOL VLV 3) GO TO Section 2.0, this procedure.

Comments / Reference: From ABN-104, Section 4.0	Revision # 8

4.3 Operator Actions

ACTION/EXPECTED RESPONSE	RESPONSE NOT OBTAINED
☐ 4 Verify cold leg injection valve for running RHR pump - OPEN: • 1/u-8809A, RHR TO CL 1 & 2 INJ ISOL VLV • 1/u-8809B, RHR TO CL 3 & 4 INJ ISOL VLV	Manually open valve(s) as necessary.
☐ 5 Verify RHR flow - BETWEEN 3,800 GPM and 4,000 GPM AND STABLE: • u-FI-618, RHR TO CL 1 & 2 INJ FLO • u-FI-619, RHR TO CL 3 & 4 INJ FLO	Perform the following: a. Manually control the RHR heat exchanger bypass valve -AND- the RHR heat exchanger outlet valve to maintain between 3,800 gpm and 4,000 gpm -AND- RCS at desired temperature 1) RHR HX bypass valve: • u-FK-618, RHR HX 1 BYP FLO CTRL • u-FK-619, RHR HX 2 BYP FLO CTRL 2) RHR HX outlet valve: • u-HC-606, RHR HX 1 FLO CTRL • u-HC-607, RHR HX 2 FLO CTRL b. IF RHR flow control is lost due to loss of Instrument Air to flow control valve(s), THEN align emergency air supply to affected valve(s) as follows while continuing this section at Step 6: • Unit 1 Train A, Attachment 12 • Unit 1 Train B, Attachment 13 • Unit 2 Train A, Attachment 14 • Unit 2 Train B, Attachment 15 c. IF required RHR flow can NOT be restored, THEN GO TO Section 2.0, this procedure.

Comments / Reference: From ABN-104, Step 3.3.c	Revision # 8

CPSES ABNORMAL CONDITIONS PROCEDURES MANUAL	UNIT 1 AND 2	PROCEDURE NO. ABN-104
RESIDUAL HEAT REMOVAL SYSTEM MALFUNCTION	REVISION NO. 8	PAGE 15 OF 102

3.3 Operator Actions

ACTION/EXPECTED RESPONSE	RESPONSE NOT OBTAINED
1 ☐ c. Verify BOTH hot leg RECIRC valves for affected pump - OPEN: 1) RHR Pump 1 • 1/u-8701A, RHRP 1 HL RECIRC ISOL VLV • 1/u-8702A, RHRP 1 HL RECIRC ISOL VLV 2) RHR Pump 2 • 1/u-8701B, RHRP 2 HL RECIRC ISOL VLV • 1/u-8702B, RHRP 2 HL RECIRC ISOL VLV	c. Stop the affected pump AND GO TO Section 2.0, this procedure.

Examination Outline Cross-reference:	Level	RO	SRO
	Tier #	1	
	Group #	2	
	K/A #	024 G 2.1.23	
	Importance Rating	4.3	

Emergency Boration: Conduct of Operations: Ability to perform specific system and integrated plant procedures during all modes of plant operation

Proposed Question: Common 60

Given the following conditions:

- Unit 2 is at 100% power.
- Unit 1 is in MODE 6 with the Reactor Head removed and fuel in the core.
- Refueling Cavity level was just raised using Residual Heat Removal Train A from the Refueling Water Storage Tank.
- Residual Heat Removal Train A has been restored to standby.
- Refueling Water Storage Tank level is 22% and there is 19% in Boric Acid Tank #1 and 80% in Boric Acid Tank #2.
- Boric Acid Transfer Pumps 1-01 and 1-02 are out-of-service for maintenance.
- Centrifugal Charging Pumps 1-01 and 1-02 are available.
- The gravity feed flowpath has been verified OPERABLE per OPT-202, Boration System Operability Verification.

Which ONE (1) of the following statements describes the current status of Emergency Boration based on the conditions given above?

Emergency Boration Flow path is...

A. OPERABLE with RWST level greater than 20% needed for gravity feed.

B. INOPERABLE because no adequate Unit 1 borated water source is available.

C. OPERABLE with Boric Acid Storage Tank 1-01 greater than 10%.

D. INOPERABLE with RWST level less than 55% needed for gravity feed.

Proposed Answer: B

Explanation:

A. Incorrect. Plausible because an RWST level of 24% would be OPERABLE. See OPT-104A-1, Form 1.
B. Correct. Given the conditions listed, there are no OPERABLE Unit 1 borated water sources.
C. Incorrect. Plausible because 10% in the Boric Acid Tank would be acceptable if a Boric Acid Transfer Pump were available on Unit 1. Gravity flow requires 20% level.
D. Incorrect. Plausible if thought that RWST level had to be greater than 55% to support gravity feed.

Technical Reference(s) TRM, TRS 13.1.32
OPT-104A-1, Form 1
Attached w/ Revision # See Comments / Reference

Proposed references to be provided during examination: None

Learning Objective: OP51.SYS.CS2.OB07
Given specific plant conditions, **DESCRIBE** and **EVALUATE** the need for emergency boration to include:

- Conditions that require emergency boration
- Methods available (preferred and alternate)
- Amount and flow rates available for each condition

OP51.SYS.CS2.OB15
LIST and **DESCRIBE** the following Technical Specifications (i.e. LCOs, action statements and conditional surveillance requirements of one hour and less, if applicable) for the Reactor Makeup System:

- Boration Injection System

Question Source:
Bank # _____
Modified Bank # _____ (Note changes or attach parent)
New X

Question History: Last NRC Exam _____

Question Cognitive Level:
Memory or Fundamental Knowledge _____
Comprehension or Analysis X

10 CFR Part 55 Content:
55.41 6, 10
55.43 _____

Comments / Reference: From Technical Requirements Manual TRS 13.1.32	Revision # 56

SURVEILLANCE REQUIREMENTS (continued)

	SURVEILLANCE	FREQUENCY
TRS 13.1.32.1	---------- - NOTE - Only required to be performed if the outside temperature is less than 40°F. ---------- Verify the RWST has a minimum solution temperature of 40°F.	24 hours
TRS 13.1.32.2	Verify that the temperature of the flow path and boric acid storage tank solution temperature is greater than or equal to 65°F.	7 days
TRS 13.1.32.3	Verify the boron concentration of the boric acid storage tank has a minimum boron concentration of 7000 ppm.	7 days
TRS 13.1.32.4	Verify a minimum indicated borated water level of 10% when using the boric acid pump from the boric acid storage tank.	7 days
TRS 13.1.32.5	Verify a minimum indicated borated water level of 20% when using gravity feed from the boric acid storage tank.	7 days

Comments / Reference: From OPT-104A-1, Form 1	Revision # 19

OPERATIONS WEEKLY SURVEILLANCES

MODE	TECH SPEC	PARAMETERS	ACCEPTANCE CRITERIA	CHANNEL NUMBERS	READING	NOTES
ALL	3.5.4.2 13.1.32.7 (7 DA*)	REFUELING WATER STORAGE TANK LEVEL (%)	LEVEL ≥ 95% IN MODES 1 THROUGH 4. LEVEL ≥ 24% IN MODES 5 AND 6.	1-LI-930 (CB-02)		IN MODE 5 OR 6, EITHER THE BORIC ACID STORAGE TANK OR THE RWST MUST BE OPERABLE.
				1-LI-931 (CB-02)		
				1-LI-932 (CB-04)		
				1-LI-933 (CB-04)		
ALL	13.1.31.3 13.1.32.4 13.1.32.5 (7 DA*)	BORIC ACID STORAGE TANK LEVEL (%)	LEVEL ≥ 50% IN MODES 1 THROUGH 4. LEVEL ≥ 10% IN MODES 5 AND 6. INDICATE THE BAT USED FOR UNIT 1 BY CIRCLING THE OPERABLE LIs. N/A THE BAT READINGS FOR THE TANK USED FOR UNIT 2.	X-LI-102 (CB-06) BA TK 1 LVL		IN MODE 5 OR 6, EITHER THE BORIC ACID STORAGE TANK OR THE RWST MUST BE OPERABLE.
				X-LI-104 (CB-06) BA TK 1 LVL		

Examination Outline Cross-reference:

Level	RO	SRO
Tier #	1	
Group #	2	
K/A #	067 AK3.04	
Importance Rating	3.3	

Plant Fire on Site: Knowledge of the reasons for the following responses as they apply to the Plant Fire on Site: Actions contained in EOP for plant fire on site

Proposed Question: Common 61

Given the following conditions with both Units in MODE 1 at 100% power:

- A fire has occurred in one of the Control Room panels.
- The Shift Manager has made the decision to evacuate the Control Room.

Which ONE (1) of the following actions is to be performed prior to exiting the Control Room in accordance with ABN-803A, Response to a Fire in the Control Room or Cable Spreading Room?

A. Position all feeder breakers for Safeguards Buses in PULL-OUT to prevent inadvertent breaker operation.

B. Place LCV-112A, Volume Control Tank Inlet Valve Controller to DIVERT/HUT to minimize inventory loss.

C. Depress Turbine Driven AFW Pump Trip & Throttle Valve TRIP pushbutton to prevent overfeeding when a Safeguards Bus is deenergized at the Hot Shutdown Panel.

D. Place Pressurizer Spray Valves Controllers in CLOSE to prevent uncontrolled Reactor Coolant System depressurization.

Proposed Answer: C

Explanation:

A. Incorrect. Plausible because this action is performed on Safeguards Bus 1EA2 but only when the Hot Shutdown Panel is manned per Attachment 1. Inadvertent breaker operation is a concern during a fire; however, not until after the Hot Shutdown Panel is manned.

B. Incorrect. Plausible because Letdown is isolated just after the TDAFW Pump is tripped, however, LCV-112A is not repositioned. Additionally, this action exacerbates rather than minimizes inventory loss.

C. Correct. This is the next action performed after the Reactor and Turbine are manually tripped and prior to exiting the Control Room. Failure to perform this action could result in overfeeding of the Steam Generators when a Safeguards Bus is deenergized.

D. Incorrect. Plausible because the fire could cause a hot short and open a Pressurizer Spray Valve, however, the RO trips the Reactor Coolant Pumps prior to exiting the Control Room.

Technical Reference(s) ABN-803A, Steps 2.3.4.c, 2.3.4.f, & 2.3.4.h
ABN-803A, Attachment 1, Step b.1)
Attached w/ Revision # See Comments / Reference

Proposed references to be provided during examination: None

Learning Objective: OPD1.ADM.FP1.OB10

ANALYZE the indications and **DESCRIBE** the mitigation strategy for the following procedures:

- ABN-803, Response to a Fire in the Control Room or Cable Spreading Room

Question Source:
Bank # ADM.FP1.OB10-1
Modified Bank # _____ (Note changes or attach parent)
New _____

Question History: Last NRC Exam _____

Question Cognitive Level:
Memory or Fundamental Knowledge X
Comprehension or Analysis _____

10 CFR Part 55 Content:
55.41 10
55.43 _____

Comments / Reference: From ABN-803A, Steps 2.3.4.c & 2.3.4.f	Revision # 8

CPNPP ABNORMAL CONDITIONS PROCEDURES MANUAL	UNIT 1	PROCEDURE NO. ABN-803A
RESPONSE TO A FIRE IN THE CONTROL ROOM OR CABLE SPREADING ROOM	REVISION NO. 8	PAGE 8 OF 63

2.3 Operator Actions

3. ☐ f. Notify Radiation Protection to provide following:

- Required dosimetry for ALL personnel at Unit 1 AND 2 Remote Shutdown Panels.
- Local monitoring at SFGD 810 North and South Penetration Rooms, Unit 1 AND 2
- Local monitoring at AB 810 Charging pumps valve room, Unit 1 AND 2

NOTE:	Steps should be performed as rapidly as possible based on operator knowledge to ensure transition to RSP and mitigation of potentially open PORV within 6 minutes.

4. Reactor Operator evacuation actions:

[C] ☐ a. Manually Trip Reactor and verify the following:

- Reactor trip and bypass breakers - OPEN
- Neutron flux - DECREASING
- All DRPI RB lights - ON

☐ b. Manually Trip Turbine.

NOTE:	The following actions should be performed prior to evacuating Control Room. Steps will be taken after Control Room evacuation to locally ensure required actions have been completed except for step e. which does not require local verification.

☐ c. Ensure 1-HS-2452-F, AFWPT TRIP - TRIPPED

☐ d. Isolate Main Steam Lines.

- 1-HS-2337A, MSL ISOL MAN ACT/RESET
- 1-HS-2337B, MSL ISOL MAN ACT/RESET

☐ e. Ensure 1/1-8202A AND 1/1-8202B, VENT VLV - CLOSED.

☐ f. CLOSE the following valves:

- 1/1-8149A, LTDN ORIFICE ISOL VLV (45 GPM)
- 1/1-8149B, LTDN ORIFICE ISOL VLV (75 GPM)
- 1/1-8149C, LTDN ORIFICE ISOL VLV (75 GPM)
- 1/1-8153, XS LTDN ISOL VLV
- 1/1-8154, XS LTDN ISOL VLV

Comments / Reference: From ABN-803A, Attachment 1, Step b.1)	Revision # 8

CPNPP ABNORMAL CONDITIONS PROCEDURES MANUAL	UNIT 1	PROCEDURE NO. ABN-803A
RESPONSE TO A FIRE IN THE CONTROL ROOM OR CABLE SPREADING ROOM	REVISION NO. 8	PAGE 26 OF 63

ATTACHMENT 1
PAGE 1 OF 6

REACTOR OPERATOR ACTIONS TO ACHIEVE HOT SHUTDOWN

☐ a. Establish communications with the following operators using channel 3 on portable two way radio. Inform Operators that Remote Shutdown Panel is manned AND verify that Attachments 2, 3 and 4 are being performed.

- Relief Reactor Operator - Attachment 2
- Nuclear Equipment Operator No. 1 - Attachment 3
- Nuclear Equipment Operator No. 2 - Attachment 4

NOTE: Attachment 13, ABN-803A Job Aid may be used to track actions of RRO, NEO 1 and NEO 2.

b. Deenergize 1EA2 as follows:

☐ 1) Transfer following controls from CR to HSP:

- 43-1EG2, DG 2 BKR 1EG2 CTRL XFER
- 43-1EA2-2, BKR 1EA2-2 CTRL XFER
- 43-1EA2-1, BKR 1EA2-1 CTRL XFER

☐ 2) Place following handswitches in PULL-OUT:

A. CS-1EG2-L, DG 2 BKR 1EG2

B. CS-1EA2-2L, INCOMING BKR 1EA2-2

C. CS-1EA2-1L, INCOMING BKR 1EA2-1

Comments / Reference: From ABN-803A, Step 2.3.4.h	Revision # 8

CPNPP ABNORMAL CONDITIONS PROCEDURES MANUAL	UNIT 1	PROCEDURE NO. ABN-803A
RESPONSE TO A FIRE IN THE CONTROL ROOM OR CABLE SPREADING ROOM	REVISION NO. 8	PAGE 9 OF 63

2.3 Operator Actions

4. ☐ g. OPEN the following valves:

- 1/1-LCV-112E, RWST TO CHRG SUCT VLV
- 1/1-LCV-112D, RWST TO CHRG SUCT VLV

☐ h. STOP Reactor Coolant Pumps.

- 1/1-PCPX1, RCP 1
- 1/1-PCPX2, RCP 2
- 1/1-PCPX3, RCP 3
- 1/1-PCPX4, RCP 4

☐ i. Place BOTH RHR pumps - PULL-OUT.

- 1/1-APRH1, RHRP 1
- 1/1-APRH2, RHRP 2

☐ j. CLOSE following valves:

- 1/1-8812A, RWST TO RHRP 1 SUCT VLV
- 1/1-8812B, RWST TO RHRP 2 SUCT VLV

☐ k. Verify SSW pumps operating.

- 1-HS-4250A, SSWP 1
- 1-HS-4251A, SSWP 2

IF SSW Pump is OFF, THEN ensure applicable DG stopped if running (Emergency Stop/Start - PULL TO LOCK)

- CS-1DG1E, DG 1 EMER STOP/START
- CS-1DG2E, DG 2 EMER STOP/START

☐ l. Proceed to Remote Shutdown Panel AND perform Attachment 1.

Examination Outline Cross-reference:	Level	RO	SRO
	Tier #	1	
	Group #	2	
	K/A #	W/E03 EK1.2	
	Importance Rating	3.6	

LOCA Cooldown-Depressurization: Knowledge of the operational implications of the following concepts as they apply to the LOCA Cooldown and Depressurization: Normal, abnormal, and emergency operating procedures associated with LOCA Cooldown and Depressurization

Proposed Question: Common 62

Given the following conditions on Unit 1:

- A Small Break Loss of Coolant Accident has occurred and EOS-1.2A, Post LOCA Cooldown and Depressurization is in progress.
- Reactor Coolant System pressure is 1500 psig.
- All Reactor Coolant Pumps are running.
- Pressurizer level is 5%.
- Letdown is NOT in service.
- The crew is ready to commence Step 14, Depressurize RCS to Refill PZR.

Which ONE (1) of the following identifies the impact of performing this step?

A. Safety Injection flow will increase.

B. Auxiliary Spray differential temperature may be exceeded.

C. Pressurizer Relief Tank pressure, level and temperature will increase.

D. Voids in the Reactor Coolant System may collapse.

Proposed Answer: A

Explanation:

A. Correct. With a Small Break LOCA in progress, depressurizing the RCS will cause SI flow to increase.
B. Incorrect. Plausible because the RNO action uses Auxiliary Spray if no Reactor Coolant Pumps were running and it might be possible to exceed Auxiliary Spray line to Pressurizer ΔT.
C. Incorrect. Plausible because the RNO action to perform this step includes opening the PORVs, however, this would only be done if normal or auxiliary spray flow were not available.
D. Incorrect. Plausible if thought that void collapse would occur during depressurization. The Note prior to Step 14 warns the operator that the Pressurizer could refill quickly due to upper head voiding if the RCPs are not running.

Technical Reference(s) EOS-1.2A, Step 14 Attached w/ Revision # See Comments / Reference

Proposed references to be provided during examination: None

Learning Objective: OP51.SYS.RC1.OB11

STATE the physical connections and **EVALUATE** the cause-effect relationship between the Reactor Coolant System and the following systems, components or events:

- Emergency Core Cooling System

Question Source:

Bank # EO1.XG3.OB400-1

Modified Bank # _____ (Note changes or attach parent)

New _____

Question History: Last NRC Exam _____

Question Cognitive Level:

Memory or Fundamental Knowledge _____

Comprehension or Analysis X

10 CFR Part 55 Content:

55.41 14

55.43 _____

Comments / Reference: From EOS-1.2A, Step 14	Revision # 8

CPSES EMERGENCY RESPONSE GUIDELINES	UNIT 1	PROCEDURE NO. EOS-1.2A
POST LOCA COOLDOWN AND DEPRESSURIZATION	REVISION NO. 8	PAGE 8 OF 68

STEP	ACTION/EXPECTED RESPONSE	RESPONSE NOT OBTAINED
	NOTE: The upper head region may void during RCS depressurization if RCPs are not running. This will result in a rapidly increasing PRZR level.	
*14	Depressurize RCS To Refill PRZR:	
	a. Use normal PRZR spray.	a. Use one PRZR PORV. IF no PORV available, THEN perform the following to use auxiliary spray: 1) Verify at least one SI pump running. IF no SI pump running, THEN go to Step 15. OBSERVE CAUTION AND NOTE PRIOR TO STEP 15. 2) Ensure at least one CCP running. IF CCW to RCP Thermal Barrier flow not available, THEN isolate RCP seal injection prior to CCP start. 3) Align CCP Miniflow Valves: A) Open CCP Miniflow Valves 1/1-8110 and 1/1-8111. B) Close CCP Alternate Miniflow Isolation Valves 1/1-8511A and 1/1-8511B. 4) Close the CCP Injection Line Isolation Valves: • 1/1-8801A • 1/1-8801B

Comments / Reference: From EOS-1.2A, Step 14	Revision # 8

CPSES EMERGENCY RESPONSE GUIDELINES	UNIT 1	PROCEDURE NO. EOS-1.2A
POST LOCA COOLDOWN AND DEPRESSURIZATION	REVISION NO. 8	PAGE 9 OF 68

STEP	ACTION/EXPECTED RESPONSE	RESPONSE NOT OBTAINED
		5) Open Charging Line Isolation Valves 1/1-8105 and 1/1-8106. 6) Establish Auxiliary Spray.
	b. PRZR LEVEL - GREATER THAN 30% (50% FOR ADVERSE CONTAINMENT)	b. Continue with Step 15. OBSERVE CAUTION <u>AND</u> NOTE PRIOR TO STEP 15. <u>WHEN</u> level greater than 30% (50% FOR ADVERSE CONTAINMENT), <u>THEN</u> do Step 14c.
	c. Stop RCS depressurization.	

Examination Outline Cross-reference:	Level	RO	SRO
	Tier #	1	
	Group #	2	
	K/A #	W/E08 EA1.3	
	Importance Rating	3.6	

RCS Overcooling-PTS: Ability to operate and/or monitor the following as they apply to the Pressurized Thermal Shock: Desired operating results during abnormal and emergency situations

Proposed Question: Common 63

FRP-0.1A, Response to Imminent Pressurized Thermal Shock Condition directs the operator to check if ECCS can be terminated.

Which ONE (1) of the following actions is correct with respect to this step?

A. ECCS flow should not be terminated until adequate PRZR level is established to support restarting a RCP.

B. Monitor CET temperature to determine if adequate RCS inventory exists such that core cooling is ensured.

C. Emergency Core Cooling System flow must be terminated to stabilize RCS Hot Leg temperature.

D. Subcooling and PRZR level must be closely monitored because Safety Injection termination criteria are more restrictive in this procedure.

Proposed Answer: B

Explanation:

A. Incorrect. Plausible because starting an RCP could be a desired action, however, the concerns are adequate inventory and sub cooling.
B. Correct. Core inventory and adequate subcooling are requirements that must be met prior to SI termination.
C. Incorrect. Plausible because flow may need to be terminated, however, the reason is not that listed.
D. Incorrect. Plausible because these are the two criteria that must be met for SI flow to be terminated, however, they are less restrictive than other Functional Recovery Procedures.

Technical Reference(s) FRP-0.1A, Attachment 4, Step 7 Bases — Attached w/ Revision # See Comments / Reference

Proposed references to be provided during examination: None

Learning Objective: LO41.FRP.XH1.OB01 — Given a major action step of FRP-0.1A/B or FRP-0.2A/B, **STATE** the basis for the step.

Question Source: Bank # FRP.XH4.OB401-1
Modified Bank # _____ (Note changes or attach parent)
New _____

Question History: Last NRC Exam _____

Question Cognitive Level: Memory or Fundamental Knowledge _____
Comprehension or Analysis X

10 CFR Part 55 Content: 55.41 10
55.43 _____

Comments / Reference: From FRP-0.1A, Attachment 4, Step 7 Bases	Revision # 8

STEP 7: Following SI actuation, RCS conditions may be restored to within acceptable limits for SI termination to be allowed. The combination of a minimum subcooling and sufficient liquid level in the vessel to cover the core represents less restrictive SI termination criteria in this procedure than those present in the ERGs since, for an imminent PTS condition, ECCS flow may have contributed to the RCS cooldown or may prevent a subsequent reduction in RCS pressure.

Comments / Reference: From FRP-0.1A, Attachment 4, Step 7 Bases	Revision # 8

CPSES EMERGENCY RESPONSE GUIDELINES	UNIT 1	PROCEDURE NO. FRP-0.1A
RESPONSE TO IMMINENT PRESSURIZED THERMAL SHOCK CONDITION	REVISION NO. 8	PAGE 34 OF 53

ATTACHMENT 4
PAGE 4 OF 23

BASES

The subcooling criterion will ensure subcooled conditions and the RVLIS indication or decreasing Core exit TCs ensure the existence of an adequate vessel inventory such that core cooling is ensured.

If either of the termination criteria are not satisfied, then SI is required to ensure core cooling and should not be terminated. Most likely the cold leg/downcomer low temperature condition is due to ECCS water mixing effects and an RCP restart is attempted. Of the transients considered in PTS, the SBLOCA transient may result in a condition whereby ECCS flow cannot be terminated. A range of SBLOCAs were identified where continued RCP operation or conversely untimely RCP restart could result in increased RCS inventory loss. The loss of additional inventory could ultimately result in deeper core uncovery transients which could in turn result in fuel cladding temperatures in excess of the plant's design basis FSAR analysis result. Therefore, from a SBLOCA standpoint, RCP restart at an inopportune time could result in a degraded core cooling scenario.

Numerous transient analyses including those of SBLOCA have been analyzed without RCP restart. The results of the stagnant loop evaluation demonstrate that the total expected frequency of significant flaw extension in a typical Westinghouse PWR reactor vessel due to PTS, including the contributions from stagnant loop SBLOCA transients, does not exceed the NRC required RTPTS screening value of 270°F for axial flaws. Therefore, based on analysis results, RCP restart is not required to meet the NRC PTS risk goal for a typical Westinghouse plant.

RCS subcooling, in addition to minimum support conditions is recommended to assure that no potential RCS inventory aggravation will occur due to RCP restart.

An analysis of the effect of an RCP restart has been made to ensure the safety of this action relative to vessel integrity. For conservatism in the analysis the assumption was made that a small pre-existing flaw had grown and arrested at 75 percent of wall thickness before RCP start. Starting an RCP was shown not to result in any further flaw propagation and loss of vessel integrity. For a case where a flaw has not grown prior to RCP start the subsequent heat-up of the downcomer region will decrease the possibility of flaw initiation.

Comments / Reference: From FRP-0.1A, Attachment 4, Step 7 Bases	Revision # 8

CPSES EMERGENCY RESPONSE GUIDELINES	UNIT 1	PROCEDURE NO. FRP-0.1A
RESPONSE TO IMMINENT PRESSURIZED THERMAL SHOCK CONDITION	REVISION NO. 8	PAGE 36 OF 53

ATTACHMENT 4
PAGE 6 OF 23

BASES

Due to the less restrictive SI termination and reinitiation criteria provided in this procedure, the operator should be especially alert for any decrease in RCS subcooling or vessel level that warrants SI reinitiation.

Examination Outline Cross-reference:	Level	RO	SRO
	Tier #	1	
	Group #	2	
	K/A #	W/E06 & E07 EK2.2	
	Importance Rating	3.5	

Inadequate Core Cooling: Knowledge of the interrelations between the Saturated Core Cooling and the following: Facility's heat removal systems, including primary coolant, emergency coolant, the decay heat removal systems, and relations between the proper operation of the these systems to the operation of the facility

Proposed Question: Common 64

Which ONE (1) of the following identifies why Reactor Coolant Pump #4 is stopped if all other Reactor Coolant Pumps are running during a Degraded Core Cooling event?

Reactor Coolant Pump #4...

A. will not provide adequate RCS loop flow under these conditions.

B. is more likely to be damaged under highly voided RCS conditions.

C. provides the best Pressurizer spray flow in single pump operation.

D. provides the best RCS loop flow in single pump operation.

Proposed Answer: C

Explanation:

A. Incorrect. Plausible because two-phase flow could exist during Degraded Core Cooling conditions, however, the reason is to preserve Reactor Coolant Pump #4 for future use of Pressurizer Spray.
B. Incorrect. Plausible because two-phase flow could create a condition where the RCP could be damaged due to not meeting NPSH requirements, however, Reactor Coolant Pump #4 is preserved for future Pressurizer Spray consideration.
C. Correct. Reactor Coolant Pump #4 has the Pressurizer Spray Line and Surge Line connected on its respective Cold and Hot Legs allowing for the most effective spray flow.
D. Incorrect. Plausible because each RCP will have different characteristics based on flow through its respective Steam Generator, however, the reason Reactor Coolant Pump #4 is used is based on Pressurizer Spray flow.

Technical Reference(s): FRC-0.1A, Step 7; FRC-0.1A, Attachment 4, Step 7 — Attached w/ Revision # See Comments / Reference

Proposed references to be provided during examination: None

Learning Objective: LO21.ERG.FC1.OB02 — **DESCRIBE** reasons and methodology used with steps taken during FRC-0.1.

Question Source: Bank # SM3.XH4.OB104-2
Modified Bank # _____ (Note changes or attach parent)
New _____

Question History: Last NRC Exam _____

Question Cognitive Level: Memory or Fundamental Knowledge X
Comprehension or Analysis _____

10 CFR Part 55 Content: 55.41 10
55.43 _____

Comments / Reference: From FRC-0.1A, Step 7	Revision # 8

CPSES EMERGENCY RESPONSE GUIDELINES	UNIT 1	PROCEDURE NO. FRC-0.2A
RESPONSE TO DEGRADED CORE COOLING	REVISION NO. 8	PAGE 10 OF 33

STEP	ACTION/EXPECTED RESPONSE	RESPONSE NOT OBTAINED
	CAUTION: RCS letdown or RCP seal return to VCT should not be initiated if core damage is suspected or is imminent unless recommended by Plant Staff.	
5	Check RCP Status:	
	a. At least one RCP - RUNNING	a. Go to Step 6.
	b. Check RCP Support Conditions - AVAILABLE PER ATTACHMENT 3	b. Establish support conditions for the operating RCP(s).
6	Check Core Cooling:	
	a. Core exit TCs - LESS THAN 750°F	a. IF decreasing, THEN return to Step 1. IF NOT, THEN go to Step 7.
	b. RVLIS indication - GREATER THAN OR EQUAL TO 11 IN ABOVE CORE PLATE LIGHT LIT	b. IF core exit TCs stable or decreasing, THEN return to procedure and step in effect. IF NOT, THEN return to Step 1.
	c. Return to procedure and step in effect.	
7	Check If One RCP Should Be Stopped:	
	a. All RCPs - RUNNING	a. Go to Step 8.
	b. Stop RCP in loop 4.	

Comments / Reference: From FRC-0.1A, Attachment 4, Step 7	Revision # 8

STEP 7: Since RCP damage may result from continuous operation under highly voided RCS conditions, it is desirable to have one RCP reserved for future use. However, the operator should stop the RCP in loop 4 only if all other RCPs are running. The loop that provides the most effective spray flow is Loop 4 with connections to the PRZR via a spray line and the surge line; therefore, RCP 4 is stopped.

Examination Outline Cross-reference:	Level	RO	SRO
	Tier #	1	
	Group #	2	
	K/A #	036 AA1.04	
	Importance Rating	3.1	

Fuel Handling Accident: Ability to operate and/or monitor the following as they apply to the Fuel Handling Incidents: Fuel handling equipment during an incident

Proposed Question: Common 65

While performing as a team member for new fuel receipt, a new fuel assembly's cladding is damaged by the railing while being lowered into the new fuel inspection station.

Which ONE (1) of the following describes the appropriate operator response per ABN-908, Fuel Handling Accident?

A. Evacuate the area except for personnel needed to return the assembly to its shipping cask for inspection and return to the fuel vendor.

B. Stop any further movement of that assembly and contact Core Performance Engineering to determine assembly disposition.

C. Start additional Primary Plant Supply and Exhaust fans, raise the fuel assembly clear of railing, re-orient before lowering, and continue the new fuel inspection.

D. Notify Radiation Protection of the incident, secure the fuel assembly to prevent further damage, and ensure personnel exit the adjacent area.

Proposed Answer: D

Explanation:

A. Incorrect. Plausible because personnel should exit the adjacent area, however, returning the assembly to its shipping cask is not desired.
B. Incorrect. Plausible because at some point Core Performance Engineering will have to inspect the assembly, however, the assembly must be secured to prevent further damage.
C. Incorrect. Plausible if thought that scraping the cladding on the assembly is acceptable to continue with the inspection. Starting additional fans would be desired to filter the air.
D. Correct. This is the correct set of actions per ABN-908. Radiation Protection is notified to ensure that no contamination has occurred even though this is a new fuel assembly.

Technical Reference(s) ABN-908, Section 4.3 Attached w/ Revision # See Comments / Reference

Proposed references to be provided during examination: None

Learning Objective: OP51.RFO.FH5.OB16 — Given a specific fuel handling accident, be able to **OUTLINE** the Initial Operator Actions per ABN-908.

Question Source:
- Bank # RFO.SYE.OB404-3
- Modified Bank # _____ (Note changes or attach parent)
- New _____

Question History: Last NRC Exam _____

Question Cognitive Level:
- Memory or Fundamental Knowledge _____
- Comprehension or Analysis X

10 CFR Part 55 Content:
- 55.41 10, 12
- 55.43 _____

Comments / Reference: From ABN-908, Section 4.3	Revision # 4

CPSES ABNORMAL CONDITIONS PROCEDURES MANUAL	UNIT 1 AND 2	PROCEDURE NO. ABN-908
FUEL HANDLING ACCIDENT	REVISION NO. 4	PAGE 12 OF 13

4.3 Operator Actions

ACTION/EXPECTED RESPONSE	RESPONSE NOT OBTAINED

☐ 1 Notify Shift Manager of incident and locations.

2 Evacuate the area adjacent to the damaged fuel assembly as follows:

☐ a. Announce the evacuation over the Gai-tronics.

Example Announcement:

THIS IS NOT A DRILL. ATTENTION ALL PERSONNEL IN THE FUEL BUILDING. EVACUATE THE AREA ADJACENT TO THE [DAMAGED ASSEMBLY LOCATION, e.g. New Fuel Storage Racks, elevator, inspection stand]. THIS IS NOT A DRILL.

☐ b. Repeat the announcement.

☐ 3 Refer to EPP-201.

☐ 4 Notify Radiation Protection of incident AND ensure that all personnel who were in the area adjacent to accident are being surveyed for possible contamination.

NOTE: Access to accident area shall require Shift Manager authorization.

☐ 5 Direct Security to control access to area adjacent to accident.

6 The Fuel Handling Supervisor shall perform the following:

☐ • Secure the fuel assembly to prevent further damage.

☐ • Ensure personnel exit the area adjacent to the accident.

☐ • Keep unauthorized personnel from the area until relieved by Security.

CAUTION: Fuel Assemblies shall NOT be lifted with special tools prior to a thorough evaluation. This evaluation shall ensure that the fuel assembly is adequately supported prior to using any special tool.

☐ 7 WHEN deemed safe by Radiation Protection, THEN initiate actions to recover and contain the damaged fuel assembly.

End of Section

Examination Outline Cross-reference:

Level	RO	SRO
Tier #	3	
Group #	1	
K/A #	G 2.1.3	
Importance Rating	3.7	

Conduct of Operations: Knowledge of shift or short-term relief turnover practices

Proposed Question: Common 66

Given the following conditions:

- You are on watch in the Control Room as the BOP with both Units at 100% power.
- Shifts are 12 hours long and all shifts are manned to the minimum composition of ODA-102, Conduct of Operations.
- Your relief is not on site for Shift Turnover.

Which ONE (1) of the following describes the procedural guidance in this situation?

Shift composition may...

A. NOT drop below the minimum unless an operator exceeds 12 hours on watch. Turnover your watch station to the on-coming RO and depart.

B. NOT drop below the minimum as a result of an on-coming watch stander being absent. Remain on watch.

C. be one less than the minimum for two hours while attempting to find a replacement. Turnover your watch station to the on-coming RO and attempt to contact a replacement.

D. be one less than the minimum for two hours. Turnover your watch station to the on-coming RO but remain on site in standby until a replacement is found.

Proposed Answer: B

Explanation:

A. Incorrect. Plausible because 12 hours is the maximum shift time excluding turnover, however, because the oncoming shift member is late or absent the position should not be unmanned.
B. Correct. Per the guidance in ODA-102, Item #13.
C. Incorrect. Plausible because shift composition can be one less than minimum for two hours, however, this does not apply when an oncoming shift member is late or absent.
D. Incorrect. Plausible because shift composition can be one less than minimum for two hours, however, this does not apply when an oncoming shift member is not yet present.

Technical Reference(s) ODA-102, Attachment 8A, Item #13 Attached w/ Revision # See Comments / Reference

Proposed references to be provided during examination: None

Learning Objective: OPD1.ADM.XA1.OB02 **CONDUCT** shift relief and turnover in accordance with station procedures; **VERIFYING** that an adequate number of qualified personnel are available for turnover and **ENSURING** that all personnel are properly relieved.

LO21.RLS.SL1.OB17 **RECOGNIZE** the conditions under which the Operations crew may be less than the minimum requirement.

Question Source: Bank # ADM.XA3.OB01-7
Modified Bank # _____ (Note changes or attach parent)
New _____

Question History: Last NRC Exam _____

Question Cognitive Level: Memory or Fundamental Knowledge _____
Comprehension or Analysis X

10 CFR Part 55 Content: 55.41 10
55.43 _____

Comments / Reference: From ODA-102, Attachment 8A	Revision #

CPSES OPERATIONS DEPARTMENT ADMINISTRATION MANUAL		PROCEDURE NO. ODA-102
CONDUCT OF OPERATIONS	REVISION NO. 24	PAGE 30 OF 32

ATTACHMENT 8.A
PAGE 1 OF 3

[C]MINIMUM SHIFT CREW COMPOSITION

MODE	MANNING
ONE OR BOTH UNITS IN MODE 1, 2, 3 OR 4 (4) (6) (7) (8) (9) (10) (11) (12) (13) (16)	1 SM (5) 3 US/STA (3) 1 FSS (14) 4 RO 7 NEO (2) 2 RP TECH 1 CHEM TECH 1 FIRST AID TEAM MEMBER 1 MECH 1 ELEC 1 I&C TECH 1 CR COMM (15)
TOTAL	25
BOTH UNITS IN MODE 5 OR 6 (4) (7) (9) (11) (12) (13) (16)	1 SM (5) 2 US/STA (3) 1 FSS (14) 2 RO 6 NEO (2) 2 RP TECH 1 CHEM TECH 1 FIRST AID TEAM MEMBER 1 MECH 1 ELEC 1 I&C TECH 1 CR COMM (15)
TOTAL	19

POSITION (1)	USNRC LICENSE
SHIFT MANAGER	SRO
UNIT SUPERVISOR	SRO
FIELD SUPPORT SUPERVISOR	NONE
REACTOR OPERATOR	RO
NUCLEAR EQUIPMENT OPERATOR	NONE
SHIFT TECHNICAL ADVISOR	(3)

[C] (1) Any qualified and USNRC SRO Licensed member of management may be used to satisfy the minimum SM or US requirement. Any qualified and USNRC Licensed individual may be used to satisfy the RO requirement.

Comments / Reference: From ODA-102, Attachment 8A	Revision # 24

CPSES OPERATIONS DEPARTMENT ADMINISTRATION MANUAL		PROCEDURE NO. ODA-102
CONDUCT OF OPERATIONS	REVISION NO. 24	PAGE 31 OF 32

ATTACHMENT 8.A
PAGE 2 OF 3

[C]MINIMUM SHIFT CREW COMPOSITION

[C] (3) The STA position shall be manned in all Modes unless the SM or US meets the qualifications described in Option 1 of the Commission Policy Statement on Engineering Expertise (50FR 43621, October 28, 1985) and has dose assessment capability. The SM shall not fulfill the duties as Emergency Coordinator and dose assessor concurrently. The STA position shall be manned as follows:

- three USs, one of which is STA qualified, or
- two STA qualified USs, or
- two USs and a separate STA qualified individual.

[C] (4) The minimum on-duty shift complement shall not be less than that described in the CPSES Technical Specifications, Section 5 and FSAR Table 13.1-2. Minimum staffing is also the subject of requirements from Technical Specifications, Section 5.2.2 and FSAR Section 13.1.2.3.

[C] (5) A USNRC SRO Licensed SM shall be onsite at all times when at least one unit is loaded with fuel. When the SM is absent from the Control Room during routine operations, he shall be relieved by a USNRC active SRO Licensed member of management. This is normally a US. The SMs relief shall assume the Control Room command function.

[C] (6) One USNRC SRO Licensed Operator shall be in the Control Room at all times when either unit is in MODES 1, 2, 3 or 4.

[C] (7) One USNRC Licensed Operator shall be in the Control Room at all times for each reactor containing fuel.

(8) Two USNRC Licensed Operators should be in the Control Room for each reactor while undergoing a startup, shutdown or reactor trip recovery.

[C] (9) Two USNRC SRO Licensed Operators shall be onsite at all times when both units are loaded with fuel.

[C] (10) In addition to the operators specified in (5), (6), (7) and (9), an additional USNRC Licensed Operator shall be onsite at all times and available to serve as relief operator for the Control Room if either unit is in MODE 1, 2, 3 or 4.

[C] (11) Operations shift crew assignments during periods of core alterations shall include a USNRC SRO Licensed Operator to directly supervise the core alterations. This operator may have fuel handling duties but shall have no other concurrent operational duties.

[C] (12) A site Fire Brigade of at least five members shall be maintained onsite at all times. The Fire Brigade shall not include the SM and the four other members of the minimum Operations shift crew necessary for safe shutdown of the unit and any personnel required for other essential functions during a fire emergency. The Fire Brigade may be less than the minimum requirements for a period of time not to exceed 2 hours to accommodate unexpected absence, provided immediate action is taken to fill the required positions.

Comments / Reference: From ODA-102, Attachment 8A	Revision # 24

CPSES OPERATIONS DEPARTMENT ADMINISTRATION MANUAL		PROCEDURE NO. ODA-102
CONDUCT OF OPERATIONS	REVISION NO. 24	PAGE 32 OF 32

ATTACHMENT 8.A
PAGE 3 OF 3

[C]MINIMUM SHIFT CREW COMPOSITION

[C] (13) The Operations shift crew composition may be one less than the minimum requirements for a period of time not to exceed 2 hours in order to accommodate unexpected absence of on-duty shift crew members provided immediate action is taken to restore the shift crew composition to within the minimum requirements. This provision does not permit any shift crew position to be unmanned upon shift change due to an oncoming shift crewman being late or absent.

[C] (14) The FSS position may be filled by an SRO provided minimum shift manning requirements are met for SROs. The FSS position may remain temporarily unfilled with Operations Management's approval.

(15) Two Control Room Communicators (CR COMM) shall be onsite at all times. One communicator shall be an individual trained and qualified in Emergency Plan communications with no additional duties during accident conditions. The second communicator is any onsite individual judged qualified by the SM and possessing sufficient plant knowledge to be able to communicate plant status information effectively to the NRC via the ENS during the initial phases of a declared emergency. The second communicator may be part of the shift manning and may perform additional duties as required during accident conditions.

[C] (16) In addition to the requirements specified above for the Control Room Communicator, at least a mechanic (MECH), an electrician (ELEC), an I&C technician (I&C TECH), two Radiation Protection (RP TECH) technicians, a Chemistry (CHEM TECH) technician and a First Aid Team Member shall be onsite at all times. These positions fulfill the requirements of Technical Specifications 5.2.2 and Table 1.1 of the Emergency Plan. The CHEM TECH and RP TECH positions may be unmanned for a period of time not to exceed 2 hours in order to accommodate unexpected absence, provided immediate action is taken to fill the required positions. This provision does not permit any position to be unmanned upon shift change due to an oncoming crewman being late or absent.

Examination Outline Cross-reference:

Level	RO	SRO
Tier #	3	
Group #	1	
K/A #	G 2.1.17	
Importance Rating	3.9	

Conduct of Operations: Ability to make accurate, clear, and concise verbal reports

Proposed Question: Common 67

Which ONE (1) of the following conditions identifies how radio communication of breaker tag number 1EB2-1/5M/BKR should be performed?

A. One E B Two Dash One Breaker Five Mike.

B. One Edward Boy Two Dash One Breaker Five Mary.

C. One Easy Boston Two Dash One Breaker Five Mary.

D. One Echo Bravo Two Dash One Breaker Five Em.

Proposed Answer: A

Explanation:
A. Correct. Consistent with the NATO phonetic alphabet used at CPNPP.
B. Incorrect. Plausible because this is consistent with communications used by Police Departments.
C. Incorrect. Plausible because this is consistent with communications used by Western Union.
D. Incorrect. Plausible because most phonetic alphabet usage is correct with the exception of Mike.

Technical Reference(s) NMG-114, Site Verbal Communication Guide
NMG-114, Attachment 1
Attached w/ Revision # See Comments / Reference

Proposed references to be provided during examination: None

Learning Objective:
OPD1.ADM.XA1.OB07 **OPERATE** the plant under the guidance of the appropriate administrative procedures; **CONDUCTING** routine watchstanding evolutions and **MAINTAINING** system status and plant configuration control.

OPD1.ADM.XAD.OB07 Given that a system is being returned to service following maintenance, **DESCRIBE** the required actions when performing a breaker (electrical) Lineup and an Independent Verification of the Lineup in accordance with STA-694, OWI-208 and the appropriate System Operating Procedures.

Question Source:
Bank # ADM.XAD.OB900-1
Modified Bank # _____ (Note changes or attach parent)
New _____

Question History: Last NRC Exam _____

Question Cognitive Level: Memory or Fundamental Knowledge X
Comprehension or Analysis _____

10 CFR Part 55 Content: 55.41 10
55.43 _____

Comments / Reference: From NMG-114, Site Verbal Communication Guide	Revision # 07/18/07

- Regarding **COMMUNICATION OF EQUIPMENT DESIGNATION,** the use of unit designators is not required for face-to-face communications in the control room between personnel assigned to that unit. Communication of activities via the radio, telephone or gaitronics SHOULD ALWAYS use unit designators. When communicating equipment information, use the appropriate nomenclature necessary to avoid confusion (e.g., 1MS-0019, Unit #1 MSIV #1, 2-01 CEV Pump, 1-FCV-0510 - #1 Steam Generator Feed Control Valve).

- A **PHONETIC ALPHABET** is used to enhance verbal communication when using identifiers containing letters. The purpose of the phonetic alphabet is to improve communication accuracy. Additionally, the phonetic alphabet should be used when the last character or the only character of a component or procedure is a letter. Attachment 1 identifies the phonetic alphabet that should be used in place of letter designators, as follows:
  1. Any letter that stands alone or is located at the end of an identifier (i.e. "Train Alpha" or "X-FV-2589Bravo"). An exception to this is "Phase A Isolation" and "Phase B Isolation" which do not sound alike and therefore cannot result in confusion.
  2. When specifying train, electrical phase, and channel designations.
  3. When the sender or receiver might misunderstand, such as sound-alike systems, high noise areas, poor reception during radio and telephone communications.

Comments / Reference: From NMG-114, Attachment 1	Revision # 07/18/07

Attachment 1

PHONETIC ALPHABET

This phonetic alphabet may be used when alphanumeric information is being communicated to minimize misinterpretation.

A - Alpha	**J - Juliet**	**S - Sierra**
B - Bravo	**K - Kilo**	**T - Tango**
C - Charlie	**L - Lima**	**U - Uniform**
D - Delta	**M – Mike**	**V - Victor**
E - Echo	**N - November**	**W - Whiskey**
F - Foxtrot	**O - Oscar**	**X - X-ray**
G - Golf	**P - Papa**	**Y - Yankee**
H - Hotel	**Q - Quebec**	**Z - Zulu**
I – India	**R – Romeo**	

Numerical data should be stated in a manner that minimizes misinterpretation. Normally this means reading whole numbers. For example, 1679.3 should be stated as "one thousand six hundred seventy nine point three", or “sixteen seventy-nine point three.” The number may also be repeated digit by digit if further clarity is desired. (i.e.: "That is one-six-seven-nine-point three").

Note that digit by digit communication used alone for complex numbers could be confusing.

Examination Outline Cross-reference:	Level	RO	SRO
	Tier #	3	
	Group #	2	
	K/A #	G 2.2.1	
	Importance Rating	4.5	

Equipment Control: Ability to perform pre-startup procedures for the facility, including operating those controls associated with plant and equipment that could affect reactivity

Proposed Question: Common 68

Given the following conditions with a Reactor Startup is in progress at EOL:

- Control Rods are in MANUAL.
- Reactor Power is 5%.
- Intermediate Range startup rate is 0 DPM.
- Steam Dump System is in the STEAM PRESSURE mode.
- PK-507, Steam Dump Pressure Controller is in AUTO with a setting of 6.86.

Which ONE (1) of the following would occur if PK-507, Steam Dump Pressure Controller potentiometer setting were to be changed to 7.20?

T_{avg} would _____ and Reactor power would _____.

A. decrease; increase

B. increase; decrease

C. increase; increase

D. decrease; decrease

Proposed Answer: B

Explanation:

A. Incorrect. Plausible if thought that raising the potentiometer setpoint of the Steam Dump Pressure Controller would cause controlling steam pressure to lower. This would open the Steam Dump Valves and cause power increase.

B. Correct. Placing the Steam Dump Pressure Controller at a potentiometer setting of 7.02 would raise the controlling pressure in the Steam Generators (>1092 psig which corresponds to a potentiometer setting of 6.86; see REMARKS section of TDM graph) and hence, raise Tavg. With the core at end-of-life conditions and above the point of adding heat, negative reactivity is inserted and power will decrease.

C. Incorrect. Plausible because raising the potentiometer setpoint will cause Tavg to increase. If the core were at BOC conditions, positive reactivity would be inserted and power would increase.

D. Incorrect. Plausible if thought that raising the potentiometer setpoint of the Steam Dump Pressure Controller would cause controlling steam pressure to lower. If the core were at BOC conditions, negative reactivity would be inserted and power would decrease.

Technical Reference(s): OP51.SYS.SD1.LN, Page 14 & 18
Technical Data Manual Figure for 1-PK-507
Attached w/ Revision # See Comments / Reference

Proposed references to be provided during examination: None

Learning Objective: OP51.SYS.SD1.OB07

STATE the location (if applicable) of the following indications and controls, and **DESCRIBE** how each is interpreted or used to predict, monitor, or control changes in the Steam Dump System:

- Steam Dump Controllers, Setpoint Adjustment, and Demand indication

Question Source:
Bank # SYS.SD1.OB12-9
Modified Bank # _____ (Note changes or attach parent)
New _____

Question History: Last NRC Exam _____

Question Cognitive Level:
Memory or Fundamental Knowledge _____
Comprehension or Analysis X

10 CFR Part 55 Content:
55.41 1, 5, 7
55.43 _____

Comments / Reference: From OP51.SYS.SD1.LN, Page 14	Revision # 10/16/02

STEAM DUMP PRESSURE CONTROLLER (U-PK-507)

The Steam Dump Pressure Controller is a Westinghouse type M/A Station. The station is equipped with a ten-turn potentiometer which is used to adjust the automatic set point at which the Steam Dump System maintains SG pressure. The station also contains four pushbuttons. The bottom push-button (amber) is used to transfer the M/A Station to manual control. The next to the bottom button (green) is used to manually reduce the demand signal sent to the Steam Dump Valve I/P converter. The third button up (red) is used to manually increase the demand signal sent to the Steam Dump I/P converter. The top button (white) is used to transfer the M/A Station to its automatic control which uses the setting of the ten-turn potentiometer as a reference point for SG pressure.

Comments / Reference: From OP51.SYS.SD1.LN, Page 18	Revision # 10/16/02

During a unit startup, the Steam Dump System is placed into operation when RCS reaches approximately 330°F. When placed in operation, the Steam Dump Mode Selector Switch is in the "STEAM PRESSURE" position and the M/A Station is operated in its Manual mode. The operator manually positions the three cool down valves to maintain Reactor Coolant System temperature or control the rate of change of temperature. The system remains in this condition until RCS temperature has reached 557°F. At this temperature the heat up is stopped and the M/A Station is adjusted to maintain steam pressure in the SG's at 1092 psig. This SG pressure corresponds to a RCS temperature of 557°F.

The M/A Station is adjusted to maintain steam pressure by adjusting the potentiometer set point and placing the controller in its automatic mode. The Steam Dump System will continue to operate in this manner until a secondary plant startup is commenced.

Comments / Reference: From Technical Data Manual Figure for 1-PK-507	Revision # 5

CPSES TECHNICAL DATA MANUAL	UNIT 1	PROCEDURE NO. TDM-501A
SG - FEEDWATER CONTROLLER DATA	REVISION NO. 5	PAGE 12 OF 21

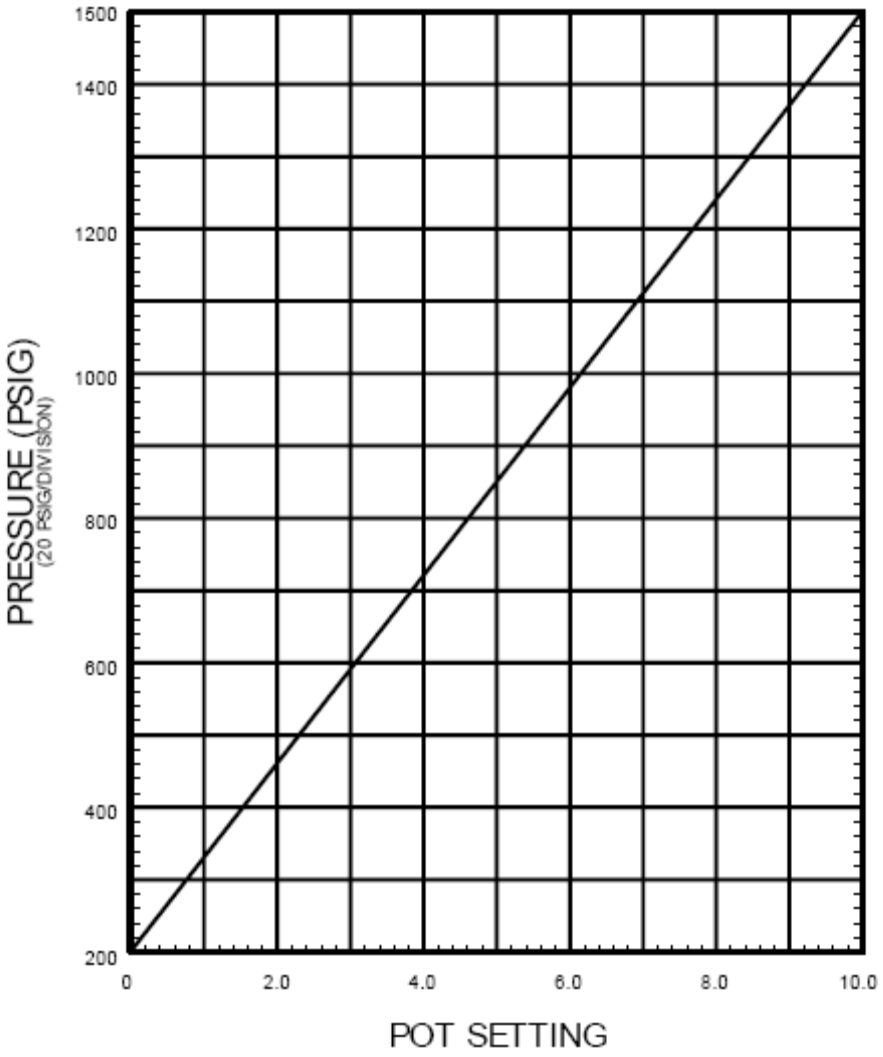

Parameter Indicator: 1-PI-507, MS HDR PRESS [L]
Indicator Range: 200-1500 psig

REMARKS

1. Controls dump valves 1-PV-2369A, B, & C and 1-TV-2370A, B, C, D, E, F, G, H, & J.
2. 1-PK-507 only controls the dumps when the Steam Dump Selector Switch is in the STM PRESS mode.
3. Normal setpoint is 1092 psig at POT Setting of 6.86.

Examination Outline Cross-reference:

Level	RO	SRO
Tier #	3	
Group #	2	
K/A #	G 2.2.40	
Importance Rating	3.4	

Equipment Control: Ability to apply Technical Specifications for a system

Proposed Question: Common 69

During MODE 2 operations, which ONE (1) of the following equipment out-of-service configurations on Emergency Core Cooling System equipment would result in entry into Technical Specification Limiting Condition for Operation, 3.0.3?

A. Train A Centrifugal Charging Pump and Train B Residual Heat Removal Pump.

B. Train A Safety Injection Pump and Train B Safety Injection Pump.

C. Train A Centrifugal Charging Pump and Train B Safety Injection Pump.

D. Train A Centrifugal Charging Pump and Train A Safety Injection Pump.

Proposed Answer: B

Explanation:

A. Incorrect. Plausible because a CCP in one Train and RHR Pump in the other Train are INOPERABLE, however, this condition does not require LCO 3.0.3 entry.
B. Correct. With both Safety Injection Pumps out of service 2 Train OPERABILITY is not met per the LCO.
C. Incorrect. Plausible because a CCP in one Train and a SIP in the other Train are INOPERABLE, however, this condition does not require LCO 3.0.3 entry.
D. Incorrect. Plausible because a CCP and a SIP are INOPERABLE in the same Train, however, this condition does not require LCO 3.0.3 entry.

Technical Reference(s): Tech Spec LCO 3.5.2; Tech Spec LCO 3.0.3 — Attached w/ Revision # See Comments / Reference

Proposed references to be provided during examination: None

Learning Objective: LO21.RLS.SL1.OB12 — Given a Technical Specification or a Technical Specification situation, **DIAGNOSE** the situation and **APPLY** the LCO and SR Applicability of Section 3.0 to **DETERMINE** all corrective actions.

Question Source:
Bank # RLS.SL1.OB08-18
Modified Bank # _____ (Note changes or attach parent)
New _____

Question History: Last NRC Exam _____

Question Cognitive Level: Memory or Fundamental Knowledge _____
Comprehension or Analysis X

10 CFR Part 55 Content: 55.41 10
55.43 _____

Comments / Reference: From Tech Spec LCO 3.5.2	Amendment # 64

3.5.2 ECCS — Operating

LCO 3.5.2 Two ECCS trains shall be OPERABLE.

----------NOTES----------

1. In MODE 3, both safety injection (SI) pump flow paths may be isolated by closing the isolation valves for up to 2 hours to perform pressure isolation valve testing per SR 3.4.14.1.

2. Operation in MODE 3 with ECCS pumps made incapable of injecting, pursuant to LCO 3.4.12, "Low Temperature Overpressure Protection (LTOP) System," is allowed for up to 4 hours or until the temperature of all RCS cold legs exceeds 375°F, whichever comes first.

APPLICABILITY: MODES 1, 2, and 3

Comments / Reference: From Tech Spec LCO 3.0.3	Amendment # 64

LCO 3.0.3

When an LCO is not met and the associated ACTIONS are not met, an associated ACTION is not provided, or if directed by the associated ACTIONS, the unit shall be placed in a MODE or other specified condition in which the LCO is not applicable. Action shall be initiated within 1 hour to place the unit, as applicable, in:

a. MODE 3 within 7 hours;

b. MODE 4 within 13 hours; and

c. MODE 5 within 37 hours.

Exceptions to this Specification are stated in the individual Specifications.

Where corrective measures are completed that permit operation in accordance with the LCO or ACTIONS, completion of the actions required by LCO 3.0.3 is not required.

LCO 3.0.3 is only applicable in MODES 1, 2, 3, and 4.

Examination Outline Cross-reference:

Level	RO	SRO
Tier #	3	
Group #	3	
K/A #	G 2.3.7	
Importance Rating	3.5	

Radiation Control: Ability to comply with radiation work permit requirements during normal or abnormal conditions

Proposed Question: Common 70

Which ONE (1) of the following would meet the minimum requirement for entry into a High Radiation Area (dose rates do not exceed 1.0 REM/hour at 30 centimeters) per Technical Specifications, Section 5.7, High Radiation Area?

Individual is entered on a valid Radiation Work Permit and...

A. has a monitoring device which continuously displays area radiation dose rate.

B. is continuously under the surveillance of a Radiation Protection Technician equipped with a self-reading dosimeter.

C. is accompanied by a Radiation Protection Technician with a neutron radiation monitoring instrument.

D. has a monitoring device which updates individual dose record program.

Proposed Answer: A

Explanation:

A. Correct. Per Technical Specification Section 5.7, this is one of the requirements to enter a High Radiation Area.
B. Incorrect. Plausible because a Radiation Protection Technician can monitor an individual in a High Radiation Area, however, the RP Tech must have a monitoring device that continuously displays area dose rate and the individual must be wearing a self-reading dosimeter.
C. Incorrect. Plausible because a Radiation Protection Technician can monitor individuals in a High Radiation Area, however, additional requirements and monitoring instruments are needed.
D. Incorrect. Plausible because dose is continuously being updated, however, the individual may not be aware of the cumulative dose received.

Technical Reference(s) Technical Specification Section 5.7 Attached w/ Revision # See Comments / Reference

Proposed references to be provided during examination: None

Learning Objective:
OP11.GFE.RR4.OB106 **STATE** the requirements for access into a high radiation area.

Question Source: Bank # RLS.SL5.OB107-3
Modified Bank # _____ (Note changes or attach parent)
New _____

Question History: Last NRC Exam _____

Question Cognitive Level: Memory or Fundamental Knowledge X
Comprehension or Analysis _____

10 CFR Part 55 Content: 55.41 12
55.43 _____

Comments / Reference: From Technical Specification Section 5.7	Amendment # 144

5.7 High Area Radiation Area

5.7.1 High Radiation Areas with Dose Rates Not Exceeding 1.0 rem/hour at 30 Centimeters from the Radiation Source or from any Surface Penetrated by the Radiation (continued)

d. Each individual or group entering such an area shall possess:

1. A radiation monitoring device that continuously displays radiation dose rates in the area; or

2. A radiation monitoring device that continuously integrates the radiation dose rates in the area and alarms when the device's dose alarm setpoint is reached, with an appropriate alarm setpoint, or

3. A radiation monitoring device that continuously, transmits dose rate information and cumulative dose to a remote receiver monitored by radiation protection personnel responsible for controlling personnel radiation exposure with the area, or

4. A self-reading dosimeter (e.g., pocket ionization chamber or electronic dosimeter) and,

(i) Be under the surveillance, as specified in the RWP or equivalent, while in the area, of an individual qualified in radiation protection procedures, equipped with a radiation monitoring device that continuously displays radiation dose rates in the area; who is responsible for controlling personnel exposure within the area, or

(ii) Be under the surveillance as specified in the RWP or equivalent, while in the area, by means of closed circuit television, of personnel qualified in radiation protection procedures, responsible for controlling personnel radiation exposure in the area, and with the means to communicate with individuals in the area who are covered by such surveillance.

e. Except for individuals qualified in radiation protection procedures, entry into such areas shall be made only after dose rates in the area have been determined and entry personnel are knowledgeable of them.

Examination Outline Cross-reference:	Level	RO	SRO
	Tier #	3	
	Group #	3	
	K/A #	G 2.3.14	
	Importance Rating	3.4	

Radiation Control: Knowledge of radiation or contamination hazards that may arise during normal, abnormal, or emergency conditions or activities

Proposed Question: Common 71

Which ONE (1) of the following identifies how Fuel Handling Tools and equipment that have contacted Refueling Cavity Water must be handled per RFO-302, Handling of Fuel Assemblies?

Fuel Handling Tools must...

A. remain wetted or be re-lubricated prior to their next usage.

B. be flushed with demineralized water to remove boric acid before their next usage.

C. be flushed with demineralized water to remove radioactive contamination before touching.

D. be considered radioactively contaminated and not be touched without protective clothing.

Proposed Answer: D

Explanation:

A. Incorrect. Plausible because this action is desirable during use, however, not for long-term storage.
B. Incorrect. Plausible because the removal of boric acid would be considered desirable if the tool were allowed to air dry, however, it is the radioactive contamination that must be considered.
C. Incorrect. Plausible because this is a good operating practice, however, it does not preclude the use of protective clothing.
D. Correct. Per RFO-302, Precautions for Fuel Assembly Handling.

Technical Reference(s) RFO-302, Step 6.2.1 Attached w/ Revision # See Comments / Reference

Proposed references to be provided during examination: None

Learning Objective: OP51.RFO.FH2.OB107 **IDENTIFY** when the Fuel Handling tools and equipment must be considered contaminated.

Question Source: Bank # RFO.FH5.OB100-5
Modified Bank # _____ (Note changes or attach parent)
New _____

Question History: Last NRC Exam _____

Question Cognitive Level: Memory or Fundamental Knowledge X
Comprehension or Analysis _____

10 CFR Part 55 Content: 55.41 12
55.43 _____

Comments / Reference: From RFO-302, Step 6.2.1	Revision # 10

CPNPP STATION REFUELING MANUAL	UNIT COMMON	PROCEDURE NO. RFO-302
HANDLING OF FUEL ASSEMBLIES	REVISION NO. 10	PAGE 5 OF 26

6.0 INSTRUCTIONS

6.1 Prerequisites

6.1.1 The Fuel Handling Supervisor shall complete form RFO-302-1, "Fuel Movement Prerequisite Checklist" prior to moving any new or irradiated fuel.

- The Fuel Handling Supervisor shall determine which equipment in Section A of the form is needed to perform the fuel move and shall verify that the indicated checkout procedure has been performed.
- The Fuel Handling Supervisor shall determine which areas in Section B are applicable for the fuel movement.

6.2 Fuel Assembly Handling Precautions and Limitations

6.2.1 Avoid if possible the touching of tool and equipment surfaces that have contacted the refueling water. If wet tools and equipment must be touched, consider them contaminated.

6.2.2 Fuel assemblies shall be handled only by equipment specifically designed and provided for that purpose.

6.2.3 Equipment such as slings or cables shall not be attached directly to the fuel assemblies for handling purposes without contacting the fuel vendor.

6.2.4 Fuel assembly handling shall be performed only while the assembly is in the vertical position unless it is secured to a shipping container support frame or in a fuel transfer system upender.

Examination Outline Cross-reference:	Level	RO	SRO
	Tier #	3	
	Group #	3	
	K/A #	G 2.3.13	
	Importance Rating	3.4	

Radiation control: Knowledge of radiological safety procedures pertaining to licensed operator duties, such as response to radiation monitor alarms, containment entry requirements, fuel handling responsibilities, access to locked high radiation areas, aligning filters, etc

Proposed Question: Common 72

Given the following condition with a Refueling in progress:

- Maintenance Services has requested entry into the Incore Instrumentation Room, Elev. 832' to clean up debris around the Seal Table.

Which ONE (1) of the following identifies the condition that must be met prior to allowing access per STA-620, Containment Entry?

The Incore Detectors...

A. should be stored and tagged out-of-service.

B. must NOT be inserted in the core.

C. must be continuously monitored at the Seal Table.

D. Drive System must NOT be disconnected.

Proposed Answer: A

Explanation:

A. Correct. Per STA-620 the Incore Detectors System should be stored and tagged out of service to prevent possible movement and radiation overexposure of personnel.
B. Incorrect. Plausible if thought that storing the Incore Detectors in this location provides a hazard to individuals in the room, however, this is a desirable location.
C. Incorrect. Plausible because the Seal Table is one of the locations where movement of the Incore Detectors could take place, however, the system is tagged out to prevent inadvertent movement.
D. Incorrect. Plausible if thought that disconnecting the drive system could allow inadvertent movement of the Incore Detectors, however, it is the tagout that ultimately protects personnel.

Technical Reference(s) STA-620, Step 6.1.3 Attached w/ Revision # See Comments / Reference

Proposed references to be provided during examination: None

Learning Objective:
OP21.ADM.XAE.OB29 **LIST** the prerequisites that must be met prior to a containment entry.

Question Source: Bank # _____
Modified Bank # _____ (Note changes or attach parent)
New X

Question History: Last NRC Exam _____

Question Cognitive Level: Memory or Fundamental Knowledge X
Comprehension or Analysis _____

10 CFR Part 55 Content: 55.41 12
55.43 _____

Comments / Reference: From STA-620, Step 6.1.2 | Revision # 12

CPSES STATION ADMINISTRATION MANUAL		PROCEDURE STA-620
CONTAINMENT ENTRY	REVISION NO. 12	PAGE 11 OF 29

6.1.2 During refueling outages and maintenance activities, or when Containment is otherwise occupied for extended periods, the incore detectors should be tagged out of service until work activities are completed and/or arrangements made to preclude entry to the following areas:

- 808'-Incore Instrumentation Room
- 808'-Excess Letdown Heat Exchanger Room
- 808'-Steam Generator Loop Rooms
- 832'-Incore Instrumentation Room
- 832'-Regenerative Heat Exchanger Room
- 849'-Incore Instrumentation Room

IF either of the following is true, THEN Caution Tags may be lifted by the Shift Manager:

- The detectors have been placed in storage and/or are incapable of being withdrawn or moved during performance of maintenance and testing.
- It has been determined by Radiation Protection that operation of the incore detectors will not adversely affect other activities in Containment.

6.1.3 IF entry into the Seal Table or Incore Drive rooms is required for reasons other than repair of the Incore System, THEN the Incore instrumentation shall be placed within the reactor core or otherwise located to minimize exposure; AND should be tagged out of service.

Examination Outline Cross-reference:

Level	RO	SRO
Tier #	3	
Group #	4	
K/A #	G 2.4.43	
Importance Rating	73	

Emergency Procedures/Plan: Knowledge of emergency communications systems and techniques

Proposed Question: Common 73

Which ONE (1) of the following plant notification methods is used during a medical emergency involving a contaminated and injured mechanic?

A. Sound the Site Radiation alarm for ~10 seconds.
Press the ALL PAGE button on the Gaitronics and make the announcement.
Sound the Site Radiation alarm again for ~10 seconds.
Repeat the announcement.

B. Sound the Site Yelp alarm for ~10 seconds.
Press the ALL PAGE button on the Gaitronics and make the announcement.
Sound the Site Yelp alarm again for ~10 seconds.
Repeat the announcement.

C. Sound the Site Radiation alarm for ~10 seconds.
Press the ALL PAGE button on the Gaitronics and make the announcement.
Repeat the announcement.

D. Sound the Site Yelp alarm for ~10 seconds.
Press the ALL PAGE button on the Gaitronics and make the announcement.
Sound the Site Yelp alarm for ~10 seconds.

Proposed Answer: B

Explanation:

A. Incorrect. Plausible because a contaminated injured person could be construed as a Site Radiation emergency.
B. Correct. This is the correct sequence per the Operations Desktop Instruction.
C. Incorrect. These actions do not meet the “shall perform” statement of the OPS Instruction.
D. Incorrect. These actions do not meet the “shall perform” statement of the OPS Instruction in addition to the misconception of the contaminated injured person.

Technical Reference(s) Shift Operations Desktop Instruction #002 Attached w/ Revision # See Comments / Reference

Proposed references to be provided during examination: None

Learning Objective: ADM.XA1.OB21

RESPOND to plant emergencies in accordance with station procedures, including deviation from Technical Specifications and normal recovery methods when required, and **EVALUATE** plant and personnel response to emergencies.

Question Source:
Bank # ADM.XA1.OB21-10
Modified Bank # _____ (Note changes or attach parent)
New _____

Question History: Last NRC Exam April 2007 NRC Exam

Question Cognitive Level:
Memory or Fundamental Knowledge X
Comprehension or Analysis _____

10 CFR Part 55 Content:
55.41 10
55.43 _____

Comments / Reference: From Shift Operations Desktop Instruction #002	Revision # 2

SHIFT OPERATIONS DESKTOP INSTRUCTION **NO. 002**

Rev. 2 07/12/04

SITE EMERGENCY ANNOUNCEMENTS AND ALARM TESTING

PURPOSE:

The purpose of this instruction is to provide guidance on making Site Emergency Announcements and conducting weekly All Page and Alarm Tests.

INSTRUCTIONS:

A) Important or Emergency Announcements

Site Emergency Announcements are made from the Control Room in situations where the Site must be notified of an important or emergency situation. Alarms are provided to alert the site that an announcement is forthcoming.

NOTE: Announcements that provide Emergency Plan information are located in the appropriate "Position Assistance Document (PAD)"

When making an All Page announcement for either IMPORTANT site wide information or for EMERGENCY situations the following format shall be used:

1) Sound the appropriate alarm for approximately ten (10) seconds
2) Press the All Page button on the Gai-Tronics and make the appropriate announcement.
3) Sound the Alarm again for approximately ten (10) seconds.
4) Repeat the announcement.

For other Announcements that require an All Page, but are NOT of an IMPORTANT or EMERGENCY nature, such as Pre-Alarm Test Announcements or Announcements informing the site that a Fire/Emergency Planning Drill is about to commence or has been completed, NO YELP ALARM should be sounded. This will ensure that the YELP Alarm does not become over used and lull the site into a complacency which will diminish the effect of the Alarm when those situations arise which require dissemination of IMPORTANT or EMERGENCY information.

B) Weekly Alarm and All Page Test

Each week the All Page System and Site Alarm System are tested in accordance with the Shift Operations Daily Activities Book.

1) Select the Alarm to be tested as directed in the Daily Activities Book:

_____Site Evacuation Alarm

_____Site Radiation Alarm

_____Site Fire Alarm

_____Site Yelp Alarm

Page 1 of 2

Examination Outline Cross-reference:

Level	RO	SRO
Tier #	3	
Group #	4	
K/A #	G 2.4.5	
Importance Rating	3.7	

Emergency Procedures/Plan: Knowledge of the organization of the operating procedures network for normal, abnormal, and emergency evolutions

Proposed Question: Common 74

Which ONE (1) of the following procedure groups are the Optimal Recovery Guidelines at Comanche Peak?

A. EOP, EOS, Status Trees.

B. EOP, ECA, FRG.

C. ECA, FRG, Status Trees.

D. EOP, EOS, ECA.

Proposed Answer: D

Explanation:

A. Incorrect. Plausible because EOP and EOS procedures are correct, however, the Status Trees are part of the Functional Recovery Guidelines.
B. Incorrect. Plausible because EOP and ECA procedures are correct, however, the FRGs are part of the Functional Recovery Guidelines.
C. Incorrect. Plausible because the ECA procedures is correct, however, the FRGs and Status Trees are part of the Functional Recovery Guidelines
D. Correct. These are the three sets of procedures that make up the Optimal Recovery Guidelines.

Technical Reference(s) LO21.ERG.XG1.LN, Page 12 Attached w/ Revision # See Comments / Reference

Proposed references to be provided during examination: None

Learning Objective: LO21.ERG.XG1.OB04 **LIST** and **DIFFERENTIATE** between the three types of Optimal Recovery Guidelines.

Question Source: Bank # ERG.XG1.OB104-1
Modified Bank # _____ (Note changes or attach parent)
New _____

Question History: Last NRC Exam _____

Question Cognitive Level: Memory or Fundamental Knowledge X
Comprehension or Analysis _____

10 CFR Part 55 Content: 55.41 10
55.43 _____

Comments / Reference: From LO21.ERG.XG1.LN, Page 12	Revision # 03/02/06

Optimal Recovery Guidelines (ORGs)

In keeping with the primary emergency operations concept, the ORGs are designed to be entered upon determining that the reactor protection and/or safeguards limits have been exceeded. These symptom-based event-related recovery strategies guide the operator in recovering the plant to a stable condition from which any needed repairs can be made. They provide guidance for diagnosis and recovery from a broad spectrum of predefined events found to be the significant risk contributors. Since the events are predefined, extensive analysis and available industry experience are used to develop the ORGs.

The events for which ORGs are provided were selected based on a probabilistic study of PWR plant accident initiators (i.e., loss of reactor coolant, loss of secondary coolant, steam generator tube rupture), and functional system failures. A cutoff frequency of 10-8 occurrences per reactor-year is used to define those events considered to be significant risk contributors. ORGs are provided for all events with frequencies greater than 10-8 per reactor-year.

The ORG format presents technical guidance in a logical fashion which directs operator actions in response to symptoms present. The format permits the strategies to be arranged in a network of interconnected guidelines. Transitions between guidelines are provided by symptom-based instructions which direct the operator to the appropriate guideline and step. Two features that enhance the symptom-based guidelines are the two column format and fold-out pages. The two column format allows transitions at specific times, while the fold-out pages provide for them in a continuous manner.

The guidelines are organized in four groups, or series, which are related to the four categories of emergency events discussed earlier.

Comments / Reference: From LO21.ERG.XG1.LN, Page 12	Revision # 03/02/06

Category 0 is the Non-accident. This category includes the entry point to the ERGs following a reactor trip or safety injection actuation. This series provides for verification of automatic actuations and diagnostics for both non-accident and accident events. Guidance for non-accident events is provided, including response to reactor trip (with no SI), loss of all AC power and natural circulation cooldown. The other categories of emergency events are entered from this non-accident category.

Category 1 is a Loss of Reactor Coolant. This series addressed symptoms associated with the loss of reactor coolant. It includes guidance for cooldown and depressurization following a loss of reactor coolant, reduction and termination of safety injection, switchover to long term recirculation and loss of recirculation capability. Basic recovery actions for a loss of secondary coolant are also directed from this series.

Category 2 is a Loss of Secondary Coolant. This category addresses symptoms specifically associated with the loss of secondary coolant, including loss of secondary coolant from multiple steam generators. This category provides guidance for isolation of faulted steam generators.

Category 3 is a Steam Generator Tube Rupture. This series covers response to symptoms associated with steam generator tube ruptures, including tube ruptures in multiple steam generators and tube ruptures in combination with loss of reactor or secondary coolant. Guidance is included for cooldown and depressurization following steam generator tube ruptures, reduction and termination of safety injection and failure of pressurizer pressure control capability.

The ORGs within each series of guidelines are subdivided into three different types:

EOP guidelines (entry guidelines)

EOS guidelines (sub-guidelines)

ECA guidelines (emergency contingency actions)

This organization results in an entry guideline for each series with associated sub-guidelines and emergency contingency action guidelines. EOSs provide alternate recovery strategies within the event category. ECAs supplement both the entry and sub-guidelines by providing guidance for low probability or unique events. Use of ECAs allows these less probable events to be addressed without unduly complicating the EOP and EOS guidelines.

CPSES Optimal Recovery Guidelines are identified in Table 1.

Examination Outline Cross-reference:	Level	RO	SRO
	Tier #	3	
	Group #	4	
	K/A #	G 2.4.31	
	Importance Rating	4.2	

Emergency Procedures/Plan: Knowledge of annunciator alarms, indications, or response procedures

Proposed Question: Common 75

Given the following conditions:

- Unit 1 is operating at 100% power.
- 1-ALB-05C-1.1, RV FLANGE LKOFF TEMP HI is alarming.
- 1-TI-5400A, CNTMT AVE TEMP is indicating 95°F
- 1-TI-401, RV FLANGE LKOFF TEMP is indicating 165°F.
- Three (3) Containment Fan Coolers are in service.

Which ONE (1) of the following actions should be performed?

A. Make a Containment Entry to close 1RC-8069B, RV 1-01 HEAD INNER SL LKOFF ISOL VLV and open 1RC-8069A, RV 1-01 HEAD OUTER SL LKOFF ISOL VLV.

B. Start an additional Containment Fan Cooler in accordance with SOP-801A, Containment Ventilation System.

C. Open 1/1-8032, RV SEAL LKOFF VLV and perform OPT-303, Reactor Coolant System Water Inventory.

D. Make a Containment Entry to close 1RC-8069A, RV 1-01 HEAD OUTER SL LKOFF ISOL VLV, and open 1RC-8069B, RV 1-01 HEAD INNER SL LKOFF ISOL VLV.

Proposed Answer: A

Explanation:

A. Correct. When conditions permit, Containment entry is made and the valve alignment listed performed.
B. Incorrect. Plausible because this is the correct action if Containment average temperature is greater than or equal to 110°F.
C. Incorrect. Plausible because OPT-303 should be performed to determine leak rate, however, 1/1-8032 should be closed to isolate leakoff flow.
D. Incorrect. Plausible because both of these valves must be manipulated, however, 1-RC-8069A, Reactor Vessel Outer Seal Leakoff Valve should be opened and 1-RC-8069B, Reactor Vessel Inner Seal Leakoff Valve should be closed.

Technical Reference(s) ALM-0053A, 1-ALB-5C-1.1 Attached w/ Revision # See Comments / Reference

Proposed references to be provided during examination: None

Learning Objective: OP51.SYS.RC2.OB03

STATE the performance and design attributes of the following Reactor Vessel and Internals System components, flowpaths, and features:

- Reactor Vessel Head
- Penetrations and "O" Rings

Question Source:

Bank # SYS.RC2.OB11-1

Modified Bank # _____ (Note changes or attach parent)

New _____

Question History: Last NRC Exam September 2005 NRC Exam

Question Cognitive Level:

Memory or Fundamental Knowledge _____

Comprehension or Analysis X

10 CFR Part 55 Content:

55.41 10

55.43 _____

Comments / Reference: From ALM-0053A, 1-ALB-5C-1.1	Revision # 6

CPSES ALARM PROCEDURES MANUAL	UNIT 1	PROCEDURE NO. ALM-0053A
ALARM PROCEDURE 1-ALB-5C	REVISION NO. 6	PAGE 7 OF 61

ANNUNCIATOR NOM./NO.: **RV FLANGE LKOFF TEMP HI** **1.1**

PROBABLE CAUSE:

High Containment temperature
Reactor vessel O-ring failure

AUTOMATIC ACTIONS: None

OPERATOR ACTIONS:

1. Verify 1-TI-5400A, CNTMT AVE TEMP is <110°F.
   A. If temperature is ≥110°F, start an additional containment fan cooler per SOP-801A.

2. Monitor 1-TI-401, RV FLANGE LKOFF TEMP.

3. Close 1/1-8032, RV SEAL LKOFF VLV.

4. Notify Chemistry to increase monitoring of containment atmosphere to detect possible outer O-ring failure.

5. Perform OPT-303 to determine leakage rate, as applicable.

6. When conditions permit, perform a containment entry per STA-620 to align outer O-ring seal leakoff to RCDT.
   A. Close 1RC-8069B, RV 1-01 HEAD INNER SL LKOFF ISOL VLV.
   B. Open 1RC-8069A, RV 1-01 HEAD OUTER SL LKOFF ISOL VLV.
   C. Open 1/1-8032, RV SEAL LKOFF VLV.

7. Refer to TS 3.4.13 and 3.6.5

8. Correct the condition or initiate a work request per STA-606.

CPNPP Mar 2009 NRC Written Examination
Senior Reactor Operator
Answer Key

1.	C	26.	C	51.	B	76.	C
2.	B	27.	A	52.	A	77.	B
3.	A	28.	A	53.	D	78.	A
4.	B	29.	D	54.	C	79.	B
5.	A	30.	A	55.	C	80.	B
6.	A	31.	D	56.	D	81.	A
7.	B	32.	A	57.	C	82.	B
8.	D	33.	C	58.	D	83.	D
9.	C	34.	B	59.	C	84.	C
10.	C	35.	A	60.	B	85.	D
11.	B	36.	D	61.	C	86.	C
12.	C	37.	D	62.	A	87.	A
13.	D	38.	C	63.	B	88.	B
14.	A	39.	C	64.	C	89.	D
15.	C	40.	B	65.	D	90.	C
16.	A	41.	B	66.	B	91.	C
17.	D	42.	A	67.	A	92.	A
18.	D	43.	C	68.	B	93.	D
19.	B	44.	C	69.	B	94.	B
20.	B	45.	D	70.	A	95.	B
21.	D	46.	B	71.	D	96.	A
22.	D	47.	A	72.	A	97.	D
23.	A	48.	A	73.	B	98.	A
24.	A	49.	D	74.	D	99.	A
25.	B	50.	C	75.	A	100.	B

Exam Answer Breakdown:

A. 28
B. 26
C. 23
D. 23

Examination Outline Cross-reference:

Level	RO	SRO
Tier #		1
Group #		1
K/A #	026 G 2.4.41	
Importance Rating		4.6

Loss of Component Cooling Water: Emergency Procedures / Plan: Knowledge of the emergency action level thresholds and classifications

Proposed Question: SRO 76

Given the following conditions:

- The Site has felt an Earthquake that resulted in the following:
  - Both Units tripped due to Loss of All Offsite Power.
  - Unit 2 has lost Train A Component Cooling Water due to a rupture.
  - Unit 1 has both Emergency Diesels running.
  - Unit 2 has the Train B Emergency Diesel running.
  - Both Units are implementing EOS-0.1, Reactor Trip Response and ABN-601, Response to a 138/345 KV System Malfunction.

Which ONE (1) of the following describes the HIGHEST Emergency Plan Action Level that applies to this situation?

A. NOTIFICATION OF UNUSUAL EVENT due to loss of all Preferred and Alternate Offsite Power to 1E Buses for >15 minutes.

B. ALERT due to loss of all Preferred and Alternate Off-Site Power to 1E Buses for >15 minutes and failure to supply all 1E Buses from the Diesels on Unit 2.

C. ALERT due to an Earthquake felt in the plant and detected by Seismic Instruments GREATER than OBE.

D. SITE AREA EMERGENCY due to conditions existing which indicate actual failures of plant equipment needed to protect the public.

Proposed Answer: C

Explanation:

A. Incorrect. Plausible because these conditions would require declaration at NOUE if a higher EAL did not exist.
B. Incorrect. Plausible because these conditions would require declaration at NOUE but the failure to supply one Train from the EDG on Unit 2 does not escalate to a higher EAL.
C. Correct. Earthquake on site with safety system damage is an ALERT.
D. Incorrect. Plausible because it could be thought that Safety System failures have occurred to the extent that a Site Area Emergency exists, however, with one emergency train available on Unit 2, Design Basis Accident criteria have been met.

Technical Reference(s) EPP-201, Attachment 1, Charts 5, 8 & 9
EPP-201, Attachment 2
Attached w/ Revision # See Comments / Reference

Proposed references to be provided during examination: EPP-201, Attachment 1 and 2

Learning Objective: EP21.AC1.AG1.OB09 **DESCRIBE** the process for Emergency Action Classification and **DISCUSS** the use of the EPP-201 Emergency Action Classification Charts and Bases.

Question Source: Bank # _____
Modified Bank # _____ (Note changes or attach parent)
New X

Question History: Last NRC Exam _____

Question Cognitive Level: Memory or Fundamental Knowledge _____
Comprehension or Analysis X

10 CFR Part 55 Content: 55.41 _____
55.43 5

Comments / Reference: From EPP-201, Attachment 1, Chart 8	Revision # 11

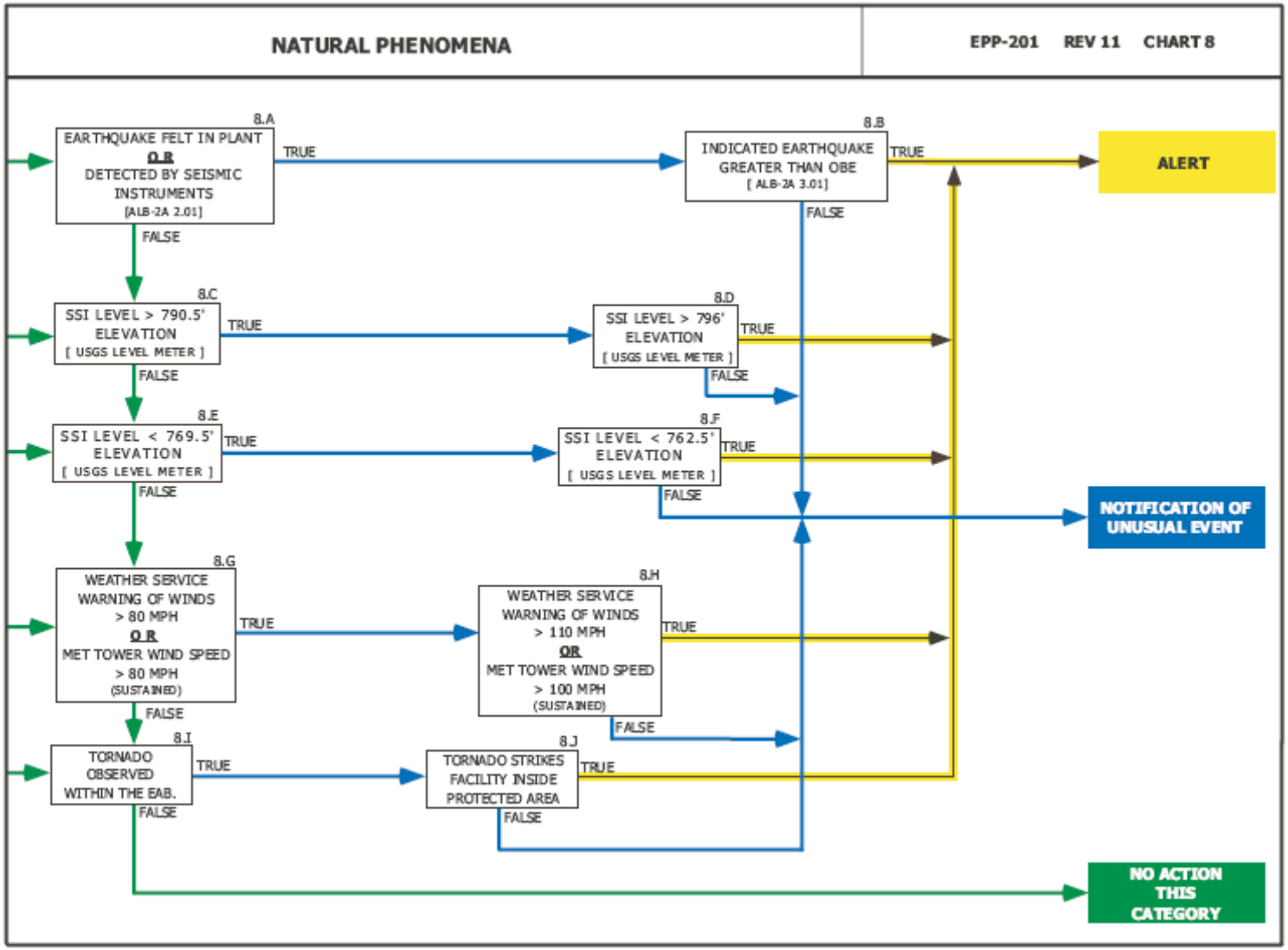

Comments / Reference: From EPP-201, Attachment 1, Chart 5	Revision # 11

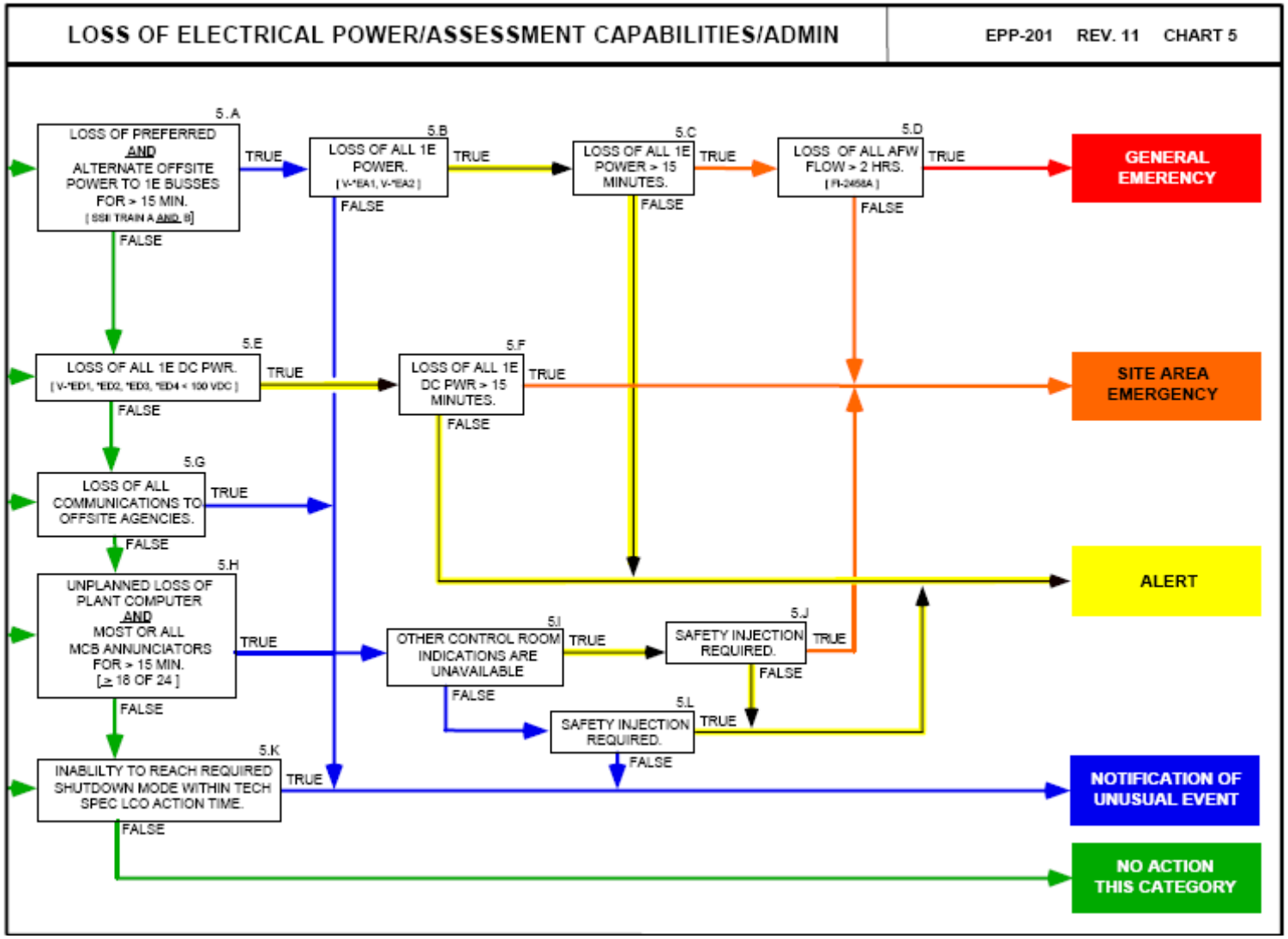

Comments / Reference: From EPP-201, Attachment 1, Chart 9	Revision # 11

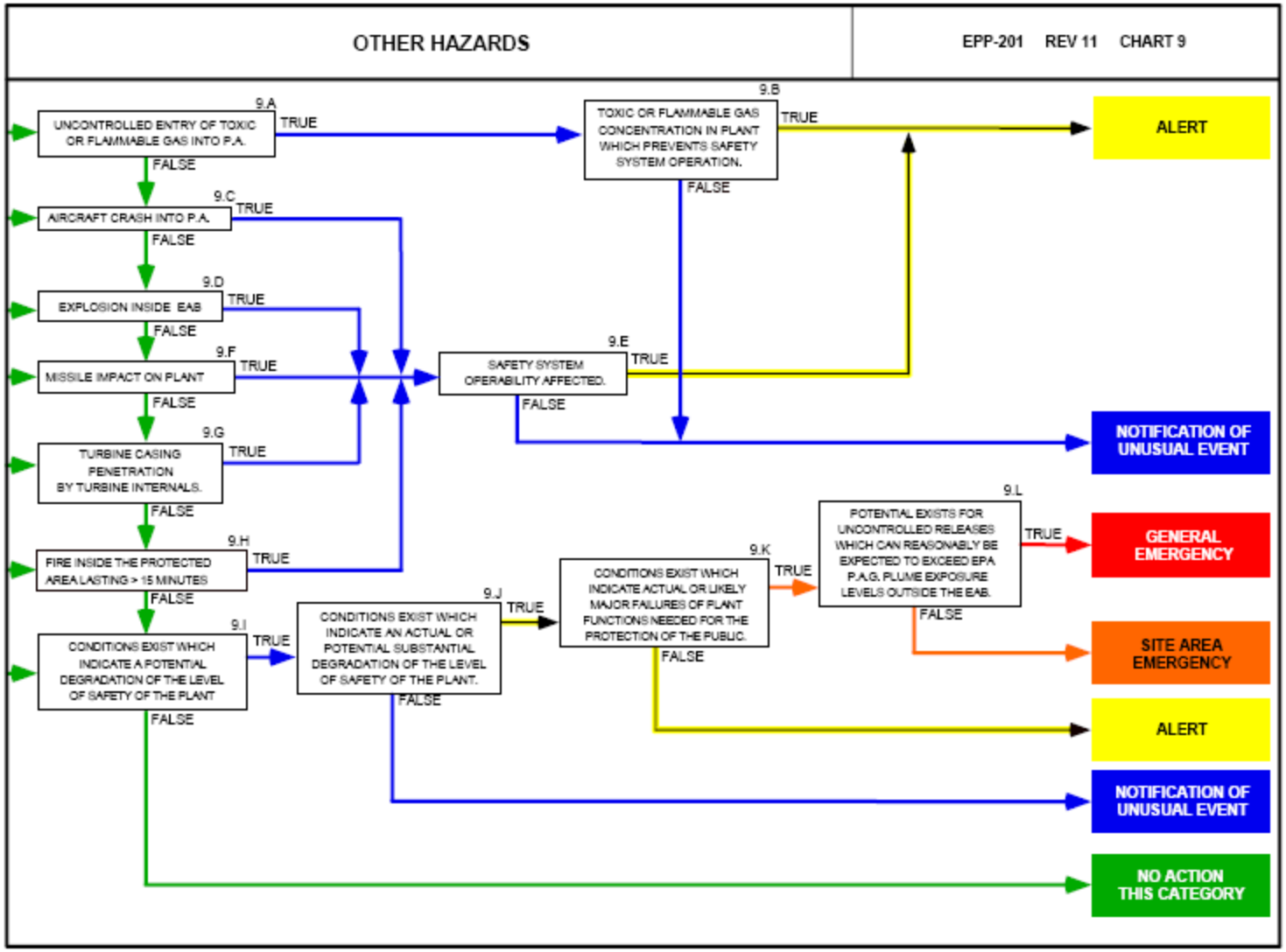

Examination Outline Cross-reference:

Level	RO	SRO
Tier #		1
Group #		1
K/A #	007 EA2.05	
Importance Rating		3.9

Reactor Trip-Stabilization-Recovery: Ability to determine and interpret the following as they apply to a reactor trip: Reactor trip first-out indication

Proposed Question: SRO 77

Given the following conditions:

- Unit 1 is operating at 100% power with all systems aligned normally. The following alarm is received:
  - 1-ALB-6C-4.2, RX ≥ 48% PWR 1 OUT OF 4 RC LOOP FLO LO

Which ONE (1) of the following describes the immediate response to this alarm?

A. Enter ABN-713, RCS Loop Flow Instrument Malfunction, and verify the other channels on the associated loop are normal.

B. Enter EOP-0.0A, Reactor Trip or Safety Injection, and verify the Reactor and Turbine are tripped.

C. Enter ABN-101, Reactor Coolant Pump Trip/Malfunction, and verify RCPs in loops with Pressurizer Spray Valves, running.

D. Enter ABN-101, Reactor Coolant Pump Trip/Malfunction, and verify at least one RCP running.

Proposed Answer: B

Explanation:

A. Incorrect. Plausible because SSPS uses a 2 out of 4 logic for Low Flow trip.
B. Correct. Alarm Panel 1-ALB-6C is the First Out panel and alarming conditions are the result of a trip condition. Conditions for a trip on RCS Low Flow exist and EOP-0.0A, Reactor Trip or Safety Injection entry is required.
C. Incorrect. Plausible because the operator could interpret this to be a problem with Pressurizer Spray flow.
D. Incorrect. Plausible because the operator could interpret this annunciator improperly.

Technical Reference(s) ALM-0063A, 1-ALB-6C-4.2
EOP-0.0A, Step 1
Attached w/ Revision # See Comments / Reference

Proposed references to be provided during examination: None

Learning Objective: OP51.SYS.ES1.OB14 For the Reactor Trip, Block, TSLBs and Permissive Status Indications, **DESCRIBE** the meaning of any given window.

Question Source: Bank # _____
Modified Bank # _____ (Note changes or attach parent)
New X

Question History: Last NRC Exam _____

Question Cognitive Level: Memory or Fundamental Knowledge _____
Comprehension or Analysis X

10 CFR Part 55 Content: 55.41 _____
55.43 5

Comments / Reference: From ALM-0063A, 1-ALB-6C-4.2	Revision # 5

CPSES ALARM PROCEDURES MANUAL	UNIT 1	PROCEDURE NO. ALM-0063A
ALARM PROCEDURE 1-ALB-6C	REVISION NO. 5	PAGE 57 OF 69

ANNUNCIATOR NOM./NO.: **RX ≥48% PWR 1 OF 4 RC LOOP FLO LO** **4.2**

PROBABLE CAUSE:

RCP trip or malfunction
Loss of non safeguards buses

AUTOMATIC ACTIONS:

Reactor trip
Turbine trip

OPERATOR ACTIONS:

1. Go to EOP-0.0A.

Comments / Reference: From EOP-0.0A, Step 1	Revision # 8

CPSES EMERGENCY RESPONSE GUIDELINES	UNIT 1	PROCEDURE NO. EOP-0.0A
REACTOR TRIP OR SAFETY INJECTION	REVISION NO. 8	PAGE 3 OF 111

STEP	ACTION/EXPECTED RESPONSE	RESPONSE NOT OBTAINED
1	Verify Reactor Trip:	
	a. Verify the following: • Reactor trip breakers - AT LEAST ONE OPEN -AND- • Neutron flux - DECREASING	a. Manually trip reactor from both trip switches. IF reactor will not trip, THEN momentarily de-energize 480V normal switchgear 1B3 AND 1B4. IF reactor NOT tripped, THEN go to FRS-0.1A, RESPONSE TO NUCLEAR POWER GENERATION/ATWT, Step 1.
	b. All control rod position rod bottom lights - ON	
2	Verify Turbine Trip: • All HP turbine stop valves - CLOSED	Manually trip turbine. IF the turbine will NOT trip, THEN pull-out all EHC fluid pumps. IF turbine still NOT tripped, THEN close or verify closed main steamline isolation valves.

Examination Outline Cross-reference:

Level	RO	SRO
Tier #		1
Group #		1
K/A #	057 G 2.4.1	
Importance Rating		4.8

Loss of AC Instrument Bus: Emergency Procedures / Plan: Knowledge of EOP entry conditions and immediate action steps

Proposed Question: SRO 78

Given the following conditions:

- Unit 1 is at 100% power and the following annunciator just alarmed.
  - 1-ALB-10B-4.14, 118 VAC INV IV1C3 TRBL
- The BOP reports that Instrument Bus 1C3 has been lost.

Which ONE (1) of the following best describes the actions that are required and why?

A. Enter ABN-604, Loss of a Non-1E Instrument Bus. Direct a Turbine Runback and trip the Reactor if Steam Generator levels decrease uncontrollably.
Loss of forward flow from the Heater Drains System has occurred.

B. Enter ABN-604, Loss of a Non-1E Instrument Bus. Verify all Plant Computer CRT Screens performing normally and direct the NEO to shift the bus loads to the alternate source at Non-safeguards inverter IV1C3.
Plant Computer FAILOVER has occurred.

C. Enter ABN-603, Loss of a Protection or Instrument Bus. Place Rod Control in MANUAL and manually control Seal Injection, Letdown and Charging flows.
Multiple primary instrument and control failures have occurred.

D. Enter ABN-603, Loss of a Protection or Instrument Bus. Swap to Alternate Power, verify instrument indications, and refer to Technical Specifications for required actions.
Loss of safety related indications with no automatic actions has occurred.

Proposed Answer: A

Explanation:

A. Correct. This is the correct procedure and actions to perform.
B. Incorrect. Plausible because these are some of the symptoms and actions for a loss of Instrument Bus 1C5 or 1C6.
C. Incorrect. Plausible because these are some of the symptoms and actions for a loss of Protection Bus 1PC1.
D. Incorrect. Plausible because these are some of the symptoms and actions for a loss of Bus 1EC1.

Technical Reference(s) ABN-604, Step 3.3.1 & Section 4.0
ALM-0102A, 1-ALB-10B-4.14
OP51.SYS.AC3.LN, Page 44

Attached w/ Revision # See Comments / Reference

Proposed references to be provided during examination: None

Learning Objective: OP51.SYS.AC3.OB13

ANALYZE the indications and **DESCRIBE** the mitigation strategy and major steps taken, both initial and subsequent, for:

- ABN-604, Loss of Non-1E Instrument Bus

Question Source:
Bank # _____
Modified Bank # _____ (Note changes or attach parent)
New X

Question History: Last NRC Exam _____

Question Cognitive Level:
Memory or Fundamental Knowledge _____
Comprehension or Analysis X

10 CFR Part 55 Content:
55.41 _____
55.43 5

Comments / Reference: From ABN-604, Step 3.3.1	Revision # 4

CPNPP ABNORMAL CONDITIONS PROCEDURES MANUAL	UNIT 1 AND 2	PROCEDURE NO. ABN-604
LOSS OF NON-1E INSTRUMENT BUS	REVISION NO. 4	PAGE 6 OF 55

3.3 Operator Actions

ACTION/EXPECTED RESPONSE	RESPONSE NOT OBTAINED

CAUTION:
- Reactor power must be established at a value within the capability of available feed water. Auxiliary feedwater pumps can supply approximately 6% reactor power.
- The status of the secondary heat sink and available feedwater must be closely monitored during the performance of this procedure. The Reactor should be manually tripped if secondary heat sink cannot be maintained.

NOTE:
- Diamond step 1 denotes Initial Operator Action.
- Should a Reactor Trip occur at any time during performance of this procedure, immediately proceed to EOP-0.0A/B, Reactor Trip or Safety Injection.

☐ ◇1 Ensure Turbine Power - LESS THAN OR EQUAL TO 800 MW.
- Ensure 1/u-RBSS, CONTROL ROD BANK SELECT in AUTO.
- Manually Runback Turbine Power to 800 MW, if necessary.

☐ 2 Verify SG Levels - STABLE OR TRENDING TO NORMAL OPERATING RANGE.

Perform the following:

a. IF SG level is decreasing in an uncontrolled manner, THEN trip the Reactor AND GO TO EOP-0.0A/B while continuing this procedure.

b. IF Reactor Power is above the capability of available feed flow, THEN reduce power using a combination of rod control, turbine control or boration until steam generator levels can be maintained while continuing this procedure.

c. IF Step b. unsuccessful, THEN perform the following:

1) START both MD AFWPs.

2) Ensure the FSBVs are closed.

3) Ensure Main Feedwater aligned.

4) Adjust the Auxiliary Feedwater Pump flow control valves to maintain steam generator narrow range level between 60% and 75%

Comments / Reference: From ABN-604, Section 4.0	Revision # 4

CPNPP ABNORMAL CONDITIONS PROCEDURES MANUAL	UNIT 1 AND 2	PROCEDURE NO. ABN-604
LOSS OF NON-1E INSTRUMENT BUS	REVISION NO. 4	PAGE 8 OF 55

4.0 LOSS OF INSTRUMENT BUS uC5 OR uC6

4.1 Symptoms

a. Annunciator Alarms

- "FWPT A/B DIGITAL CNTRL TRBL (7B-4.13)
- "AMSAC TRBL" (9B-4.7)
- "118V INV IVuC5/IVuC6 TRBL" (10B-3.19)

b. Plant Indications

- The words TIME NOT UPDATING will appear in time and date area on Plant Computer CRT screen.
- The word FAILOVER will appear in active section of Plant Computer CRT screen until backup takes over.

4.2 Automatic Actions

Plant Computer fails over to BACKUP mode.

NOTE:
- Inverters IVuC5/6 supply power to the Mark V FWP controllers.
- Inverter IVuC6 supplies power to Condensate Polishing controls. Loss of IVuC6 will cause u-PV-2242, Uu CNDS POL FILT BYP PRESS CTRL VLV to fail open.

Comments / Reference: From ALM-0102A, 1-ALB-10B-4.14	Revision # 10

CPSES ALARM PROCEDURES MANUAL	UNIT 1	PROCEDURE NO. ALM-0102A
ALARM PROCEDURE 1-ALB-10B	REVISION NO. 10	PAGE 262 OF 284

ANNUNCIATOR NOM./NO.: **118V INV IV1C3 TRBL** **4.14**

PROBABLE CAUSE:

Inverter out of service
Inverter malfunction
Loss of power
Loss of Bypass Power

AUTOMATIC ACTIONS:

Inverter IV1C3 automatically transfers to bypass source
Automatically returns to "Inverter to Load" if conditions are normal for 30 seconds.

> NOTE: Inverter will automatically transfer to bypass source, if available, under the following conditions:
> - Loss of square wave resulting from power or control circuit failure
> - Loss of inverter AC output voltage resulting from ferroresonant transformer failure, load fault or overload condition

OPERATOR ACTIONS:

> NOTE: If the inverter was removed from service as part of a planned evolution, operator actions are not required.

OPERATOR ACTIONS:

1. If loss of 1C3 occurs, refer to ABN-604.

2. Dispatch an operator to ECB 792 Hallway to determine and correct cause of alarm condition.

3. Determine Inverter IV1C3 status using indication on front of inverter.

4. If only BYPASS SOURCE SUPPLYING LOAD AND IN SYNC light is on, perform the following steps:
   1) Obtain permission from Control Room to realign Inverter IV1C3 to normal.
   2) Press INVERTER TO LOAD pushbutton.

Comments / Reference: From OP51.SYS.AC3.LN, Page 44	Revision # 12/15/03

LOSS OF UC3

Loss of uC3 causes a secondary transient that cannot be controlled at full power. Initially Steam Generator Blowdown isolates, the normal level control valves for feedwater heaters 1A & B, 2A & B, 4A & B, 5A & B and 6A & B fail closed, and the alternate level control valves send heater drains to the Main Condenser. Heater Drain Tank level and Heater Drain Pump discharge flow decrease until the Main Feed Pumps trip on low suction pressure. The Main Feed Pump trip annunciators and runback will not actuate. The Steam Dumps are unavailable because C9 is lost. A manual trip will probably be required from high power levels. Following the trip, the Steam Generator Atmospheric Relief valves will control steam pressure and RCS temperature. Auxiliary Feedwater will respond normally and Safety Injection should not be necessary. Seismic Monitoring and Sequencer trouble alarms will also require operator attention. ABN-604 directs a load reduction to 800 MWe.

Examination Outline Cross-reference:	Level	RO	SRO
	Tier #		1
	Group #		1
	K/A #	W/E04 EA2.1	
	Importance Rating		4.3

LOCA Outside Containment: Ability to determine and interpret the following as they apply to the LOCA Outside Containment: Facility conditions and selection of appropriate procedures during abnormal and emergency operations

Proposed Question: SRO 79

Given the following conditions:

- Unit 1 is in MODE 3 following a Reactor trip from 50% power.
- Safety Injection has actuated due to low Pressurizer pressure.
- Containment parameters are normal.
- Safety Injection termination criteria cannot be met at this time.
- Residual Heat Removal Area Radiation Monitor (RHR-122) is in RED alarm and rising.
- Safeguards Building Ventilation Exhaust Monitor (SBV-287) is in RED alarm and rising.
- The crew is performing EOP-0.0A, Reactor Trip or Safety Injection, diagnostics.

Which ONE (1) of the following procedures should be performed?

A. EOP-1.0A, Loss of Reactor or Secondary Coolant.

B. ECA-1.2A, LOCA Outside Containment directly from EOP-0.0A.

C. Remain in EOP-0.0A and complete all steps.

D. ECA-1.1A, Loss of Emergency Coolant Recirculation.

Proposed Answer: B

Explanation:

A. Incorrect. Plausible because it appears that a Loss of Reactor Coolant is occurring therefore a transition to EOP-1.0A seems appropriate, however, answers to the Action/Expected Response column of EOP-0.0A, Step 14 would all be YES and continuation in EOP-0.0A would be required.
B. Correct. When an abnormal radiation level is sensed outside Containment a transition to ECA-1.2A is required.
C. Incorrect. Plausible because conditions in the Stem do not immediately identify any reason to leave EOP-0.0A, however, at Step 19 a transition would be made because Safeguards Building radiation levels are rising.
D. Incorrect. Plausible because there are indications of a LOCA Outside Containment which would inhibit coolant recirculation due to loss of inventory, however, this procedure is not entered from EOP-0.0A but rather ECA-1.2A when a LOCA Outside Containment cannot be isolated.

Technical Reference(s) ECA-1.2A, Entry Conditions C.1)
EOP-0.0A, Steps 14 & 19
ECA-1.1A, Symptoms or Entry Conditions

Attached w/ Revision # See Comments / Reference

Proposed references to be provided during examination: None

Learning Objective: OPD1.EO0.XG2.OB14

Given specific plant and/or monitoring equipment conditions, **DESCRIBE** the Senior Reactor Operator's responsibilities in accordance with CPSES Administrative Guidelines. Discussion should include:

- Selection of procedures and mitigation strategies based on system conditions, system parameters, and/or alarms.

Question Source: Bank # SM1.XGH.OB03-1
Modified Bank # _____ (Note changes or attach parent)
New _____

Question History: Last NRC Exam _____

Question Cognitive Level: Memory or Fundamental Knowledge _____
Comprehension or Analysis X

10 CFR Part 55 Content: 55.41 _____
55.43 4, 5

Comments / Reference: From ECA-1.2A, Entry Conditions C.1) | Revision # 8

CPSES EMERGENCY RESPONSE GUIDELINES	UNIT 1	PROCEDURE NO. ECA-1.2A
LOCA OUTSIDE CONTAINMENT	REVISION NO. 8	PAGE 2 OF 6

A. PURPOSE

This procedure provides actions to identify and isolate a LOCA outside containment.

B. APPLICABILITY

This procedure is applicable for initiating events occurring in MODES 1, 2 and 3. This procedure assumes RHR is not in service. Using this procedure when not in these modes requires a step by step evaluation to determine if the required action is still applicable to current plant conditions.

C. SYMPTOMS OR ENTRY CONDITIONS

This procedure is entered from:

1) EOP-0.0A, REACTOR TRIP OR SAFETY INJECTION, on abnormal radiation in the auxiliary or safeguards building due to a loss of RCS inventory outside containment.

Comments / Reference: From EOP-0.0A, Step 19	Revision # 8

CPSES EMERGENCY RESPONSE GUIDELINES	UNIT 1	PROCEDURE NO. EOP-0.0A
REACTOR TRIP OR SAFETY INJECTION	REVISION NO. 8	PAGE 13 OF 111

STEP	ACTION/EXPECTED RESPONSE	RESPONSE NOT OBTAINED
*17	Check SG Levels:	
	a. Narrow range level - GREATER THAN 43%	a. Maintain total AFW flow greater than 460 gpm until narrow range level greater than 43% in at least one SG.
	b. Control AFW flow to maintain narrow range level between 43% and 60%	b. IF narrow range level in any SG continues to increase in an uncontrolled manner, THEN go to EOP-3.0A, STEAM GENERATOR TUBE RUPTURE, Step 1.
	c. Any SG level increasing in an uncontrolled manner	c. Go to Step 18.
	d. Go to EOP-3.0A, STEAM GENERATOR TUBE RUPTURE, Step 1.	
18	Check Secondary Radiation - NORMAL • Condenser off gas radiation monitor (COG-182, 1RE-2959) • Main steamline radiation (MSL-178 through 181, 1RE-2325 through 2328) • SG blowdown sample radiation monitor (SGS-164, 1RE-4200)	Go to EOP-3.0A, STEAM GENERATOR TUBE RUPTURE, Step 1.
19	Check Auxiliary And Safeguards Building Radiation - NORMAL (GRID 4)	Evaluate cause of abnormal conditions. IF the cause is a loss of RCS inventory outside containment, THEN go to ECA-1.2A, LOCA OUTSIDE CONTAINMENT, Step 1.

Comments / Reference: From ECA-1.1A, Symptoms or Entry Conditions	Revision # 8

CPSES EMERGENCY RESPONSE GUIDELINES	UNIT 1	PROCEDURE NO. ECA-1.1A
LOSS OF EMERGENCY COOLANT RECIRCULATION	REVISION NO. 8	PAGE 2 OF 79

A. PURPOSE

This procedure provides actions to restore emergency coolant recirculation capability, to delay depletion of the RWST by adding makeup and reducing outflow, and to depressurize the RCS to minimize break flow.

B. APPLICABILITY

This procedure is applicable for initiating events occurring in MODES 1, 2 and 3. This procedure assumes RHR is not in service. Using this procedure when not in these modes requires a step by step evaluation to determine if the required action is still applicable to current plant conditions.

C. SYMPTOMS OR ENTRY CONDITIONS

NOTE: Selected instruction of ECA-1.1A may be used as compensatory actions to respond to recirculation sump blockage. Use of ECA-1.1A instruction to respond to degraded recirculation sump conditions requires a step by step evaluation of the selected instructions to determine if the required actions are applicable to current plant conditions.

This procedure is entered from:

1) EOP-1.0A, LOSS OF REACTOR OR SECONDARY COOLANT, when cold leg recirculation capability cannot be verified.

2) EOS-1.3A, TRANSFER TO COLD LEG RECIRCULATION, when at least one flow path from the sump cannot be established or maintained.

3) ECA-1.2A, LOCA OUTSIDE CONTAINMENT, when a LOCA outside containment cannot be isolated.

Comments / Reference: From EOP-0.0A, Step 14	Revision # 8

14	Check If RCS Is Intact: • Containment pressure - LESS THAN 1.3 PSIG • Containment recirculation sump levels - NORMAL • Containment radiation - NORMAL (GRID 4)	Go to EOP-1.0A, LOSS OF REACTOR OR SECONDARY COOLANT, Step 1.

Examination Outline Cross-reference:

Level	RO	SRO
Tier #		1
Group #		1
K/A #	008 G 2.1.23	
Importance Rating		4.4

Pressurizer Vapor Space Accident: Conduct of Operations: Ability to perform specific system and integrated plant procedures during all modes of plant operation

Proposed Question: SRO 80

Given the following conditions:

- Unit 1 has experienced a Loss of Coolant Accident.
- All required ESF actuations occurred as expected.
- EOS-1.2A, Post LOCA Cooldown and Depressurization, is being implemented.
- Current conditions are as follows:
  - Pressurizer pressure is 1050 psig and stable.
  - Pressurizer level is 55% and rising.
  - Reactor Vessel Level Indication is less than 11 inches above the Core Plate.
  - Highest Core Exit Thermocouples are 600°F.

Which ONE (1) of the following identifies the highest priority Functional Recovery Guideline and action required?

A. Enter FRP-0.2A, Response to Anticipated Pressurized Thermal Shock to establish inventory control by reducing ECCS flow.

B. Enter FRC-0.3A, Response to Saturated Core Cooling to verify adequate ECCS flow and ensure Pressurizer vent paths are closed.

C. Enter FRI-0.3A, Response to Voids in the Reactor Vessel and eliminate voids via operation of Reactor Head vents.

D. Enter FRI-0.1A, Response to High Pressurizer Level, to regain inventory control via Charging and Letdown.

Proposed Answer: B

Explanation:

A. Incorrect. Plausible because the Pressurizer going solid can lead to a PTS concern. The actions to reduce ECCS flow are not in FRP-0.2A and would be inappropriate.
B. Correct. Given the conditions listed, this is the correct Functional Response Procedure to enter.
C. Incorrect. Plausible because voiding is indicated but not for the same reason that FRI-0.3A is combating. The first step has you return to the procedure in affect if ECCS is in service.

D. Incorrect. Plausible because Pressurizer level is high but it is due to excess inventory. The first step has you return to the procedure in affect if ECCS is in service.

Technical Reference(s) FRC-0.3A, Steps 1 to 5
FRP-0.2A, Steps 2 and 5
FRI-0.3A, Step 1
FRI-0.1A, Step 1

Attached w/ Revision # See Comments / Reference

Proposed references to be provided during examination: None

Learning Objective: OPD1.EO0.XG2.OB14

Given specific plant and/or monitoring equipment conditions, **DESCRIBE** the Senior Reactor Operator's responsibilities in accordance with CPSES Administrative Guidelines. Discussion should include:

- Selection of procedures and mitigation strategies based on system conditions, system parameters, and/or alarms.

Question Source:
Bank # _____
Modified Bank # _____ (Note changes or attach parent)
New X

Question History: Last NRC Exam _____

Question Cognitive Level:
Memory or Fundamental Knowledge _____
Comprehension or Analysis X

10 CFR Part 55 Content:
55.41 _____
55.43 5

Comments / Reference: From FRC-0.3A, Steps 1 to 5	Revision # 8

CPSES EMERGENCY RESPONSE GUIDELINES	UNIT 1	PROCEDURE NO. FRC-0.3A
RESPONSE TO SATURATED CORE COOLING	REVISION NO. 8	PAGE 3 OF 11

STEP	ACTION/EXPECTED RESPONSE	RESPONSE NOT OBTAINED
	NOTE: If ECA-3.2A, SGTR WITH LOSS OF REACTOR COOLANT - SATURATED RECOVERY DESIRED, is in effect, this procedure should not be performed.	
* 1	Check RWST Level - GREATER THAN LO-LO LEVEL	Go to EOS-1.3A, TRANSFER TO COLD LEG RECIRCULATION.
2	Check RHR System Status:	
	a. RHR System - HAS BEEN PLACED IN SERVICE FOR COOLDOWN	a. Go to Step 3.
	b. Go to ABN-104, RESIDUAL HEAT REMOVAL SYSTEM MALFUNCTION.	
3	Verify ECCS Flow:	
	a. CCP safety injection flow indicator - CHECK FOR FLOW	a. Start pumps and align valves as necessary.
	b. SI pump flow indicators - CHECK FOR FLOW	b. Start pumps and align valves as necessary.
	c. RCS pressure - LESS THAN 325 PSIG (425 PSIG FOR ADVERSE CONTAINMENT)	c. Go to Step 4.
	d. RHR pump flow indicators - CHECK FOR FLOW	d. Start pumps and align valves as necessary.

CPSES EMERGENCY RESPONSE GUIDELINES	UNIT 1	PROCEDURE NO. FRC-0.3A
RESPONSE TO SATURATED CORE COOLING	REVISION NO. 8	PAGE 4 OF 11

STEP	ACTION/EXPECTED RESPONSE	RESPONSE NOT OBTAINED
4	Check RCS Vent Paths:	
	a. Power to PRZR PORV block valves - AVAILABLE	a. Locally restore power to block valve(s).
	b. PRZR PORVs - CLOSED	b. Manually close PRZR PORV(s). <u>IF</u> any valve can <u>NOT</u> be closed, <u>THEN</u> manually close its block valve.
	c. Block valves - AT LEAST ONE OPEN	c. Manually open block valve unless it was closed to isolate an open PRZR PORV.
	d. Reactor vessel head vents - CLOSED	d. Manually close reactor vessel head vent(s).
	e. PRZR vents - CLOSED	e. Manually close PRZR vent(s).
5	Return To Procedure And Step In Effect.	

-END-

Comments / Reference: From FRP-0.2A, Steps 2 and 5 (Step 5 pasted in)	Revision # 8

CPSES EMERGENCY RESPONSE GUIDELINES	UNIT 1	PROCEDURE NO. FRP-0.2A
RESPONSE TO ANTICIPATED PRESSURIZED THERMAL SHOCK CONDITION	REVISION NO. 8	PAGE 4 OF 17

STEP	ACTION/EXPECTED RESPONSE	RESPONSE NOT OBTAINED
		e. Minimize cooldown from faulted SG(s): 1) Ensure main steamline isolation valves closed for each faulted SG. 2) IF SG 1 or 4 faulted, THEN pull-out steam supply valve from faulted SG(s) to TDAFW pump. 3) IF all SGs faulted, THEN control AFW flow at 100 gpm to each SG. 4) IF any SG NOT faulted, THEN isolate all feedwater to faulted SG(s) unless necessary for RCS temperature control. IF a faulted SG is necessary for RCS temperature control, THEN control AFW flow at 100 gpm to that SG.
2	Check If ECCS Has Been Terminated: • SI pumps - ALL STOPPED • CCP injection line - ISOLATED	Go to Step 5.
5	Return To Procedure And Step In Effect.	

-END-

Comments / Reference: From FRI-0.3A, Step 1	Revision # 8

CPSES EMERGENCY RESPONSE GUIDELINES	UNIT 1	PROCEDURE NO. FRI-0.3A
RESPONSE TO VOIDS IN REACTOR VESSEL	REVISION NO. 8	PAGE 3 OF 44

STEP	ACTION/EXPECTED RESPONSE	RESPONSE NOT OBTAINED
	CAUTION: If a controlled natural circulation cooldown is in progress and a void in the reactor vessel upper head is expected, this procedure should not be performed.	
1	Check If ECCS Has Been Terminated: • SI pumps - ALL STOPPED • CCP injection line - ISOLATED	Return to procedure and step in effect.

Comments / Reference: From FRI-0.1A, Step 1	Revision # 8

CPSES EMERGENCY RESPONSE GUIDELINES	UNIT 1	PROCEDURE NO. FRI-0.1A
RESPONSE TO HIGH PRESSURIZER LEVEL	REVISION NO. 8	PAGE 3 OF 25

STEP	ACTION/EXPECTED RESPONSE	RESPONSE NOT OBTAINED
1	Check If ECCS Has Been Terminated: • SI pumps - ALL STOPPED • CCP injection line - ISOLATED	Return to procedure and step in effect.

Examination Outline Cross-reference:

Level	RO	SRO
Tier #		1
Group #		1
K/A #	062 AA2.03	
Importance Rating		2.9

Loss of Nuclear Service Water: Ability to determine and interpret the following as they apply to the Loss of Nuclear Service Water: The valve lineups necessary to restart the SWS while bypassing the portion of the system causing the abnormal condition

Proposed Question: SRO 81

Given the following condition:

- Both Unit 1 and Unit 2 are in MODE 1 when Unit 2 Train A Station Service Water (SSW) System is declared INOPERABLE.

Assuming no other Unit 1 and Unit 2 Limiting Conditions for Operations have been entered, which ONE (1) of the following LCOARs are applicable and where are the LCOARs maintained?

An Active LCOAR for LCO 3.7.8 on Unit 2 is placed in the Unit 2 LCOAR Section of the Electronic LCOAR Program and...

A. a Tracking LCOAR for LCO 3.7.8 on Unit 1 is placed in the Unit 1 Section of the Electronic LCOAR Program.

B. an Active LCOAR for LCO 3.7.8 on Unit 1 is placed in the Unit 1 Section of the Electronic LCOAR Program.

C. a Tracking LCOAR for LCO 3.7.8 on Unit 1 is placed in the Unit 2 Section of the Electronic LCOAR Program.

D. an Active LCOAR for LCO 3.7.8 on Unit 1 is placed in the Unit 2 Section of the Electronic LCOAR Program.

Proposed Answer: A

Explanation:

A. Correct. A Tracking LCOAR for LCO 3.7.8 is initiated on Unit 1 and placed in a Unit 1 LCOAR Section of the Electronic LCOAR Program to ensure that any INOPERABILITY affecting Unit 1 Station Service Water may be addressed by additional Technical Specification LCO Actions.

B. Incorrect. Plausible because it could be thought that an Active LCOAR is required for Unit 1 because an Active LCOAR is required for Unit 2, however, a Tracking LCOAR is required.

C. Incorrect. Plausible because a Tracking LCOAR for Unit 1 is required, however, it must be maintained in the Unit 1 Section of the Electronic LCOAR Program.

D. Incorrect. Plausible if thought that credit was not being taken for cross-connecting Unit Station Service Water Systems, however, this is identified in Technical Specification LCO 3.7.8, Condition A.

Technical Reference(s) ODA-308, Section 6.2
ODA-308, Definitions/Acronyms, Step 4.11
Tech Spec LCO 3.7.8, Condition A

Attached w/ Revision # See Comments / Reference

Proposed references to be provided during examination: None

Learning Objective: OPD1.ADM.XA5.OB12 **EVALUATE** the different situations that an Active LCOAR, a Tracking LCOAR, Outage LCOAR would be used in.

Question Source: Bank # ADM.XA5.OB13-1
Modified Bank # _____ (Note changes or attach parent)
New _____

Question History: Last NRC Exam _____

Question Cognitive Level: Memory or Fundamental Knowledge _____
Comprehension or Analysis X

10 CFR Part 55 Content: 55.41 _____
55.43 1, 2

Comments / Reference: From ODA-308, Section 6.2	Revision # 12

CPNPP OPERATIONS DEPARTMENT ADMINISTRATION MANUAL		PROCEDURE NO. ODA-308
LCO TRACKING PROGRAM	REVISION NO. 12	PAGE 15 OF 92

6.1 F. When the Shift Manager receives a SmartForm on Technical Specification, ODCM or TRM related equipment, OPERABILITY of the affected equipment is evaluated. IF there is reasonable assurance that OPERABILITY is not affected, BUT additional evaluation is warranted THEN a "Quick Turnaround" Technical Evaluation should be requested from engineering (normally within 24 hours) to confirm OPERABILITY in accordance with STA-421.

- An entry in the Station Log should be made regarding time the item was brought to the Shift Manager's attention, the item in question, and additional information requested.
- The Shift Manager's turnover should include this information so their relief can follow up on the item and make an accurate OPERABILITY call in a timely manner.

G. Fire protection system and equipment impairments should be processed in accordance with STA-738. Fire events or equipment status with reporting requirements should only be handled per STA-501.

H. Hazard barriers (e.g., floor plugs, missile shields, penetration seals) should be processed in accordance with STA-696. Additional controls delineated in STA-696 may exist when a barrier is impaired.

[C] I. The official record of a Technical Specification, TRM, or ODCM LCO Action entry, LCO Compliance and LCO Action Termination Time is the LCOAR Program (Electronic LCOAR Program, Manual Standard LCOAR Index, or ODA-308-1). The LCOAR Program is considered an extension of the affected Unit Log as defined in ODA-104. The LCOAR Program LCOAR initiation and termination time is the official LCOAR time tracking mechanism.

Logging related LCO items in the Unit Log provides a more comprehensive log and lessens the need to refer to many separate documents to recreate a sequence of conditions. These items may be logged in the Unit or Station Log as directed by the Shift Manager.

6.2 Methods to Track Conditions Affecting Structures, Systems, and Components OPERABILITY

6.2.1 Active LCOARs

A. Active LCOARs are used to track conditions affecting Structures, Systems and Components (SSCs) where entry into the applicable LCO is required.

[C] B. Active LCOAR entries and terminations shall be documented using the LCOAR Program.

Comments / Reference: From ODA-308, Section 6.2	Revision # 12

CPNPP OPERATIONS DEPARTMENT ADMINISTRATION MANUAL		PROCEDURE NO. ODA-308
LCO TRACKING PROGRAM	REVISION NO. 12	PAGE 16 OF 92

6.2.2 Tracking LCOARs

[C] A. Tracking LCOARs are used to track conditions affecting SSCs where entry into the applicable LCO is not required.

- A Tracking LCOAR is required when a SSC redundant to what is required by Technical Specifications is inoperable or removed from service. The Tracking LCOAR ensures configuration control for Technical Specification requirements and also ensures maintenance or repair activities are given a high priority.

  EXAMPLE: LCO 3.7.20, UPS HVAC System requires two UPS HVAC System trains to be OPERABLE. When all four UPS Room Fan Coil Units are OPERABLE, the UPS A/C Units are not required to satisfy OPERABILITY. However, if an UPS A/C Unit is inoperable, it should be tracked with a Tracking LCOAR to ensure the impact to the LCO is identified.

- A Tracking LCOAR may be used to track and document Special Condition Surveillances to ensure all required actions are satisfied.

  EXAMPLE: LCO 3.6.2, Containment Air Locks includes a surveillance requirement to perform air lock leakage rate testing in accordance with the Containment Leakage Rate Testing Program. The program requires that the air lock doors be leak tested within 7 days following use of an air lock door. A Tracking LCOAR is used to track completion of the Special Condition Surveillance requirement.

- A Tracking LCOAR is required to document completion of a missed surveillance.

- Inoperable Technical Specification, ODCM, or TRM related equipment not required to support present plant conditions should be tracked on a Tracking LCOAR. The following exceptions are allowed, when the inoperability is due to system or equipment alignment, AND does NOT involve maintenance activities or adverse conditions:

  1) A Tracking LCOAR is not required when an IPO contains instruction for restoring the equipment to OPERABLE status prior to the required Technical Specification Applicability.

  2) A Tracking LCOAR is not required when the Standard LCOAR associated with an LCO identifies an exception. For example, a Tracking LCOAR is not required while the Gaseous Waste Processing System Analyzer alarm/control functions are defeated during RWS-201 instructions for Gaseous Waste Recombiner operation. This exception is identified on the Standard LCOAR for TRM 13.10.31.

     Additional Standard LCOAR exceptions may be approved in those cases where operating procedure instructions prevent SSC operation outside of Technical Specification requirements. If it is desired to identify additional SSC exceptions on a Standard LCOAR, Operations Support personnel should be contacted.

[C] B. Tracking LCOAR entries and terminations shall be documented using the LCOAR Program.

Comments / Reference: From ODA-308, Definitions/Acronyms, Step 4.11	Revision # 12

4.11 LCOAR Book - A book (or electronic facsimile) designated for each Unit consisting of sections for the Active/Tracking LCOARs, Systems Important to Safety Log and Outage LCOARs.

Comments / Reference: From Tech Spec LCO 3.7.8, Condition A	Amendment # 64

3.7.8 Station Service Water System (SSWS)

LCO 3.7.8 Two SSWS trains and a SSW Pump on the opposite unit with its associated cross-connects shall be OPERABLE.

APPLICABILITY: MODES 1, 2, 3, and 4

ACTIONS

CONDITION	REQUIRED ACTION		COMPLETION TIME
A. Required SSW Pump on the opposite unit or its associated cross-connects inoperable.	A.1	Restore a SSW Pump on the opposite unit to OPERABLE status.	7 days
	AND		
	A.2	Restore associated cross-connects to OPERABLE status.	7 days

Examination Outline Cross-reference:

Level	RO	SRO
Tier #		1
Group #		2
K/A #	076 G 2.4.8	
Importance Rating		4.5

High Reactor Coolant Activity: Emergency Procedures / Plan: Knowledge of how abnormal operating procedures are used in conjunction with EOPs

Proposed Question: SRO 82

Given the following conditions:

- Unit 2 has returned to 100% power after a plant trip two days ago.
- Chemistry has just completed sampling the RCS for activity with the following results:
  - Dose equivalent I-131 is 65 µCi/gm.
  - Dose equivalent Xe-133 is 70 µCi/gm.

Which ONE (1) of the following describes the required response to these sample results?

The Technical Specification Limit on...

A. Xe-133 has been exceeded, maximize RCS purification and go to MODE 3.

B. I-131 has been exceeded, maximize RCS purification and go to MODE 3.

C. Xe-133 has been exceeded. Restore Dose Equivalent Xe-133 to within limit in 7 days.

D. I-131 has been exceeded. Restore Dose Equivalent I-131 to within limit in 7 days.

Proposed Answer: B

Explanation:

A. Incorrect. Plausible because the Xe-133 value is higher than normal and greater than the I-131 limit, however, the action is for the I-131 limit of 60 µCi/gm.
B. Correct. Tech Spec LCO 3.4.16 C applies if I-131 is >60 µCi/gm.
C. Incorrect. Plausible because the Tech Spec ACTIONS are correct for an out-of-spec condition, however, Xe-133 activity does not exceed Tech Spec limits.
D. Incorrect. Plausible because I-131 limits have been exceeded, however, the Tech Spec ACTIONS are incorrect.

Technical Reference(s): Technical Specification LCO 3.4.16; ABN-102, Section 2.3 — Attached w/ Revision # See Comments / Reference

Proposed references to be provided during examination: None

Learning Objective: LO21.RLS.SL1.OB12 Given a Technical Specification or a Technical Specification situation, **DIAGNOSE** the situation and **APPLY** the LCO and SR Applicability of Section 3.0 to **DETERMINE** all corrective actions.

Question Source: Bank # _____
Modified Bank # _____ (Note changes or attach parent)
New X

Question History: Last NRC Exam _____

Question Cognitive Level: Memory or Fundamental Knowledge _____
Comprehension or Analysis X

10 CFR Part 55 Content: 55.41 _____
55.43 2, 4

Comments / Reference: From Technical Specification LCO 3.4.16	Amendment # 137

3.4.16 RCS Specific Activity

LCO 3.4.16 RCS DOSE EQUIVALENT I-131 and DOSE EQUIVALENT XE-133 specific activity shall be within limits.

APPLICABILITY: MODES 1, 2, 3, and 4

ACTIONS

CONDITION	REQUIRED ACTION	COMPLETION TIME
A. DOSE EQUIVALENT I-131 not within limit.	----------Note---------- LCO 3.0.4.c is applicable. ----------	
	A.1 Verify DOSE EQUIVALENT I-131 ≤ 60 μCi/gm.	Once per 4 hours
	AND	
	A.2 Restore DOSE EQUIVALENT I-131 to within limit.	48 hours

(continued)

ACTIONS (continued)

CONDITION	REQUIRED ACTION	COMPLETION TIME
B. DOSE EQUIVALENT XE-133 not within limit.	----------NOTE---------- LCO 3.0.4.c is applicable. ----------	
	B.1 Restore DOSE EQUIVALENT XE-133 to within limit.	48 hours
C. Required Action and associated Completion Time of Condition A or B not met.	C.1 Be in MODE 3.	6 hours
	AND	
OR	C.2 Be in MODE 5.	36 hours
DOSE EQUIVALENT I-131 > 60 μCi/gm.		

SURVEILLANCE REQUIREMENTS

SURVEILLANCE		FREQUENCY
SR 3.4.16.1	----------NOTE---------- Only required to be performed in MODE 1. ----------	7 days
	Verify reactor coolant DOSE EQUIVALENT XE-133 specific activity ≤ 500 μCi/gm.	

Comments / Reference: From ABN-102, Section 2.3	Revision # 7

CPSES ABNORMAL CONDITIONS PROCEDURES MANUAL	UNIT 1 AND 2	PROCEDURE NO. ABN-102
HIGH REACTOR COOLANT ACTIVITY	REVISION NO. 7	PAGE 4 OF 6

2.3 Operator Actions

NOTE:
- Reactor Coolant System transients such as power changes, temperature changes, pressure changes, and starting and stopping RCPs can cause temporary increases in RCS activity.
- Monitor spiking and return to normal is not a real indication of failed fuel and as such does not require sampling. A steady or sustained increase over time would be a real indication of failed fuel/RCS activity problems.

☐ 1. Request additional reactor coolant specific activity samples be taken in accordance with CHM-111 for isotopic content analysis per Technical Specification 3.4.16, SURVEILLANCE REQUIREMENTS.

☐ 2. Notify Chemistry to review chemistry data and Core Performance Engineering to review chemistry data and core follow trends. Chemistry will determine if a "CRUD" burst has occurred. Core Performance Engineering will determine if the source of RCS activity is failed fuel and the extent of failed fuel, if any.

☐ 3. Increase letdown flow to 120-140 gpm as follows:

a) IF PDP is in operation, THEN start up a centrifugal charging pump AND shutdown PDP per SOP-103A/B.

b) Increase letdown flow to 120-140 gpm per SOP-103A/B.

☐ 4. Notify Radiation Protection that radiation levels may increase in Auxiliary and Safeguards Buildings AND on any ARMs.

☐ 5. Make a plant announcement via Gai-Tronics of indication of an increase in RCS Activity AND a possibility of increased radiation in Auxiliary and Safeguards Buildings.

NOTE: A rapid increase of RCS fission product isotopes during steady state operation may indicate fuel cladding damage. (e.g., Xe-133, Kr-85M, Cs-137, Cs-136, Sr-84, Sr-90, Iodine).

☐ 6. IF Core Performance Engineering Review of the chemistry data indicates failed fuel, THEN proceed as follows:

a) Refer to EPP-201.

b) Refer to Technical Specifications 3.4.16.

c) Review logs for any known RCS to Secondary Leakage.

Examination Outline Cross-reference:

Level	RO	SRO
Tier #		1
Group #		2
K/A #	W/E08 EA 2.1	
Importance Rating		4.2

RCS Overcooling - PTS: Ability to determine and interpret the following as they apply to the Pressurized Thermal Shock: Facility conditions and selection of appropriate procedures during abnormal and emergency operations

Proposed Question: SRO 83

Given the following conditions on Unit 1:

- RCS T_{cold} is 240°F and lowering slowly.
- Reactor Coolant System pressure is 30 psig and lowering slowly.
- Containment pressure is 30 psig and lowering slowly.
- The Pressurizer is empty.
- RVLIS indicates below 11 inches above the Core Plate.
- Reactor Coolant System subcooling is 0°F.
- All Engineered Safety Feature Actuations were as expected.

Which ONE (1) of the following describes the challenge to Pressurized Thermal Shock and the actions that are required?

A. ECCS flow has caused RCS cooldown to exceed the entry criteria for FRP-0.2A, Response to Anticipated Pressurized Thermal Shock Condition. Enter FRP-0.2A and reduce RCS cooldown by throttling ECCS flow.

B. RCS pressure and temperature are to the right of the Limit A curve so no challenge exists to Pressurized Thermal Shock. Voids are indicated in the vessel and entry into FRI-0.3A, Response to voids in the Reactor Vessel should be entered to perform Reactor Head venting.

C. RCS cooldown has exceeded the entry criteria for FRP-0.2A Response to Anticipated Pressurized Thermal Shock Condition. Enter FRP-0.2A and place Low Temperature Overpressure Protection in service.

D. RCS cooldown has exceeded the entry criteria for FRP-0.1A, Response to Imminent Pressurized Thermal Shock Condition. Enter FRP-0.1A and verify RCS pressure is less than RHR Pump shutoff head.

Proposed Answer: D

Explanation:

A. Incorrect. Plausible because ECCS flow has caused the cooldown but the criteria to reduce ECCS flow does not exist.
B. Incorrect. Plausible because RCS pressure and temperature are to the right of the curve but that doesn't mean a PTS challenge does not exist. FRI-0.3A does not take actions if ECCS is in service.
C. Incorrect. Plausible because placing LTOP in service would be performed if ECCS was not required.
D. Correct. An ORANGE PTS challenge exists but ECCS flow due to a Large Break LOCA is the cause and re-pressurizing is unlikely. The actions are to ensure the RHR Pumps are preserved.

Technical Reference(s) FRP-0.1A, INTEGRITY CSFST
FRP-0.1A, Step 1
Attached w/ Revision # See Comments / Reference

Proposed references to be provided during examination: None

Learning Objective: OPD1.FRP.XH1.OB601 Given specific parameters and conditions, **ANALYZE** indications to determine the nature and cause of a challenge to the Integrity Critical Safety Function in accordance with FRP-0.1 and FRP-0.2.

Question Source:
Bank # _____
Modified Bank # _____ (Note changes or attach parent)
New X

Question History: Last NRC Exam _____

Question Cognitive Level:
Memory or Fundamental Knowledge _____
Comprehension or Analysis X

10 CFR Part 55 Content:
55.41 _____
55.43 5

Comments / Reference: From FRP-0.1A, INTEGRITY CSFST	Revision # 8

INTEGRITY

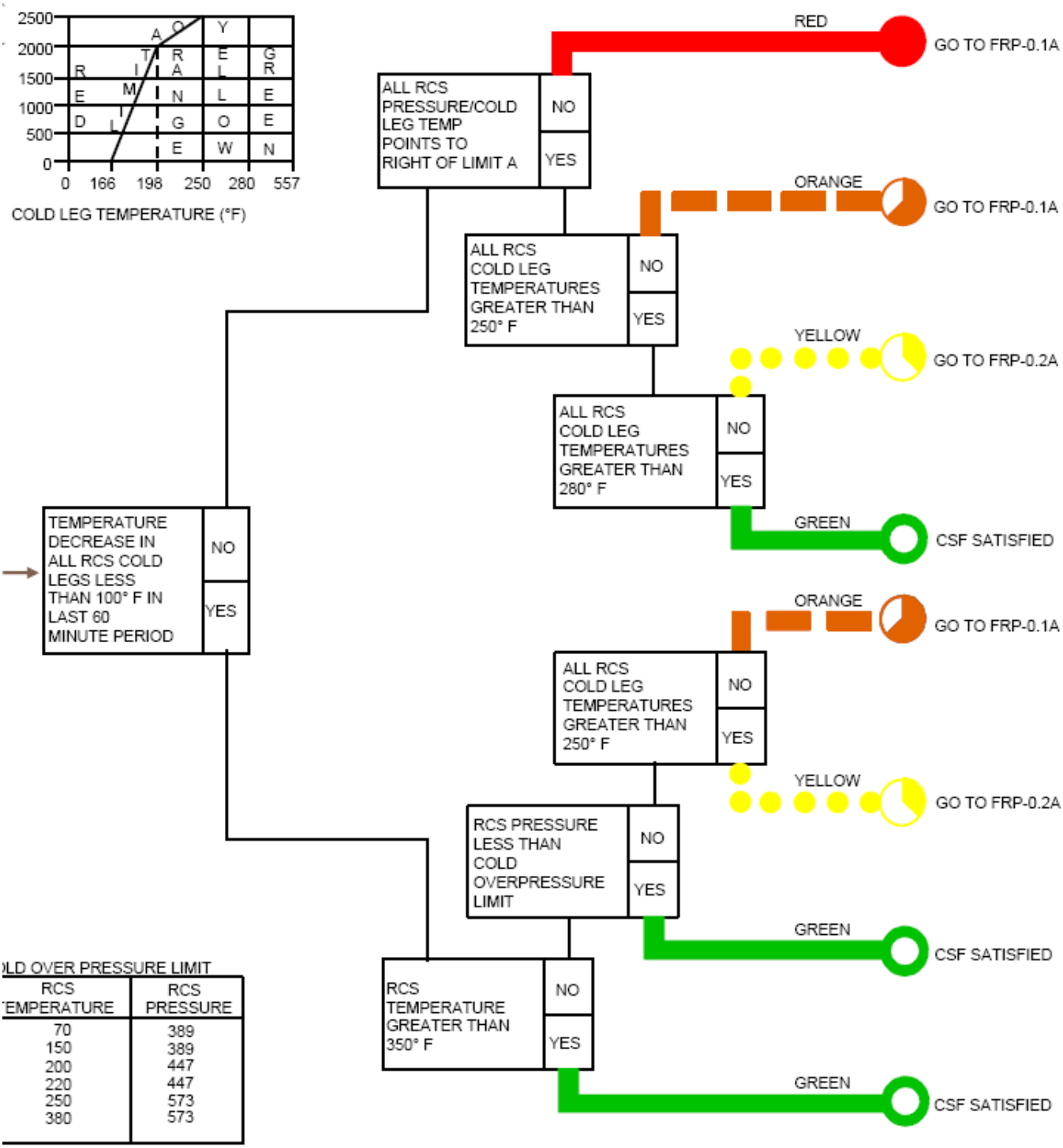

LD OVER PRESSURE LIMIT

RCS TEMPERATURE	RCS PRESSURE
70	389
150	389
200	447
220	447
250	573
380	573

Comments / Reference: From FRP-0.1A, Step 1	Revision # 8

CPSES EMERGENCY RESPONSE GUIDELINES	UNIT 1	PROCEDURE NO. FRP-0.1A
RESPONSE TO IMMINENT PRESSURIZED THERMAL SHOCK CONDITION	REVISION NO. 8	PAGE 3 OF 53

STEP	ACTION/EXPECTED RESPONSE	RESPONSE NOT OBTAINED
1	Check RCS Pressure - GREATER THAN 325 PSIG (425 PSIG FOR ADVERSE CONTAINMENT)	IF total RHR pump injection flow is greater than 750 gpm. THEN return to procedure and step in effect.

Examination Outline Cross-reference:	Level	RO	SRO
	Tier #		1
	Group #		2
	K/A #	003 AA2.03	
	Importance Rating		3.8

Dropped Control Rod: Ability to determine and interpret the following as they apply to the Dropped Control Rod: Dropped rod, using in-core/ex-core instrumentation, in-core or loop temperature measurements

Proposed Question: SRO 84

Given the following conditions with a Unit Startup in progress:

- Control Bank D is at 170 steps when the following annunciators are received:
  - 1-ALB-6D-3.5, DRPI ROD DEV.
  - 1-ALB-6D-3.7, ANY CONTROL ROD AT BOT.
- Nuclear Instrumentation System indications are as follows:
  - NI-41 indicates 37% (Quadrant 4).
  - NI-42 indicates 36% (Quadrant 2).
  - NI-43 indicates 35% (Quadrant 1).
  - NI-44 indicates 36% (Quadrant 3).
- No rod bottom lights are LIT.
- T_{ave} is not changing.
- Axial Flux Distribution is in the target band.
- Reactor power is stable.
- Quadrant Power Tilt Ratio is within specification.
- All Shutdown Group Rods are greater than 210 steps.
- Digital Rod Position Indications (DRPI) are within ±12 steps of Group Demand position.

Which ONE (1) of the following has occurred and what action is required?

Enter ABN-712, Rod Control System Malfunction, Section...

A. 2.0, Abnormal Control Rod Response.
The DRPI System is not consistent with other parameters present.

B. 3.0, Dropped or Misaligned Rod in MODE 1 or 2.
A dropped rod has occurred in Quadrant 1.

C. 4.0, Digital Rod Position Indication Malfunction.
The DRPI System is faulty.

D. 7.0, Bank Demand Step Counter Malfunction.
DRPI is greater than ± 8 steps of Group Demand position.

Proposed Answer: C

Explanation:

A. Incorrect. Plausible because one of the Rod Control System alarms is consistent with an Abnormal Control Rod Response, however, it is DRPI that has malfunctioned.
B. Incorrect. Plausible because given the indications listed one might conclude that Quadrant 1 power level was affected by a dropped rod, however, other indications such as Axial Flux Distribution and average temperature do not indicate this has occurred.
C. Correct. Given the conditions listed a Digital Rod position indication malfunction exists. Actions must be taken to monitor Group Demand Position and DRPI once every 8 hours.
D. Incorrect. Plausible if thought that Bank Demand Step Counters are not in agreement with DRPI, however, the tolerance is ± 12 steps not ± 8 steps.

Technical Reference(s): ABN-712, Section 4.0; ABN-712, Section 2.0; ABN-712, Section 3.0; ABN-712, Section 7.0 — Attached w/ Revision # See Comments / Reference

Proposed references to be provided during examination: None

Learning Objective: OP51.SYS.CR1.OB15 — **ANALYZE** the indications and **DESCRIBE** the mitigation strategy and major steps taken relative to the Rod Control System, both initial and subsequent, for:

- ABN-712, Rod Control System Malfunction

Question Source: Bank # S15.ROD.OB02-5
Modified Bank # _____ (Note changes or attach parent)
New _____

Question History: Last NRC Exam _____

Question Cognitive Level: Memory or Fundamental Knowledge _____
Comprehension or Analysis X

10 CFR Part 55 Content: 55.41 _____
55.43 2, 5

Comments / Reference: From ABN-712, Section 4.0	Revision # 10

CPSES ABNORMAL CONDITIONS PROCEDURES MANUAL	UNIT 1 AND 2	PROCEDURE NO. ABN-712
ROD CONTROL SYSTEM MALFUNCTION	REVISION NO. 10	PAGE 22 OF 52

4.0 DIGITAL ROD POSITION INDICATION MALFUNCTION

4.1 Symptoms

a. Annunciator Alarms

- DRPI URGENT FAIL (6D-3.6)
- DRPI NON-URGENT FAIL (6D-4.6)
- DRPI ROD DEV (6D-3.5)
- ANY ROD AT BOT (6D-3.7)
- ≥2 ROD AT BOT (6D-4.7)

b. Plant Indications

- DRPI disagrees with step counter by greater than 12 steps
- CONTROL ROD POSN bezel - DARK

Comments / Reference: From ABN-712, Section 2.0	Revision # 10

CPSES ABNORMAL CONDITIONS PROCEDURES MANUAL	UNIT 1 AND 2	PROCEDURE NO. ABN-712
ROD CONTROL SYSTEM MALFUNCTION	REVISION NO. 10	PAGE 3 OF 52

2.0 ABNORMAL ROD CONTROL RESPONSE IN MODE 1 OR 2

2.1 Symptoms

a. Annunciator Alarms

- CONTROL ROD CTRL URGENT FAIL (6D-1.6)
- CONTROL ROD CTRL NON-URGENT FAIL (6D-2.6)
- ANY CONTROL ROD BANK AT LO LMT (6D-1.7)
- ANY CONTROL ROD BANK AT LO-LO LMT (6D-2.7)
- DRPI ROD DEV (6D-3.5)
- ROD CTRL CAB TEMP HI (1-ALB-11B-1.12) (2-ALB-12B-1.12)

Comments / Reference: From ABN-712, Section 3.0	Revision # 10

CPSES ABNORMAL CONDITIONS PROCEDURES MANUAL	UNIT 1 AND 2	PROCEDURE NO. ABN-712
ROD CONTROL SYSTEM MALFUNCTION	REVISION NO. 10	PAGE 9 OF 52

3.0 DROPPED OR MISALIGNED ROD IN MODE 1 OR 2

3.1 Symptoms

a. Annunciator Alarms

- PR CHAN DEV (6D-3.4)
- DRPI ROD DEV (6D-3.5)
- ANY ROD AT BOT (6D-3.7)
- ≥2 ROD AT BOT (6D-4.7)
- QUADRANT PWR TILT (6D-4.10)

Comments / Reference: From ABN-712, Section 7.0	Revision # 10

CPSES ABNORMAL CONDITIONS PROCEDURES MANUAL	UNIT 1 AND 2	PROCEDURE NO. ABN-712
ROD CONTROL SYSTEM MALFUNCTION	REVISION NO. 10	PAGE 34 OF 52

7.0 BANK DEMAND STEP COUNTER MALFUNCTION

7.1 Symptoms

a. Annunciator Alarms

None

b. Plant Indications

- DRPI disagrees with step counter by greater than 12 steps

7.2 Automatic Actions

None

NOTE: If digital rod step counters are installed, the display will flash when voltage from the two Lithium batteries (8-10 year service life) in series drops below 4.3 v, indicating it is time to install new batteries.

Examination Outline Cross-reference:

Level	RO	SRO
Tier #		1
Group #		2
K/A #	032 AA2.09	
Importance Rating		2.9

Loss of Source Range NI: Ability to determine and interpret the following as they apply to the Loss of Source Range Nuclear Instrumentation: Effect of improper HV setting

Proposed Question: SRO 85

Given the following conditions:

- Unit 1 is in a Refueling outage with core re-load in progress.
- 1-NI-50A-2, Gamma-Metrics Source Range Neutron Flux is out-of-service.
- 1-NI-31B, Westinghouse Source Range Neutron Flux, has a lower voltage than 1-NI-32-B, Westinghouse Source Range Neutron Flux.

Which ONE (1) of the following describes the effect on 1-NI-31B due to the lower voltage and the applicable Technical Specification requirement if 1-NI-31B were declared out-of-service?

A. With a lower voltage the count rate should be lower and be closer to going out-of-service.
Technical Specifications require two (2) OPERABLE Channels and 1-NI-50B-2 and 1-NI-32B are both available.

B. With a lower voltage the count rate should be higher but there is no criterion for high counts.
Technical Specifications require two (2) OPERABLE channels and with only one CORE ALTERATIONS must stop immediately.

C. With a lower voltage the count rate should be higher but there is no criterion for high counts.
Technical Specifications require two (2) OPERABLE Channels and 1-NI-50B-2 and 1-NI-32B are both available.

D. With a lower voltage the count rate should be lower and be closer to going out-of-service.
Technical Specifications require two (2) OPERABLE Channels and with only one CORE ALTERATIONS must stop immediately.

Proposed Answer: D

Explanation:

A. Incorrect. Plausible because when core offload or on load are not in progress this is the Channel Check for the Westinghouse SR channels, however, Technical Specifications are not being met.
B. Incorrect. Plausible because when core offload or on load are not in progress this is the Channel Check for the Westinghouse SR channels. The Technical Specification ACTIONS are correct.
C. Incorrect. Plausible because the shiftly Channel Check is correct for core reload, however, Technical Specifications are not being met.
D. Correct. Channel Check is consistent with core configuration. As voltage drops, countrate would also. Credit can only be taken for matched pairs of channels; two Westinghouse or two Gamma-metrics.

Technical Reference(s): Tech Spec LCO 3.9.3; Tech Spec LCO 3.9.3 Bases; OPT-102A-6, Page 2 of 6 — Attached w/ Revision # See Comments / Reference

Proposed references to be provided during examination: None

Learning Objective: OP51.SYS.EC1.OB22 — **EVALUATE** the effect a loss of the Excore Instrumentation System has on the following:

- Refueling operations

Question Source:
Bank # ____
Modified Bank # ____ (Note changes or attach parent)
New X

Question History: Last NRC Exam ____

Question Cognitive Level:
Memory or Fundamental Knowledge ____
Comprehension or Analysis X

10 CFR Part 55 Content:
55.41 ____
55.43 2, 5, 6

Comments / Reference: From Tech Spec LCO 3.9.3	Amendment #105

3.9.3 Nuclear Instrumentation

LCO 3.9.3 Two source range neutron flux monitors shall be OPERABLE.

APPLICABILITY: MODE 6.

ACTIONS

CONDITION	REQUIRED ACTION		COMPLETION TIME
A. One required source range neutron flux monitor inoperable.	A.1	Suspend CORE ALTERATIONS.	Immediately
	AND		
	A.2	Suspend operations that would cause introduction of coolant into the RCS with boron concentration less than required to meet the boron concentration of LCO 3.9.1.	Immediately

Comments / Reference: From Tech Spec LCO 3.9.3 Bases	Revision # 56

B 3.9 REFUELING OPERATIONS

B 3.9.3 Nuclear Instrumentation

BASES

BACKGROUND

The source range neutron flux monitors are used during refueling operations to monitor the core reactivity condition. These detectors are located external to the reactor vessel and detect neutrons leaking from the core. Either of two functionally-equivalent sets of neutron flux monitors may be used.

The installed Westinghouse BF_3 source range neutron flux monitors are part of the Nuclear Instrumentation System (NIS). The installed source range neutron flux monitors are BF_3 detectors operating in the proportional region of the gas filled detector characteristic curve. The detectors monitor the neutron flux in counts per second. The instrument range covers six decades of neutron flux (1E+6 cps). The detectors also provide continuous visual indication in the control room. The NIS is designed in accordance with the criteria presented in Reference 1. Each portion of the Westinghouse source range neutron flux monitors has two trains and each is assigned to an independent Class 1E electrical train. These trains are physically and electrically separated in accordance with applicable IEEE Standards.

A separate Gamma-Metrics Neutron Flux Monitoring System (NFMS) is installed to satisfy the requirements of Regulatory Guide 1.97, "Instrumentation For Light-Watered-Cooled Nuclear Power Plants To Assess Plant And Environs Conditions During And Following An Accident." The Gamma-Metrics NFMS monitors neutron flux from the source range through 200% Rated Thermal Power (RTP) during all Modes of plant operation. This system utilizes two separate Safety Category I (Class 1E) fission chamber neutron detectors for all ranges of neutron flux indication. Each portion of the Gamma-Metrics instrumentation has two trains and each is assigned to a separate Class 1E electrical train. These trains are physically and electrically separated in accordance with applicable IEEE Standards.

The source range neutron flux monitors do not provide a Reactor Protection System function in Mode 6.

Because it is considered important to use detectors on opposing sides of the core to effectively monitor the core reactivity, the use of one BF_3 detector and one Gamma-Metrics detector is not permitted.

APPLICABLE SAFETY ANALYSES

Two OPERABLE source range neutron flux monitors from either set of source range neutron flux monitor systems are required to provide a visual

(continued)

	signal to alert the operator to unexpected changes in core reactivity such as with a boron dilution accident (Ref. 2) or an improperly loaded fuel assembly. The source range neutron flux monitors satisfy Criterion 3 of 10CFR50.36(c)(2)(ii).
LCO	This LCO requires that two source range neutron flux monitors be OPERABLE to ensure that redundant monitoring capability is available to detect changes in core reactivity. To be OPERABLE, each monitor must provide visual indication in the control room. Both monitors used to satisfy this LCO must be from the same set of available neutron flux monitoring systems.

Comments / Reference: From OPT-102A-6, Page 2 of 6	Revision # 23

MODE 6 SHIFTLY SURVEILLANCES

TECH SPEC	PARAMETER	ACCEPTANCE CRITERIA	CHANNEL NUMBERS	DAY	MID	NOTES
3.9.3.1	WESTINGHOUSE SOURCE RANGE NEUTRON FLUX (cps)	DURING CORE ONLOAD/OFFLOAD, COUNTS ARE CONSISTENT WITH CORE CONFIGURATION. AT OTHER TIMES, OPERABLE LOWEST READING CHANNEL READING ≥ THE OPERABLE HIGHEST READING DIVIDED BY 3.5.	1-NI-31B (CB-07)			TWO SR NI OPERABLE, EACH WITH CONTINUOUS INDICATION IN CONTROL ROOM CONSISTENT WITH CORE CONFIGURATION. SURVEILLANCE NOT REQUIRED IF 1-NI-50A-2 AND 1-NI-50B-2 ARE BEING USED FOR THE CORE ONLOAD OR OFFLOAD.
			1-NI-32B (CB-07)			
			[redacted]			
3.9.3.1	GAMMA-METRICS SOURCE RANGE NEUTRON FLUX (cps)	DURING CORE ONLOAD/OFFLOAD, COUNTS ARE CONSISTENT WITH CORE CONFIGURATION. AT OTHER TIMES, OPERABLE LOWEST READING CHANNEL READING ≥ THE OPERABLE HIGHEST READING DIVIDED BY 3.	1-NI-50A-2 (CB-07)			TWO SR NI OPERABLE, EACH WITH CONTINUOUS INDICATION IN CONTROL ROOM CONSISTENT WITH CORE CONFIGURATION. NOT REQUIRED IF 1-NI-31B AND 1-NI-32B ARE BEING USED FOR THE CORE ONLOAD OR OFFLOAD.
			1-NI-50B-2 (CB-07)			

Examination Outline Cross-reference:	Level	RO	SRO
	Tier #		2
	Group #		1
	K/A #	103 A2.03	
	Importance Rating		3.8

Containment System: Ability to (a) predict the impacts of the following malfunctions or operations on the containment system; and (b) based on those predictions, use procedures to correct, control, or mitigate the consequences of those malfunctions or operations: Phase A and B isolation

Proposed Question: SRO 86

Given the following conditions with a Large Break Loss of Coolant Accident in progress on Unit 1:

- Reactor Coolant System Cold Leg Temperature is 405°F and lowering.
- Reactor Coolant System pressure is 260 psig and lowering.
- Highest Core Exit Thermocouple is 410°F and lowering.
- Containment pressure is 51 psig and slowly rising.
- Steam Generator narrow range levels are:
  - #1 at 55% #2 at 45% #3 at 48% #4 at 47%
- Total Auxiliary Feedwater flow is 380 gpm.
- Pressurizer is empty.
- RVLIS indicates 11 inches above the Core Plate.

Which ONE (1) of the following identifies the greatest Critical Safety Function challenge and what action should be taken to mitigate the situation?

A. 1.) INVENTORY Critical Safety Function is challenged due to the voiding indicated in the Reactor Vessel.
   2.) Enter FRI-0.3A, Response to Voids in the Reactor Vessel and perform Reactor Head venting.

B. 1.) HEAT REMOVAL Critical Safety Function is challenged due to less than 460 gpm total feedwater flow.
   2.) Enter FRH-0.1A, Response to Loss of Secondary Heat Sink and raise AFW flow to greater than 460 gpm.

C. 1.) CONTAINMENT Critical Safety Function is challenged by high Containment pressure.
   2.) Enter FRZ-0.1A, Response to High Containment Pressure, and ensure proper Phase B isolation and Containment Spray alignment.

D. 1.) INTEGRITY Critical Safety Function is challenged by the rapid cooldown.
   2.) Enter FRP-0.2A, Response to Anticipated Pressurized Thermal Shock Condition, and place Low Temperature Overpressure Protection in service.

Proposed Answer: C

Explanation:

A. Incorrect. Plausible because voiding is indicated but entry criteria for FRI-0.3A is not met.
B. Incorrect. Plausible because AFW flow is less than 460 gpm but is allowed if any Steam Generator level is >50% narrow range given Adverse Containment conditions.
C. Correct. A Red Challenge exists based on Containment pressure.
D. Incorrect. Plausible because an overcooling condition exists but this is a YELLOW condition that is expected for a Large Break LOCA.

Technical Reference(s)
FRZ-0.1A, CONTAINMENT CSFST
FRI-0.3A, INVENTORY CSFST
FRH-0.1A, HEAT SINK CSFST
FRP-0.2A, INTEGRITY CSFST

Attached w/ Revision # See Comments / Reference

Proposed references to be provided during examination: None

Learning Objective:
OPD1.FRZ.XH5.OB602 Given specified Containment environmental parameters and conditions, **ANALYZE** indications to determine the nature and cause of a challenge to the Containment Integrity Critical Safety Function.

OPD1.FRZ.XH5.OB604 Given specified Containment environmental conditions, **EVALUATE** and **DIRECT** operator actions to respond to hazards to plant personnel and public safety associated with challenges to the Containment Integrity Critical Safety Function.

Question Source:
Bank # _____
Modified Bank # _____ (Note changes or attach parent)
New X

Question History: Last NRC Exam _____

Question Cognitive Level:
Memory or Fundamental Knowledge _____
Comprehension or Analysis X

10 CFR Part 55 Content:
55.41 _____
55.43 5

Comments / Reference: From FRZ-0.1A, CONTAINMENT CSFST	Revision # 8

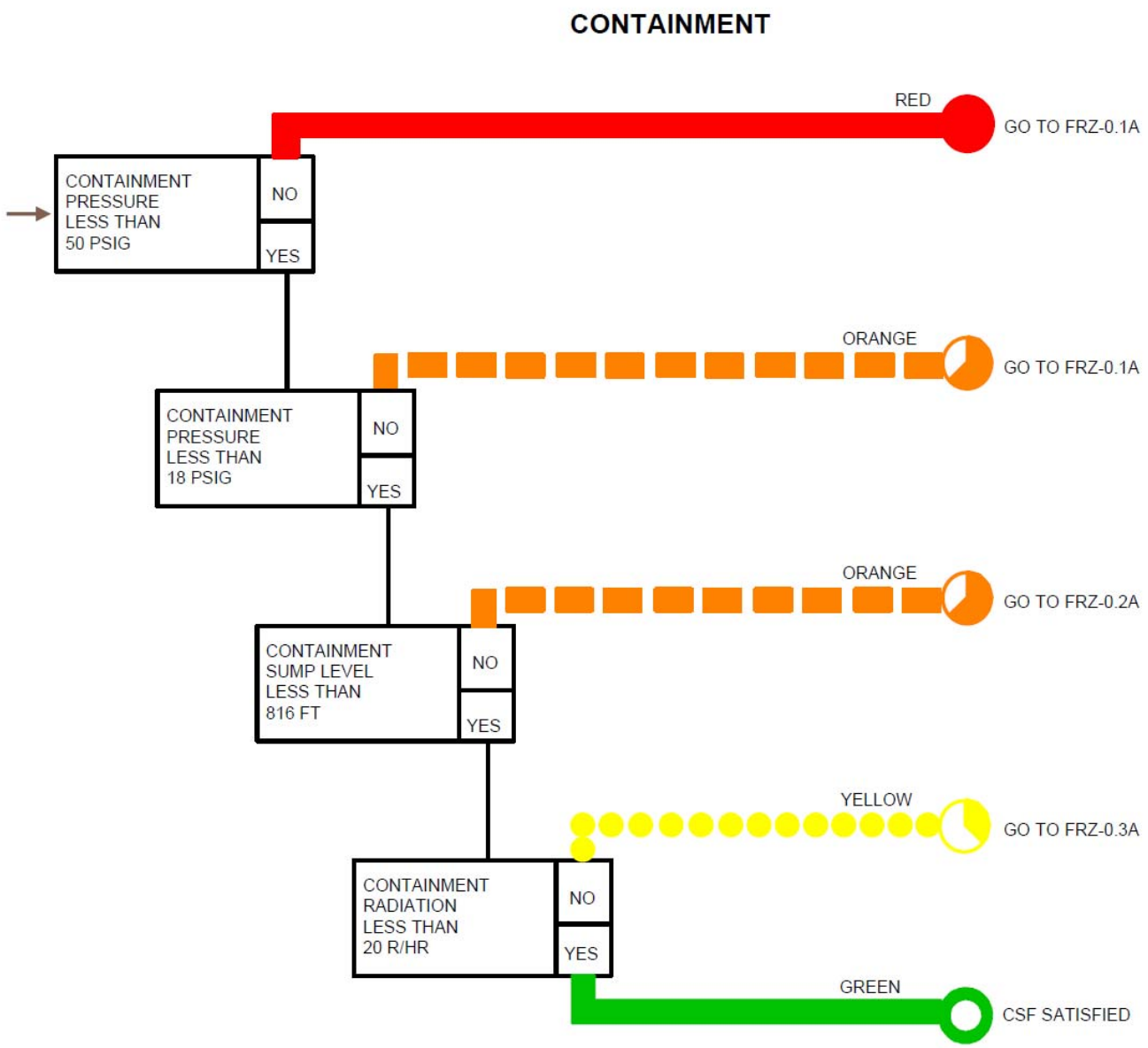

CPSES EMERGENCY RESPONSE GUIDELINES	UNIT 1	PROCEDURE NO. FRZ-0.1A
RESPONSE TO HIGH CONTAINMENT PRESSURE	REVISION NO. 8	PAGE 3 OF 25

STEP	ACTION/EXPECTED RESPONSE	RESPONSE NOT OBTAINED
1	Check Containment Pressure - GREATER THAN 50 PSIG	IF proper Containment Spray alignment has been verified in EOP-0.0A, REACTOR TRIP OR SAFETY INJECTION, THEN return to procedure and step in effect.
2	Verify Containment Isolation Phase A - APPROPRIATE MLB LIGHT INDICATION	IF flow path NOT necessary, THEN close valve(s) by performing the following: • Manually actuate Phase A and verify Phase A valves close. -OR- • Manually close Phase A valve(s) as necessary. (Refer to Attachment 2)
3	Verify Containment Ventilation Isolation - APPROPRIATE MLB LIGHT INDICATION	Manually actuate containment ventilation isolation. IF dampers not closed, THEN manually close dampers as necessary. (Refer to Attachment 3)

CPSES EMERGENCY RESPONSE GUIDELINES	UNIT 1	PROCEDURE NO. FRZ-0.1A
RESPONSE TO HIGH CONTAINMENT PRESSURE	REVISION NO. 8	PAGE 4 OF 25

STEP	ACTION/EXPECTED RESPONSE	RESPONSE NOT OBTAINED
	NOTE: Component Cooling Water supply to the unit instrument air compressors isolates on a Phase B isolation signal.	
4	Check If Containment Spray Is Required:	
	a. Containment pressure - HAS INCREASED TO GREATER THAN 18.0 PSIG • 1-ALB-2B window 1-8, CS ACT - ILLUMINATED -OR- • 1-ALB-2B window 4-11 CNTMT ISOL PHASE B ACT - ILLUMINATED -OR- • Containment pressure - GREATER THAN 18.0 PSIG	a. Return to procedure and step in effect.
	b. Verify all RCPs - STOPPED	b. Manually stop all RCPs.
	c. Verify Containment Isolation Phase B Valves- CLOSED • Verify 1-MLB-4A3 and 4B3 - ORANGE LIGHTS LIT	c. Manually actuate Phase B. IF valve(s) NOT closed, THEN manually close valve(s). (Refer to Attachment 5)
	d. Verify ECA-1.1A, LOSS OF EMERGENCY COOLANT RECIRCULATION is NOT in effect.	d. Operate containment spray per ECA-1.1A, LOSS OF EMERGENCY COOLANT RECIRCULATION. Go to Step 5.
	e. Verify containment spray pumps - RUNNING	e. Close Containment spray heat exchanger out valve(s) and start spray pump(s).
	f. Verify spray system valve alignment - PROPER EMERGENCY ALIGNMENT PER ATTACHMENT 4 • Injection phase -OR- • Recirculation phase	f. Manually align valve(s) as necessary.
	g. Verify containment spray flow.	

Comments / Reference: From FRI-0.3A, INVENTORY CSFST	Revision # 8

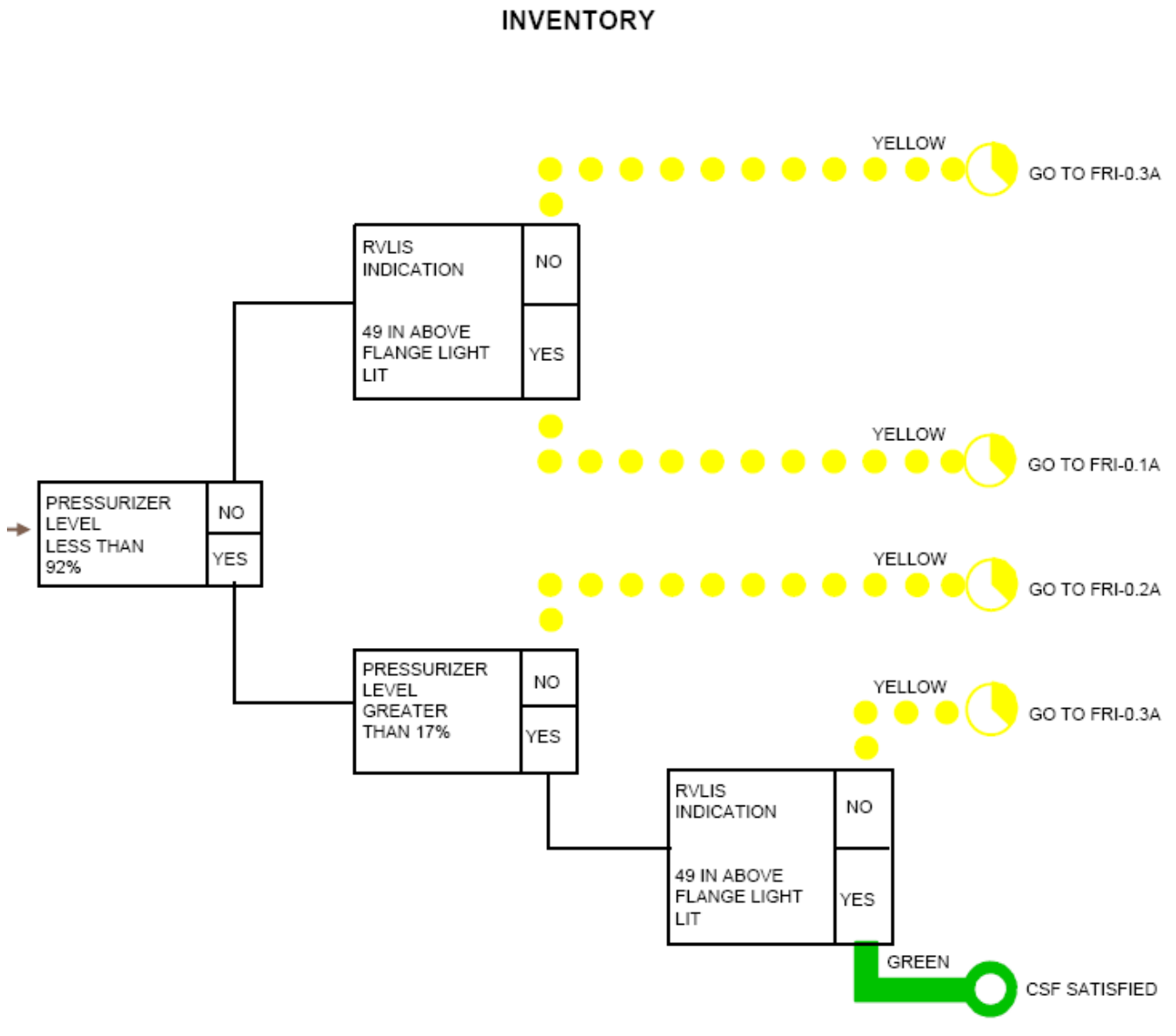

Comments / Reference: From FRH-0.1A, HEAT SINK CSFST	Revision # 8

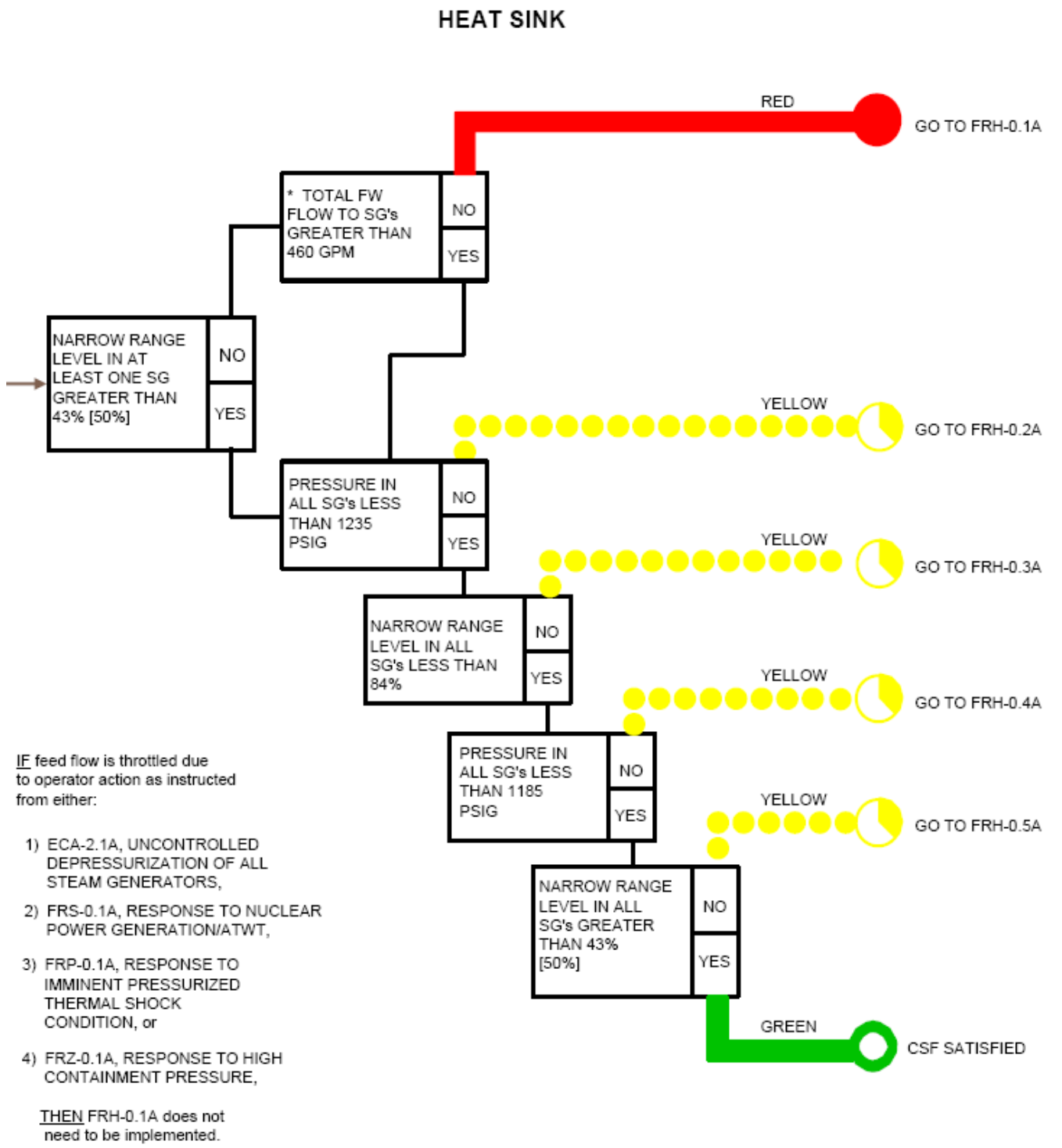

Comments / Reference: From FRP-0.2A, INTEGRITY CSFST	Revision # 8

INTEGRITY

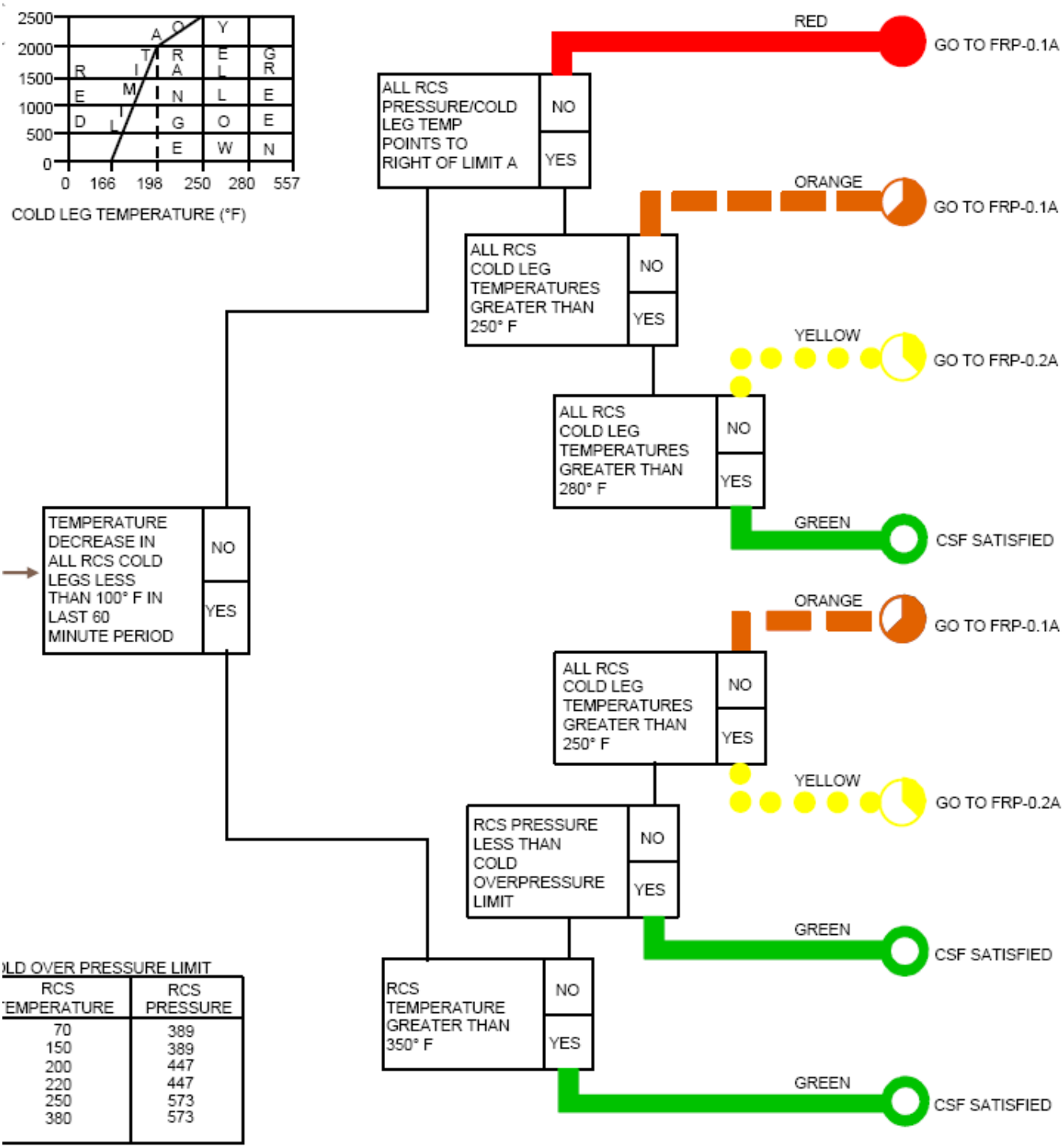

LD OVER PRESSURE LIMIT

RCS TEMPERATURE	RCS PRESSURE
70	389
150	389
200	447
220	447
250	573
380	573

Examination Outline Cross-reference:

Level	RO	SRO
Tier #		2
Group #		1
K/A #	061 A2.02	
Importance Rating		3.6

Emergency/Auxiliary Feedwater System: Ability to (a) predict the impacts of the following malfunctions or operations on the AFW; and (b) based on those predictions, use procedures to correct, control, or mitigate the consequences of those malfunctions or operations: Loss of air to steam supply valve

Proposed Question: SRO 87

Given the following condition on Unit 1:

- Steam Generator #1 has just been isolated due to a tube rupture.

Which ONE (1) of the following failures has an impact on the Steam Generator isolation and what action should be taken to mitigate the situation?

A. 1.) Severed air line to 1-HV-2452-2, SG #1 TDAFWP Steam Supply Valve.
   2.) Manually trip the TDAFW Pump.

B. 1.) Solenoid power failure to HV-2325, SG #1 Atmospheric Relief Valve.
   2.) Swap solenoid power to the opposite train power.

C. 1.) Severed air line to 1-HV-2397, #1 SG Blowdown Isolation Valve.
   2.) Close the associated downstream High Energy Line Break (HELB) Valve.

D. 1.) Solenoid power failure to 1-HV-2409, MSL 1 MSIV Drip Pot Isolation Valve.
   2.) Locally isolate steam traps upstream of #1 Steam Generator MSIV.

Proposed Answer: A

Explanation:

A. Correct. With a severed airline the valve will fail open and continue a release to atmosphere. EOP-3.0A directs the operator to trip the TDAFW Pump.
B. Incorrect. Plausible because knowledge of failure mode is required and alternate solenoid power exists, however, because the valve fails closed Steam Generator isolation is not impacted.
C. Incorrect. Plausible because knowledge of failure mode is required and HELB Valves are available, however, because the valve fails closed Steam Generator isolation is not impacted.
D. Incorrect. Plausible because knowledge of failure mode is required and actions are correct for failure to be able to close, however, because the valve fails closed Steam Generator isolation is not impacted.

Technical Reference(s)
- EOP-3.0A, Step 3.d, RNO Action
- OP51.SYS.MR1.LM, Pages 32, 48 & 52
- OP51.SYS.SB1.LN, Page 15

Attached w/ Revision # See Comments / Reference

Proposed references to be provided during examination: None

Learning Objective: OPD1.EO3.XG5.OB21

Given specific plant and/or monitoring equipment conditions, **DESCRIBE** management expectations regarding:

- Selection of proper procedures and mitigation strategies based on monitoring equipment trends, previous conditions, and/or alarms.

OP51.SYS.AF1.OB010

STATE the physical connections and **EVALUATE** the cause-effect relationships between the Auxiliary Feedwater System and the following systems, components or events:

- Steam Generators

Question Source:

Bank # _____

Modified Bank # _____ (Note changes or attach parent)

New X

Question History: Last NRC Exam _____

Question Cognitive Level:

Memory or Fundamental Knowledge _____

Comprehension or Analysis X

10 CFR Part 55 Content:

55.41 _____

55.43 5

Comments / Reference: From EOP-3.0A, Step 3.d, RNO Action	Revision # 8

CPSES EMERGENCY RESPONSE GUIDELINES	UNIT 1	PROCEDURE NO. EOP-3.0A
STEAM GENERATOR TUBE RUPTURE	REVISION NO. 8	PAGE 5 OF 101

STEP	ACTION/EXPECTED RESPONSE	RESPONSE NOT OBTAINED
	c. Close ruptured SG(s) main steamline isolation, and SG drippot isolation valves	c. Perform the following: 1) Close all remaining main steamline isolation valves. 2) Place STM DMP INTLK SELECT switches 43/1-SDA and 43/1-SDB in OFF to close the Steam Dump Valves. 3) Close 1-HS-3228, MS TO AUX STM SPLY VLV. 4) Locally close ruptured SG(s) main steamline isolation valve. 5) IF any ruptured SG(s) main steam line isolation valves cannot be closed, THEN complete valve lineup per Attachment 4 while continuing with this procedure. 6) Use intact SG(s) atmospheric for steam dump during subsequent RCS cooldown. IF any ruptured SG can NOT be isolated from at least one intact SG, THEN go to ECA-3.1A, SGTR WITH LOSS OF REACTOR COOLANT - SUBCOOLED RECOVERY DESIRED, Step 1.
	d. Pull-Out steam supply valve handswitch from ruptured SG(s) to Turbine Driven AFW pump.	d. IF at least one Motor Driven AFW pump running, THEN manually trip Turbine Driven AFW pump. IF Turbine Driven AFW pump is NOT tripped, THEN locally isolate affected steam supply valve(s) to Turbine Driven AFW pump.
	e. Verify blowdown isolation valve(s) from ruptured SG(s) - CLOSED	e. Manually close valve(s).

Comments / Reference: From OP51.SYS.MR1.LM, Page 32	Revision # 03/31/08

Turbine Driven Auxiliary Feedwater Pump Steam Supply (Figure 5)

Tapping off before the SG 1 and SG 4 MSIVs, redundant 4 inch TDAFWP steam supply lines and air operated valves ensure a diverse source of steam is always available to operate the TDAFWP. Each line also has a stop check valve, downstream of the TDAFWP steam supply valve, to prevent reverse flow from feeding a Main Steam line break.

TDAFWP steam supply valves u-HV-2452-1 (Train “A” – SG 4) and u-HV-2452-2 (Train “B” – SG 1) are operated from the Control Room at CB-09. These valves are normally closed during plant operation. They are held closed by instrument air and are provided with backup Safety Class 3 air accumulators since they are required to be remotely operated following a safe shutdown earthquake coincident with a loss of offsite power.

Upon a loss of power to the solenoids or a loss of air will cause the TDAFWP steam supply valves to open. This is because spring pressure will “fail” the valve in the “safe” direction thereby ensuring steam is available to operate the TDAFWP.

Comments / Reference: From OP51.SYS.MR1.LM, Page 48	Revision # 03/31/08

Atmospheric Relief Valve Control (Figure 12)

PV-2325/2326/2327/2328 are modulating, air operated, relief valves which are automatically controlled by a pressure transmitter on each Main Steam line. Each relief valve has an M/A station on CB-08 for remote manual operation and for adjustment of the setpoint pressure. Each atmospheric relief valve has open/close indicating lights on the vertical section of CB-07. Normal setpoint pressure is 1125 psig. The relief valves fail closed on a loss of air supply to the actuator and upon loss of electrical power.

Comments / Reference: From OP51.SYS.MR1.LM, Page 52	Revision # 03/31/08

Main Steam Line Drain Control (upstream MSIV)

One drain pot is located upstream of each MSIV. Moisture that accumulates in the pot passes through an isolation valve, a drain orifice, drain valve, and then to the main condenser.

The isolation valve is air operated and is interlocked with the MSIVs. Each isolation valve is operated from its own handswitch on CB-08, HS-2409 / 2410 / 2411 / 2412. Each handswitch is CLOSE / AUTO / OPEN, spring return to AUTO, with green / red position indicating lights. The isolation valves fail closed on a loss of air or electrical power. These valves close when the associated MSIV is closed from the MSIV handswitch, and on a Main Steam Isolation signal. These isolation valves also have indication on MLB-4A1 and 4B1 (2 each).

The air operated drain valves fail open and can be manually opened from momentary pushbuttons on CB-08, HS-2371 / 2372 / 2373 / 2374. Normally, the drain valves open automatically on a high level in the drain pot, and close when the high level clears. A high high level in the drain pot will give a white indicating light on CB-08, and alarm on ALB-7A.

Comments / Reference: From OP51.SYS.SB1.LN, Page 15	Revision # 12/08/08

The SG Blowdown Isolation Valves are opened by energizing two 125 VDC solenoids. Once the solenoids are energized, air is ported to the diaphragm of the valve actuator causing the valve to move to its open position. The solenoids are arranged in a series manner in the air supply piping. Taking the handswitch to the "OPEN" position "sets" the retentive memory logic which energizes the two solenoids. Releasing the valve handswitch allows the handswitch to spring return to its "AUTO" position. The solenoids remain energized as long as none of its automatic closure signals are present.

Examination Outline Cross-reference:

Level	RO	SRO
Tier #		2
Group #		1
K/A #	010 G 2.2.44	
Importance Rating		4.4

Pressurizer Pressure Control System: Equipment Control: Ability to interpret control room indications to verify the status and operation of a system, and understand how operator actions and directives affect plant and system conditions

Proposed Question: SRO 88

Given the following conditions with Unit 1 is at 100% power:

- Pressurizer Pressure Controller, PS-455F, is selected to Channel 455 / 458.
- Pressurizer Pressure Recorder is selected to Channel 457 when the following indications are observed:
  - PORV 456 indicates open.
  - Pressurizer Spray Valves are closed.
- The following annunciators are lit:
  - 1-ALB-5B-3.1, PRZR PORV OUT TEMP HI
  - 1-ALB-5B-2.3, PRT TEMP HI
  - 1-ALB-5B-3.3, PRT PRESS HI
  - 1-ALB-5C-2.1, PRZR PRESS HI
  - 1-ALB-5C-3.1, PRZR 1 OF 4 PRESS HI
  - 1-ALB-5C-1.4, PORV 455A/456 NOT CLOSE

Which ONE (1) of the following describes the condition causing the alarms and the required actions to take?

A. Pressure Channel 456 has failed high.
Enter EOP-0.0A, Reactor Trip or Safety Injection and close the PORV Block Valve for PCV-456.

B. Pressure Channel 458 has failed high.
Enter ABN-705, Pressurizer Pressure Malfunction and ensure RCS pressure is less than 2335 psig and then close PORV 456.

C. Pressure Channel 455 has failed high.
Enter EOP-0.0A, Reactor Trip or Safety Injection and ensure RCS pressure is less than 2335 psig and then close PORV 456.

D. Pressure Channel 457 has failed high.
Enter ABN-705, Pressurizer Pressure Malfunction and close the PORV Block Valve for PCV-456.

Proposed Answer: B

Explanation:

A. Incorrect. Plausible because this RNO Action would be correct if the PORV did not close, however, the Reactor has not tripped and EOP-0.0A entry is not required.
B. Correct. In the 455/458 position the only function 458 has is to open PCV-456 on high pressure and give the Hi Pressure alarm. This is the correct procedure entry for this condition.
C. Incorrect. Plausible because this procedure could be referenced, however, only if PT-455 failed high would it have opened PORV 455A.
D. Incorrect. Plausible because the procedure entry is correct and PT-457 provides a PORV input but it is a permissive to the other PORV.

Technical Reference(s) OP51.SYS.PP1.LN, Pages 12 & 13
ABN-705, Section 2.2
ABN-705, Step 2.2.1

Attached w/ Revision # See Comments / Reference

Proposed references to be provided during examination: None

Learning Objective: OP51.SYS.PP1.OB14

ANALYZE the indications and **DESCRIBE** the mitigation strategy for the following procedures as they affect the Pressurizer Pressure and Level Control system:

- ABN-705, Pressurizer Pressure Malfunction

Question Source: Bank # _____
Modified Bank # _____ (Note changes or attach parent)
New X

Question History: Last NRC Exam _____

Question Cognitive Level: Memory or Fundamental Knowledge _____
Comprehension or Analysis X

10 CFR Part 55 Content: 55.41 _____
55.43 5

Comments / Reference: From OP51.SYS.PP1.LN, Pages 12 & 13	Revision # 03/01/03

Each pressure detector is associated with a pressure transmitter that develops an electronic signal for remote indication. Transmitter u-PT-455F provides indication at the Remote Shutdown Panel. Transmitters u-PT-455, 456, 457, and 458 provide Control Room indication, control, protection, and alarm functions. 118VAC instrument buses supply power to the transmitters, uPC1 to PT-455, uPC2 to PT-456, uPC3 to PT-457, and uPC4 to PT-458. Power is supplied to each instrument channel from separate instrument busses in order to provide electrical separation.

Pressure channels 455, 456, 457 and 458 provide indication on the Main Control Board with 1700 - 2500 psig meters on control board panel u-CB-05. Each of these channels also provides input to the Solid State Protection System (SSPS) for the generation of reactor protection signals. A switch on the control board selects one of these channels to supply a chart recorder on u-CB-05. **(See Figure 3)** Another switch (1/u-PS-455F), located on u-CB-05, is a three-position switch that directs two channels to provide controlling functions. The center position of the switch, labeled 455/456, is normally selected. In this position, channels 455 and 456 are selected for control. The position labeled 457/456 substitutes channel 457 for channel 455, and the position labeled 455/458 substitutes channel 458 for channel 456.

The controlling signals function as follows:

- Channel 455 normally selected - channel 457 alternate:
- Provides actual pressure signal for the PRZR master pressure controller u-PK-455A
- Controls both spray valve controllers u-PK-455B & C
- Controls variable heater output
- Actuates power operated relief valve u-PCV-455A at +100 psig error signal
- Actuates pressure deviation hi alarm at +75 psig error signal
- Actuates low pressure alarm and energize backup heaters at –25 psig error signal
- Channel 456 normally selected - channel 458 alternate:
- Actuates power operated relief valve u-PCV-456 at 2335 psig
- Actuates high pressure alarm at 2310 psig

Comments / Reference: From ABN-705, Section 2.2	Revision # 12

CPNPP ABNORMAL CONDITIONS PROCEDURES MANUAL	UNIT 1 AND 2	PROCEDURE NO. ABN-705
PRESSURIZER PRESSURE MALFUNCTION	REVISION NO. 12	PAGE 4 OF 26

2.2 Automatic Actions

NOTE: Control responses will only occur if failure occurs in a channel selected for control.

a. Control response for a pressurizer pressure channel failure HIGH.

1) PORV will open until pressure is reduced to 2185 psig, then the other channel will close the PORV.

- 1/u-PCV-455A, PRZR PORV
- 1/u-PCV-456, PRZR PORV

2) Variable heaters are turned off.

- 1/u-PCPR, PRZR CTRL HTR GROUP C

3) Both spray valves open.

- u-ZL-455B, RC LOOP 1 PRZR SPR VLV
- u-ZL-455C, RC LOOP 4 PRZR SPR VLV
- u-PK-455B, RC LOOP 1 PRZR SPR VLV CTRL
- u-PK-455C, RC LOOP 4 PRZR SPR VLV CTRL

b. Control response for a pressurizer pressure channel failure LOW.

NOTE: Transferring to alternate channel while still in AUTO may cause the PORV to open.

1) Control and backup heaters come on and PORVs will open at 2335 psig.

- 1/u-PCPR, PRZR CTRL HTR GROUP C
- 1/u-PCPR1, PRZR BACKUP HTR GROUP A
- 1/u-PCPR2, PRZR BACKUP HTR GROUP B
- 1/u-PCPR3, PRZR BACKUP HTR GROUP C
- 1/u-PCV-455A, PRZR PORV
- 1/u-PCV-456, PRZR PORV

Comments / Reference: From ABN-705, Step 2.2.1	Revision # 12

CPNPP ABNORMAL CONDITIONS PROCEDURES MANUAL	UNIT 1 AND 2	PROCEDURE NO. ABN-705
PRESSURIZER PRESSURE MALFUNCTION	REVISION NO. 12	PAGE 5 OF 26

2.3 Operator Actions

ACTION/EXPECTED RESPONSE	RESPONSE NOT OBTAINED

NOTE:
- Diamond steps denote initial action.
- A PORV is not considered INOPERABLE when its actuation instrumentation is not functioning.
- Power should NOT be removed from a block valve closed in accordance with this procedure section.

☐ ◇1 Verify PORV - CLOSED

IF PORV OPEN and RCS Pressure <2335 psig,
THEN close affected PORV
AND
close associated block valve.

Examination Outline Cross-reference:

Level	RO	SRO
Tier #		2
Group #		1
K/A #	004 G 2.1.7	
Importance Rating		4.7

Chemical and Volume Control System: Conduct of Operations: Ability to evaluate plant performance and make operational judgments based on operating characteristics, reactor behavior, and instrument interpretation

Proposed Question: SRO 89

Given the following conditions:

- Unit 1 is operating at 100% power at MOL conditions.
- The Reactor Operator reports that it appears to be taking less dilution to maintain power and RCS temperature in the last two days and that VCT level has been steady at 50% over that same period.
- Axial Flux Difference has been in a small oscillation for the past few days since Rod Exercising was completed.

Which ONE (1) of the following describes the most likely cause of power remaining steady at 100% with no operator positive reactivity additions and what actions should be taken, if any?

A. A small leakage path through the cation demineralizer is diluting the RCS.
Enter SOP-103A, Chemical and Volume Control System Operation and bypass the ion exchangers and monitor power level and RCS temperature for changes.

B. The Axial Flux Difference is causing power changes.
Enter OPT-403, Axial Flux Difference and contact Reactor Engineering to see if dampening is required.

C. The burnout of burnable shims is causing a positive reactivity effect.
Refer to TDM-105A, Reactor Boron Data and have Reactor Engineering verify using the curve for Critical Boron versus Burnup, U1C14 NDR Figure 4.1.

D. A small, continuous dilution is occurring.
Enter ABN-105, CVCS System Malfunction and isolate potential in-leakage sources until the source is isolated.

Proposed Answer: D

Explanation:

A. Incorrect. Plausible because this could be a positive reactivity addition but there would be no gain of inventory to keep VCT level stable. SOP-103A, Step 5.3.6 would be used to bypass the demineralizers
B. Incorrect. Plausible because AFD can affect power indications however there would be no gain of inventory to keep VCT level stable. OPT-403 would be used to monitor AFD when automated monitoring is not available.
C. Incorrect. Plausible because early in core life this phenomenon does occur however there would be no gain of inventory to keep VCT level stable.
D. Correct. The in-leakage is helping to maintain Volume Control Tank level while the reduced boron concentration is acting as a continuous dilution of the RCS. This is the correct procedure to enter to locate and isolate the leak.

Technical Reference(s): ABN-105, Section 8.0; SOP-103A, Step 5.3.6; TDM-105A, Section 1.0; OPT-403, Section 1.0 — Attached w/ Revision # See Comments / Reference

Proposed references to be provided during examination: None

Learning Objective: OP51.SYS.CS1.OB10 — **STATE** the physical connections and **EVALUATE** the cause-effect relationships between the CVCS and the following systems, components or events:

- Uncontrolled boration or dilution.

OP51.SYS.CS1.OB14 — **DETERMINE** how VCT level, pressurizer level and makeup frequency can be used to detect an RCS or CVCS leak.

Question Source: Bank # ____ Modified Bank # ____ (Note changes or attach parent) New X

Question History: Last NRC Exam ____

Question Cognitive Level: Memory or Fundamental Knowledge ____ Comprehension or Analysis X

10 CFR Part 55 Content: 55.41 ____ 55.43 5, 6

Comments / Reference: From ABN-105, Section 8.0	Revision # 7

CPNPP ABNORMAL CONDITIONS PROCEDURES MANUAL	UNIT 1 AND 2	PROCEDURE NO. ABN-105
CHEMICAL AND VOLUME CONTROL SYSTEM MALFUNCTION	REVISION NO. 7	PAGE 35 OF 41

8.3 Operator Actions

ACTION/EXPECTED RESPONSE	RESPONSE NOT OBTAINED
☐ 3 Verify RCS Boron Concentration - NORMAL per TDM-105A/B	Perform the following: a. Contact Chemistry to Sample: ● RCS ● VCT ● PRZR b. Borate per SOP-104A/B c. Notify Engineering
☐ 4 Verify CVCS Demins NOT recently placed in service.	Place 1/u-TCV-129, LTDN DIVERT VLV in VCT.
☐ 5 Verify NO Uncontrolled Positive Reactivity Addition.	Emergency Borate per ABN-107.
☐ 6 Verify VCT conditions - NORMAL ● Level NOT Increasing ● 1/u-LCV-112A, VCT LVL CTRL VLV in VCT position	Perform the following: a. Ensure 1/u-FCV-111A, RMUW BLNDR FLO CTRL VLV - CLOSED b. Ensure 1/u-FCV-111B, RCS MU TO VCT ISOL VLV - CLOSED
☐ 7 Verify NO Chemical Addition in progress	Perform the following: a. Ensure uCS-8453, CVCS CHEM MIX TK u-01 IN VLV [AB 822 Rm X-209 (X-208)] - CLOSED b. Ensure uCS-8435, CVCS CHEM MIX TK u-01 OUT VLV (AB 822 Rm X-209 (X-208) - CLOSED

☐	8	Verify 43/u-TRS, BTRS MODE SELECT - OFF	Perform the following: a. IF placing Demin in service, THEN flush Demin per SOP-106A/B b. IF Boration in progress, THEN notify Chemistry to sample BTRS. c. IF Dilution is confirmed by Chemistry, THEN shutdown BTRS per SOP-106A/B.
☐	9	Verify CCW Surge Tank Level - NOT Decreasing	Perform the following: a. OPEN u-8400, RCP SL LKOFF TO SL WTR HX u-01 BYP VLV (SFGD 810 Rm u-080) b. CLOSE u-8398A, RCP SL LKOFF TO SL WTR HX u-01 IN ISOL VLV (SFGD 810 Rm u-080) c. CLOSE u-8398B, RCP SL LKOFF TO SL WTR HX u-01 OUT ISOL VLV (SFGD 810 Rm u-080) d. Notify Chemistry to sample Seal Water Heat Exchanger for CCW leak.
☐	10	Verify NO Unexplained Positive Reactivity Addition.	Emergency Borate per ABN-107.
☐	11	Verify adequate Shutdown Margin per OPT-301.	
☐	12	Restore demins to service, if desired per SOP-103A/B.	

Comments / Reference: From SOP-103A, Step 5.3.6	Revision # 17

CPNPP SYSTEM OPERATING PROCEDURE MANUAL	UNIT 1	PROCEDURE NO. SOP-103A
CHEMICAL AND VOLUME CONTROL SYSTEM	REVISION NO. 17	PAGE 37 OF 131

5.3.6 Removing Mixed Bed Demineralizer 1-01 from Service

This section describes the steps to remove Mixed Bed Demineralizer 1-01 from service.

NOTE: Standard Clearance # 5125 exists for isolation of CVCS MIX BED DEMIN 1-01, if necessary.

☐ A. Notify Chemistry prior to removing Mixed Bed Demineralizer 1-01 from service.

☐ B. OPEN 1CS-0224, CVCS MIX BED DEMIN BYPASS VLV. (UVG-32 sw corner)

☐ C. CLOSE 1-8522A-RO, CVCS MIX BED DEMIN 1-01 OUT VLV RMT OPER.

☐ D. CLOSE 1-8524A-RO, CVCS MIX BED DEMIN 1-01 IN VLV RMT OPER.

Comments / Reference: From TDM-105A, Section 1.0	Revision # 6

CPSES TECHNICAL DATA MANUAL	UNIT 1	PROCEDURE NO. TDM-105A
REACTOR BORON DATA	REVISION NO. 6	PAGE 2 OF 4

1.0 PURPOSE

This procedure contains the Technical Data related to the Boron Concentration (C_B) in the Reactor Coolant System.

2.0 APPLICABILITY

This Technical Data applies to Unit 1 operation only.

3.0 REFERENCES

3.1 ODA-208, Preparation and Control of Technical Data.

3.2 Startup and Operations Report CPSES Unit 1, Current Cycle

4.0 ATTACHMENTS/FORMS

None

Comments / Reference: From OPT-403, Section 1.0	Revision # 10

CPNPP OPERATIONS TESTING MANUAL	UNIT COMMON	PROCEDURE NO. OPT-403
AXIAL FLUX DIFFERENCE	REVISION NO. 10	PAGE 2 OF 5

1.0 PURPOSE

This procedure satisfies Axial Flux Difference (AFD) monitoring when automated monitoring is NOT available. The requirements of TRS 13.2.32.1 and the penalty time tracking for TS 3.2.3.1 (for Unit 1) is met by monitoring and logging indicated AFD for each OPERABLE excore channel. A frequency of 30 minutes for logging data is used to ensure Unit 1 penalty minutes are accurately tracked.

TR LCO 13.2.32 has been revised to remove penalty minute tracking, remove the target band requirements and only be applicable above 50% RTP. This change will not be applicable to Unit 1 until after Cycle 13 (startup during 1RF13). OPT-403 will be revised again during 1RF13 to remove all discussion of penalty minutes, target band and any "for Unit 1" phrases. The specific indication of cycle numbers have purposely not been incorporated to simplify the instructions.

The actual TRS frequency requirements are as follows:

NOTE: The logged values of the indicated AFD shall be assumed to exist during the interval preceding each logging.

- Once per hour for the first 24 hours that the AFD Monitor Alarm is inoperable. (TRS 13.2.32.1).
- Once per 30 minutes when the AFD Monitor Alarm is inoperable for >24 hours. (TRS 13.2.32.1).
- For Unit 1, following restoration of the AFD Monitor Alarm, once per hour for the first 24 hours when the AFD Monitor Alarm penalty deviation time is NOT current. (TRS 13.2.32.1).
- For Unit 1, log accumulated penalty deviation outside of the required target band (TS 3.2.3.1):

  A. One minute penalty deviation for each 1 minute of POWER OPERATION outside of the target band at THERMAL POWER levels ≥ 50% of RATED THERMAL POWER, and

  B. One-half minute penalty deviation for each 1 minute of POWER OPERATION outside of the target band at THERMAL POWER levels between 15% and 50% of RATED THERMAL POWER.

Examination Outline Cross-reference:	Level	RO	SRO
	Tier #		2
	Group #		1
	K/A #	013 A2.05	
	Importance Rating		4.2

Engineered Safety Features Actuation System: Ability to (a) predict the impacts of the following malfunctions or operations on the ESFAS; and (b) based on those predictions, use procedures to correct, control, or mitigate the consequences of those malfunctions or operations: Loss of DC control power

Proposed Question: SRO 90

Given the following conditions:

- Unit 1 experienced a loss of power 3 hours ago and entered ECA-0.0A, Loss of All AC Power.
- Section 1 of Attachment 2, DC Load Shedding, was completed two (2) hours ago.
- The operator stationed locally reports that DC Buses 1ED1 and 1ED2 have dropped below 110 VDC.

Which ONE (1) of the following identifies the critical low voltage limit, the limiting component, and what action should be taken to mitigate the situation?

A. 1.) Below 105 VDC the Steady-State Protection System (SSPS) components will be drawing excessive amps and cause component failure.
   2.) Perform Section 2 of Attachment 2, DC Load Shedding and open the breakers for SSPS components.

B. 1.) Below 108 VDC the MSIV solenoids can fail and cause Main Steam Isolation Valves to re-open.
   2.) Manually isolate air to the hydraulic pump at each Main Steam Isolation Valve.

C. 1.) Below 105 VDC the ability to recover the diesels or control breakers for recovery may be lost.
   2.) Perform Section 2 of Attachment 2, DC Load Shedding to conserve Battery BT1ED1 or BT1ED2 for subsequent Diesel Generator starts.

D. 1.) Below 108 VDC the Turbine Driven Auxiliary Feedwater (TDAFW) Pump Feedwater Control may become erratic and lost.
   2.) Perform Attachment 6, TDAFW Pump Flow Control for local manual operation of Flow Control Valves 1-HV2459, 2460, 2461, and 2462.

Proposed Answer: C

Explanation:

A. Incorrect. Plausible because lower voltages do cause higher amps, however, most of the breakers for SSPS are already open from Section 1.
B. Incorrect. Plausible because MSIV solenoids do have a failure mechanism that can cause inadvertent opening, however, the first section of Attachment 2 has already isolated air to the MSIVs.
C. Correct. Full DC load shedding is to protect the ability to flash the field for the diesels and have breaker operability for AC recovery. The load shedding actions ensure power as long as possible to these components.
D. Incorrect. Plausible because loss of power to the flow control valves would require local control, however, local control was taken after 30 minutes due to loss of air.

Technical Reference(s)
- ECA-0.0A, Attachment 2, Page 12 of 17
- ECA-0.0A, Attachment 7, Step 16 Bases
- ECA-0.0A, Step 15 Caution
- ECA-0.0A, Attachment 2, Page 10 of 17

Attached w/ Revision # See Comments / Reference

Proposed references to be provided during examination: None

Learning Objective: OPD1.ECA.XG1.OB501

Given specific plant and/or monitoring equipment conditions, **DESCRIBE** the Senior Reactor Operator's responsibilities in accordance with CPSES Administrative Guidelines. Discussion should include:

- Selection of procedures and mitigation strategies based on system conditions, system parameters, and/or alarms

Question Source:
- Bank # _____
- Modified Bank # _____ (Note changes or attach parent)
- New X

Question History: Last NRC Exam _____

Question Cognitive Level:
- Memory or Fundamental Knowledge _____
- Comprehension or Analysis X

10 CFR Part 55 Content:
- 55.41 _____
- 55.43 5

Comments / Reference: From ECA-0.0A, Attachment 2, Page 12 of 17	Revision # 8

ATTACHMENT 2
PAGE 12 OF 17

DC LOAD SHEDDING

NOTE: Each safeguards battery is capable of carrying all loads for a period of 4 hours in the event of a Loss of All AC Power condition. Load shedding performed in Step 1 should extend the time battery voltage is maintained. The minimum system voltage required for equipment operation is approximately 105 volts.

NOTE: The following steps provide additional load shed for DC Bus 1ED1 OR 1ED2 to conserve DC power for subsequent power restoration activities.

2. IF DC Bus Voltage is LESS THAN 110 VOLTS AND Plant Staff determines it necessary to conserve Battery BT1ED1 or BT1ED2 for subsequent Diesel Generator starts OR Offsite Power breaker closure, THEN perform the following:

   a. IF Train A Safeguards bus is most probable to be restored, THEN perform the following load shed of 1ED1:

      1) Reference ABN-603, LOSS OF PROTECTION OR INSTRUMENT BUS to:

      ☐ • Evaluate equipment and indication that will be lost when 1PC1 and 1EC1 are de-energized.

      ☐ • Verify equipment and indication supplied from BT1ED2 via 1PC2 and 1EC2 is available.

      ☐ • IF sufficient equipment and indication that will be supplied from BT1ED2 (via 1PC2, 1EC2) is NOT available, THEN Plant Staff should evaluate plant conditions to determine which DC loads to shed.

      2) Due to loss of input signals, place Pressurizer PORV handswitches to CLOSE:

      ☐ • 1/1-PCV-455A, PRZR PORV

      ☐ • 1/1-PCV-456, PRZR PORV

Comments / Reference: From ECA-0.0A, Step 15 Caution	Revision # 8

CPSES EMERGENCY RESPONSE GUIDELINES	UNIT 1	PROCEDURE NO. ECA-0.0A
LOSS OF ALL AC POWER	REVISION NO. 8	PAGE 15 OF 86

STEP	ACTION/EXPECTED RESPONSE	RESPONSE NOT OBTAINED

CAUTION: Damage to a Turbine Driven AFW Pump may result from continuous operation (more than 20 minutes) at flows less than 130 gpm.

NOTE: The TDAFW pump flow control valve (1-HV-2459, 2460, 2461, and 2462) accumulators have only a thirty (30) minute air supply. These are fail open valves. If flow needs to be adjusted, then refer to Attachment 6 to attain local control.

*15	Check Intact SG Levels:	
	a. Narrow range level - GREATER THAN 43% (50% FOR ADVERSE CONTAINMENT)	a. Maintain maximum AFW flow until narrow range level greater than 43% (50% FOR ADVERSE CONTAINMENT) in at least one intact SG.

Comments / Reference: From ECA-0.0A, Attachment 7, Step 16 Bases	Revision # 8

CPSES EMERGENCY RESPONSE GUIDELINES	UNIT 1	PROCEDURE NO. ECA-0.0A
LOSS OF ALL AC POWER	REVISION NO. 8	PAGE 71 OF 86

ATTACHMENT 7
PAGE 12 OF 27

BASES

"Level increase in an uncontrolled manner" means that the operator cannot control level using available equipment, i.e., level continues to rise even when all feed flow valves to that SG are fully closed.

This is a Continuous Action Step.

Step 16: Following loss of all AC power, the station batteries are the only source of electrical power. The station batteries supply the DC busses and the AC vital instrument busses. Since AC emergency power is not available to charge the station batteries, battery power supply must be conserved to permit monitoring and control of the plant until AC power can be restored.

The intent of load shedding is to remove all large non-essential loads as soon as practical, consistent with preventing damage to plant equipment. Prioritized shedding of additional loads is performed in case AC power cannot be restored within the projected life of the station batteries. CPSES analysis for Station Blackout has identified that even without load shedding, the heaviest loaded battery has sufficient capacity to not only carry its loads for a four (4) hour period, but also provide sufficient DC power for AC power restoration. DC voltage may be required to flash the diesel generator field or close safeguards bus supply breakers during the power restoration evolution.

Since the remaining battery life cannot be monitored from the control room, Step requires personnel to be dispatched to locally monitor the DC power supply. This is intended to provide the operator information on remaining battery life and the need to shed additional DC loads.

Comments / Reference: From ECA-0.0A, Attachment 2, Page 10 of 17	Revision # 8

CPSES EMERGENCY RESPONSE GUIDELINES	UNIT 1	PROCEDURE NO. ECA-0.0A
LOSS OF ALL AC POWER	REVISION NO. 8	PAGE 37 OF 86

ATTACHMENT 2
PAGE 10 OF 17

DC LOAD SHEDDING

NOTE: Shedding loads on 1ED2-1 will result in the loss of some Phase A valve indication and the following:

- Opening Breaker 10 will result in the loss of power to the solenoids required to close the MSIVs (Verifying air isolated to the MSIVs ensure valves remain closed).
- Opening Breaker 12 will result in the loss of power to the solenoids required to close the Feedwater Isolation Valves (Verifying FWIVs closed ensure valves remain closed), the loss of valve indication for TD AFWP SG 1 & 2 FLO CTRL VLVs, 1-ZL-2459A and 1-ZL-2460A AND will result in the failing open of AFWPT STM SPLY VLV-MSL 1, 1-HS-2452-2.

2) Perform the following to shed 1ED2-1 loads (ECB 807 Unit 1 CSR North Wall):

☐ A) Ensure FIVs are closed, or that the feedlines are isolated.

☐ B) Ensure instrument air has been isolated to the MSIVs.

C) Place the following 1ED2-1 Breakers in OFF:

☐ • 1ED2-1/10/BKR, TERMINATION RACK 1-TC-17 SUPPLY BREAKER

☐ • 1ED2-1/12/BKR, TERMINATION RACK 1-TC-20/27 SUPPLY BREAKER

☐ • 1ED2-1/17/BKR, TERMINATION RACK 1-TC-05/11 SUPPLY BREAKER

Examination Outline Cross-reference:	Level	RO	SRO
	Tier #		2
	Group #		2
	K/A #	015 A2.01	
	Importance Rating		3.9

Nuclear Instrumentation System: Ability to (a) predict the impacts of the following malfunctions or operations on the NIS; and (b) based on those predictions, use procedures to correct, control, or mitigate the consequences of those malfunctions or operations: Power supply loss or erratic operation

Proposed Question: SRO 91

Given the following conditions with Unit 1 operating at 100% power:

- The following annunciators are in alarm:
  - 1-ALB-6D-2.4, RX ≥ 50% PWR LOW PR DET FLUX DEV HI
  - 1-ALB-6D-3.4, PR CHAN DEV
  - 1-ALB-6D-4.10, QUADRANT PWR TILT
- Rod Control is in AUTOMATIC.
- No other alarms or automatic control actions occurred.
- ABN-703, Power Range Instrumentation Malfunction is in progress.

Which ONE (1) of the following describes the cause of the alarms and what action should be taken to mitigate the situation?

A. 1.) A Power Range NI Lower Detector has failed low.
   2.) Direct a power reduction to < 75% RTP due to QPTR being greater than Technical Specification limit.

B. 1.) A Power Range NI Lower Detector has failed high.
   2.) Perform the required channel bypasses that will allow the remaining channels to calculate QPTR.

C. 1.) A Power Range NI Lower Detector has failed low.
   2.) Verify QPTR within limits using the Core Power Distribution Measurement every 12 hours.

D. 1.) A Power Range NI Lower Detector has failed high.
   2.) Place Rod Control in MANUAL until the channel is restored.

Proposed Answer: C

Explanation:

A. Incorrect. Plausible because the detector did fail low. ABN-703 verifies if power is >75% and then instructs the operator to use the Movable Incore Detectors to verify QPTR.
B. Incorrect. Plausible because it is a lower detector failure. If power was < 75% the actions would be correct.
C. Correct. A failed high channel would have caused hi power and automatic rod motion. Power can remain at 100% as long as QPTR is verified using the Core Power Distribution Measurement every 12 hours.
D. Incorrect. Plausible because Rod Control would be placed in MANUAL, however, the detector has failed low.

Technical Reference(s): ABN-703, Section 2.2, 2nd Bullet; ABN-703, Section 2.1; ABN-703, Step 3; Tech Spec LCO 3.2.4, SR 3.2.4.2; OPT-302, Section 5.2 — Attached w/ Revision # See Comments / Reference

Proposed references to be provided during examination: None

Learning Objective: OP51.SYS.EC1.OB25 — **ANALYZE** the indications and **DESCRIBE** the mitigation strategy and major steps taken relative to the Excore Instrumentation system, both initial and subsequent, for:

- ABN-703, Power Range Instrumentation Malfunction

Question Source:
Bank # _____
Modified Bank # _____ (Note changes or attach parent)
New X

Question History: Last NRC Exam _____

Question Cognitive Level:
Memory or Fundamental Knowledge _____
Comprehension or Analysis X

10 CFR Part 55 Content:
55.41 _____
55.43 2, 5

Comments / Reference: From ABN-703, Section 2.2, 2nd Bullet	Revision # 8

CPSES ABNORMAL CONDITIONS PROCEDURES MANUAL	UNIT 1 AND 2	PROCEDURE NO ABN-703
POWER RANGE INSTRUMENTATION MALFUNCTION	REVISION NO. 8	PAGE 4 OF 23

2.1 b.
- Upscale, downscale, or erratic indication of the PERCENT FULL POWER or the upper or lower MICROAMPERES DETECTOR CURRENT meters on the nuclear instrumentation cabinet drawers for the failed channel.
- Lighting of the POSITIVE RATE TRIP lights on the nuclear instrumentation cabinet drawer for the failed channel, if the failure caused a rate of change of greater than or equal to 5% within 2 seconds.
- Lighting of the CHANNEL DEVIATION light on the comparator and rate drawer.

2.2 Automatic Actions

NOTE: The power range channels are designed with coincidence requirements for operational reliability. For that reason, an individual channel failure will cause an annunciator alarm and the OP HI FLUX ROD STOP C-2 with 1/4 channels at 103% of full power. No other safety system actuations will occur due to coincidence requirements.

- IF a power range channel fails HIGH while the rod control system is in automatic, THEN control rods will be rapidly inserted.
- A power range channel failure LOW will cause no control response.

NOTE: When one average temperature channel is defeated, an operable channel is added to the circuit to maintain the averaging. When channel 4 is defeated, channel 3 is substituted; when channel 3 is defeated, channel 2 is substituted; when channel 2 is defeated, channel 1 is substituted; and when channel 1 is defeated, channel 4 is substituted. Rod control should remain in MANUAL until all channels are operable (SE 97-0065, Rev. 1). This does not preclude placing rods in AUTO during rapidly changing transient conditions such as runbacks, etc. as long as rod control is returned to MANUAL when the plant is stabilized.

Comments / Reference: From ABN-703, Section 2.1	Revision # 8

CPSES ABNORMAL CONDITIONS PROCEDURES MANUAL	UNIT 1 AND 2	PROCEDURE NO. ABN-703
POWER RANGE INSTRUMENTATION MALFUNCTION	REVISION NO. 8	PAGE 3 OF 23

2.0 POWER RANGE INSTRUMENTATION MALFUNCTION

2.1 Symptoms

a. Annunciator Alarms

- 1 OF 4 OT N-16 HI (5C-2.5)
- 1 OF 4 HI SETPT PR FLUX HI (6D-1.3)
- 1 OF 4 LO SETPT PR FLUX HI (6D-2.3)
- 1 OF 4 PR FLUX RATE HI (6D-3.3)
- PR HI VOLT FAIL (6D-4.3)
- RX ≥50% PWR UP PR DET FLUX DEV HI (6D-1.4)
- RX ≥50% PWR LOW PR DET FLUX DEV HI (6D-2.4)
- PR CHAN DEV (6D-3.4)
- QUADRANT PWR TILT (6D-4.10)
- OP HI FLUX ROD STOP C-2 (6D-2.14)
- 1 OF 4 OT N-16 ROD STOP & TURB RUNBACK (6D-3.14)

b. Plant Indications

- Loss of the INSTRUMENT POWER ON or CONTROL POWER ON lights on the nuclear instrumentation cabinet drawers for the failed channel.
- Lighting of the LOSS OF DETECTOR VOLT, OVERPOWER TRIP HIGH RANGE, OVERPOWER ROD STOP, lights on the nuclear instrumentation cabinet drawer for the failed channel.
- The OVERPOWER TRIP LOW RANGE, POWER ABOVE PERMISSIVE P10, POWER ABOVE PERMISSIVE P8 or POWER ABOVE PERMISSIVE P9 lights on the nuclear instrumentation cabinet drawer for the failed channel not in the proper status (ON or OFF) for the current plant status.
- Lighting of the UPPER SECTION DEVIATION or LOWER SECTION DEVIATION lights on the Detector Current Comparator drawer if an upper or lower detector fails and produces an indicated deviation of greater than 5%.

Comments / Reference: From ABN-703, Step 3	Revision # 8

CPSES ABNORMAL CONDITIONS PROCEDURES MANUAL	UNIT 1 AND 2	PROCEDURE NO. ABN-703
POWER RANGE INSTRUMENTATION MALFUNCTION	REVISION NO. 8	PAGE 5 OF 23

2.3 Operator Actions

ACTION/EXPECTED RESPONSE	RESPONSE NOT OBTAINED
☐ 1 Verify rapid control rod insertion - NOT REQUIRED ● Reactor and Turbine Power - MATCHED -AND- ● Tave less than 3°F above Tref.	Perform the following: a. Monitor rod motion AND Tave. b. Ensure Tave restored to programmed temperature. c. Investigate cause of system upset. d. IF NO instrument failure/malfunction is indicated, THEN return to procedure and step in effect.

NOTE:
- If failure high, Power-Range overpower rod stop may prevent rod motion until reset by step 4a.
- Rod Control should remain in MANUAL until all channels are operable.This does not preclude placing rods in AUTO during rapidly changing transient conditions such as runbacks, etc. as long as rod control is returned to MANUAL when the plant is stabilized.

☐ 2 Select MANUAL AND restore Tave to within 1°F of Tref	IF rods will NOT step, THEN adjust Tave using the following, as applicable: ● Turbine load ● Steam dumps/ARVs ● Boration/dilution ● WHEN rod motion restored, THEN rod control.
☐ 3 Verify Reactor Power LESS THAN 75% rated thermal power (RTP).	Initiate actions to comply with Technical Specification SR 3.2.4.2.

Comments / Reference: From Technical Specification LCO 3.2.4, SR 3.2.4.2	Amendment # 144

SURVEILLANCE REQUIREMENTS

	SURVEILLANCE	FREQUENCY
SR 3.2.4.1	----------NOTES---------- 1. With input from one Power Range Neutron Flux channel inoperable and THERMAL POWER ≤ 75% RTP, the remaining three power range channels can be used for calculating QPTR. 2. SR 3.2.4.2 may be performed in lieu of this Surveillance. ---------- Verify QPTR is within limit by calculation.	7 days
SR 3.2.4.2	----------NOTE---------- Not required to be performed until 12 hours after input from one or more Power Range Neutron Flux channels are inoperable with THERMAL POWER > 75% RTP. ---------- Verify QPTR is within limit using the core power distribution measurement information.	12 hours

Comments / Reference: From OPT-302, Section 5.2	Revision # 9

CPSES OPERATIONS TESTING MANUAL	UNIT 1 AND 2	PROCEDURE NO. OPT-302
CALCULATING POWER TILT RATIO	REVISION NO. 9	PAGE 3 OF 6

5.0 PRECAUTIONS, LIMITATIONS AND NOTES

5.1 Precautions

None

5.2 Limitations

5.2.1 This procedure is performed when the reactor is operating in MODE 1 with THERMAL POWER > 50% of RTP:

- At least once per 7 days with the QUADRANT PWR TILT alarm (u-ALB-6D, 4.10) OPERABLE (SR 3.2.4.1),

OR

- At least once per 12 hours with the QUADRANT PWR TILT alarm inoperable. (TRS 13.2.33.1).

5.2.2 With input from one Power Range Neutron Flux channel inoperable AND THERMAL POWER ≤ 75% RTP, the remaining three power range channels can be used for calculating QPTR in accordance with this procedure.

[C] 5.2.3 With input from one or more Power Range Neutron Flux channels inoperable AND THERMAL POWER > 75% RTP, QPTR is verified within limit using the movable incore detectors per NUC-208 (SR 3.2.4.2). SR 3.2.4.2 is not required until 12 hours after the inputs from one or more Power Range Neutron Flux channels are inoperable with THERMAL POWER > 75% RTP.

[C] 5.2.4 IF measured QPTR exceeds 1.02, THEN the Shift Manager shall be promptly notified of the condition AND the ACTIONS of Technical Specification LCO 3.2.4 initiated. Core Performance Engineering shall also be informed if the limits are exceeded.

5.3 Notes

5.3.1 Calculations and forms provided by a validated computer program may be substituted for the calculations performed in this procedure.

5.3.2 This procedure is common to both units. The specific unit designator (1 or 2) is represented within these instructions by the symbol "u". The appropriate unit digit may be substituted for this symbol to obtain the unit specific equipment number. (Example u-ALB-6D represents 1-ALB-6D for Unit 1 and 2-ALB-6D for Unit 2.)

Examination Outline Cross-reference:

Level	RO	SRO
Tier #		2
Group #		2
K/A #	071 G 2.4.46	
Importance Rating		4.2

Waste Gas Disposal System: Emergency Procedures/Plan: Ability to verify that the alarms are consistent with the plant conditions

Proposed Question: SRO 92

Given the following conditions:

- Waste Gas System Decay Tank #1 release is in progress.
- The following alarms are received simultaneously:
  - PC-11 HIGH alarm for X-RE-5701 AUX BLDG VENT DUCT (ABV089).
  - 1-ALB-6B-3.7, GWPS PNL TRBL.
- The Radwaste Operator reports the following alarm on the Gaseous Waste Panel:
  - ALM-0401-1.8, AUX BLDG VENT EXHAUST MONITOR HIGH RAD.

Which ONE (1) of the following is the most likely cause and what action is required?

A. Release permit setpoints for Waste Gas System Decay Tank #1 have been exceeded.
Enter ABN-902, Accidental Release of Radioactive Gas and direct the Rad Waste Operator to ensure X-HCV-0014, Waste Gas Discharge Control Valve is closed.

B. The in-service Waste Gas Decay Tank Relief Valve is lifting.
Enter RWS-201, Gaseous Waste Processing System and isolate the in-service Waste Gas Decay Tank.

C. The in-service Waste Gas Decay Tank Relief Valve is lifting.
Enter ABN-902, Accidental Release of Radioactive Gas and ensure Emergency Recirculation Initiation has occurred.

D. Release permit setpoints for Waste Gas System Decay Tank #1 have been exceeded.
Enter RWS-201, Gaseous Waste Processing System and isolate Waste Gas System Decay Tank #1.

Proposed Answer: A

Explanation:

A. Correct. Given the conditions listed, these are the correct actions and procedure entry required.
B. Incorrect. Plausible because the Waste Gas Decay Tank Relief Valve could be lifting, however, this discharge is directed to the Waste Gas Holdup Tank and annunciator ALM-0401-1.8 would not be an alarm.
C. Incorrect. Plausible because the procedure entry is correct and the Waste Gas Decay Tank Relief Valve could be lifting, however, this action would not be required for the conditions listed.
D. Incorrect. Plausible because release setpoints have been exceeded, however, ABN entry is required prior to performing actions to isolate the Waste Gas System Decay Tank.

Technical Reference(s): ALM-0062A, 1-ALB-6B-3.7; ABN-902, Step 2.3.1.b; ALM-0401, 1.8 — Attached w/ Revision # See Comments / Reference

Proposed references to be provided during examination: None

Learning Objective: OP51.SYS.GH1.OB12 — **DESCRIBE** how the Gaseous Waste Processing System Main Control Board/Plant Computer controls, alarms and indications are used to predict, monitor and control changes in the system.

OP51.SYS.GH1.OB03 — **DRAW, LABEL** and **EXPLAIN** a one-line diagram of the Gaseous Waste Processing System to include the major components listed in Objective 2 and the following connections:

- Plant Ventilation

Question Source:
Bank # _____
Modified Bank # _____ (Note changes or attach parent)
New X

Question History: Last NRC Exam _____

Question Cognitive Level:
Memory or Fundamental Knowledge _____
Comprehension or Analysis X

10 CFR Part 55 Content:
55.41 _____
55.43 4, 5

Comments / Reference: From ALM-0062A, 1-ALB-6B-3.7	Revision # 6

CPSES ALARM PROCEDURES MANUAL	UNIT 1	PROCEDURE NO. ALM-0062A
ALARM PROCEDURE 1-ALB-6B	REVISION NO.6	PAGE 52 OF 70

ANNUNCIATOR NOM./NO.: **GWPS PNL TRBL** 3.7

PROBABLE CAUSE:

Any alarm on the gaseous waste panel

AUTOMATIC ACTIONS: None

NOTE: Several automatic actions may be initiated at the individual local alarm setpoints. The operator responding to the local panel alarm will initiate appropriate response to these conditions.

OPERATOR ACTIONS:

1. Coordinate with Unit 2 and dispatch a Radwaste operator to the Gaseous Waste Panel to determine and correct cause of alarm condition per ALM-0401.
   A. If a high radiation alarm occurs on X-RE-5250 (WSG083) WASTE GAS, place a standby gas decay tank in service per RWS-201.

2. Correct the condition or initiate a work request per STA-606.

Comments / Reference: From ALM-0401, 1.8	Revision # 4

CPSES ALARM PROCEDURES MANUAL	COMMON	PROCEDURE NO. ALM-0401
ALARM PROCEDURE GASEOUS WASTE PANEL	REVISION NO. 4	PAGE 21 OF 65

ANNUNCIATOR NOM./NO.: **AUX BLDG VENT EXHAUST MONITOR HIGH RAD** 1.8

PROBABLE CAUSE:

Excessive flow rate during release
X-RE-5701 Operating Failure

AUTOMATIC ACTIONS:

X-HCV-0014, GWPS DISCH TO PLT EXH PLNM ISOL VLV closes (WHITE TRIP LIGHT ENERGIZED)

OPERATOR ACTIONS:

1. If GWPS discharge is in progress, perform the following:
   A. Ensure X-HS-0014, WASTE GAS DISCH CONTROL VALVE is CLOSED.
   B. Close XGH-7898-RO, GWPS H2/N2 TO PLT VENT EXH PLNM SPLY DNSTRM ISOL VLV.
   C. Notify the Radwaste Supervisor, the Control Room and Radiation Protection of a possible Discharge Permit violation and refer to ABN-902.
   D. Secure the discharge per RWS-201.

2. If a GWPS discharge is NOT in progress, notify the Radwaste Supervisor, the Control Room and perform the following:

   - Ensure X-HS-0014, WASTE GAS DISCH CONTROL VALVE is closed.
   - Ensure XGH-7898-RO, H2/N2 TO PLT VENT EXH PLNM SPLY DNSTRM ISOL VLV is closed.

3. Correct the condition or initiate a work request per STA-606.

Comments / Reference: From ABN-902, Step 2.3.1.b	Revision # 6

CPSES ABNORMAL CONDITIONS PROCEDURES MANUAL	UNIT COMMON	PROCEDURE NO. ABN-902
RELEASE OF RADIOACTIVE/TOXIC GAS	REVISION NO. 6	PAGE 5 OF 18

2.3 Operator Actions

ACTION/EXPECTED RESPONSE	RESPONSE NOT OBTAINED

NOTE: Unit 1 typically handles response for common alarms (e.g. vent stack). However, Unit 2 should be informed to check the ABN to ensure applicable steps addressed for that unit.

1 Verify applicable Automatic Action has occurred with related alarm:

☐ a. Verify Containment air radiation alarms - CLEAR:

- CAPu98 (u-RE-5502), CNTMT AIR PIG PART
- CAGu97 (u-RE-5503), CNTMT AIR PIG GAS

a. Manually ensure Containment Ventilation Isolation per Attachment 1.

☐ b. Verify the following radiation alarms - CLEAR:

- PVF684 (X-RE-5570A), S. WRGM EFFLUENT
- PVF685 (X-RE-5570B), N. WRGM EFFLUENT
- ABV089 (X-RE-5701), AUX BLDG VENT DUCT

b. AT X-GP-01, GWPS WASTE GAS PROCESS CONTROL PANEL (AB 862 Rm X-243) ensure X-HS-0014, WASTE GAS DISCHARGE CONTROL VALVE - CLOSED.

☐ c. Verify the following radiation alarms - CLEAR:

- CRV053 (X-RE-5895A), CR HVAC, N VENT
- CRV054 (X-RE-5895B), CR HVAC, N VENT
- CRV091 (X-RE-5896A), CR HVAC, S VENT INTK
- CRV092 (X-RE-5896B), CR HVAC, S VENT

c. Perform the following:

[C] 1) Ensure Emergency Recirculation Automatic Initiation has occurred (X-ZL-5877A/B, CR EMER RECIRC).

OR

Manually initiate Emergency Recirculation per SOP-802.

2) Ensure the Emergency Filtration and Pressurization Unit fans shifted to single train operation per SOP-802.

Examination Outline Cross-reference:

Level	RO	SRO
Tier #		2
Group #		2
K/A #	035 A2.01	
Importance Rating		4.6

Steam Generator System: Ability to (a) predict the impacts of the following malfunctions or operations on the SG; and (b) based on those predictions, use procedures to correct, control, or mitigate the consequences of those malfunctions or operations: Faulted or ruptured SGs

Proposed Question: SRO 93

Given the following conditions on Unit 2:

- A large steam break has occurred inside Containment.
  - During the performance of EOP-0.0B, Reactor Trip or Safety Injection, Containment pressure rose to 19 psig.
  - Proper operation of Containment Spray System was verified.
- EOP-0.0B, Attachment 2, Safety Injection Actuation Alignment has been completed.
- A transition has just been made to EOP-2.0B, Faulted Steam Generator Isolation.
- Containment pressure is now 22 psig.

Which ONE (1) of the following identifies the status of the Containment Critical Safety Function and what action should be taken to mitigate the situation?

A. 1.) Critical Safety Function CONTAINMENT Status Tree is ORANGE.
   2.) Continue to monitor Containment pressure and transition to FRZ-0.1B, Response to High Containment Pressure if it exceeds 50 psig.

B. 1.) Critical Safety Function CONTAINMENT Status Tree is RED.
   2.) Continue to monitor Containment pressure and transition to FRZ-0.1B, Response to High Containment Pressure if it remains above 18 psig for more than 1 hour.

C. 1.) Critical Safety Function CONTAINMENT Status Tree is RED.
   2.) Transition to FRZ-0.1B, Response to High Containment Pressure to allow verification of proper operation of the Containment Phase B Isolation valves.

D. 1.) Critical Safety Function CONTAINMENT Status Tree is ORANGE.
   2.) Transition to FRZ-0.1B, Response to High Containment Pressure and then transition back to EOP-2.0B, Faulted Steam Generator Isolation.

Proposed Answer: D

Explanation:

A. Incorrect. Plausible because the Containment CSFST is ORANGE and a transition would be required if pressure exceeded 50 psig, however, a transition condition already exists.
B. Incorrect. Plausible because a transition is required, however, the transition condition already exists and should be performed as soon as recognized.
C. Incorrect. Plausible because a transition is required, however, the first step of FRZ-0.1B directs the crew back to EOP-2.0B.
D. Correct. ERG Rules of Usage required that any entry be made into FRZ-0.1B. The first step in FRZ-0.1B will direct the crew back to EOP-2.0B. The Containment CSFST is ORANGE.

Technical Reference(s) FRZ-0.1B, Containment CSFST
FRZ-0.1B, Step 1
Attached w/ Revision # See Comments / Reference

Proposed references to be provided during examination: None

Learning Objective:
OPD1.FRZ.XH5.OB602 Given specified Containment environmental parameters and conditions, **ANALYZE** indications to determine the nature and cause of a challenge to the Containment Integrity Critical Safety Function.

OPD1.FRZ.XH5.OB604 Given specified Containment environmental conditions, **EVALUATE** and **DIRECT** operator actions to respond to hazards to plant personnel and public safety associated with challenges to the Containment Integrity Critical Safety Function.

Question Source:
Bank # ERG.XD2.OB16-4
Modified Bank # _____ (Note changes or attach parent)
New _____

Question History: Last NRC Exam _____

Question Cognitive Level:
Memory or Fundamental Knowledge _____
Comprehension or Analysis X

10 CFR Part 55 Content:
55.41 _____
55.43 5

Comments / Reference: From FRZ-0.1B, Containment CSFST	Revision # 8

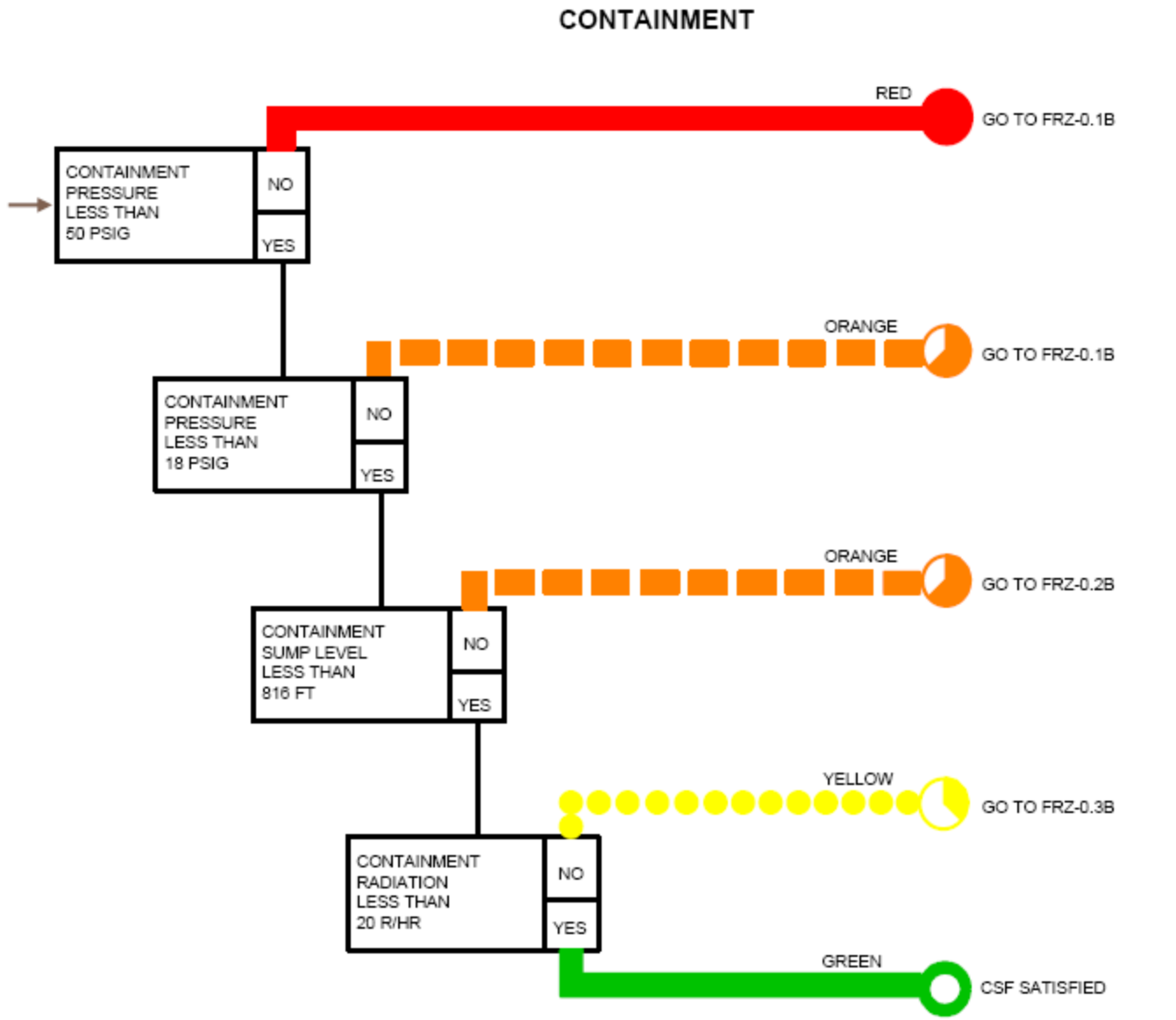

Comments / Reference: From FRZ-0.1B, Step 1	Revision # 8

CPSES EMERGENCY RESPONSE GUIDELINES	UNIT 2	PROCEDURE NO. FRZ-0.1B
RESPONSE TO HIGH CONTAINMENT PRESSURE	REVISION NO. 8	PAGE 3 OF 25

STEP	ACTION/EXPECTED RESPONSE	RESPONSE NOT OBTAINED
1	Check Containment Pressure - GREATER THAN 50 PSIG	IF proper Containment Spray alignment has been verified in EOP-0.0B, REACTOR TRIP OR SAFETY INJECTION, THEN return to procedure and step in effect.
2	Verify Containment Isolation Phase A - APPROPRIATE MLB LIGHT INDICATION	IF flow path NOT necessary, THEN close valve(s) by performing the following: • Manually actuate Phase A and verify Phase A valves close. -OR- • Manually close Phase A valve(s) as necessary. (Refer to Attachment 2)
3	Verify Containment Ventilation Isolation - APPROPRIATE MLB LIGHT INDICATION	Manually actuate containment ventilation isolation. IF dampers not closed, THEN manually close dampers as necessary. (Refer to Attachment 3)

Examination Outline Cross-reference:

Level	RO	SRO
Tier #		3
Group #		1
K/A #	G 2.1.6	
Importance Rating		4.8

Conduct of Operations: Ability to manage the control room crew during plant transients

Proposed Question: SRO 94

Given the following conditions:

- Unit 1 has experienced a Main Steam Line break inside Containment and is currently implementing EOP-1.0A, Loss of Reactor or Secondary Coolant.
- ORANGE path conditions are reached for the Containment Safety Function.

Which ONE (1) of the following describes the requirements for implementing FRZ-0.1A, Response to High Containment Pressure?

A. Entry into FRZ-0.1A, Response to High Containment Pressure is required. Direct another qualified operator to perform the actions of FRZ-0.1A, Response to High Containment Pressure while continuing in EOP-1.0A, Loss of Reactor or Secondary Coolant. Verify all Functional Recovery Actions that were completed.

B. Entry into FRZ-0.1A, Response to High Containment Pressure is required. Direct another qualified operator to continue the actions of EOP-1.0A, Loss of Reactor or Secondary Coolant of Reactor while you perform the actions for FRZ-0.1A, Response to High Containment Pressure. Verify all Optimal Recovery Actions that were completed.

C. Entry into FRZ-0.1A, Response to High Containment Pressure is not required. Actions to ensure Containment Spray are Continuous Action Steps from EOP-0.0A, Reactor Trip or Safety Injection.

D. Entry into FRZ-0.1A, Response to High Containment Pressure is not required. Actions to ensure Containment Integrity were verified in EOP-0.0A, Reactor Trip or Safety Injection.

Proposed Answer: B

Explanation:

A. Incorrect. Plausible because delegation is allowed but not the ERG specified path.
B. Correct. The SRO must perform actions that are specified by the ERG. If parallel paths are desired they may be delegated on a not to interfere basis. FRG ORANGE paths must be addressed
C. Incorrect. Plausible because they are continuous action steps in EOP-0.0A but ORANGE challenges must be addressed.
D. Incorrect. Plausible because it would still address the ORANGE path it would not be timely.

Technical Reference(s) ODA-407, Attachment 8.A Attached w/ Revision # See Comments / Reference

Proposed references to be provided during examination: None

Learning Objective: OPD1.EO0.XG2.OB21 Following a Reactor Trip and Safety Injection, **DISCUSS** and **APPLY** the "RULES OF USAGE" for Emergency Response Guidelines and Critical Safety Function Status Trees in accordance with ODA-407.

OPD1.EO0.XG2.OB14 Given specific plant and/or monitoring equipment conditions, **DESCRIBE** the Senior Reactor Operator's responsibilities in accordance with CPSES Administrative Guidelines. Discussion should include:

- Selection of procedures and mitigation strategies based on system conditions, system parameters, and/or alarms.

Question Source:
Bank # _____
Modified Bank # _____ (Note changes or attach parent)
New X

Question History: Last NRC Exam _____

Question Cognitive Level:
Memory or Fundamental Knowledge _____
Comprehension or Analysis X

10 CFR Part 55 Content:
55.41 _____
55.43 5

Comments / Reference: From ODA-407, Attachment 8.A	Revision # 12

CPSES OPERATIONS DEPARTMENT ADMINISTRATION MANUAL		PROCEDURE NO. ODA-407
GUIDELINE ON USE OF PROCEDURES	REVISION NO. 12	PAGE 18 OF 41

ATTACHMENT 8.A
PAGE 5 OF 19
ERG RULES OF USAGE

10. The CSFST evaluation determines the condition of Critical Safety Functions. The following Rules of Priority describe the appropriate operator action based on the CSFST conditions.

- IF a RED status is encountered, THEN the operator is required to immediately stop (do not complete the step in progress) any Optimal Recovery Guideline (ORG) in progress AND perform the required Functional Restoration Guideline (FRG).

- IF during performance of a RED condition FRG, a RED status of higher priority arises, THEN the higher priority condition should be addressed first AND the lower priority RED condition FRG suspended (complete the step in progress). After the higher priority FRG is completed and guidance is given to "return to procedure and step in effect", the previous FRG which was being performed prior to the transition should be re-entered (performed). Performance (re-entry) to the previous FRG being performed is required even if the lower priority condition has cleared in order to complete response and recovery actions that previously been started.

- IF any ORANGE status is encountered, the operator is expected to monitor all of the remaining CSFSTs, THEN if no RED status is encountered, suspend any ORG in progress (complete the step in progress) AND perform the FRG required by the ORANGE status.

- IF during performance of an ORANGE condition FRG, a RED status or higher priority ORANGE status arises, THEN the RED or higher priority ORANGE condition is to be addressed first AND the original ORANGE condition FRG suspended (complete the step in progress). IF a FRG specifically states that a higher priority condition should NOT be addressed, this requirement does not apply. After the higher priority FRG is completed and guidance is given to "return to procedure and step in effect", the previous FRG which was being performed prior to the transition should be re-entered (performed). Performance (re-entry) to the previous FRG being performed is required even if the lower priority condition has cleared in order to complete response and recovery actions that previously been started.

- Once a FRG is entered due to a RED or ORANGE condition, that FRG is performed to the point of a defined transition regardless of whether the RED or ORANGE has cleared.

- If an FRG is in progress due to an ORANGE priority condition and then the CSFST status for that procedure goes to a RED priority condition, the operating crew should continue in the procedure from the current step. The procedure actions are the same regardless of color status (e.g., RED or ORANGE priority for FRS-0.1A/B, FRP-0.1A/B, FRZ-0.1A/B based on Containment pressure); therefore, recovery actions should proceed from the current step through completion to the point of a defined transition.

- YELLOW FRG status implementation is based on operator judgement when it is determined that adequate time exists to implement the procedure. The operator does not have to implement a YELLOW condition FRG if a judgement has been made that it is inappropriate based on available time or current plant status; and, if an event of higher priority is in progress, the operator should attend to the more important matters prior to implementing a YELLOW condition FRG. In the prioritization scheme of the ERGs, the ORGs (including applicable foldout pages) have priority over YELLOW path FRG(s). While performing actions of a YELLOW condition, continuous actions or foldout page items of the ORG in effect are still applicable and should be monitored and implemented by the operator. In some cases the YELLOW status might provide an early indication of a developing RED or ORANGE condition.

10. ● In general, performance of the FRGs is dependent on current plant parameters. If a RED or ORANGE priority condition comes in and clears before FRG implementation is initiated, the FRG need not be performed. If conditions degrade, the safety function status will become a continuous RED or ORANGE condition; at which time, the operator will be directed to the appropriate FRG.

An exception to this rule is made for implementing FRZ-0.1A/B after transition out of EOP-0.0A/B. The corresponding containment pressure for an ORANGE priority condition of FRZ-0.1A/B is also the Containment Spray initiation setpoint; thus, the containment pressure value impacts FRG status and implementation. The following provides a summary of requirements for FRZ-0.1A/B.

Scenarios Affecting FRZ-0.1A/B Status	Requirements for Implementing FRZ-0.1A/B
Containment Spray initiates during EOP-0.0A/B performance as Containment Pressure reaches 18 psig (FRZ-0.1A/B ORANGE priority condition exists). Step 7 of EOP-0.0A/B is performed to verify proper Containment Spray alignment. The FRZ ORANGE condition HAS CLEARED when FRG implementation is initiated.	IF FRZ ORANGE condition has CLEARED when FRG implementation is initiated (transition out of EOP-0.0A/B OR EOP-0.0A/B step initiates CSF monitoring AND automatic action verification complete), THEN performance of FRZ-0.1A/B is NOT required. Proper response for Containment Spray actuation has been verified with EOP-0.0A/B actions AND there is NOT currently a challenge to the Containment barrier.
Containment Spray initiates during EOP-0.0A/B performance as Containment Pressure reaches 18 psig (FRZ-0.1A/B ORANGE priority condition exists). Step 7 of EOP-0.0A/B is performed to verify proper Containment Spray alignment. The FRZ ORANGE condition STILL EXISTS when FRG implementation is initiated.	IF an FRZ ORANGE condition exists when FRG implementation is initiated (transition out of EOP-0.0A/B OR EOP-0.0A/B step initiates CSF monitoring AND automatic action verification complete), THEN FRZ-0.1A/B performance is required. Proper response for Containment Spray actuation has been verified with EOP-0.0A/B actions BUT a challenge to the Containment barrier may exist.
EOP-0.0A/B is performed without Containment Spray actuation (Step 7 of EOP-0.0A/B identifies Containment Spray NOT required/NOT verified). The appropriate recovery actions are initiated with transition out of EOP-0.0A/B. The FRZ ORANGE condition COMES IN AND remains in during implementation of recovery actions (after FRG implementation initiated).	All CSFSTs are monitored and FRGs are implemented per the rules of usage. FRG implementation is initiated based on the highest CSF priority. IF an FRZ ORANGE condition exists, THEN FRZ-0.1A/B performance is required. A challenge to the Containment barrier exists AND proper response for Containment Spray actuation is verified to minimize challenges to the Containment barrier.
EOP-0.0A/B is performed without Containment Spray actuation (Step 7 of EOP-0.0A/B identifies Containment Spray NOT required/NOT verified). The appropriate recovery actions are initiated with transition out of EOP-0.0A/B. The FRZ ORANGE condition COMES IN after FRG implementation has been initiated, THEN clears prior to entering FRZ-0.1A/B.	All CSFSTs are monitored and FRGs are implemented per the rules of usage. FRG implementation is initiated based on the highest CSF priority. IF an FRZ ORANGE condition has previously existed AND FRZ-0.1A/B has NOT been performed, THEN FRZ-0.1A/B performance is required. Proper response for Containment Spray actuation is verified to ensure challenges to the Containment barrier have been addressed.

Examination Outline Cross-reference:

Level	RO	SRO
Tier #		3
Group #		1
K/A #	G 2.1.34	
Importance Rating		3.5

Conduct of Operations: Knowledge of primary and secondary plant chemistry limits

Proposed Question: SRO 95

Given the following conditions:

- Unit 2 has been at 100% power for 2 hours.
- Chemistry has just reported the following Reactor Coolant System samples:
  - Chloride concentration is 2000 ppb.
  - Fluoride concentration is 1900 ppb.

Which ONE (1) of the following actions should the Unit Supervisor take per the Technical Requirements Manual and why?

Within six (6) hours, place the Unit in...

A. MODE 2 because only the chloride concentration has exceeded the transient limit.

B. MODE 3 because the chloride and fluoride concentrations have exceeded the transient limit.

C. MODE 2 because the chloride and fluoride concentrations have exceeded the steady-state limit.

D. MODE 3 because only the fluoride concentration has exceeded the steady-state limit.

Proposed Answer: B

Explanation:

A. Incorrect. Plausible because the fluoride concentration has exceeded the transient limits, however, the Unit must be placed in MODE 3 within six hours.
B. Correct. Unit must be placed in MODE 3 within 6 hours and be in MODE 5 within 36 hours because the fluoride concentration has exceeded the transient limit.
C. Incorrect. Plausible because the steady-state fluoride limit has been exceeded, however, the TRM allows up to 24 hours to restore the parameter to within specification. Additionally, the Unit must be in MODE 3 within six hours.
D. Incorrect. Plausible because the steady-state fluoride limit has been exceeded, however, the TRM allows up to 24 hours to restore the parameter to within specification.

Technical Reference(s) TRM Table 13.4.33-1
STA-609, Attachment 8.A
Technical Requirement TR 13.4.33

Attached w/ Revision # See Comments / Reference

Proposed references to be provided during examination: None

Learning Objective: OP51.SYS.RC1.OB18

LIST and **DESCRIBE** the following Technical Specifications (i.e., LCOs, action statements and conditional surveillance requirement of one hour and less, if applicable) for the Reactor Coolant System:

- TR 13.4.33, RCS Chemistry

Question Source: Bank # _____
Modified Bank # SYS.RC1.OB18-16 (Note changes or attach parent)
New _____

Question History: Last NRC Exam _____

Question Cognitive Level: Memory or Fundamental Knowledge _____
Comprehension or Analysis X

10 CFR Part 55 Content: 55.41 _____
55.43 1, 5

Comments / Reference: From TRM Table 13.4.33-1 | Revision # 56

Table 13.4.33-1
Reactor Coolant System Chemistry Limits

PARAMETER	STEADY-STATE LIMIT	TRANSIENT LIMIT
Dissolved Oxygen (a)	≤ 0.10 ppm	≤ 1.00 ppm
Chloride (b)	≤ 0.15 ppm	≤ 1.50 ppm
Fluoride (b)	≤ 0.15 ppm	≤ 1.50 ppm

(a) Limit not applicable with T_{avg} less than or equal to 250 °F.

(b) Limit not applicable when Reactor Coolant System is defueled.

Comments / Reference: From STA-609, Attachment 8.A	Revision # 10

CPSES STATION ADMINISTRATION MANUAL		PROCEDURE NO. STA-609
REACTOR COOLANT WATER CHEMISTRY CONTROL PROGRAM	REVISION NO. 10	PAGE 16 OF 42

ATTACHMENT 8.A
PAGE 1 OF 2

REACTOR COOLANT SYSTEM POWER OPERATION (REACTOR CRITICAL)

REACTOR COOLANT SYSTEM POWER OPERATION (REACTOR CRITICAL) MODES 1 AND 2							
Control Parameter	Normal Frequency	Optimized Value	Action Level 1	Action Level 2	Action Level 3	Technical Specification/ Technical Requirements (Steady State Limit*)	Technical Requirements (Transient Limit**)
Chloride (ppb)	1/72 Hours(1)	<10	>50	>150	>1500	≤150*(TRM)	≤1500**
Fluoride (ppb)	1/72 Hours(1)	<10	>50	>150	>1500	≤150*(TRM)	≤1500**
Sulfate (ppb)	Weekly (9)	<10	>50	>150	>1500	-	-
Dissolved Hydrogen (cc/kg H2O @ STP)	3/Week (2)	25-50 (5)	<25 or >50	< 15 (8)	<5	-	-
Lithium (ppm)	3/W (3)	(3)	(4)	-	-	-	-
Dissolved Oxygen (ppb)	1/72 Hours(1)	≤5	>5	-	>100	≤100*(TRM)	≤1000**
DEXe (µCi/g)	1/7 days (11)	-	-	-	-	≤500(TS)	-
DEI (µCi/g) (7)	1/14 days (6)	<0.01	-	-	-	≤0.45(TS) (10)	-

Notes:

1 The limit is applicable at all times. TRS 13.4.33.1.

2 Increase sampling frequency to daily during operations that may significantly impact hydrogen concentration (i.e. feed and bleed, purging of Pressurizer Steam Space, purging of VCT Gas Space, etc).

3 CHM-120, "Primary Chemistry" defines the Lithium-7 Control Program.

4 Initiate action when lithium concentration does not meet the specification of Lithium-7 Control Program

5 When the Reactor is critical. For shutdown and cooldown it is recommended to maintain Hydrogen in the high end of the operating band, > 40 cc/kg, to support Nickel-Ferrite decomposition when RCS temperature > 300 ° F., IF required, RCS Hydrogen may be reduced to ≥15 cc/kg within 24 hours of shutdown and not enter Action Level criteria.

6 Technical Specification 3.4.16.2, perform in Mode 1, applicable Modes 1, 2, 3, and 4.

7 DEI is not a Control Parameter per NEI 97-06.

8 Plant shutdown requirement is not applicable to Dissolved Hydrogen Action Level 2.

9 Increase sampling frequency to daily if evidence of resin ingress is noted (e.g. increasing sulfate concentrations or high filter dp)

10 If this value is changed, contact the Chemistry Department NRC Performance Indicator Reporter.

11 Technical Specification 3.4.16.1, perform in Mode 1, applicable Modes 1, 2, 3, and 4.

Comments / Reference: From Technical Requirement TR 13.4.33	Revision # 56

13.4 REACTOR COOLANT SYSTEM

TR 13.4.33 Reactor Coolant System (RCS) Chemistry

TR LCO 13.4.33 The Reactor Coolant System chemistry shall be maintained within the limits specified in Table 13.4.33-1.

APPLICABILITY: At all times.

ACTIONS

CONDITION	REQUIRED ACTION	COMPLETION TIME
- NOTE - Only applicable in MODES 1, 2, 3 and 4.		
A. One or more chemistry parameters in excess of its Steady-State Limit but within its Transient Limit.	A.1 Restore parameter to within Steady-State limit.	24 hours
- NOTE - Only applicable in MODES 1, 2, 3 and 4.		
B. Required Action and associated Completion Time of Condition A not met. OR One or more chemistry parameters in excess of its Transient Limit.	B.1 Be in MODE 3. AND B.2 Be in MODE 5.	6 hours 36 hours

(continued)

Comments / Reference: Exam Bank Question SYS.RC1.OB18-16	Revision # N/A

Given the following conditions:

- Unit 2 has been at 100% power for 2 hours.
- Chemistry has just reported a Reactor Coolant System fluoride sample of 15 ppm.

Which ONE (1) of the following actions should the Unit Supervisor take per the Technical Requirements Manual and why?

Within six (6) hours, place the Unit in...

A. MODE 2 because the fluoride concentration has exceeded the transient limit.

B. <u>MODE 3 because the fluoride concentration has exceeded the transient limit.</u>

C. MODE 2 because the fluoride concentration has exceeded the steady-state limit.

D. MODE 3 because the fluoride concentration has exceeded the steady-state limit.

Examination Outline Cross-reference:

Level	RO	SRO
Tier #		3
Group #		2
K/A #	G 2.2.35	
Importance Rating		4.5

Equipment Control: Ability to determine Technical Specification Mode of Operation

Proposed Question: SRO 96

With the Unit operating in MODE 1, a Limiting Condition for Operation (LCO) is exceeded while performing maintenance on a component such that an LCO 3.0.3 condition arises.

If the LCO is applicable in MODEs 1, 2 and 3, which ONE (1) of the following describes the ACTION required?

A. Within 1 hour take action to place the Unit in MODE 3 within 7 hours; and MODE 4 within 13 hours.

B. Immediately place the Unit in MODE 2 and enter MODE 3 within 6 hours and MODE 4 within the following 12 hours.

C. Within 1 hour take action to place the Unit in MODE 3 within 6 hours and MODE 4 within 12 hours.

D. Immediately commence a down power to place the Unit in MODE 3 within 7 hours and MODE 4 within 13 hours.

Proposed Answer: A

Explanation:

A. Correct. Per Technical Specification LCO 3.0.3.
B. Incorrect. Plausible because MODE 4 must ultimately be entered, however, the Station has up to one hour to place the Unit in MODE 3.
C. Incorrect. Plausible because the initial ACTION is correct, however, MODE 3 entry must be made within 7 hours and MODE 4 entry within 13 hours.
D. Incorrect. Plausible because the MODE entry actions are correct, however, the Station has up to one hour to place the Unit in MODE 3.

Technical Reference(s) Technical Specification 3.0.3 Attached w/ Revision # See Comments / Reference

Proposed references to be provided during examination: None

Learning Objective: LO21.RLS.SL1.OB08 **EXPLAIN** the proper use of the LCO Applicability section in the Technical Specifications.

Question Source: Bank # RLS.SL1.OB08-14
Modified Bank # _____ (Note changes or attach parent)
New _____

Question History: Last NRC Exam _____

Question Cognitive Level: Memory or Fundamental Knowledge X
Comprehension or Analysis _____

10 CFR Part 55 Content: 55.41 _____
55.43 5

Comments / Reference: From Technical Specification 3.0.3	Amendment # 64

3.0 LIMITING CONDITION FOR OPERATION (LCO) APPLICABILITY

LCO 3.0.1

LCOs shall be met during the MODES or other specified conditions in the Applicability, except as provided in LCO 3.0.2 and LCO 3.0.7.

LCO 3.0.2

Upon discovery of a failure to meet an LCO, the Required Actions of the associated Conditions shall be met, except as provided in LCO 3.0.5 and LCO 3.0.6.

If the LCO is met or is no longer applicable prior to expiration of the specified Completion Time(s), completion of the Required Action(s) is not required unless otherwise stated.

LCO 3.0.3

When an LCO is not met and the associated ACTIONS are not met, an associated ACTION is not provided, or if directed by the associated ACTIONS, the unit shall be placed in a MODE or other specified condition in which the LCO is not applicable. Action shall be initiated within 1 hour to place the unit, as applicable, in:

a. MODE 3 within 7 hours;

b. MODE 4 within 13 hours; and

c. MODE 5 within 37 hours.

Exceptions to this Specification are stated in the individual Specifications.

Where corrective measures are completed that permit operation in accordance with the LCO or ACTIONS, completion of the actions required by LCO 3.0.3 is not required.

LCO 3.0.3 is only applicable in MODES 1, 2, 3, and 4.

Examination Outline Cross-reference:

Level	RO	SRO
Tier #		3
Group #		2
K/A #	G 2.2.7	
Importance Rating		3.6

Equipment Control: Knowledge of the process for conducting special or infrequent tests

Proposed Question: SRO 97

Which ONE (1) of the following individuals is expected to be the SRO in charge of High Risk, Infrequent Evolution, or Heightened Level of Awareness activities conducted on watch?

A. Line Manager, senior to the Shift Manager

B. Director, Operations

C. Shift Operations Manager

D. Unit Supervisor

Proposed Answer: D

Explanation:

A. Incorrect. Plausible because consideration is given to assigning this individual with the authority and experience to exercise continuous responsibility for the oversight of a particular test or evolution, however, it is the Unit Supervisor who acts as the SRO in charge.
B. Incorrect. Plausible because the Director of Operations normally holds an SRO license, however, they are not in charge of these activities.
C. Incorrect. Plausible because the Shift Operations Manager has management responsibilities at the Station, however, it is the Unit Supervisor who is the SRO in charge.
D. Correct. As prescribed in OWI-107.

Technical Reference(s) OWI-107, Step 6.2.2.F Attached w/ Revision # See Comments / Reference

Proposed references to be provided during examination: None

Learning Objective: OPD1.ADM.XA1.OB01 The Senior Reactor Operator shall be able to **DESCRIBE** the responsibilities of and **ASSUME** Control Room command function.

Question Source:

Bank #		
Modified Bank #		(Note changes or attach parent)
New	X	

Question History: Last NRC Exam

Question Cognitive Level: Memory or Fundamental Knowledge X
Comprehension or Analysis

10 CFR Part 55 Content: 55.41
55.43 5

Comments / Reference: From OWI-107, Step 6.2.2.F	Revision # 7

CPSES OPERATIONS DEPARTMENT WORK INSTRUCTIONS		PROCEDURE NO. OWI-107
OPERATIONS DEPARTMENT TURNOVER AND BRIEFING INSTRUCTIONS	REVISION NO. 7	PAGE 10 OF 12

6.2.2 D. Provisions for situations where varying levels of management or other additional personnel involvement are needed. Consideration for the temporary assignment of additional personnel under the direction of the shift supervisor to augment the shift crew may be desirable; for example, assignment of an engineer or coordinator for the test or evolution, or the assignment of an additional senior reactor operator during control rod manipulations. Another example may include data takers when the data required is not available readily to the assigned shift at their normal shift location. The duties, authority, and responsibility of any extra personnel should be delineated in writing and made clear in briefings. Industry experience has shown that the use of the term "test director" should be avoided because this title implies that the individual so assigned directs the operation of the plant and confuses the established chain of responsibility.

E. Before each infrequently performed test or evolution, consideration should be given to the need to designate a line manager, senior to the shift supervisor, who has the authority and experience to exercise continuous responsibility for the oversight of a particular test or evolution. The authority of this designated manager should be defined by policy or procedure. This authority should include control of the pace of the infrequently performed tests or evolutions and the resolution (or escalation) of problems encountered.

F. The Unit supervisor is expected to be the SRO in charge of High Risk, Heightened Level of Awareness, and Infrequent Evolutions and should give full attention to the activity. The Extra SRO should monitor routine activities for the unit while the Unit Supervisor is involved in the special activity. This responsibility may be reversed at the Shift Manager's discretion.

G. The Unit supervisor should ensure the individuals performing any High Risk, Heightened Level of Awareness, or Infrequent Evolution:

- Have performed the evolution previously,
- **OR** are being directly observed by a person experienced in the evolution,
- **OR** have been trained on the specific evolution.

Examination Outline Cross-reference:

Level	RO	SRO
Tier #		3
Group #		3
K/A #	G 2.3.15	
Importance Rating		3.1

Radiation Control: Knowledge of radiation monitoring systems, such as fixed radiation monitors and alarms, portable survey instruments, personnel monitoring equipment, etc

Proposed Question: SRO 98

Given the following conditions:

- Unit 2 is in MODE 3 preparing for a Reactor Startup.
- The Containment Gaseous Radiation Monitor is declared INOPERABLE.

Which ONE (1) of the following is the REQUIRED ACTION if the Containment Gaseous Radiation Monitor cannot be restored to OPERABLE status within four (4) hours?

A. Isolate the affected flow path by the use of at least one closed and de-activated automatic valve within one (1) hour.

B. Place and maintain the Containment Ventilation Valves in the CLOSED position within 72 hours.

C. Isolate the affected flow path by the use of at least one closed and de-activated automatic valve within 24 hours.

D. Place and maintain the Containment Ventilation Valves in the CLOSED position immediately.

Proposed Answer: A

Explanation:

A. Correct. As required per Technical Specification 3.6.3, CONDITION B.
B. Incorrect. Plausible because this answer would apply to CONDITION C for time requirement, however, the ACTION is incorrect and the valves are covered by CONDITION B.
C. Incorrect. Plausible because this ACTION is required, however, the time is based on valves not within leakage limits.
D. Incorrect. Plausible because the ACTION to enter TS 3.6.3 immediately when four (4) hours have elapsed is required, however, the time is one hour and the listed ACTION is incorrect.

Technical Reference(s) Tech Spec LCO 3.3.6.B
Tech Spec LCO 3.6.3.B
Attached w/ Revision # See Comments / Reference

Proposed references to be provided during examination: None

Learning Objective: LO21.RLS.SL1.OB12 Given a Technical Specification or a Technical Specification situation, **DIAGNOSE** the situation and **APPLY** the LCO and SR Applicability of Section 3.0 to **DETERMINE** all corrective actions.

Question Source: Bank # A00.SL3.OB00-8
Modified Bank # _____ (Note changes or attach parent)
New _____

Question History: Last NRC Exam _____

Question Cognitive Level: Memory or Fundamental Knowledge _____
Comprehension or Analysis X

10 CFR Part 55 Content: 55.41 _____
55.43 2

Comments / Reference: From Tech Spec LCO 3.3.6.B	Amendment # 86

3.3.6 Containment Ventilation Isolation Instrumentation

LCO 3.3.6 The Containment Ventilation Isolation instrumentation for each Function in Table 3.3.6-1 shall be OPERABLE.

APPLICABILITY: According to Table 3.3.6-1

ACTIONS

----------NOTE----------
Separate Condition entry is allowed for each Function.

CONDITION	REQUIRED ACTION	COMPLETION TIME
A. One radiation monitoring channel inoperable.	A.1 Restore the affected channel to OPERABLE status.	4 hours
B. ----------NOTE---------- Only applicable in MODE 1, 2, 3, or 4. ---------- One or more Automatic Actuation Logic and Actuation Relays trains inoperable. <u>OR</u> Required Action and associated Completion Time of Condition A not met.	----------NOTE---------- For Required Action and associated Completion Time of Condition A not met, the containment pressure relief valves may be opened in compliance with the gaseous effluent monitoring instrumentation requirements in Part I of the ODCM. ---------- B.1 Enter applicable Conditions and Required Actions of LCO 3.6.3, "Containment Isolation Valves," for containment ventilation isolation valves made inoperable by isolation instrumentation.	 Immediately

86

Comments / Reference: From Tech Spec LCO 3.6.3.B	Amendment # 64

3.6.3 Containment Isolation Valves

----------NOTE----------
Not applicable to Main Steam Safety Valves (MSSVs), Main Steam Isolation Valves (MSIVs), Feedwater Isolation Valves (FIVs) and Associated Bypass Valves, and Steam Generator Atmospheric Relief Valves (ARVs).

LCO 3.6.3 Each containment isolation valve shall be OPERABLE.

APPLICABILITY: MODES 1, 2, 3, and 4

ACTIONS

----------NOTES----------

1. Penetration flow path(s) except for 48 inch containment and 12 inch hydrogen purge valve flow paths may be unisolated intermittently under administrative controls.
2. Separate Condition entry is allowed for each penetration flow path.
3. Enter applicable Conditions and Required Actions for systems made inoperable by containment isolation valves.
4. Enter applicable Conditions and Required Actions of LCO 3.6.1, "Containment," when isolation valve leakage results in exceeding the overall containment leakage rate acceptance criteria.

CONDITION	REQUIRED ACTION	COMPLETION TIME
A. ----------NOTE---------- Only applicable to penetration flow paths with two containment isolation valves. ---------- One or more penetration flow paths with one containment isolation valve inoperable except for containment purge, hydrogen purge or containment pressure relief valve leakage not within limit.	A.1 Isolate the affected penetration flow path by use of at least one closed and de-activated automatic valve, closed manual valve, blind flange, or check valve with flow through the valve secured.	4 hours
	AND	
	A.2 ----------NOTES---------- 1. Isolation devices in high radiation areas may be verified by use of administrative means. 2. Isolation devices that are locked, sealed or otherwise secured may be verified by administrative means. ---------- Verify the affected penetration flow path is isolated.	Once per 31 days for isolation devices outside containment AND Prior to entering MODE 4 from MODE 5 if not performed within the previous 92 days for isolation devices inside containment

CONDITION	REQUIRED ACTION	COMPLETION TIME
B. ----------NOTE---------- Only applicable to penetration flow paths with two containment isolation valves. ---------- One or more penetration flow paths with two containment isolation valves inoperable except for containment purge, hydrogen purge or containment pressure relief valve leakage not within limit.	B.1 Isolate the affected penetration flow path by use of at least one closed and de-activated automatic valve, closed manual valve, or blind flange.	1 hour

Examination Outline Cross-reference:

Level	RO	SRO
Tier #		3
Group #		4
K/A #	G 2.4.30	
Importance Rating		4.1

Emergency Procedures/Plan: Knowledge of events related to system operation/status that must be reported to internal organizations or external agencies, such as the State, the NRC, or the transmission system operator

Proposed Question: SRO 99

Which ONE (1) of the following identifies the requirements of implementing 10 CFR 50.54(x) during performance of the Emergency Operating Procedures?

Implementation of 10 CFR 50.54(x) must be approved by the...

A. Shift Manager and requires NRC notification within one hour.

B. Director, Operations and requires NRC notification within one hour.

C. Shift Manager and requires NRC notification within 24 hours.

D. Director, Operations and requires NRC notification within 24 hours.

Proposed Answer: A

Explanation:

A. Correct. As prescribed in ODA-407.
B. Incorrect. Plausible because the NRC notification time is correct, however, it is the Shift Manager that approves implementation of 50.54(x) actions.
C. Incorrect. Plausible because Shift Manager approval is required, however, notification must be made within one hour.
D. Incorrect. Plausible if thought that the Director, Operations was the on-site authority to implement 50.54(x), however, it must be approved by that individual most cognizant of conditions at the time.

Technical Reference(s) LO21.RLS.SL9.LP, Page 5
ODA-407, Step 6.4.B

Attached w/ Revision # See Comments / Reference

Proposed references to be provided during examination: None

Learning Objective:
OPD1.ADM.XA1.OB21 **RESPOND** to plant emergencies in accordance with station procedures, including deviation from Technical Specifications and normal recovery methods when required, and **EVALUATE** plant and personnel response to emergencies.

LO21.ERG.XDC.OB04 **DESCRIBE** the policy and requirements included in the Code of Federal Regulations 10CFR50.54(x) regarding taking actions in violation of license conditions of Technical Specifications.

Question Source: Bank # _____
Modified Bank # _____ (Note changes or attach parent)
New X

Question History: Last NRC Exam _____

Question Cognitive Level: Memory or Fundamental Knowledge X
Comprehension or Analysis _____

10 CFR Part 55 Content: 55.41 _____
55.43 1

Comments / Reference: From LO21.RLS.SL9.LP, Page 5	Revision # 03/11/08

1. In emergencies, personnel may take reasonable action that departs from a license condition or Tech Specs when this action is immediately needed to protect the public health and safety and no action consistent with license conditions and Tech Specs, that can provide adequate or equivalent protection, is immediately apparent. These actions shall be approved by the SM prior to taking such actions. This action is allowed per 10CFR50.54(x) and requires a 1 hour notification under 10CFR50.72.

Comments / Reference: From ODA-407, Step 6.4.B	Revision # 12

CPSES OPERATIONS DEPARTMENT ADMINISTRATION MANUAL		PROCEDURE NO. ODA-407
GUIDELINE ON USE OF PROCEDURES	REVISION NO. 12	PAGE 10 OF 41

6.3 Use of N/A

A. Sections of a procedure that are not required to be performed need not be completely filled-in (i.e., N/A is not required in each space).

B. Steps which are identified as Commitments indicated by [C] in left margin, shall not be marked N/A unless a review is performed that determines the step omission does not result in a deviation from requirements in the License Basis Documents.

C. Procedure steps may be N/A when the step specifies a choice of actions to be performed (e.g., Start Train A OR B).

D. Procedure steps may be N/A when a specific condition must be met for the step to apply (e.g., IF, THEN). IF the condition is not met in a conditional step, substeps may also be N/A.

E. Procedure steps may be N/A when the step does not apply to the scope or conditions under which the activity is being performed. Perform the following:

[C] 1) Prior to marking the step or prerequisite N/A, the user shall obtain Shift Manager, Unit Supervisor or Radwaste Supervisor approval. The approval authority shall ensure, as a minimum, that non-performance of the step does not violate the intent of the procedure, create an unsafe plant condition or violate Technical Specifications.

[C] 2) Document, sign and date the reason and justification for this N/A in the comments section of the procedure, on the discrepancy sheet (ODA-407-7), Unit Log or equivalent.

3) A review by an additional supervisor should be obtained when these N/A provisions are used. This additional review should be documented as specified in 6.3E.2.

4) IF the N/A'd step must be performed at a later date when plant conditions are established, THEN the justification for the use of N/A should describe the process or control that will ensure completion of that step (e.g., Caution Tag Clearance, Schedule).

Otherwise, process a PCN per STA-202.

6.4 Abnormal and Emergency Condition

A. During an emergency or abnormal condition which presents a hazard to personnel or equipment or which could result in a release of radioactivity to the environment, operators may take any action deemed necessary to protect personnel or equipment.

[C] B. In emergencies, personnel may take reasonable action that departs from a license condition (Security Plan, Emergency Plan, or specific NRC license restriction) or Technical Specifications when this action is immediately needed to protect the public health and safety and no action consistent with license conditions and Technical Specifications that can provide adequate or equivalent protection is immediately apparent. These actions shall be approved by the Shift Manager prior to taking such actions. This action is allowed per 10CFR50.54(x) and requires a 1 hour notification under 10CFR50.72.

Examination Outline Cross-reference:

Level	RO	SRO
Tier #		3
Group #		4
K/A #	G 2.4.11	
Importance Rating		4.2

Emergency Procedures/Plan: Knowledge of the abnormal condition procedures

Proposed Question: SRO 100

Given the following conditions:

- Unit 1 tripped due to a Feedwater Control Valve failure three days ago.
- ODA-108, Post RPS/ESF Actuation Evaluation, is complete and all reviews were acceptable.

Which ONE (1) of the following authorizes the MODE change to re-start the Unit?

A. Shift Manager

B. Director, Operations

C. Station Operations Review Committee

D. Plant Manager

Proposed Answer: B

Explanation:

A. Incorrect. Plausible because they are in the review chain and this was a “clean” trip.
B. Correct. As outlined in ODA-108.
C. Incorrect. Plausible because they must review and recommend approval to the Plant Manager if reviews were unacceptable.
D. Incorrect. Plausible because he must review and approve if reviews were unacceptable.

Technical Reference(s) ODA-108, Post RPS/ESF Actuation Eval Attached w/ Revision # See Comments / Reference

Proposed references to be provided during examination: None

Learning Objective:
OP21.ADM.XAF.OB08 **STATE** who can authorize a restart after a reactor trip.

Question Source:

Bank #		
Modified Bank #		(Note changes or attach parent)
New	X	

Question History: Last NRC Exam _____

Question Cognitive Level: Memory or Fundamental Knowledge X
Comprehension or Analysis _____

10 CFR Part 55 Content: 55.41 _____
55.43 3

Comments / Reference: From ODA-108, Post RPS/ESF Actuation Evaluation	Revision # 14

IX. REPORT REVIEW AND MODE CHANGE APPROVAL

(A). Root cause of event determined? Yes [ ] No* [ ]
Followup actions AND restraints identified? Yes [ ] No* [ ] N/A [ ]

Prepared by: _____ Date _____ Time _____

Reviewed by: _____ Date _____ Time _____
STA review, if evaluation not prepared by STA.

(B). Review Criteria satisfied? Yes [ ] No* [ ]

_____ Date _____ Time _____
STA

Review Criteria satisfied? Yes [ ] No* [ ]

_____ Date _____ Time _____
Shift Manager

(C). Approval for MODE change granted by:

_____ Date _____ Time _____
Director, Operations

(D). If review criteria are not met, Station Operations Review Committee shall resolve the concerns and attach conclusions to this page.

SORC recommends MODE change authorization to the Plant Manager. _____
SORC Meeting No.

_____ Date _____ Time _____
SORC Chairman

Approval for MODE Change granted by:

_____ Date _____ Time _____
Plant Manager

* Attach a full explanation to this page.

CPNPP Mar 2009 Written Exam Reference List

1. NRC Generic Fundamentals Equation Sheet
2. TDM-401A, Reactive Capability Curve
3. EPP-201, Attachment 1, Emergency Classification Charts
4. EPP-201, Attachment 2, Bases for Emergency Classification Charts
5. Steam Tables

GENERIC FUNDAMENTALS EXAMINATION
EQUATIONS AND CONVERSIONS HANDOUT SHEET

EQUATIONS

$\dot{Q} = \dot{m}c_p\Delta T$

$\dot{Q} = \dot{m}\Delta h$

$\dot{Q} = UA\Delta T$

$\dot{Q} \propto \dot{m}^3_{Nat\ Circ}$

$\Delta T \propto \dot{m}^2_{Nat\ Circ}$

$K_{eff} = 1/(1 - \rho)$

$\rho = (K_{eff} - 1)/K_{eff}$

$SUR = 26.06/\tau$

$$\tau = \frac{\bar{\beta}_{eff} - \rho}{\lambda_{eff}\ \rho}$$

$$\rho = \frac{\ell^*}{\tau} + \frac{\bar{\beta}_{eff}}{1 + \lambda_{eff}\ \tau}$$

$\ell^* = 1 \times 10^{-4}$ sec

$\lambda_{eff} = 0.1\ sec^{-1}$ (for small positive ρ)

$DRW \propto \varphi^2_{tip}/\varphi^2_{avg}$

$P = P_o 10^{SUR(t)}$

$P = P_o e^{(t/\tau)}$

$A = A_o e^{-\lambda t}$

$CR_{S/D} = S/(1 - K_{eff})$

$CR_1(1 - K_{eff1}) = CR_2(1 - K_{eff2})$

$1/M = CR_1/CR_X$

$A = \pi r^2$

$F = PA$

$\dot{m} = \rho A\vec{v}$

$\dot{W}_{Pump} = \dot{m}\Delta P\upsilon$

$E = IR$

Thermal Efficiency = Net Work Out/Energy In

$$\frac{g(z_2 - z_1)}{g_c} + \frac{(\vec{v}_2^{\,2} - \vec{v}_1^{\,2})}{2g_c} + \upsilon(P_2 - P_1) + (u_2 - u_1) + (q - w) = 0$$

$g_c = 32.2$ lbm-ft/lbf-sec^2

CONVERSIONS

---

1 Mw	$= 3.41 \times 10^6$ Btu/hr	1 Curie	$= 3.7 \times 10^{10}$ dps
1 hp	$= 2.54 \times 10^3$ Btu/hr	1 kg	= 2.21 lbm
1 Btu	= 778 ft-lbf	1 gal_{water}	= 8.35 lbm
°C	= (5/9)(°F - 32)	1 ft^3_{water}	= 7.48 gal
°F	= (9/5)(°C) + 32		

REACTIVE CAPABILITY CURVE

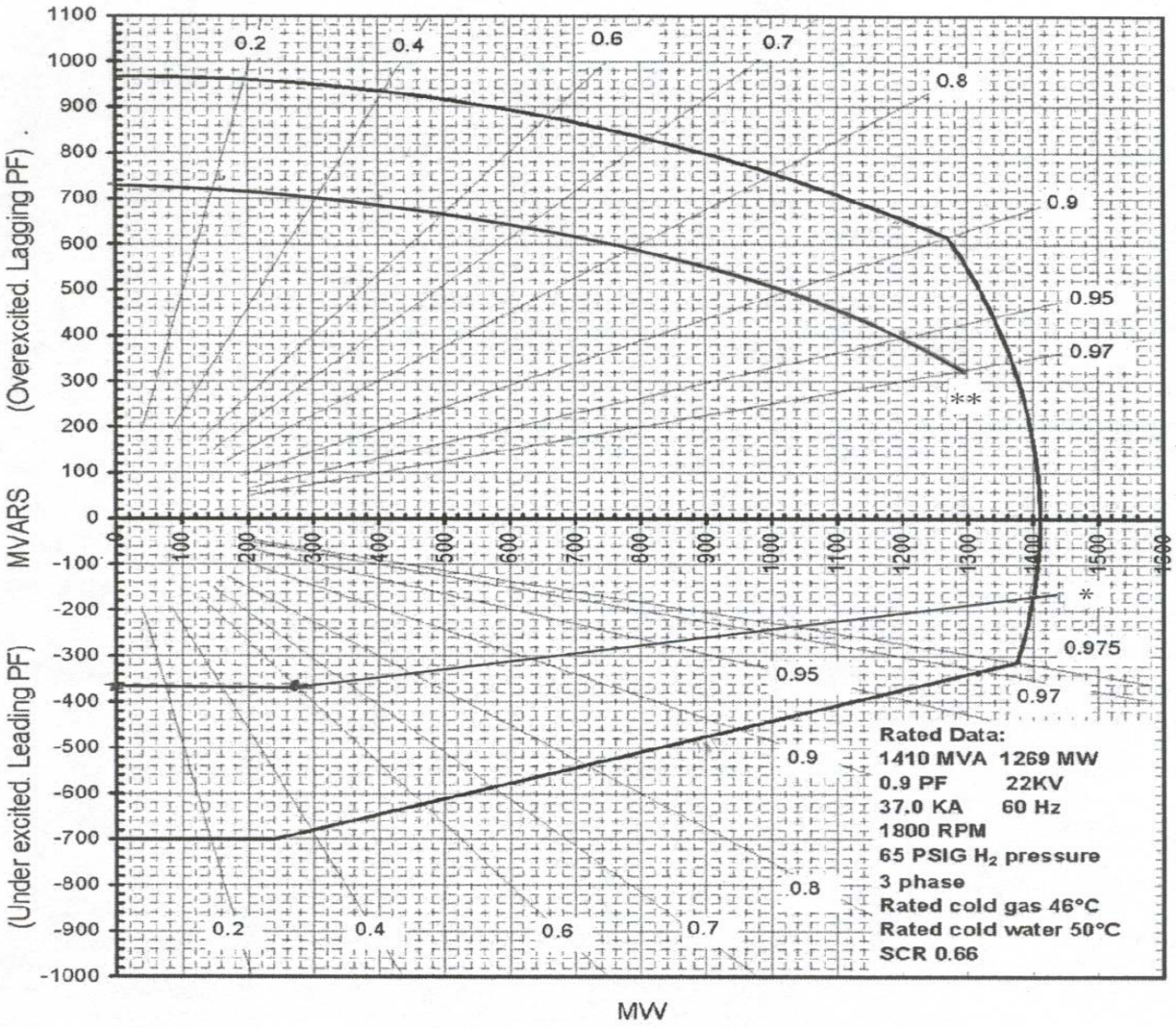

- Unit 1 gross MWs varies between 1249 MW (summer) and 1279 MW (winter)
- 6900 Volt bus limits are 6480 to 7150 volts
- 345 kV switchyard limits are 340 to 361 kV (Transmission limits have been more restrictive)
- Generator output voltage range is limited to 19.9 to 22.9 kV (GSU input voltage is limited to 22.9 kV maximum and an estimated lagging MVAR limit is shown above **)
- Generator field current is limited to 9007 amps.
- Under excitation Voltage Limit * curve (Leading MVARs) is shown above.

TITLE: REACTIVE CAPABILITY CURVE

SOURCE: SIEMENS CURVE C-080421, Submitted to ERCOT, ETP-110A

RADIOACTIVE EFFLUENT RELEASE

EPP-201 REV. 11 CHART 1

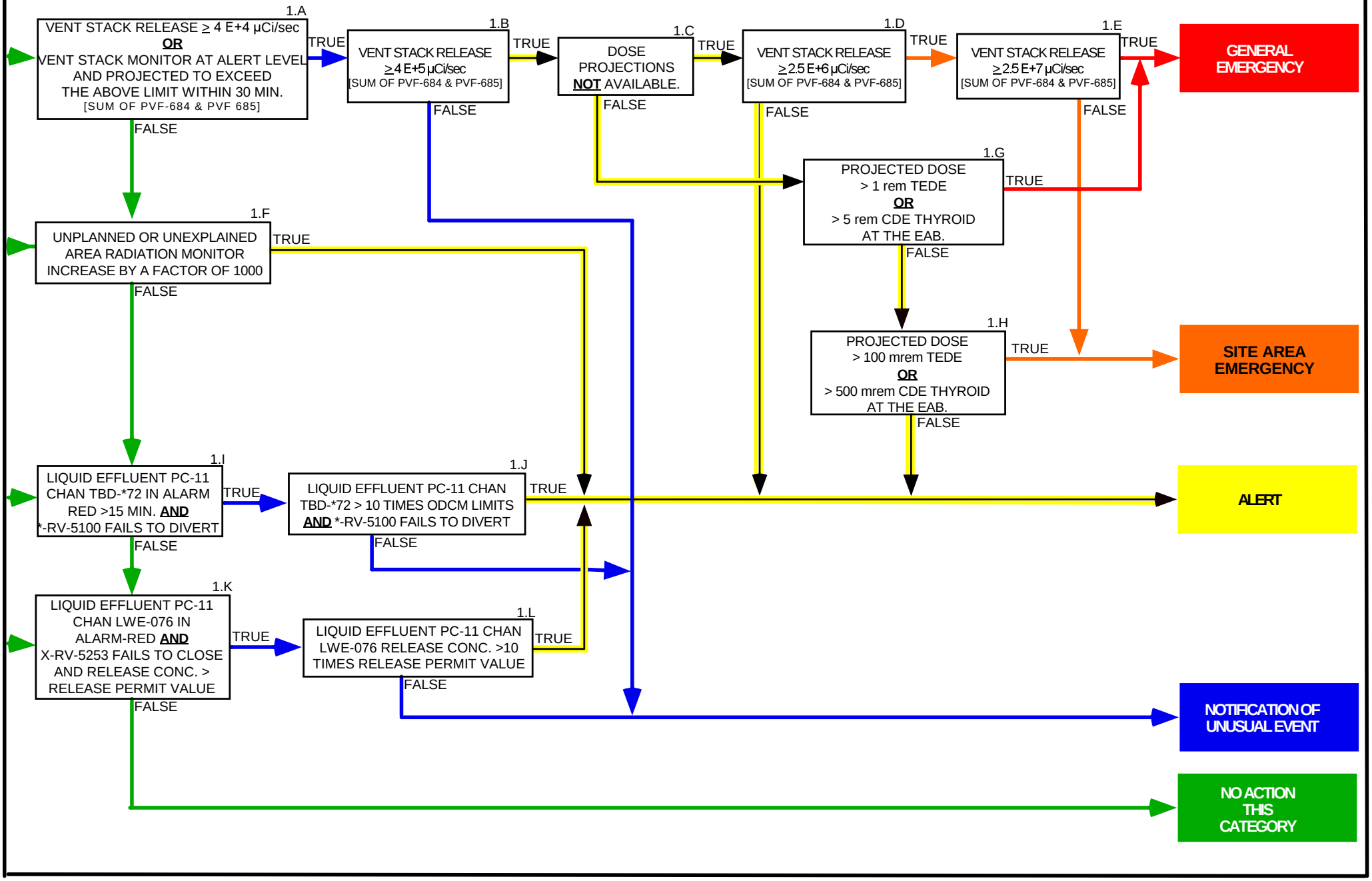

LOSS OF REACTOR COOLANT BOUNDARY

EPP-201 REV. 11 CHART 2

NOTE: THIS CHART SHALL NOT BE USED IF A STEAM GENERATOR TUBE FAILURE IS THE ONLY EVENT. GO TO CHART 3, "STEAM GENERATOR TUBE FAILURE".

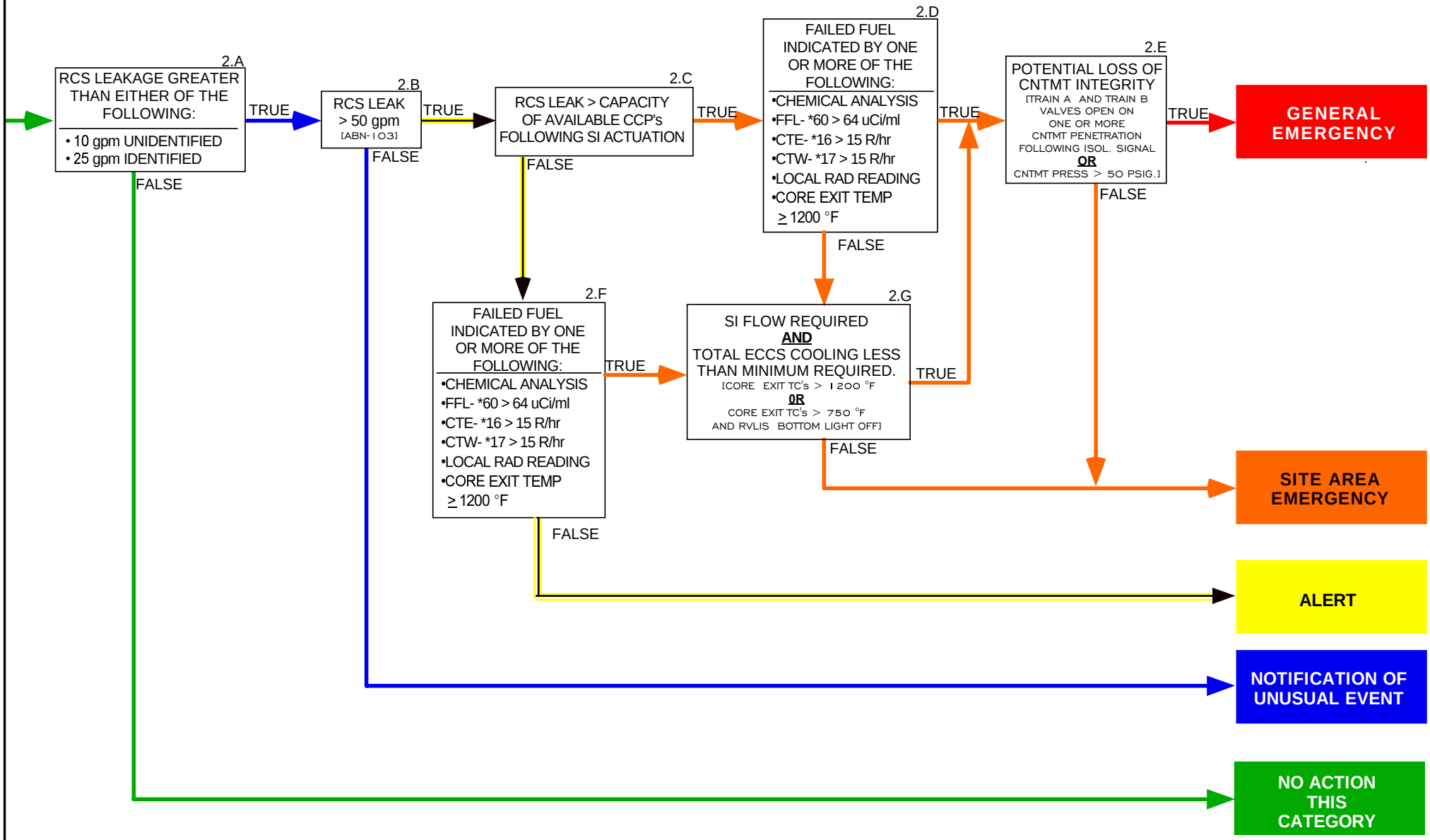

STEAM GENERATOR TUBE FAILURE

EPP-201 REV. 11 CHART 3

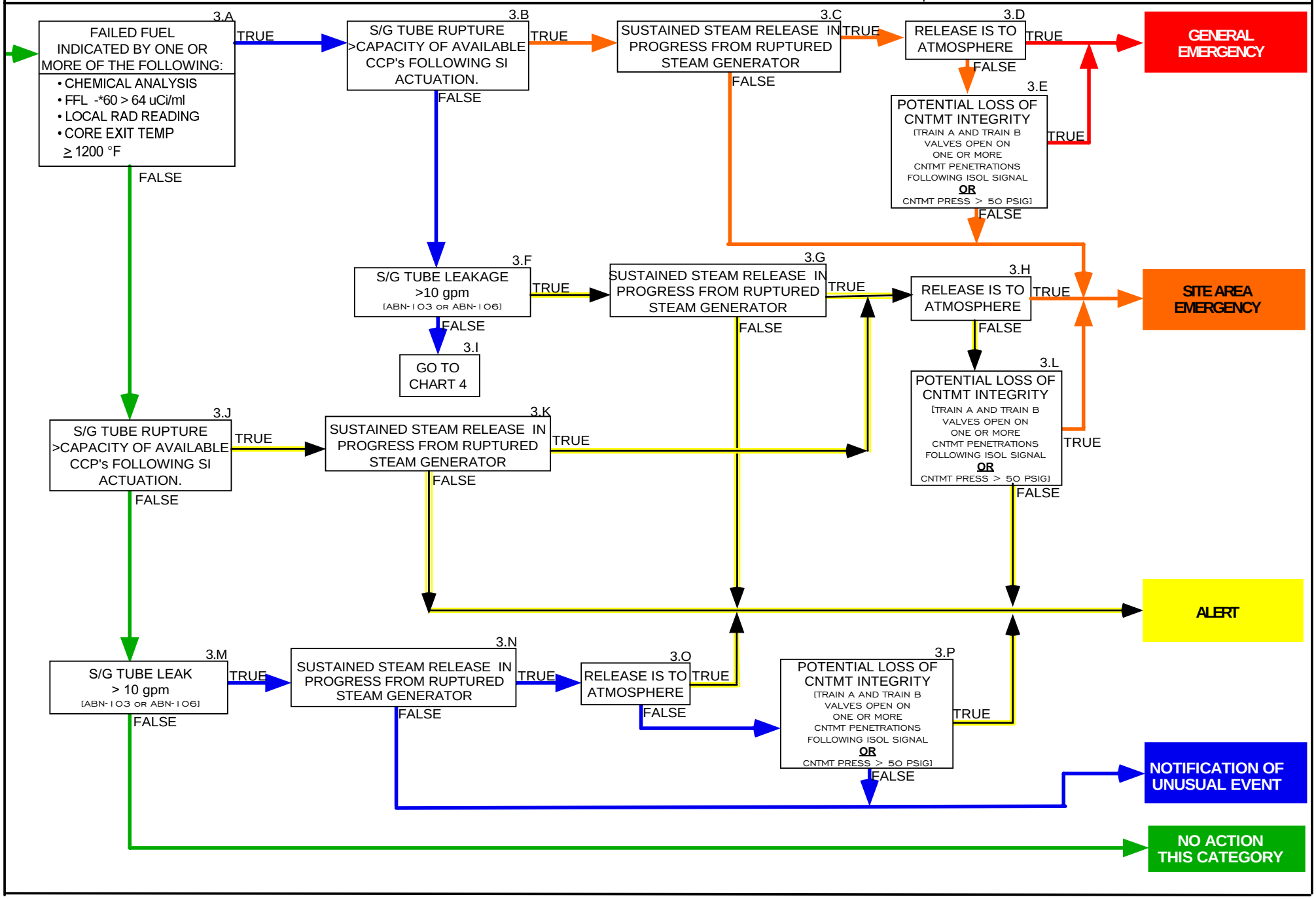

FUEL ELEMENT / COOLDOWN EVENTS

EPP-201 REV 11 CHART 4

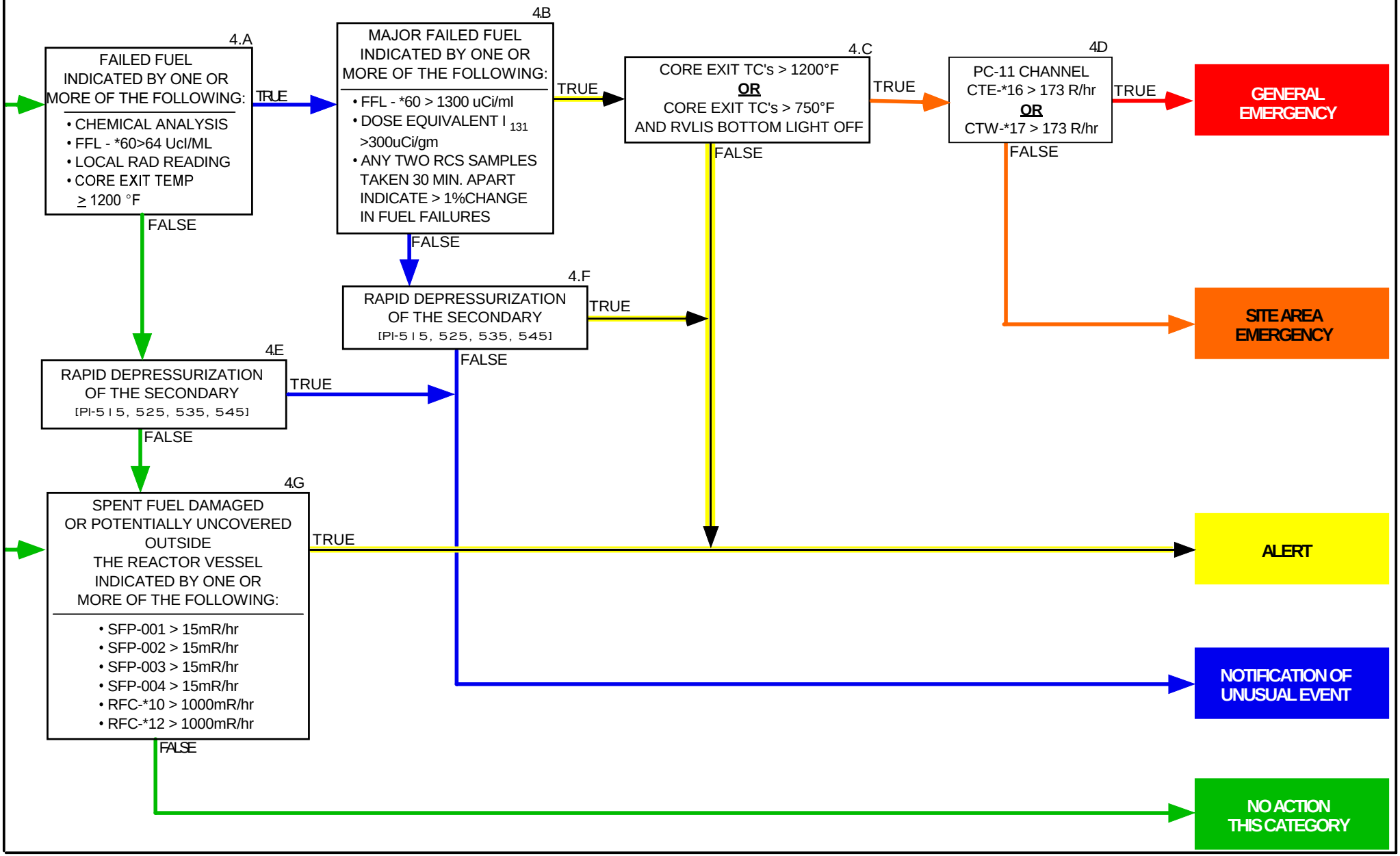

LOSS OF ELECTRICAL POWER/ASSESSMENT CAPABILITIES/ADMIN

EPP-201 REV. 11 CHART 5

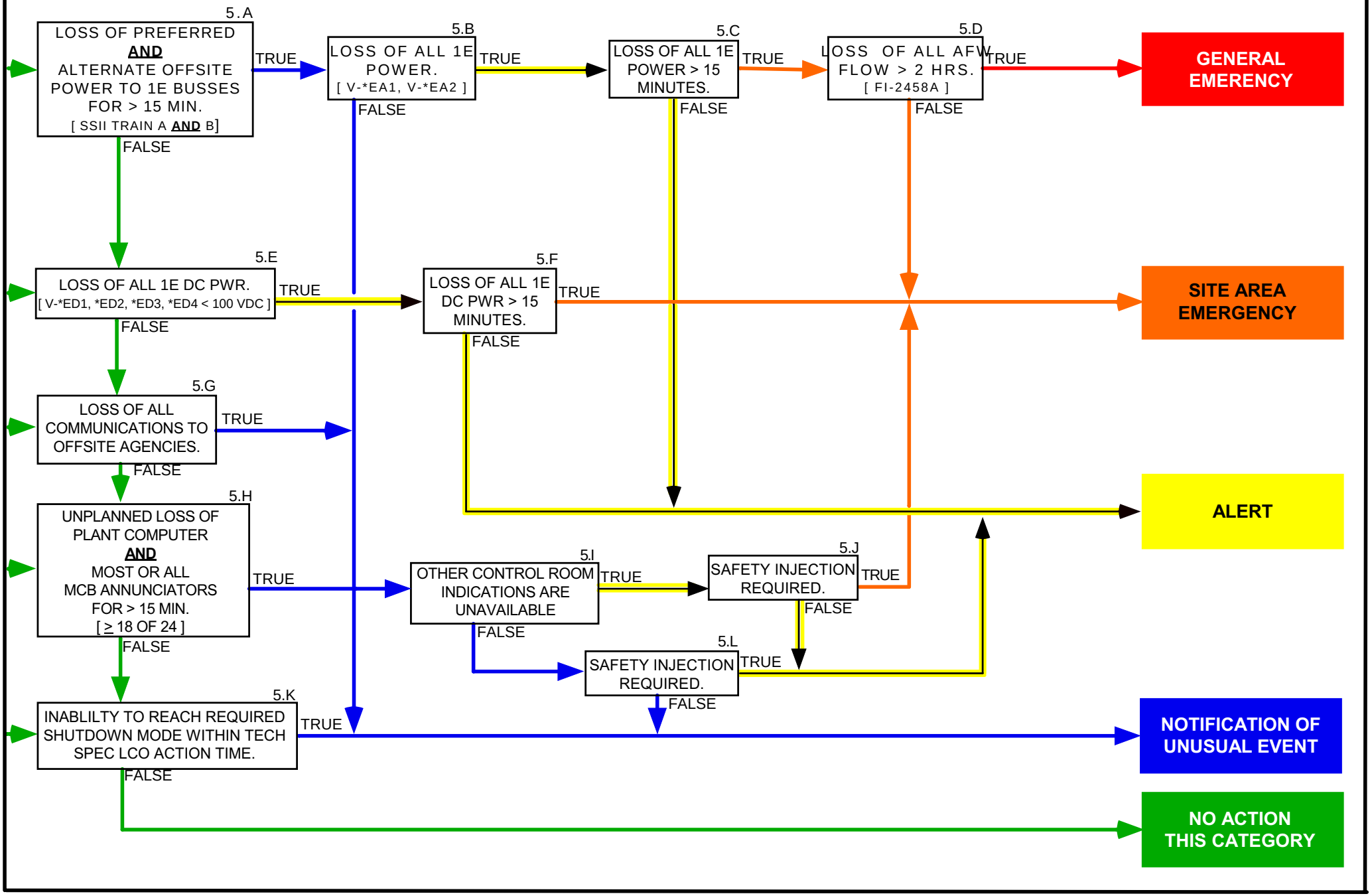

SAFETY SYSTEM FAILURE OR MALFUNCTION

EPP-201 REV. 11 CHART 6

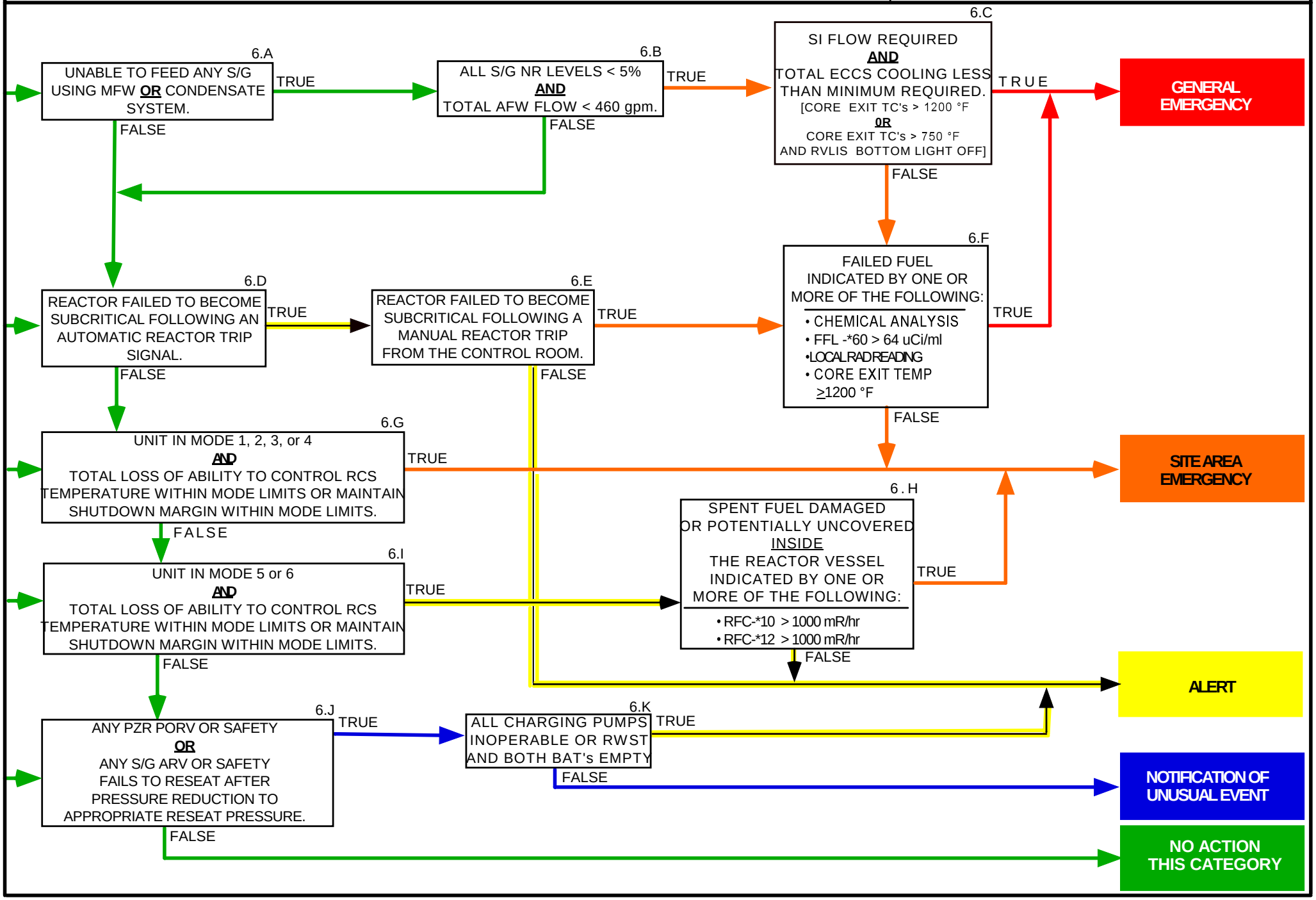

LOSS OF PLANT CONTROL / SECURITY COMPROMISE

EPP-201 REV 11 CHART 7

NOTE: CONSIDERATION OF CHART 9 "OTHER HAZARDS" SHOULD BE MADE IN THE CASE OF AN AIRCRAFT IMPACT, IF MALICIOUS ACTIVITY IS NOT INDICATED.

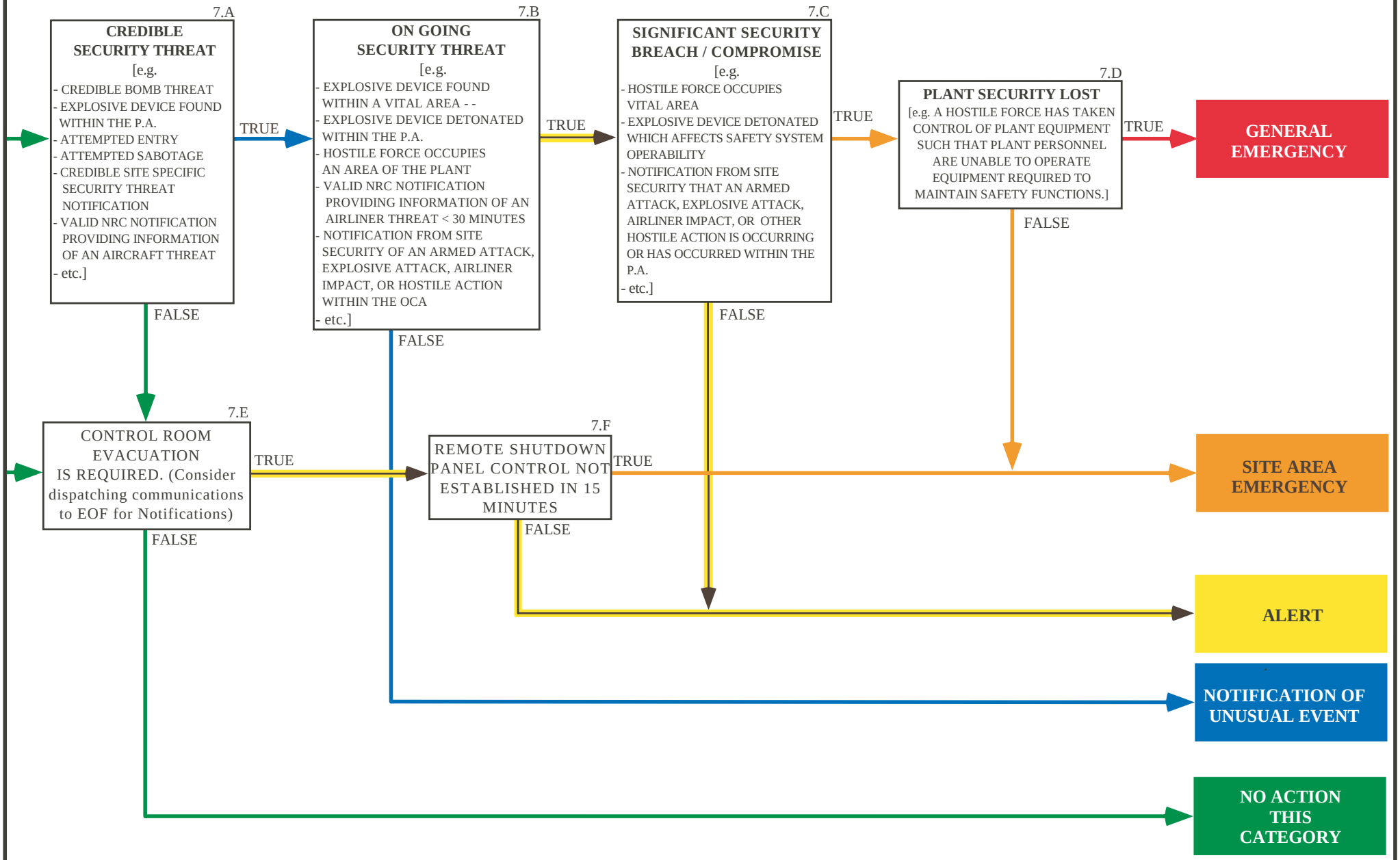

NOTE: FOR ADDITIONAL INFORMATION THE SHIFT MANAGER SHOULD CONSULT THE SECURITY CONTINGENCY PLAN.

NATURAL PHENOMENA

EPP-201 REV 11 CHART 8

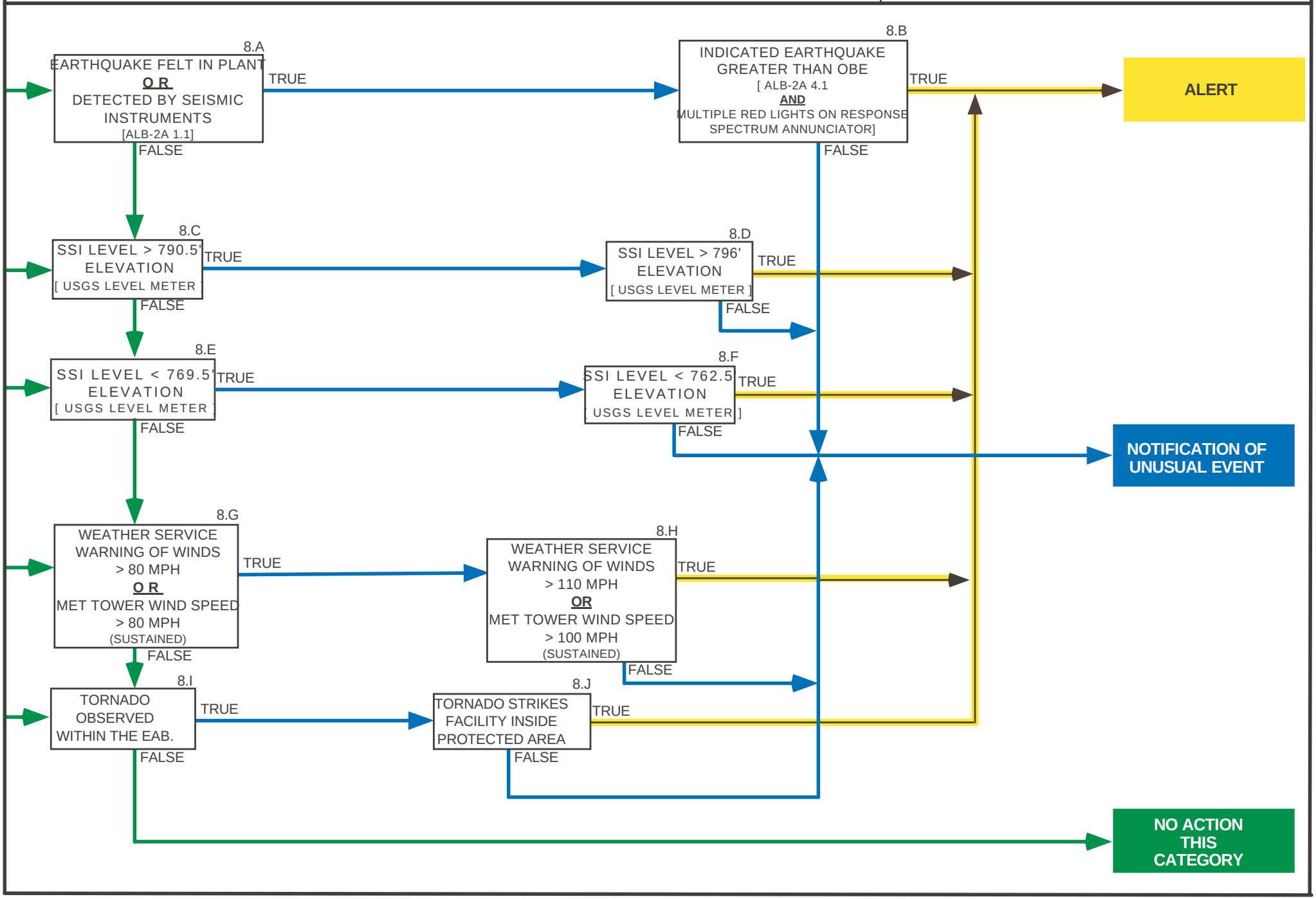

OTHER HAZARDS

EPP-201 REV 11 CHART 9

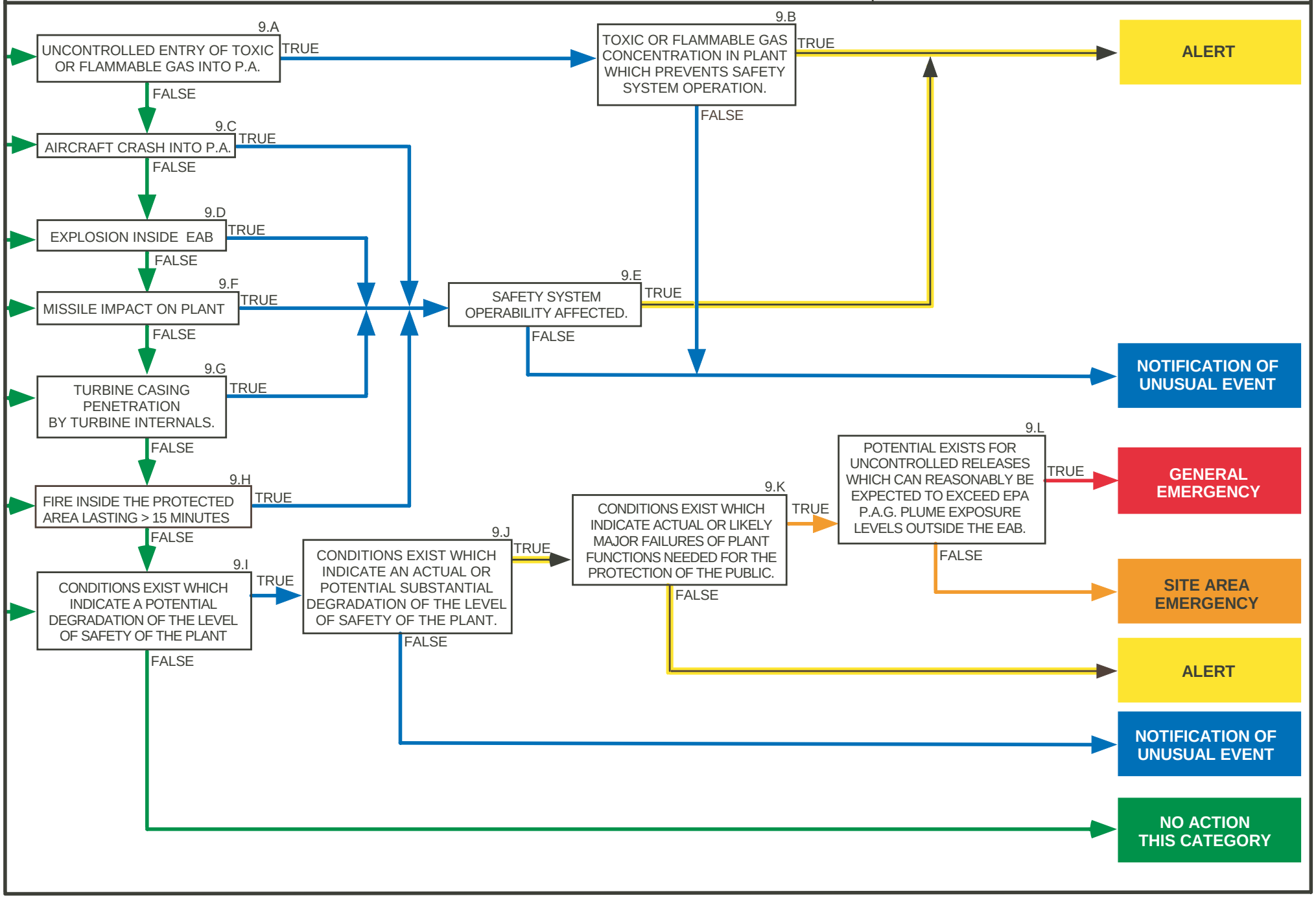

ATTACHMENT 2
Page 1 of 10

GENERIC RULES for CLASSIFICATION CHARTS

A. Always check all classification charts. Many events can warrant different classifications based on different charts.

B. Start on the left side of the flowchart to be evaluated.Identify the entry arrows associated with the flowchart. Some flowcharts will contain multiple entry points. These entry points are identified by boxes on the left hand side having an entry arrow. Follow the arrows horizontally for true statements and vertically for false statements.

C. Information in brackets "[ ]" is intended as a recommended place to look to determine if the statement is true. These indicators are not intended to be all inclusive nor are these indicators absolute indication that an emergency exists.

D. An asterisk "*" in an instrument number indicates that either 1 or 2 could be used as a unit designator. For example, V-*EA1 means V-1EA1 or V-2EA1.

E. Color coding used in the charts is as follows:

GREEN	-	No action (check STA-501 for reportability)
BLUE	-	Notification of Unusual Event
YELLOW	-	Alert
ORANGE	-	Site Area Emergency
RED	-	General Emergency

F. If possible, readings from process and area radiation monitors should be verified by cross-checking other potentially affected systems or areas.

G. For diagnostic indications other than ATWT involving changing plant parameters, indications used to determine whether the box is true or false should be based on parameter values at the time the evaluation is performed. This rule of usage assumes that plant systems are functioning as designed and that all other related parameters are also being used to make the final determination.

If conditions (other than ATWT) warranting an emergency classification did occur, <u>but no longer exist</u>, an emergency declaration should not be made, but non-routine reporting IAW STA-501 is required to satisfy 10CFR50.72(b).

H. Chart 6, "Safety System Failure or Malfunction," provides diagnostic indications for Anticipated Transient Without Trip (ATWT) conditions. Once ATWT conditions are satisfied, subsequent evaluations using this chart must assume that an ATWT condition exists until the event is closed out by plant management.

I. All times referenced in decision blocks start upon initiation of the event in question, not time of entry into the block.

J. The Emergency Coordinator should consider the effect that combinations of initiating events have upon the Emergency Classification level. That is, events if taken individually would constitute a lower Emergency Classification level but collectively may exceed the intent for a higher Emergency Classification level.

This is not intended to imply that events are additive. For example, if a single event may be classified on two different charts as an NOUE, declaration of an Alert would not be appropriate.

BASES for RADIOACTIVE EFFLUENT RELEASE

EPP-201 REV. 11 CHART 1

1.A **Combined** vent stack release rate which could result in greater than ODCM allowable limits under nominal release conditions. If only 1 stack reading is available, double it's reading for a **combined** vent stack release rate. (NUREG-0654)

1.B **Combined** vent stack release rate which could result in a site boundary exposure 10 times the value of block 1.A. This level is chosen to represent a release that, if allowed to continue for 2 hours, could result in a site boundary exposure of 1 mrem. (NUREG-0654)

1.C Dose projection results, using actual release conditions, are preferred for comparison to blocks 1.G. and/or 1.H. Generally 15 minutes is allowed to produce dose projections. Any longer than 15 minutes and classifications should be based on monitor readings. (NUMARC NESP-007)
(Blocks 1.D and 1.E approximate the doses of blocks 1.G and 1.H; <u>if projections</u> are <u>not</u> available)

1.D **Combined** vent stack release rate calculated to result in a dose of approximately 100 mrem TEDE at the site boundary under nominal release conditions. (NUMARC NESP-007)

1.E **Combined** vent stack release rate calculated to result in a dose of approximately 1 rem TEDE at the site boundary under nominal release conditions. (NUMARC NESP-007)

1.F Confirmed **AREA** Radiation Monitor reading which provides positive indication of a severe loss of control of radioactive materials. (NUMARC NESP-007)

1.G Used with dose projections based on actual release conditions. Doses listed are IAW the EPA-400 Protective Action Guides. (NUMARC NESP-007)

1.H Used with dose projections based on actual release conditions. Doses listed are 10% of the EPA-400 Protective Action Guides. 10% of the EPA PAG's (100 mrem) is considered appropriate since it corresponds to the annual non-occupational exposure limit. (NUMARC NESP-007)

1.I Liquid release for $\geq$ 15 minutes from the Turbine Building with failure to terminate release flow on a corresponding process alarm. Based more on the loss of control of the Radiological Effluent System than on the actual radiological release. (NUREG-0654)

1.J Liquid release from the Turbine Building at 10 times ODCM limits with failure to terminate release flow on a corresponding process alarm. This level is chosen to represent a release that, if allowed to continue for 2 hours, could result in a site boundary exposure of 1 mrem. (NUREG-0654)

1.K Liquid release from the Radioactive Waste System with failure to terminate release flow on a corresponding process alarm. Based more on the loss of control of the Radiological Effluent System than on the actual radiological release. (NUREG-0654)

1.L Unisolated liquid release from the Radioactive Waste System 10 times the value of the release permit. This level is chosen to represent a release that, if allowed to continue for 2 hours, could result in a site boundary exposure of 1 mrem. (NUREG-0654)

BASES for LOSS OF REACTOR COOLANT BOUNDARY

EPP-201 REV. 11 CHART 2

2.A RCS leakage greater than 10 GPM from an unidentified or pressure boundary source should be readily observable with normal Control Room indications (ABN-103 MCB estimate). Any value less than this would require time intensive determinations not consistent with these EAL's (OPT-303 calculation).
25 GPM from an identified source is chosen due to the lesser significance of leakage from an identified source vice one from an unidentified source. (NUMARC NESP-007)

2.B RCS leakrate (ABN-103 MCB estimate) indicating potential loss of the RCS fission product barrier. (NUREG-0654)

2.C Combination of RCS barrier failure and/or other conditions which may prevent sufficient makeup capability to keep the core covered and prevent fuel damage. Following SI initiation, determination should be made based on RCS pressure stabilizing above the pressure of the SI Pump discharge, independent of Pressurizer level. (NUREG-0654)

2.D Either chemical analysis as reported by Chemistry Department [CHM-506 determination] or one of the PC-11 monitors listed would constitute indication of minor (~1%) fuel cladding damage, well above any anticipated iodine spike concentration. FFL process monitor value is based on exceeding Tech Spec activity. CTE and CTW area monitor values are calculated from the FSAR 1% fuel damage source term. Local Rad reading is obtained by Chemistry Department after placing the Primary Sample sink in recirculation then taking a reading from a remote readout on a Model 300 and using a conversion factor translating an R/hr reading to Failed Fuel %. A reading of 10 R/hr is approximately equal to 1% failed fuel. (Ref. TE-97-106-00-00). Core exit temperature is based on maintaining a coolable geometry in the core (1200 °F CET temperature is the CSF RED path entry). (NUREG-0654)

2.E This block is based on the loss or potential loss of the Containment fission product barrier (includes known breach of containment penetration). Both the isolation valves must have failed to shut on 1 or more penetration (loss) **OR** a sufficient pressure exists within the Containment to challenge it's design capability (potential loss) **OR** a known loss of containment exists. 50 psig was chosen because it is the CSF RED Path entry criteria. (NUMARC NESP-007)

2.F Same as block 2.D.

2.G Failure to deliver the cooling necessary to prevent overheat damage to the core. 1200 °F CET temperature (CSF RED path) **OR** 750 °F CET temperature with level below the bottom RVLIS indication (CSF ORANGE path) represents a potential loss of the fuel cladding barrier. (NUMARC NESP-007)

BASES for STEAM GENERATOR TUBE RUPTURES

EPP-201 REV. 11 CHART 3

3.A Either chemical analysis as reported by Chemistry Department [CHM-506 determination] or one of the PC-11 monitors listed would constitute indication of minor (~1%) fuel cladding damage, well above any anticipated iodine spike concentration. FFL process monitor value is based on exceeding Tech Spec activity. Local Rad reading is obtained by Chemistry Department after placing the Primary Sample sink in recirculation then taking a reading from a remote readout on a Model 300 and using a conversion factor translating an R/hr reading to Failed Fuel %. A reading of 10 R/hr is approximately equal to 1% failed fuel. (Ref. TE-97-106-00-00) Core exit temperature is based on maintaining a coolable geometry in the core (1200 °F CET temperature is the CSF RED path entry). (NUREG-0654)

3.B Combination of RCS barrier failure and/or other conditions which may prevent sufficient makeup capability to keep the core covered and prevent fuel damage. Following SI initiation, determination should be made based on RCS pressure stabilizing above the pressure of the SI Pump discharge, independent of Pressurizer level. (NUREG-0654)

3.C Any release of steam $\geq$15 minutes from a ruptured S/G. This would include a S/G fault inside containment if not isolated within 15 minutes. Momentary steam releases via the S/G ARV's or safeties is not intended to result in an escalation. (NUREG-0654)

3.D Release path of steam from the ruptured S/G is to the atmosphere.

3.E This block is based on the loss or potential loss of the Containment fission product barrier (includes known breach of containment penetration). Both the isolation valves must have failed to shut on 1 or more penetration (loss) **OR** sufficient pressure exists within the Containment to challenge it's design capability (potential loss). 50 psig was chosen because it is the CSF RED Path entry criteria **OR** a known loss of containment exists. (NUMARC NESP-007)

3.F SGTR leakage greater than 10 GPM should be readily observable with normal Control Room indications (ABN-103 or ABN-106 MCB estimate). Any value less than this would require time intensive determinations not consistent with these EAL's (OPT-303 calculation). (NUMARC NESP-007)

3.G Same as block 3.C
3.H Same as block 3.D

3.I (Prompt to classify using chart 4)

3.J Same as block 3.B

3.K Same as block 3.C
3.L Same as block 3.E
3.M Same as block 3.F
3.N Same as block 3.C
3.O Same as block 3.D
3.P Same as block 3.E

BASES for FUEL ELEMENT/COOLDOWN EVENTS

EPP-201 REV. 11 CHART 4

4.A Either chemical analysis as reported by Chemistry Department [CHM-506 determination] or FFL-*60 monitor would constitute indication of minor fuel cladding damage only, well above any anticipated iodine spike concentration. FFL process monitor value is based on exceeding Tech Spec activity. Local Rad reading is obtained by Chemistry Department after placing the Primary Sample sink in recirculation then taking a reading from a remote readout on a Model 300 and using a conversion factor translating an R/hr reading to Failed Fuel %. A reading of 10 R/hr is approximately equal to 1% failed fuel. (Ref. TE-97-106-00-00) Core exit temperature is based on maintaining a coolable geometry in the core (1200 °F CET temperature is the CSF RED path entry). (NUREG-0654)

4.B Advanced fuel cladding damage, probably in the range of a 1% - 5% failure. FFL process monitor value is calculated from an assumed 5% fuel cladding damage source term. DEI-131 is as reported by the Chemistry Department. Determining 1% change in fuel damage will probably require Engineering determination per EPP-312. (NUREG-0654)

4.C Failure to deliver the cooling necessary to prevent overheat damage to the core. 1200 °F CET temperature (CSF RED path) **OR** 750 °F CET temperature with level below the bottom RVLIS indication (CSF ORANGE path) represents a potential loss of the fuel cladding barrier. (NUMARC NESP-007)

4.D Major fuel damage with possible loss of coolable geometry, CTE and CTW area monitor values are calculated from an assumed 20% fuel cladding damage source term. (NUREG-0654)

4.E Actual, unisolable, depressurization sufficient to result in High Steamline Pressure Rate isolation signal. Concern is for uncontrolled RCS cooldown. (NUREG-0654)

4.F Same as block 4.E

4.G Damage or uncovery of a spent fuel assembly **outside** the reactor vessel. SFP and RFC radiation monitor values are based on water level above the fuel being significantly lower than Tech Spec value. Damage/uncovery of a new fuel assembly should not result in a radioactive release warranting emergency declaration. Higher than normal rad reading due to movement of components other than fuel assemblies (e.g. upper internals, core barrel, etc.) Do not warrant a TRUE from this box. (NUMARC NESP-007)

BASES for LOSS OF ELECTRICAL POWER/ASSESSMENT CAPABILITIES/ADMIN

EPP-201 REV. 11 CHART 5

5.A Prolonged loss of offsite AC power reduces the required system redundancies and makes the plant more vulnerable to a Station Blackout. 15 minutes was chosen to preclude momentary or transient power losses. (NUREG-0654)

5.B Momentary power loss to the vital AC busses. Momentary power losses due to automatic bus transfers do not apply. (NUREG-0654)

5.C Extended loss of all vital AC busses. Escalation beyond this level (SAE) requires consideration of the ability to keep the core cooled and covered. (NUREG-0654)

5.D Assumes other methods of keeping the core cooled are unavailable. The decision to escalate to GE should not be delayed if core cooling is challenged as shown by review of the CSF's. (NUREG-0654)

5.E Momentary or transient power loss to all vital DC busses. This considers the effect that a loss of vital DC power has on the control and monitoring functions needed to maintain the critical safety functions. (NUREG-0654)

5.F Extended loss of all vital DC busses. This considers the effect that a loss of vital DC power has on the control and monitoring functions needed to maintain the critical safety functions. There is no escalation beyond this level (SAE) on loss of DC power only. (NUREG-0654)

5.G **ALL** encompasses normal telephone, FTS lines, fax machines, etc. Communications are required to both counties and the state. Intended to be used when extraordinary means (i.e.: radio relay of communications or dispatch of personnel directly to offsite agencies) are necessary to make these communications possible. (NUMARC NESP-007)

5.H 75% (18 of 24) is chosen as **most** of the MCB (horseshoe only) annunciators. This condition increases the probability of a degraded plant condition going undiagnosed. 15 minutes was chosen to preclude momentary or transient losses. (NUMARC NESP-007)

5.I Sufficient plant system indicators are available to the Control Room crew to monitor the plant without the need for additional operating personnel. (NUMARC NESP-007)

5.J SI, either automatic or manual, is the threshold for a significant plant transient in progress. This transient could require the use of the unavailable plant system indicators to safely monitor and control the transient. (NUMARC NESP-007)

5.K NOUE declaration is required when the plant is **NOT** brought to the required operating mode within the allowable action statement time in the Tech Specs. Declaration of NOUE is based on the time at which the LCO specified action statement time period lapses under the Tech Specs, and is not related to how long the plant conditions may have existed. (NUMARC NESP-007)

5.L Same as block 5.J.

BASES for SAFETY SYSTEM FAILURE or MALFUNCTION

EPP-201 REV. 11 CHART 6

6.A Degraded plant heat sink. The ability to feed even 1 S/G would cause a FALSE answer to this block. (NUREG-0654)

6.B Loss of heat sink as indicated by CSF RED path entry. (NUREG-0654)

6.C Failure to deliver the cooling necessary to prevent overheat damage to the core. 1200 °F CET temperature (CSF RED path) **OR** 750 °F CET temperature with level below the bottom RVLIS indication (CSF ORANGE path) represents a potential loss of the fuel cladding barrier. (NUMARC NESP-007)

6.D Based on the reactor **NOT** becoming subcritical once an RPS automatic trip setpoint has been exceeded. Anticipated transient without trip (ATWT). Once the conditions of box 6.D have been satisfied, these conditions must be considered to exist until the event is closed out by management. (NUREG-0654)

6.E Failure of trip breakers and/or control circuits, such that action away from the MCB is required to trip the reactor. (NUREG-0654)

6.F Either chemical analysis as reported by Chemistry Department [CHM-506 determination] or FFL-*60 monitor would constitute indication of fuel cladding damage, well above any anticipated iodine spike concentration. FFL process monitor value is based on Tech Spec activity. Core exit temperature is based on maintaining a coolable geometry in the core (1200 °F CET temperature is the CSF RED path entry). Local Rad reading is obtained by Chemistry Department after placing the Primary Sample sink in recirculation then taking a reading from a remote readout on a Model 300 and using a conversion factor translating an R/hr reading to Failed Fuel %. A reading of 10 R/hr is approximately equal to 1% failed fuel. (Ref. TE-97-106-00-00) (NUREG-0654)

6.G Focused on maintenance of functions instead of system status. This is a measure of the ability to remove decay heat (generally using a secondary heat sink, but could be RHR) and/or control reactivity. A loss which caused a heatup resulting in an unplanned MODE change would not warrant a declaration if MODE 3 or 4 can be maintained using available systems. (NUMARC NESP-007)

6.H Damage or uncovery of a spent fuel assembly **inside** the reactor vessel. RFC radiation monitor values are based on water level above the fuel being significantly lower than Tech Spec value. (NUMARC NESP-007)

6.I Focused on maintenance of functions instead of system status. Primarily a concern after entering MODE 5/6 then the subsequent loss of capability to remove decay heat and/or control reactivity. (NUMARC NESP-007)

6.J This block applies only to **UNISOLABLE** failures to reseat. PZR Safety and PORV's are addressed due to the loss of RCS inventory, therefore the leakage levels of block 2.A apply. S/G Safety and ARV's are addressed due to the uncontrolled RCS cooldown. Instrument related valve lifts that are resolved by switching channels are **NOT** intended to result in an emergency classification. (NUREG-0654)

6.K Provides escalation path for S/G Safety or ARV problems that could challenge S/D margin limits. (NUREG-0654)

BASES for LOSS of PLANT CONTROL / SECURITY COMPROMISE

EPP-201 REV. 11 CHART 7

7.A Based on CPSES Security Contingency Plan and NRC Bulletin 2005-02. (See Note 1) (NUREG-0654, NRC Bulletin 2005-02, S.O. 2002)

7.B Based on CPSES Security Contingency Plan and NRC Bulletin 2005-02. (See Note 1) (NUREG-0654, NRC Bulletin 2005-02)

7.C Based on CPSES Security Contingency Plan and NRC Bulletin 2005-02. (See Note 1) (NUREG-0654, NRC Bulletin 2005-02)

7.D This IC encompasses conditions under which a HOSTILE FORCE has taken physical control of VITAL AREAs (containing vital equipment or controls of vital equipment) required to maintain safety functions and control of that equipment cannot be transferred to and operated from another location. Typically, these safety functions for a PWR are reactivity control, RCS inventory, and secondary heat removal. If control of the plant equipment necessary to maintain safety functions cna be transferred to another, then the above initiating condition is not met.

This EAL includes loss of physical control of spent fuel pool cooling systems if imminent fuel damage is likely (e.g. freshly offloaded reactor core in the pool).

Loss of physical control of the control room or remote shutdown capability alone may not prevent the ability to maintain safety functions per se. Design of the remote shutdown capability and the location of the transfer switches should be taken in to account. (NEI 99-01 HG1)

7.E Control Room evacuation requires additional support for plant monitoring and/or direction of plant staff by the TSC, OSC, and/or EOF. (NUREG-0654)

7.F Control has been established when the necessary transfer switches (ABN-803 or ABN-905) have been shifted to the Remote Shutdown Panel. (NUREG-0654)

GENERAL NOTES:

1. The discovery of an unknown device would change the level of security interest (i.e. SECON level) but by itself would not meet the criteria for declaring an emergency. In determining whether or not a suspicious object is an explosive device several factors can be used. Does the device have characteristics of an explosive device (wiring to a timing device or fuse mechanism), a portion of the device appears to be an explosive (sticks of TNT or plastic explosive), a bomb threat is received that describes the appearance/location of the device, etc.

2. PA is the Protected Area.

3. Vital Areas are defined by Security controls. Vital Areas are listed on form STA-902-1.

BASES for NATURAL PHENOMENA

EPP-201 REV. 11 CHART 8

8.A Felt and recognized as an earthquake by a consensus of control room operators on duty in the plant. (NUMARC NESP-007)

8.B Possible damage or degradation of plant safety systems. Other indications of OBE earthquake include visible structural damage to any building containing systems or equipment required for safe shutdown of the plant. (NUMARC NESP-007)

8.C Calculated maximum SSI level during Probable Maximum Flood (PMF) from FSAR, Section 2.4.3.7. (NUMARC NESP-007)

8.D This is the elevation of the top of the SCR dam. (NUMARC NESP-007)

8.E Minimum level of the canal connecting the SSI to SCR. Level below this means the SSI is isolated from the reservoir. (NUMARC NESP-007)

8.F One foot above the minimum level assumed in FSAR, Section 2.4.11.5 for continued operation of a SSW pump. (NUMARC NESP-007)

8.G Design wind load of Seismic Category I structures is 80 mph. Sustained refers to $\geq$15 minutes. (NUMARC NESP-007)

8.H Winds which could cause loss of functions needed for safe shutdown of the plant. Sustained refers to $\geq$15 minutes. (NUMARC NESP-007)

8.I A tornado that has "touched down" in the Exclusion Area Boundary (EAB), not just an observed funnel cloud in the sky. (NUMARC NESP-007)

8.J A tornado that strikes plant structures or equipment, potentially damaging functions needed for safe shutdown of the plant. (NUMARC NESP-007)

BASES for OTHER HAZARDS

EPP-201 REV. 11 CHART 9

9.A Release of a toxic or flammable gas into the Protected Area in amounts that could affect the health and safety of plant personnel **OR** could affect normal operation of the plant. This does not apply to **minor** Hydrogen leaks, that do not affect plant operation. (NUMARC NESP-007)

9.B Either life threatening or hazardous gas concentration in the plant, which would jeopardize the ability to perform a safe plant shutdown. Not intended to apply to outlying structures (warehouses, shops, or offices) that do not contain systems or equipment necessary for safe shutdown. (NUMARC NESP-007)

9.C Actual crash into the Protected Area.

9.D Explosions in the Exclusion Area Boundary (EAB) that could adversely affect normal site activities. (NUMARC NESP-007)

9.E The event of the preceding blocks has or will result in degraded safety system performance, or visible damage to safety related structures and/or equipment. (NUMARC NESP-007)

9.F Not intended to apply to outlying structures (warehouses, shops, or offices) that do not contain systems or equipment necessary for safe shutdown. (NUMARC NESP-007)

9.G Based on the effects of this event on the continued operation of the plant and the safety of plant personnel. (NUREG-0654)

9.H Applicable to structures either housing or adjacent to structures housing safety related systems or equipment (i.e. power block). Not intended to apply to outlying structures (warehouses, shops, or offices) that do not contain systems or equipment necessary for safe shutdown. 15 minutes chosen to be consistent with other classification and notification requirements. The 15 minute clock begins when the fire is first detected, i.e: fire alarm received or verbal report is received in the Control Room. (NUMARC NESP-007)

9.I Addresses unanticipated conditions not specifically addressed elsewhere, but that warrant declaration of an emergency because conditions exist which are believed by the Emergency Coordinator to fall under the **Unusual Event** classification. (NUMARC NESP-007)

9.J Addresses unanticipated conditions not specifically addressed elsewhere, but that warrant declaration of an emergency because conditions exist which are believed by the Emergency Coordinator to fall under the **Alert** classification. (NUMARC NESP-007)

9.K Addresses unanticipated conditions not specifically addressed elsewhere, but that warrant declaration of an emergency because conditions exist which are believed by the Emergency Coordinator to fall under the **Site Area Emergency** classification. (NUMARC NESP-007)

9.L Addresses unanticipated conditions not specifically addressed elsewhere, but that warrant declaration of an emergency because conditions exist which are believed by the Emergency Coordinator to fall under the **General Emergency** classification. P.A.G.'s are EPA-400 Protective Action Guides. (NUMARC NESP-007)