TABLE OF CONTENTS

Section	Title	Page
8.0	**ELECTRIC POWER**	
8.1	**INTRODUCTION**	**8.1-1**
8.1.1	Utility Grid and Interconnections	8.1-1
8.1.2	Plant Electrical Power System	8.1-1
8.1.3	Safety-Related Loads	8.1-2
8.1.4	Design Bases	8.1-3
8.1.5	Design Criteria and Standards	8.1-4
8.1.5.1	Design Criteria	8.1-5
8.1.5.2	Other Standards and Guides	8.1-5
8.1.5.3	Compliance to Regulatory Guides and IEEE Standards	8.1-8
8.2	**OFFSITE (PREFERRED) POWER SYSTEM**	**8.2-1**
8.2.1	Description	8.2-1
8.2.1.1	Preferred Power Supply	8.2-1
8.2.1.2	Transmission Lines, Switchyard, and Transformers	8.2-3
8.2.1.3	Arrangement of the Start Boards, Unit Boards, Common Boards, and Reactor Coolant Pump (RCP) Boards	8.2-4
8.2.1.4	Arrangement of Electrical Control Area (Nuclear Plant)	8.2-5
8.2.1.5	Switchyard Control and Relaying	8.2-6
8.2.1.6	6.9-kV Start Boards Control and Relaying	8.2-8
8.2.1.7	6.9-kV Unit and RCP Board Control and Relaying	8.2-10
8.2.1.8	Conformance with Standards	8.2-11
8.2.2	Analysis	8.2-19
8.3	**ONSITE (STANDBY) POWER SYSTEM**	**8.3-1**
8.3.1	AC Power System	8.3-1
8.3.1.1	Description	8.3-1
8.3.1.2	Analysis	8.3-28
8.3.1.3	Physical Identification of Safety-Related Equipment in AC Power Systems 8.3-38	
8.3.1.4	Independence of Redundant ac Power Systems	8.3-38
8.3.2	DC Power System	8.3-55
8.3.2.1	Description	8.3-55
8.3.2.2	Analysis of Vital 125V DC Control Power Supply System	8.3-63
8.3.2.3	Physical Identification of Safety-Related Equipment in dc Power Systems 8.3-68	
8.3.2.4	Independence of Redundant DC Power Systems	8.3-68
8.3.2.5	Sharing of Batteries Between Units	8.3-68
8.3.3	Fire Protection for Cable Systems	8.3-70

TABLE OF CONTENTS

Section	Title	Page
8A	Analysis of Submerged Electrical Equipment (During Post LOCA) Powered from Auxiliary Power System	8A-1
8B	Analysis of Submerged Electrical Equipment (During Post LOCA) Powered from Instrumentation and Control Power System	8B-1
8C	Deleted by Amendment 75	8C-1
8D	IEEE STD 387-1984 FOR DIESEL-GENERATING UNITS APPLIED AS STAND-BY POWER	8D-1
8E	Probability/Reliability Analysis of Protection Device Schemes for Associated and Non-Class 1E Cables	8E-1

LIST OF TABLES

Section	Title
Table 8.1-1	Safety loads and functions
Table 8.1-2	Electrical Penetration Assembly Short-Circuit Capability
Table 8.2-1	Common Station Service Transformer (Csst) Loading
Table 8.2-1	Offsite Power System Equipment Capabilities – Worst-Case-Parameters (Continued)
Table 8.3-1	Safety-related Standby (Onsite) Power Sources And Distribution Boards
Table 8.3-2	Shutdown Board Loads Automatically Tripped Following A Loss of Preferred (Offsite) Power
Table 8.3-3	Diesel Generator Load Sequentially Applied Following A Loss of Preferred (Offsite) Power(1)
Table 8.3-4	Unit 1 Power Train A Board Loading
Table 8.3-5	Unit 1 Power Train B Board Loading
Table 8.3-6	Unit 2 Power Train A Board Loading
Table 8.3-7	Unit 2 Power Train B Board Loading
Table 8.3-8	Shutdown Transformer Loading
Table 8.3-9	D. C. Control Power For Safety-Related Standby (Onsite) Power Distribution Boards
Table 8.3-10	Components Having Manual Transfer Between Power Divisions
Table 8.3-11	120V A.C. Vital Instrument Power Board Load Data
Table 8.3-12	125 VDC Vital Battery Capacity Data
Table 8.3-13	Deleted by Amendment 75
Table 8.3-14	Deleted by Amendment 75
Table 8.3-15	Deleted by Amendment 75
Table 8.3-16	Deleted by Amendment 75
Table 8.3-17	Deleted by Amendment 75
Table 8.3-18	Deleted by Amendment 75
Table 8.3-19	Deleted by Amendment 71. Data is in Figure 8.3-47
Table 8.3-20	Deleted by Amendment 71. Data is in Figure 8.3-48
Table 8.3-21	Deleted by Amendment 71. Data is in Figure 8.3-49
Table 8.3-22	Deleted by Amendment 71. Data is in Figure 8.3-50
Table 8.3-23	Deleted by Amendment 75
Table 8.3-24	Deleted by Amendment 75
Table 8.3-25	Deleted by Amendment 75
Table 8.3-26	Deleted by Amendment 75
Table 8.3-27	Vital 125v D.c. Battery Loss Concurrent With Loss of Offsite Power
Table 8.3-28	Major Electrical Equipment That Could Become Submerged Following A Loca

LIST OF TABLES

Section	Title

THIS PAGE INTENTIONALLY BLANK

LIST OF FIGURES

Section	Title
Figure 8.1-1	SERC MT-2 TVA Transmission System
Figure 8.1-2	General Units 1 & 2 Key Diagram Station Aux. Power System
Figure 8.1-2a	Gneral Units 1 & 2 Key Diagram Station Aux. Power System
Figure 8.1-2b	GeneralTransformer Taps & Voltage Limits Aux. Power Sys.
Figure 8.1-3	Additional Diesel Gen Bldg Units 1 & 2 Key Diagram 120V A.C. and 125V D.C. Vital Plant Control Power System
Figure 8.1-4	Deleted by Amendment 75
Figure 8.1-5	Deleted by Amendment 75
Figure 8.1-6	Deleted by Amendment 75
Figure 8.1-7	Deleted by Amendment 75
Figure 8.1-8	Deleted by Amendment 75
Figure 8.1-9	Deleted by Amendment 75
Figure 8.1-10	Deleted by Amendment 75
Figure 8.1-11	Deleted by Amendment 75
Figure 8.1-12	Deleted by Amendment 75
Figure 8.1-13	Deleted by Amendment 75
Figure 8.1-14	Deleted by Amendment 75
Figure 8.1-15	Deleted by Amendment 75
Figure 8.1-16	Deleted by Amendment 75
Figure 8.1-17	Deleted by Amendment 75
Figure 8.2-1	Powerhouse Units 1 and 2 Wiring Diagram Development Single Line
Figure 8.2-1a	Hydro and Steam Power Stations Wiring Diagrams Development Single Line
Figure 8.2-1b	Control Buildtng Switchboards 250V D.C. Battery Boards
Figure 8.2-1c	Wiring Diagrams D.C. Battery Circuits Single Line
Figure 8.2-2	Tennessee Valley Authority Transmission Planning Department 500 And 161kv Transmission Arrangement
Figure 8.2-3	Switchyard Electrical Equipment General Arrangement Plan
Figure 8.2-4	Switchyard Electrical Equipment General Arrangement Plan
Figure 8.2-5	Powerhouse Units 1 & 2 Electrical Equipment Com & Unit Sta. Serv. & RCP 6900v Buses (Sheet 2)
Figure 8.2-5a	15kV, 2000A, 3P, 3W Tube Type Duct Layout, Cross-Section, Flanges, SWGR & SFMR Termin
Figure 8.2-6	Powerhouse Units 1 and 2 Electrical Equipment Com & Unit Sta. Servo and RCP 6900V Buses (sheet 1)
Figure 8.2-6a	500kV Transformer Yard Conduit and Grounding Com SWGR C&D CND BK Plan and Details
Figure 8.2-6b	Powerhouse Turbine Building - Unit 2 Conduit and Grounding Cable Trays -EL. 728.0 Plan and Details
Figure 8.2-6c	Powerhouse Auxiliary Building - Unit 1 Conduit and Grounding EL. 757.0 Details
Figure 8.2-6d	Powerhouse Auxiliary Building - Unit 1 Conduit and Grounding EL. 757.0 Details
Figure 8.2-7	Control Building Units 1 and 2 Electrical Equipment

LIST OF FIGURES

Section	Title
	Electrical Control Area Plan - EL. 755.0
Figure 8.2-8	Deleted by Amendment 90
Figure 8.2-8a	Deleted by Amendment 90 (Sheets 1 thru 12)
Figure 8.2-9	Deleted by Amendment 90
Figure 8.2-10	Deleted by Amendment 90
Figure 8.2-11	Control Building Units 1 and 2 Electrical Equipment Battery and D.C. Eqpt. Room Plans. Sections and Details
Figure 8.2-12	Powerhouse Units 1 & 2 Wiring Diagram, 250-Volt Battery System, Single Line (sheet 1)
Figure 8.2-13	Powerhouse Units 1 and 2 Wiring Diagrams 250 Volt Battery System Single Line
Figure 8.3-1	Diesel Generator Building Equipment Plans and Sections
Figure 8.3-1a	Additional Diesel Generator Building Equipment Plans and Sections
Figure 8.3-2	Control, Auxiliary. and Reactor Bldg. Units I and 2 Electrical Equipment General Arrangement Plan EL. 729.0 772.0. and Section
Figure 8.3-3	Control and Auxiliary Building Units l and 2. Electrical Equipment Ge:neral Arrangement
Figure 8.3-4	Diesel Generator Building Electrical Equipment 480V Diesel Auxiliary Boards Plans and Sections
Figure 8.3-4b	Additional Diesel Generator Building Electrical Equipment General Arrangement EL. 742.0
Figure 8.3-4c	Additional Diesel Generator Building 6900V Board C-Sand 480V Diesel Aux. Supply Board Outline and General Arrangement
Figure 8.3-5	Powerhouse Units 1 and 2 Wiring Diagrams 6900V Shutdown Power Schematic Diagram
Figure 8.3-5a	Second Level Voltage Protection
Figure 8.3-6	Auxiliary Building Unit 1 Wiring Diagrams 6900V Shutdown Power 1A-A Schematic Diagrams
Figure 8.3-7	Auxiliary Building Unit 1 Wiring Diagrams 6900V Shutdown Power 1A-A Schematic Diagrams
Figure 8.3-8	Auxiliary Building Unit 1 Wiring Diagrams 6900V Shutdown Power 1B-B Schematic Diagrams
Figure 8.3-9	Auxiliary Building Unit 1 Wiring Diagrams 6900V Shutdown Power 1B-B Schematic Diagrams
Figure 8.3-10	Auxiliary Building Units 1 & 2 Wiring Diagrams 6900V Shutdown Power 2A-A Schematic Diagrams
Figure 8.3-11	Auxiliary Building Units 1 & 2Wiring Diagrams 6900V Shutdown Power 2A-A Schematic Diagrams
Figure 8.3-12	Auxiliary Building Units 1 & 2 Wiring Diagrams 6900V Shutdown Power 2B-B Schematic Diagrams
Figure 8.3-13	Auxiliary Building Unit 1 & 2 Wiring Diagrams 6900V Shutdown Power 2B-B Schematic Diagrams
Figure 8.3-14	Deleted by Amendment 88

LIST OF FIGURES

Section	Title
Figure 8.3-14a	Diesel Gen Bldg Units 1 & 2 Wiring Diagrams 6900V Standby Dsl Gen C-S
Figure 8.3-14b	Diesel Gen Bldg Units 1 & 2 Wiring Diagrams 6900V Standby Dsl Gen 1A-A Schematic Diagram
Figure 8.3-14c	Diesel Gen Bldg Units 1 & 2 Wiring Diagrams 6900V Standby Dsl Gen 1B-B Schematic Diagram
Figure 8.3-14d	Diesel Gen Bldg Units 1 & 2 Wiring Diagrams 6900V Standby Dsl Gen 2A-A Schematic Diagram
Figure 8.3-14e	Diesel Gen Bldg Units 1 & 2 Wiring Diagrams 6900V Standby Dsl Gen 2B-B Schematic Diagram
Figure 8.3-15	Auxiliary Building Units 1 & 2 Wiring Diagram 480V Aux Bldg Common BD Single Line
Figure 8.3-16	Auxiliary Building Units 1 & 2 Wiring Diagrams 6900V Shutdown Board 1A-A Single Line
Figure 8.3-17	Auxiliary Building Units 1 & 2 Wiring Diagrams 6900V Shutdown Board 1B-B Single Line
Figure 8.3-18	Auxiliary Building Units 1 & 2 Wiring Diagrams 6900V Shutdown Board 2A-A Single Line
Figure 8.3-19	Auxiliary Building Units 1 & 2 Wiring Diagrams 6900V Shutdown Board 2B-B Single Line
Figure 8.3-20	Auxiliary Bldg Unit 1 Wiring Diagrams 480V Shutdown Bd 1A1-A
Figure 8.3-20a	Auxiliary Building Unit 2 Wiring Diagrams 480V Shutdown Board 2A1-A Single Line
Figure 8.3-21	Auxiliary Building Unit 1 Wiring Diagrams 480V Shutdown Board 1A2-A Single Line
Figure 8.3-21a	Auxiliary Building Unit 2 Wiring Diagrams 480V Shutdown Board 2A2-A Single Line
Figure 8.3-22	Auxiliary Building Unit 1 Wiring Diagrams 480V Shutdown Board 1B1-B Single Line
Figure 8.3-22a	Auxiliary Building Unit 2 Wiring Diagrams 480V Shutdown Board 2B1-B Single Line
Figure 8.3-23	Auxiliary Building Unit 1 Wiring Diagrams 480V Shutdown Board 1B2-B Single Line
Figure 8.3-23a	Auxiliary Building Unit 2 Wiring Diagrams 480V Shutdown Board 2B2-B Single Line
Figure 8.3-24	Diesel Generator Building Unit 1 Wiring Diagrams 6900V Diesel Generator Single Line
Figure 8.3-24a	Additional Diesel Generator Building Units 1 & 2 Wiring Diagrams 6900V Diesel Generator C-S Single Line
Figure 8.3-24b	Powerhouse Units 1 & 2 Wiring Diagrams 6900V DSL Gen BD C-S Single Line Diagrams
Figure 8.3-24c	Additional Diesel Gen Bldg Units 1 & 2 Wiring Diagrams 6900V DSL Gen BD C-S Schematic Diagram
Figure 8.3-24d	Additional Diesel Gen Bldg Units 1 & 2 Wiring Diagrams 6900V DSL

LIST OF FIGURES

Section	Title
	Gen BD C-S Schmatic Diagram
Figure 8.3-25	Deleted by Amendment 88
Figure 8.3-25a	Additional Diesel Gen Bldg Units 1 & 2 Wiring Diagrams Standby DSL Gen BD C-S Schmatic Diagram
Figure 8.3-25b	Diesel Generator Building Unit 1 Wiring Diagram Standby DSL Gen System Schmatic Diagram 1A-A
Figure 8.3-25c	Diesel Generator Building Unit 1 Wiring Diagram Standby DSL Gen System Schmatic Diagram 1B-B
Figure 8.3-25d	Diesel Generator Building Unit 1 Wiring Diagrams Standby Dsl. Gen. Schematic Diagram 2A-A
Figure 8.3-25e	Diesel Generator Building Unit 1 Wiring Diagrams Standby Dsl. Gen. Schematic Diagram 2B-B
Figure 8.3-26	Deleted by Amendment 88
Figure 8.3-26a	Additional Diesel Gen. Bldg. Units l and 2 Wiring Diagrams Standby Diesel Gen. C-S Schematic Diagrams
Figure 8.3-26b	Diesel Generator Building Unit 1 Wiring Diagrams Standby Dsl. Gen. Schematic Diagram (DG lA-A)
Figure 8.3-26c	Diesel Generator Building Unit I Wiring Diagrams Standby Dsl. Gen. Schematic Diagram (DG lB-B)
Figure 8.3-26d	Diesel Generator Building Unit 1 Wiring Diagrams Standby Dsl. Gen. Schematic Diagram (DG 2A-A)
Figure 8.3-26e	Diesel Generator Building Unit 2 Wiring Diagrams 6900V Standby Dsl. Gen. Schematic Diagram (DG 2B-B)
Figure 8.3-27	Deleted by Amendment 88
Figure 8.3-27a	Additional Diesel Gen. Bldg. Units 1 and 2 Wiring Diagrams Standby Diesel Gen. C-S Schematic Diagrams
Figure 8.3-27b	Diesel Generator Building Unit 1 Wiring Diagrams Standby Dsl. Gen. Schematic Diagram (DG lA-A)
Figure 8.3-27c	Diesel Generator Building Unit 1 Wiring Diagrams Standby Ds1. Gen. Schematic Diagram (DG lB-B)
Figure 8.3-27d	Diesel Generator Building Unit 2 Wiring Diagram Standby Dsl. Gen. Schematic Diagram (DG 2A-A)
Figure 8.3-27e	Diesel Generator Building Unit 2 Wiring Diagrams 6900V Standby Dsl. Gen. Schematic Diagram (DG 2B-B)
Figure 8.3-28	Deleted by Amendment 88
Figure 8.3-28a	Additional Diesel Gen. Bldg. Units l and 2 Wiring Diagrams Standby Diesel Gen. C-S Schematic Diagrams
Figure 8.3-28b	Diesel Generator Building Unit 1 Wiring Diagrams 6900V Standby Dsl. Gen. Schematic Diagram (DG lA-A)
Figure 8.3-28c	Diesel Generator Building Unit 1 Wiring Diagrams Standby Dsl. Gen. Schematic Diagram (DG 1B-B)
Figure 8.3-28d	Diesel Generator Building Unit 2 Wiring Diagrams Standby Dsl. Gen. Schematic Diagram (DG 2A-A)
Figure 8.3-28e	Diesel Generator Building Unit 1 Wiring Diagrams Standby Dsl. Gen.

LIST OF FIGURES

Section	Title
	Schematic Diagram (DG 2B-B)
Figure 8.3-29	Deleted by Amendment 88
Figure 8.3-29a	Additional Diesel Gen. Bldg. Units l and 2 Wiring Diagrams Standby Diesel Gen. C-S Schematic Diagrams
Figure 8.3-29b	Diesel Generato:r Building Unit 1 Wiring Diagrams Standby Ds1. Gen. Schematic Diagram DG lA-A
Figure 8.3-29c	Diesel Generator Building Unit 1 Wiring Diagrams Standby Ds1. Gen. Schematic Diagram DG 1B-B
Figure 8.3-29d	Diesel Generator Building Unit 1 Wiring Diagrams 6900V Standby Ds1. Gen. Schematic Diagram DG 2A-A
Figure 8.3-29e	Diesel Generator Building Unit 1 Wiring Diagrams Standby Dsl. Gen. Schematic Diagram DG 2B-B
Figure 8.3-30	Diesel Gen. Bldg. Units 1 and 2 Wiring Diagrams 480V Dsl. Aux. BD lAl-A and 2Al-A Single Lines
Figure 8.3-30a	Additional Diesel Gen. Bldg. Units l and 2 Wiring Diagrams 480V Diesel Aux. BD. Cl-S Single Lines
Figure 8.3-30b	Additional Diesel Gen. Bldg. Units l and 2 Wiring Diagrams 480V Diesel Aux. BD. Cl-S Single Lines
Figure 8.3-31	Diesel Gen. Bldg. Units 1 and 2 Wiring Diagrams 480V Dsl. Aux. BD lA2-A and 2A2-A Single Line
Figure 8.3-31a	Additional Diesel Gen. Bldg. Units 1 and 2 Wiring Diagrams 480V Diesel Aux BD C2-S Single Lines
Figure 8.3-31b	Additional Diesel Gen. Bldg. Units l and 2 Wiring Diagrams 480V Diesel Aux. BD C2-S Single Lines
Figure 8.3-31c	Additional Diesel Gen. Bldg. Units 1 and 2 Wiring Diagrams 480V Diesel Aux. BD C-S Single Line
Figure 8.3-32	Diesel Building Units 1 and 2 Wiring Diagrams Fuel Oil System Schematic Diagram
Figure 8.3-33	Diesel Generator Building Unit 1 Wiring Diagram Standby Dsl. Generator Sys. Schematic Diagram (DG lA-A)
Figure 8.3-33a	Diesel Generator Building Unit 1 Wiring Diagram Standby Dsl. Generator Sys. Schematic Diagram (DG lB-B)
Figure 8.3-33b	Diesel Generator Building Unit 1 Wiring Diagram Standby Dsl Generator Sys Schematic Diagram (DG 2A-A)
Figure 8.3-33c	Diesel Generator Building Unit 1 Wiring Diagram Standby Dsl Generator Sys Schematic Diagram (DG 2B-B)
Figure 8.3-34	Diesel Gen. Bldg. Unit 1 Wiring Diagrams Standby Diesel Generator Sys Schematic Diagram (DG lA-A)
Figure 8.3-34a	Diesel Generator Building Unit 1 Wiring Diagram Standby Dsl. Gen. Sys. Schematic Diagram (OG lB-B)
Figure 8.3-34b	Diesel Generator Building Unit 1 Wiring Diagram Standby Dsl. Gen. Sys. Schematic Diagram (OG 2A-A)
Figure 8.3-34c	Diesel Generator Building Unit 1 Wiring Diagram Standby Dsl. Gen. Sys. Schematic Diagram (DG 2B-B)

LIST OF FIGURES

Section	Title
Figure 8.3-35	Auxiliary and Diesel Gen. Bldg. Units 1 and 2 Wiring Diagrams Essential Raw Cooling Water Sys. Schematic Diagram
Figure 8.3-36	Auxiliary Building Units 1 & 2 Electrical Equipment Battery and DC Eqpt. Rooms Plans, Sections and Details
Figure 8.3-37	Powerhouse Units I and 2 Wiring Diagram l20V A.C. Vital Inst. Pwr. BDS I-I and 2-1 Connection Diagram -Sheet I
Figure 8.3-38	Powerhouse Units 1 and 2 Wiring Diagram 120V AC Vital Inst. Pwr. BDS I-II and 2-11 Connection Diagram -Sheet 2
Figure 8.3-39	Powerhouse Units 1 and 2 Wiring Diagram l20V Vital Inst. Pwr. BDS I-III and 2-111 Connection Diagrar Sheet 3
Figure 8.3-40	Powerhouse Units 1 and 2 Wiring Diagram 120V A.C. Vital Inst. Pwr. BDS I-IV and 2-IV Connection Diagrams
Figure 8.3-41	Deleted by Amendment 75
Figure 8.3-41a	Deleted by Amendment 75
Figure 8.3-41b	Deleted by Amendment 75
Figure 8.3-41c	Deleted by Amendment 75
Figure 8.3-41d	Deleted by Amendment 75
Figure 8.3-41e	Deleted by Amendment 75
Figure 8.3-41f	Deleted by Amendment 75
Figure 8.3-41g	Deleted by Amendment 75
Figure 8.3-41h	Deleted by Amendment 75
Figure 8.3-41i	Deleted by Amendment 75
Figure 8.3-41j	Deleted by Amendment 75
Figure 8.3-42	Deleted by Amendment 55
Figure 8.3-43	Deleted by Amendment 55
Figure 8.3-44	Powerhouse Reactor Building -Unit 1 Conduit and Grounding Floor EL 702.78 Details -Sheet 1
Figure 8.3-45	Powerhouse Reactor Building Unit 2 Conduit and Grounding EL 702.78 Details -Sheet 1
Figure 8.3-46	Diesel Generator Building Electrical Equipment General Arrangement EL. 742.0
Figure 8.3-47	Powerhouse Units 1 and 2 Wiring Diagrams l25V Vital Battery BD I Single Line - Sheet 1
Figure 8.3-48	Powerhouse Units 1 and 2 Wiring Diagrams l25V Vital Battery BD I Single Line - Sheet 2
Figure 8.3-49	Additional Diesel Gen. Bldg. Units 1 and 2 Wiring Diagrams l25V Vital Battery BD III Single Line -Sheet 3
Figure 8.3-50	Powerhouse Units 1 and 2 Wiring Diagrams l25V Vital Battery BD IV Single Line -Sheet 4
Figure 8.3-51	Deleted by Amendment 75
Figure 8.3-52	Deleted by Amendment 75
Figure 8.3-53	Deleted by Amendment 75
Figure 8.3-54	Deleted by Amendment 75
Figure 8.3-55	Schematic Diagram DC Distribution Panel

LIST OF FIGURES

Section	Title
Figure 8.3-56	Powerhouse Units l and 2 Wiring Diagrams BD V Single Line 125V Vital Battery
Figure 8.3-57	Auxiliary Building Units 1 & 2 Electrical Equipment l25V Vital Battery V-EL 772.0
Figure 8.3-58	Switchover Configuration for Additional Diesel Generator 6.9kV Power
Figure 8.3-59	Yard Diesel Generator Building Architectural Plans and Details

LIST OF FIGURES

Section	Title

THIS PAGE INTENTIONALLY BLANK

8.0 ELECTRIC POWER

8.1 INTRODUCTION

8.1.1 Utility Grid and Interconnections

The Tennessee Valley Authority (TVA) is a corporation of the United States Government serving the State of Tennessee and parts of six other States in the southeast on the boundaries of Tennessee. TVA is interconnected with electric power companies to the north, west, south, and east of its service area. As shown in Figure 8.1-1, the TVA grid consists of interconnected hydro plants, fossil-fueled plants, combustion turbine plants, and nuclear plants supplying electric energy over a transmission system consisting of various voltages up to 500 kV.

The Watts Bar Nuclear Plant is located 48 miles northeast of Chattanooga, Tennessee, on the west bank of the Tennessee River. The plant is connected into a strong existing transmission grid supplying large load centers. Both nuclear units are connected into TVA's 500-kV transmission system. One unit is connected with three and the other with two 500-kV transmission lines which are integral parts of the 500-kV transmission grid. Preferred power is supplied from the existing Watts Bar Hydro 161-kV Switchyard over two radial lines located entirely on TVA property. The Watts Bar Hydro 161-kV Switchyard is interconnected with the TVA power system through six 161-kV transmission lines and five hydro generators.

8.1.2 Plant Electrical Power System

The plant electric power system consists of the main generators, the unit station service transformers, the common station service transformers, the diesel generators, the batteries, and the electric distribution system as shown on Figures 8.1-2, 8.1-2a, 8.1-2b, and 8.1-3. Under normal operating conditions, the main generators supply electrical power through isolated-phase buses to the main step-up transformers and through the unit station service transformers (located adjacent to the Turbine Building) to the nonsafety auxiliary power system. Offsite electrical power supplies Class 1E circuits through the 161-kV system via Common Station Service Transformers (CSSTs) C and D. The primaries of the unit station service transformers are connected to the isolated-phase bus at a point between the generator terminals and the low-voltage connection of the main transformers. During normal operation, station auxiliary power is taken from the main generator through the unit station service transformers and from the 161-kV system through the common station service transformers. During startup and shutdown, all auxiliary power is supplied from the 161-kV system through CSSTs A, B, C and D. The standby (onsite) power is supplied by four diesel generators. An additional diesel generator unit (ADGU, not required for Unit 1 operation) has been provided (equivalent to the existing diesel generators) to replace any one of the four existing diesel generator units.

The safety objective for the power system is to furnish adequate electric power to ensure that safety related loads function in conformance with design criteria and

design bases. Major loads on the electric power system having assigned safety related functions are shown in Table 8.1-1.

The safety objective has been accomplished by: (1) establishing design criteria and bases that conform to regulatory documents and accepted design practice, and (2) implementation of these criteria and bases in a manner that assures a system design and a constructed plant which satisfies all safety requirements. The applicable documents governing the design are shown in Section 8.1.5.

Figures 8.1-2 and 8.I-2A depict the plant distribution system that receives ac power from:

(a) The two nuclear power units.

(b) The two independent preferred (offsite) power circuits, which have access to the TVA transmission network, and in turn have multiple interties with other transmission networks.

(c) The four 4400-kW diesel generator standby (onsite) power sources.

(d) The 4400-kW additional diesel generator unit, which may be used as a replacement for any one of the four existing diesel generators. (Not required for Unit 1 operation.)

The power received from the above sources is distributed to both safety related and non-safety related loads in the plant.

The safety related loads are arranged electrically into four power trains, two for each nuclear unit. Power trains 1A and 2A comprise load group A. Power trains 1B and 2B comprise load group B. Two diesel generators and one load group can provide all safety related functions to mitigate a LOCA in one unit and safely shutdown the other unit. Each power train of each unit has access to a diesel generator (standby source) and each of the two preferred offsite sources.

Figure 8.1-3 depicts the vital ac and dc control power distribution systems that connect four 125V batteries, four battery chargers and eight 120V ac uninterruptable power systems (UPS) with their respective safety related loads and non safety related loads. The 125V dc distribution system is a safety related system which receives power from four independent battery chargers and four 125V dc batteries and distributes it to safety related loads and non-safety related loads of both units. The 120V ac distribution system receives power from eight independent UPSs and distributes it to the safety related loads of both units. These systems are described in Sections 8.2 and 8.3.

8.1.3 Safety-Related Loads

Major loads requiring electric power to perform their safety related function are listed in Table 8.1-1.

8.1.4 Design Bases

The design bases for the electric power system are listed below.

Offsite (Preferred) Power System

(1) Each of the two offsite power circuits has sufficient capacity, is continuously energized, and is available to supply the plant safety loads following a loss of coolant accident (LOCA) to assure that core cooling, containment integrity, and other vital safety functions are maintained.

(2) The two offsite power circuits are designed to be physically independent so as to minimize the likelihood of their simultaneous failure under operating and postulated accident and environmental conditions. The two offsite power circuits do share the Watts Bar Hydro 161kV switchyard which is permitted by GDC 17.

Onsite (Standby) Power Systems

(1) The onsite power systems are designed to provide sufficient capacity to assure that acceptable fuel design limits and design conditions of the reactor coolant pressure boundary are not exceeded as a result of anticipated operational occurrences. Further, these systems provide sufficient capacity to ensure that the core is cooled and containment integrity and other vital functions are maintained in the event of postulated accidents in one unit and to safely shutdown the other unit.

(2) The onsite power systems are capable of performing their safety functions assuming a single failure.

(3) The onsite power systems are located within Category I structures so that they are protected from natural phenomena.

(4) The onsite power systems are designed to perform their safety function considering the effects of the following events:

(a) Postulated accident environment

(b) fires

(c) accident-generated missiles

(d) fire protection system operation

(e) accident-generated flooding, sprays, or jets

(f) single act, event, component, failure, or circuit fault that could cause multiple equipment malfunctions.

(g) Loss of all offsite power or loss of all offsite power concurrent with a LOCA.

(5) The onsite power systems are designed to permit appropriate surveillance, periodic inspections, and testing of important areas and features to assess the continuity of the systems and the condition of their component.

(6) The onsite standby ac power sources are designed to be automatically initiated in the event of an accident signal or a loss of offsite power.

(7) The vital batteries have adequate capacity for a period of 30 minutes, without chargers, to provide the necessary dc power to perform the required safety functions in the event of a postulated accident in one unit and to safely shutdown the other unit, assuming a single failure.

(8) The vital batteries have adequate capacity for a period of two hours, without chargers, to provide the necessary dc power to maintain both reactors at hot shutdown, assuming the loss of all ac power sources.

(9) The vital battery chargers have adequate capacity to simultaneously supply the combined demands of the steady-state loads and to restore the battery from the design discharge state to the design charged state within an acceptable time interval irrespective of status of plant during which the demands occur.

8.1.5 Design Criteria and Standards

Although the design of the electric power system for the Watts Bar Nuclear Plant preceded the publication of several of the standards and regulatory guides referenced below, the design meets the intent of those standards and guides.

8.1.5.1 Design Criteria

(1) IEEE Std 279-1971, IEEE Standard Criteria for Protection Systems for Nuclear Power Generating Stations.

(2) IEEE Std 308-1971, IEEE Standard Criteria for Class 1E Electric Systems for Nuclear Power Generating Stations.

(3) Criterion Nos. 1, 2, 3, 4, 5, 17, and 18, AEC General Design Criteria for Nuclear Power Plants (1O CFR 50, Appendix A, July 7, 1971).

(4) AEC Quality Assurance Criteria for Nuclear Power Plants (10 CFR 50, Appendix B, June 26, 1971).

8.1.5.2 Other Standards and Guides

(1) IEEE Std. 317-1976, IEEE Standard for Electrical Penetration Assemblies in Containment Structures for Nuclear Fueled Power Generating Stations.

(2) ANSI C84.1-1970, Voltage Ratings for Electric Power Systems and Equipment (60 Hz)

(3) Deleted by Amendment 75

(4) IPCEA P-46-426, Power Cable Ampacities, Vol 1 - Copper Conductors.

(5) ANSI C37.1-1962, Relays Associated with Power Switchgear.

(6) ANSI Standards for Power Circuit Breakers.

(a) ANSI C37.4-1953, Alternating-Current Power Circuit Breakers.

(b) ANSI C37.5-1969, Methods for Determining Values of a Sinusoidal Current Wave, Normal-Frequency Recovery voltage, and a Guide for

Calculation of Fault Currents for Application of AC High-Voltage Circuit Breakers Rated on Total Current Basis.

(c) ANSI C37.6-1971, Schedules of Preferred Ratings for AC High-Voltage Circuit Breakers Rated on a Total Current Basis.

(d) ANSI C37.7-1960, Interrupting Rating Factors for Reclosing Service Power Circuit Breakers.

(e) ANSI C37.8-1952, Rated Control Voltages and Their Ranges for Power Circuit Breakers.

(f) ANSI C37.9-1953, Test Code for Power Circuit Breakers

(g) ANSI C37.11-1972, Requirements for Electrical Control for AC High-Voltage Breakers Rated on a Symmetrical Current Basis.

(h) ANSI C37.12-1969, Guide Specifications for AC Power Circuit Breakers.

(i) ANSI C37.03-1964, Definitions for AC High-Voltage Circuit Breakers.

(j) ANSI C37.10-1964, Application Guide for AC High-Voltage Circuit Breakers.

(k) ANSI C37.13-1963 (R1969), Low-Voltage AC Power Circuit Breakers.

(7) ANSI C37.19-1963, Low-Voltage a.c. Power Circuit Breakers and Switchgear Assemblies.

(8) ANSI C37.20-1969 (C37.20-1974*), Switchgear Assemblies and Metal-Enclosed Bus.

(9) ANSI C57, Transformers, Regulators, and Reactors.

(10) NEMA AB-1-1964 (AB1-1975*), Molded-Case Circuit Breakers

(11) NEMA EI-2-1966, Instrument Transformers

(12) NEMA SG3-1965, Low-Voltage Power Circuit Breakers

(13) NEMA SG4-1965, High-Voltage Power Circuit Breakers

(14) NEMA SG5-1967, Power Switchgear Assemblies

(15) NEMA SG6-1960, Power Switching Equipment

(16) NEMA TR1-1971, Transformers, Regulators, and Reactors

(17) NEMA MG1-1967, Motors and Generators

(18) Deleted by Amendment 67

(19) ICEA S-61-402, NEMA WC5 Thermoplastic-Insulated Wire and Cable for the Transmission and Distribution of Electrical Energy[1,2]

(20) IPCEA S-56-434, Polyethylene-Insulated Thermoplastic-Jacketed Communication Cables

(21) ICEA S-66-524, NEMA WC7 Cross-linked-Thermosetting-Polyethylene Insulated Wire and Cable for the Transmission and Distribution of Electrical Energy[1,2]

(22) NFPA No. 78-1971, Lightning Protection Code

(23) ICEA S-19-81, NEMA WC3 Rubber-Insulated Wire and Cable for the Transmission and Distribution of Electrical Energy. Specific references herein are from the fifth edition dated July 1969[1,2].

(24) IPCEA S-28-357, NEMA WC1-1963, American National Standards Institute Requirements for Asbestos, Asbestos-Varnished Cloth, and Asbestos-Thermoplastic Insulated Wires and Cable (C8.36-1962)[1,2].

(25) ICEA S-68-516, NEMA WC8-1976, Ethylene-Propylene-Rubber-Insulated Wire and Cable for the Transmission and Distribution of Electrical Energy.[1,2]

(26) NRC IE Circular No. 81-13, "Torque Switch Electrical Bypass Circuit for Safeguard Service Valve Motors."

*Revision of standard applies to fifth vital battery system.

Requirements reflected in this IE Circular are implemented within the Watts Bar design by wiring the control circuits in all active valves as follows:

(1) The opening torque switch will be removed from the control circuit by removing connecting wires from the torque switch or by installation of a permanent electrical bypass.

(2) The closing torque switch on all position-seated valves will be removed from the control circuit by removing the connecting wires from the torque switch or by installing a permanent electrical bypass.

(3) The closing torque switch on all torque-seated valves will be bypassed during travel by a position limit switch, allowing the torque switch to open the control circuit only on seating. (The list of the active motor-operated valves which require torque switch bypass is identified in WBN calculation, "Selection Criteria for MOVs Requiring Thermal Overload Bypass," WBN-OSG4-095).

(27) ICEA P-54-440, Ampacities Cables in Open-Top Cable Trays, and National Electrical Code, NFPA-70-1987 (See Electrical Design Standard DS-E12.6.3)

(28) ANSI C37.40-1969, "IEEE Standard Service Conditions and Definitions for High-Voltage Fuses, Distribution Enclosed Single-Pole Air Switches, Fuse Disconnecting Switches, and Accessories."

(29) ANSI C37.90-1972, "Relays and Relay Systems Associated with Electric Power Apparatus."

8.1.5.3 Compliance to Regulatory Guides and IEEE Standards

The extent to which the recommendations of the applicable NRC regulatory guides the IEEE standards are followed for electrical power systems are shown below. The symbol (F) indicates full compliance. Those which require further clarification or are not fully implemented are discussed in the footnotes as indicated.

Regulatory Guide 1.6 (Safety Guide 6), Revision 0 "Independence Between Redundant Standby (Onsite Power Sources and Between Their Distribution Systems." (F)

Regulatory Guide 1.9, Revision 3, "Selection, Design, Qualification, and Testing of Emergency Diesel Generator Units used as Class 1E Onsite Electrical Power Systems at Nuclear Power Plants." (7)

Regulatory Guide 1.22 (Safety Guide 22), Revision 0, "Periodic Testing of Protection System Actuation Functions." (F) [Note 2 of Table 7.1-1]

Regulatory Guide 1.29, Revision 0, "Seismic Design Classification." (F)

Regulatory Guide 1.30 (Safety Guide 30), Revision 0, "Quality Assurance Requirements for the Installation, Inspection and Testing of Instrumentation and Electric Equipment." (See Chapter 17, Section 17.1)

Regulatory Guide 1.32 (Safety Guide 32), Revision 0, "Use of IEEE Std 308-1971," "Criteria for Class 1E Electric Systems for Nuclear Power Generating Stations." (F)

Regulatory Guide 1.40, Revision 0, "Qualification Tests of Continuous Duty Motors Installed Inside the Containment of Water-Cooled Nuclear Power Plants." (F)

Regulatory Guide 1.41, Revision 0, "Preoperational Testing of Redundant Onsite Electric Power Systems to Verify Proper Load Group Assignments." (F)

Regulatory Guide 1.47, Revision 0, "Bypassed and Inoperable Status Indication for Nuclear Power Plant Safety Systems." (F) (10)

Regulatory Guide 1.53, Revision 0, "Application of the Single-Failure Criterion to Nuclear Power Plant Protection Systems." (F) [Note 3 of Table 7.1-1]

Regulatory Guide 1.62, Revision 0, "Manual initiation of Protective Actions. (F)

Regulatory Guide 1.63, Revision 2, "Electric Penetration Assemblies in Containment Structures for Water-Cooled Nuclear Power Plants." (F) (1)

Regulatory Guide 1.73, Revision 0, "Qualification Tests of Electric Valve Operators Installed Inside the Containment of Nuclear Power Plants." (F)

Regulatory Guide 1.75, Revision 0, "Physical Independence of Electric Systems." (2)

Regulatory Guide 1.81, "Shared Emergency and Shutdown Electric Systems for Multi-Unit Nuclear Power Plants." (3)

Regulatory Guide 1.89, Revision 1, "Environmental Qualification of Certain Electrical Equipment Important to Safety for Nuclear Power Plants." (4) (Only applicable to equipment within the scope of 10 CFR 50.49)

Regulatory Guide 1.93, Revision 0, "Availability of Electric Power Sources. (F)

Regulatory Guide 1.100, Revision 0, "Seismic Qualification of Electric Equipment for Nuclear Power Plants." (5)

Regulatory Guide 1.106, Rev. 1, "Thermal Overload Protection for Electric Motors on Motor Operated Valves." (11)

Regulatory Guide 1.108, withdrawn by NRC - August 1993.

Regulatory Guide 1.118, Rev. 2, "Periodic Testing of the Electric Power and Protection Systems." (8), (See Section 7.1, Table 7.1-1, Note 11 for I&C systems)

IEEE Trial-Use Std 338-1971, "Criteria for the Periodic Testing of Nuclear Power Generating Station Protection Systems." (F)

IEEE Std 344-1971, "Guide for Seismic Qualification of Class 1E Equipment for Nuclear Power Generating Stations." (F)

IEEE Std 387-1984, "Criteria for Diesel Generator Units Applied as Standby Power Supplies for Nuclear Power Stations." (See Appendix 8D).

IEEE 450-1980, "IEEE Recommended Practice for Maintenance, Testing, and Replacement of Large Lead Storage Batteries for Generating Stations and Substations." (F)

IEEE Std. 484-1975, "IEEE Recommended Practice for Installation Design and Installation of Large Lead Storage Batteries for Generating Stations and Substations." (9)

IEEE Std. 485-1978, "IEEE Recommended Practice for Sizing Large Lead

Storage Batteries for Generating Stations and Substations." (9)

IEEE Std. 535-1979, "IEEE Standard for Qualification of Class 1E Lead Storage Batteries for Nuclear Power Generating Stations." (9)

Notes:

(1) RG-1.63

(C.1) Full Compliance: The electric penetrations have been designed to maintain mechanical integrity for the maximum short circuit current that could occur and the time duration required for the backup protective device to operate. A redundant overcurrent protection system is provided for all penetrations except instrumentation circuits where fault current is not a problem.

The only 6.9kV circuit feeding loads inside the containment are for the reactor coolant pumps (RCP). The breaker used for control of the RCPs is backed up by a second breaker to provide the redundant overcurrent protection system required by RG 1.63. The breakers are each provided with independent dc control power from different batteries so that failure of either battery will not violate the single failure criteria. Provisions for testing are described below.

The 480V load center circuits have a low voltage power circuit breaker backed up by a current limiting fuse. The penetration withstands the available fault current vs. time duration for the load center breaker and fuse. The breakers have direct acting trips and are independent of control power. The fuse is located in the cable termination compartment of the load center bolted to the breaker cable terminal.

The 480V motor control center (MCC)-circuits have a molded case circuit breaker backed up by a fuse. The penetration withstands the available fault current vs. time duration for the breaker and fuse. Molded case breakers have direct acting trips. The breaker-fuse combination was furnished in the standard design of the MCC and are located in the same compartment with approximately one inch of air space separation. This is considered adequate because of the diverse principle of operation of the fuse and breaker.

Low voltage control circuits have a molded case breaker backed up by a fuse or a fuse backed up by a fuse. The penetration withstands the available fault current vs. time duration for the breaker and fuse. The molded case breakers have direct acting trips.

The energy levels in the instrument systems are sufficiently low so that no damage can occur to the containment penetration.

Table 8.1-2 lists the parameters that show the capability of each typical penetration to withstand without loss of mechanical integrity, the maximum fault current vs. time condition that could occur as a result of a single random failure of the primary overload protection. Thus, the single failure criterion of IEEE 279 is met.

In addition to the single failure criterion of IEEE 279, the following requirements of IEEE Std. 279 are met as follows:

Testability: The overcurrent protection system provided for 6900V penetration circuits include drawn out-type relays which are field testable using manufacturer provided test sets or TVA test sets to simulate fault currents following established procedures. Low voltage power circuit breakers and molded case circuit breakers are field tested using test sets built by Multiamp Corporation or equal. Testing is done by simulating fault current following established procedures.

Periodic resistance measurement is not practical for containment penetration conductor overcurrent protection fuses. Resistance verification is performed as one of the final steps in the manufacturing process, assuring proper construction and rating. Manufacturers do not publish this baseline data since construction changes are made based on design and material improvements. Because of this, no baseline data would be available if periodic resistance measurements were performed. Routine removal of fuses for testing is not prudent according to the manufacturer. Routine removal can result in damaging of the fuse holder and contact points. Fuse manufacturers have also stated that the protective characteristics of fuses do not deteriorate with service life. Service temperatures above the rated temperature, current surges, and unusual cycling conditions reduce the fuses' service life, i.e., the fuse becomes more protective. Under no conditions will a fuse become less protective during its service life. In lieu of field testing by resistance, we will establish a fuse inspection and maintenance program that will ensure: (1) that the proper size fuse is installed, (2) that the fuse shows no sign of deterioration, and (3) that the fuse connections are tight and clean. (See IEEE Std 242-1975, Recommended Practice for Protection and Coordination of Industrial and Commercial Power Systems). Should a problem arise with a specific brand or model of fuse, necessary corrective action would be initiated through the plant's experience review program.

Penetration protective devices in 480V circuits energized during plant operation are mounted in either motor control centers, Class 1E low voltage switchgear, or panel boards. Both Class 1E and non-Class 1E motor control centers are ITE Imperial Corporation series 5600 supplied under the same contract. All 480V non-Class 1E distribution equipment that houses penetration protective devices are located in the same seismic structure as Class 1E distribution equipment. Equipment bought to Class 1E standards is qualified to operate both during and after an

operating basis earthquake (OBE) or a safe shutdown earthquake (SSE) The non-Class 1E motor control centers supplied under the same contract as Class 1E are manufactured using the same materials and components which results in the same high degree of operational reliability during an OBE.

(C.2) Full Compliance: X/R ratios in excess of 15 were used in the qualification tests.

(C.3) Full Compliance: The duration times used in the qualification tests exceeded those required by IEEE Std. 317-1976 and RG 1.63.

(C.4) Full Compliance: The basic impulse test voltage used in qualification test for the medium voltage penetration was 2 x 50 micro-second test. The test consisted of a full wave test series of three positive and three negative waves.

(C.5) Full Compliance: Aging tests in excess of 5000 hours have been run on all non-metallic materials to establish Arrhenius curves.

(C.6) N/A

(C.7) N/A

Electrical equipment inside containment which is not required when the unit is shutdown will be deenergized. Surveillance instructions require the disconnect device to be periodically inspected.

(2) Regulatory Guide 1.75 was issued after the Watts Bar design was complete. Separations criteria for WBNP are given in Section 8.3.1.4.2.

(3) Regulatory Guide 1.81 RI

(1) The design of the WBNP 125-volt vital dc system and the construction permit application were made before June 1, 1973. The design, as a minimum, meets the requirements of position 3 of the subject regulatory guide as follows: The system is capable of supplying minimum ESF loads and the loads required for attaining a safe and orderly shutdown of the unit assuming a single failure and loss of offsite power. The ESF output relays and their trained loads that require power to operate, are assigned as follows:

(1) Unit 1 "A" train - 125V dc Vital Battery I, 120V a.c. Vital UPS 1-I .

(2) Unit 1 "B" train - 125V dc Vital Battery II, 120V a.c. Vital UPS 1-II.

(3) Unit 2 "A" train - 125V dc Vital Battery III, 120V a.c. Vital UPS 2-III.

(4) Unit 2 "B" train - 125V dc Vital Battery IV, 120V a.c. Vital UPS 2-IV.

Thus, the ESF loads are not shared.

The 120-volt a.c.vital instrument power is supplied by four UPS units per unit. They furnish power for the four-channel reactor protection system (RPS) input relays. The relays fail safe, (i.e., actuate reactor protection system (RPS) signal, on a loss of power) thus a single failure and/or a loss of offsite power does not prevent the safe and orderly shutdown of either unit.

Some plant common loads are supplied from unit 1, channels I and II and other plant common loads are supplied from unit 2. In no case does the sharing inhibit the safe shutdown of one unit while the other unit is experiencing an accident. All shared systems are sized to carry all credible combinations of normal and accident loads.

RG-1.81

Position C2

(a) Watts Bar is a two-unit plant.

(b) With a single failure (loss of a battery or loss of a diesel generator) in the plant and an assumed loss of offsite power, sufficient ESF loads are still automatically available to the accident unit and to safely shutdown the remaining unit. The shared safety systems are designed so that one load group (Train 1A & 2A or Train 1B & 2B) can mitigate a design basis accident in one unit and accomplish an orderly shutdown of the other unit. For these events, electric motors driving equipment in the shared systems are connected without regard to which unit has initiated the accident signal. Therefore, a spurious accident signal in the nonaccident unit concurrent with an accident in the other unit will not cause a standby power supply (diesel generator or vital battery) to be overloaded.

(c) The most severe DBE is an accident in one unit with a loss of offsite power. Sufficient diesel generator (DG) power is available to attain a safe and orderly shutdown of both units with the loss of one DG unit. Assuming the loss of offsite power and a design basis accident in one unit, one division of ESF equipment can be used to bring the plant to a safe and orderly cold shutdown. Therefore, the safe shutdown could be achieved with the complete failure of a power train in one unit or even with the complete failure of the same power train (-A or-B) in both units.

(d) The DG units and the onsite distribution system are arranged in two redundant trains per unit with one C-S diesel generator that can be manually substituted for any one of the other diesel generator units. Due to the shared ESF system (example: ERCW), only one of the redundant power trains per plant can be taken out for maintenance or tested at a time. If the existing diesel generator unit (EDGU) remains or is expected to remain out of service for longer than the technical specification time limit, the additional diesel generator unit (ADGU) may

be aligned for service and is qualified to serve indefinitely as a replacement for the disabled EDGU. With only one DG unit unavailable, this will ensure power is supplied to enough ESF equipment to safety shutdown both units, assuming the loss of offsite power.

(e) No interface of the unit operators is required to meet Position 2.b. and 2.c.

(f) Control and status indication for the DG units is provided on a central control board (Panel 0-M-26) available to both unit operators. DC system status (volts, current, etc.) is provided on a unit basis.

(g) The recommendation of Regulatory Guide 1.6, 1.9 except as discussed in Note 7, and 1.47 are met.

Position C.3

(h) The construction permit for WBNP was issued before June 1, 1973.

(4) Regulatory Guide 1.89, Revision 1, endorses methodology for equipment qualification in accordance with 10 CFR 50.49. For details of Watts Bar environmental qualification of Class 1E equipment see Reference [1] of Section 3.11.

(5) Regulatory Guide 1.100 Rev. 0 reflects the requirements of IEEE Std. 344-1975. Although Watts Bar Nuclear Plant Class 1E equipment was seismically qualified to IEEE Std. 344-1971, the qualification procedures are consistent with the requirements of IEEE Std. 344-1975.

(6) Deleted by Amendment 86.

(7) Since Regulatory Guide 1.9 has been revised, the following information defines the degree of conformance with Regulatory Guide 1.9 R3 for the design bases listed in Section 8.1.4.

Position C.0	WBN meets the intent of IEEE 387-1984
Position C1.1	Full compliance
Position C1.2	Full compliance
Position C1.3	Does not comply - Revision 2 of RG 1.9 Position C2 required the predicted loads not to exceed the short time rating. This position has required the predicted loads not to exceed the continuous rating. WBN diesel generators load assignment was based on the RG 1.9 R2 limit.
Position C1.4	Full compliance

Position C1.5 Full compliance

Position C1.6 Full compliance

Position C1.7.1 Full compliance

Position C1.7.2 Does not comply - Although a first-out surveillance system is not installed for the DG system at WBN, DG protective trips such as differential overcurrent have been provided with targets to indicate which protective device operated. In addition, the status of protective devices installed to shutdown the DG for generator or engine trouble are alarmed in the MCR. Where more than one protective device function group is operated, the information is fed to the MCR computer/printer which would provide the information as to which device operated first.

Position C1.8 Full compliance

Position C2.2.1 Full compliance

Position C2.2.2 Full compliance

Position C2.2.3 Full compliance

Position C2.2.4 Full compliance

Position C2.2.5 WBN meets the intent of this position. The diesel generators associated with the nuclear unit affected by the SI event are started by 1E circuits. However, the starting of the diesel generators of the non-SI unit is implemented with a non-1E circuit (common start circuit). The intent of this position is to have all the DGs started in case there is a loss of off-site power (LOOP). WBN meets this precautionary requirement with the common start circuit. In the event of a LOOP, the 1E LOOP circuits also start the DGs, independent of the common start circuit.

Position C2.2.6 Does not fully comply. The design basis at WBN is a simultaneous LOOP/LOCA, not LOOP followed by LOCA. Although there are some design features to meet the effects of LOOP followed by LOCA, there is no analysis to demonstrate the design will meet the DG voltage and frequency requirements.

Position C2.2.7 Full compliance

Position C2.2.8 Full compliance

Position C2.2.9 Full compliance

Position C2.2.10 Full compliance

Position C2.2.11 Full compliance

Position C2.2.12 Full compliance

Position C2.2.13 Full compliance

Position C2.2.14 Full compliance

Position C2.3.1 Full compliance with the exceptions identified by C2.2.5 and C2.2.6

Position C2.3.2 Full compliance

Position C3 Full compliance

Position C4 Full compliance

(8) The Watts Bar design complies with all of the positions of Regulatory Guide 1.118, Rev. 2 for electrical power systems except as follows:

Position C.6(a) - Where feasible test switches or other necessary equipment will be installed permanently to minimize the use of temporary jumpers in testing in accordance with the requirements in IEEE Standard 338-1977.

(9) Full compliance for Fifth Vital Battery Only.

(10) WBN is in full compliance with the intent of RG 1.47 (BISI) Rev. 0.

(11) The Watts Bar Design complies with Position C.1(b) of Regulatory Guide 1.106 R1 except as follows:

Position C.1(b) requires bypass of the thermal overload (TOL) contacts of all safety-related motor-operated valves (MOVs) during accident conditions. TVA will bypass the TOL contacts of all active valves (valves required to perform a mechanical function after a safety injection (SI) signal). Since active valves are the only ones required to change position to shutdown the reactor or to mitigate the effects of a design basis event, they are the only MOVs requiring this assurance of position change. (The list of the active motor-operated valves which require TOL bypass are identified in WBN Calculation, "Selection Criteria for MOVs Requiring Thermal Overload Bypass," WBN-OSG4-095.).

REFERENCES

(1) TVA Submittal to NRC "WBN Unit 1 Supplemental Information on WBN Cable Issues" L44900615803 Enclosure 4

(2) TVA Submittal to NRC "WBN Unit 1 Electrical Cable Damage - Assessment & Resolution Plan" L44901011801 Enclosure 1

Table 8.1-1 Safety loads and functions
(Page 1 of 3)

Safety Loads	Function	Power
Charging Pumps	Provide emergency core cooling during emergency shutdown	6900V a.c.
Safety Injection Pumps	Provide emergency core cooling during emergency shutdown	6900V a.c.
Residual Heat Removal Pumps	Remove reactor heat during a shutdown condition	6900V a.c.
Containment Spray Pumps	Provide cooling spray inside containment during high pressure conditions	6900V a.c.
Essential Raw Cooling Water Pumps	Provide cooling water for component cooling system and other miscellaneous systems	6900V a.c.
Auxiliary Feed-water Pumps	Provide water to the steam generators during emergency conditions	6900V a.c.
Pressurizer Heat Group	Provide heat for maintaining adequate pressure in the primary coolant system	480V a.c.
Component Cooling System Pumps	Provide cooling water to the NSSS equipment	480V a.c.
Spent Fuel Cooling Pumps	Cool spent fuel pool	480V a.c.
Fire Pumps	Provide water for fire control and emergency feedwater to steam generators for flood mode operation	480V a.c.

Table 8.1-1 Safety loads and functions
(Page 2 of 3)

Safety Loads	Function	Power
WBNP-75		
Reactor Lower Compartment Cooling Fans	To keep reactor lower compartment temperature within bounds	480V a.c.
Control Rod Drive Mechanism Cooling Fans	To protect control rod drive mechanisms against excessive temperatures	480V a.c.
Containment Air Return Fans	To prevent vacuum conditions in the reactor lower compartment during accident conditions	480V a.c.
Emergency Air Conditioning	Maintains safe air tempera ture in operating areas	480V a.c.
Ventilation System	Controls air temperature and/or source and/or radioactive content prior to, during, and following emergency conditions	480V a.c. & 125V d.c
Vital Battery Chargers	Maintain 125V vital batteries at proper charge level	480V a.c.
Hydrogen Recombiner	Maintain a safe level of hydrogen in the containment	480V a.c.
Motor Control Centers	Provide power for small motors, fans, MOV's, heaters, and small pumps associated with safety-related equipment	480V a.c.
Process Protection System	Monitors process parameters which initiate actuation of reactor trip and engineering safeguards systems	120 VAC
Solid-State Protection System	Prevents reactor from operating in unsafe condition	120V a.c.
Nuclear Instrument System	Monitors reactor power level for reactor control and trip logic	120V a.c.
Auxiliary Relay Racks	Auxiliary relays for process control	120V a.c. & 125V d.c
Power Switchgear	Control power for power switchgear	125V d.c.
Vital Inverter	Supplies power to the vital instrument buses	125V d.c
Reactor Trip Switchgear Control	Trips reactor	125V d.c
Diesel Generator Control	Remote control of diesel generators	125V d.c.
Auxiliary Feed Pump Turbine	Automatic start of auxiliary feed pump turbine	125V d.c.
Emergency Lighting Cabinet	Provides power to emergency lighting panel	125V d.c.
Solenoid Valves	Controls flow through safety related valves (pneumatic valves with solenoid pilots)	125V d.c.

Table 8.1-1 Safety loads and functions
(Page 3 of 3)

Safety Loads	Function	Power
Inadequate Core Cooling Monitor	Monitors reactor vessel level, saturation margin, and incore thermocouple temperatures	120V a.c.
BOP Process Instrumentation	Monitors balance-of-plant process parameters	120V a.c.

Table 8.1-2 Electrical Penetration Assembly Short-Circuit Capability

Rated Volts	Serv Volts	Wire Size	Rated Short Ckt Sym Amp	Rated I^2t (x 10^6)	Tested Short Ckt Sym Amp	Calculated Short Ckt Sym Amp	Primary Device Opening Time Sec	Backup Device Opening Time Sec	Backup Device I^2t (x10^6)
8,000	6,900	750 MCM[1]	45,000	2,910	44,000	30,091	0.098	0.098	88.74
600	480	350 MCM	33,000	633	35,000	32,636	0.01	0.052	55.39
600	208	350 MCM	33,000	633	35,000	<22,000	0.01	0.025	12.1
600	480	250 MCM	32,500	323	33,700	20,471	0.01	0.052	21.79
600	480	2/0	28,000	91.7	28,300	26,346	0.01	0.052	36.09
600	125DC	4 AWG	14,300	8.95	15,000	1,200	0.01	0.01	0.014
600	480	4 AWG	14,300	8.95	15,000	13,078	0.01	0.015	2.57
	125DC	6 AWG	9,040	3.56	9,500	1,200	0.01	0.01	0.014
600	480	8 AWG	5,840	1.39	5,960	5,347	0.01	0.015	0.429
600	125DC, 120VAC	8 AWG	5,840	1.39	5,960	4731	0.010	0.04	0.90
600	120VAC, 125VDC	10 AWG	3,800	0.56	3,900	786	0.010	0.04	0.025
600	120VAC, 125DC, 48VDC, 24VDC, 24VDC, 250VDC	12 AWG	2,360	0.223	2,410	284	0.01	1.4	0.113

(1) Parallel 750 MCM Conductors

THIS PAGE INTENTIONALLY BLANK

[s5]

SECURITY SENSITIVE

Figure 8.1-1 SERC MT-2 TVA Transmission System

[e5]

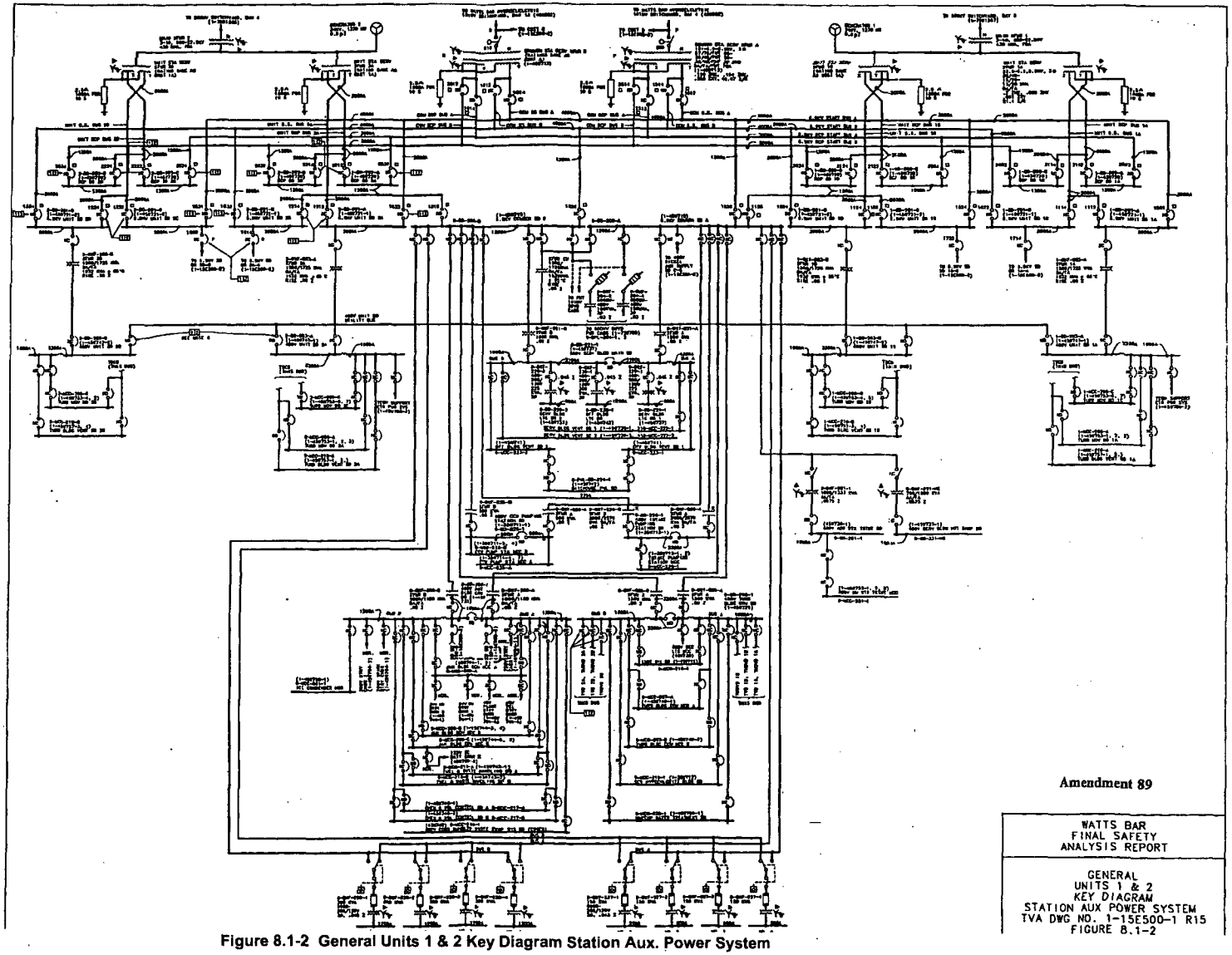

Amendment 89

WATTS BAR
FINAL SAFETY
ANALYSIS REPORT

GENERAL
UNITS 1 & 2
KEY DIAGRAM
STATION AUX POWER SYSTEM
TVA DWG NO. 1-15E500-1 R15
FIGURE 8.1-2

Figure 8.1-2 General Units 1 & 2 Key Diagram Station Aux. Power System

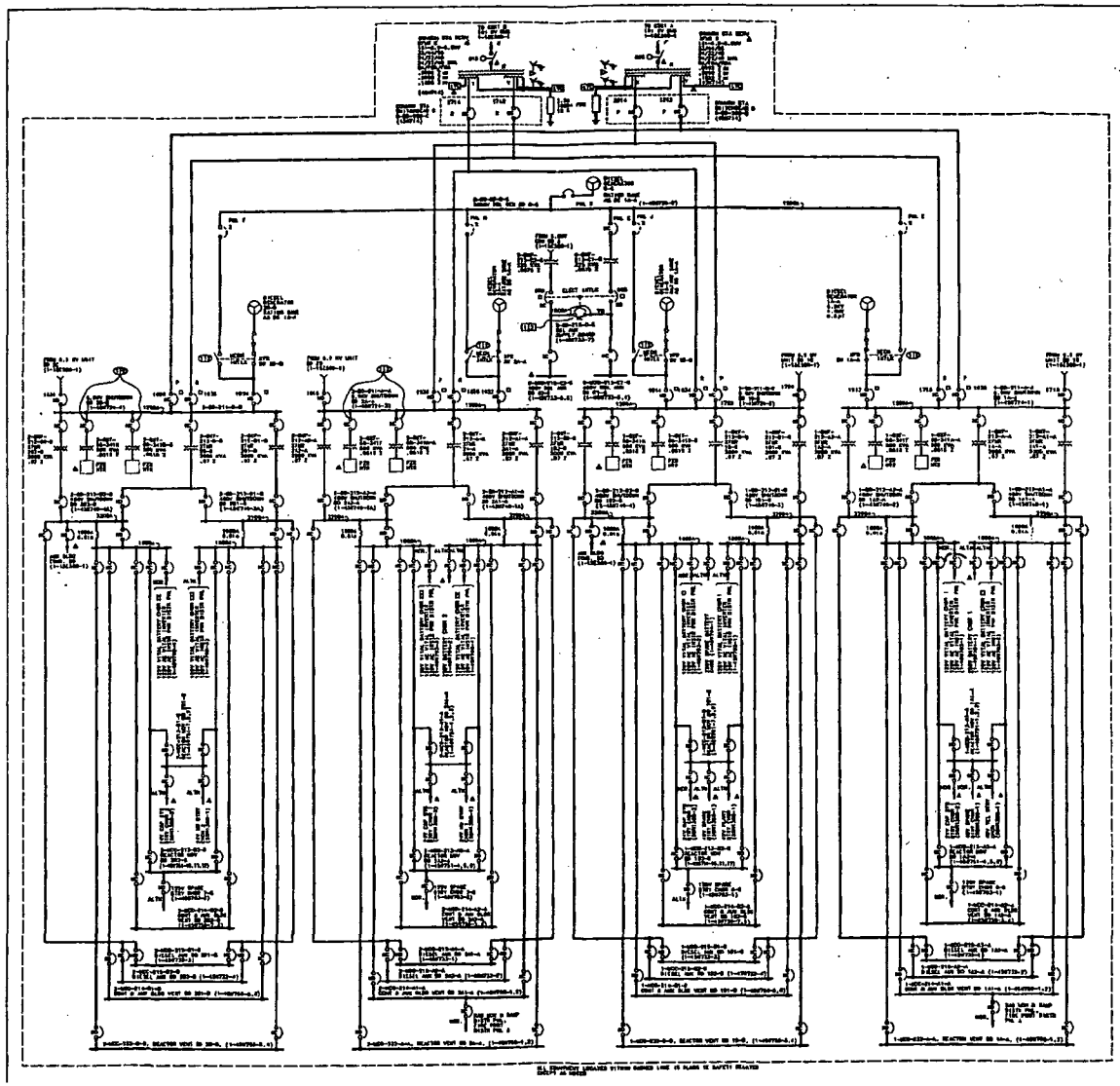

Amendment 89

WATTS BAR
FINAL SAFETY
ANALYSIS REPORT

GENERAL
UNITS 1 & 2
KEY DIAGRAM
STATION AUX POWER SYSTEM
TVA DWG NO. 1-15E500-2 R14
FIGURE 8.1-2a

Figure 8.1-2a Gneral Units 1 & 2 Key Diagram Station Aux. Power System

TABLE 1 - ELECTRIC POWER DISTRIBUTION TRANSFORMERS -VOLTAGE TAP SETTING

TRANSFORMER	SPECIFIED TAP		REMARKS
	PERCENT	TAP POSITION	
TR1A-A	-2.5%	4	SEE NOTE 5
TR1A1-A	-2.5%	4	SEE NOTE 5
TR1A2-A	-2.5%	4	SEE NOTE 5
TR1B-B	-2.5%	4	SEE NOTE 5
TR1B1-B	-2.5%	4	SEE NOTE 5
TR1B2-B	-2.5%	4	SEE NOTE 5
TR2A-A	-2.5%	4	SEE NOTE 5
TR2A1-A	-2.5%	4	SEE NOTE 5
TR2A2-A	-2.5%	4	SEE NOTE 5
TR2B-B	-2.5%	4	SEE NOTE 5
TR2B1-B	-2.5%	4	SEE NOTE 5
TR2B2-B	-2.5%	4	SEE NOTE 5
1-DWF-203-A	-2.5%	4	SEE NOTE 6
1-DWF-203-B	-2.5%	4	SEE NOTE 6
0-DWF-203-CU	-2.5%	4	SEE NOTE 6
2-DWF-203-A	-2.5%	4	SEE NOTE 6
2-DWF-203-B	-2.5%	4	SEE NOTE 6
0-DWF-205-A	-2.5%	4	SEE NOTE 6
0-DWF-205-B	-2.5%	4	SEE NOTE 6
0-DWF-206-A	-2.5%	4	SEE NOTE 6
0-DWF-206-B	-2.5%	4	SEE NOTE 4
0-DWF-211-A	-2.5%	4	SEE NOTE 6
0-DWF-211-B	-2.5%	4	SEE NOTE 6
0-DWF-221-AB	-2.5%	4	SEE NOTE 6
0-DWF-225-A	100%	5	SEE NOTE 6
0-DWF-225-B	100%	5	SEE NOTE 6
0-DWF-226-A	-2.5%	4	SEE NOTE 6
0-DWF-226-B	-2.5%	4	SEE NOTE 6
0-DWF-267-J	-2.5%	4	SEE NOTE 6

TABLE 2 - VOLTAGE LIMITS

EQUIPMENT	MINIMUM VOLTAGE	MAXIMUM VOLTAGE	REMARKS
UNIT GENERATOR	22800	24000	SEE NOTE 4
6.9kV BUS	6560	7250	SEE NOTE 3
6.9kV SHUTDOWN BUS	6560	7250	SEE NOTE 3
480V SHUTDOWN BUS	440	508	SEE NOTE 3

TABLE 3 - OFFSITE POWER SYSTEM VOLTAGE TAP SETTING & VOLTAGE LIMITS

OPERATION MODE	TRANSFORMER	SPECIFIED TAP (HIGH SIDE)		GRID MINIMUM VOLTAGE	GRID MAXIMUM VOLTAGE	REMARKS
		PERCENT	TAP POSITION			
2 UNITS	CSST C & D	UNITY	2	188500	164500	SEE NOTE 5
1 UNIT	CSST C & D	UNITY	2	188500	164500	SEE NOTE 5
2 UNITS SHUTDOWN	CSST C & D	UNITY	2	188500	164500	SEE NOTE 5

TABLE 4 - RELAYS SETTING FOR TRANSFORMER C & D

EQUIPMENT	UPPER LIMIT	NORMAL	LOWER LIMIT	REMARKS
BACKUP VOLTAGE RELAY SETTING	7204	7004	6804	

TABLE 5 - LOAD TAP CHANGER (LTC) SETTING FOR TRANSFORMER C & D

EQUIPMENT	UPPER LIMIT	NORMAL	LOWER LIMIT	REMARKS
NOMINAL SETTING (LTC)	7132	7071	7010	SEE NOTE 6

TABLE 6 - UNIT & COMMON STATION SERVICE TRANSFORMERS -VOLTAGE TAP SETTING

TRANSFORMER	SPECIFIED TAP		REMARKS
	PERCENT	TAP POSITION	
UAST 1A	+2.5%	5	SEE NOTE 6
UAST 1B	+2.5%	5	SEE NOTE 6
UAST 2A	+2.5%	5	SEE NOTE 6
UAST 2B	+2.5%	5	SEE NOTE 6
CSST A	-100%	6	SEE NOTE 6
CSST B	-100%	6	SEE NOTE 6

NOTES:

1. FOR GENERAL NOTES AND REFERENCE DRAWINGS SEE 1SE500-1.
2. BUS VOLTAGE SHOULD BE MAINTAINED WITHIN THE VOLTAGE LIMITS IN TABLES 2 & 3.
3. VOLTAGE BASED ON ANSI STANDARD C84.1-1982, RANGE B, ELECTRIC POWER SYSTEMS AND EQUIPMENT VOLTAGE RATINGS (60 HZ).
4. VOLTAGE BASED ON CALCULATION WBN-EEB-MSTI06-0002.
5. TAP SETTINGS BASED ON CALCULATION WBN-EEB-MSTI06-0010.
6. THE NOMINAL SETTING FOR THE RATIO AND LONGER TIME DELAY OF THE LOAD TAP CHANGER (LTC) IS 9 SECONDS.

8. TAP SETTING IS BASED ON CALCULATION WBN EEB-MS-TI06-0002.

AMENDMENT 75

WATTS BAR
FINAL SAFETY
ANALYSIS REPORT

GENERAL
TRANSFORMER
TAPS & VOLTAGE LIMITS
AUX POWER SYS
TVA DWG NO. 1-15E500-3 R4
FIGURE 8.1-2b

Figure 8.1-2b GeneralTransformer Taps & Voltage Limits Aux. Power Sys.

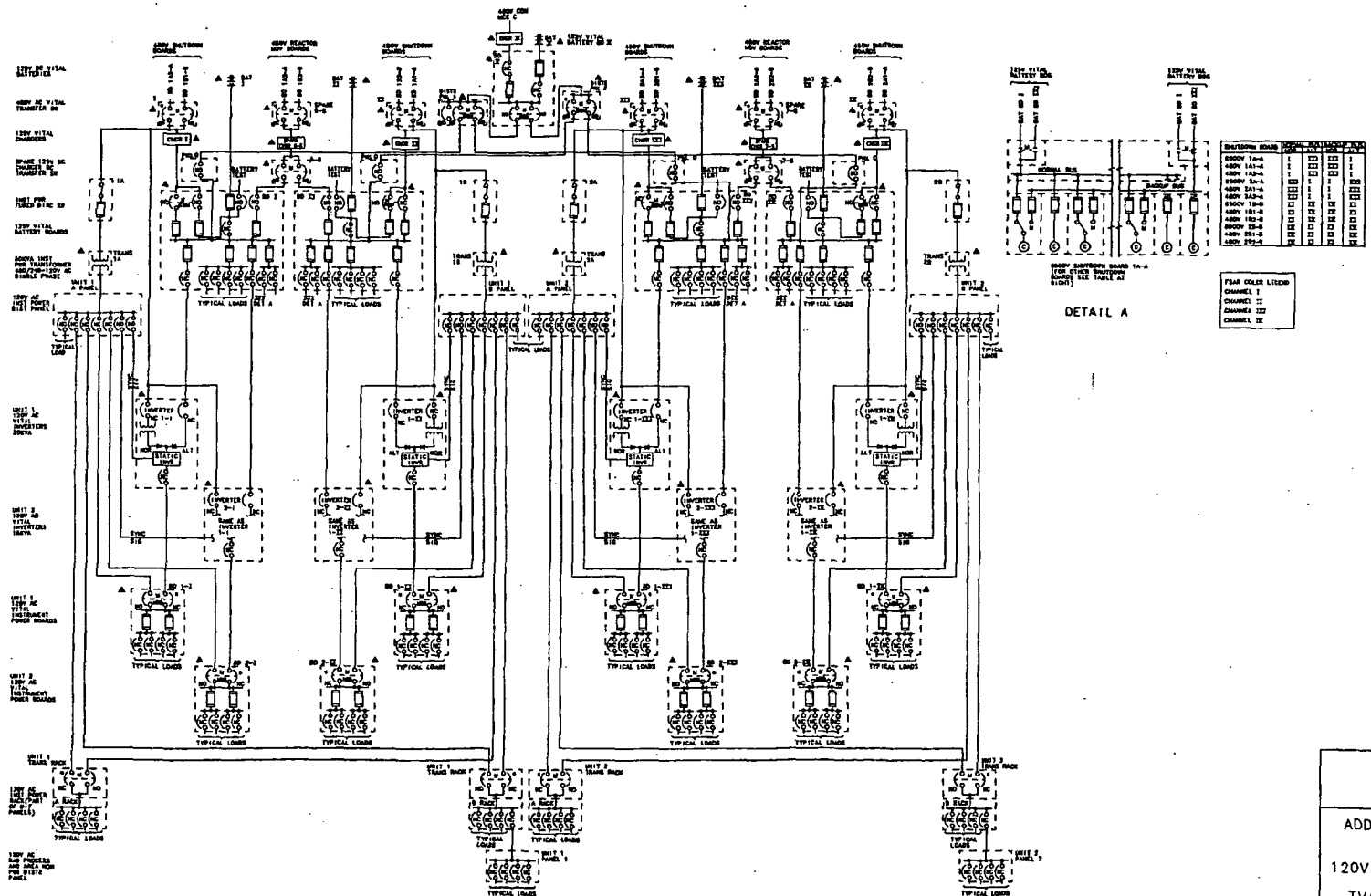

Amendment 89

WATTS BAR
FINAL SAFETY
ANALYSIS REPORT

ADDITIONAL DIESEL GEN BLDG
UNITS 1 & 2
KEY DIAGRAM
120V AC & 125 VDC VITAL PLANT
CONTROL POWER SYSTEM
TVA DWG NO. 1-45W700-1 R9
FIGURE 8.1-3

Figure 8.1-3 Additional Diesel Gen Bldg Units 1 & 2 Key Diagram 120V A.C. and 125V D.C. Vital Plant Control Power System

Figure 8.1-4 Deleted by Amendment 75

Figure 8.1-5 Deleted by Amendment 75

Figure 8.1-6 Deleted by Amendment 75

Figure 8.1-7 Deleted by Amendment 75

Figure 8.1-8 Deleted by Amendment 75

Figure 8.1-9 Deleted by Amendment 75

Figure 8.1-10 Deleted by Amendment 75

Figure 8.1-11 Deleted by Amendment 75

Figure 8.1-12 Deleted by Amendment 75

Figure 8.1-13 Deleted by Amendment 75

Figure 8.1-14 Deleted by Amendment 75

Figure 8.1-15 Deleted by Amendment 75

Figure 8.1-16 Deleted by Amendment 75

Figure 8.1-17 Deleted by Amendment 75

THIS PAGE INTENTIONALLY BLANK

8.2 OFFSITE (PREFERRED) POWER SYSTEM

8.2.1 Description

Preferred offsite power is supplied from TVA's 161-kV transmission grid at Watts Bar Hydro Plant (WBH) switchyard over two separate transmission lines, each connecting to two 161-6.9-kV common station service transformers (CSSTs) at Watts Bar Nuclear Plant (WBN). The Class 1E power system is normally supplied from offsite power through CSSTs C and D. For flexibility, there is also a maintenance feed available from CSSTs A and B to the Class 1E power systems to be used only when both units are in cold shutdown.

The Class 1E power system can be transferred from the offsite normal power supply to the offsite alternate power supply to demonstrate operability of the board transfer. Transfers from the normal supply to the alternate supply may be manual or automatic. Automatic transfers from the normal power supply to the alternate power supply are initiated by any transformer or line failure relays.

Manual (routine) transfers are initiated at the discretion of the operator for test or normal operation. Manual transfers may be effected from the main control room by placing the "auto-manual" transfer switch in manual, then placing the control switch for the selected supply breaker in the "close" position and the control switch for the supply breaker in the "trip" position.

For all unit generator trips except those caused by electrical faults that open the main generator 500-kV circuit breaker, the Balance of Plant (BOP) ac auxiliary power system remains connected to its unit sources for 30 seconds, then fast transfers to offsite power supplied through common transformers A and B. If the unit trip is caused by an electrical fault, the BOP system transfer is not delayed.

Transmission system studies (TSS) have been made that show for an acceptable range of transmission grid conditions, one offsite power circuit consisting of one 161-kV transmission line and transformer C, or the other transmission line and transformer D is capable of starting and running all required safety-related loads, for a design basis accident in Unit 1 and no fuel in Unit 2. The analyses assumed that equipment started by a safety injection signal (SIS) started at the same time unless the load's control circuitry has sequential time delay, that all equipment that is tripped off by a SIS was tripped, and that all continuous loads that could be operating immediately after the SIS, whether safety-related or not, were running. A load shedding feature is provided for part of the BOP loads in the event the 161-kV transmission system experiences system contingencies, but load shedding was not considered in the TSS.

8.2.1.1 Preferred Power Supply

The features of the offsite power system are shown in Figure 8.2-1, Development Single Line Diagram. Preferred power is supplied from the existing Watts Bar Hydro 161-kV switchyard over two 161-kV overhead lines approximately 1.5 miles long,

located entirely on TVA property. These two transmission lines are supported on separate towers, and the separation of the two lines is sufficient to ensure that the failure of any tower in one line will not endanger the other line.

The Watts Bar Hydro 161-kV switchyard bus arrangement is designed so that the loss of any one of the four main bus sections will not cause loss of power to either of the two preferred power source lines to the nuclear plant. The Watts Bar Hydro Plant switchyard is interconnected with the TVA power system through six 161-kV transmission lines and the five Watts Bar hydro generators, as shown on the transmission arrangement, Figure 8.2-2. This switchyard also provides connections to the four inactive steam-driven generators in the Watts Bar Steam Plant.

The Watts Bar-Sequoyah and the Watts Bar-Athens 161-kV lines both terminate on the Hydro plant switchyard bus 1, section 1. These two lines are on separate rights of way except for sharing a common 0.87-mile, double-circuit tower river crossing. The Athens line is approximately 21.78 miles long and terminates in the Athens 161-kV substation along with one 161-kV line from Fort Loudon Hydro Plant, one 161-kV line from Loudon 161-kV substation via the Sweetwater substation, and one line from Charleston 161-kV substation which is tied to Sequoyah Nuclear Plant (SQN). The Sequoyah line is approximately 36.41 miles long and terminates in the 161-kV switchyard at SQN. The Sequoyah 161-kV switchyard is connected to the 500-kV system through an intertie transformer bank, to one of the generating units at SQN, to Chickamauga Hydro Plant, and to other substations which are integral parts of the transmission system with either direct or indirect connections to other TVA steam or hydro electric generating plants.

The Watts Bar-Great Falls 161-kV transmission line is approximately 53.12 miles long. This line is terminated on bus 2, section 2 in the Watts Bar Hydro Plant switchyard. At Great Falls Hydro Plant this line is terminated in the 161-kV switchyard along with a second circuit from Watts Bar Hydro which is routed by way of Spring City 161-kV substation and with 161-kV transmission line that interconnects with the power system network through the Murfreesboro 161-kV substation, McMinnville 161-kV substation, West Cookeville 161-kV substation, and the Center Hill Hydro Plant. The Great Falls and the Winchester 161-kV transmission lines cross 2.87 miles from the Watts Bar Hydro switchyard.

The Watts Bar-Spring City 161-kV transmission line is approximately 7.38 miles long. It is terminated on bus 1, section 3 in the Watts Bar Hydro Plant switchyard. At Spring City this line is terminated on the 161-kV bus along with a 161-kV line that extends to Great Falls Hydro Plant. The Spring City and Winchester lines that extend from Watts Bar Hydro Plant cross 2.74 miles from the switchyard.

The Watts Bar-Rockwood and the Watts Bar-Winchester 161-kV transmission lines are terminated on bus 2, section 4, in the Watts Bar Hydro Plant switchyard. The Rockwood line is approximately 23.67 miles long and is terminated on the Rockwood 161-kV bus along with a 161-kV line from the Crossville 161-kV substation and a 3-terminal line tied to the 161-kV switchyard of the Roane County 500-kV substation and the Kingston Steam Plant. The Crossville 161-kV substation and Kingston Steam

Plant are further connected to the TVA 161-kV transmission system network. The Watts Bar-Rockwood line is on a separate right-of-way except for being on double-circuit towers with the Watts Bar-Winchester line for 0.9 mile and does not cross other lines that terminate at Watts Bar Hydro switchyard. The Watts Bar-Winchester 161-kV transmission line is approximately 76.2 miles long and terminates at Winchester 161-kV substation. The Winchester, Spring City, and Great Falls 161-kV transmission lines have crossings near the Watts Bar Hydro Plant switchyard.

Two 161-kV transmission lines extend approximately 1.5 miles from Watts Bar Hydro Plant switchyard to the Watts Bar Nuclear Plant site to furnish preferred power to the nuclear plant. The transmission line for CSSTs A and D terminates on bus 1, section 1 and bus 2, section 2. This line does not cross other 161-kV lines. The transmission line for CSSTs B and C terminates on bus 2, section 4 and bus 1, section 3 in the hydro plant switchyard. This line crosses over the Spring City and the Great Falls 161-kV transmission lines near the hydro plant switchyard (Figure 8.2-2).

The transmission line structures for 161-kV lines are designed to exceed load requirements specified in the National Bureau of Standards Handbook No. 81 (National Electric Safety Code Part 2). Designing to these requirements ensures the adequacy of lines for wind and heavy icing conditions in excess of those that would be expected to occur in this area. The phase conductor and shield wire design tensions are selected to avoid vibration galloping conductor problems. Long experience with area transmission lines verifies that TVA design practices have been successful in avoiding vibration problems. No galloping conductor conditions have been observed in the eastern portion of the TVA transmission system.

Transmission lines in the 161-kV voltage class have two overhead ground wires provided for lightning protection. This shielding has been effective for an area isokeraunic level of 55 and is reflected in the average operating record of only 3.86 flashover interruptions annually per 100 miles of line. The use of circuit breakers with high speed reclosing relays results in the majority of these interruptions being momentary.

8.2.1.2 Transmission Lines, Switchyard, and Transformers

The two 161-kV and the five 500-kV lines connecting the nuclear plant with the TVA transmission network are indicated functionally on Figure 8.2-1. The onsite transmission line arrangement is shown on Figure 8.2-3 and the offsite transmission line routing in the vicinity of the Hydro Plant switchyard is shown on Figure 8.2-4. Preferred power is supplied from the existing Watts Bar Hydro 161-kV switchyard over two radial 161-kV overhead lines approximately 1.5 miles long. The transmission lines for CSSTs A and D and CSSTs B and C are routed to the east and west of the transformer yard respectively. These lines are routed to minimize the likelihood of their simultaneous failure.

The location of common station service transformers A and B is shown on Figures 8.2-3 and 8.2-5. Physical separation is 61 feet centerline to centerline and 32 feet 9 inches between closest parts. Each transformer has a single primary and two secondary windings. The primary voltage is 161-kV with the winding rated 57/76/95

MVA, OA/FA/FOA (Future). The secondary voltage is 6.9 kV and each winding is rated 36/48/60 MVA, OA/FA/FOA (Future).

The location of common station service transformers C and D is also shown on Figures 8.2-3 and 8.2-6A. Physical separation is 70 feet centerline-to-centerline and 40 feet 9 inches between closest parts. Each transformer has a single primary winding and two secondary windings with automatic load-tap changer units, which will adjust voltage based on the normally connected shutdown board. The primary voltage is 161 kV, and the winding is rated 33/44/55 MVA, OA/FOA/FOA. The secondary voltage is 6.9 kV, and each winding is rated 24/32/40 MVA, OA/FOA/FOA.

Calculated loads for common station service transformers A, B, C and D are well below winding ratings for all conditions.

Fire protection is provided for each common station service transformer by a deluge type water sprinkler system which can be automatically activated by thermostats or the transformer electrical protection devices.

8.2.1.3 Arrangement of the Start Boards, Unit Boards, Common Boards, and Reactor Coolant Pump (RCP) Boards

From the low-voltage side of common station service transformers A and B, 6.9-kV station service buses supply the 6.9-kV common, unit, and RCP boards via the 6.9-kV start boards. The station service (start) buses are outdoor, nonsegregated, partially ventilated, metal-clad structures and are shown on Figure 8.2-5. At the 6.9-kV startboard, these buses enter the outdoor metal-clad switchgear and connect to supply breakers. The design of the 6.9-kV start boards and RCP boards conforms to ANSI, C37.20 (Standard for Switchgear Assemblies including Metal-Enclosed Bus) and is classified as outdoor metal-clad switchgear. Section 20, 6.2.2 of this standard defines the requirements for barriers. The circuit breakers at the 6.9-kV start boards are electrically operated, vertical lift drawout type; with stored energy mechanisms. These circuit breakers have a continuous rating of 3,000 and 3,750 amperes for the RCP Start Bus breakers and Start Buses A and B breakers, respectively , an insulation system for 13.8-kV, interrupting rating of 1,000 MVA, and a momentary rating of 80,000 amperes. The circuit breakers are utilized at 6.9-kV. Therefore, there is sufficient margin between the application and the rating of these circuit breakers.

From the 6.9-kV start board the two 6.9-kV start buses A and B and the two 6.9-kV RCP start buses A and B run on separate support structures as outdoor, nonsegregated, partially ventilated metal-clad assemblies (Figures 8.2-5 and 8.2-6). The bus bars are fully insulated with flame-retardant material, bus supports are flame-retardant, and the metal enclosures are such that arcing faults in one bus will not endanger the other. The 6.9-kV start buses enter the turbine building spaced 8 feet, 6 inches center-to-centerline and continue on this spacing across the building. The 6.9-kV RCP start buses enter the RCP outdoor metal-clad switchgear and connect to supply breakers.

The four unit station service transformers are located in the transformer yard, south of the Turbine Building and directly under the delta section of the main generator isolated-

phase bus. Location of the unit station service transformers is shown on Figures 8.2-5 and 8.2-6. From each of the unit station service transformer low-voltage sides two 6.9-kV buses originate, one running in the switchyard parallel to the south wall of the Turbine Building and connecting to the RCP switchgear, and the other entering the south Turbine Building wall for routing to the unit and common boards. The unit station service buses are outdoor, nonsegregated, partially ventilated, metal-clad construction until they enter the Turbine Building, where the construction changes to indoor type. After entering the Turbine Building, the unit station service buses are routed to the appropriate supply breakers in the 6.9-kV unit and 6.9-kV common boards, entering through the tops of the 6.9-kV unit boards and the bottoms of the 6.9-kV common boards. The 6.9-kV unit and common boards are indoor, metal-clad switchgear with electrically operated, vertical lift drawout breakers with stored energy mechanisms.

CSSTs C and D are connected to 6.9-kV common switchgear C and D via a bus identical to 6.9-kV start buses A and B (Figure 8.2-5A). The 6.9-kV common switchgear C and D are then connected to the 6.9-kV shutdown boards via cables which are routed through conduit banks and cable trays (Figures 8.2-6A and 6B).

All of the indoor station service buses are nonventilated, nonsegregated, metal-clad, drip proof construction. In addition, the outdoor portions are weatherproof and equipped with 120V 1-phase heaters to maintain the temperature inside the housing at least 5°C above outside temperature.

All buses are provided with gas-resistant seals at entry to switchgear. At the penetration of an outside building wall, the buses are provided with a fire-resistant and moisture-resistant barrier.

8.2.1.4 Arrangement of Electrical Control Area (Nuclear Plant)

Figures 8.2-7 and 8.2-11 show the electrical control area where the relay, control, 250V dc control power distribution panels and battery boards are located. Control power for start board power circuit breakers and associated protective relays is distributed from the 250V dc supply via circuit breakers on the turbine building dc distribution boards. Physical isolation of control power supplies is achieved by metal barriers between adjacent panels. Two separate 250V dc buses are provided in these panels. Each bus can be fed from one of the two 250V battery boards (Figures 8.2-12 and 8.2-13) through manual, mechanically interlocked, nonautomatic circuit interrupters. The power circuit breaker and associated relay control circuits are allocated to these two dc buses on the basis of switchyard connections. This allocation of control circuits ensures that the common station service transformer control and relay circuits are fed from two independent dc distribution buses. Each circuit is protected by a circuit breaker and supervised by an amber indicating light located on the recording and instrument board. These indicating lights are grouped on the panel on the basis of the dc buses they are connected to, and their wiring is physically separated on the panel on the same basis.

8.2.1.5 Switchyard Control and Relaying

The design of the offsite (preferred) power system with its provision of two immediate access circuits from the transmission network complies with the NRC regulatory position expressed in Regulatory Guide 1.32 for the preferred design of such a system.

The transmission line relay protection circuits continuously monitor the conditions of the offsite power system and are designed to detect and isolate the faults with maximum speed and minimum disturbance to the system.

The principal features of these schemes are described below. The 161-kv lines are protected by three-zone (reversed third zone) step distance phase relays augmented with directional comparison carrier blocking and have directional overcurrent carrier ground and backup ground relays. The relay potential circuits are fed from a set of potential transformers connected to each main bus section.

The 161-kV transmission line protective relay system provides for fast detection of faults and is designed to maximize the reliability of the incoming power to the plant. Two backup relay systems, namely bus-split and breaker failure relaying schemes, are provided to ensure system stability and availability. For close-in, high-magnitude, multi-phase faults, the bus-split operation is initiated instantaneously to maintain the stability of the generators on the unfaulted bus section. The bus-split operation is also initiated for high magnitude phase-to-ground faults after some time delay. Should the line breakers fail to clear remote line faults, breaker failure relays will isolate the fault by clearing other breakers, including generator breakers tied to the faulted bus section.

Figure 8.2-IA shows a single line diagram of the Watts Bar Hydro Plant switchyard. The switchyard is controlled by operators continuously on duty in the Hydro Plant control room. The control room is located adjacent to the switchyard and houses the controls and relays for the switchyard. In the event of trouble which locks out switchyard breakers (i.e., bus differential, breaker failure, bus-split, etc.) the operator can reset relays and re-establish the switchyard connections, after determining that the fault has been cleared or isolated.

The 161-kV breakers are oil circuit breakers equipped with an accumulator tank charged by a 250-volt dc compressor motor to provide compressed air for the closing operation. Spring energy is used for tripping the breaker. These breakers may be tripped manually at the breaker cabinet, remotely from the control room or automatically by protective relay action.

The Watts Bar Hydro 161-kV switchyard is protected by a bus differential relay scheme. The bus differential relays continuously monitor the current inflow and outflow from the bus section under their supervision. Whenever the current inflow does not equal the current outflow, the relays operate instantaneously to trip and lock out all breakers in their protected bus section.

Each common station service transformer is protected by a percentage differential relay with harmonic restraint, a sudden pressure relay, transformer phase overcurrent relays, and a neutral overcurrent relay in each transformer's common 6.9-kV neutral.

The operation of the transformer protection relays will trip and lock out the power circuit breakers connecting it to the switchyard, trip and lock out associated 6.9-kV circuit breakers, and start a high-pressure sprinkler system to prevent or extinguish any possible fire.

The 161-kV power supply to the common station service transformers possesses a high degree of reliability even under electrical fault conditions. The following discussion describes the sequence of events following postulated faults:

(1) Transmission line fault.

If the instantaneous element of the line protective relays is actuated, the line breaker is tripped and a high speed reclosure occurs. If after the high speed reclosure the fault has not cleared, the breaker will trip again and a standard speed (synchronism check-voltage check) reclosure occurs. In the majority of cases, these reclosures restore the line back to service. However, a trip after this will lock out thebreaker isolating the faulted line. There is no appreciable disturbance on the two feeders to the common station service transformers.

(2) Transmission line fault and failure of the line circuit breaker to clear the fault.

The corresponding breaker failure relay is automatically initiated, starting a timer. If the fault is not cleared within the time setting of the timer all circuit breakers connected to that bus will be tripped and locked out. With normal position of circuit breakers described previously, both offsite power circuits to the nuclear plant continue to receive power without interruption.

(3) Main bus fault.

This type of fault is detected by the bus differential and bus-split relays. When initiated, bus differential relays trip and lock out the circuit breakers connected to the faulted bus. The bus-split scheme is described in postulated fault No. 6 below.

(4) Transformer or transformer feeder faults.

These faults cause tripping of all the transformer circuit breakers on the high and low voltage side of the transformer. In addition, the trip relay initiates the transformer fire protection sprinkler and starts the fire pump. This event results in the loss of two of the four common station service transformers; the other two transformers continue to receive power from the main bus in the hydro switchyard.

(5) Common transformer or transformer feeder fault and failure of one 161-kV circuit breaker to operate properly.

These events cause the operation of protection described under 4 above, followed by the operation of the breaker failure relay which trips all breakers

connected to the bus at the time of failure. The event results in the loss of two of the four transformers; the other two transformers continue to receive power from its main bus in the hydro switchyard.

Automatic transfers of the Class 1E power system from the normal power supply to the alternate power supply only occur when the relay logic is tripping a transmission line and the associated common station service transformers.

(6) Close-in, multi-phase faults.

For close-in, multi-phase faults, the bus splitting relays will operate along with the appropriate aforementioned relay operations. For example, with a close-in, multi-phase, main bus fault, the bus differential relay will operate along with the bus splitting relay. The bus splitting relay scheme consists of a distance element in conjunction with an over-current element. The over-current element determines if the fault is multi-phase and the distance element determines the impedance to the fault. The bus splitting relay trips the four tie breakers (954, 958, 984, 988) between the bus sections at WBH. This will result in the tripping of Unit 3. This will divide the switchyard into two separate bus sections; each section is a source to WBN.

Control power for power circuit breakers and associated protective relays is supplied by two independent 250V batteries and is distributed via circuit breakers on separate panels. Figures 8.2-1B and 8.2-1C show the single line diagrams for the two panels at Watts Bar Hydro Plant.

Two separate 250V dc buses are provided in these panels. Each bus can be fed from one of the two 250V battery boards through manual, mechanically interlocked, nonautomatic circuit interrupters. The power circuit breaker and associated relay control circuits are allocated to these two dc buses on the basis of switchyard connections. This allocation of control circuits ensures that the control and relay circuits of the two nuclear plant lines are fed from two independent dc distribution buses.

8.2.1.6 6.9-kV Start Boards Control and Relaying

6.9-kV Start Buses

The secondaries of common station service transformers A and B feed into two start boards containing four circuit breakers each. Two of the circuit breakers, 1512 and 1614, are the normal and alternate feeders for start bus A while breakers 1612 and 1514 are the normal and alternate feeders for start bus B. Two other breakers, 2512 and 2614, are the normal and alternate feeders for RCP start bus A, and breakers 2612 and 2514 are the normal and alternate feeders for RCP start bus B. The two circuit breakers feeding each start bus from a different common station service transformer are interlocked and the control circuits arranged in such a manner that manually-initiated high-speed (six cycles or less) transfers can be made from either breaker to the other breaker. Automatic transfers can only be made from the normal breaker to

the alternate breaker and are delayed until the bus residual voltage reduces to 30% of nominal. All automatic transfers are initiated by undervoltage on the bus. The 250V dc normal control power for the pair of breakers feeding start bus A is supplied from a separate battery and dc distribution board from that of the normal control power for the two breakers feeding start bus B. Alternate control power feeders are similarly segregated.

Manual control of the circuit breakers is provided on the electrical control board in the Main Control Room where the operator has instrumentation showing the voltage on each of the two buses and current flowing in each of the four CSST secondary windings. The following annunciation is provided:

(1) Start Bus Fan Failure

(2) Start Bus Transfers

(3) Start Bus Failures or Undervoltage

Annunciation No. 3 is composed of bus differential relay operation, bus a.c. voltage failure, and control bus dc voltage failure. Start bus A is the normal feeder to 6.9-kV common board A and the alternate feeder to 6.9-kV unit boards 1A, 1C, 2A, and 2C. Start bus B is the normal feeder to 6.9-kV common board B and the alternate feeder to 6.9-kV unit boards 1B, 1D, 2B, and 2D.

6.9-kV Common Switchgear C and D

The secondaries of common station service transformers C and D feed into 6.9-kV common switchgear C and D (Figures 8.1-2a and 8.1-2b). Each switchgear contains two circuit breakers which are aligned to the common station service transformers as follows:

(1) Common station service transformer C:

This transformer provides normal (offsite) power from the secondary Y winding to 6.9-kV shutdown board 1A-A through circuit breaker 1712 and from the secondary X winding to 6.9-kV shutdown board 2A-A through circuit breaker 2714. In addition, this transformer provides alternate (offsite) power from the secondary X winding to 6.9-kV shutdown board 1B-B through circuit breaker 2714 and from the secondary Y winding to 6.9-kV shutdown board 2B-B through circuit breaker 1712. These feeders are protected by overcurrent and ground overcurrent relays. All of these switchgear circuit breakers are normally closed.

These circuits are designated as R for separation identification.

(2) 2. Common station service transformer D:

This transformer provides normal (offsite) power from the secondary X winding to 6.9-kV shutdown board 1B-B through circuit breaker 2814 and from the secondary Y winding to 6.9-kV shutdown board 2B-B through circuit

breaker 1812. In addition, this transformer provides alternate (offsite) power from the secondary Y winding to 6.9-kV shutdown board 1A-A through circuit breaker 1812 and from the secondary X winding to 6.9-kV shutdown board 2A-A through circuit breaker 2814. These feeders are protected by overcurrent and ground overcurrent relays. All of these switchgear circuit breakers are normally closed.

These circuits are designated as P for separation identification.

All alternate and maintenance feeder circuit breakers located on the 6.9-kV shutdown boards are open during normal plant operation and are utilized only when the normal power supply is not available. The maintenance supplies are only to be used when neither unit is operating (either in cold shutdown or not fueled). All transfers between the normal, alternate and maintenance feeders take place at the 6.9-kV shutdown boards.

6.9-kV Common Station Switchgear C and D Control

The normal control power for circuit breakers 1712 and 2714 is supplied from the existing 125V dc vital battery board I; the normal control power for circuit breakers 1812 and 2814 is supplied from the existing 125V dc vital battery board II. This arrangement provides physically and electrically independent supplies. Control power circuits have been uniquely identified as P and R. P-designated cables are routed in separate raceways from R-designated cables with any exceptions and their justifications documented in the design criteria. The alternate control power for circuit breakers 1712 and 2714 is supplied from existing 125V dc vital battery board III; the alternate control power for circuit breakers 1812 and 2814 is supplied from existing 125V dc vital battery board IV. These cables have been routed such that with either breakers 1712 and 2714 or breakers 1812 and 2814 receiving control power from the designated alternate source (and with the other breaker pair receiving control power from the normal source) physical and electrical independence of control power for each switchgear is maintained.

Manual control of the circuit breakers is provided on the electrical control board in the main control room where the operator has instrumentation showing the voltage on each of the two buses and the current flowing in each of the four feeder breakers.

The following annunciation is provided:

(1) Loss of Control Power

(2) Bus Failure or Undervoltage

8.2.1.7 6.9-kV Unit and RCP Board Control and Relaying

The alternate feeder to each 6.9-kV unit and RCP board is from one of the start buses with the normal feeder being from a unit station service transformer.

Each 6.9-kV unit and RCP board can be selected for automatic or manual transfer between the normal and alternate supply breakers. Manual transfers are high speed

(6 cycles or less) and can be made from the normal to the alternate supply or from the alternate to the normal supply. Automatic transfers can only be made from the normal to the alternate supply. Automatic transfers initiated by loss of voltage on the unit board are delayed until the bus residual voltage decreases to 30% of nominal. Those transfers initiated by reactor trip or turbine trip signals on the unit or RCP boards are high speed transfers. Control power is from the 250V dc distribution system.

The unit and RCP boards are protected by overcurrent, ground overcurrent, and differential current protective relays. Manual control of the two feeder breakers of each board is provided in the main control room. Load shedding provisions are included for these boards and will trip the alternate supply breakers on the 6.9-kV RCP board 1C, 1D, 2C, and 2D and 6.9-kV unit board 1B, 1C, 2B, and 2C. The operator has instrumentation that gives the voltage of each board and the current flowing in either of the two feeder breakers. The following annunciation is provided:

(1) Unit and RCP Board Transfer

(2) Unit and RCP Board Failure or Undervoltage

(3) Load Shedding Initiated

Annunciation No. 2 is composed of board differential relay operation, board ac voltage failure, and control bus dc voltage failure. Annunciation No. 3 is composed of a loss of voltage on either 6.9-kV start bus A or B or a 161-kV transmission system contingency (load shedding trip circuits are manually enabled) and both units 1 and 2 tripped.

8.2.1.8 Conformance with Standards

This section discusses provisions included in the design of the offsite (preferred) power system to achieve a system design in conformance with requirements of GDC 17, GDC 18, and NRC Regulatory Guides 1.6 and 1.32.

The following requirements of these documents apply to offsite power.

Criterion 17

General Design Criterion 17 requires that:

(1) "The offsite power supply be of sufficient capacity and capability to assure, assuming the onsite (standby) power supply is not functioning, that

(a) Specified acceptable fuel design limits and design conditions of the reactor coolant pressure boundary are not exceeded as a result of anticipated operational occurrences, and

(b) The core is cooled and containment integrity and other vital functions are maintained in the event of postulated accidents."

(2) "Electric power from the transmission network to the onsite electric distribution system shall be supplied by two physically independent circuits (not necessarily on separate rights of way) designed and located so as to minimize to the extent practical the likelihood of their simultaneous failure under operating and postulated accident and environmental conditions. A switchyard common to both circuits is permitted."

(3) Each of the two circuits supplying electric power from the transmission network to the onsite electric distribution system "shall be designed to be available in sufficient time following a loss of all onsite alternating current power supplies and the other offsite electric power circuit, to assure that specified acceptable fuel design limits and design conditions of the reactor coolant pressure boundary are not exceeded."

(4) One of the two circuits supplying electric power from the transmission network to the onsite electric distribution system "shall be designed to be available within a few seconds following a loss-of-coolant accident to assure that core cooling, containment integrity, and other vital safety functions are maintained."

(5) "Provisions shall be included to minimize the probability of losing electrical power from any of the remaining sources as a result of, or coincident with the loss of power generated by the nuclear unit, the loss of power from the transmission network, or the loss of power from the onsite electrical power sources."

Criterion 18

General Design Criterion 18 requires that the offsite power circuits be designed to permit periodic inspection and testing to show:

(1) "The operability and functional performance of the components" of the circuits,

(2) The operability of the circuits as whole systems, and

(3) "Under conditions as close to design as practical, the full operation sequence that brings the system into operation."

Regulatory Guide 1.6

Regulatory Guide 1.6 requires that "Each ac load group should have a connection to the preferred (offsite) power source. A preferred power source may serve redundant load groups."

Regulatory Guide 1.32

Regulatory Guide 1.32 states that "Criterion 17 delineates the design requirements regarding availability of power from the transmission network. Accordingly, a preferred design would include two immediate access circuits from the transmission network. An

acceptable design would substitute a delayed access circuit for one of the immediate access circuits provided that availability of the delayed access circuit conforms to General Design Criterion 17."

Each of the above requirements and the provisions included in the design to meet them is addressed in the discussion which follows:

The discussion is arranged in two parts:

(1) Physical measures for achieving independence and physical measures taken to minimize the likelihood of failures of portions of the offsite power system inducing failure of the other power sources and

(2) Functional provisions for achieving adequate capacity, capability, and availability; functional measures taken to minimize the likelihood of failure of portions of the offsite power system inducing failure of other power sources.

Physical Measures

The CSSTs and buses are connected and arranged to provide two physically independent offsite power (OSP) circuits to the onsite (Class 1E) distribution system. One OSP circuit that is connected to CSSTs A and D is designated P while the other OSP circuit that is connected to CSSTs B and C is designated R. Circuits designated P and R are routed in separate conduits and trays to assure physical independence with any exceptions and their justifications documented in the design criteria. Non-segregated phase buses are used to connect the secondaries of CSSTs C and D to 6.9-kV common switchgear C and switchgear D, respectively. Switchgear C and D are separated by 70 feet between centerlines. The outdoor portions of the buses, are weatherproof and equipped with 12OV, single-phase heaters to maintain the temperature inside the housing at least 5°C above outside temperature. The conductors are fully insulated with flame-retardant material, bus supports are flame retardant and the metal enclosures will prevent any arcing fault in one bus from damaging the other bus.

The 6.9-kV common switchgear C and D are connected to the 6.9-kV shutdown boards by cables arranged to provide two physically independent sources of offsite power. The cables from both 6.9-kV common switchgear C and D are in an underground conduit bank to a conduit vault [ ] From the conduit vault to the Turbine Building, the cables are in overhead trays that are 17 feet above ground (reference Figures 8.2-6A and 8.2-6B). The cables for the normal circuits are routed through cable trays and separate conduits through the Turbine Building and into the Auxiliary Building to the 6.9-kV shutdown boards. The cables for the alternate circuits are routed through cable trays and separate conduits alongside the exterior of the Turbine Building, across the top of the Control Building, and then enter the top of the Auxiliary Building and drop down to the shutdown boards (Figures 8.2-6A, -6B, -6C, and -6D). This routing assures that the normal and alternate for each shutdown board are physically separate and independent of each other. It does result in circuits from the secondaries of CSST C (designated as R) and CSST D (designated as P) being routed on common support

structures for a distance of 42 feet from a conduit vault to the Turbine Building wall (See Figure 8.2-6B). These tray supports are separated horizontally 6-1/2 feet, and the trays are 17 feet above grade, except where they enter the conduit vault. [

]

These cables (designated P and R) are routed in close proximity to each other in the conduit vault as they transition from the cable trays to their respective common switchgear ductbank, and in the Turbine Building as they transition from the cable trays to their respective conduits. These cables routed in free air, where they are in close proximity in the conduit vault and Turbine Building, are fire-wrapped to preclude one faulted circuit from affecting the other circuit.

A chain link fence (see Figure 8.2-6A) separates the cable tray supports from a maintenance access road. In addition, there is a 4-foot slope from the base of the pedestal-type supports to the road which is 10 feet away. Due to the size and quantity of insulated cables in each tray, it is very unlikely that either circuit would be lost due to a collapse of a support for any reason. Since cables for each circuit are separated as 3-phase bundles in the respective P or R designated tray, phase-to-phase faults between normal or alternate circuits are considered extremely unlikely. Thus, a ground fault on one circuit is the most likely type of fault.

A ground fault or a short circuit on the secondary side of either CSST C or CSST D is cleared by operation of its respective breaker in the Watts Bar Hydro Plant 161-kV switchyard. An automatic transfer of the loads fed from the faulted CSST will be initiated to the unfaulted CSST.

The faulted circuits can be isolated by opening the 6.9-kV common switchgear C and D breakers. By reclosing the WBH 161-kV switchyard breakers, power can be restored to the nuclear plant 6.9-kV shutdown boards through the unfaulted secondaries of CSST C and/or D. An alternate path is available to the shutdown boards from the 161-kV circuits by way of CSST A and/or CSST B through the maintenance supply circuit from the 6.9-kV unit boards to the 6.9-kV shutdown boards. The use of the maintenance supply can only be used when each unit is either in cold shutdown or has no fuel.

The offsite circuits are designed and located so as to minimize to the extent practical the likelihood of their simultaneous failure under operating and postulated accident conditions.

Common station service buses A and B maintain 61 feet centerline-to-centerline separation, until they converge at the unit start board. The buses run on separate support structures and run approximately 15 feet before entering the unit start board. At the unit start board, these buses enter the outdoor, metal-clad switchgear and connect to the board supply breakers. The buses are provided with gas resistant seals at the entry to the switchgear. The supply and feeder breakers at the 6.9-kV unit start board are electrically operated, vertical lift drawout type, with stored energy mechanisms. The unit start board consists of a normal feeder breaker and an alternate

feeder breaker for each of the 6.9-kV start buses A and B and the RCP start buses A and B. The normal feeder breaker and the alternate feeder breaker obtain their supply from separate buses and separate common station service transformers, thereby giving each start bus two possible and independent sources of power.

From the feeder breakers of the 6.9-kV unit start board, the two 6.9-kV unit start buses A and B and RCP start buses A and B run on separate support structures. These buses are outdoor, non-segregated, and the conductors are fully insulated with flame-retardant material. At the penetration of the outside building wall, the unit buses are provided with fire- and moisture-resistant barriers. The RCP start buses enter the outdoor metal-clad switchgear and connect to the RCP board supply breakers. These breakers are electrically operated, vertical lift drawout type, with stored energy mechanisms.

The 6.9-kV start buses enter the turbine building spaced 8 feet 6 inches centerline-to-centerline and maintain this spacing through the building. The start buses are tapped at appropriate places and routed to the appropriate supply breakers in the 6.9-kV unit and 6.9-kV common boards. The start buses enter the unit board supply breakers through the top of the boards. The unit board normal supply breaker and alternate supply breaker for each board are separated along the length of the board by several feeder breakers, thereby preventing a fault in one supply breaker from damaging the other. All buses are provided with gas-resistant seals at entry to the switchgear.

Functional Measures

Compliance with GDC 17 is discussed in the following paragraphs.

Each of the two 161-kV circuits providing offsite power to Watts Bar Nuclear Plant is supplied through two power circuit breakers connecting with separate sections of the main bus in the WBH Plant switchyard. The two overhead transmission lines are routed to minimize the probability of their simultaneous failure. Each 161-kV line terminates at a pair of 161 - 6.9-kV common station service transformers (A and D, and B and C, respectively). Each pair of transformers, as well as the buses and cables that are used to connect them to the onsite power (standby) distribution system at the 6.9-kV shutdown boards are physically and electrically independent.

Each of the 6.9-kV shutdown boards is connected to the offsite power circuits via common station service transformer (CSST) C or D through the 6.9-kV shutdown boards normal or alternate supply breakers. For a loss of power from either CSST C or D not due to a fault in the CSST differential zone of protection, under this alignment, the affected 6.9-kV shutdown board loads will be disconnected from offsite power and sequentially loaded onto their respective diesel generator.

For an acceptable range of 161-kV grid conditions, either offsite power circuit can start and supply all electrical equipment that would be supplied from the Class 1E distribution systems for a design basis accident in Unit 1 and no fuel in Unit 2 (via transformers C or D), and a simultaneous single worst case transmission system contingency. For this event, transformer C or D would be operating within its OA rating and adequate voltage would be supplied to the safety-related buses. A load-shedding

scheme is provided to reduce the BOP loads under certain conditions, but no credit is taken for load shedding in the TSS.

The BOP load-shedding scheme trips selected loads if both Unit 1 and Unit 2 generators are tripped and either voltage is lost at one of the start boards or certain 161-kV transmission system contingencies exist. These 161-kV transmission system contingencies are when the double-circuit WBH-SQN and

WBH-Athens 161-kV lines, the WBN-Rockwood line, or the three-terminal Roane-Rockwood-Kingston line is out of service. Initiation of load shedding is accomplished automatically by undervoltage and both units' generators tripped, or by the operator selecting the 161-kV system contingency switch mode and both units' generators being tripped. (The WBN operator manually selects the 161-kV contingency position on the normal/161-kV contingency switch.). Two reactor coolant pumps and two 6.9-kV unit boards per unit are tripped when the above conditions exist. Tripping of these loads results in a significant reduction (50% of the reactor coolant pumps and unit boards) of the station load.

The load-shedding scheme consists of two redundant trip and lockout circuits for each circuit breaker receiving a load-shed command. The redundant load- shedding circuits are located in different 6.9-kV start boards. One load- shedding circuit associated with CSST A is in 6.9-kV start board A, and the other which is associated with CSST B is in 6.9-kV start board B. Control power to the redundant auxiliary power system (APS) load-shedding circuits is provided from separated 250V dc batteries and battery boards. APS load- shedding circuit 1 receives control power from 250V DC Battery 1 via 250V Turbine Building Board 1, and APS circuit 2 from 250V DC Battery 2 via 250V Turbine Building Board 2. Loss of control power to either 250V Turbine Building Board initiates automatic transfer from the normal dc supply to the alternate dc supply with annunciation that auto transfer has occurred. This maximizes the ability of the load-shedding scheme to operate if grid and generator conditions warrant such operation.

The 6.9-kV shutdown boards are provided with loss-of-voltage and degraded- voltage relays that initiate transfer from the normal supply, to the standby (diesel generator) power supply. If the standby supply is paralleled with one of the offsite supplies for testing, loss of the standby supply would cause reverse power relays to trip the standby circuit breaker.

For a loss of offsite power during diesel generator testing, the diesel generator will switch to the emergency mode of operation with one exception. The diesel generator will remain in the testing mode if the 6.9kV shutdown board's offsite power feed is through the alternate feeder. In this case, the diesel generator's overcurrent relays are active to prevent the diesel generator from being overloaded. If an accident signal is initiated during testing of the standby supply, the standby breaker is tripped and the emergency loads are automatically energized by the offsite power supply. Should a LOCA and a loss of offsite power occur when a diesel generator is paralleled with the grid under test, its 6.9kV shutdown board standby and supply breakers are tripped, load shedding occurs and the diesel generator sequencer will load the accident loads. Only one diesel generator will be in the test mode at any given time unless both units

are in cold shutdown or not fueled; then, both diesels of the same train may be in test. Therefore, loss of any onsite power generation will not prevent the distribution system from being powered from the offsite circuits.

Common station service transformers C and D both have two 6.9-kV secondary windings with automatic high-speed load-tap changer units. Each secondary of the transformer is the normal power supply for one 6.9-kV shutdown board in each unit. Each secondary is also the alternate power supply for the opposite train, opposite unit 6.9-kV shutdown board in each unit.

The impedance between the two 6.9-kV secondary windings is more than 93% of the sum of the H to X and H to Y winding impedances, (H refers to the primary winding). The loading on one 6.9-kV winding has little effect on the voltage at the other winding, although this effect was considered in establishing grid interface requirements.

Overcurrent relaying and loss-of-voltage relaying for the shutdown boards are coordinated so that a faulted or overloaded bus will not be transferred from one preferred power circuit to another because of depressed voltage resulting from the fault or overload. For the range of grid conditions identified as acceptable, loss of power from one offsite power circuit, whether from failure at the transmission grid interface, failure of any part of the preferred power circuit itself, or failure of part of the onsite distribution system, will not cause loss or degradation of the other offsite power circuit. CSST A, B, C and D trips are initiated by any transformer or line failure relay such as fault-pressure, transformer-overcurrent, ground-current, line-protection, or differential relaying. Initiation of a CSST trip by these protective devices also causes automatic fast transfer of the 6.9-kV shutdown boards normally supplied from that CSST to their alternate supplies (except when blocked by the load shedding scheme described above).

The design of the control power feeders to 6.9-kV common switchgear C and D and to 6.9-kV shutdown boards ensures compliance with GDC 17, i.e., a loss of control power will not result in a loss of power from CSSTs C and D which provide ac power to Train A and Train B shutdown boards respectively. Specifically, 6.9-kV common switchgear C that normally provides ac power to Train A 6.9-kV shutdown board receives control power from the vital battery that provides control power to the Train A 6.9-kV shutdown board. Similarly, the control power to 6.9-kV common switchgear D is from the vital battery that provides control power to Train B 6.9-kV shutdown board.

The 6.9-kV common switchgear C (circuit breakers 1712 and 2714) and 6.9-kV shutdown board 1A-A feeder breakers 1716, 1718, and 1932 receive normal control power from 125 VDC vital battery board (VBB)I. The 6.9-kV common switchgear D (circuit breakers 1812 and 2814) and 6.9-kV shutdown board 1B-B feeder breakers 1726, 1728, and 1934 receive normal control power from 125 VDC VBBII. A design basis loss of VBBI and a single failure of VBBII (loss of control power) will result in the inability to automatically trip 6.9-kV common switchgear C and D, respectively, and will inhibit the automatic transfer of the respective 6.9-kV shutdown board until manual transfer to the alternate control power source is accomplished locally at the switchgear. However, this does not result in loss of offsite power; breakers 1712 and 2714 on

6.9-kV common switchgear C or breakers 1812 and 2814 on 6.9-kV common switchgear D will remain in their normally closed position.

The non-1E control power circuits from the vital battery boards to 6.9-kV common switchgear C and D have redundant protection (breaker and fuse) in the event of a failure. Selective coordination exists between the non-1E and Class 1E circuits that are fed from each of the vital battery boards. Thus, failure of all of the non-1E control power circuits on the vital battery boards will not have any effect on the 1E circuits or battery boards. WBNP is in full compliance with GDC 17.

Regulatory Guide 1.6 has been implemented by providing each ac load group with a connection to each of the preferred source circuits. Figure 8.1-2 indicates that redundant power trains in each unit are fed from different preferred source circuits. The two preferred source circuits are, however, shared between the two nuclear units.

Regulatory Guide 1.32 has been implemented by providing two immediate access circuits to the transmission network. Figures 8.1-2, 8.1-2a, 8.1-2b, and 8.2-1 indicate the functional arrangement of these continuously energized circuits.

Normal power is supplied to the 6.9-kV unit boards by the unit station service transformers; to the 6.9-kV common boards A and B by CSSTs A and B, and to the 6.9-kV shutdown boards by the CSSTs C and D during normal plant operation.

CSSTs A and B supply power to the 6.9-kV unit boards and 6.9-kV common boards A and B during startup or shutdown.

Power continuity to the 6.9-kV shutdown boards is provided from CSSTs C and D. To provide a stable voltage, these transformers have automatic high-speed load-tap changers on each secondary, which adjust voltage based on the normally connected shutdown boards. The load tap changers also have the capability to be manually adjusted from the control room, but automatic operation is the normal mode.

The 6.9-kV shutdown boards may also be powered from the unit boards; however, this line up is limited administratively only to occur with both units in cold shutdown or not fueled.

In addition to compliance with the above standards for portions of the offsite power system, the 6.9-kV start board, 6.9-kV unit boards, 6.9-kV RCP boards, and the associated 6.9-kV buses were procured in accordance with certain TVA standards and industry standards. TVA specifications require conformance of this equipment to such standards as the following: the overall construction, ratings, tests, service conditions, etc. are required to be in conformance to ANSI C37.20 and NEMA SG-5; the power circuit breakers are referenced to ANSI C37.4 through C37.9 and NEMA SG-4; associated relays are specified to conform to ANSI C37.1, instrument transformers to ANSI C57.13 and NEMA EI-2, and wiring to IPCEA S-61-402 and NEMA WC5.

The design of the equipment arrangement was also implemented to comply with GDC 3 for fire protection and with GDC 18 and Regulatory Guide 1.22 for each of periodic tests and inspections.

In accordance with GDC 18 requirements, the offsite power system has been designed to permit appropriate periodic inspection and testing. Transfers from the normal (offsite) supply to the alternate (offsite) supply, or from the normal or alternate supply to the standby supply, may be manual or automatic. Testing of these transfers while the nuclear unit is at power could result in transients that could cause tripping of the reactor or turbine. For this reason, testing of the manual and automatic sequence will be performed when the unit is shutdown. Provisions exist for individual testing of the BOP load-shedding circuits while maintaining the load-shedding capability of the circuit not being tested for any 161-kV grid contingency.

8.2.2 Analysis

Each 161-kV circuit and CSSTs C and D have sufficient capacity and adequate voltage to supply the essential safety auxiliaries of a unit under loss of coolant accident conditions concurrent with a simultaneous worst-case single transmission system contingency.

Physical separation of lines, primary and backup protection systems, and a strong transmission grid minimize the probability of simultaneous failures of offsite power sources. Results of steady-state and transient stability studies show that the offsite power sources remain intact and are reliable sources to supply the onsite electric power system for (1) an SI in a WBN nuclear unit with an electrical fault in the generator step-up transformer, or (2) an SI in a WBN nuclear unit and either the loss of SQN Unit 2, the loss of the largest load on the grid (Bowater 161-kV substation), or the loss of the most critical transmission line.

Transient stability studies included conditions of 3-phase faults on transmission lines connecting the nuclear units into the transmission system. Studies of these faults included stuck-breaker conditions in which WBN Unit 1 and its 500-kV lines were disconnected automatically from the transmission system. Also studied was an SI at WBN with the loss of SQN Unit 2. Transient stability studies of the 161-kV system supplying preferred power to the nuclear plant included 3-phase close-in and remote line faults, stuck-breaker conditions, main bus section faults, and an SI in a nuclear unit. For all cases studied, the worst case resulted from an SI in a nuclear unit and a simultaneous main bus fault on bus section 1-1 at WBH with normal clearing. The 161-kV bus voltage which supplies CSSTs A and D recovered to 153 kV (95%) after 25 cycles. The 6.9-kV CSST D-X bus voltage recovered to 6072 volts (88%) after 24 cycles.

System Operation

Each 6.9-kV shutdown board can be powered through any one of four shutdown board supply breakers. For normal operation, power is supplied from the common station service transformers C and D through the 6.9-kV common switchgear C and D circuits. The normal supply breakers are shown normally closed on Figure 8.1-2a. Shown normally open are the breakers that connect the alternate offsite power circuits to the shutdown boards (via CSSTs C or D), the emergency supply breakers that connect each shutdown board to a separate standby diesel generator, and the maintenance supply breakers that can provide power to the shutdown boards via the unit boards.

Automatic fast-bus transfers from the normal to the alternate source are initiated by CSST protection devices. Return to the normal supply is manual only. Manual transfers are fast transfers completed in approximately six cycles. Manual transfer may be effected between any incoming feeder breakers.

Each 6.9-kV shutdown board is equipped with loss-of-voltage and degraded-voltage relaying. When a shutdown board is connected to either its normal or alternate power source, loss-of-voltage or degraded-voltage initiates bus transfers to the standby diesel generator supply.

The degraded-voltage relays (27 DAT, DBT, DCT) have a voltage setpoint of 96% of 6.9 kV (nominal, decreasing). These relays are arranged in a two-out-of-three coincidence logic (Figure 8.3-5A) to initiate a 6-second (nominal) time delay. At the end of 6 seconds, if the voltage is still low, an alarm will be annunciated in the Control Room, a trip of the 6.9-kV shutdown-board supply breaker will occur, load shedding from the 6.9-kV and 480V shutdown boards and diesel generator start will be initiated, and the 480V shutdown-board current-limiting reactor-bypass breaker will close.

The undervoltage protection consists of three sets of relays. The first set of these relays (27LVA, LVB, LVC) has a voltage setpoint of 87% of 6.9 kV (nominal, decreasing). These relays are arranged in a two-out-of-three coincidence logic (Figure 8.3-5A) to initiate a time delay that is set at 0.75 seconds. At the end of this time delay, if the voltage is still low, a trip of the 6.9-kV shutdown-board supply breaker will occur. Once the supply breakers have been opened, a second set of induction disk-type undervoltage relays, 27D, which has a voltage setpoint of 70% of 6.9 kV (nominal, decreasing) and an internal time delay of 0.5 seconds (nominal) at zero volts, will start the diesel generator. A third set of induction disk-type undervoltage relays, 27S, which has a voltage setpoint of 70% of 6.9 kV (nominal, decreasing) and an internal time delay of 3 seconds (nominal) at zero volts, will initiate load shedding of the loads on the 6.9-kV shutdown board, selected loads on the 480V shutdown board, and closure of the 480V shutdown-board current-limiting reactor bypass breaker.

The time delays associated with the 27DAT, DBT, DCT and with the 27LVA, LVB, LVC relays are designed to allow for normal voltage transients on the system.

Voltage relays monitor the circuits to each 6.9-kV shutdown board's alternate and emergency supply breakers and permit automatic transfer to those sources only when adequate voltage is available. A typical transfer scheme is shown schematically in Figure 8.3-5 for 6.9-kV shutdown board 1A-A.

To protect the Class 1E equipment from a sustained over-voltage, each 6.9-kV shutdown board is provided with a set of two instantaneous solid-state overvoltage relays, 59-O. These relays are arranged in a one-out-of-two logic which annunciates in the main control room after a short time delay. The relays have a nominal voltage setpoint of 7260 volts ∀ 1% (110% of motor rated voltage). Upon receipt of the overvoltage alarm, the operator takes the necessary action to reduce the voltage.

The loss-of-voltage load-shedding relays are not bypassed when on diesel power, but will remain in the circuit at all times. WBNP's basis for retention of this feature is that

it provides for automatic resequencing of the loads following any temporary loss of bus voltage. Since the loss-of-voltage load-shedding relay setpoint is fixed at 4830 volts ∀ 5% (70% of 6.9 kV) with an inverse time delay, the starting of the largest driven load will not cause actuation of the load shedding feature. Therefore, the operation of the load-shedding relay system is:

(1) To shed the loads to prevent overloading the diesel generator and close the 480V shutdown-board current-limiting reactor-bypass breaker.

(2) Allow the diesel generator to recover to rated speed and voltage.

(3) And reconnect the loads in proper sequence.

Overcurrent and differential overcurrent protective relays are provided for each shutdown board to lockout all supply breakers if the loss of voltage is caused by overload or an electrical fault. This prevents transfer of a fault between offsite power circuits or to the diesel generator. This minimizes the probability of losing electrical power from the transmission network on the onsite electrical power source.

Each of the offsite preferred power sources is monitored by an undervoltage relay. In the event of a loss of voltage on either 6.9-kV start bus A or B with both units tripped, or a 161-kV transmission system contingency (load shedding trip circuits are manually enabled) and both Unit 1 and Unit 2 tripped, the load-shedding scheme will be initiated. This load-shedding scheme will trip off part of the BOP loads. The alternate supply breakers on 6.9-kV unit boards 1C, 1B, 2C, and 2B; 6.9-kV RCP boards 1C, 1D, 2C and 2D; and 6.9-kV common board A, panel 16 will be tripped and locked out. Two redundant trip and lockout circuits are provided for each circuit breaker being load-shed. These redundant circuits have coincident logic features to minimize the probability of failure to operate and spurious trips. Functional test capability is built into each load-shedding circuit. The test features allow independent testing of each circuit while maintaining the load shedding feature of the circuit not undergoing testing. The redundant load-shedding circuits will be tested periodically.

Table 8.2-1 Common Station Service Transformer (Csst) Loading
(Sheet 1 of 2)

Equipment	Max Load* or Rating (MVA)
CCST A	
H-WDG	76 MVA
X-WDG	48 MVA
Y-WDG	48 MVA
CSST B	
H-WDG	76 MVA
X-WDG	48 MVA
Y-WDG	48 MVA
CSST A	
H-WDG	55 MVA
X-WDG	40 MVA
Y-WDG	40 MVA
|	
CSST D	
H-WDG	55 MVA
X-WDG	40 MVA
Y-WDG	40 MVA

*The worst case loading is less than or equal to the transformer rating.

Table 8.2-1 Offsite Power System Equipment Capabilities – Worst-Case-Parameters (Continued)
(Sheet 2 of 2)

Equipment	Rating or Nominal Limits	Allowable Operating Time
EQUIPMENT CAPABILITIES VOLTAGE LIMITS		
A. Balance of Plant Motors		
	6.6-kV Rated	
	Min Operating kV 5.94 kV	Continuous
	Min Starting kV 5.61 kV	Not Applicable
	Max Operating kV 7.26 kV	
B. Class 1E Motors		
	6.6-kV Rated	
	Min Operating kV 5.94 kV	Continuous
	Min Starting kV 5.61 kV	Not Applicable
	Max Operating kV 7.26 kV	

THIS PAGE INTENTIONALLY BLANK

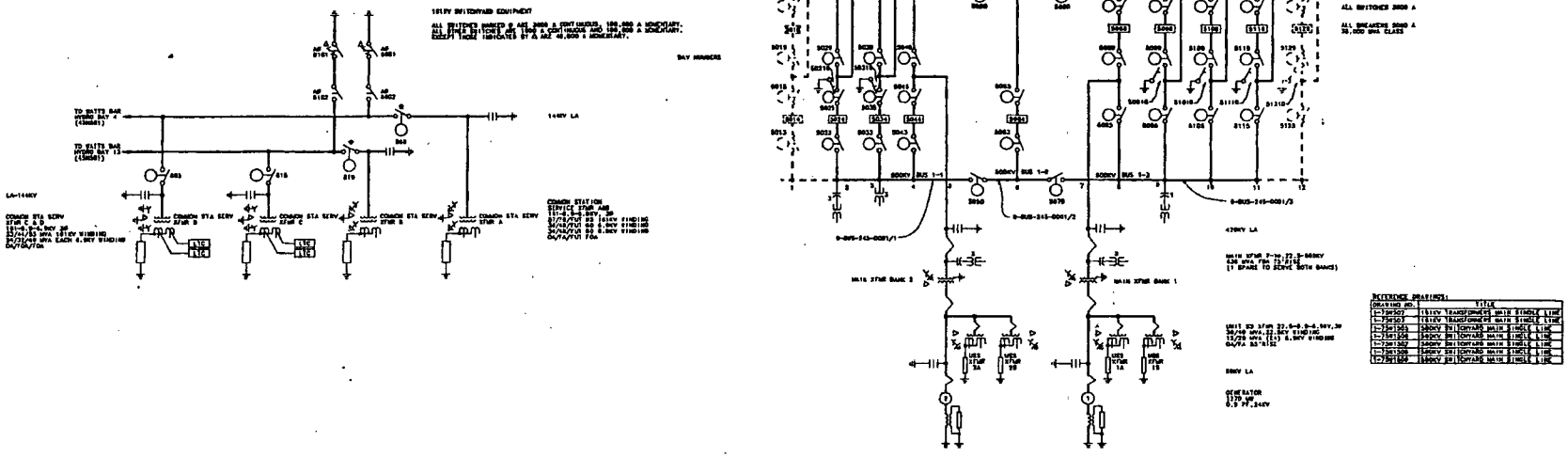

Amendment 89

Figure 8.2-1 Powerhouse Units 1 and 2 Wiring Diagram Development Single Line

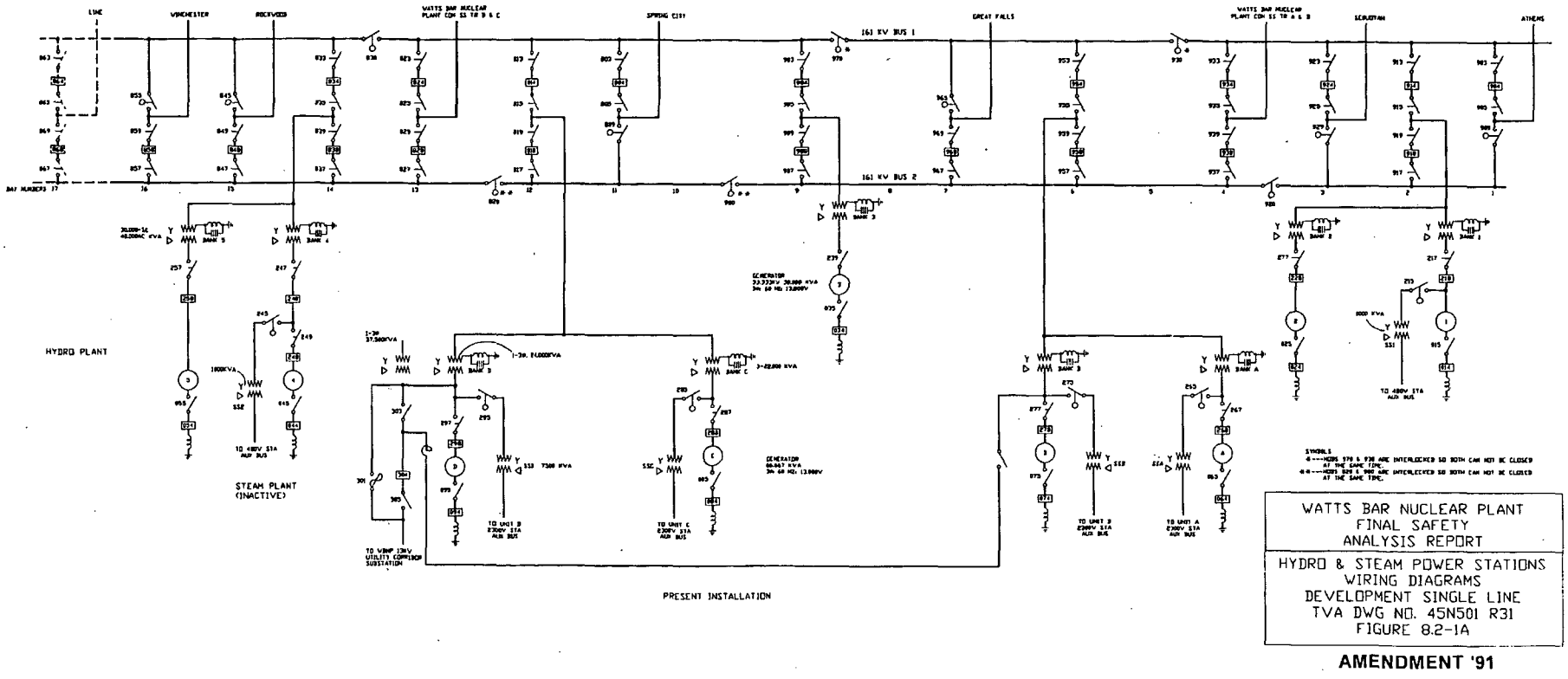

AMENDMENT '91

Figure 8.2-1a Hydro and Steam Power Stations Wiring Diagrams Development Single Line

31

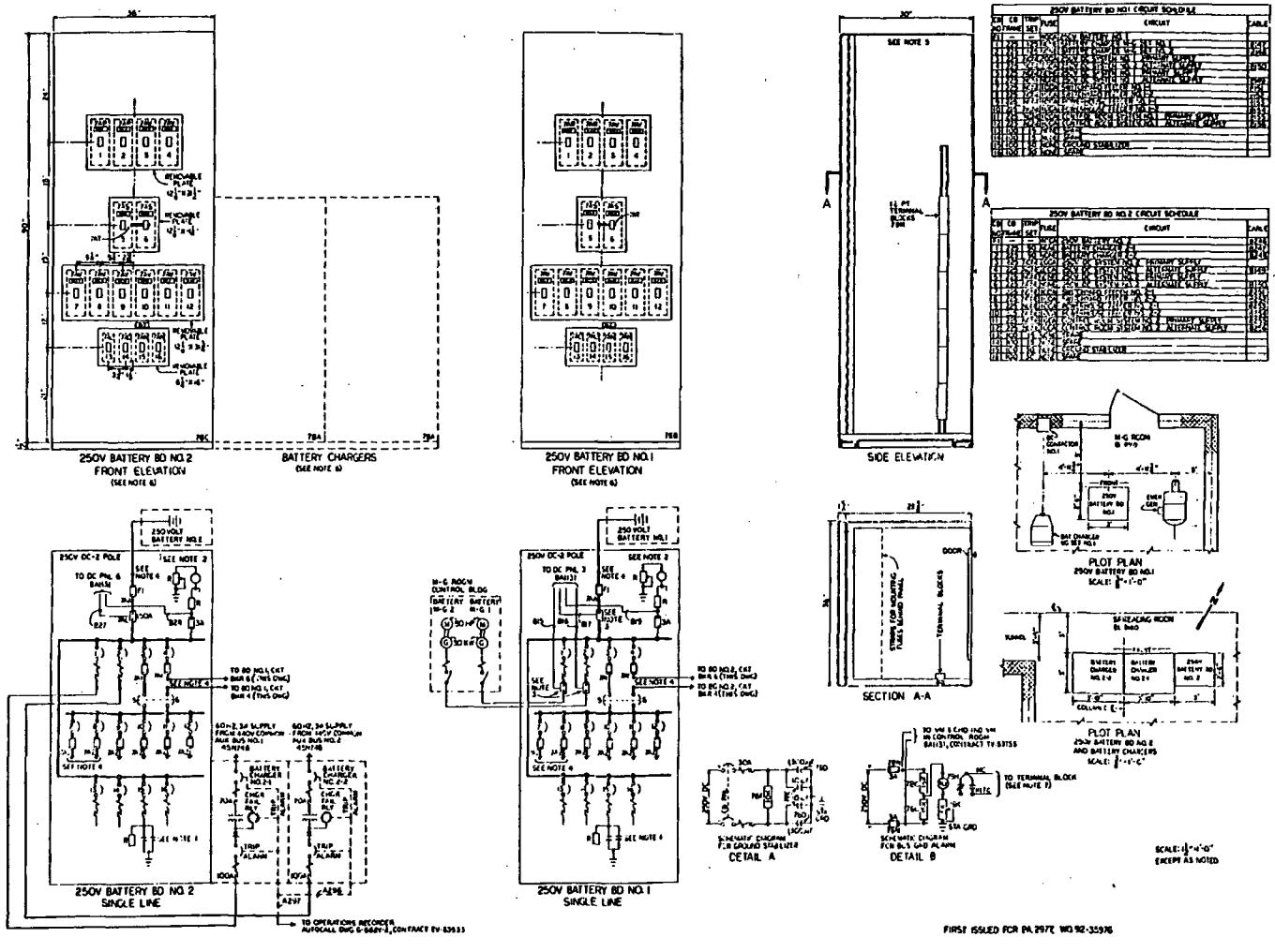

Added by Amendment 48

WATTS BAR NUCLEAR PLANT FINAL SAFETY ANALYSIS REPORT
CONTROL BUILDING SWITCHBOARDS 250V DC BATTERY BOARDS TVA DWG NO. 45W709 R0 FIGURE 8.2-1b

Figure 8.2-1b Control Buildtng Switchboards 250V D.C. Battery Boards

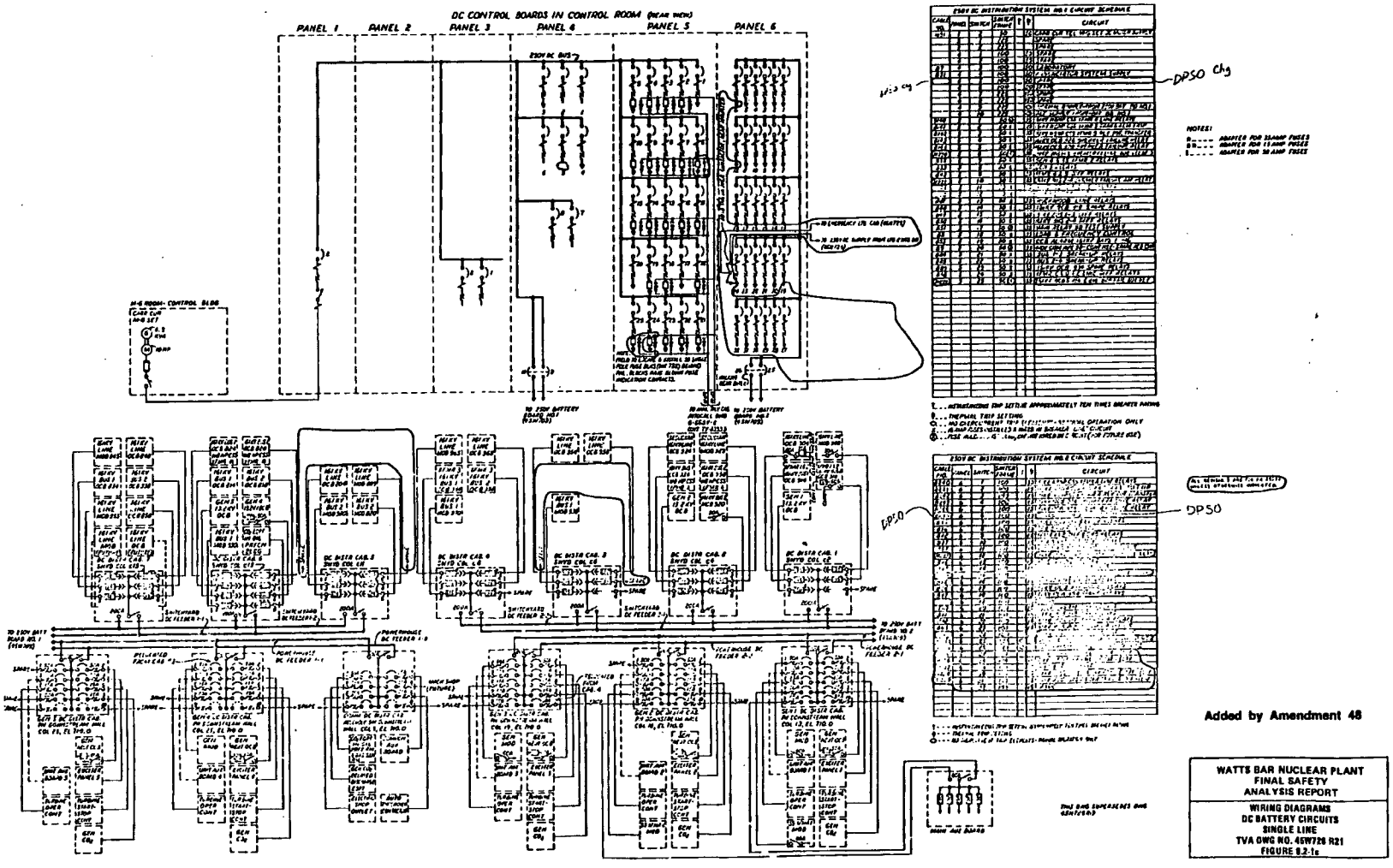

Figure 8.2-1c Wiring Diagrams D.C. Battery Circuits Single Line

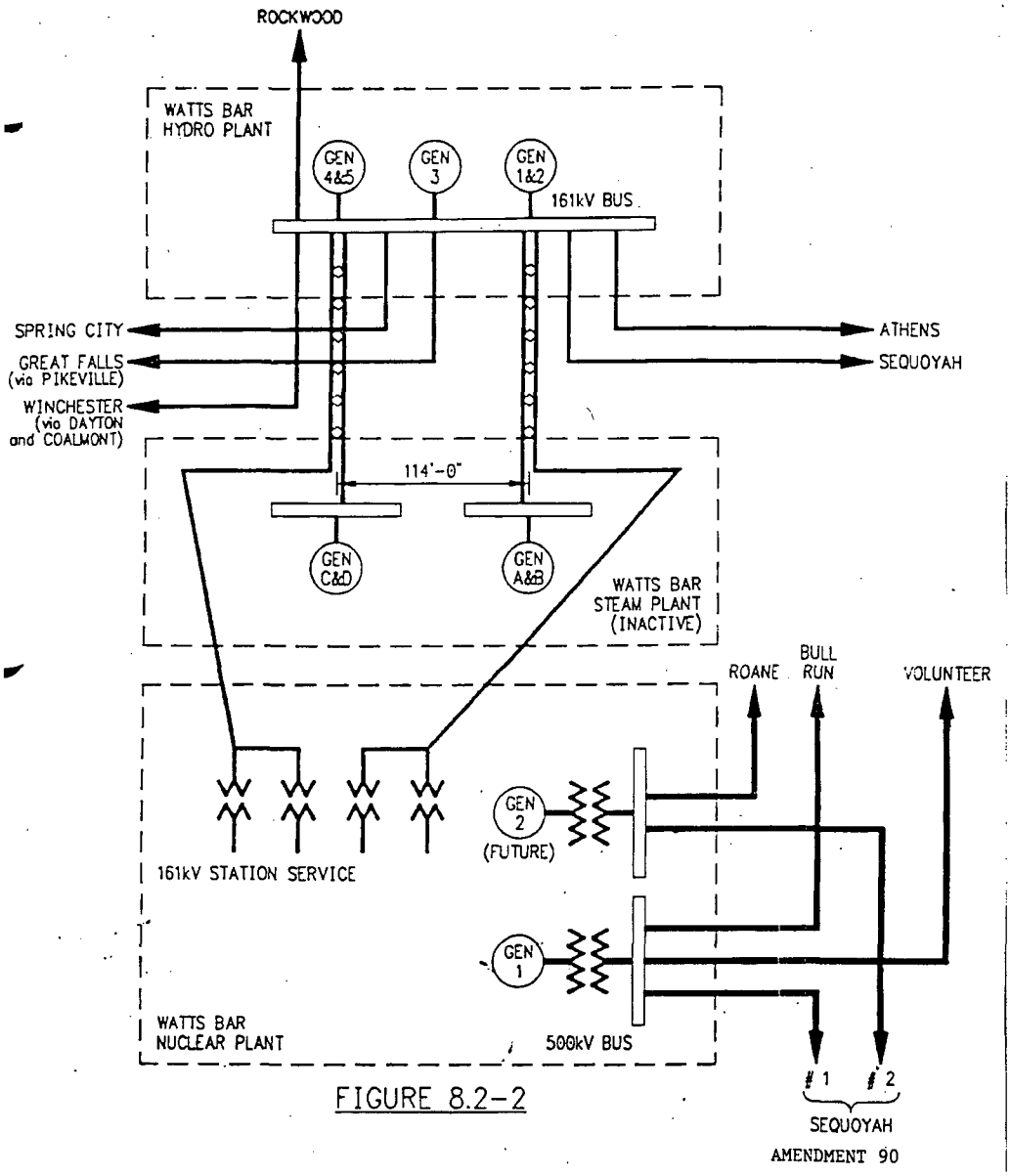

Figure 8.2-2 Tennessee Valley Authority Transmission Planning Department 500 And 161kv Transmission Arrangement

[s5]

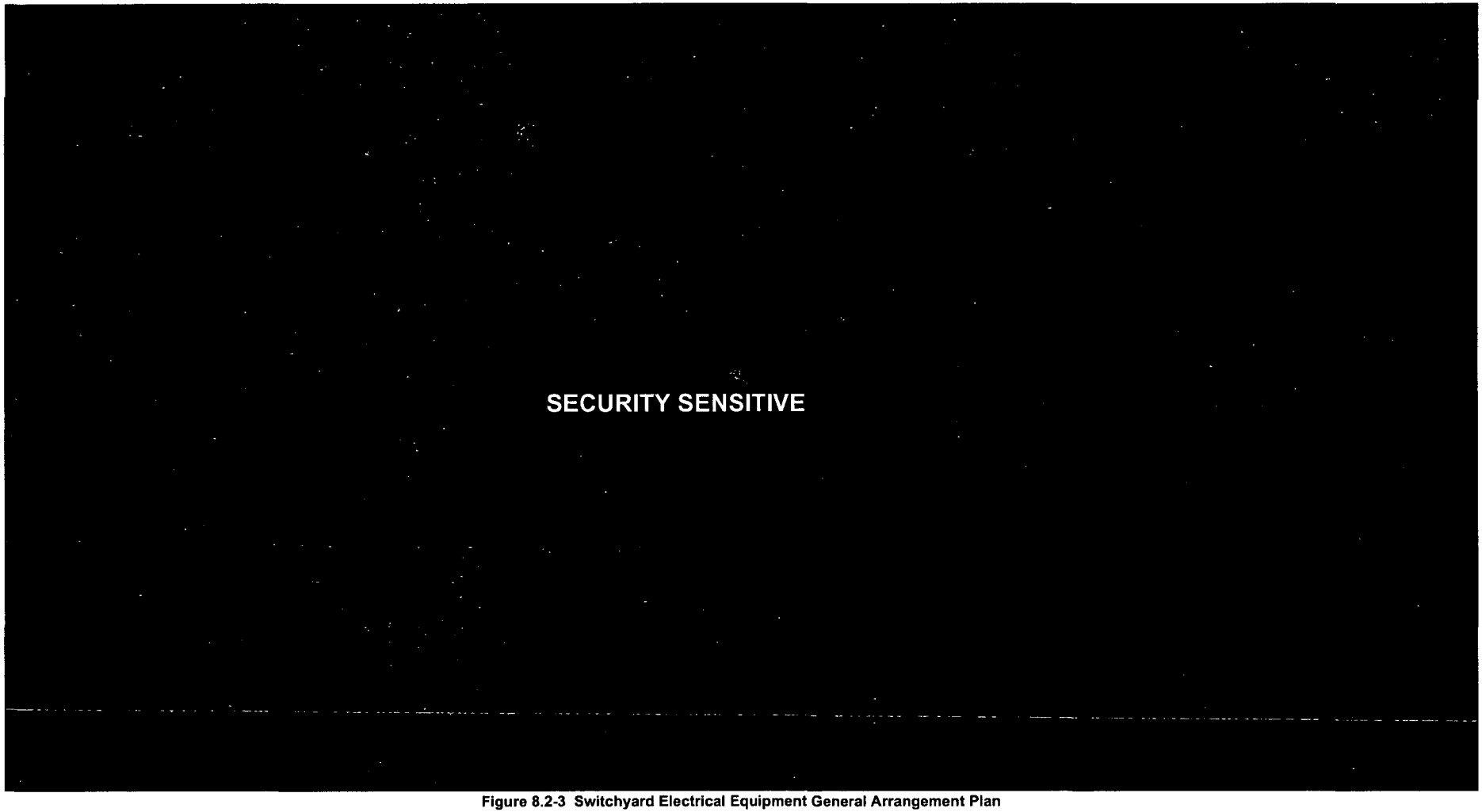

Figure 8.2-3 Switchyard Electrical Equipment General Arrangement Plan

[e5]

[s5]

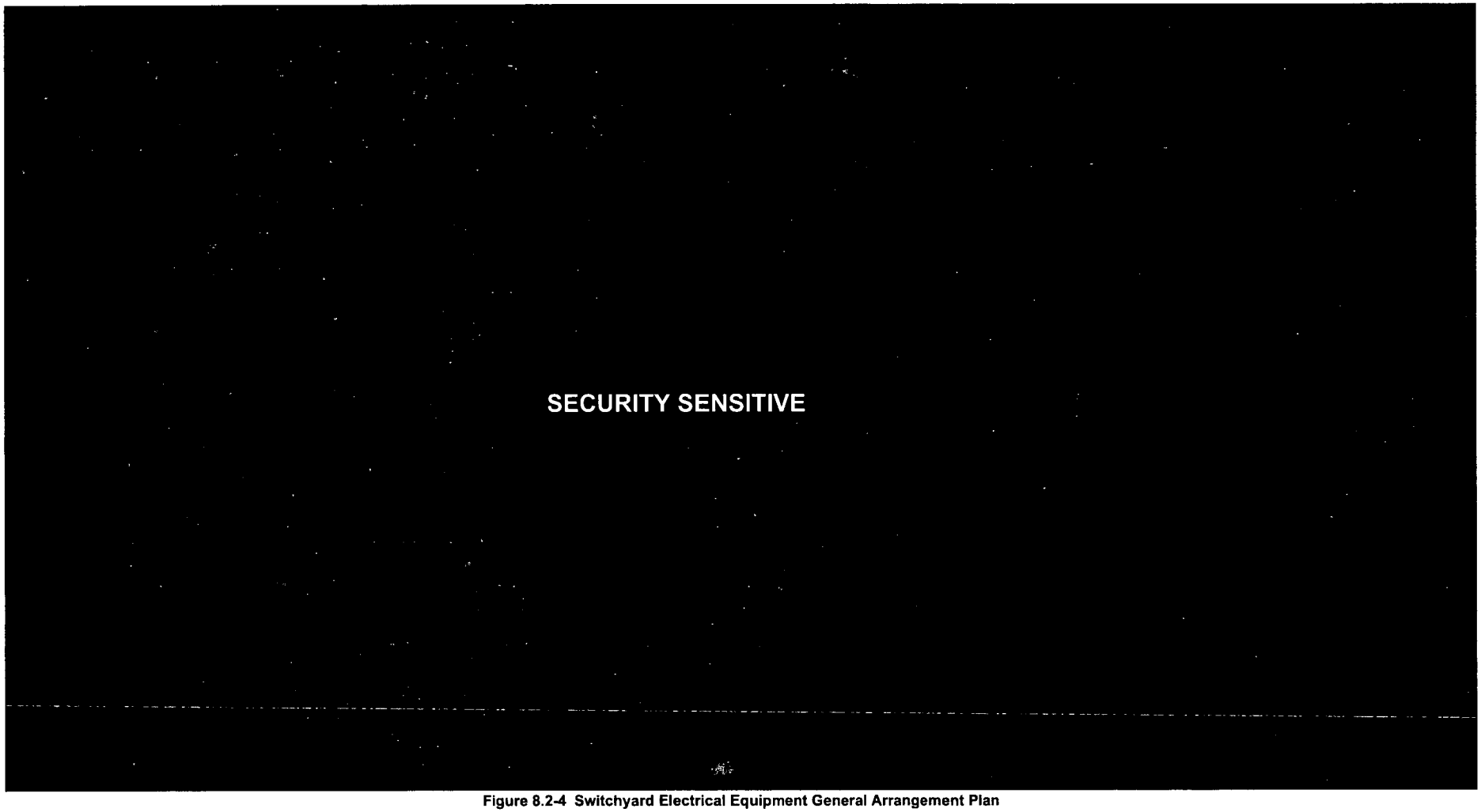

Figure 8.2-4 Switchyard Electrical Equipment General Arrangement Plan

[e5]

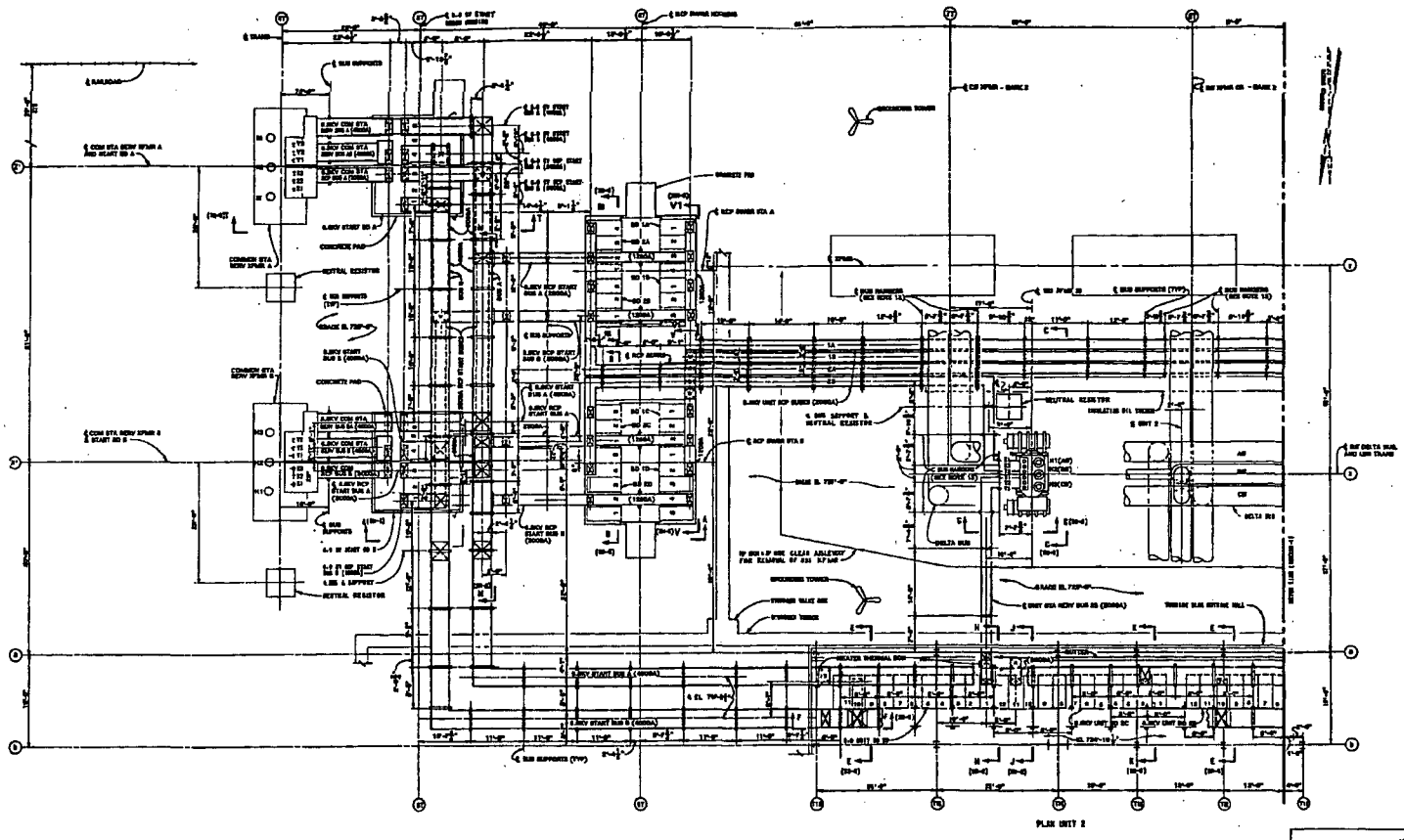

Amendment 89

WATTS BAR
FINAL SAFETY
ANALYSIS REPORT

POWERHOUSE
UNITS 1 & 2
ELECTRICAL EQUIPMENT
COM & UNIT STA SERV & RCP
6900V BUSES SHT-2
DWG NO. 45N230-2 RD
FIGURE 8.2-5

Figure 8.2-5 Powerhouse Units 1 & 2 Electrical Equipment Com & Unit Sta. Serv. & RCP 6900v Buses (Sheet 2)

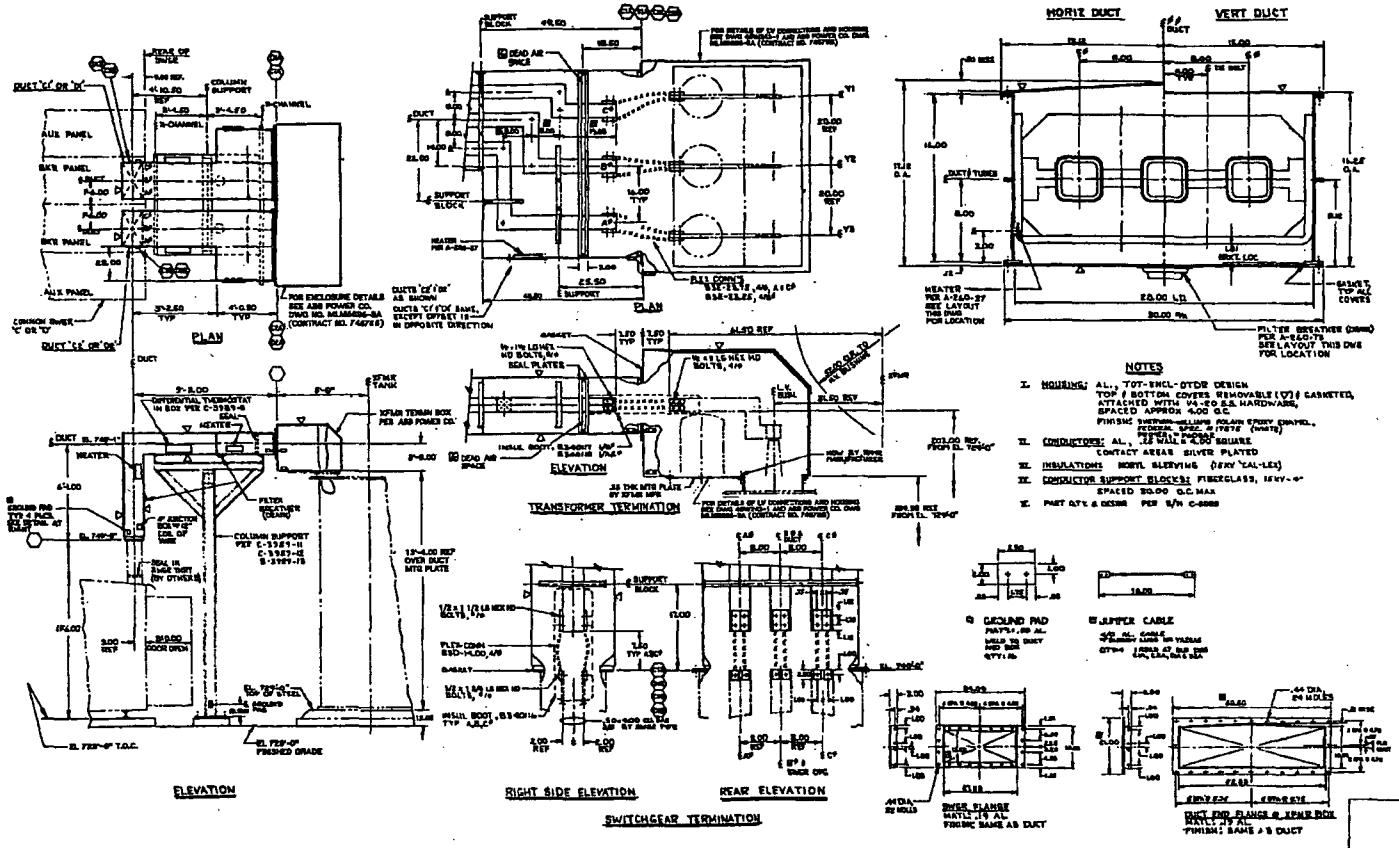

Amendment 89

WATTS BAR
FINAL SAFETY
ANALYSIS REPORT

15KV, 2000A, 3P, 3W,
TUBE TYPE DUCT
LAYOUT, CROSS-SECTION,
FLANGES, SWGR &
XFMR TERMN
TVA DWG NO. 829073-D3989-1 R901
FIGURE 8.2-5A

Figure 8.2-5a 15kV, 2000A, 3P, 3W Tube Type Duct Layout, Cross-Section, Flanges, SWGR & SFMR Termin

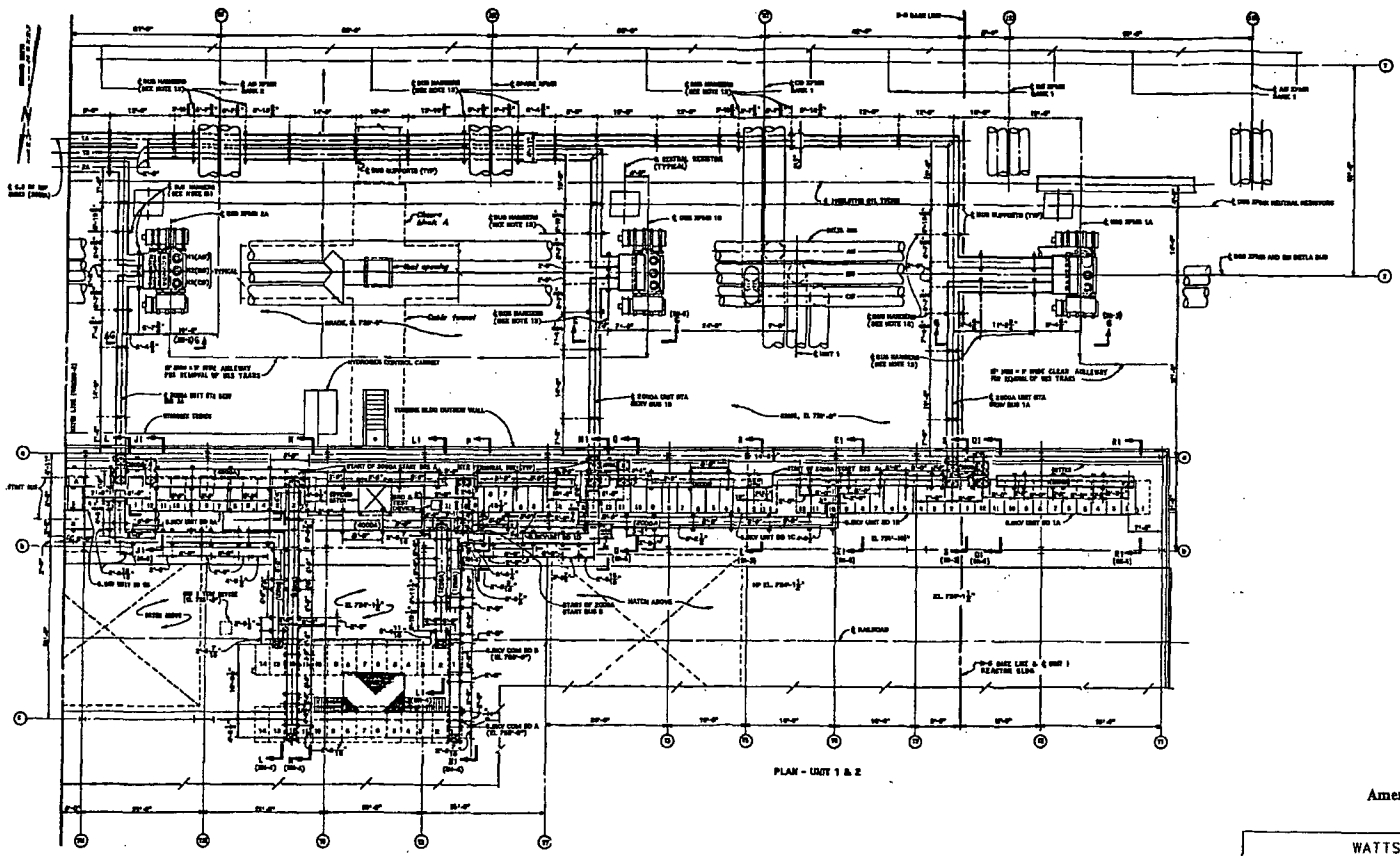

Amendment 89

WATTS BAR
FINAL SAFETY
ANALYSIS REPORT

POWERHOUSE
UNITS 1 & 2
ELECTRICAL EQUIPMENT
COM & UNIT STA SERV & RCP
6900V. BUSES SHT-1
DWG NO. 45N230-1 RE
FIGURE 8.2-6

Figure 8.2-6 Powerhouse Units 1 and 2 Electrical Equipment Com & Unit Sta. Servo and RCP 6900V Buses (sheet 1)

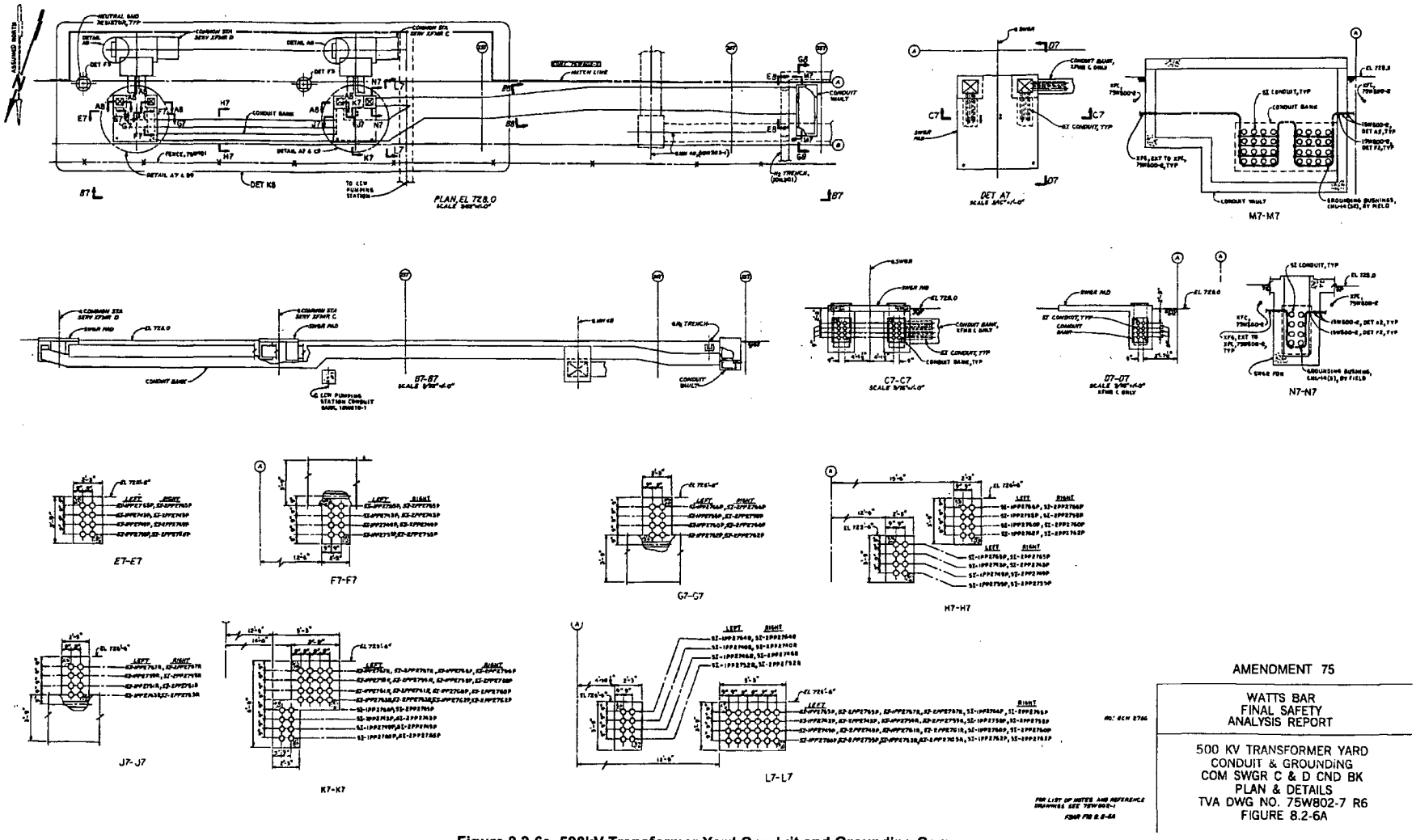

Figure 8.2-6a 500kV Transformer Yard Conduit and Grounding Com SWGR C&D CND BK Plan and Details

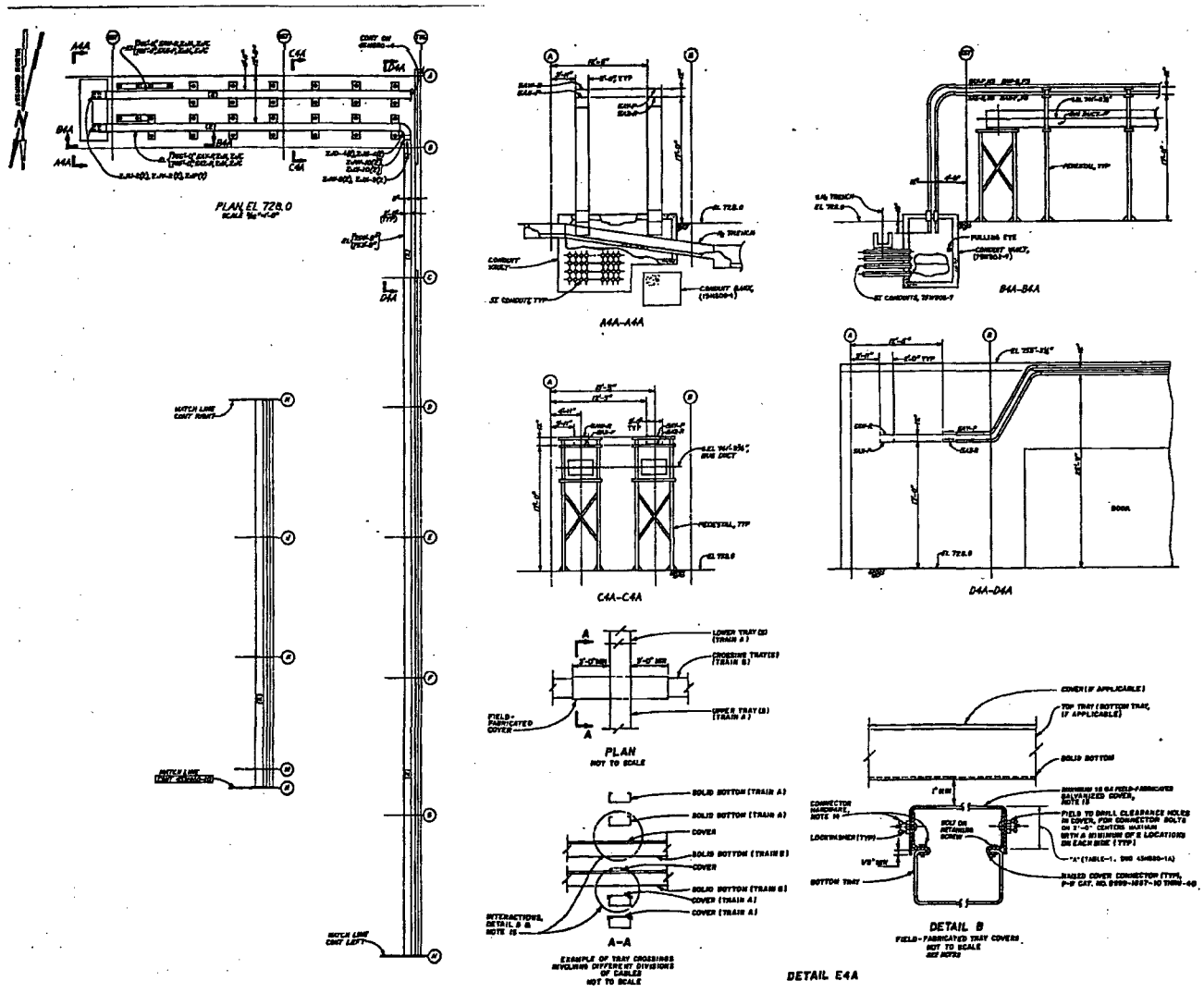

Figure 8.2-6b Powerhouse Turbine Building - Unit 2 Conduit and Grounding Cable Trays -EL. 728.0 Plan and Details

Amendment 89

WATTS BAR
FINAL SAFETY
ANALYSIS REPORT

POWERHOUSE
TURBINE BUILDING UNIT 2
CONDUIT & GROUNDING
CABLE TRAYS - EL 728.0
PLAN & DETAILS
TVA DWG NO. 45W880-4A RD
FIGURE 8.2-6B

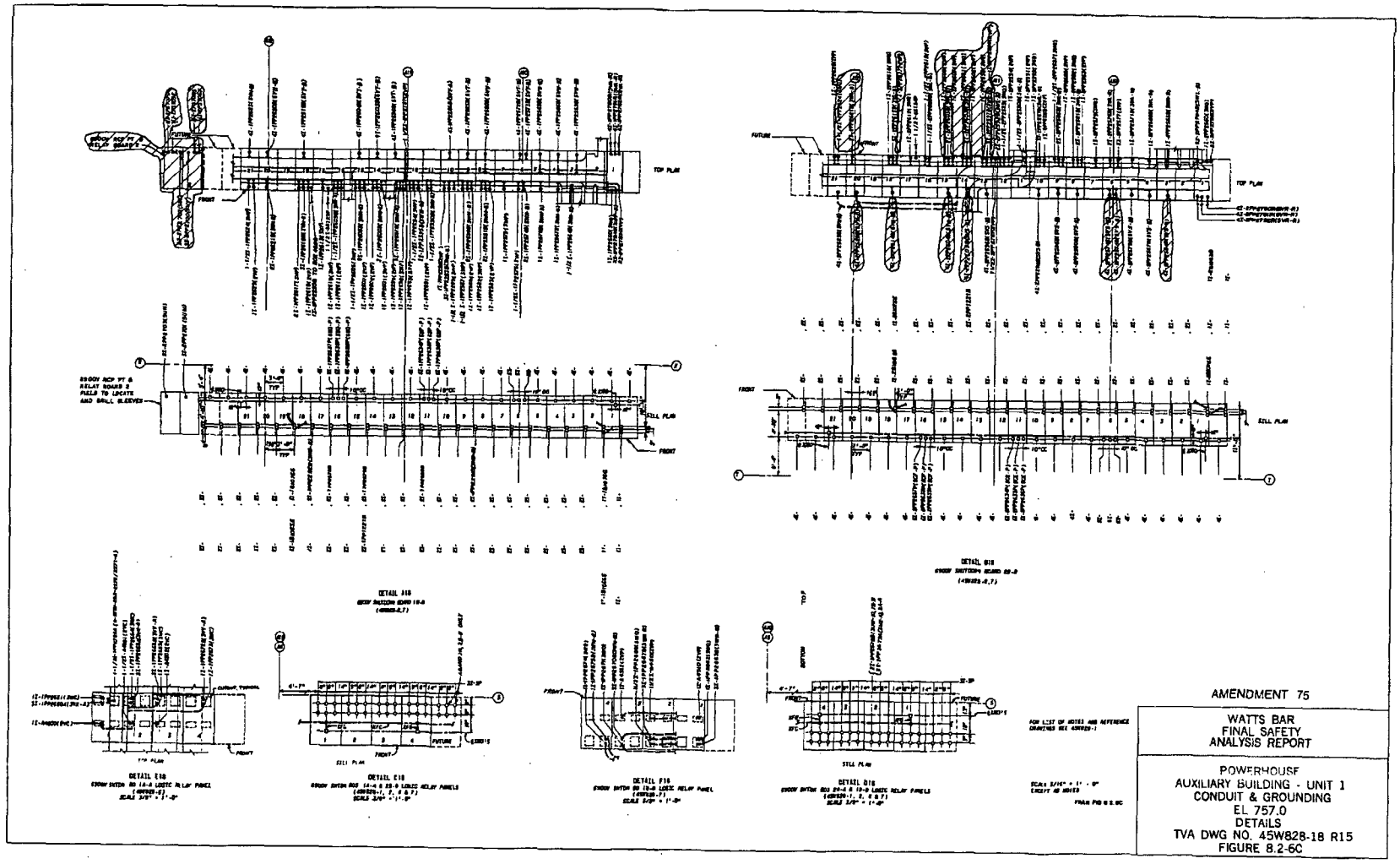

Figure 8.2-6c Powerhouse Auxiliary Building - Unit 1 Conduit and Grounding EL. 757.0 Details

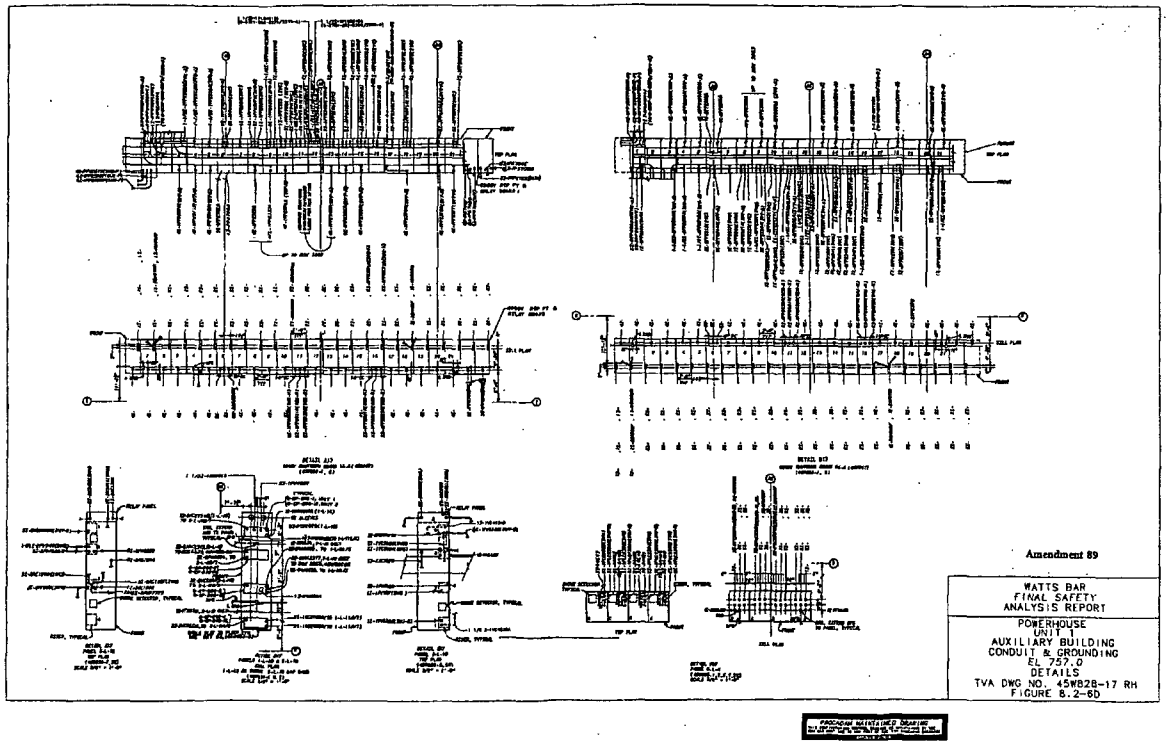

Figure 8.2-6d Powerhouse Auxiliary Building - Unit 1
Conduit and Grounding EL. 757.0 Details

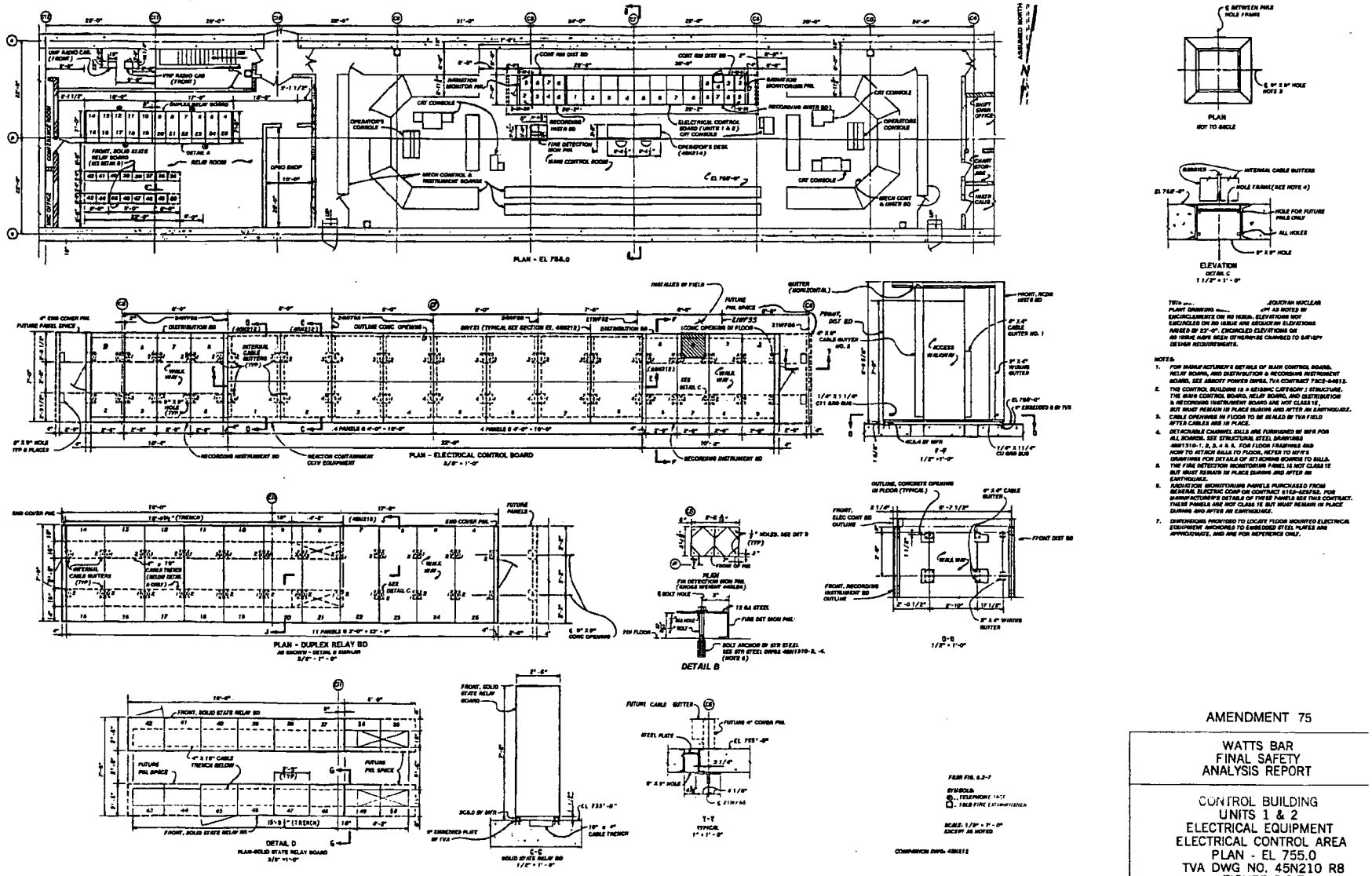

Figure 8.2-7 Control Building Units 1 and 2 Electrical Equipment Electrical Control Area Plan - EL. 755.0

Figure 8.2-8 Deleted by Amendment 90

Figure 8.2-8a Deleted by Amendment 90
(Sheets 1 thru 12)

Figure 8.2-9 Deleted by Amendment 90

Figure 8.2-10 Deleted by Amendment 90

[s5]

SECURITY SENSITIVE

Figure 8.2-11 Control Building Units 1 and 2 Electrical Equipment Battery and D.C. Eqpt. Room Plans. Sections and Details

[e5]

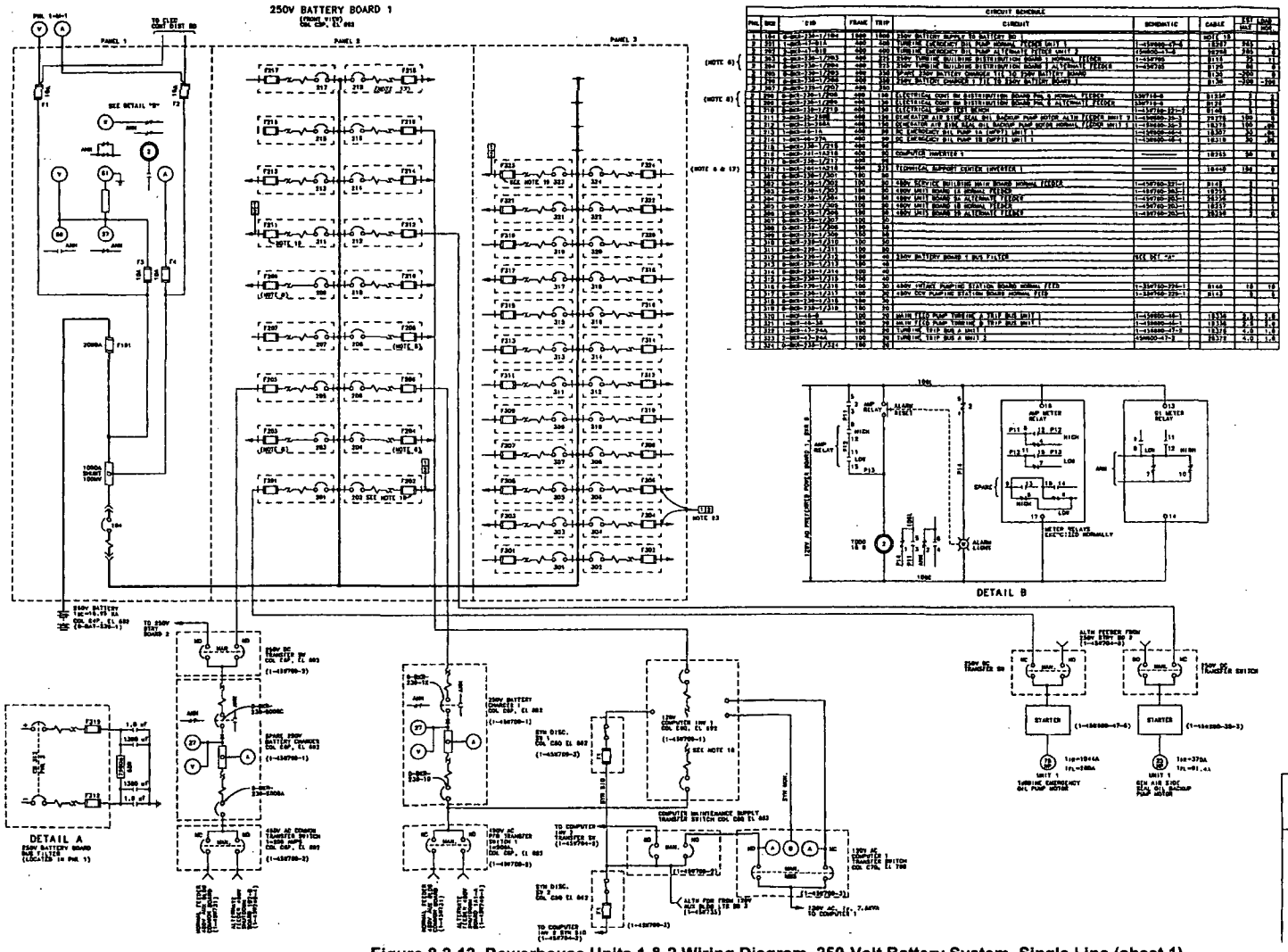

Amendment 89

WATTS BAR
FINAL SAFETY
ANALYSIS REPORT

POWERHOUSE
UNITS 1 & 2
WIRING DIAGRAM
250 VOLT BATTERY SYSTEM
SINGLE LINE
TVA DWG NO. 1-45W704-1 R16
FIGURE 8.2-12

Figure 8.2-12 Powerhouse Units 1 & 2 Wiring Diagram, 250-Volt Battery System, Single Line (sheet 1)

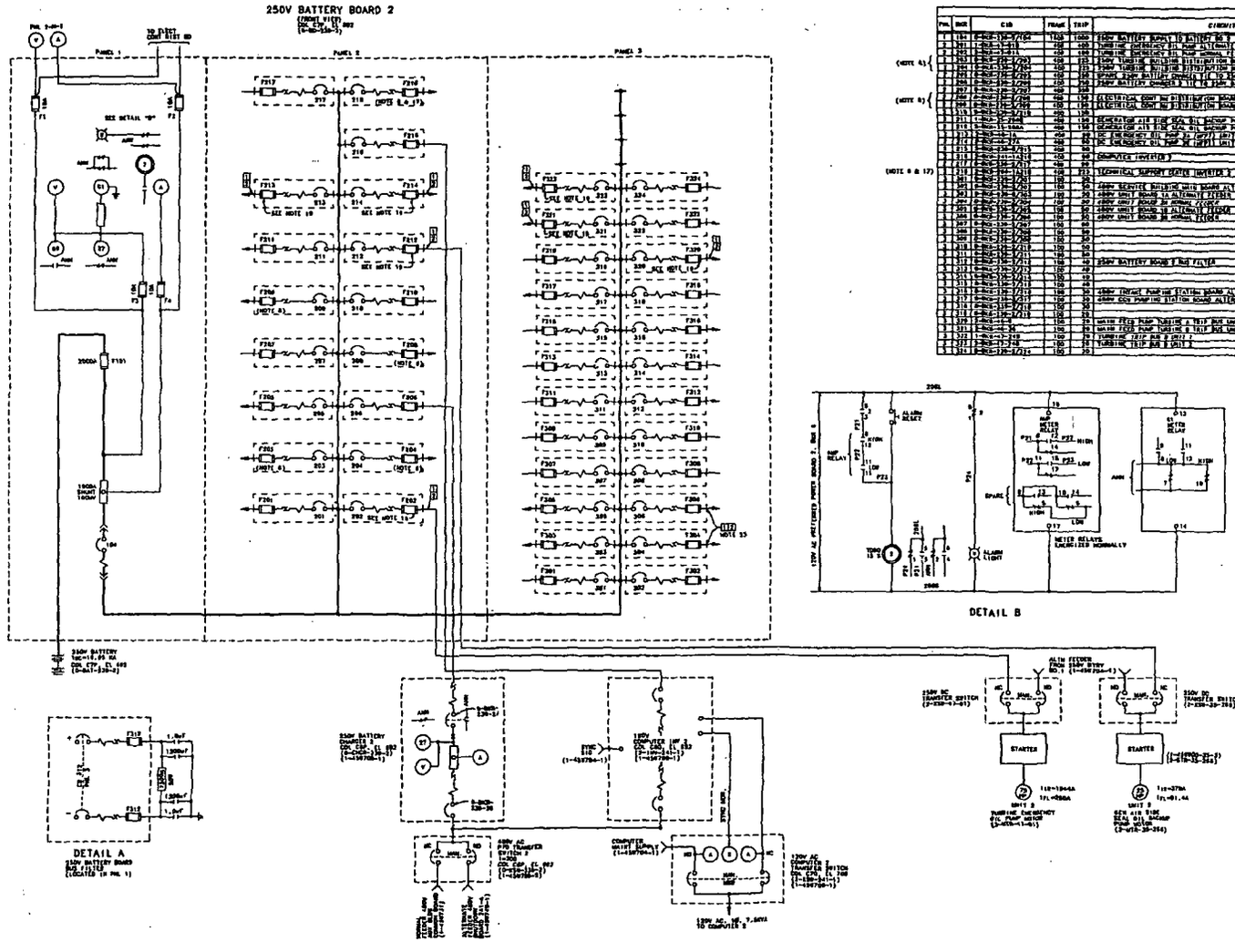

Amendment 89

WATTS BAR
FINAL SAFETY
ANALYSIS REPORT

POWERHOUSE
UNITS 1 & 2
WIRING DIAGRAM
250 VOLT BATTERY SYSTEM
SINGLE LINE
TVA DWG NO. 1-45W704-2 R14
FIGURE 8.2-13

Figure 8.2-13 Powerhouse Units 1 and 2 Wiring Diagrams 250 Volt Battery System Single Line

8.3 ONSITE (STANDBY) POWER SYSTEM

8.3.1 AC Power System

The onsite ac power system is a Class 1E system which consists of: (1) the Standby ac Power System, and (2) the 120V Vital ac System. The safety function of the Standby ac Power System is to supply power to permit functioning of components and systems required to assure that (1) fuel design limits and reactor coolant pressure boundary design conditions are not exceeded due to anticipated operational occurrences, and (2) the core is cooled and vital functions are maintained in event of a postulated accident in one unit and to safely shutdown the other unit, subject to loss of the Preferred Power System and subject to any single failure in the Standby Power System. The safety functions of the 120V Vital ac System is to supply power continuously to reactor protection, instrumentation, and control systems; engineered safety features instrumentation and control systems; and other safety-related components and systems, subject to loss of offsite and standby ac power sources and any single failure within the Vital ac System.

8.3.1.1 Description

Standby AC Power System

The Standby ac Power System is a safety-related system which continuously supplies power for energizing all ac-powered electrical devices essential to safety. Power continuity to the 6.9-kV shutdown boards is maintained by switching the preferred (normal or alternate offsite) sources, and the standby (onsite) source. Source selection is accomplished by automatically transferring from normal or alternate sources to the standby source. The reverse transfers are manual. The circuits connecting the normal, alternate, and standby sources to the distribution portion of the Standby ac Power System are shown in Figure 8.I-2a. The normal and alternate power circuits and the transfer scheme used to effect the source switching for these circuits is further discussed in Section 8.2.

System Structure

The standby ac auxiliary power distribution system consists of the following:

(a) The four Class 1E diesel generator units (EDGU).

(b) The 6.9 kV shutdown boards and 6.9 kV shutdown relay logic panels.

(c) The 6.9-kV/480-V transformers and the 480V shutdown boards.

(d) All the motor control centers supplied by the 480-V shutdown boards for both units.

(e) The Class 1E additional diesel generator unit (ADGU, not required for Unit 1 operation) when it is replacing one of the EDGU.

(f) The 6.9 kV diesel generator board C-S.

(g) The 480-V diesel auxiliary supply board C-S.

(h) The 480-V diesel auxiliary board C1-S and C2-S.

This system is shown on Figure 8.I-2a.

The Standby Power System is divided into two redundant load groups. Each load group is composed of two power trains (train- 1A and 2A; train - 1B and 2B) and supplies power to all plant safety-related equipment. The power train assignment for safety-related electrical boards is indicated by use of a -A or -B suffix following its designation on all drawings and documents. Loads supplied from these boards are safety-related unless designated on the single line drawings with a triangle symbol. Equipment shown on schematic drawings is safety- related when designated with a train assignment of A or B. Nonsafety-related loads are also supplied from the Standby Power System through Class 1E protective devices.

Physical Arrangement of Components

The boards, motor control centers, and transformers comprising the system are arranged to provide physical independence and electrical separations between power trains necessary for eliminating credible common mode failures. The power train assignment for safety-related electrical equipment is indicated by use of an -A or -B suffix following its designation on all drawings and documents.

The specific arrangements of these major components are described as follows:

Reference: Figures 8.3-1 through 8.3-4.

Diesel Generators

The physical arrangement of the five diesel generators and all support equipment provides physical independence by isolation as indicated in Figures 8.3-1 and 8.3-1A. Each diesel generator and its associated support equipment is separated from all

others by missile and fire barrier type walls. (See Section 9.5.1) The additional diesel generator unit (ADGU, not required for Unit 1 operation) is located in the ADGU building which is separate from the other four diesel generators.

The ADGU which has the same capacity as any one of the existing diesel generator units (EDGU), 4400-KW, may serve as a replacement of any one of the four EDGU. It has no train designation until it has been manually aligned (electrically, mechanically, etc.) to replace an EDGU. Then it will assume the train requirements of the unit being replaced and shall be considered to be a part of the engineered safeguards. (See Figures 8.3-24A and 8.3-24B).

The manual electrical alignment sequence is as follows:

(a) Control and annunciation cables - The control and annunciation switching required to substitute the ADGU for a trained EDGU will require the transfer of the control and annunciation cables at two isolation points. (1) At the disabled EDGU's control and annunciator distribution panels located in the diesel generator building, the control and annunciation cables required for operation of the disabled EDGU will be switched to those cables required for the operation of the ADGU. (2) In the ADGU building, the ADGU's control and annunciation cables are connected to the disabled EDGU train control and annunciation connectors. The connectors are keyed to assure that each plug can only be plugged into the correct receptacle. This design provides separation of trained equipment by energizing only one set of ADGU control connectors at a time and providing two isolation points to preclude a single failure from affecting more than one EDGU (see Figures 8.3-14A through 8.3-29E).

When the control and annunciation connections have been made, the ADGU may be controlled by the controls of the EDGU it replaced in the main control room. This will allow remote, and remote automatic starting of the ADGU.

Panels located in the ADGU building contain all of the controls necessary to permit operation and testing of the ADGU locally. (See Figures 8.3-14A through 8.3-29E.)

(b) Disconnect and transfer - The disabled EDGU 6.9-kV disconnect switch is opened, and then the transfer switch to the ADGU is closed. The disconnect and transfer switches are Class 1E qualified. (See Figure 8.1-2a.)

(c) Feeder breaker - The 6.9-kV feeder breaker is racked into the compartment of the 6.9-kV DG board C-S, for the disabled EDGU, and closed.

With the controls, annunciators, transfer switches, and circuit breaker aligned as described, the ADGU is an exact electrical functional replacement for the disabled EDGU.

6900-Volt Shutdown Boards 1A-A, 1B-B, 2A-A, and 2B-B

These boards are located in the Auxiliary Building at elevation 757.0. They are arranged electrically into four power trains (2 per unit) with two boards associated with each load group and each unit. The boards comprising load group A are located in the Unit 1 area and those of load group B are located in the Unit 2 area. The load group A boards are separated from the load group B boards by an 8-inch reinforced concrete wall extended to the ceiling (see Section 9.5.1). The minimum distance between load group A and load group B boards is 8 feet 11-1/2 inches. The two boards associated with load group A or load group B are separated from each other by a distance of 19 feet 9 inches.

6900-480-Volt Shutdown Board Transformers 1A1-A, 1A-A, 1A2-A, 1B1-B, 1B-B, 1B2-B, 2A1-A, 2A-A, 2A2-A, 2B1-B, 2B-B. and 2B2-B

These transformers are located in the Auxiliary Building at elevation 772.0. Four rooms have been provided so that the transformers associated with power trains A and B of both nuclear units are in separate rooms. The walls isolating these rooms are made of 8-inch reinforced concrete and extend to the ceiling (see Section 9.5.1). The three transformers associated with one train of each unit are located in one of the four rooms (Figure 8.3-2).

6900-Volt Diesel Generator Board (C-S)

This board is located in the ADGU building at elevation 742.0 and is connected to the ADGU through a normally closed breaker at compartment B (Figure 8.3-4B).

Compartments F, H, J, and E of this board feed the existing EDGU transfer switches. Only one breaker for these four compartments is used, thus allowing the ADGU to be connected to one transfer switch at any one time when it is being substituted for an EDGU (see FSAR Figure 8.3-24B).

480-Volt Shutdown Boards 1A1-A, 1A2-A1, 1B1-B, 1B2-B, 2A1-A, 2A2-A, 2B1-B, and 2B2-B

Separate rooms for the 1A, 2A, 1B and 2B boards and their respective 480-volt Control/Auxiliary Building Vent boards are located in the Auxiliary Building at elevation 757.0 (Figure 8.3-3).

480-Volt Reactor MOV Boards 1A1-A, 1A2-A, 1B1-B, 1B2-B, 2A1-A, 2A2-A, 2B1-B, and 2B2-B

These boards are located in the Auxiliary Building at elevation 772.0. They are located in separate rooms on a power train basis and are located in the same room as the reactor vent boards associated with the same unit and train. The 480-volt Auxiliary Building common board is in the room with MOV boards 1A1-A and 1A2-A. The isolating walls of these rooms are constructed of 8-inch reinforced concrete extended to the ceiling (see Section 9.5.1 and Figure 8.3-2).

480-Volt Reactor Vent Boards 1A-A, 1B-B, 2A-A, and 2B-B

These boards are located in the rooms with the 480-volt reactor MOV boards described above (Figure 8.3-2).

480-Volt Control/Auxiliary Building Vent Boards 1A1-A, 1A2-A, 1B1-B, 1B2-B, 2A1-A, 2A2-A, 2B1-B, and 2B2-B

These boards are located in the rooms with the 480-volt shutdown boards described above (Figure 8.3-3).

480-Volt Diesel Auxiliary Boards 1A1-A, 1A2-A, 1B1-B, 1B2-B, 2A1-A, 2A2-A, 2B1-B, 2B2-B, C1-S and C2-S

These boards are located in the diesel generator building at elevation 760.5 except for boards C1-S and C2-S which are located in the ADGU Building on elevation 760.5 (Figure 8.3-4C). They are located in separate rooms on a unit and train basis. The isolating walls of the rooms are reinforced, poured-in-place concrete (see Section 9.5.1). Interconnecting doorways are protected by self-closing fire-resistance doors (Figure 8.3-4).

480-V Diesel Auxiliary Supply Board (C-S)

This board is located in the ADGU Building at elevation 760.5. It has two buses, bus A and bus B, separated by a bus tie breaker (TB).

For normal operation, power is supplied from the 6.9 kV common board A panel 15.

Upon loss of offsite power, and with the ADGU aligned to replace any disabled EDGU, the ADGU will supply power to Class 1E loads required to support the ADGU in its operating mode (see Figures 8.3-30A through 8.3-31C).

6900-480-Volt Pressurizer Heater Transformers 1A-A, 1B-B, 1C, ID, 2A-A, 2B-B, 2C, and 2D

These transformers are located in the Auxiliary Building at elevation 782.0. Transformers 1A-A, 2A-A, 1D and 2D are located in one room in the unit 1 area. Transformers 1B-B, 2B-B, 1C and 2C are located in one room in the unit 2 area (Figure 8.3-2).

System Operation

Each 6.9-kV shutdown board can be powered through any one of four shutdown board supply breakers. For normal operation, power is supplied from the 6.9-kV common station service transformers C and D through the common station service Switchgear C and D circuits. The breakers are shown normally closed on Figure 8.1-2A. Shown normally open are the breakers connecting the alternate offsite power circuits to the shutdown board (via common station service transformers C and D), the breaker connecting the shutdown board to a diesel generator for standby operation, and the maintenance circuit to the shutdown boards (via the unit boards). However, the

maintenance source shall only be used when both units are in the cold shutdown mode.

For a discussion of the automatic transfer of the shutdown boards see Section 8.2.2.

When the preferred (offsite) power is not available, each shutdown board is energized from a separate standby diesel generator.

Each 6.9-kV shutdown board is equipped with loss-of-voltage and degraded-voltage relaying. The loss-of-voltage and degraded-voltage relays initiate a transfer to the standby diesel generator. When a 6.9-kV shutdown board is supplied from an alternate supply, the loss-of-voltage and degraded-voltage relays will also initiate automatic transfer from the alternate to the standby diesel-generator supply. Voltage relays monitor each source and permit connection only if adequate power is available. A typical transfer scheme is shown in Figure 8.3-5 for 6.9-kV shutdown board 1A-A.

To protect the Class 1E equipment (motors, etc.), each 6.9-kV Class 1E shutdown board is provided with one set of degraded-voltage relays and three sets of undervoltage relays. The degraded-voltage relays (27DAT, DBT, and DCT) have a voltage setpoint of 96% of 6.9-kV (nominal, decreasing).

The relays are arranged in a two-out-of-three coincidence logic (Figure 8.3-5A) to initiate a six-second (nominal) time delay. At the end of 6 seconds if the voltage is still low, an alarm will be annunciated in the Control Room, a trip of the 6.9-kV shutdown board supply breaker will occur, load shedding from this board and selected loads from the 480V shutdown board will be initiated, and the 480V shutdown-board current-limiting reactor-bypass breaker is closed.

The undervoltage protection consists of three sets of relays. The first set of these relays (27LVA, LVB, LVC) has a voltage setpoint of 87% of 6.9-kV (nominal, decreasing). These relays are arranged in a two-out-of-three coincidence logic (Figure 8.3-5A) to initiate a time delay that is set at 0.75 seconds. At the end of this time delay, if the voltage is still low, a trip of the 6.9-kV shutdown board supply breaker will occur. Once the supply breakers have been opened, a second set of induction disk-type undervoltage relays, 27D, which has a voltage setpoint of 70% of 6.9-kV (nominal, decreasing) and an internal time delay of 0.5 seconds (nominal) at zero volts, will start the diesel generator. A third set of induction disk-type undervoltage relays, 27S, which has a voltage setpoint of 70% of 6.9-kV (nominal, decreasing) and an internal time delay of 3 seconds (nominal) at zero volts, will initiate load shedding of the loads on the 6.9-kV shutdown board, selected loads on the 480V shutdown board, and closure of the 480V shutdown-board current-limiting reactor-bypass breaker.

The time delays associated with the 27DAT, DBT, DCT and the 27LVA, LVB, LVC relays are designed to allow for normal voltage transients on the system.

To protect the Class 1E equipment (motors, etc.) from a sustained overvoltage, each 6.9-kV Class 1E bus is provided with a set of two solid-state overvoltage relays, 59-0. These relays are arranged in a one-out-of-two logic which annunciates in the main

control room. The relays have a nominal voltage setpoint of 7260 volts + 1% (110% of motor rated voltage). The operator takes the necessary action to reduce the voltage.

The loss-of-voltage load-shedding relays are not bypassed when on diesel power, but will remain in the circuit at all times. TVA's basis for retention of this feature is that it provides for automatic resequencing of the loads following any temporary loss of bus voltage. Since the loss-of-voltage load-shedding relay setpoint is fixed at 4830 volts ± 5% (70% of 6.9-kV) with an internal time delay of 3 seconds at zero volts, the starting of the largest driven load will not cause actuation of the load-shedding feature. Therefore, the operation of the load-shedding relay system is:

(1) To shed the loads to prevent overloading the diesel generator and close the 480V shutdown-boards current-limiting reactor-bypass breaker,

(2) To allow the diesel generator to recover to rated speed and voltage, and

(3) To reconnect the loads in proper sequence.

Overcurrent and differential-overcurrent protective relays are provided for each shutdown board to lockout all supply breakers if the loss of voltage is caused by overload or an electrical fault. This prevents transfer of a faulted bus between offsite power circuits or to the diesel generator. This minimizes the probability of losing electrical power from the transmission network or the onsite electrical power source.

A loss of voltage on the 6.9-kV shutdown board starts the diesel generator and initiates logic that trips the supply feeder breakers, all 6.9-kV loads (except the 480V shutdown board transformers), and the major 480-V loads. The bypass breaker for the 480-V shutdown-boards current-limiting reactor is also closed as part of this logic. Table 8.3-2 shows the loads that are automatically tripped. Figures 8.3-6 through 8.3-13 show the load stripping schematically. When the diesel generator has reached rated speed and voltage, the generator will be automatically connected to the 6.9-kV shutdown board bus. (Refer to Figure 8.3-14B, 14C, 14D and 14E). This return of voltage to the 6.9-kV shutdown bus initiates logic which connects the required loads in sequence. Table 8.3-3 shows the order of applied loads. The standby (onsite) power system's automatic sequencing logic is designed to automatically connect the required loads in proper sequence should the logic receive an accident signal prior to, concurrent with, or following a loss of all nuclear unit and preferred (offsite) power.

There are no automatic transfers of board supplies between redundant power sources. All 480V shutdown boards and all motor control centers have alternate feeders to their respective board buses. Transfers between the normal and alternate feeders are manual. Some manual transfers of loads between power trains are used. These transfers are tabulated in Table 8.3-10.

All circuit breakers supplying the alternate feeders for the manual transfers in Table 8.3-10 [with the exception of the spent fuel pit pump C-S, the 125V auxiliary feedwater turbine (AFWT) dc manual transfer switch (units 1 and 2), and the 120V AFWT AC manual transfer switch (units 1 and 2)] are normally opened. The transfer switches are mechanically interlocked to prevent closing a switch in a manner to parallel both feeds.

Breaker position for alternate feeders will either be alarmed in the main control room when closed or will be verified to be open on a weekly basis unless analysis verifies that the alternate feeder and its source have the capability/capacity to carry the load for the worst case loading conditions. For the components where power supply alignment is critical (battery chargers, inverters, and component cooling water pump C-S) the alternate feeder breakers are verified open in accordance with the technical specifications. For the other components (spent fuel pit pump C-S and turbine driven auxiliary feedwater pump control power) where power supply alignment is not important, breaker position verification is not required.

A manual means of supplying power to the 480V Auxiliary Building common board (which is not normally supplied power from the diesel generators during a condition where offsite power is lost) is provided. Provisions have been made to manually connect this board to the 480V shutdown boards 1B2-B and 2B2-B. This is shown in Figure 8.3-15. The purpose of these feeders is to provide power to operate the ice condenser refrigeration units, located on the 480V Auxiliary Building common board and glycol pumps, located on the 480V Auxiliary Building MCC B and C, during the unlikely condition of a loss of offsite power that exceeds 2 to 3 days. The two normal bus feeder breakers must be moved from their normal compartments to the compartments which are connected to the 480V shutdown boards 1B2-B and 2B2-B.

System Instrumentation

Remote instrumentation of the 6.9-kV shutdown boards consist of transducer driven ammeters for the normal and alternate preferred feeders, diesel generator feeder, and all motor loads. Also included are bus voltmeters and various annunciations which are located in the Main Control Room and Auxiliary Control Room. This is shown on Figures 8.3-16 through 8.3-19. The diesel generator feeder has a watt transducer and a var transducer mounted on the 6.9-kV shutdown board which drives remotely located meters in the Main and Auxiliary Control Rooms. The diesel generator feeder voltage is also monitored remotely.

All of this instrumentation is used in testing the diesel generator and in monitoring the 6.9-kV shutdown boards during normal conditions and loss of offsite power conditions.

Remote instrumentation of the 480-volt shutdown boards consists of bus voltmeters and various annunciations all of which are located in the Main Control Room and Auxiliary Control room. This is shown in Figures 8.3-20 through 8.3-23A. All the boards have locally mounted ammeters which monitor the normal and alternate feeders.

Remote instrumentation of the 480-volt motor control centers consists of annunciation in the Main and Auxiliary Control Rooms upon loss of board voltage.

System Reliability

The redundant power trains shown in Table 8.3-1 and Figures 8.1-2a and 8.1-2b have loads connected to corresponding distribution boards in each train such that failure of any one component or the entire power train will not prevent the redundant system

from performing the required safety function. The equipment requiring a.c. power during a loss of offsite power and/or accident condition is supplied from the 6.9-kV shutdown board directly or indirectly through the transformers at a lower voltage. At the 480-volt level each power train has two 480-volt shutdown boards. Each 480-volt shutdown board is supplied power from the 6.9-kV shutdown board through a 2000-kVA, 6900-480-volt transformer. A single spare transformer is provided for the two normal transformers and is manually placed in service when one of the normal transformers is taken out of service for maintenance.

Each 480-volt shutdown board supplies power to a group of motor control centers in addition to the large 480-volt motor loads. A motor control center is normally fed from one of the 480-volt shutdown boards and has an alternate feed from the other shutdown board of the same power train. Manual selection between the normal and alternate feeders is made at the motor control center.

The pressurizer heaters are divided into four groups per unit. Two groups are supplied from each 6.9-kV shutdown board through individual 500-kVA, 6900-480-volt transformers. This is shown on Figures 8.3-16 through 8.3-19.

Equipment Identification

Redundant major electrical equipment carries the same name in each power train with the exception that the board designation also has either -A or -B suffix depending upon the power train assignment. For example, 6.9-kV shutdown board 1A-A and 6.9-kV shutdown board 1B-B are redundant to each other. Similar designations are used for safety-related loads being supplied from safety- related (onsite) boards. For example, RHR (Residual Heat Removal) pump 1A-A and RHR pump 1B-B are redundant to each other. Further description of the equipment identification scheme used appears in Section 8.3.1.4.5.

Equipment Capacities

Tables 8.3-4 through 8.3-7 present the bus rating, connected load, and maximum demand load for each electrical distribution board in the standby (onsite) power system. The connected load and maximum demand load for each major transformer in the standby (onsite) power system is given in Table 8.3-8. The diesel generator rating is 4400 kW continuous or 4840 kW for two hours out of 24 at a power factor of 0.8.

The equipment capacities used in Tables 8.3-2 through 8.3-8 are based on contract data or, when contract data is not available, typical data compiled from vendor literature and industry standards. Section 8.3.1.2.1 pertaining to the a.c. power system analysis will discuss the adequacy of the components in the system.

System Control Power

Table 8.3-9 shows the vital 125V d.c. control power sources for each onsite shutdown board. Each board has a normal and emergency (or backup) control bus, with each but having access to two 125V batteries by way of a manual transfer switch located in the boards. The normal control bus supplies power for Main Control Room operation.

The emergency control bus supplies power for Auxiliary Control Room operating modes. This is shown on Figures 8.3-16 through 8.3-23A.

The control power for onsite motor control centers is single phase 120V a.c. supplied either from the center's own bus through a 480-120V transformer or from each individual load feeder through a 480-120V control power transformer.

System Testing

Located adjacent to each 6.9-kV shutdown board is the 6.9-kV shutdown relay logic panel equipped with the necessary selector switches, pushbutton switches, and indicating lights for testing the automatic load stripping and load sequencing logic for that particular power train. The tests are to be performed on only one of the four power trains per plant at any one time. Testing of one power train does not prevent the remaining power trains from performing their intended safety function.

Testing of the onsite power distribution system is divided into three categories:

(1) Simulated "Loss of Preferred Power" test.

(2) Group tests for equipment that can be tested during power operation.

(3) Group tests for equipment that cannot be tested during power operation.

Test 1 can be performed at any time since no equipment is actually operated and the test does not prevent an accident signal from performing the intended function. Indicating lights are used to verify the test.

Group tests (test 2) during power operation for testable type equipment will only be performed when the system parameters will permit the starting, stopping, and restarting of the loads within the power train under test. The testing of one group of functions within a power train does not prevent the other groups within the same or redundant power train from performing their intended safety function in the event of a simultaneous accident and/or loss of offsite power signal.

Group tests during power operation for nontestable type equipment will only be performed when the system parameters will permit blocking of the functions within the group under test. The testing of any one train does not prevent operation of any other train or redundant train in the event of a simultaneous accident and/or loss of preferred power.

Figures 8.3-6 through 8.3-13 show a schematic representation of the ability to test groups as described above.

Standby Diesel Generator Operation

The diesel generator system is shown on single line diagram, Figure 8.3-24. The schematic of the engine start and stop circuits is shown in Figures 8.3-25A through 8.3-29E. Remote control of the engine from the Main Control Room is accomplished

through interposing relays located in the diesel building. The schematic for this control is shown in Figure 8.3-29A through 29E.

The 6.9-kV shutdown boards in each power train derive power from preferred power from CSST C and D or from their respective standby power source. During conditions where the preferred (offsite) source is not available, each 6.9-kV shutdown board is energized from a separate standby diesel generator set.

A loss of voltage on the 6.9-kV shutdown board starts the diesel generator and initiates logic that trips the supply feeder breakers, all 6.9kV loads except the 480-V shutdown board transformers, and the major 480-V loads. The bypass breaker for the 480-V shutdown-boards current-limiting reactor is also closed as part of this logic. Table 8.3-2 shows the loads that are automatically tripped. When the diesel generator set has reached 850 RPM or greater and not less than 95% of rated voltage, it is automatically connected to the 6.9-kV shutdown board bus. The return of voltage to the 6.9-kV shutdown bus initiates logic which connects the required loads in sequence. In addition, each of the 480V Shutdown Boards has the necessary logic to trip the respective CRDM and Lower Compartment cooling fans supplied from the board and safety related MCCs have the logic to trip selected non-safety related loads. Table 8.3-3 shows the order in which loads are applied.

As shown in Table 8.3-3, there are two loading sequences. One, which is applied in the absence of a "safety injection signal (SIS)," the "nonaccident condition," and the other, the "Accident condition," applied when a safety injection signal is received prior to or coincident with a sustained loss of voltage on the 6.9-kV shutdown board. A loss of offsite power coincident with a safety injection signal is the design basis event; however, a safety injection signal received during the course of a nonaccident shutdown loading sequence will cause the actions described below:

(1) Loads already sequentially connected which are not required for an accident will be disconnected.

(2) Loads already sequentially connected which are required for an accident will remain connected.

(3) Loads awaiting sequential loading that are not required for an accident will not be connected.

(4) Loads awaiting sequential loading that are required for an accident will either be sequentially loaded as a result of the non-accident loading sequence or have their sequential timers reset to time zero from which they will then be sequentially loaded in accordance with the accident sequence. Refer to Section 8.1.5.3 for the degree of compliance to Regulatory Guide 1.9.

A safety injection signal received in the absence of a sustained loss of voltage on a 6.9-kV shutdown board will start the diesel generators but will not connect them to the shutdown boards. There are no automatic transfers of shutdown boards between standby power supplies in compliance with Regulatory Guide 1.6.

The events which initiate a safety injection signal are discussed in Chapter 7.

For test and exercise purposes, a diesel generator may be manually paralleled with a normal or alternate (offsite) power source. A loss of offsite power will automatically override the manual controls and establish the appropriate alignment.

The diesel can be started by manually operated emergency start switches located on the unit control board in the MCR and Auxiliary Control Room. (The diesel also has a local manual start switch as well as remote start from the MCR for test purposes). Automatic starting is from an accident signal or a loss of voltage or degraded voltage signal. All automatic and emergency start signals operate to deenergize a normally energized control circuit. These signals also operate a lockout relay that removes all manually operated stop signals except emergency stop, all protective relaying on the generator except generator differential and engine overspeed. The lockout relay must be manually reset to return the D/G to its standby alignment at the diesel generator relay panel in the diesel building or the ADGU Building. A local idle start switch is provided by the diesel manufacturer to start and run the engine at idle speed for periods of unloaded operation. The mode selector switch in the main control room must be in the local mode for the local idle-start switch to be enabled. The local idle-start-switch circuitry has normally open relay contacts from the normally energized control circuit that is deenergized by the automatic or emergency start signals. Therefore, during idle operation, any automatic or emergency start signals will disable the idle start circuitry and will command the engine to go to full speed. As part of the diesel generator testing required by Plant Technical Specifications, proper function of this bypass circuit is ensured.

Internal combustion engines operate most reliably at the rating for which they are designed. At extended light load operation, lube oil can be expected to accumulate in the exhaust system.

Per manufacturers recommendations, after four hours of operation at less than 30% load, the diesel generator is run at a minimum of 50% load for at least 30 minutes.

At synchronous speed and loads less than 20-percent (20%) of rated, a 3000 hour cumulative time limit has been placed on turbochargers. Between 20 percent (20%) and 50 percent (50%) load, there is 6000-hour cumulative time limit. After the time limit has been reached for a particular load level, this component will be replaced. If a unit is to be run in both the above load ranges, the 3000-hour time limit will be used.

In general, after starting, the diesel generators will continue to run until manually shutdown. However, there are protective devices installed to shutdown a diesel generator automatically to prevent heavy damage in the event of a component malfunction. These protective devices are listed below. Protective devices marked with an asterisk (*) are operative at all times while the others are operative only during the test mode of operation. These devices must be manually reset before the engine can be restarted. The status and operability of the trip bypassed circuits can be tested and abnormal values of all bypassed parameters are alarmed in the Control Room.

Generator

phase balance relay
reverse power relay
generator differential relay*
loss of field relay (there is no loss of field relay in the ADGU protection scheme)

Engine

overspeed switch (*)
Crankcase pressure switch
low lube oil pressure switch
high water jacket temperature switch

Only one diesel is in the test mode at any one time unless both units are in cold shutdown; then, both diesel generators of the same train may be in test. One diesel generator may be stopped by its protective devices without jeopardizing the safe shutdown of a unit during all postulated design basis events. The protective devices will prevent excessive damage to a diesel generator and plant personnel will be able to return the diesel generator to its operating state with a minimum of outage time. Also, the additional diesel generator is available to be substituted.

The diesel can be stopped by manually operated emergency stop switches located in the Main Control Room, Auxiliary Control Room, and on the diesel control panel in the diesel building or ADGU Building. A manual stop switch is provided in the Main Control Room for stopping the engine under normal conditions. Under accident or loss of offsite power conditions this stop switch is automatically disconnected from the stop circuit. The normal stopping of the engine will position the hydraulic governor at the lower limit and allows the engine to run for 10 minutes at idle speed (450 rpm) before bringing the engine to zero speed.

Emergency stopping bypasses this 10 minute idle speed time and brings the engine directly to zero speed. Should an emergency start signal be initiated during the 10 minutes idle speed time of a normal stop condition the engine will automatically return to synchronous speed and emergency operation.

Diesel engine speed may be manually controlled remotely from the Main Control Room while the diesel generator is being operated unloaded. During testing when the diesel generator unit is connected in parallel to one of the offsite power supplies, the diesel loading may be varied by use of the speed control switch or voltage control switch. When in the test mode, an accident start signal will automatically trip the diesel generator supply breaker and switch the diesel generator unit to the operate mode.

A "Local-Remote" manual selector switch, located in the diesel generator building (or ADGU building) must be in the "Remote" position for all manual remote control from the control room to be in effect, with the exception of emergency start. Similarly, for the manual controls located in the diesel building (or ADGU building) to be in effect the switch must be in the "Local" position. The switch is manually operated from the

"Remote" to the "Local" position. This operation, however, requires an electrical permissive interlock signal initiated from the Main Control Room. These operations are shown in Figure 8.3-24.

Diesel Generator Description

Each diesel-generator set is furnished by Power Systems-A Morrison-Knudsen Division and consists of two 16-cylinder engines (EMD 16-645E4 or E4B) directly connected to a 6.9-kV Electric Products generator. The continuous rating of each set is 4400 kW at 0.8 power factor, 6.9-kV, 3-phase, and 60 Hz. Each diesel-generator set also has an additional rating of 4840 kW for two hours out of 24. The normal operating speed of the set is 900 rpm. The diesel-generator set uses a tandem arrangement; that is, each set consists of two diesel engines with a generator between them connected together to form a common shaft. The five generator sets are physically separated, electrically isolated from each other, and located above the water level of the probable maximum flood.

Governor Control of the Diesel-Generator Sets

The governor consists of the following:

(a) Woodward EGB-13P actuator on each engine.

(b) 2301 Computer (reverse biased).

(c) Frequency pickup.

The Woodward EGB-13P actuator used with the 2301 computer is a proportional governor which moves the fuel rack in inverse proportion to the voltage signal from the computer. There is a governor actuator on each engine and they are electrically connected in series so that the loss in signal to one would also be the loss in signal to the other. Based upon the input from the generator, the electronic network sends electric signals to the actuators on the two engines. This signal goes to the coils of each actuator that are connected in series so that each coil sees the same electric signal. The terminal shaft of each actuator will move exactly the same amount for each change in signal. This means that the fuel control shaft movement on each engine will be identical.

Attached to the fuel control shaft through an appropriate linkage is an injector rack for each cylinder which by its position meters the fuel injected into its cylinder. This rack is set with a standard factory gauge so that each cylinder will receive the same amount of fuel. Each injector rack is spring loaded to prevent any single injector that may stick from affecting the remaining racks on that engine.

Two devices produce alarm signals should the two engines of a diesel-generator set receive different amounts of fuel. One of these devices is a synchro device that gives an alarm signal should the difference in the actuator control positions for the two engines exceed a certain tolerance. The other such device is an exhaust temperature difference alarm.

The mechanical governor is set to control the unit speed at a higher rpm than the 900 rpm of the electrical governor but below the mechanical trip point. Since the electrical system is reverse biased, a failure in the electrical system would cause the engine speed to increase until it reached the setpoint of the mechanical governor and at that point the mechanical governor would control the engine.

Diesel Generator Auxiliaries

The four diesel generator auxiliaries are supplied power from the 480V diesel auxiliary boards located in the diesel building on 760.5 (see Figure 8.3-4). These boards and loads are shown on Figures 8.3-30 and 8.3-31. The additional diesel generator unit (ADGU) auxiliaries are powered from the 480V diesel auxiliary board located in the ADGU building on elevation 760'-6".

This board and loads are shown on Figures 8.3-30A and 8.3-31A.

Diesel Fuel Oil System

The diesel engine fuel oil system for each unit consists of a day tank for each engine of the tandem pair holding approximately 550 gallons of fuel and four interconnected tanks embedded in the diesel building foundation floor which hold more than a seven-day supply. Transfer of fuel between the seven-day supply tanks and the engine day tanks is accomplished automatically by electrically driven pumps controlled by float-operated switches which sense fuel level in the engine day tanks. Either of the pumps can supply fuel to both tanks (see Figure 8.3-32). Transfer of fuel from outside the diesel building to the seven-day storage tanks is accomplished by manually controlled pumps which can supply fuel from two large storage tanks located near the storage yard or from railroad tank car or truck tanker piping connections. All of these transfer pump motors are supplied power from 480V diesel auxiliary boards except the pump for pumping from the rail-truck tanker inlet (see Figure 8.3-32). The fuel storage system that supplies the day tanks is described in Section 9.5.4.

Diesel Cooling System

Cooling water for engine heat removal is supplied from the essential raw cooling water system by way of two motor-operated valves piped in parallel to redundant cooling water headers.

The valves will open automatically upon receipt of a speed switch signal indicating that the engine is at 40 rpm or greater if or whenever power is available. All signals to close these valves must be manually initiated (see Figure 8.3-35). The power supply for these valves as well as the circulating oil pump and heater is the 480V diesel auxiliary board.

The detailed description of the cooling system for a diesel engine is given in Section 9.5.5.

Diesel Air Starting System

The actual cranking power to the engine is by compressed air motors which mechanically engage with the flywheel tooth and turn the engine drive shaft.

Four pairs of air motors are provided on each of the generator sets (total of eight air motors per diesel-generator) for cranking power. The air motors are paired (two pairs per engine) and any two pairs provide sufficient cranking power to start the unit. Under normal conditions, all eight air motors are used to crank the tandem engines. A speed switch is used to shut off the compressed air to the motors when the engines reach a speed of 200 rpm.

The diesel generator air starting system is completely described in Section 9.5.6.

Diesel Servicing

A local switch at each diesel-generator set is provided that cuts out the remote starting equipment while the set is being serviced. A contact of this switch actuates an annunciator in the Main Control Room when the switch is not in the automatic start position.

Diesel Generator Lubrication System

A complete description of the diesel generator lubrication system is given in Section 9.5.7.

Each diesel engine has an oil circulating pump and water heater for use while the engine is not running. The oil is continuously circulated and held at a relatively constant temperature while the engine is stopped in anticipation of a required fast start (see Figure 8.3-33, 33A, 33B and 33C).

Diesel Generator Instrumentation

Instrumentation consists of voltmeters, wattmeters, varmeters, ammeters, and annunciation display panels located in the MCR, Auxiliary Control Room, and locally in the Diesel Generator Building and the ADGB. The instrumentation is not essential for automatic operation of the diesel.

Diesel Generator Control Power

There are five diesel generator battery systems, one per diesel generator. Each system is comprised of a battery, battery charger, distribution center, cabling, and cable ways. The battery provides control and field-flash power when the charger is unavailable. The charger supplies the normal dc loads, maintains the battery in a fully charged condition, and recharges (480V ac available) the battery while supplying the required loads regardless of the status of the plant. The batteries are physically and electrically independent. They are ungrounded and have ground detection instrumentation.

The battery has sufficient capacity when fully charged to supply required loads for a minimum of four-hours following a loss of normal power. Battery capacity design

requirements consider minimum required voltage for loads and the effects of aging and ambient temperature. Each battery is normally required to supply loads only during the time interval between loss of normal feed to its charger and the receipt of emergency power to the charger from its respective diesel-generator. The batteries, comprised of 58 cells, have adequate capacity considering the minimum terminal voltage of 105 volts and derating for 50°F temperature and aging.

The normal supply of dc current to the battery boards is from the battery charger. Each charger maintains a floating voltage of approximately 130 volts on the associated battery board bus (the battery is continuously connected to this bus also) and is capable of maintaining 135 volts during an equalizing charge period (all loads can tolerate the 135-volt equalizing voltage). Each charger has access to a normal and alternate ac supply (see Figures 8.3-30 and 8.3-31, typical), from the two respective 480V a.c. diesel generator auxiliary boards. If the normal circuit is unavailable, the alternate circuit is selected by a manual transfer. The charger is a solid-state type which converts a 3-phase 480V ac input to a nominal 125V dc output having a rated capacity of 20 amperes. Over this output current range the dc output voltage will vary no more than ±1.0% for a supply voltage amplitude variation of ±10% and frequency variation of ± 2.0%. Some operational features of the chargers are: (1) an output voltage adjustable over the range of 125 to 135 volts, (2) equalize and float modes of operation (the charger normally operates in the float mode at 130 volts, but can be switched to the equalize mode with an output of 135 volts, (3) a current-limit feature which limits continuous overload operation to 140% of rated output. (4) protective devices which prevent a failed charger from loading the battery. (5) metering and alarm circuits to monitor the charger output.

The diesel-generator 125V dc control and field flash circuits are supplied power from their respective dc distribution panels located in each diesel generator room. A typical panel and its associated loads are shown on

Figure 8.3-55. Each circuit (including the battery charger input to the panel) is protected by a thermal-magnetic circuit breaker. The battery input circuit to the panel is protected by a thermal-magnetic circuit breaker and a coordinated fuse.

Prior to placing the 125V dc diesel generator battery system into service, the system components will be tested to ensure their proper operation. The diesel-generator batteries will be preoperationally tested for the following conditions:

(1) To verify that the diesel generator battery capacity will meet the manufacturer's guaranteed performance.

(2) To verify that the diesel generator battery system has the ability to supply power during loss of the 480V ac power supply to the diesel generator battery charger for the design discharge period.

(3) To verify that the battery charger will recharge the diesel generator battery to the nominally fully charged condition while supplying power to the normal control loads.

In order to verify proper operation of the diesel generator battery system the following items are alarmed in the main control room MCR for each system: low and/or loss of battery charger output voltage, loss of 480V ac supply to the battery charger, blown fuse indication on the battery main fuses, battery main breaker open, battery discharge, battery bus overvoltage, battery system ground detection, and battery system distribution breaker open alarm (with exception of the battery charger tie breaker, which is monitored indirectly via the battery discharge alarm). Also, the MCR alarms are supplemented by the following local meter and alarms: battery and charger output current, battery and charger output voltage, and battery system ground detection. Refer to Figure 8.3-24 for further clarification on these items.

Analysis of Diesel Generator 125-Volt dc Control Power System

The diesel generator 125V dc control power system is designed to comply with requirements set forth in GDCs 2, 4, 5, 17, and 18. The design also conforms with Regulatory Guides 1.32 Revision 2, 1.6 Revision 0, and 1.155, Revision 0, and IEEE Std. 308-1971. Elsewhere in this chapter, Regulatory Guide 1.32 Revision 0 is the committed and met revision level. References in the text without revision level indicated is construed to be Revision 0. The following paragraphs discuss each of the requirements:

General Design Criteria 2 and 4

The diesel generator 125V dc control power system is comprised of five physically and electrically independent battery systems (see Figure 8.3-1). These systems are located in the associated diesel generator room which is a seismic Category I structure. This structure will provide protection from the effects of tornadoes, tornado missiles, and external floods.

All components of this system are seismically qualified and have been designated as Class 1E equipment. (Refer to Section 3.11.)

General Design Criteria 5

The five diesel generator 125V dc battery systems are located in individual rooms with the associated diesel generator. Each room is equipped with its own heating and ventilating system independent of the other battery rooms and each room is separated from the others by missile and fire barrier-type walls (see Section 9.5.1). Also, as stated above, the five battery systems are electrically independent (one per diesel-generator set). Therefore, the structures, systems, and components important for safe operation are not shared.

General Design Criteria 17

The diesel generator 125V dc battery system's design, equipment location, separation, redundancy, and testability enables the standby power system to perform its intended safety function assuming a single failure.

General Design Criteria 18

The diesel generator 125V dc battery system is designed to permit appropriate periodic inspection and testing of important areas and features, in order to assess the continuity of the system and the condition of its components. In addition, prior to placing the system into service, it will be preoperationally tested and thereafter periodically tested to ensure the proper operation of all components.

Also, under conditions as close to design as practical, the full operational sequence that requires the battery system's operation will be tested as a part of the diesel generator periodic system testing program.

Regulatory Guide 1.32, Revision 2

The diesel generator 125V dc battery system's chargers have the capacity to continuously supply all steady-state loads and maintain the batteries in the design maximum charged state or to fully recharge the batteries from the design minimum discharge state within an acceptable time interval, irrespective of the status of the plant during which these demands occur. In addition, a capacity test will be performed periodically on each diesel generator battery system, as recommended by IEEE 450-1980.

Regulatory Guide 1.6, Revision 0

Each of the diesel generator battery systems supply power only to the loads of the diesel generator with which it is associated. Therefore, the battery systems' safety loads are separated into redundant load groups such that loss of any one group will not prevent the minimum safety functions from being performed. Also,there are no provisions for manually or automatically interconnecting the redundant load groups of this system.

Regulatory Guide 1.155, Revision 0

Each of the diesel generator battery systems has sufficient capacity to supply required loads for the four-hour station blackout period. The batteries are periodically tested in accordance with the Technical Specifications to assure adequate capacity is maintained.

IEEE Std. 308-1971

As discussed in the above paragraphs, the overall system design of the diesel generator 125V dc control power system incorporates appropriate functional requirements, redundancy, capability and surveillance in order to meet the intent of this criteria. In addition, the system design is such that the battery is immediately available during normal operations and following loss of power from the alternating-current system. Also, each battery has sufficient capacity to meet the power demand and time requirement of each connected load.

Prior to placing the 125V dc diesel generator battery system into service, the system components will be tested to ensure their proper operation. See the discussion under "Diesel Generator Control Power" for a test description.

Diesel Generator Capacity

In compliance with Regulatory Guide 1.9, Rev. 3, the table below compares worst case loading of the diesel generators with their continuous rating and their 2-hour rating. Worst case loading occurs for a simultaneous loss of offsite power and a loss-of-coolant accident on the unit the diesel is associated with. Adequate margin exists between worst case loading and diesel capacity. To satisfy the continuous rating, it may be necessary for operator action to remove certain loads not required for accident mitigation within 2 hours of starting a diesel.

	Diesel Generator			
	1A-A	1B-B	2A-A	2B-B
Worst Case Loading(kW)*	4400	4400	4400	4400
Short Time (2-hr) rating (kW)	4840	4840	4840	4840
Continuous rating (kW)	4400	4400	4400	4400
Cold Dead Load Pickup @ 95EF (kW)	4446	4446	4446	4446
Hot Dead Load Pickup @ 95EF (kW)	4995	4995	4995	4995

The worst case loading is less than or equal to the diesel generator rating.

Diesel Generator Operational Testing

The operational testing of the diesel generator is accomplished from the diesel generator control panel located in the powerhouse Main Control Room. Full load test on a unit requires that the unit be paralleled with the offsite power system. Should a loss of offsite power occur while in the test mode, the diesel generator will switch to the emergency mode of operation with one exception. The diesel generator will remain in the testing mode if the 6.9 kV shutdown board's power feed is through the alternate feeder. In this case, the diesel generator's instantaneous overcurrent relays are active.

Tripping of the diesel generator feeder breaker:

(1) Places the diesel generator in an automatic asynchronous mode of operation.

(2) Creates a loss of offsite power condition on the 6.9-kV shutdown board which will initiate its load shedding logic.

(3) As soon as the offsite power supply feeder breaker to the 6.9-kV shutdown board is tripped and the under voltage load stripping relays operate, the diesel generator feeder breaker to the board will close and initiate the load sequencing logic.

Fuel Consumption Tests

Each unit was loaded at loads of 1666.5, 3333, and 5000 kW at .8 pf, and the time to consume 100 pounds of fuel was recorded. The duration of the test at each load after temperature stabilization was 1/2 hour with the time to consume 100 pounds of fuel varying from 5 minutes 41 seconds at 1666.5 kW to 2 minutes 28 seconds at 5000 kW.

Transient Tests

Full load transient tests were made to verify that voltage and frequency transient characteristics of the system. Loads of 4400 kW and 4750 kW at 0.8 pf were picked up and dropped three times, each with the following characteristics results:

	Peak Freq. Change %				
Load change	Unit 1	Unit 2	Unit 3	Unit 4	Unit 5
+4400 kW	-1.6	-1.3	-1.3	-2.0	-2.5
-4400 kW	+1.6	+2.0	+1.3	+1.8	+1.3
+4750 kW	-1.6	-1.6	-1.3	-2.5	-3.2
-4750 kW	+2.0	+1.6	+2.0	+2.3	+2.3

	Peak Voltage Change %				
Load change	Unit 1	Unit 2	Unit 3	Unit 4	Unit 5
+4400	-6.0	-6.9	8.7	-13.0	-2.1
-4400	+6.0	+8.7	+10.4	+10.4	+2.6
+4750	-6.0	-8.7	-8.7	-17.4	-2.1
-4750	+6.0	+8.7	+10.4	+13.0	+3.0

72-Hour Tests

The units were tested at rated voltage, rated frequency at a load of 4750-kW, 0.8 pf for 72 hours with engine and generator readings being recorded every half hour.

Demonstration of Equivalent Reliability

Regulatory Guide 1.6 requires that for multiple prime movers driving a single generator, the applicant demonstrate a reliability equivalent to that of a single generator driven by a single prime mover. Accordingly, a testing program was carried out to demonstrate the capability of the diesel generator units to start from cold ambient conditions and accept at least 50 percent of the 30-minute rating within the design time limit of 30 seconds from diesel start signal. There were 306 cold starts successfully completed. There were seven void tests due to operator error or test stand

malfunction. There were no failures. Refer to Sequoyah Nuclear Plant FSAR, Section 8.3.1.1, for the reliability test description.

During the tests, a minimum 2500-kW load was applied within 11 seconds after the start signal. The voltage and frequency stabilized within 13 seconds after the start signal.

This test was conducted following the completion of the 72-hour test run specified in the contract. The 300 cold starts were made on the first two units (150 starts per unit). The remaining two units were subjected to 25 consecutive starts as specified in the original contract.

120V Vital AC System

The configuration of the a. c. control power system for both nuclear units is shown in Figure 8.1-3. Each unit has four identical power channels (designated as Channels I, II, III and IV), with the equipment of each channel being electrically and physically independent from the equipment of other channels. Each channel consists of an inverter and a distribution panel which facilitates load grouping and provides circuit protection. Each channel has access to a normal, a standby, and a maintenance supply. The ac control power system is grounded.

Physical Arrangement of Components

The eight inverters are located in the Auxiliary Building at elevation 772. The Channels I and II inverters are located in the Unit 1 area and the Channels III and IV inverters are located in the Unit 2 area. The Channels I and II inverters are separated from Channels III and IV inverters by an 8-inch reinforced concrete wall, extending to the ceiling. The Channel I and the Channel III inverters are separated from the Channel II and the Channel IV inverters respectively by a distance of 60 feet. The physical arrangement of the inverters is shown on Figure 8.3-36.

System Reliability

The system incorporates features which serve to increase the overall reliability. Each channel has access to three power sources: a 480V ac source, a 125V dc source, and a 120V ac maintenance source. Each inverter has a solid-state transfer switch between the 480V ac and 125V dc sources. An automatically synchronized manual transfer between the output of the inverter and the 120V maintenance supply is provided so that the inverter may be taken out of service for maintenance without interrupting power to the loads. The current limiting feature of the inverter provides self-protection from load faults. The inverter and instrumentation power board are monitored to alert the operator of abnormalities. The distribution bus is sectionalized with coordinated fuses to prevent losing the entire board due to failure of a single branch circuit breaker.

Loads

Each channel supplies the following types of loads: reactor protection system, reactor systems instrumentation, separations and interlock relay panels, and other panels and

equipment associated with reactor instrumentation and control systems. Figures 8.3-37 through 8.3-40 list the loads on each instrument power board and identify the safety and nonsafety-related loads. The capability of the inverter to supply its connected load is discussed in Section 8.3.1.2. Nonsafety-related loads are supplied from Class 1E circuit breakers located on the Class 1E instrument power board to provide qualified fault isolation.

Loads are assigned to each channel according to its divisional separation requirement. Those loads requiring four divisions of separation are assigned to the four channels. Those loads requiring two divisions of separation are assigned to channels I and II (Trains A and B, respectively) for unit 1 and channels III and IV (Trains A and B, respectively) for unit 2. The auxiliary feedwater pump turbines' components powered by this system, receive power from either channel III or IV for unit 1 and channels I and II for unit 2. Loads which do not require divisional separation are assigned among the four channels of each unit.

Inverter

The normal supply of ac power to the distribution panels is from the inverter for each channel. The inverter consists of three major subassemblies: a dc power supply, an auctioneering circuit, and an inverter circuit. The dc power supply converts the 480V ac normal inverter input to direct current. The auctioneering circuit accepts the dc power supply (normal supply) and battery (emergency supply) inputs and permits a switchless bidirectional transfer between them in the event of 480V ac supply failure and restoration. The dc output of the auctioneering circuit is converted to ac by the inverter circuit.

AC power input for each inverter is derived from the station auxiliary power system (see Figure 8.1-3) via two physically and electrically independent circuits. Each circuit has access to a preferred (offsite) and a standby (onsite) source. If the normal circuit supplying an inverter is unavailable, the other circuit is selected by a manual transfer. The emergency dc power input for each inverter is from the corresponding channel dc distribution panel.

The inverter is a solid-state type which converts 3-phase 480V ac and 125V dc inputs to a nominal 120V ac output having a rated capacity of 167 amperes (125 amperes, Unit 2) for load power factors from 0.8 to 1.0. Over this output current range, the ac output voltage does not vary more than 2.0% for normal 480V ac supply voltage amplitude variations of 10% and frequency variations of 2.0%, and an emergency supply voltage variation from 102V dc to 140V dc. The output frequency regulation is 60 Hz +0.5 Hz with a harmonic distortion of 5% and a maximum rate of change of 1.0 Hz per second.

Some operational features of the inverters are: (1) an output voltage adjustable over the range of 115V to 125V, (2) synchronization to an external 120V ac maintenance supply, (3) an output frequency adjustable over the range of 58 to 62 Hz, (4) a current-limit feature which limits short circuit currents to 200% rated output, (5) protection devices which prevent a failed inverter from loading its associated normal

and emergency power sources, and (6) metering and alarm circuits to monitor the inverter output.

Vital Instrument Power Board

The eight vital instrument power boards (four per unit) are located in four separate rooms in the Auxiliary Building at elevation 757. Mounted on each of these boards are: the distribution bus, maintenance supply transfer switch, subdistribution bus fuses, distribution bus disconnect switch, high speed branch circuit breakers, and various instruments for monitoring distribution bus ac voltage. In addition, mounted on boards I-III and I-IV is equipment for supplying the CO_2 fire protection system with a source of ungrounded ac power.

Each branch circuit breaker is coordinated to its subdistribution bus fuse. The purpose of this coordination scheme is to prevent a fault on one branch feeder from causing damage to any branch feeder cable or a lose of the entire board due to a single branch feeder fault.

All of the branch circuit breakers are 100-ampere frame molded-case breakers with alarm contacts to alert the control room operator of an open breaker. The distribution bus is monitored by a panel mounted voltmeter and an undervoltage relay to warn the operator of a loss of distribution panel power.

Tests and Inspections

Prior to placing the vital ac system in operation, the system components will be tested to ensure their proper operation. The inverter will be checked for output voltage and frequency, ability to synchronize to the maintenance supply, transfer between normal and emergency sources, and 100% output delivery while operating on either the normal or emergency supplies. Panel-mounted instruments monitoring the inverter will be calibrated. For the instrument power board, circuit breakers will be tested for proper trip operation using test sets that simulate a fault current, fuses will be checked to verify that the sizes and types specified on the master fuse report have been installed, and the board instruments will be calibrated. During plant power operations the vital 120V ac control power system will be periodically tested and inspected to ensure its continued capability to perform its operation. The inverters will be tested for their capability to transfer between the 480V ac normal power source and the 125V dc emergency power source. The inverter and auctioneering equipment may be removed from service for inspection and test by synchronizing and manually transferring to the maintenance power source. The surveillance instrumentation will provide continuous monitoring of the system.

Vital Power System Load Data

Figures 8.3-37 through 8.3-40 list all loads supplied from the vital ac system. Table 8.3-11 contains a summary of the loading on each vital instrument power board/inverter. The basis for the load data was determined from manufacturer's data. The capability of the vital a.c. system to supply power to its loads is verified by analyses in Section 8.3.1.2.2.

Design Bases and Criteria for Safety-Related Motors, Switchgear Interrupting Capacity, Circuit Protection, and Grounding.

The design bases for safety-related motors are the applicable Onsite Power System design bases listed in Section 8.1.4. In particular, bases 1, 3, 4, 5, and 6 apply to safety-related motors. The criteria which are applied to motor size, starting torque, and insulation are as follows.

Motor Size and Starting Torques

Each motor has adequate capacity and operating characteristics for all conditions of starting and running which the connected equipment may impose.

The motor nameplate horsepower rating is not normally exceeded when the connected equipment is operating at rated capacity. The motor horsepower rating, based on nameplate or vendor data, may be exceeded on a continuous basis up to its service factor rating for specific cases after a design review to ensure that the temperature limits of the insulation system are not exceeded.

Motor Insulation

For most applications insulation is Class B. Motors in areas which are subject to unusual operating conditions either during normal, emergency, or accident operation are designed to be suitable for operation in these environments. These include conditions such as gamma radiation and high humidity, temperature, and pressure.

Interrupting Capacity of Distribution Equipment

The criteria for selecting the interrupting capacity of switchgear are as set forth in ANSI Standard C37.010 for 6900-volt circuits and C37.13, Section 13-9.3.5, for 480V circuits. No circuit interrupter is applied in a circuit where it would be required to interrupt a current exceeding its interrupting rating.

Motors rated at and above 400 horsepower are supplied at 6900 volts. The switchgear interrupting rating is 500 MVA, or a maximum of 41,000 amperes. Motors below 400 horsepower are supplied at 480 volts. The smaller motors, in general 50 horsepower and below, are fed from 480V motor control centers. Larger motors are usually fed from 480V metal-enclosed switchgear (load centers), unless frequency of operation or location of motor relative to a feeder board indicate otherwise. Current-limiting reactors are provided in the 480-V shutdown boards, between the 3200A bus and the 1600A bus, to limit the maximum fault current on the 1600A bus and the load equipment (MCC's, etc). The current-limiting reactors are bypassed when the respective 6.9-kV bus is fed from the standby from the diesel generator is within the equipment's ratings without the use of the reactors. This current-limiting reactor bypass provides acceptable voltage levels at the motor control centers for starting the 460-V motors when the diesel generator supply breaker closes.

Electric Circuit Protection

The auxiliary power system for each unit receives power from unit station service transformers and CSST's C and D. During startup, shutdown, and loss of the power supply to a Unit Station Service Transformer for any reason, the unit boards and the RCP boards will be supplied by the common station service transformers A and B. The shutdown boards will be supplied from CSSTs C and D.

Whether the 6900V shutdown boards are being supplied by their normal sources or alternate sources, the entire ac auxiliary power system, from the station service transformer to the emergency load motor control center electrically farthest from the sources, is a coordinated selective trip system.

Motor feeder protection is selected and set to protect the motor and its cable. It is backed up by the next upstream circuit breaker in the event it should fail to open its circuit under fault. Backup protection will isolate the board feeding the faulted circuit but will not necessarily protect the circuit with the failed breaker against damage.

The 6900V motors are protected by induction-type, inverse-time overcurrent relays specifically designed for protection of large motors. These relays have three individual contacts which respond to motor overloads, locked rotor currents and circuit faults. Motor overload contacts have inverse time-current characteristics with set points between approximately 1.15 and 1.40 times normal full load current. Time levers for motor overload contacts are selected to allow normal motor starts. Motor overloads are alarmed in the main control room. Locked rotor contacts will pickup instantaneously at about 2 times normal full load current. If a relay's locked rotor contact is picked up when the overload contact closes, the motor will be tripped off line. Fault contacts pick up instantaneously for currents above 3 times normal locked rotor currents.

The incoming supply breaker on a 480V switchgear board has an inverse-time, induction-type overcurrent relay. Each motor feeder breaker has a static-type overcurrent relay with long time and instantaneous settings. The instantaneous current setting is for short-circuit protection and is selected as approximately twice the locked rotor current to avoid nuisance tripping on inrush starting current. The long-time current setting is for motor overload protection and is slightly above the full-load current at rated service factor; the long-time delay setting is chosen to permit locked-rotor current for the accelerating time, if known, or according to the switchgear vendor's recommendation.

Each motor control center feeder breaker on the 480V switchgear board has a long-time setting and a short-time setting. These settings are selected such that the complete tripping time-current curve when plotted on coordination paper will be above the curve of the molded-case circuit breaker for the largest motor fed from the motor control center. This molded-case circuit breaker provides short-circuit protection. Motor overload protection is provided by overload heater elements in the motor starter. The incoming breaker in the motor control center is nonautomatic and thus has no trip settings.

Grounding Requirements

The 6900V secondary winding of each unit and common station service transformer is wye-connected, with the neutral grounded through a resistor which will limit ground fault current to 1600 amperes maximum. The neutral resistor serves to prevent overvoltage on the winding which could occur in the event of a ground fault if the 6900V system were not intentionally grounded. Since there is a deliberate ground current path, each 6600V motor and transformer feeder circuit is protected by ground overcurrent relays which will trip that circuit's feeder breaker. The common station service transformer neutral resistor has an overcurrent relay which will trip the 161-kV breakers which supply that transformer from the 161-kV system. This overcurrent relay is coordinated with the downstream 6900V start buses ground overcurrent relays. This coordination is necessary because each start bus automatically transfers to its alternate supply common station service transformer on low voltage. If a start bus ground fault should cause the common station service transformer to be deenergized before the fault is isolated by start bus supply breakers, the fault may be transferred to the other common station service transformer and cause it to be tripped also.

The ground overcurrent relays for 6900V load feeder circuits are electromechanical type used with a ground sensor current transformer which encircles all three conductors of the feeder cable. Thus the sensor is not subject to errors caused during high inrush currents on motor starting. The ground sensor relay therefore is instantaneous in operation; it can detect ground fault currents as low as 15 amperes. The objective of the sensitivity and speed of this ground protector is to limit the damage to the motor iron in the event of a ground fault. The ground fault current level of 1600 amperes has been successfully used in TVA projects for at least 15 years. This fault level is selected because it is large enough to enable early detection and low enough to prevent excessive damage before fault clearing by the feeder breaker.

The diesel generator is 6900V, 3-phase, wye-connected with the neutral grounded through a relatively high ohmic resistance to keep ground fault currents to a low level. The maximum ground fault current available from the diesel generator is approximately 8 amperes. Ground faults are detected by a voltage relay across the neutral grounding resistor. Grounds cause an alarm but do not cause any breaker operation.

The Class 1E 480V systems are supplied through Δ-Δ transformers that are not grounded. This permits minimum disturbance to service continuity. Ground detectors are provided on each 480V load center to indicate the presence of a grounded-phase conductor. No ground fault relaying was required since there would be only a very small current flowing to a single-line-to-ground fault. A ground fault on more than one phase is a line-to-line fault and will trip the feeder breakers of the faulted circuits.

Sharing of the AC Distribution Systems and Standby Power Supplies

The onsite ac power distribution system for Watts Bar Nuclear Plant is divided into two divisions or trains in each unit (A and B). Each power train is made up of a 6900V switchgear (6900V shutdown board), 480V power transformers and switchgear, and 480V motor control centers. Each power train, through its 6900V shutdown board, has power connections to a unit generator, both offsite power circuits, and a dedicated

diesel generator. Except for the offsite (preferred) power supplies, there are no ac power connections between the onsite power trains within a unit or between the two units.

Safety systems that are shared between the two Watts Bar units are discussed in Section 3.1.2 under Criterion 5 (GDC-5) - Compliance. Therefore, there are electric motors powered by the onsite distribution system of one unit that drive safety-related machinery (i.e. essential raw cooling water pumps, component cooling system pumps) required for safe shutdown of the other unit. For example, the ERCW system is arranged in two headers (trains) each serving certain components in each unit (see Section 9.2.1.2). There are eight ERCW pumps arranged electrically so that two pumps are fed from each shutdown board (1A-A, 1B-B, 2A-A, 2B-B). Only one pump per board can be automatically loaded on a DGU at any one time. The pumps supplied from the 'A' boards pump into the 'A' train header and likewise the 'B' pumps. The minimum combined safety requirements for one 'accident' unit and one 'non-accident' unit are met by only two pumps on one header (train).

8.3.1.2 Analysis

8.3.1.2.1 Standby AC Power Systems

The standby ac power system is designed to comply with the requirements set forth in GDC 17 and 18. The design also conforms with Regulatory Guides 1.6 R0 and 1.9 R3 and IEEE Std 308-1971. The following paragraphs discuss each of the requirements.

Capacity, Capability, and Margin

General Design Criteria 17

The standby ac power system is designed to provide sufficient capacity and capability to assure that (1) specified acceptable fuel design limits and design conditions of the reactor coolant pressure boundary are not exceeded as a result of anticipated operational occurrences, and (2) the core is cooled and containment integrity and other vital functions are maintained in the event of postulated accidents in one unit and to safely shutdown the other unit.

Regulatory Guide 1.9 R3

Each diesel generator set is capable of starting and accelerating to rated speed and to supply all the needed engineered safety feature and shutdown loads in the required sequence. At no time during the loading sequence does frequency or voltage decrease to less than 95% of nominal and 75% of nominal, respectively. During recovery from transients caused by step load increases or resulting from disconnection of the largest single load, the speed of the diesel generator set does not exceed 115% of nominal. Voltage is restored to within 10% of nominal and frequency within 2% of nominal in less than 60% of each load sequence time interval.

IEEE Std 308-1971

Each distribution circuit is capable of transmitting sufficient energy to start and operate all required loads in that circuit.

A failure of any unit of the standby power source (diesel) does not jeopardize the capability of the remaining standby power sources (diesels) to start and run the required shutdown systems, emergency systems, and engineered safety feature loads.

Diesel fuel storage at the site is sufficient to operate the standby power source (diesels) while supplying post-accident power requirements for seven days.

The total standby power source (diesel) capacity for the plant is sufficient to operate the engineered safety features for a LOCA in one unit and those systems required for concurrent safe shutdown on the remaining unit. No single failure of a standby power source unit (diesel) will jeopardize this capability.

Redundancy

General Design Criteria 17

The onsite ac electrical power sources (diesels) and the onsite electrical distribution system have sufficient independence, redundancy, and testability to perform their safety function assuming a single failure.

Regulatory Guide 1.6, Revision 0

The electrically powered ac safety loads are separated into redundant load groups such that loss of any one group will not prevent the minimum safety functions from being performed.

IEEE Std 308-1971

Sufficient physical separation, electrical isolation, and redundancy is provided to prevent the occurrence of common failure mode in Class 1E systems. The Class 1E system design includes:

(1) Electric loads separated into two redundant load groups.

(2) The safety actions performed by each group of loads are redundant and independent of the safety actions provided by its redundant counterpart.

(3) Each of the redundant load groups has access to both a preferred and a standby power supply. Each power supply consists of one or more sources.

Independence

Regulatory Guide 1.6, Revision 0

The design of the standby ac power system conforms with the independence requirements placed on redundant systems by Regulatory Guide 1.6. These include:

(a) The standby source of one load group cannot be automatically paralleled with the standby source of another load group or with the offsite system.

(b) No provisions exist for automatically connecting one load group to another load group.

(c) No provisions exist for automatically transferring loads between redundant power sources.

(d) Where means exist for manually connecting redundant load groups together, at least one interlock is provided to prevent an operator error that would parallel their standby power sources.

IEEE Std 308-1971

Class 1E electric equipment is physically separated from its redundant counterpart or mechanically protected as required to prevent the occurrence of common failure mode.

Each type of Class 1E electric equipment is qualified either by analysis, successful use under applicable conditions, or by actual test to demonstrate its ability to perform its function under normal and design basis events.

Distribution circuits to redundant equipment are physically and electrically independent of each other.

Auxiliary devices that are required to operate dependent equipment are supplied from a related bus section to prevent the loss of electric power in one load group from causing the loss of equipment in another load group.

Protective devices are provided to isolate failed equipment automatically. Sufficient indication is provided to identify the equipment that is made available.

By means of breakers located in Category I structures, it is possible to disconnect completely Class 1E systems from those portions located in other than Category I structures.

Surveillance and Testability

General Design Criteria 18

Electric power systems important to safety are designed to permit appropriate periodic inspection and testing of important areas and features. In particular, the systems are designed with capability for periodic testing of the operability and functional

performance of the components of the systems, such as onsite power sources, relays, switches, and buses, and also the operability of the systems as a whole. In addition, under conditions as close to design as practical, the full operational sequence that brings the systems into operation will be tested periodically including applicable portions of the protection system, and the transfer of power among the nuclear power unit, the offsite power systems, and the onsite power system.

The distribution system is monitored to the extent that it is shown to be ready to perform its intended function.

Status indicators are provided to monitor the standby power supply continuously. Annunciators are provided in the Control Room to monitor and alarm the status of the standby power supply.

Availability

IEEE Std 308-1971

The standby power supply is available following the loss of both preferred power supplies within a time consistent with the requirements of the engineered safety features and the shutdown system under normal and accident conditions.

8.3.1.2.2 Analysis of Vital 12OV AC Control Power Systems AC Distribution Boards and Inverters

General

The 120V ac Class 1E electrical systems were designed, components fabricated, and have been or will be installed meeting the requirements of the NRC 1O CFR 50 Appendix A General Design Criteria, IEEE Std 308-1971, NRC Regulatory Guide 1.6, IEEE Std 336-1971, and other applicable criteria as referenced herein.

The system consists of eight uninterruptible power supply (UPS) systems and eight distribution boards, (four of each per unit), cable, and other hardware.

The distribution boards and UPS systems are grouped into four divisions of separation. The boards of each division are located in separate rooms at elevation 757 of the Auxiliary Building which is designed as a Seismic Category I structure. Likewise, the inverters are located at elevation 772 and are divisionally separated. Refer to Section 8.3.1.4.2 for separation conformance.

Since this equipment is outside the primary containment area, it will not be exposed to hostile environments or significant radiation due to a LOCA. The system design, equipment location, separation, and redundancy assure ability to meet the requirements for the applicable accident in Chapter 15 are in full compliance with NRC General Design Criteria 17 and Regulatory Guide 1.6, Revision 0.

120V AC Distribution Boards

All load output circuit breakers used on the boards are high-speed hydraulic-magnetic type having the unique characteristic of high-speed tripping at low-fault currents. This type breaker is capable of providing low-fault current selective tripping when the board power source is from the inverter which has a low-fault current capability. The breakers are fed in groups from a stub bus with a current-limiting fuse that is capable of interrupting the larger fault currents available when the power source is from the alternate ac maintenance supply. The fuses and breakers have current-time tripping characteristics which are coordinated with the load cable thermal characteristics to provide selective clearing of all faults. The exact board distribution circuit and loads can be seen by referring to Figures 8.3-37 through 8.3-40. The total design load for each board is listed in Table 8.3-11.

The buswork within the board is sized electrically to supply the maximum load required and is capable of withstanding the electrical and mechanical forces resulting from the maximum short-circuit current available.

The normal or preferred power source to each distribution board is from its associated inverter system. A maintenance source is available from the 120-volt ac instrument power supply which is derived from the 480-volt ac shutdown board system. The input power is delivered to the main bus via a manually operated transfer switch. The switch has make-before-break contacts that permit transferring the bus feeder from either source while maintaining circuit continuity.

Uninterruptible Power Supply (UPS)

The UPS delivers the required ac power via a 2-wire, 120V circuit. The electrical characteristics of the UPS units are sized and coordinated to maintain the required inverter output for the worst maximum or minimum operable input conditions. Each UPS system is capable of delivering 167 amperes continuously (125 amperes for Unit 2) which is adequate to meet the maximum design load requirement. A non-automatic molded-case breaker with a current limit fuse in the inverter output circuit provides thermal overload protection as well as short-circuit protection from the station maintenance supply in the event an internal fault should occur at the instant the normal supply is being switched off and the maintenance supply switched on.

The normal ac input power is derived from either one or two 480 volt shutdown distribution boards. The manually operated transfer switch through which the power is delivered is interlocked in such a manner as not to parallel the two shutdown boards in compliance with Regulatory Guide 1.6, revision 0. The dc alternate input power source is derived directly from the dc distribution board. This input is biased against the normal rectified ac input by means of an 'auctioneered' diode circuit to permit use of the battery source only in the event the ac input voltage is lost. Input protective devices for both sources are coordinated and sized in accordance with circuit requirements.

Surveillance and Monitoring

Each distribution board and UPS system is equipped with the proper instruments to provide visual indication of the necessary electrical quantities. All circuit breakers and

fuses are equipped with an alarm contact that closes for a blown fuse or automatic operation of a circuit breaker. Undervoltage alarm relays provide annunciation for loss of power on the buses or power input to the UPS. Closure of any alarm contact provides annunciation in the Main Control Room.

Seismic Qualification

One complete board assembly and one complete UPS system assembly have been subjected to the SSE conditions stipulated in the design criteria for the particular elevation at which they are installed (Refer to Section 3.10). The tests were performed in conformance to IEEE Std 344-1971, Guide for Seismic Qualification of Class 1E Equipment. One or more breakers of each type used on the equipment were operated under simulated fault conditions at the same time the assembly was experiencing seismic forces. Equipment surveillance and alarm components were energized and monitored during the test. The seismic test assures that the complete assembly will continue to function properly and continue to deliver the required power during and after any expected SSE condition.

Design Test

All inverters were electrically tested to assure that each unit is capable of performing all requirements as specified.

All boards were subjected to and satisfactorily passed the following tests as specified under the indicated paragraphs of Section 20-5 of ANSI C37.20-1969:

20-5.3.2 - Mechanical Operation
20-5.3.4.1 - Control Wiring Continuity
20-5.3.4.2 - Control Wiring Insulation

All molded-case circuit breakers comply with NEMA Publication No. AB-1-1964 requirements. All control circuit wiring has self extinguishing insulation rated 600 volts in accordance with paragraph 6.1.3.1 of ANSI C37.20-1969. All equipment is certified to operate within the environmental requirement called for in the design criteria (Refer to Section 3.11). The arrangement of circuit interrupters and switches permits easy isolation of the installed assemblies for future test and maintenance purpose.

8.3.1.2.3 Safety-Related Equipment in a LOCA Environment

Electrical equipment located inside containment has been designed to maintain equipment safety functions and to prevent unacceptable spurious actuations. All power cables feeding equipment inside containment are provided with individual breakers to protect the power sources (both 1E and non-1E) from the effects of electrical shorts. Reactor coolant pumps have two circuit breakers. All other power cables are provided with a cable protector fuse which, in the event of a breaker failure, is designed to protect the containment penetration. These breakers and protector fuses ensure that, should an electrical short occur inside containment, the electrical power source will not be affected.

A failure analysis has been made on the ability of the electrical power (both AC and DC) systems to withstand failure of submerged electrical components from the postulated LOCA flood levels inside containment (see Appendices 8A and 8B). Some of the identified components are automatically deenergized in event of a LOCA. The remaining components that are powered from a Class 1E source were assumed to have a high impedance fault for the analysis. The magnitude of the leakage currents used in the analysis is the maximum value of current that each protective device would carry for an indefinite period, i.e., the protective device's thermal rating. The results of the evaluations indicate that the submergence of electrical components will not prevent the Class 1E electric (either AC or DC) systems from performing their intended safety function for the postulated submerged condition.

A listing of major electrical components located inside containment that may be inundated following a LOCA appears in Table 8.3-28 along with an explanation of the safety significance of the failure of the equipment due to flooding. The components listed in Table 8.3-28 are automatically de-energized by the accident signal, and the accident signal must be reset to remove the automatic trip signal from each component. Testing to ensure the operability of all of the components used in the design for automatic de-energization is performed in conjunction with the test which verifies ESFAS actuation circuitry. Acceptance criteria for this test is that all devices will assume their accident conditions and maintain those conditions after the accident signal is reset. This test is performed every 18 months. In addition to the electrical equipment listed in the table, the water level inside containment may also flood nonsafety-related local control stations, electrical sensors, electric motors for motor operated valves, and electric solenoids for air-operated valves. The flooding of this equipment will not affect the plant safety. All local control stations located inside containment are provided with manual throw switches located outside containment at the motor control center. These manual switches are used to remove control power from the local control stations during normal operation. In order to utilize the local control stations during operating conditions where containment access is permitted, the manual switch must be closed to provide power to the local stations. Indications are provided in the main control room whenever the manual throw switches are in the closed position. Thus, spurious operation of safety-related equipment due to post-LOCA submergence of the local control station is prevented.

There are no electric motor-operated valves located inside containment below the maximum LOCA water level that are required to function for other than containment isolation. Valves used for containment isolation will receive a signal to close on the initiation of the accident signal. The valves will close in 10 seconds and will remain closed since failure of the control circuitry can only yield operation in the closed direction from the motors before the flooding takes place. Therefore, these valves will not be required to operate during or after the flooding.

The control air supply is automatically isolated outside containment in the event of a LOCA. Therefore, the submergence of electric solenoids serving air-operated valves cannot affect the safe positioning of these valves.

The plant operators are instructed to rely on the qualified post accident monitors following a LOCA so that any spurious indications from non-qualified electrical sensors that could become submerged would not jeopardize appropriate operator actions.

The safety-related electrical equipment that must operate in a LOCA environment during and/or subsequent to an accident is identified below.

Inside Primary Containment

Low Voltage Power and Control Cables

The single- and multiple-conductor cables, insulated and jacketed with flame-retardant thermoplastic and thermosetting compounds, are suitable for installation in a nuclear environment.

Auxiliary power, control power, and control cables at voltages not exceeding 600 volts between conductors, either DC or 60 Hertz AC, are insulated with silicone rubber, crosslinked polyethylene, or ethylene propylene rubber. The rated conductor temperature for silicone rubber is 125°C. (For 10 CFR 50.49 applications, the rating is 90°C). The rated conductor temperature for crosslinked polyethylene and ethylene propylene rubber is 90°C. Single conductor silicone rubber insulated cable is jacketed with asbestos, synthetic yarns, or aramid fibers. Single conductor crosslinked polyethylene or ethylene propylene rubber insulated cables are jacketed with chlorosulfonated polyethylene. Single conductors of a multi-conductor silicone rubber insulated cable are jacketed with a glass braid and have an overall jacket of asbestos braid, synthetic yarns, or aramid fibers. Single conductors of a multi-conductor crosslinked polyethylene or ethylene propylene rubber cable are not jacketed, but the multi-conductor assembly does have an overall chlorosulfonated polyethylene jacket.

Signal cable, at voltages not exceeding 600 volts, is insulated with cross-linked polyethylene (or other material meeting TVA approval) and jacketed with chlorosulfonated polyethylene (or other material meeting TVA approval). The conductors are twisted together and then an overall shield (with copper drain wire) applied under the jacket. The conductor temperature rating for signal cable is 90°C maximum.

Electrical Penetration Cables

The cables are derated and sized according to their ampacities for the pene-tration ambient temperatures. The cables have passed tests conforming to IEEE Standards for Electrical Penetration Assemblies in Containment Structures for Nuclear Fueled Power Generating Stations, IEEE 317-1976.

Electrical Penetrations

The electrical penetration assemblies (see Section 8.1.5.3) are designed to maintain containment integrity during all design basis events including temperature rise under fault-current conditions. To assure that electric power is continuously available to operate required equipment, penetrations for redundant cables are located in two or more separate areas in the containment structure.

System Description

There are three basic types of electrical penetrations: medium voltage power, low voltage (power and control), and instrumentation types. Modular type penetrations are used for all electric conductors passing through the primary containment. A double pressure seal is formed within each module through which the conductors pass. The modules are inserted into header plates with factory attached weld rings that are field welded to the outboard end of each containment nozzle. The modules are retained in the header plate by a threaded midlock capnut and are sealed to the header plates with a dual midlock ferrule arrangement except for the high voltage modules which use a double O-ring seal.

To provide suitable termination of cables at the penetration, junction boxes or dead-ended covered cable trays are provided inside containment. These enclosures serve as an electrical splicing box for field connection of conductors.

The penetration assemblies are designed, fabricated, and inspected in accordance with the latest edition at time of contract of the ASME Boiler and Pressure Vessel Code, Section III, subsection NE for Class MC vessels, and are code stamped.

Medium-Voltage Power Penetration Assembly

The medium-voltage penetrations have six 8-kV Kerite insulated, 750 mcm conductors each supported in a scaled 2 1/2 foot tube which is attached to the back of the header plate on the outboard end and a support plate on the inboard end. The conductors are terminated in ceramic bushings at each end. The conductors are scaled at the ends of the bushings with a midlock ferrule. There is a separate Kapton insulated 2/0 conductor for carrying cable shields through the penetration. The pressure retaining boundary includes the weld ring, header plate, bushings, bushing extension tubes, 'O' rings, and midlock ferrules.

Low-Voltage Power and Control Penetration Assembly

Each low-voltage power and control penetration is suitable for 600V ac or less. The cables pass through the header plate and extend beyond each end of the nozzles as pigtails. Cables are terminated either with bolted spade-type connectors or crimp type in-line splices. All low voltage power conductors are insulated with Kapton and are sealed on the steel module shells by dual polysulfone seals.

Instrumentation Penetration Assemblies

Each assembly has either multiconductor, twisted, shielded cables, triaxial cables, coaxial cables, thermocouple cables, or a combination thereof. The multiconductor cables and thermocouple cables are insulated with Kapton and are rated at 600V ac or less. They pass through the header plates and support plates and extend beyond each end of the nozzle as pigtails. The shields are carried through the header plate ungrounded. The multiconductor cables and thermocouple cables are terminated with insulated in line cable splice. The coaxial and triaxial cables are insulated with Kapton and polysulfone. They are carried through the penetration assemblies maintaining

their concentric configuration. The two shields of the triaxial are not grounded or tied together through the assembly.

Qualification Tests and Analysis

Environmental qualification for Class 1E penetrations is addressed in Section 3.11.

Underground Cable Installation

The design and installation of the underground cables conform to the applicable requirements of General Design Criteria 1, 2, 3, 4 and 17 and Section 5.2.1 of IEEE Std. 308-1971. Compliance to the GDC's is discussed in Section 3.1. Also, conformance to GDC 17 and IEEE Standard 308-1971 is discussed in Sections 8.2.1.8, 8.3.1.4, and 8.3.1.2.1.

The Class 1E cables between the auxiliary building and the diesel generator building, and the intake pumping station are installed in Seismic Category I structures. A description of these manholes and duct runs is given in Section 3.8.4.1.5. The Class 1E cables between the diesel generator building and the ADGU building are also installed in Category I structures.

Conduit duct bank runs are generally long runs which can exceed standard cable reel lengths, thus requiring splices. The long runs may also cause cable pull tension to be exceeded unless the pulled length is shortened by splicing shorter cable sections together. Manholes in conduit duct bank runs provide the same function as junction boxes in other conduit runs by providing a cable pullpoint and a location for cable splices. Manholes are enclosed structures with very limited space. The cable tray raceway in the manhole provides support and protection of cables and splices from damage while in manholes. Also, redundant cable divisions are installed either in separate manholes or in the same manhole with a concrete barrier between the divisions. Sump pumps with level switches for automatic pump operation are located in the manholes to prevent water accumulation due to leakage into the manhole. Manholes will be included in the plant maintenance program and will be inspected every 12 months for sump pump operability and flooding.

Cables are designed to operate in wet conditions. The Class 1E cables required to operate the plant in the flooded condition are continuous or provided with a waterproof splice in a manhole. Cables have been tested at the factory by the manufacturer according to TVA specifications, which invoke ICEA (formerly IPCEA) standards for cables installed in wet environments.

Each manhole or cable pull point is accessible for periodic visual inspection of cables during normal operations or preflood conditions for the life of the plant. The duct runs are designed such that inundated testing of redundant cables can be conducted.

TVA does not use directly buried conduit for any Class 1E cable installation. This avoids possible adverse effects if such conduit were to be buried under a roadway.

8.3.1.3 Physical Identification of Safety-Related Equipment in AC Power Systems

The onsite power system equipment and associated field wiring is identified so that two factors are physically apparent to plant operating and maintenance personnel:

(1) That equipment and wiring is safety-related, and

(2) That equipment and wiring is properly identified as part of a particular division of separation.

The scheme used to physically identify safety-related ac electrical equipment employs a suffix label. The suffix label added to the equipment name is -A, or -B, which represents train A or train B diesel-generator power source. For example, 6900V shutdown board 1A-A is safety-related equipment, where the 1 indicates Unit 1, the A represents board A, and the -A is assigned to train A.

The 125V dc vital system is shared between both units and divided into four channels. The 125V vital charger, 125V vital battery board, and 125V vital battery of each channel is physically identified in its label by I, II, III, or IV.

In addition, 125V vital battery V, physically identified in its label by "S", may serve as a temporary replacement for either battery I, II, III, or IV.

The 120V ac vital instrumentation and control power system is divided into four channels. Four each of the 120V ac vital inverters and vital instrument power boards are identified by Unit 1 or 2 prefix and a -I, -II, -III, or -IV suffix, respectively. For example, 120V ac vital instrument power 1-I is safety-related equipment, where the 1 indicates Unit 1, and the -I is assigned to channel I. On line 3.67 of the following paragraph one of the boxes needs to have a diagonal line inserted and the other box needs a shaded diagonal line inserted.

To further physically identify the onsite power system equipment, a color coding scheme is used. Nameplates, tags, or markings on exterior surfaces of this equipment is color coded respective to its division of separation as described in Section 8.3.1.4.5, except in the unit control and auxiliary control rooms. The mimic buses or modules on these boards are color coded by systems. The component nameplates on the boards in these rooms are white background with black characters. To indicate to the operator that a component in these rooms is safety-related, an appropriate symbol is added to those applicable nameplates. The symbol, added in the upper-right-hand corner of the applicable nameplate, is ~ for train A, ~ for train B, S for special, I, II, III, or IV, respectively, for channels I, II, III, or IV components, and C1 for Post Accident Monitoring channels. The physical identification of the field wiring and its raceway (conduit and cable tray) for the onsite power system equipment is described in Section 8.3.1.4.5.

8.3.1.4 Independence of Redundant ac Power Systems

The criteria and their bases which have been used to establish the minimum requirements for preserving the independence of redundant Class 1E electric systems are stated in IEEE-308-1971 and Regulatory Guide 1.6, revision 0. Chapter 17,

'Quality Assurance,' describes the administrative responsibility and control that has been provided to assure compliance with these criteria during the design and installation.

The nuclear power generating station protection system (GSPS) includes the reactor protection system (RPS), Engineered Safety Features (ESF), essential supporting auxiliary systems (ESAS) and Class 1E electric systems. These systems are required for the safe shutdown of the reactor. Redundant systems are provided so that single failures, including failure of a redundant subsystem, will not result in failure to safely shutdown the reactor.

The reactor protection system (RPS) is the overall complex of instrument channels, power supplies, logic channels, and actuators together with their interconnecting wiring, involved in producing a reactor trip.

The Engineered Safety Features (ESF) and essential supporting auxiliary systems (ESAS), as elements of the nuclear power generating station protection system, are the systems which take automatic action to isolate the reactor and to provide the cooling necessary to remove the thermal energy and thus enable the containment of fission products within the reactor vessel and primary containment in the event of a serious reactor accident. Certain ESAS systems are on continuous duty to prevent, as well as to mitigate, reactor accidents. Examples of ESAS systems are component cooling, essential raw cooling water, together with their supporting electrical power and control systems.

These ESF systems consist of sensor instrument channels, power supplies, actuation channels, and actuators, together with their interconnecting wiring, involved in the operation of engineered safety features equipment. Redundant engineered safety features are actuated by the separate actuation channels. Each coincidence network energizes an engineered safety features actuation device that operates the associated safety features equipment (e.g., motor starter, valve operator, etc.).

The Class 1E electric systems provide the electric power used to safely shut down the reactor and limit the release of radioactive material following a design basis event. The electric systems included are comprised of the following interrelated systems:

(1) Alternating-current power systems.

(2) Direct-current power systems.

(3) Vital instrumentation and control power systems.

8.3.1.4.1 Cable Derating and Raceway Fill

Cables have been selected to minimize excessive deterioration due to temperature, humidity, and radiation during the design life of the plant. Environmental type tests have been performed on cables that are required to function during and following a loss of coolant accident (LOCA). Qualification type test results on these cables are provided in Section 3.11.

Selection of conductor sizes is based on ICEA P-46-426 "Power Cable Ampacities," ICEA P-54-440 "Ampacities Cables in Open-Top Cable Trays," and the National Electrical Code (NFPA-70). The effects on cable ampacity of environmental conditions and cable installation configuration are considered in the conductor size selection process. Conductor sizing, in general, is accomplished by applying an appropriate multiplying factor to the load current for the specified load type. Circuit breakers are used for high-speed clearing of faults to prevent damage to the 3-phase power cables. For power cables rated above 600V between conductors, the minimum size is 2/0 AWG with any exceptions and their justifications documented in the design criteria. Power and control cables which are routed on cable trays carrying essential cables are capable of passing the ICEA standard vertical flame test.

Conduit containing only one cable is sized for a maximum of 53% cable fill. Conduit containing two cables is sized for a maximum of 31% cable fill, and conduit containing three or more is sized for a maximum of 40% cable fill of the inside area of the conduit. Medium-voltage (6900V) power cables are routed on trays with other cables of the same voltage. All 6900V cables larger than 2/0 AWG are grouped as a 3-phase circuit and are separated from other circuits by a nominal distance equal to the radius of the larger cable. TVA takes no credit for spacing of medium voltage cables for ampacity purposes. The 6900V cables which are 2/0 AWG may be laid at random on cable trays and are separated (as described above) from grouped 3-phase circuits. The nominal spacing may be less where cables enter or exit a tray and at tray fittings where necessary to prevent exceeding the minimum cable bend radius. However, nominal spacing is restored as soon as practical. Low-voltage power cables rated 600V and below are routed on cable trays with other power cables of the same voltage. Low-voltage power cable tray fill is limited to a maximum of 30% of the cross-sectional area of the tray, except when a single layer of cable is used. Cable tray fill for control and instrumentation cables is limited to a maximum fill of 60% of the cross-sectional area of the tray. Cable trays that exceed the maximum fill require exceptions and their justifications to be documented and referenced in the design criteria.

8.3.1.4.2 Cable Routing and Separation Criteria

Electrical wiring for the GSPS, which includes the RPS, ESF, ESAS, and Class 1E electric systems, are segregated into separate divisions of separation (channels or trains) such that no single event, such as a short circuit, fire, pipe rupture, missile, etc., is capable of disabling sufficient equipment to prevent safe shutdown of the reactor, removal of decay heat from the core, or to prevent isolation of the primary containment. The degree of separation required for GSPS electrical cables varies with the potential hazards in a particular zone or area of the power plant. Criteria separation distances are addressed by spatial means, or installation of approved barriers, or analysis, or a combination of these. Exceptions to the criteria require documented justification and are referenced in the design criteria document. These criteria do not attempt to classify every area of the nuclear plant, but specifies minimum requirements and guidelines that have been applied with good engineering judgment as an aid to prudent and conservative layout of electrical cable trays, wireways, conduits, etc., through the plant (both inside and outside the containment). When a variance to the following minimum requirements exists, an analysis and/or exception is issued.

Mechanical Damage (Missile) Zone

Zones of potential missile damage exist in the vicinity of heavy rotating machinery or near other sources of mechanical energy, such as pipe whip, steam release, or pipes carrying liquids under high pressure. Layout and arrangement of cable trays, conduit, wireways, etc., are such that no locally generated force or missile can disable sufficient equipment to prevent safe shutdown of the reactor, removal of decay heat from the core, or to prevent isolation of the primary containment. In rooms or compartments having heavy rotating machinery, such as the reactor coolant pumps, the reactor feedwater turbines, or in rooms containing high pressure feedwater piping or high-pressure steam lines such as exist between the steam generators and the turbine, a minimum separation of 20 feet, or a minimum 6-inch-thick reinforced concrete wall is provided between trays containing cables of different divisions of separation. In an area containing an operating crane, such as the upper compartment of the reactor building, there is a minimum horizontal separation of 20 feet or a minimum 6-inch-thick reinforced concrete wall or barrier between trays containing cables of the different divisions of separation.

Fire Hazard Zone

Electrical cabling required to safely shutdown the plant in the event of a fire is protected in accordance with the separation criteria of 10 CFR 50, Appendix R, Section III.G.2 (see Fire Protection Report and FSAR Section 9.5.1). Other ESF cabling are arranged so as to minimize the possibility of a fire in one division from damaging cables in another division. Routing of cables for engineered safety features, power or control, through rooms or spaces where there is potential for accumulating large quantities (gallons) of oil or other combustible fluids through leakage or rupture of lube oil or cooling system has been avoided. In cases where it is impossible to provide other routing, only one division of engineered safety features cables is allowed in any such space, and the cables are protected from dripping oil by the use of conduits or flange covered cable trays designed to prevent oil from reaching the cables. No engineered safety features cables are routed through rooms containing oil storage tanks. In any room (except the cable spreading room, the auxiliary instrument room and the annulus) or space in which the only source of fire is of an electrical nature, cable trays carrying cables of different divisions of separation have a minimum horizontal separation of 3 feet if no physical barrier exists between the trays. If a horizontal separation of at least 3 feet is not attainable, a fire-resistant barrier is provided. This barrier extends at least 1 foot above (or to the ceiling) and 1 foot below (or to the floor) the line-of-sight communication between trays carrying redundant division cables. Vertical stacking of trays carrying cables of opposite separation divisions is avoided whenever possible. However, where it becomes necessary the following separation requirements are applied to open top ladder back trays stacked vertically, one above the other:

(1) For vertical separation greater than 5 feet, tray covers are not required.

(2) For vertical separation equal to 5 feet, the lower tray has a solid steel cover and the upper tray has a solid steel bottom or bottom cover.

(3) For vertical separation less than 5 feet, an approved barrier installed between redundant trays extends a minimum of 3 feet (or to the nearest wall, floor, or ceiling) on each side of the tray edge (covers are not required).

The following vertical separation requirements are applied to crossings of open top ladder back trays carrying cables of different separation divisions:

(1) For vertical separation greater than one foot, tray covers are not required. Circuit breaker testing for enhanced reliability of cable fault protection (as described in the "Open Cable Tray and Conduit" subsection) is the basis for reduced separation requirements at tray crossings.

(2) For vertical separation equal to one foot, the lower tray has a solid steel cover and the upper tray has a solid steel bottom or bottom cover.

(3) For vertical separation less than one foot, an approved barrier is installed between redundant trays (covers not required).

(4) Separation barriers, tray covers, or enclosures extend a minimum of 3 feet (or to the nearest wall, floor, or ceiling) on each side of the tray edge.

Totally enclosed trays (solid cover and solid bottom on both trays) can cross or be stacked vertically or run side by side provided one inch or greater separation is maintained between the trays. An approved barrier is installed between enclosed trays separated less than one inch. The total enclosure extends until there is a least 3 feet between the redundant trays.

Cable Spreading Room

The cable spreading room is the area provided under the Main Control Room where cables leaving the various control board panels are dispersed into cable trays or conduits for routing to all parts of the plant. Since the cable spreading room is protected from missiles by its Seismic Category I walls and there are no internal sources of missiles, such as high-pressure piping and heavy rotating machinery, the only potential source of damage to redundant cables is from fire. Smoke detectors and a sprinkler fire protection system have been installed ensuring that potential for fire damage to cables will be minimized in the cable spreading room. Where Engineered Safety Features cables of different divisions (train A or train B) of separation approach the same or adjacent unit control panel (see the Main Control Room discussion) with spacing less than 1 foot, these cables are run in metal (rigid or flexible) conduit or enclosed wireway to a point where 1 foot of separation exists. A minimum horizontal separation of 1 foot separates trays carrying cables of different divisions (channels or trains) if no physical barrier exists between the trays. Where a horizontal separation of 1 foot does not exist, a fire-resistant barrier extends at least 1 foot above (or to the ceiling) and 1 foot below (or to the floor) the line-of-sight communication between trays carrying redundant division cables. Vertical stacking of trays carrying cables of opposite separation divisions is avoided whenever possible. However, where it becomes necessary the following separation requirements are applied to open top ladder back trays stacked vertically, one above the other:

(1) For vertical separation greater than 3 feet, tray covers are not required.

(2) For vertical separation equal to 3 feet, the lower tray has a solid steel cover and the upper tray has a solid steel bottom or bottom cover.

(3) For vertical separation less than 3 feet, an approved barrier installed between redundant trays extends a minimum of 3 feet (or to the nearest floor, or ceiling) on each side of the tray edge (covers are not required).

The following vertical separation requirements are applied to crossings of open top ladder back trays carrying cables of different separation divisions:

(1) For vertical separation greater than one foot, tray covers are not required. Circuit breaker testing for enhanced reliability of cable fault protection (as described in the "Open Cable Tray and Conduit" subsection) is the basis for reduced separation requirements at tray crossings.

(2) For vertical separation equal to one foot, the lower tray has a solid steel cover and the upper tray has a solid steel bottom or bottom cover.

(3) For vertical separation less than one foot, an approved barrier is installed between redundant trays (covers not required).

(4) Separation barriers, tray covers, or enclosures extend a minimum of 3 feet (or to the nearest wall, floor, or ceiling) on each side of the tray edge.

Totally enclosed trays (solid cover and solid bottom on both trays) can cross or be stacked vertically or run side by side provided one inch or greater separation is maintained between the trays. An approved barrier is installed between enclosed trays separated less than one inch. The total enclosure extends until there is at least 3 feet between the redundant trays.

Auxiliary Instrument Room

The auxiliary instrument room is the area under the cable spreading room. Since the auxiliary instrument room is protected from missiles by its seismic Category I walls and there are no internal sources of missiles such as high-pressure piping or heavy rotating equipment, the only potential source of damage to redundant cables is from fire. No combustible materials are stored in this room, and no power cables with a protective device rated greater than 30 amperes are routed in this room unless they are in conduit. Fire and smoke detectors with control room alarm, and a carbon dioxide fire protection system, have been installed.

The auxiliary instrument room contains the process instrument racks, the solid-state protection racks, and associated instrument and relay racks.

A minimum horizontal separation of 1 foot is provided between trays carrying cables of different divisions channels or trains). When the minimum separation distance is not attainable, a fire-resistant barrier is utilized. The barrier extends at least 1 foot above

(or to the ceiling) and 1 foot below (or to the floor) the line of communication between the trays carrying redundant division cables.

Whenever it becomes necessary to stack open top train A or B trays vertically, one above the other, the following separation requirements are applied:

(1) For vertical separation of 3 feet or greater, tray covers are not required.

(2) For vertical separation equal to 3 feet, the lower tray has a solid steel cover and the upper tray has a solid steel bottom or bottom cover.

(3) For vertical separation less than 3 feet, an approved barrier installed between redundant trays extends a minimum of 3 feet (or to the nearest wall, floor, or ceiling) on each side of the tray edge (covers are not required).

The following vertical separation requirements are applied to vertical stacking of Channel I, II, III, or IV one above the other and to crossings of open top ladder back trays carrying cables of different separation divisions, trains or channels:

(1) For vertical separation greater than one foot, tray covers are not required. Circuit breaker testing for enhanced reliability of cable fault protection (as described in the "Open Cable Tray and Conduit" subsection) is the basis for reduced separation requirements at tray crossings.

(2) For vertical separation equal to one foot, the lower tray has a solid steel cover and the upper tray has a solid steel bottom or bottom cover.

(3) For vertical separation less than one foot, an approved barrier is installed between the redundant trays (covers are not required).

(4) Separation barriers, tray covers, or enclosures extend a minimum distance equal to the normal required separation (or to the nearest wall, floor, or ceiling) on each side of the tray edge.

Totally enclosed trays (solid cover and solid bottom on both trays) can cross or be stacked vertically or run side by side provided one inch or greater separation is maintained between the trays. An approved barrier is installed between enclosed trays separated less than one inch. The total enclosure extends until the normal separation distance is achieved.

Open Cable Tray and Conduit

Conduits carrying cables of redundant divisions may cross or run parallel to each other provided a minimum separation of one inch exists between any portion of the raceway, (i.e., boxes, fittings, etc.). A conduit carrying cables of one division may cross or run parallel to a cable tray containing cables of a redundant division, provided a minimum separation greater than one inch exists between tray and conduit. Electrical protection provides additional assurance that cables in conduits carrying cables of one division will not be damaged by an electrical fault on cables in open top trays or cables in free

air of a redundant division. The reliability of circuit breakers that provide the electrical protection for some of these cables is enhanced by periodic testing.

The results of a protection device reliability analysis is discussed in Appendix 8E. This analysis, based on data taken from IEEE 500-1977, demonstrates that each of the following protective schemes has a reliability which is essentially equivalent to that of a single circuit breaker periodically tested:

(1) A circuit breaker and fuse in series, or

(2) Two circuit breakers in series.

In addition to these protective schemes, IEEE 500-1977 data verifies that for this application, a single fuse with no periodic testing, has a failure rate which is approximately equal to the failure rate of two circuit breakers in series (see Part B analysis of Appendix 8E). Therefore, a single fuse when used as an interrupting device for cables, does not require periodic testing due to its stability, high reliability, and lack of drift. WBNP concludes that any one of the following protective schemes provides a reliable means of protecting cables in conduits from electrical faults on cables in open top trays and cables in free air of the opposite train, thus, meeting the intent of Regulatory Guide 1.75 to not degrade redundant Class 1E cables.

(1) A circuit breaker and fuse in series

(2) Two circuit breakers in series

(3) A single fuse

(4) A single circuit breaker periodically tested.

The only exceptions to testing single Class 1E circuit breakers that protect cables in conduits from electrical faults on cables in open top trays and cables in free air of the opposite train, will be where physical separation of specific circuits is shown to meet the requirements identified in IEEE 384-1992. WBNP is not committed to IEEE 384-1992 but will use it as criteria for exempting individual circuits from circuit breaker testing.

Some Class 1E motor-operated-valve circuits were designed with two circuit breakers in series to maintain their safe operating position by administratively controlling one of the circuit breakers in the open position.

Since the motor operators are electrically isolated from their power supply during normal operation, periodic testing will not be performed on the circuit breakers.

The molded case circuit breakers actuated by fault currents that protect cables in conduits from electrical faults on cables in open top trays and cables in free air of the opposite train, will have at least 10% of each type breaker tested every 18 months and will have the recommended maintenance performed on 100% of the breakers within the past 60 months. For any breaker failure or breaker found inoperable, an additional

10% of that type will be tested until no more failures are found or all circuit breakers of that type have been tested. The test will ensure operability by simulating a fault current with an approved test set.

A conduit carrying cables of one division may cross or run parallel to a cable tray containing cables of a redundant division with one inch separation, provided the tray has a cover, solid bottom or side adjacent to the conduit. The tray cover or solid bottom shall extend a minimum of three feet or to the nearest wall, floor, or ceiling on each side of the centerline of the conduit, for conduits that cross cable trays. Likewise, when conduits run parallel with cable trays, the tray cover or solid bottom shall extend a minimum three feet beyond each end of the influenced portion of conduit, or until the tray terminates or penetrates a wall, ceiling, or floor.

If the above separation requirements are not attainable, a barrier consisting of 1/2 inch minimum thickness of Marinite (or its equivalent) may be used between the raceways, provided the trays are enclosed as specified above. The barrier shall be continuous until spacial separation is attained and extend one inch on both sides of the raceway (tray or conduit) as applicable (or to the wall, floor, or ceiling, as applicable).

Main Control Room

Redundant safety-related cables enter the Main Control Room through separate floor openings. Each unit control panel, which has redundant components, has a minimum of three separate vertical and/or horizontal risers (enclosed wireways) from each of the respective terminal block groups to the control room floor (or bottom of walk space). Non-safety-related cables are routed through one or more riser(s), preferably near the center of the control panel. The redundant safety-related cables (train A or train B separation) are routed separately in each of the other two or more risers, preferably one near each end of the control panel. Where possible, risers of like trains of separation have been arranged such that the adjacent panel has a corresponding like train riser (i.e., train A in one panel has train A nearest it in the adjacent panel).

Separation of Class 1E Electric Equipment

All Class 1E electric equipment has physical separation, redundancy, and a controlled environment to prevent the occurrence of an external event that would threaten the safe shutdown of the reactor. No internally generated fault can propagate from Class equipment during any design basis event. All Class 1E electric equipment that has to operate during a flood has been located above maximum possible flood level unless it is designed to operate submerged in water.

The Class 1E electrical loads are separated into two or more redundant load divisions (channels or trains) of separations. The number of divisions has been determined by the number of independent sources of power required for a given function. The electric equipment that accommodates these redundant divisions is separated by sufficient physical distance or protective barriers. The separation distance has been determined by the severity and location of hazards. The environment in the vicinity of the equipment is controlled or protection provided such that no environmental change or accident will adversely affect the operation of the equipment.

The physical identification of safety-related electrical equipment is in accordance with Section 8.3.1.3.

6900V Equipment

The diesel generators and 6900V shutdown boards are designed for a two-division (train A and train B) separation. The 6900V equipment is located in Seismic Category I structures. The diesel generators are located in the Diesel Generator Building at approximately elevation 742 and have reinforced concrete barriers separating each unit from all other units and have no single credible hazard available that would jeopardize more than one unit. The diesel generator arrangements are shown in Figure 8.3-1. The ADGU is located in the ADGU building at elevation 742.0.

The 6900-volt shutdown boards are located in the Auxiliary Building at approximately elevation 757 (see Figure 8.3-3). An 8-inch reinforced concrete wall extending to the ceiling (see Section 9.5.1) is used to separate 6900-volt shutdown boards 1A-A and 2A-A from shutdown boards 1B-B and 2B-B. The 6900V diesel generator board C-S is located in the ADGU building at elevation 742.0. The ADGU is a Seismic Category I structure.

480-Volt Equipment

The 480V shutdown boards, 480V reactor MOV boards, 480V reactor vent boards, and control and auxiliary building vent boards are separated into train A and B groupings by 8-inch reinforced concrete walls extending to the ceiling (see Section 9.5.1) between redundant trains. The 480V shutdown board transformers associated with each power train are separated from the transformers associated with other power trains by a 8-inch-thick, 8-foot-tall reinforced concrete wall (see Section 9.5.1). The 480V equipment is located in the Auxiliary Building on elevations 757 and 772. The location of these boards is shown in Figure 8.3-2.

125-Volt DC Equipment

The 125V vital batteries I, II, III, and IV are located in the Auxiliary Building on elevation 772 and are divided into four divisions (channels I, II, III, and IV) of separation. Vital battery V which serves as a temporary replacement for any of the other four vital batteries during their testing, maintenance, and other outages is also located in the Auxiliary Building on elevation 772. Each 125V vital battery is separated from all other 125V vital batteries by providing individual rooms for each battery with 8-inch reinforced concrete walls extending to the ceiling (see Section 9.5.1). The ventilation system is designed to remove and dissipate the hydrogen given off by the batteries (see Section 9.4 for ventilation system description). Vital battery boards I, II, III, and IV are located in the Auxiliary Building on elevation 757 and are also divided into four divisions of separation. Each 125V vital battery board (I, II, III and IV) is separated from all other 125V vital battery boards by 8-inch-reinforced concrete wall extending to the ceiling (see Section 9.5.1). The location of these batteries and boards is shown in Figure 8.3-36. Vital battery board V is located on elevation 772 in the same room as vital battery V and is separated from the battery by a 7 ft high, 8 in. thick seismic wall (Figure 8.3-57).

120-Volt AC Equipment

The vital inverters are located in the Auxiliary Building on elevation 772 and are divided into four divisions (channels I, II, III, and IV) of separation. The channels I and II inverters are located in the Unit 1 area while the channels III and IV inverters are located in the Unit 2 area. The channels Iand II inverters are separated from the channels III and IV inverters by an 8-inch reinforced concrete wall extending to the ceiling (see Section 9.5.1).

The channel I and the channel III inverters are separated from the channel II and the channel IV inverters, respectively, by a distance of 60 feet. The location of the inverters is shown in Figure 8.3-36.

Electrical Penetrations of Primary Containment

Redundant essential cables enter the containment via separate electrical penetrations. Where possible, redundant essential cables utilize electrical penetrations spaced horizontally instead of vertically. Where redundant essential cables are installed in electrical penetrations spaced vertically, power cables carrying high energy are located above low level circuits, or barriers are provided between the high-energy and low-energy circuits where the vertical spacing is less than 3 feet. Areas have been provided for electrical penetrations so that redundant essential cables can be installed in separate penetration areas. Cables through penetrations of the primary containment are grouped in such an arrangement that failure of all cables in a single penetration cannot prevent a reactor scram or engineered safety features action. The penetration areas are shown on Figures 8.3-44 and 8.3-45.

8.3.1.4.3 Sharing of Cable Trays and Routing of Non-Safety Related Cables

There are five different cable tray systems, namely: 6900V, 480V, control, medium-level signal, and low-level signal trays. The 6900V trays carry only 6900V cables and are located in the highest level position of stacked trays. The 480V power cables, and ac and dc power cables of 277 volts or less, that carry more than 10 amperes are run in 480V cable trays. These trays may also carry cables from 0 to 277 volts carrying 10 amps or less. Medium-level signal trays carry the following cables: signal cables for inputs to and outputs from the computer other than thermocouples; instrument transmitters, recorders, RTD's greater than 100 millivolts, tachometers, and indicators; rotor eccentricity and vibration detectors; fiber-optic cables; and shielded annunciator cables used with solid-state equipment. Signal cables for thermocouples, strain gauges, thermal converters, and RTD's that are 100 millivolts or less are run in low level signal trays which occupy the lowest level in a stack of trays. Other cables are run in control trays. Prior to July 13, 1988, these trays could carry cables operating at 277V or less and carrying up to 30 amperes. After this date, these trays are limited to cables carrying 10 amperes or less.

Within a division the standard spacing between trays stacked vertically is 12 inches (2-inch tolerance), tray bottom to tray bottom. This spacing may be decreased to facilitate changes in elevation of the tray or to avoid interferences, e.g., pipes, pipe supports, heat and vent ducts, etc. The decrease from the 12 inch spacing must ensure

adequate access for cable installation (typically 6 to 9 inches) is maintained and the bottom of the top tray is to have a solid bottom. Within a division, the standard spacing between trays installed side by side is 6 inches (1-inch tolerance). The trays are constructed of galvanized steel, 6 to 24 inches wide and approximately 4 inches deep. All cable tray systems located in Category I structures have seismic supports. These supports are described in Section 3.10.3.

RPS cables (channels I, II, III, and IV), inside and outside containment, are routed in cable trays and/or conduits that are designated for their respective division of separation. ESF cables (trains A and B) are routed in 6900V, 480V, or control trays and/or conduits that are designated for their respective division of separation.

Vital instrument cables for the generating station protection system (GSPS) which includes the RPS and ESF may be routed in the same conduits, wireways, or cable trays provided the circuits have the same characteristics such as power supply and channel identity (I, II, III, or IV).

Automatic actuation and power circuits for the generating station protection system which includes the RPS and ESF may be routed in the same conduits, wireways, or cable trays provided the circuits have the same characteristics such as power supply and train identity (train A or train B).

Unit 1 analog circuits and Unit 2 analog circuits may be routed in the same conduits, cable trays, or wireways provided the circuits have the same characteristics such as power supply and channel identity (I, II, III, or IV). In like manner, Unit 1 train A cables may be routed in the same conduits, cable trays, and wireways as Unit 2 train A cables. Unit 1 train B cables may be routed in the same conduits, cable trays, or wireways as Unit 2 train B cables.

Cables for nonsafety related functions are not run in conduit used for essential circuits except at terminal equipment where only one conduit entrance is available. The nonsafety related cable is separated from the safety related cable as near the device as possible. Generally, the nonsafety related cables are for annunciator functions. Exposed conduits containing redundant cables are separated by a minimum 1-inch air gap or by a minimum 1/2-inch thickness of Marinite (or its equivalent) fire-resistant barrier between conduits. Non-safety related circuits routed in Category I structures are evaluated in order to determine if they are to be classified as an associated circuit, which requires one of the three protective schemes discussed below. As a result, no specific minimum separation distance is required between conduits carrying cables for non-safety related functions and conduits or cable trays carrying GSPS cables in Category 1 structures. Requirements for separation of GSPS and nonsafety related circuits in nonseismic structures are described below. Although there is no established minimum separation requirement between open top nondivisional cable trays and conduit containing redundant cables, it is concluded based on the following, that safety related cables are not degraded. Cables installed in trays prior to October 18, 1984 are coated with a fire resistant material. This coating significantly reduces the ignitability and combustibility of cable insulation.

TVA conducted fire tests, externally initiated by a propane burner, on a full scale mockup of trays loaded with cables coated with a fire-resistant material. No self-sustaining fire could be established until the coating was fractured and cables separated. The cable coating also protects against development of a fire from electrical faults since it restricts availability of oxygen needed for combustion. Therefore, TVA takes credit for the coating on cables not qualified to IEEE 383 flame test or equivalent, together with adequate circuit protective device(s) (as described below) as meeting the intent of Regulatory Guide 1.75 requirements to achieve independence between Class 1E and non-Class 1E cables routed in cable trays or conduits. Effective October 18, 1984, the use of coating on cables which meet IEEE Std. 383-1974 is not required except when the coating is used as part of the electrical penetration fire stops required by the WBN Fire Protection Report. In all cable coating applications, up to 10 cables not qualified to the IEEE 383 flame test or equivalent may remain uncoated on cable trays, unless small gaps or cracks in the coating exist in the tray segment. In such cases, up to 9 cables not qualified to the IEEE 383 flame test or equivalent may remain uncoated.

There are certain safety related components which are located in a nonseismic structure and whose circuits extend into a Category I structure. The circuits for these components have the following separation. While in a Category I structure, these circuits are routed with circuits of the same redundant division of separation. When they leave the Category I structure, these circuits are routed in conduits identified as GSPS conduits as described in Section 8.3.1.4.5. Conduits carrying these circuits are separated by a minimum 1-inch air gap from conduits or trays containing circuits of either redundant divisions or nonsafety related functions.

Tray and conduit systems located in Category I structures have seismic supports. In addition, a non-safety related cable may be routed with those for essential circuits, provided that the cable, or any cable in the same circuit, has not been subsequently routed onto another tray containing a different division of separation of essential cables.

Nondivisional associated cables that are routed in cable trays designated for Class 1E cables are treated the same as the Class 1E cables. The nondivisional cables are subject to the same flame retardant, cable derating, splicing restrictions, and cable tray fill as the Class 1E cables. Furthermore, these non-Class 1E cables are qualified in the same manner as Class 1E cables and/or protected by one of the protective schemes discussed below. Based on the results of the analyses of associated circuits, it is demonstrated that Class 1E circuits are not degraded.

These analyses include a review of protective devices for nondivisional associated medium voltage power, low voltage power, and control level cables routed in nondivisional raceways in Category I structures. Each of these cables is provided short circuit protection by either a single circuit breaker periodically tested, a single fuse, a circuit breaker and fuse in series, two circuit breakers in series, or two fuses. Energy produced by electrical faults in non-Class 1E cables routed in medium-level signal and low-level signal raceways is considered insignificant and is considered no challenge to Class 1E cables.

The results of the protective device application analysis for associated and non-Class 1E cables are discussed in Appendix 8E. This analysis, based on data taken from IEEE 500-1977, demonstrates that each of the following protective schemes has a reliability which is essentially equivalent to that of a single circuit breaker periodically tested:

(1) A circuit breaker and fuse in series, or

(2) Two circuit breakers in series.

In addition to these protective schemes, IEEE 500-1977 data verifies that for this application a single fuse with no periodic testing has a failure rate which is approximately equal to the failure rate of two circuit breakers in series (see Part B analysis of Appendix 8E). Therefore, a single fuse when used as an interrupting device for the above cables, does not require periodic testing due to its stability, high reliability, and lack of drift. To further support this position, TVA takes credit for installed cable coating as previously discussed. Thus, WBNP concludes that any one of the following protective schemes for associated and non-Class 1E cables provides a reliable means of meeting the intent of Regulatory Guide 1.75 to not degrade Class 1E cables:

(1) A circuit breaker and fuse in series

(2) Two circuit breakers in series

(3) A single fuse

(4) A single circuit breaker periodically tested

All of the installed protective devices and those added to further protect the associated and non-Class 1E cables are of a high quality commensurate with their importance to safety. For non-Class 1E circuit breakers, this requires functional testing, and for new purchases, being controlled as TVA Quality Level III which requires receipt inspections and traceability.

The electrically operated circuit breaker and molded case circuit breakers actuated by a fault current and installed as an isolation device will have at least 10% of each type of breaker tested every 18 months and will have the recommended maintenance performed on 100% of the breakers within the past 60 months. For any breaker failure or breaker found inoperable, an additional 10% of that type of breaker will be tested until no more failures are found or all electrically operated circuit breakers of that type have been tested. The tests will ensure operability by simulating a fault current with an approved test set.

There are certain safety-related components, such as the component cooling water pump C-S and the steam turbine-driven auxiliary feedwater pumps 1A-S and 2A-S, which receive power from redundant divisions (channels or trains) through manual transfer devices. In addition, there are certain safety- related components, such as the additional diesel generator unit (ADGU), and the fifth vital battery which are capable of supplying power to redundant divisions (channels or trains) through manual transfer

devices. These components will have suffix S added to their labels. A suffix S will be added to their respective raceway and cable designations. The S cables from the transfer device to the component require special separation and are routed in separate raceways with no other circuits with the following exception. Cables with a suffix S may be routed together provided the following two conditions are satisfied: (1) voltage levels are compatible, and (2) circuits are designed such that under any design basis event all cables in the raceway will always be of the same divisions (channel or train) where energized. These circuits are identified by a suffix S added to their respective conduit and cable numbers. The redundant feeder supply cables to the transfer devices have channel or train identification and separation depending on their application.

All power and control cables from the ADGU down to the first transfer point in the ADGU building are designed as S cables and are routed as such. Four cable sets (one set per each EDGU, two for train A and two for train B) are routed in cable trays in the EDGU conduit interface rooms (see Figures 8.3-58 and 8.3-59) and ADGU building and via a conduit bank between the buildings. It is not necessary for these train A and B trays to be separated by the minimum distance since no more than one train will be operational at any given time. During normal operations the four cable sets routed through trays A and B, respectively will not be energized nor electrically connected at either end. The only time any of the four cable sets can be energized is after the additional diesel generator unit (ADGU) has been manually aligned to replace an EDGU. During this time only one of the four cable sets (train A or B) can be energized, due to the fact that it is physically impossible to connect more than one of the four cable sets simultaneously.

The RPS, ESF, and ESAS receive their power from the preferred (offsite) and standby (onsite) sources. The normal power and control circuits from the preferred source are routed in conduits or cable trays separate from the alternate power and control circuits. These circuits are identified by a suffix P or R added to their respective cable numbers. See Section 8.2.1.6 for minimum spatial separation requirements.

The circuits associated with the standby power sources (Class 1E electric systems) are separated into two or more redundant divisions. The circuits between the diesel generators and the 6900V shutdown boards are designed for a two division separation (train A and train B).

The feeder circuits from the 125V dc vital battery boards to the control buses in the shutdown boards are separated into four divisions (channels I, II, III, IV). Feeder cables to the control buses in the train A shutdown boards are supplied from battery boards I and III and feeder cables to the control buses in the train B shutdown boards are supplied from battery boards II and IV. The channels I, II, III, and IV vital instrument power systems are supplied from vital battery boards I, II, III, and IV, respectively, and have been physically separated and routed independently from each other. The vital battery board arrangement is shown in Figure 8.1-3.

8.3.1.4.4 Fire Detection and Protection in Areas Where Cables are Installed

Fire detection and protection in areas where cables are installed are described in the WBN Fire Protection Report.

8.3.1.4.5 Cable and Cable Tray Markings

Field wiring and its raceway (conduit and cable tray) of the Generating Station Protection System (GSPS), which includes RPS, ESF, and Class 1E electric systems, is identified so that two facts are physically apparent to plant operation and maintenance personnel:

(1) That wiring is properly identified as being associated with the GSPS, and

(2) That wiring is properly identified as part of a particular division (or grouping) of enforced segregation within the GSPS.

Each cable has been assigned a number consisting of a combination of letters and numbers. In addition, cables for equipment of the GSPS have been assigned special separation suffixes (A or B for train A or B; S for special; D, E, F, or G for channels I, II, III, or IV, respectively; or J or K for postaccident monitoring channel 1 or 2 respectively; and P or R for normal or alternate offsite power). A computerized cable routing program is used to route cables and check raceway loading.

The main functions of this program are as follows:

(1) To route and accumulate cable length through the tray system,

(2) To maintain a predetermined maximum raceway loading,

(3) To ensure proper separation of divisional cables is maintained on its respective tray assignment,

(4) To separate circuit types (medium-voltage power, low-voltage power, control, signal, and thermocouple),

(5) To provide cable installation data for electricians.

(6) To provide various reports (e.g., raceway loading, cable routing, cables in a system, cables to specific components).

Inputs into the computer include the cable identifier, voltage level, and cable type that will be used. The cable types are identified by code-mark letters. The corresponding cross-sectional area (based on the maximum outside diameter of the cables) for each mark letter is also entered since the maximum tray loading is based on cross-sectional area except when a single layer of cable (or grouping of 3-phase circuits) is used. Prior to January 29, 1993, the nominal outside cable diameter was the basis for cross-sectional area values entered. The tray system lists each segment of tray, the from and to nodes, length between nodes, maximum allowable tray fill, and a node voltage

level code letter which identifies it for a particular circuit type. The node voltage levels for the respective cable tray system are as follows:

NV-l	Non-safety-related low level signal cables
NV-2	Non-safety-related medium level signal cables
NV-3	Non-safety-related control cables
NV-4	Non-safety-related low-voltage power cables (480V power cables and all ac and dc power cables of 250V or less that carry continuous load current of more than 10 amperes)
NV-5	Non-safety-related 6.9 kV power cables
NV-2D	Reactor Protection System channel I cables
NV-2E	Reactor Protection System channel II cables
NV-2F	Reactor Protection System channel III cables
NV-2G	Reactor Protection System channel IV cables
NV-3A	Engineered Safety Features train A control cables
NV-3B	Engineered Safety Features train B control cables
NV-4A	Engineered Safety Features train A low-voltage power cables
NV-4B	Engineered Safety Features train B low-voltage power cables
NV-5A	Engineered Safety Features train A 6.9 kV power cables
NV-5B	Engineered Safety Features train B 6.9 kV power cables

Cables that are assigned node voltage numbers that are not included in the above tray system list will require special routing treatment. This will usually mean that these cables will be routed through conduit exclusively. In some cases, hand routing of cables to assure separation on nondivisional cable trays will be used.

The field wiring for the GSPS equipment and components have distinct color-coded tags at terminations for each division of separation (channels or trains). The conduits, conduit boxes, and cable trays for field wiring of the GSPS equipment are color coded (by tags, nameplates, or markings on exterior surfaces) at conspicuous intervals ve division of separation. The color coding scheme used to identify divisions of separation is given in Section 7.1.2.3, except black lettering, may be used on conduit and cable tags at terminations for all but black background; white lettering is used on black background tags.

8.3.1.4.6 Spacing of Power and Control Wiring and Components Comprising the Class 1E Electrical Systems in Control Boards, Panels, and Relay Racks

Redundant power and control wiring and components associated with Class 1E electrical systems in control boards, panels, and relay racks are separated by either a minimum of six inches of air space or an approved barrier. See Section 7.1.2.2 for more detail of spacing of wiring and components in control boards, panels, and relay racks.

8.3.1.4.7 Fire Barriers and Separation Between Redundant Trays

The criteria for separation between redundant trays for various zones or areas of the plant is described in Section 8.3.1.4.2. For details of the fire protection system, see Section 9.5.1.

8.3.2 DC Power System

8.3.2.1 Description

8.3.2.1.1 Vital 125V dc Control Power System

The vital 125V dc control power system is a Class 1E system whose safety function is to provide control power for engineered safety features equipment, emergency lighting, vital inverters, and other safety-related dc powered equipment for the entire plant. The system capacity is sufficient to supply these loads during normal operation and to permit safe shutdown and isolation of the reactor for the "loss of all ac power" condition. The system is designed to perform its safety function subject to a single failure.

The 125V dc vital power system shall be composed of the four redundant channels (designated as channels I, II, III, and IV) and consists of four lead-acid-calcium batteries, six battery chargers (including two spare chargers), four distribution boards, battery racks, and the required cabling, instrumentation and protective features. Each channel is electrically and physically independent from the equipment of all other channels so that a single failure in one channel will not cause a failure in another channel. Each channel consists of a battery charger which supplies normal dc power, a battery for emergency dc power, and a battery board which facilitates load grouping and provides circuit protection. These four channels are used to provide emergency power to the 120V ac vital power system which furnishes control power to the reactor protection system. No automatic connections are used between the four redundant channels.

Battery boards I, II, III, and IV have a charger normally connected to them and also have manual access to a spare (backup) charger for use upon loss of the normal charger. Additionally, battery boards I, II, III, and IV have manual access to the fifth vital battery system. The fifth 125V dc Vital Battery System is intended to serve as a replacement for any one of the four 125V dc vital batteries during their testing, maintenance, and outages with no loss of system reliability under any mode of operation. See Figure 8.3-56.

The procedure for the substitution of the fifth vital battery for a primary vital battery is as follows: First, the fifth charger must be disconnected from the fifth vital battery board via the charger breaker; second, the selected primary vital battery board must be aligned to its spare battery charger via the spare charger transfer switch; third, the primary vital battery/primary vital battery board intertie breaker must be opened; fourth, the fifth vital battery board manual transfer switch must be aligned to the appropriate distribution panel feeder (A for batteries I and III, B for II and IV); fifth, the selected distribution panel manual transfer switch must be aligned to the appropriate primary vital battery board feeder; and sixth, the selected primary vital battery board/fifth vital battery intertie breaker must be closed.

In this mode of operation the fifth vital battery shall be maintained at the required nominal voltage level by the appropriate spare vital battery charger and shall be available, as needed, to supply all loads connected to the primary vital battery board. The substitution of vital battery V for a primary vital battery shall in no manner degrade either the reliability or the capacity of the 125-V dc vital power system: all system requirements shall be satisfied and all parameters unchanged. (Note: to fulfill these requirements, the fifth vital battery and all associated cabling shall be sized such that the minimum primary vital battery board voltage with fifth vital battery connected is, under all circumstances, greater than or equal to the primary battery board voltage with the primary vital battery connected.)

System Design Requirements

The requirements described below were implemented in the design of the Vital dc Power System.

Redundancy

The system is composed of four redundant channels. These four channels are used to provide emergency power to the four vital 120V ac inverters per unit which supply control power to the reactor protection system. Other loads are either two divisional or nondivisional loads. No automatic connections are used between the four redundant channels.

Separations

The four channels are electrically and physically separated so that a single failure in one channel will not cause a failure in another channel. Each channel has a charger, a battery, and a load distribution board.

Electrical separation for the fifth vital battery system is maintained through a series of interlocking breakers and through their administrative controls to prevent a single failure from accidentally connecting vital battery systems I, II, III, or IV to the fifth vital battery system. Physical separation of the fifth vital battery system is maintained to the same standards as vital battery systems I, II, III, and IV. Each group of actions needed to replace one of the four vital batteries with the fifth vital battery is annunciated in the main control room. Cables and conduits between the fifth vital battery board and its distribution panels A and B are designated as S (See FSAR section 8.3.1.4.3).

Capacity

The system has the capacity to continuously supply all steady state loads and maintain the battery in a fully charged condition. With the batteries in the fully charged condition, the system has the capacity to supply the required loads for a minimum of four hours with a loss of all ac power. The battery has a maximum capacity to supply the bounding load currents during an SBO period as shown on Table 8.3-12. The battery performance testing will be conducted in accordance with the Technical Specifications for both initial and periodic testing to assure the adequate battery capacity is maintained.

Charging

Chargers I, II, III and IV have the capacity to continuously supply the steady state loads and maintain the batteries in the design maximum charged state or to recharge the batteries from the design discharge state within an acceptable time interval irrespective of the status of the plant during which these demands occur. Chargers I, II, III and IV may be replaced by a spare charger. One spare charger is provided for each two normal chargers.

The sole function of Seismic Category I(L) Charger V is to recharge and maintain proper voltage level to Battery V while it is in a standby mode. The charger is isolated from the fifth vital system when the system is replacing one of the four vital batteries. Isolation is accomplished by manually opening the charger load and supply breakers located on fifth vital battery board and 480-volt Auxiliary Building common motor control center, respectively.

Ventilation

Each battery room has ventilation systems as described in Section 9.4.3 to prevent the accumulation of explosive gases. In addition to the ventilation systems provided to prevent accumulation of the hydrogen produced by the battery, there are voltmeters, high voltage alarms, and administrative procedures for control of equalizing charges that will provide additional protection. Also, as an added precaution, all cells are of the sealed type and have a special safety vent that prevents the ignition of gases within the cell from a spark or flame outside the cell.

Loading

Loads are assigned according to their divisional requirements. Loads requiring four divisions of separation are assigned to the four channels. Loads requiring two divisions of separation are assigned to Channels I or III and II or IV. Two-divisional loads primarily associated with Unit 1 are assigned to Channels I and II, while those primarily associated with Unit 2 are assigned to Channels III and IV. The nondivisional load assignments are distributed among the four channels.

Test and Inspections

The system will be periodically tested and inspected in accordance with the Technical Specifications to assure the continued adequacy of the system to perform its intended

function throughout the life of the plant. The system is equipped with ground detection and instrumentation to continuously monitor the system.

Identification

In all documents pertaining to Class 1E systems, the method of distinguishing between the safety and non-safety loads are clearly defined on the document. Equipment identification is discussed in Section 8.3.1.3.

Load Time of Application

The system has the capacity to continuously supply the normal and accident loads with ac power available, and all required loads for four hours with the loss of all AC power. A manual load shedding is required during an SBO within 30 minutes for the SBO period.

System Structure

The configuration of the dc control power system is shown on Figure 8.1-3. It is separated into four identical channels (designated as Channels I, II, III, and IV), with the equipment of each channel being electrically and physically independent from the equipment of all other channels. Each channel consists of a battery charger which supplies normal dc power, a battery for emergency dc power which is normally in the float mode of operation, and a distribution board which facilitated load grouping and provides circuit protection. Each channel is ungrounded and incorporates ground detection devices with alarm in the Main Control Room.

Physical Arrangement of Components

The battery boards, vital chargers, vital batteries, and diesel generator batteries comprising the dc power system are arranged to provide adequate physical isolation and electrical separations to prevent common mode failures. The analysis verifying the adequacy of independence appears in Section 8.3.2.2.

The specific arrangement of components is discussed below.

125-Volt Vital Batteries I, II, III, IV, and V

Reference: Figures 8.3-36 and 8.3-57

These batteries are located in individual rooms on elevation 772.0 of the Auxiliary Building. Vital battery V is located in the same room with vital battery board V. The battery room heating and ventilating systems are discussed in detail in Section 9.4.3.

125-Volt Vital Battery Boards I, II, III, IV, and V

Reference: Figures 8.3-36 and 8.3-57

Boards I, II, III, and IV are located in individual rooms on elevation 757.0 of the Auxiliary Building. Board V is located in the fifth vital battery room on elevation 772.0 of the Auxiliary Building. The board room heating and ventilating systems are discussed in detail in Section 9.4.3.

Loads

Each channel supplies the following types of loads: control circuits for the shutdown boards, relay panels, solenoid valve fuse panels, emergency lighting cabinets, inverters, annunciators, and panels associated with reactor instrumentation and control systems. Figures 8.3-47 through 8.3-50 list the loads on each battery board. Table 8.3-12 provides summary loading of the battery boards as supplied by the battery chargers for normal operation or the batteries for loss of all a.c. power or accident events.

Loads are assigned to the systems according to the loads' divisional requirements. Four divisional loads are assigned to the four channels, two divisional loads are assigned to Channels I or III and II or IV. The loads primarily associated with unit 1 are assigned to Channels I and II while loads primarily associated with unit 2 are assigned to Channels III and IV. Nondivisional loads primarily associated with unit 1 are assigned to Channels I or II. Similarly, nondivisional loads associated with unit 2 are assigned to Channels III or IV. Nondivisional loads that are primarily associated with plant common services are distributed among the four channels. Some loads have a normal and alternate feeder. The normal feeder is from one channel while the alternate feeder is from another channel. These loads are listed in Figures 8.3-47 through 50. The transfer of the loads between the two feeders is manual and is interlocked to prevent paralleling the redundant power sources.

Maximum steady state dc loads (during battery recharge following an ac outage, the inverters and lighting loads are supplied from ac power) for each channel are supplied from a battery charger when it has either normal or standby ac power available from the 480V shutdown boards. If the normal charger is unavailable, the loads are supplied from either the associated battery or a spare charger which can be manually connected to the battery board.

125V Diesel Generator Batteries 1A-A, 1B-B, 2A-A, 2B-B, and C-S

Reference: Figure 8.3-46

For a detail description of the 125V diesel generator battery system, refer to the paragraph on diesel generator control power in Section 8.3.1.1. Also, statements of compliance of the 125V diesel generator battery system with the applicable GDCs, regulatory guides, and IEEE standards are included in Section 8.3.1.1.

Normal DC Supply

Reference: Figure 8.1-3

The normal supply of dc current to the battery boards is from the battery charger in each channel. Each charger maintains a floating voltage of approximately 135 volts on the associated battery board bus (the battery is continuously connected to this bus also) and is capable of maintaining 140 volts during an equalizing charge period (all loads can tolerate the 140 volt equalizing voltage). The charger supplies normal steady state dc load demand on the battery board and maintains the battery in a charged state. Normal recharging of the battery from the design discharged condition

can be accomplished in 12 hours (with accident loads being supplied) and in approximately 36 hours (with normal loads being supplied) following a 4-hour ac power outage. The battery chargers, including the spare chargers if in service, are automatically loaded on the diesel generators for a loss of offsite power.

Two spare chargers are available for the four channels (one each for two channels). Each spare charger can be connected to either of its two assigned channels. It can substitute for or operate in parallel with the normal charger in that channel.

AC power for each charger is derived from the station auxiliary power system via two 480V ac 3-phase circuits which are physically and electrically independent. Each circuit has access to a preferred (offsite) and a standby (onsite) source. If the normal circuit supplying a charger is unavailable, the alternate circuit is selected by a manual transfer. The transfer switches are mechanically interlocked to prevent closing switches in a manner to parallel both feeds. The alternate 480V feeder breakers are verified open in accordance with the technical specifications. Each charger is equipped with a dc voltmeter, dc ammeter, and charger failure alarm. Malfunction of a charger is annunciated in the Main Control Room. Upon loss of normal power to a charger, each may be energized from the standby power system.

The charger is a solid-state type which converts a 3-phase 480V ac input to a nominal 125V dc output having a rated capacity of 200 amperes. Over this output current range the dc output voltage will vary no more than +1.0% for a supply voltage amplitude variation of +7.5% and frequency variation of + 2.0%.

Some operational features of the chargers are (1) float and equalize modes of operation, (2) output voltage adjustable over the range of 129 to 140 volts,(3) a current limit feature which limits continuous overload operation to 125% of rated output, (4) protective devices which prevent a failed charger from discharging its associated battery and protect the charger from external overloads, (5) metering and alarm circuits to monitor the charger output, (6) parallel operation capability. The charger normally operates in the float mode at 135 volts for batteries I-IV and 138.5 volts for battery V. The maximum equalizing voltage for batteries I-IV is 140 volts when connected to the distribution system. The system configuration, using substitution of battery V, permits off-line equalization at higher than normal values.

Emergency DC Supply

The emergency supply of dc current to each distribution board is from its associated vital battery. There are five vital batteries for the plant--one associated with each channel and vital battery V which may serve as a temporary replacement for vital battery I, II, III or IV. These batteries are physically and electrically independent. The vital batteries supply the entire plant dc load in the event the normal power source is unavailable. With normal power unavailable, three vital batteries are capable of supplying continuously for 30 minutes all loads required for safe shutdown of both units. The batteries also have the capability to supply the essential loads required to maintain the plant in a safe shut-down condition for four hours following a loss of all normal and standby ac power, but no accident. Each battery is normally required to

supply loads only during the time interval between loss of normal feed to its charger and the receipt of emergency power to the charger from the standby diesel generator.

Vital Battery Boards

Battery boards I, II, III and IV consist of four metal-enclosed panels. Mounted on these panels are the main distribution bus, battery and charger input buses, load group fuses, load group buses, subdistribution circuit breakers, and various instruments for monitoring board loading.

Each load-group fuse and subdistribution circuit breaker is selectively coordinated with the 1000-ampere main-battery-supply circuit breaker and the 1600-ampere battery-supply fuse. The load-group fuse is also coordinated with the subdistribution circuit breakers. The coordination between the load-group fuse and subdistribution circuit breakers is optimized to provide selective coordination for load-originated faults. The charger input breakers and fuses are considered a load group and are coordinated to the battery supply protective devices. The purpose of this coordination scheme is to prevent a fault on one subdistribution or charging feeder causing a loss of the emergency supply.

All of the subdistribution circuit breakers are 150-ampere frame molded-case types with the exception of the charger input, emergency lighting, and inverter breakers, which are 400-ampere frame molded-case types. The load groups are connected to the main distribution bus. The battery chargers, inverters, lighting-cabinet feeds and the non-safety-related load groups are connected to the main distribution bus with fuses.

All circuit breakers have trip alarm contacts to alert the control room operator of a tripped breaker. The ground indicator has an alarm contact to warn the operator of a distribution system ground. Metering on the distribution board for vital batteries I, II, III, and IV includes battery current, bus voltage, main and spare charger voltage, board charging current, and ground current. Metering for battery current and bus voltage for vital batteries I, II, III, and IV are also located on the main control board.

The class 1E vital battery board V consists of two metal-enclosed panels containing the main distribution bus, battery and charger input buses, battery main circuit breaker, charger main circuit breaker, sub-distribution-interlocking-load circuit breakers, and various instruments for monitoring board loading.

Battery Board V contains metering for battery current, bus voltage, and ground current which indicates the fifth vital battery system parameters in the standby or replacement mode. The main control room battery ammeter of the replaced battery system will be manually switched to indicate battery V current. The main control room bus voltmeter of the replaced battery system will continue to indicate the bus voltage of the replaced battery system.

Tests and Inspections

Prior to placing the vital dc system in operation, the system components will be tested in accordance with the requirements for the DC power system in Chapter 14. Subsequent to the vital dc system being declared operable, system testing will be conducted in accordance with the Technical Specifications.

The batteries are tested by discharging them with a load which simulates their loading during an ac power outage. The test is performed in accordance with IEEE Standard 450-1980, "IEEE Recommended Practice for Maintenance, Testing and Replacement of Large Lead Storage Batteries for Generating Stations and Substations," Sections 5.1 and 5.2. A variable load is connected to the batteries, and a constant current drain is maintained until conclusion of thetests. The battery capacity is then determined using the procedure outlined in IEEE Standard 450-1980, Section 6.5.

A battery service test, conducted in accordance with the procedures of Section 6.6 of IEEE Standard 450-1980, is also used to test the batteries under conditions as close to design as practical. The batteries are discharged through the simulated design loads for the required discharge period. The time required to return to normal conditions is established by recharging the batteries from discharged condition to a nominally fully charged state. The design loads will be confirmed by field measurements as part of the preoperational testing program.

The charger will be checked for normal and equalizing voltage adjustability, 100% output capability, specified regulation with and without the battery connected, and panel instruments calibration. For the distribution board, circuit breakers will be tested for proper trip operation, fuses will be checked to verify that the sizes and types specified on the single-line diagram (see Figures 8.3-47 through 8.3-50, and Figure 8.3-56) have been installed, and the board instruments will be calibrated.

Vital DC Power System Load Data

Figures 8.3-47 through 8.3-50 identify the safety-related and nonsafety-related connected loads. Table 8.3-12 provides summary loading of the batteries/battery chargers based on manufacturers' data. Capacity and capability of the vital power system are verified in Section 8.3.2.2.

8.3.2.1.2 Non-Safety-Related DC Power Systems

There are five non-safety-related dc systems: (1) the 24V dc Microwave Power Supply, (2) the 48V dc Telephone Power Supply, (3) the 48V Battery Systems, (4) the 250V Battery System, and (5) 24V dc coding, alarm, and paging (CAP) Power Supply. These systems supply power primarily for balance-of-plant loads.

24V DC Microwave Power Supply

This system consists of a battery, two 24V dc parallel-connected chargers, a power board, and a 24V dc distribution panel. It supplies power to the microwave equipment.

48V dc Telephone and Power Supply

This system consists of a 24-cell 48V telephone battery, a 48V telephone battery charger, a spare battery charger shared with the 48V plant battery system, and a 200A power distribution board. The telephone power supply provides power to such load as the PAX telephone,power line carrier equipment, and other communication equipment.

48V Plant Battery System

This system consists of a 24-cell 48V plant battery, a 48V plant battery charger, a spare charger shared with the 48V telephone power system, a battery board, and electrical control room distribution panel. This system provides power for various switchyard control functions and static carrier relaying equipment. Loads supplied by this system are not safety-related.

24V DC CAP Power Supply

This system consists of a 12-cell battery, two 24V dc 300A parallel connected chargers, and a 450A power distribution panel. It supplies power to portions of the coding, alarm, and paging (CAP) equipment.

250-Volt DC Power System

This system provides power for non-safety-related loads such as turbine auxiliaries, computer, and switchyard control and relaying equipment. The circuits supplying power for switchyard control are discussed in Section 8.2.1.4.

8.3.2.2 Analysis of Vital 125V DC Control Power Supply System

The 125V dc Class 1E electrical systems were designed, components fabricated, and are or will be installed meeting the requirements of the NRC 10 CFR 50 Appendix A General Design Criteria, IEEE Standard 308-1971, NRC Regulatory Guides 1.6 (revision 0) and 1.32, and other applicable criteria as enumerated herein.

The I, II, III, and IV vital battery system consists of four lead-acid-calcium batteries, six 200-ampere battery chargers, four distribution boards, cable, and hardware. Each distribution board is supplied from its own battery and charger. However, there are two spare chargers for supplemental and/or backup capacity. Each spare charger is connected so as to be available for use on either of two of the distribution boards for supplying load or charging the batteries. A manually operated switch transfers the spare charger from one board to another, and it is interlocked to prevent accidental parallel connection of the vital power systems.

The fifth vital battery system consists of 125V Vital Battery V, Battery Board V, Charger V, Distribution Panel A, Distribution Panel B, and four Panels 0 (one each for vital battery boards I, II, III and IV).

The distribution boards I, II, III and IV are each located in separate rooms at elevation 757 of the Auxiliary Building, which is designed as a seismic Category I structure, and they are protected from potential missile hazards. The batteries are located in separate rooms, and the chargers are located in groups of three in separate room at elevation

772 of this same building. Therefore, this equipment will not be exposed to hostile environments and, since it is outside the primary containment area, it will not be exposed to significant radiation due to a LOCA.

The Fifth Vital Battery System components are located as follows:

Component	Location
Battery V	Auxiliary Bldg, A4-U, El 772
Charger V	Auxiliary Bldg, A5-S, El 772

Component	Location
125-V Vital Distribution Board V	Auxiliary Bldg, A5-T, El 772
125-V Vital Distribution Panel A	Auxiliary Bldg, A5-R, El 757
125-V Vital Distribution Panel B	Auxiliary Bldg, All-R, El 757
Panel 0, Battery Board I	Auxiliary Bldg, A5-R, El 757
Panel 0, Battery Board II	Auxiliary Bldg, A5-R, El 757
Panel 0, Battery Board III	Auxiliary Bldg, All-R, El 757
Panel 0, Battery Board IV	Auxiliary Bldg, A12-R, El 757

Thus, the system design, equipment location, separation, and redundancy assure ability to meet the requirements for the applicable accident events described and evaluated in Chapter 15 and is in full compliance with NRC General Design Criteria 17 and Regulatory Guide 1.6, revision 0.

Analysis of Vital 125-Volt dc System for Compliance to Regulatory Guide 1.81 Position C2

The following results were obtained in an analysis of the vital 125-V dc system with respect to position C2 of Regulatory Guide 1.81 (each item is addressed in the order it appears in position C2 of the Regulatory Guide):

(a) Watts Bar is a two-unit plant

(b) The vital 125-V dc batteries are designed to supply all required loads. This includes the safety system loads energized by a spurious accident signal (single failure) in a non-accident unit concurrent with the safety loads energized in an accident unit. Therefore, assuming a loss of offsite power, a false or spurious accident signal in the non-accident unit concurrent with an accident in the other unit will not preclude the vital 125-V dc system from performing its intended safety function.

(c) Assuming the loss of offsite power, a design-basis accident and a single failure (loss of a vital battery), sufficient capacity is available in the

remaining vital 125-V dc batteries to support a safe and orderly shutdown of the plant.

(d) Only one of the four vital 125-V batteries will be removed from service for maintenance or testing at any one time. Therefore, this condition will not preclude the ability to safely shutdown both units, assuming the loss of offsite power.

(e) No interface between the unit operators is required to meet items b and c above since the batteries are designed to supply all required loads for the events identified in b and c.

(f) Status indications for the vital 125-V dc system are provided in each unit's main control room (MCR).

The normal or preferred power source to each distribution board is from the battery charger which is supplied from either one of two 480-volt ac shutdown distribution boards. The battery serves as an emergency source in the event the battery charger source is lost or is inadequate for the load required. Table 8.3-12 provides maximum loading for each board for normal, loss of all a.c. power, and accident conditions. With 480 VAC available, the primary charger supplying each board has the capacity to supply load currents and recharge the battery from a minimum design discharge state. Each battery has an adequate rating at the minimum design temperature (60° F) and when derated for aging, for a minimum of 105 volts (108.5 volts for battery V) at the battery terminals. Under emergency conditions, including 480 VAC unavailable, the battery capacity exceeds the maximum design load requirements for each board. The capability of the battery system is verified by the DC power system tests discussed in Chapter 14, and by system testing conducted in accordance with the Technical Specifications.

Each dc control bus on the 6.9kV and 480V shutdown boards has a normal and alternate supply. The alternate supply is redundant and electrically separate from the normal supply. The normal and alternate power supplies for Train A shutdown boards control buses are Batteries I and III and for Train B shutdown boards, Batteries II and IV. The supply cables are routed so as to provide complete physical separation from the two supplies to each load. The overall design of the system (including batteries, chargers, distribution boards, and cabling) incorporates sufficient capacity and capability to deliver the maximum design load currents required at each remote point and also to clear any possible short-circuit fault currents.

The load demand from Battery Boards I, II, III and IV can be grouped into essentially three categories for analysis purposes. These are (1) the vital inverters, (2) 6900V and 480V shutdown board control power, and (3) miscellaneous control and instrumentation loads. The output fuse and breaker trip ratings and trip times are coordinated to provide protection and isolation for the cables leaving the board.

Referring to Figure 8.1-3, it can be seen that each of the three groups of loads are supplied from the main distribution bus to a stub bus from which the power is delivered to each load circuit by a molded-case automatic circuit breaker. The non-safety-

related stub buses are connected to the main distribution bus through fuses. Each stub bus may supply one or more circuit breakers. Figures 8.3-37 through 8.3-40 show the exact circuit distribution. Each circuit breaker or fuse has a current-interrupting rating greater than the maximum short-circuit current capability of the battery and charger combined. Each circuit breaker and fuse is sized in accordance with the circuit requirements. The circuit breakers and fuses are also sized to coordinate with the battery protective devices.

The fuse is likewise coordinated with the main bus supply protective devices. The one panel of the distribution board that is devoted entirely to fused load circuits is powered from the main bus through a molded-case breaker which provides redundant protection and serves as an isolating disconnect switch.

Chargers I, II, III and IV are all identical and are rated for a load duty as dictated by the battery board distribution and battery charging requirements. The output load of the charger is delivered through a 2-pole molded-case breaker that is capable of interrupting the battery backfeed into the charger as necessary. The trip setting of the breaker is chosen to permit the charger to operate at its maximum output capability without experiencing a false trip.

The electrical characteristics of the charger provide the necessary output power regulated and filtered as required by the load for the worst maximum and minimum input power conditions. The charging capacity exceeds that required to restore the battery from the design minimum charge state to the fully-charged state under worse case load conditions in compliance with Regulatory Guide 1.32. The input circuit of the charger is protected from the source power by a molded-case breaker that also serves as an isolating or disconnect switch. The input power is derived from either one of two 480-volt shutdown distribution boards. The manually-operated transfer switch through which the power is delivered is interlocked in such a manner so as not to parallel the two shutdown boards in compliance with Regulatory Guide 1.6, Revision 0.

Seismic Category I(L) battery charger V is intended solely to maintain vital battery V in its fully charged state and to recharge it following its use or testing. At no time will battery charger V be used to supply vital battery system loads. Battery charger V has sufficient capacity to restore vital battery V from design minimum charge state to the fully charged state in approximately 40 hours. The output load of the charger is delivered through a 2-pole molded-case breaker capable of interrupting battery backfeed current into the charger as necessary. The breaker trip setting is chosen to permit maximum charger output without experiencing false trip. The electrical characteristics of the charger provide the necessary filtered and regulated output power for battery recharge. The input circuit of the charger is protected from the source power by a molded-case breaker which serves also as an isolating or disconnect switch. The input power is from the 480V Auxiliary Building Common MCC.

Surveillance and Monitoring

Each distribution board and charger is equipped with the proper instruments to provide visual indication of the necessary electrical quantities. An alarm contact is provided on all circuit breakers and on all fuses located on the fuse distribution board that closes

for a blown fuse or automatic opening of the breaker. Undervoltage alarm relays provide annunciation for loss of power on the buses or power input to the chargers. Relays which detect a no-charge condition are provided on the chargers to detect a charger failure. Overvoltage alarm relays in charger provide annunciation for protection of system loads. A ground indication alarm meter provides annunciation for ground faults. Closure of any contact provides annunciation in the Main Control Room (MCR). Also, a battery current ammeter (charge/discharge) and a battery bus voltmeter are provided in the MCR and locally to verify proper operation of each system. The fifth battery charger does not supply dc system loads; therefore, the overvoltage and failure alarm relays do not serve any safety or protective function and consequently are not required for alarms.

The overall system design (including function requirements, redundancy, capability, availability, surveillance, and energy storage capacity) is in full conformance with IEEE Standard 308-1971 criteria for Class 1E Systems.

Seismic Qualification

One complete board assembly and one complete battery charger assembly have been subjected to the safe shutdown earthquake (SSE) conditions stipulated in the design criteria for the particular elevation at which they are installed. (Refer to Section 3.10.) The tests for vital battery boards I, II, III, and IV and charger I, II, III, and IV were performed in conformance to IEEE Standard 344-1971, Guide for Seismic Qualification of Class 1E Equipment. [Charger V is Seismic Category I(L)]. For Vital Battery Boards I, II, III, and IV, one breaker of each type used on the equipment was operated under simulated fault conditions at the same time the assembly was experiencing the seismic forces. The seismic test results assure that the complete assembly will continue to function properly and continue to deliver the required power during and after any expected SSE condition.

A seismic test was performed on Vital Battery Board V and distribution panels A, B, and 0 in accordance with IEEE Standard 344-1975. The board and panels were verified to maintain electrical function and structural integrity before, during, and after the test. No malfunctions of equipment were exhibited.

Design Test

All battery chargers were electrically tested to assure that each unit is capable of performing all requirements as specified. All boards were subjected to and satisfactorily passed the following tests as specified under the indicated paragraphs of section 20-5 of ANSI C37.20-1969 (ANSI C37.20-1974 for fifth vital battery system):

20-5.2.8 - Flame Resistance for Barrier, Bus, and Wire Insulation
20-5.3.2 - Mechanical operation
20-5.3.4.1 - Control Wiring Continuity
20-5.3.4.2 - Control Wiring Insulation

All molded-case circuit breakers comply with NEMA Publication No. AB-1-1964 (AB-1-1975 for fifth vital battery system) requirements, and all drawout low-voltage

circuit breakers comply with NEMA Publication No. SG3-1965. All control circuit wiring has self-extinguishing insulation rated 600 volts in accordance with paragraph 6.1.3.1 of ANSI C37.20-1969 (ANSI C37.20-1974 for fifth vital battery system). All equipment is certified to operate within the environmental requirement called for in the Design Criteria (Refer to Section 3.11).

Quality Assurance

A Quality Assurance program implemented from the beginning of the specification for this equipment and continued throughout installation and final checkout assures that the equipment meets all applicable design and operable criteria. The specifications require that suppliers of this equipment maintain a Quality Assurance program throughout the duration of the contract and that the program conform to the essential elements as defined in NRC Appendix B of IO CFR, Part 50. An in-plant examination of each contractor's Quality Assurance program assures compliance with these requirements. The design, specification, and any design changes are reviewed by designated staff engineers to assure compliance with Quality Assurance procedures and design criteria. All records, drawings. test reports, etc., depicting quality assurance review are maintained in appropriate files in accordance with established procedures.

8.3.2.3 Physical Identification of Safety-Related Equipment in dc Power Systems

The physical identification of the onsite dc power systems is combined with the onsite ac power systems and is described in Section 8.3.1.3.

8.3.2.4 Independence of Redundant DC Power Systems

The treatment of the redundant onsite dc power systems is included in Section 8.3.1.4 with the onsite ac power systems.

8.3.2.5 Sharing of Batteries Between Units

The safety loads are assigned to the vital 125-V batteries so that such sharing will not significantly impair their ability to perform their safety functions, including in the event of an accident in one unit and orderly shutdown and cooldown of the remaining unit.

The 125-V dc power required for engineered safety features is arranged as follows:

Unit 1 'A' Train - Vital Battery I
Unit 1 'B' Train - Vital Battery II
Unit 2 'A' Train - Vital Battery III
Unit 2 'B' Train - Vital Battery IV

Four channel 120V ac vital instrument power in supplied from eight (four per unit) uninterruptable power supply units. The normal input to these units is supplied from the 480V shutdown system with backup supply coming from the vital batteries. The 480V ac input is rectified and biased against the dc by means of an auctioneered diode circuit to permit use of the battery source if the ac input voltage is lost.

The safety loads supplied from these units have been grouped as follows:

Unit 1, Channel I	-	Unit 1 RPS Channel I input relays, ESF 'A' Train output relays.
Unit 1, Channel II	-	Unit 1 RPS Channel II input relays, ESF 'B' Train output relays.
Unit 1. Channel III	-	Unit I RPS Channel III input relays.
Unit 1, Channel IV	-	Unit 1 RPS Channel IV input relays.
Unit 2, Channel I	-	Unit 2 RPS Channel I input relays.
Unit 2, Channel II	-	Unit 2 RPS Channel II input relays.
Unit 2, Channel III	-	Unit 2 RPS Channel III input relays, ESF 'A' Train output relays.
Unit 2, Channel IV	-	Unit 2 RPS Channel IV input relays, ESF 'B' Train output relays.

Plant common systems such as emergency gas treatment are supplied from Unit 1, Channels I and II. Devices that require power to actuate are assigned to Channels I and II for unit 1 and Channels III and IV for Unit 2. RPS inputs are assigned to all channels since they initiate on loss of power (except, the inputs for containment spray which requires power to actuate).

The limiting conditions studies was the loss of offsite power concurrent with the failure of one battery. Table 8.3-27 shows the results of this study.

Conformance with General Design Criteria, Regulatory Guides, and Branch Technical Position.

GDC 5 The failure of a vital battery does not significantly impair the ability of systems and components important to safety to perform their safety functions, including, in the event of an accident in one unit an orderly shutdown and cooldown of the remaining unit.

RG 1.6, There are no provisions for automatically connecting one load group to another load group. There are no provisions for automatically transferring loads between redundant load groups.

RG 1.81 and BTP EICSB 7 The design of the Watts Bar 125-volt vital dc system meets all the requirements for multi-unit generating stations for which construction permit application were made before June 1, 1973, as described in RG 1.81 and BTP EICSB 7.

RG 1.155 The design of the vital battery systems complies with the regulatory requirements and the NUMARC 87-00 guidelines for 10CFR 50.63, Station Blackout. Load shedding of the non-required loads may be performed to achieve the required four-hour coping duration.

8.3.3 Fire Protection for Cable Systems

Refer to the WBN Fire Protection Report for discussion of fire protection for cable systems.

Table 8.3-1 Safety-related Standby (Onsite) Power Sources And Distribution Boards

UNIT 2		UNIT 1	
Power Train B	**Power Train A**	**Power Train B**	**Power Train A**
Diesel Gen 2B-B	Diesel Gen 2A-A	Diesel Gen 1B-B	Diesel Gen 1A-A
6.9kV Shdn Bd 2B-B	6.9kV Shdn Bd 2A-A	6.9kV Shdn Bd 1B-B	6.9 kV Shdn Bd 1A-A
480V Shdn Bd 2B1-B 480V Shdn Bd 2B2-B	480V Shdn Bd 2A1-A 480V Shdn Bd 2A2-A	480V Shdn Bd 1B1-B 480V Shdn Bd 1B2-B	480V Shdn Bd 1A1-A 480V Shdn Bd 1A2-A
Reactor MOV Bd 2B1-B	Reactor MOV Bd 2A1-A	Reactor MOV Bd 1B1-B	Reactor MOV Bd 1A1-A
Reactor MOV Bd 2B2-B	Reactor MOV Bd 2A2-A	Reactor MOV Bd 1B2-B	Reactor MOV Bd 1A2-A
Cont & Aux Bldg Vent Bd 2B1-B	Cont & Aux Bldg Vent Bd 2A1-A	Cont & Aux Bldg Vent Bd 1B1-B	Cont & Aux Bldg Vent Bd 1A1-A
Cont & Aux Bldg Vent Bd 2B2-B	Cont & Aux Bldg Vent Bd 2A2-A	Cont & Aux Bldg Vent Bd 1B2-B	Cont & Aux Bldg Vent Bd 1A2-A
Reactor Vent Bd 2B-B	Reactor Vent Bd 2A-A	Reactor Vent Bd 1B-B	Reactor Vent Bd 1A-A
Diesel Aux Bd 2B1-B	Diesel Aux Bd 2A1-A	Diesel Aux Bd 1B1-B	Diesel Aux Bd 1A1-A
Diesel Aux Bd 2B2-B	Diesel Aux Bd 2A2-A	Diesel Aux Bd 1B2-B	Diesel Aux Bd 1A2-A
Abbreviations:	Aux - Auxiliary Bd - Board Bldg - Building	Cont - Control Gen - Generator MOV - Motor Operated Valve	Shdn - Shutdown Vent - Ventilation

Table 8.3-2 Shutdown Board Loads Automatically Tripped Following A Loss of Preferred (Offsite) Power

Equipment Name[3]	Quantity	HP or kW	Power Train 2B	2A	1B	1A
Pressurizer Heater	4	485	x	x	x	x
Pressurizer Heater	4	415	x	x	x	x
Containment Spray Pump	4	700	x	x	x	x
Centrifugal Charging Pump	4	600	x	x	x	x
Essential Raw Cooling Water Pump	8	800	xx	xx	xx	xx
Safety Injection Pump	4	400	x	x	x	x
Auxiliary Feedwater Pump	4	600	x	x	x	x
Residual Heat Removal Pump	4	400	x	x	x	x
Component Cooling System Pump	4	350	x	x	x	x
Component Cooling System Pump C-S	1	350		x------or------x		
Reciprocating Charging Pump	2	200	x		x	
Spent Fuel Pit Pump	2	100		x	x	
Spent Fuel Pit Pump (Spare)	1	100		x------or------x		
Service Air Compressor	2	125			x	x
Fire Pump	4	200	x	x	x	x
Auxiliary Building General Supply Fan	4	100	x	x	x	x
Auxiliary Building General Exhaust Fan	4	125	x	x	x	x
Fuel Handling Area Exhaust Fan	2	100	x	x		
Cont & Aux Building Vent Board 2	4	-	x	x	x	x
Reactor Vent Board	4	-	x	x	x	x
Shutdown Board Room Chiller Package	2	250		x	x	
Control Rod Drive Mech. Coolers	8[1]	150	xx	xx	xx	xx
Containment Lower Compt. Cooler Fan	8	60(40[2])	xx	xx	xx	xx

Notes:

1. Each CRDM Cooler has 2 - 75HP motors.
2. This is the horse power rating for the Unit 2 fans.
3. Some of the Non-Safety Related Loads connected to Safety Related Motor Control Centers are also stripped and are not automatically reconnected.

Table 8.3-3 Diesel Generator Load Sequentially Applied Following A Loss of Preferred (Offsite) Power[1]

Equipment Name	Time in Seconds[2]	Load Nameplate HP	Starting kVA	Load Applied Nonaccident Condition	Load Applied Accident Condition SIφA	Load Applied Accident Condition SIφB
Miscellaneous Loads	0	1130 KVA	4170	Yes	Yes	Yes
Centrifugal Charging Pump & AHU	5	605	3117	Yes	Yes	Yes
Safety Injection Pump & AHU	10	405	2537	No	Yes	Yes
Residual Heat Removal Pump & AHU	15	405	2177	No	Yes	Yes
Essential Raw Cooling Water Pump	20	800	3932	Yes	Yes	Yes
Component Cooling System Pump	35	350[3]	1660	Yes	Yes	Yes
Auxiliary Feedwater Pump	25	600	3429	Yes	Yes	Yes
Fire Pump[4]	40	200	939	Yes	No[5]	No
CRDM Cooling Fan	See Note 7	150	659	Yes	Yes	No
Cont'mt LCC Fan	See Note 7	60(40)[8]	465(245)[8]	Yes	Yes	No
Pressurizer Heaters	90	485 kW	485 kW	Yes	No	No
Containment Spray Pump & AHU	184	708	3409	No	No	Yes
Shutdown BD Rm Chiller Pkg	360	240[6]	963	Yes	Yes	Yes
Cont'mt Air Return Fan	540	100	692	No	No	Yes
Main Control Rm Chiller Pkg	360	250[9]	1454	Yes	Yes	Yes
Electrical Bd Rm Chiller Pkg	360	250[10]	1454	Yes	Yes	Yes

Diesel Generator Set Rating: 4400 kW continuous and 4840kW for 2 hours out of 24.

AHU - Air Handling Unit

LCC - Lower Compartment Cooler

NOTES:

(1) The sequence times given apply to WBN Unit 1.

(2) Time is measured from the time of closing of the generator breaker connecting the diesel generator to the shutdown board. Values given are nominal.

(3) Diesel generator 1A or 2B will have two component cooling system pumps loaded.

(4) Initial Train A pump, subsequent pumps delayed by 10 seconds each.

(5) Fire pumps receiving power from the Unit with an accident.

(6) On diesel generator 1B and 2A only

(7) Fans will be automatically reenergized in 40, 50, 60 and 70 seconds (+5%) respectively.

(8) Values in parenthesis apply for unit 2.

(9) On diesel generator 1A and 1B only.

(10) On diesel generator 2A and 2B only.

Table 8.3-4 Unit 1 Power Train A Board Loading

	Board Bus Rating kVA	Connected Load kVA[1]	Max. Load Demand kVA	Mode to Maximum Demand k[2]
6.9kV Shutdown Bd 1A-A	14,300	9,281	5,771	A
480V Shutdown Bd 1A1-A (3200/1600 a bus)	2660/1330	2122/1530	1800/1217	B/B
480V Shutdown Bd 1A2-A (3200/1600 a bus)	2660/1330	2283/1240	1900/1063	B
Reactor MOV Bd 1A1-A	498.8	131	102	B
Reactor MOV Bd 1A2-A	498.8	137	137	B
Con & Aux Bldg Vent Bd 1A1-A	498.8	459	445	A
Con & Aux Bldg Vent Bd 1A2-A	498.8	443	385	B
Reactor Vent Bd 1A-A	498.8	589	407	C
Diesel Aux Bd 1A1-A	498.8	127	123	A
Diesel Aux Bd 1A2-A	498.8	125	125	A

[1]"Connected Load" values do not include valves, motor-operated doors, elevators, etc.

[2]Codes for "Mode to Maximum Demand k":

A - Accident shutdown with normal power available

B - Normal operation/shutdown

C - Unit shutdown in maintenance condition

Table 8.3-5 Unit 1 Power Train B Board Loading

	Board Bus Rating kVA	Connected Load kVA[1]	Max. Load Demand kVA	Mode to Maximum Demand k[2]
6.9-kV Shutdown Bd 1B-B	14,300	9372	5668	A
480V Shutdown Bd 1B1-B (3200/1600 a bus)	2660/1330	2368/1445	1940/1013	B/B
480V Shutdown Bd 1B2-B (3200/1600 a bus)	2660/1330	2108/1390	1761/1239	B
Reactor MOV Bd 1B1-B	498.8	126	98	B
Reactor MOV Bd 1B2-B	498.8	165	165	B
Con & Aux Bldg Vent Bd 1B1-B	498.8	448	434	A
Con & Aux Bldg Vent Bd 1B2-B	498.8	476	424	A
Reactor Vent Bd 1B-B	498.8	605	387	C
Diesel Aux Bd 1B1-B	498.8	118	114	A
Diesel Aux Bd 1B2-B	498.8	83	82	A

[1]"Connected Load" values do not include valves, motor-operated doors, elevators, etc.

[2]Codes for "Mode to Maximum Demand k":

A - Accident shutdown with normal power available

B - Normal operation/shutdown

C - Unit shutdown in maintenance condition

Table 8.3-6 Unit 2 Power Train A Board Loading

	Board Bus Rating kVA	Connected Load kVA[1]	Max. Load Demand kVA	Mode to Maximum Demand k[2]
6.9kV Shutdown Bd 2A-A	14,300	8976	4767	A
480V Shutdown Bd 2A1-A (3200/1600 a bus)	2660/1330	2063/1493	1576/1018	B/B
480V Shutdown Bd 2A2-A (3200/1600 a bus)	2600/1330	2055/1345	1789/1267	B
Reactor MOV Bd 2A1-A	498.8	85	65	B
Reactor MOV Bd 2A2-A	498.8	186	186	B
Con & Aux Bldg Vent Bd 2A1-A	498.8	486	440	A
Con & Aux Bldg Vent Bd 2A2-A	498.8	421	369	B
Reactor Vent Bd 2A-A	498.8	591	393	C
Diesel Aux Bd 2A1-A	498.8	116	114	A
Diesel Aux Bd 2A2-A	498.8	83	83	A

[1]Connected Load values do not include valves, motor-operated doors, elevators, etc.

[2]Code for Mode to Maximum Demand k

A - Accident shutdown with normal power available

B - Normal operation/shutdown

C - Unit shutdown in maintenance condition

Table 8.3-7 Unit 2 Power Train B Board Loading

	Board Bus Rating kVA	Connected Load kVA[1]	Max. Load Demand kVA	Mode to Maximum Demand k [2]
6.9-kV Shutdown Bd 2B-B	14,300	8447	5035	A
480-V Shutdown Bd 2B1-B (3200/1600 a bus)	2660/1330	2171/1419	1761/1019	B/B
480-V shutdown Bd 2B2-B (3200/1600 a bus)	2600/1330	2120/1279	1781/1119	B
Reactor MOV Bd 2B1-B	498.8	84	59	B
Reactor MOV Bd 2B2-B	498.8	211	211	A
Con & Aux Bldg Vent Bd 2B1-B	498.8	396	356	A
Con & Aux Bldg Vent Bd 2B2-B	498.8	325	272	A
Reactor Vent Bd 2B-B	498.8	598	385	C
Diesel Aux Bd 2B1-B	498.8	117	114	A
Diesel Aux Bd 2B2-B	498.8	101	94	A

[1]Connected Load values do not include valves, motor-operated doors, elevators, etc.

[2]Code for Mode to Maximum Demand k

A - Accident shutdown with normal power available

B - Normal operation/shutdown

C - Unit shutdown in maintenance condition

Table 8.3-8 Shutdown Transformer Loading

All Transformer Ratings Are;
2000 kVA at 55 C Or 2240 kVA at 65 C

Power Train A			Power Train B		
Unit 1					
Transformer Designation	Connected kVA	Max. Demand kVA	Transformer Designation	Connected kVA	Max. Demand kVA
1A1-A	2122	1800	1B1-B	2368	1940
1A2-A	2283	1900	1B2-B	2108	1761
Unit 2					
Transformer Designation	Connected kVA	Max. Demand kVA	Transformer Designation	Connected kVA	Max. Demand kVA
2A1-A	2063	1576	2B1-B	2171	1761
2A2-A	2055	1789	2B2-B	2120	1781

Table 8.3-9 D. C. Control Power For Safety-Related Standby (Onsite) Power Distribution Boards

	125-Volt vital Battery Supply			
	Nor Bus		Emerg Bus	
Board Name	Nor Fdr	Alt Fdr	Nor Fdr	Alt Fdr
6.9-kV Shutdown Board 1A-A	I	III	III	I
6.9-kV Shutdown Board 1B-B	II	IV	IV	II
6.9-kV Shutdown Board 2A-A	III	I	I	III
6.9-kV Shutdown board 2B-B	IV	II	II	IV
480-Volt Shutdown Board 1A1-A	I	III	III	I
480-Volt Shutdown Board 1A2-A	I	III	III	I
480-Volt Shutdown Board 1B1-A	II	IV	IV	II
480-Volt Shutdown Board 1B2-B	II	IV	IV	II
480-Volt Shutdown Board 2A1-A	III	I	I	III
480-Volt Shutdown Board 2A2-A	III	I	I	III
480-Volt Shutdown Board 2B1-B	IV	II	II	IV
480-Volt Shutdown Board 2B2-B	IV	II	II	IV

Table 8.3-10 Components Having Manual Transfer Between Power Divisions

Component	Normal Supply	Alternate Supply
125V Bat Chgr I & Inverters	480V Shutdown Bd 1A2-A	480V Shutdown Bd 1B1-B
125V Bat Chgr II & Inverters	480V Shutdown Bd 1B2-B	480V Shutdown Bd 1A1-A
125V Bat Chgr III & Inverters	480V Shutdown Bd 2A2-A	480V Shutdown Bd 2B1-B
125V Bat Chgr IV & Inverters	480V Shutdown Bd 2B2-B	480V Shutdown Bd 2A1-A
125V Spare Bat Chgr 6	Reactor MOV Bd 1A2-A*	Reactor MOV Bd 1B2-B*
125V Spare Bat Chgr 7	Reactor MOV Bd 2A2-A*	Reactor MOV Bd 2B2-B*
Component Cooling System Pump C-S	480V Shutdown Bd 2B2-B	480V Shutdown Bd 1A2-A
Spent Fuel Pit Pump C-S	480V Shutdown Bd 1A1-A	480V Shutdown Bd 2B1-B
Unit 1 125V Aux Feedwater Turbine (AFWT), DC Control Power	125V DC Vital Battery Board III**	125V DC Vital Battery Board IV**
Unit 1 120V AFWT, AC Control Power	120V AC Vital Instrument Power Board 1-III	120V AC Vital Instrument Power Board 1-IV
Unit 2 125 AFWT, DC Control Power	125V DC Vital Battery Board I**	125V DC Vital Battery Board II**
Unit 2 120V AFWT, AC Control Power	120V AC Vital Instrument Power Board 2-I	120V AC Vital Instrument Power Board 2-II
Spare 125V DC Charger DC (6-S)	125V DC Vital Battery Board I***	125V Vital Battery Board II***
Spare 125V DC Charger DC (7-S)	125V DC Vital Battery Board III***	125 DC Vital Battery Board IV***

* These boards are neither the normal nor alternate supply but are the available boards from which the loads can be supplied.

** During station blackout, the 125V AFWT DC control power manual transfer switch (unit 1) must be placed and maintained in the normal position.

*** These boards are neither the normal nor alternate supply but are boards (loads) which can be connected via these switches to the spare battery chargers.

Table 8.3-11 120V A.C. Vital Instrument Power Board Load Data

Channel	1-I	1-II	1-III	1-IV	2-I	2-II	2-III	2-IV
Max Load Rating (KVA)	20.0	20.0	20.0	20.0	15.0	15.0	15.0	15.0
Load Limits (KVA)	20.0	20.0	15.0	15.0	3.0	3.0	3.0	3.0

Table 8.3-12 125 VDC Vital Battery Capacity Data

PLANT CONDITION	BATTERY	Coping time in minutes/ Battery Capacity in AMPS				
		0-1	1-30	30-180	180-210	210-240
LOSS OF ALL AC POWER	I-V	700	470	330	335	350
ACCIDENT	I-V	700	600	N/A	N/A	N/A

NOTES:

1.Battery chargers are rated at 200 amps and require less than 50 amps for battery charging.

2.Maximum battery charging load other than charging is less than 150 amps.

Table 8.3-13 Deleted by Amendment 75

Table 8.3-14 Deleted by Amendment 75

Table 8.3-15 Deleted by Amendment 75

Table 8.3-16 Deleted by Amendment 75

Table 8.3-17 Deleted by Amendment 75

Table 8.3-18 Deleted by Amendment 75

Table 8.3-19 Deleted by Amendment 71. Data is in Figure 8.3-47

Table 8.3-20 Deleted by Amendment 71. Data is in Figure 8.3-48

Table 8.3-21 Deleted by Amendment 71. Data is in Figure 8.3-49

Table 8.3-22 Deleted by Amendment 71. Data is in Figure 8.3-50

Table 8.3-23 Deleted by Amendment 75

Table 8.3-24 Deleted by Amendment 75

Table 8.3-25 Deleted by Amendment 75

Table 8.3-26 Deleted by Amendment 75

Table 8.3-27 Vital 125v D.c. Battery Loss Concurrent With Loss of Offsite Power

		Safety-related 120V A.C.	
		Instrument Power Board Failure Effect	
Battery	**D.C. Control Power Failure Effect**	**Multiple Failures**	**Channels**
I	'A' Train Class 1E Power System (Unit 1 & Unit 2)	SSPS(A) & (B) Ch I Input Relays	1-I, 2-I
		NIS Ch 1 Volt Reg Inst Power	1-I, 2-I
		NIS Control Power Ch I	1-I, 2-I
		Process Protection Set I	1-I, 2-I
II	'B' Train Class 1E Power System (Unit 1 & Unit 2)	SSPS(A) &(B) Ch II Input Relays	1-II, 2-II
		NIS Ch II Volt Reg Inst. Power	1-II, 2-II
		NIS Control Power Ch II	1-II, 2-II
		Process Protection Set II	1-II, 2-II
III	'A' Train Class 1E Power System (Unit 1 & Unit 2)	SSPS(A) & (B) Ch III Input Relays	1-III, 2-III
		NIS Ch III Volt Reg Inst Relays	I-III, 2-III
		NIS Cont Power Ch III	I-III, 2-III
		Process Protection Set III	1-III, 2-III
IV	'B' Train Class 1E Power System (Unit 1 & Unit 2)	SSPS(A) & (B) Ch IV Input Relays	1-IV, 2-IV
		NIS Ch IV Volt Reg Inst. Relays	1-IV, 2-IV
		NIS Cont Power CH IV	1-IV, 2-IV
		Process Protection Set IV	1-IV, 2-IV

Table 8.3-28 Major Electrical Equipment That Could Become Submerged Following A Loca

Equipment	Evaluation
Motors for the fans of the control rod drive mechanism coolers	These coolers are used to maintain the ambient temperature in the area of the control rod drives within an acceptable range during normal operation. The CRDM coolers are required for safe shutdown per 10 CFR50 Appendix R. Their function is not required for LOCA mitigation (Ref. Section 9.4.7)
Reactor Coolant Drain Tank Pumps	These pumps remove from inside containment the normal leakage of the reactor coolant system that has been collected in the reactor coolant drain tank. This is not a safety function. The discharge path of the pumps is automatically isolated in a LOCA. (Ref. Section 9.3.3.3)
Floor and Equipment Drain Sump Pumps	These pumps remove from inside containment any leakage inside containment that is not collected in the reactor coolant drain tank. This is not a safety function. The discharge path of the pumps is automatically isolated in a LOCA (Ref. Section 9.3.3.3)
Pressurizer Heaters	Automatically deenergized in the event of a LOCA.
Reactor Lower Compartment Cooler Fans	These fans are required for safe shutdown per 10 CFR 50 Appendix R. Also, they are required to perform the safety-related function of operating after a non-LOCA accident to recirculate air through lower containment and equipment compartments. This system is not required to perform after a LOCA (refer to Section 9.4.7).

Sensitive
Figure 8.3-1 through 8.3-3 redacted under 10CFR 2.390

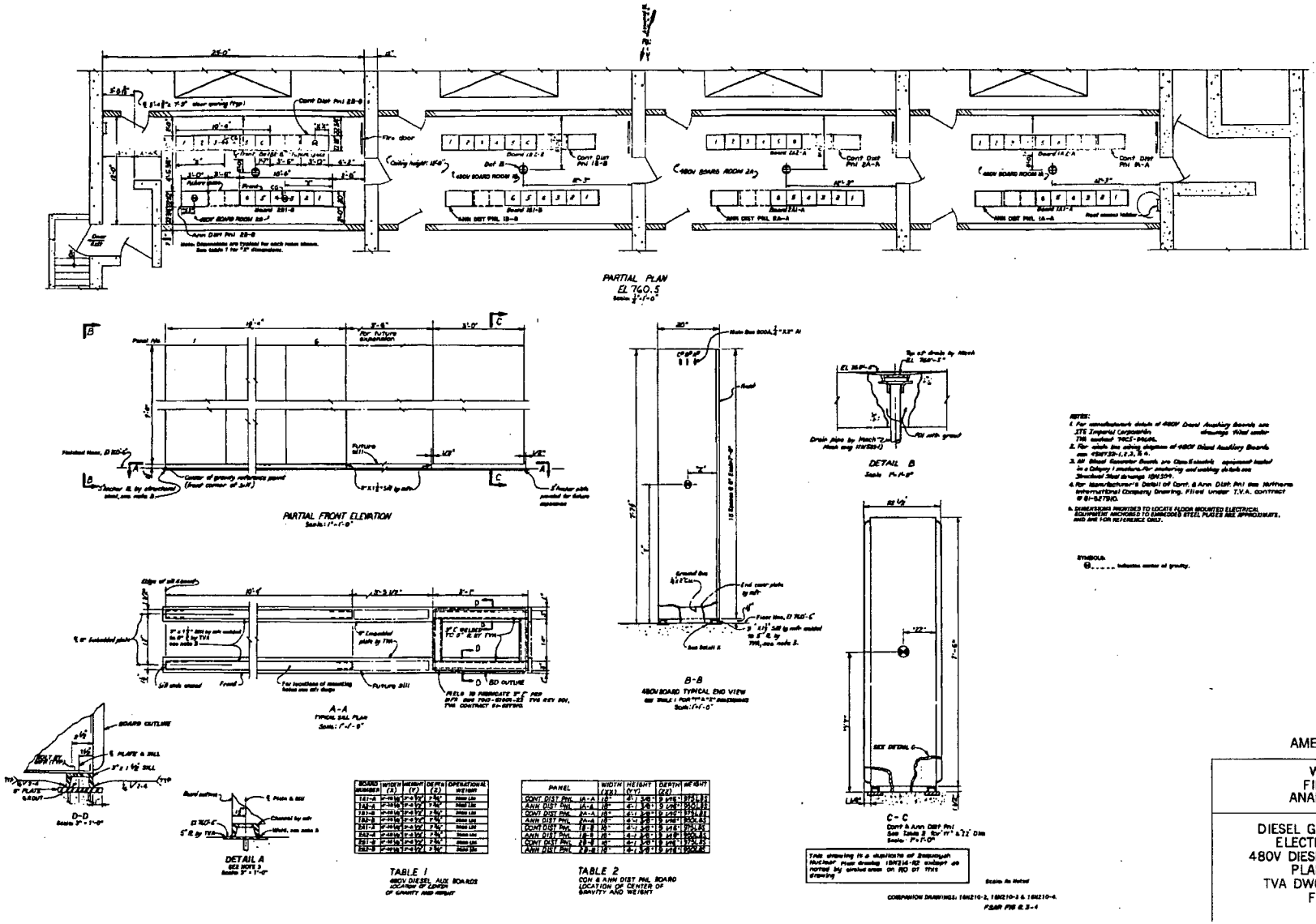

AMENDMENT 75

WATTS BAR
FINAL SAFETY
ANALYSIS REPORT

DIESEL GENERATOR BUILDING
ELECTRICAL EQUIPMENT
480V DIESEL AUXILIARY BOARDS
PLANS & SECTIONS
TVA DWG NO. 15N210-1 R6
FIGURE 8.3-4

Figure 8.3-4 Diesel Generator Building Electrical Equipment 480V Diesel Auxiliary Boards Plans and Sections

Sensitive
Figure 8.3-4b redacted under 10CFR 2.390

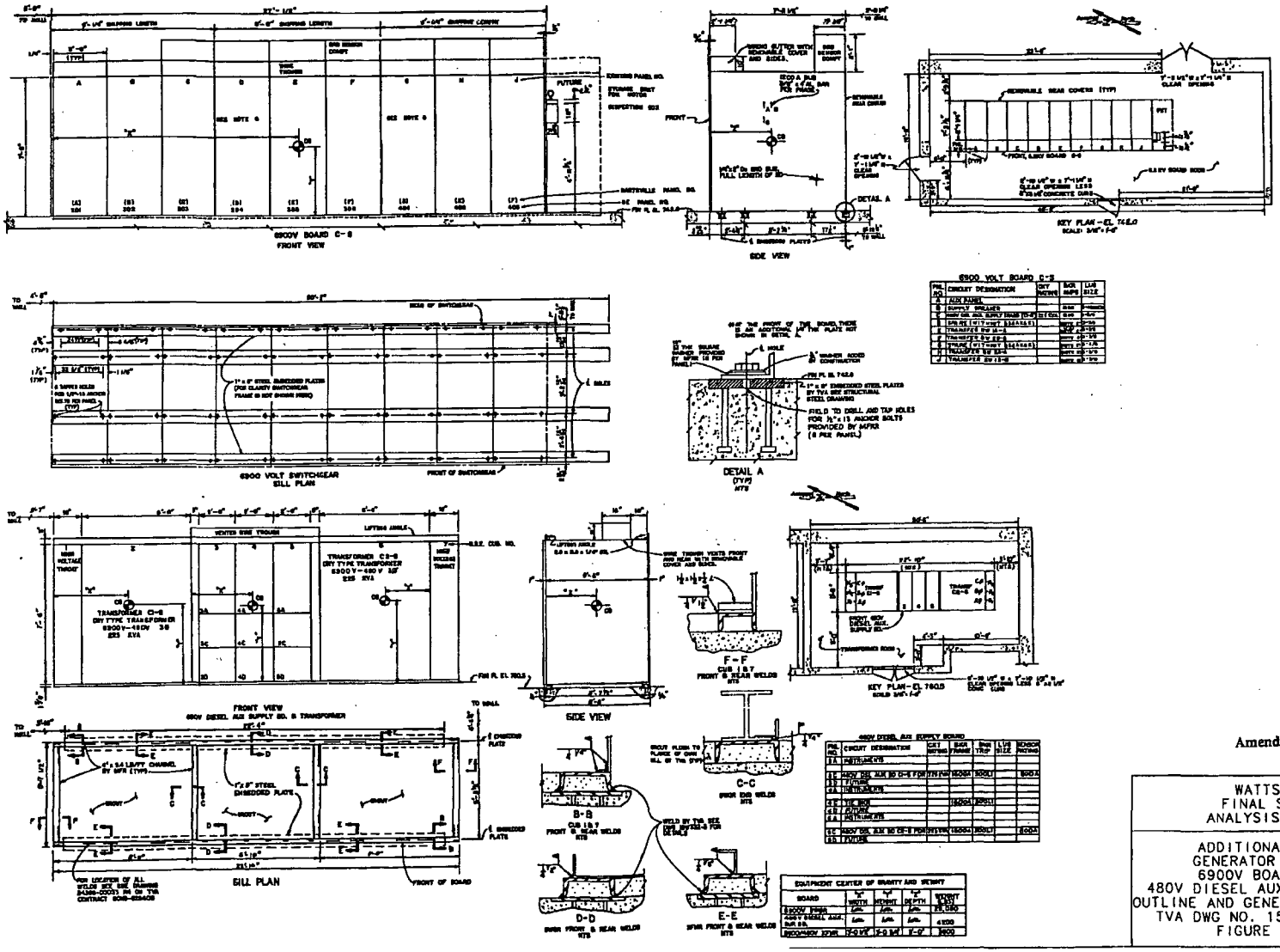

Amendment 89

WATTS BAR
FINAL SAFETY
ANALYSIS REPORT

ADDITIONAL DIESEL
GENERATOR BUILDING
6900V BOARD C-S &
480V DIESEL AUX SUPPLY BOARD
OUTLINE AND GENERAL ARRANGEMENT
TVA DWG NO. 15N211-3 R5
FIGURE 8.3-4C

Figure 8.3-4c Additional Diesel Generator Building 6900V Board C-Sand 480V Diesel Aux. Supply Board Outline and General Arrangement

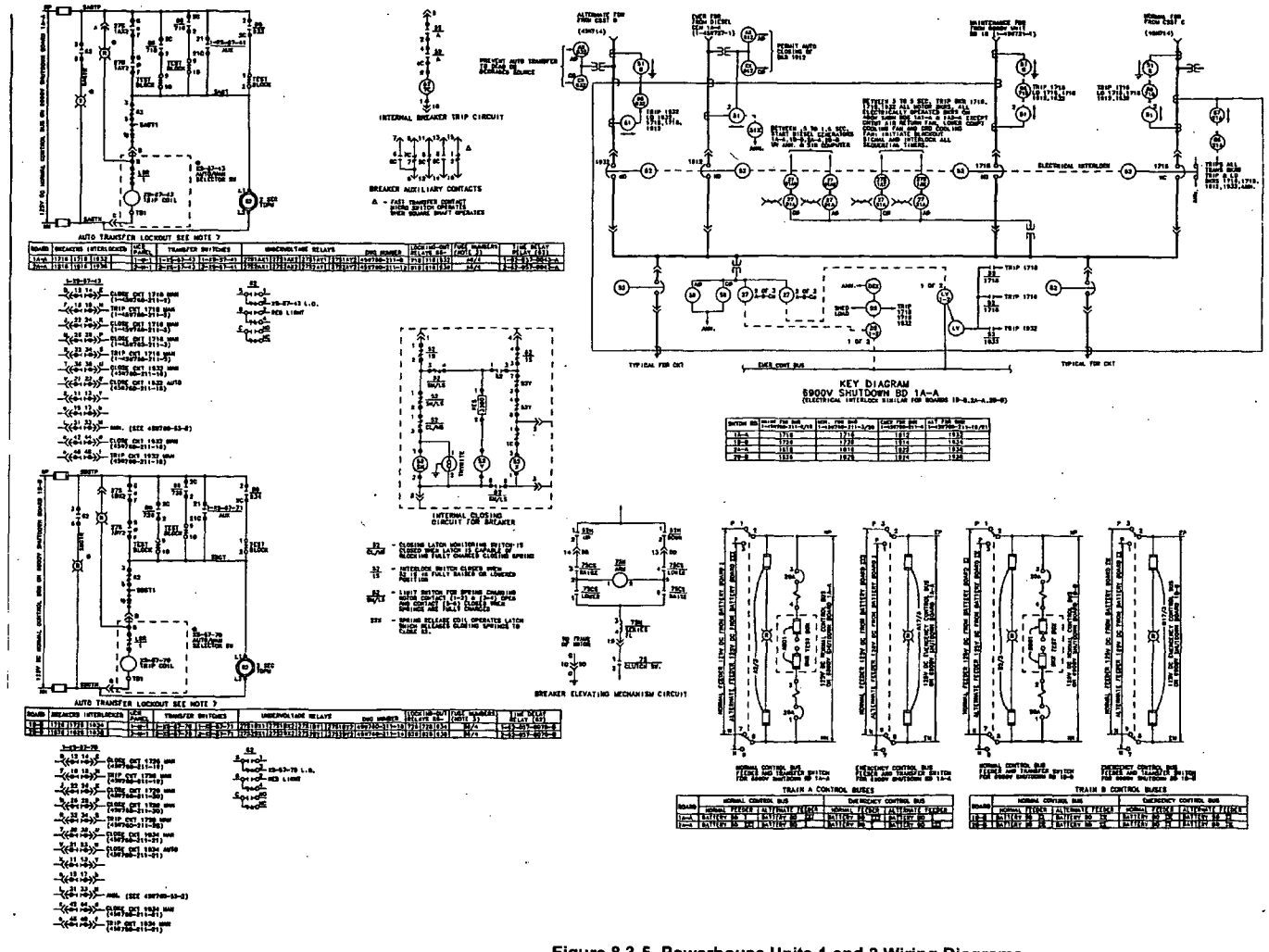

Amendment 89

WATTS BAR
FINAL SAFETY
ANALYSIS REPORT

POWERHOUSE
UNITS 1 & 2
WIRING DIAGRAMS
6900V SHUTDOWN POWER
SCHEMATIC DIAGRAM
TVA DWG NO. 1-45W760-211-1 R11
FIGURE 8.3-5

Figure 8.3-5 Powerhouse Units 1 and 2 Wiring Diagrams 6900V Shutdown Power Schematic Diagram

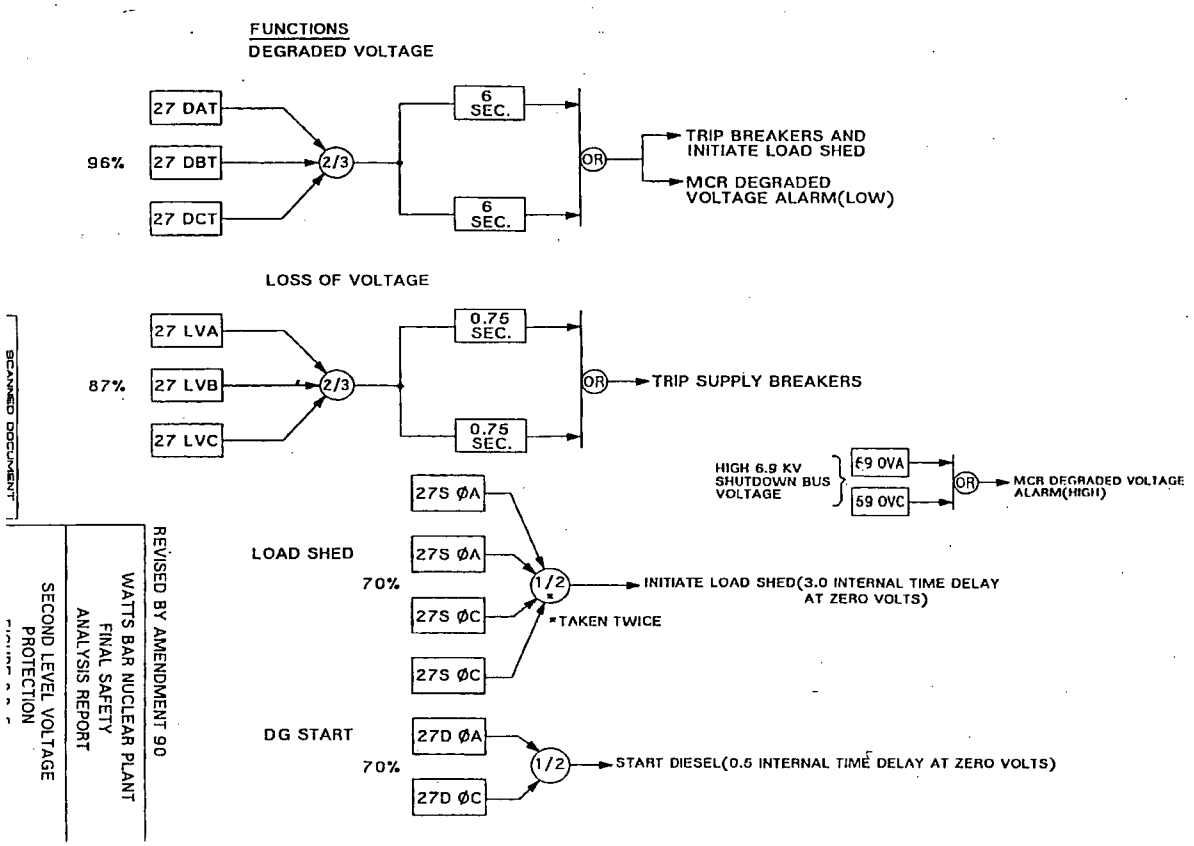

SCANNED DOCUMENT

REVISED BY AMENDMENT 90
WATTS BAR NUCLEAR PLANT
FINAL SAFETY
ANALYSIS REPORT
SECOND LEVEL VOLTAGE
PROTECTION

Figure 8.3-5a Second Level Voltage Protection

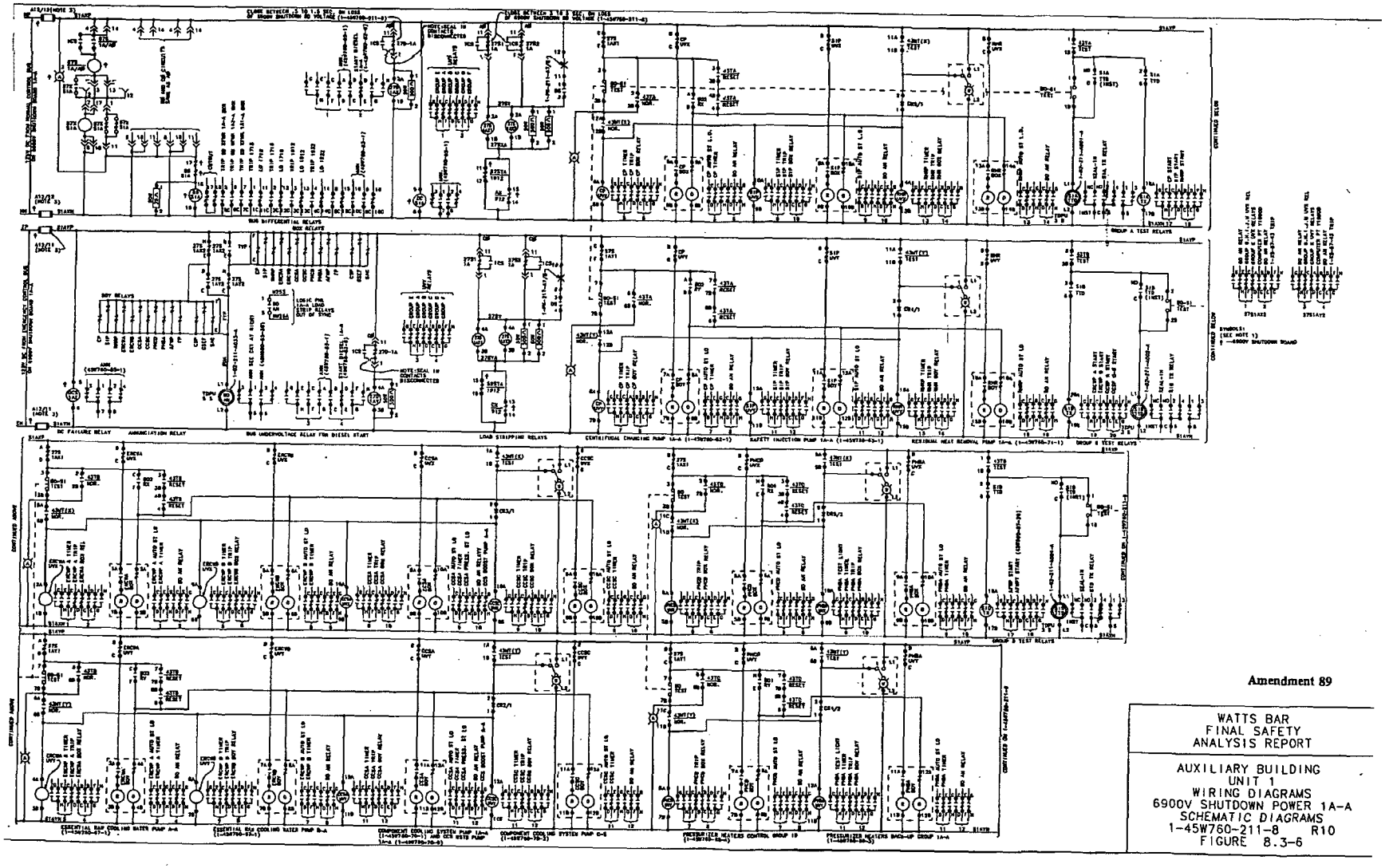

Amendment 89

WATTS BAR
FINAL SAFETY
ANALYSIS REPORT

AUXILIARY BUILDING
UNIT 1
WIRING DIAGRAMS
6900V SHUTDOWN POWER 1A-A
SCHEMATIC DIAGRAMS
1-45W760-211-8 R10
FIGURE 8.3-6

PROCADAM MAINTAINED DRAWING

Figure 8.3-6 Auxillary Building Unit 1 Wiring Diagrams 6900V Shutdown Power 1A-A Schematic Diagrams

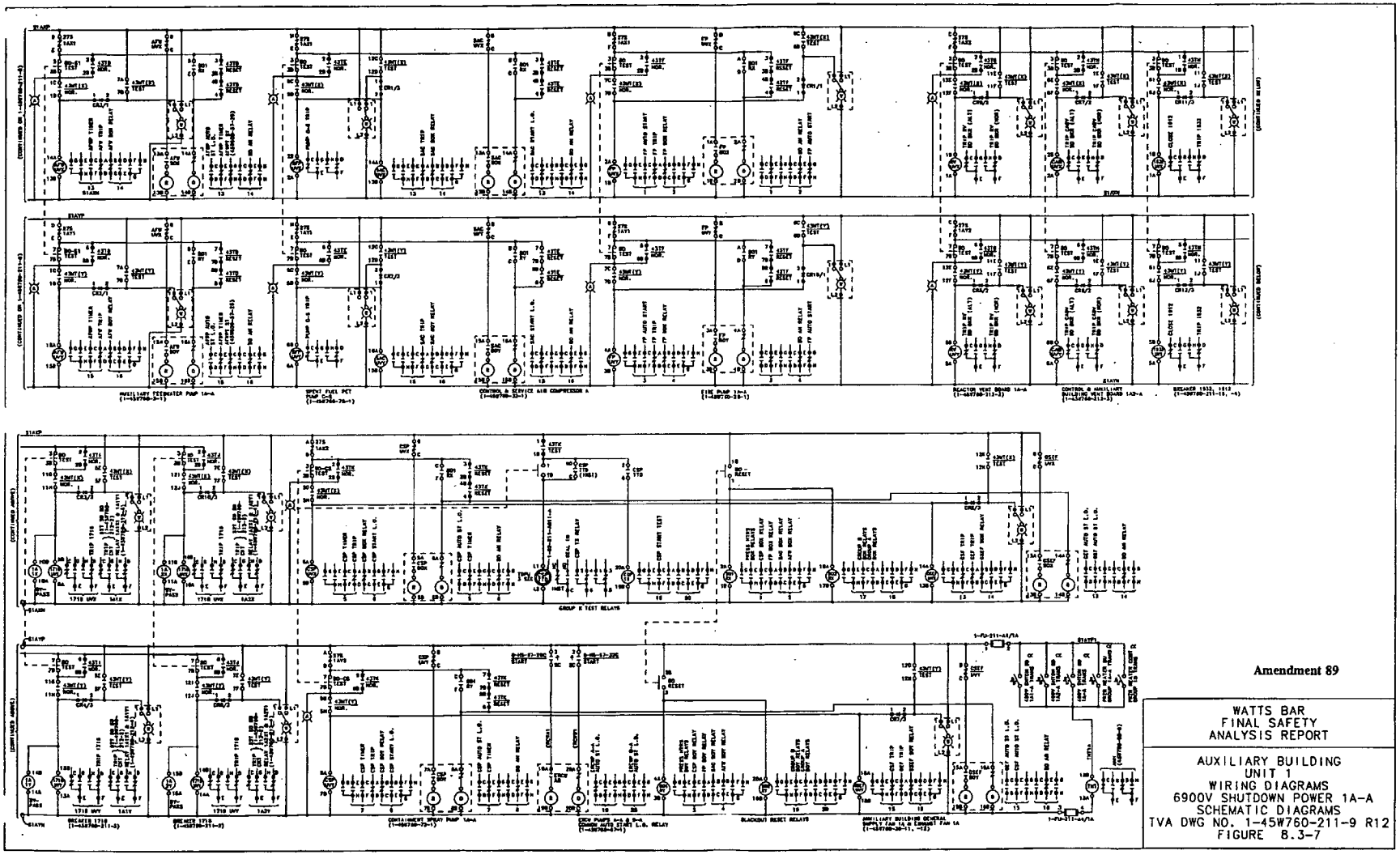

Figure 8.3-7 Auxiliary Building Unit 1 Wiring Diagrams 6900V Shutdown Power 1A-A Schematic Diagrams

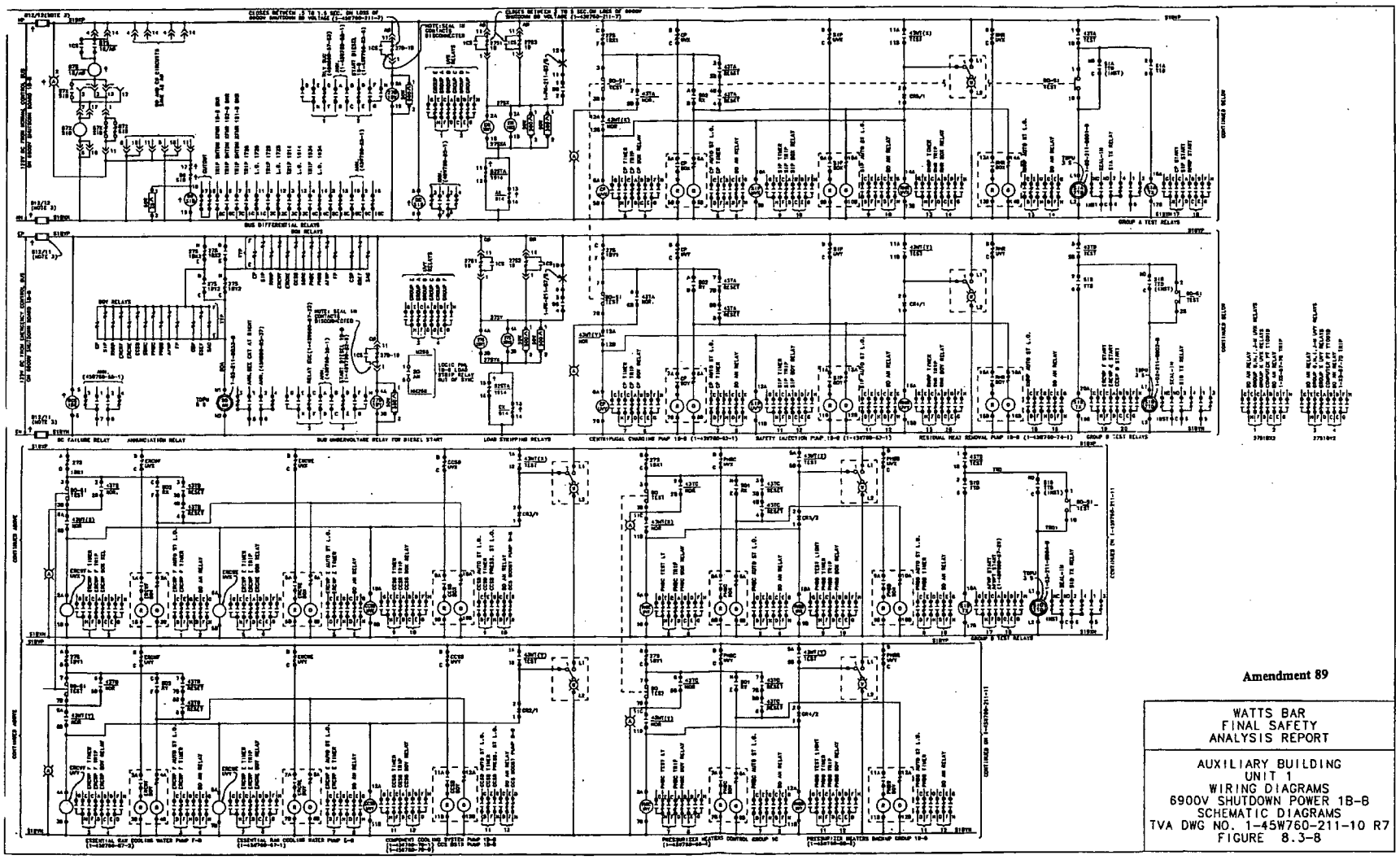

Amendment 89

WATTS BAR
FINAL SAFETY
ANALYSIS REPORT

AUXILIARY BUILDING
UNIT 1
WIRING DIAGRAMS
6900V SHUTDOWN POWER 1B-B
SCHEMATIC DIAGRAMS
TVA DWG NO. 1-45W760-211-10 R7
FIGURE 8.3-8

Figure 8.3-8 Auxiliary Building Unit 1 Wiring Diagrams 6900V Shutdown Power 1B-B Schematic Diagrams

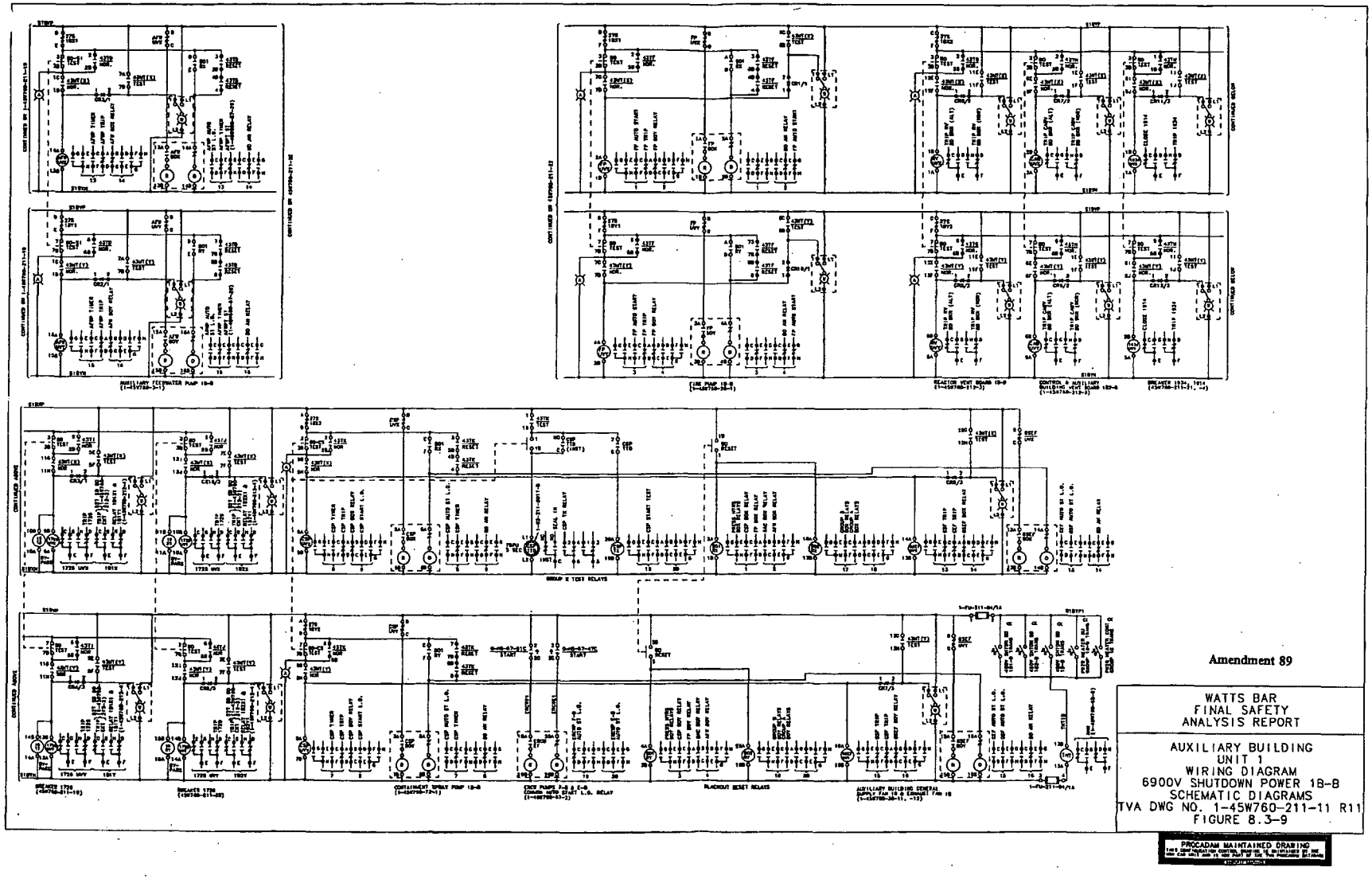

Figure 8.3-9 Auxiliary Building Unit 1 Wiring Diagrams 6900V Shutdown Power 1B-B Schematic Diagrams

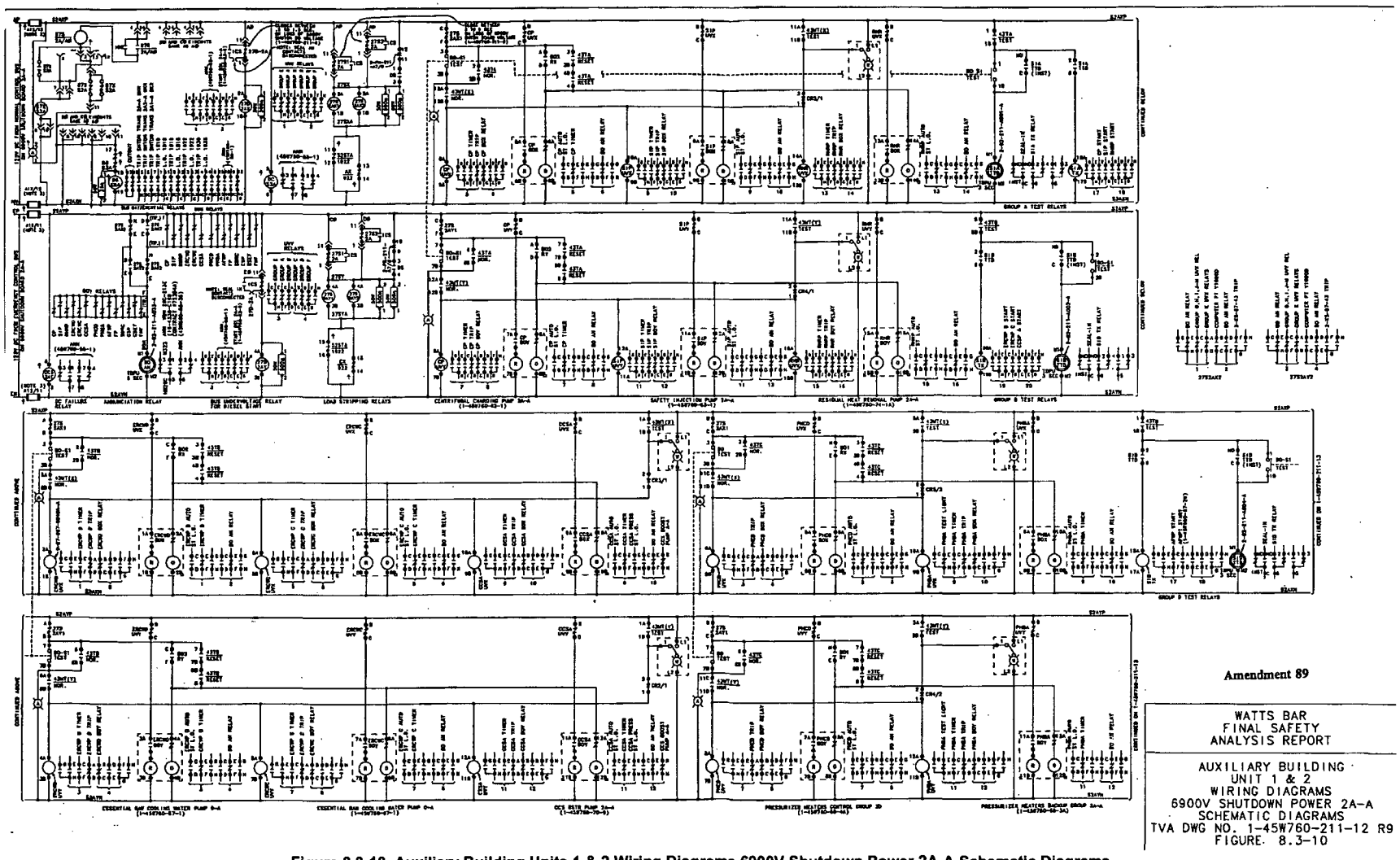

Amendment 89

WATTS BAR
FINAL SAFETY
ANALYSIS REPORT

AUXILIARY BUILDING
UNIT 1 & 2
WIRING DIAGRAMS
6900V SHUTDOWN POWER 2A-A
SCHEMATIC DIAGRAMS
TVA DWG NO. 1-45W760-211-12 R9
FIGURE 8.3-10

Figure 8.3-10 Auxiliary Building Units 1 & 2 Wiring Diagrams 6900V Shutdown Power 2A-A Schematic Diagrams

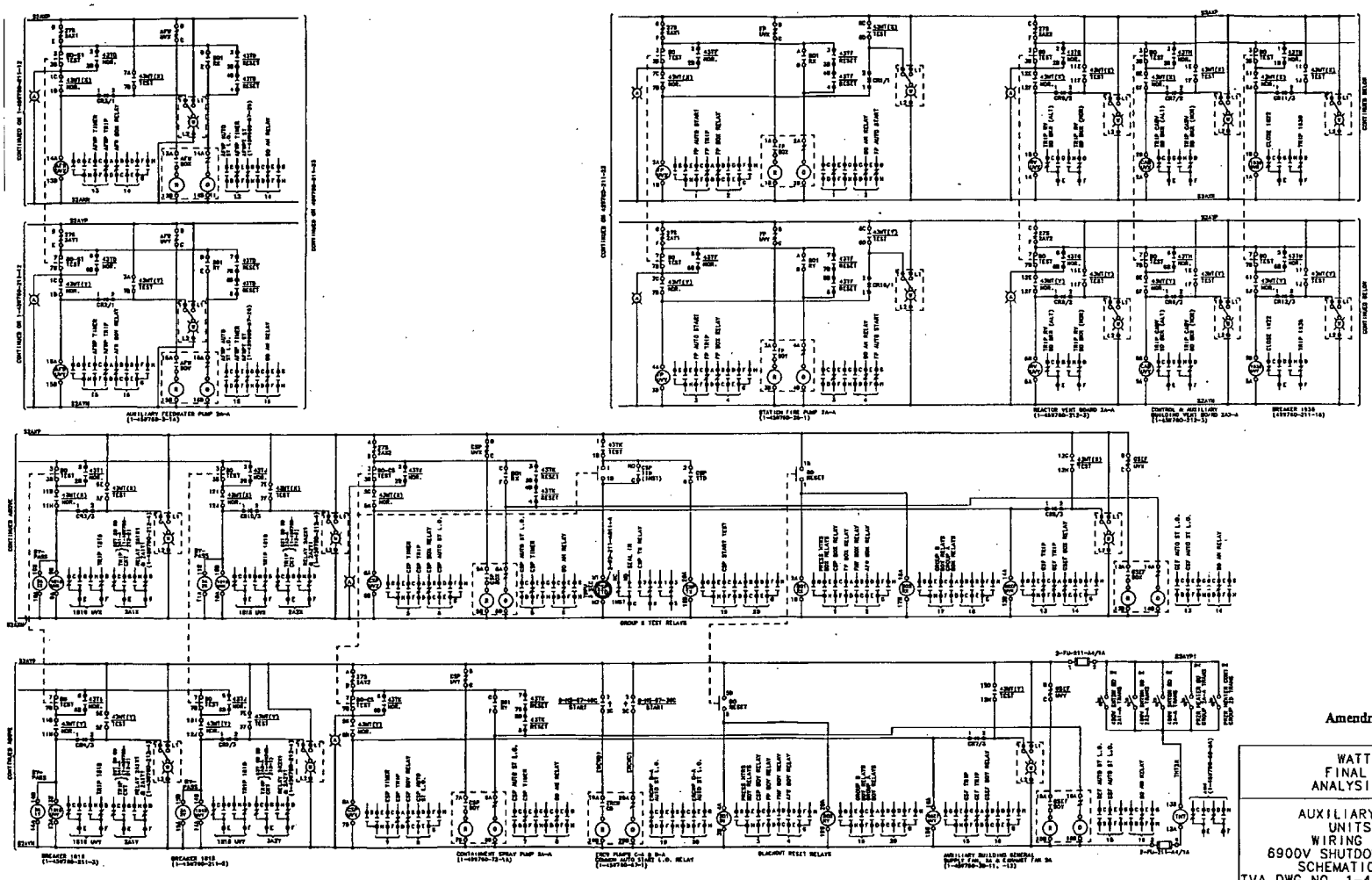

Amendment 89

WATTS BAR
FINAL SAFETY
ANALYSIS REPORT

AUXILIARY BUILDING
UNITS 1 & 2
WIRING DIAGRAMS
6900V SHUTDOWN POWER 2A-A
SCHEMATIC DIAGRAMS
TVA DWG NO. 1-45W760-211-13 R1
FIGURE 8.3-11

Figure 8.3-11 Auxiliary Building Units 1 & 2Wiring Diagrams 6900V Shutdown Power 2A-A Schematic Diagrams

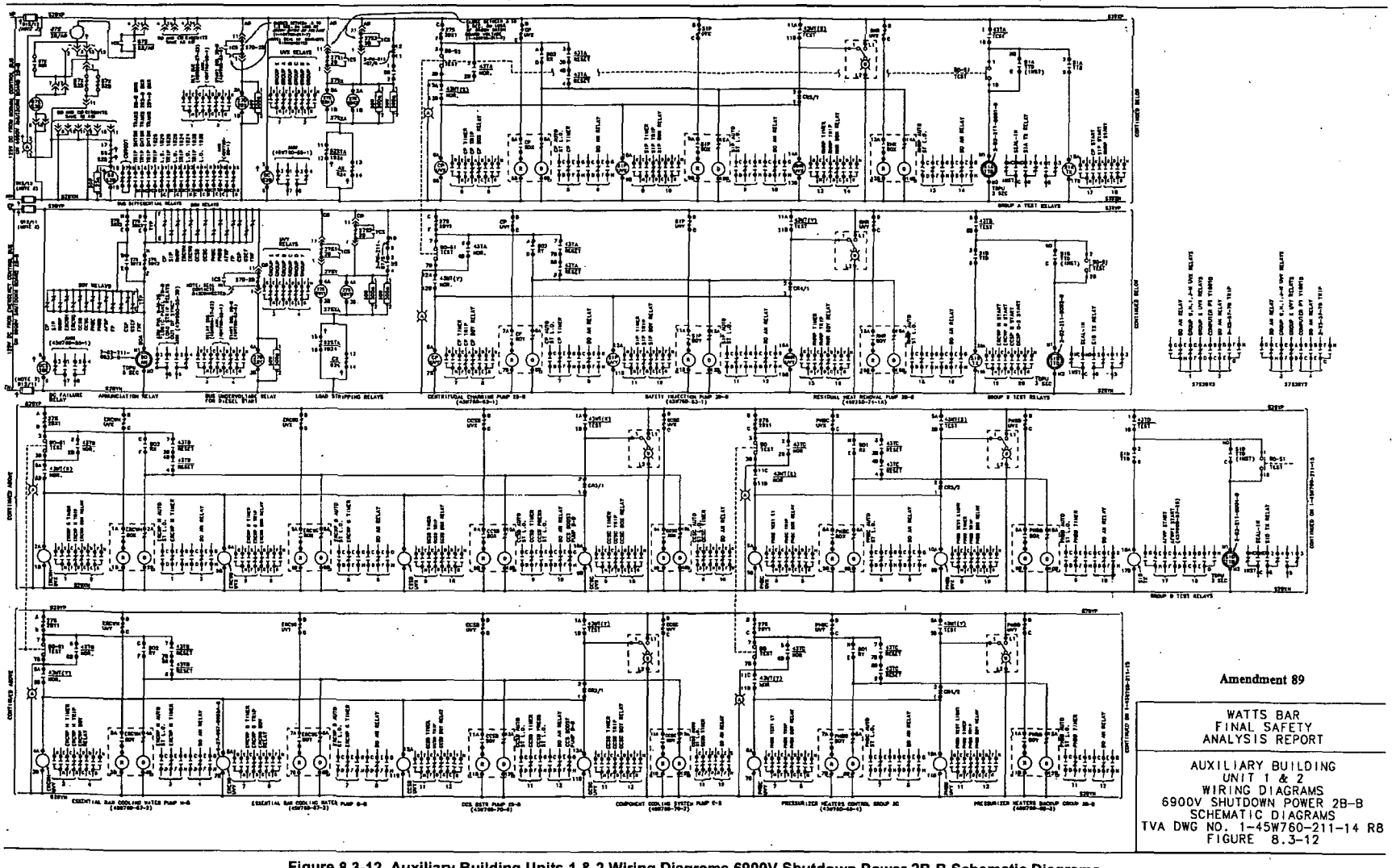

Amendment 89

WATTS BAR
FINAL SAFETY
ANALYSIS REPORT

AUXILIARY BUILDING
UNIT 1 & 2
WIRING DIAGRAMS
6900V SHUTDOWN POWER 2B-B
SCHEMATIC DIAGRAMS
TVA DWG NO. 1-45W760-211-14 R8
FIGURE 8.3-12

Figure 8.3-12 Auxiliary Building Units 1 & 2 Wiring Diagrams 6900V Shutdown Power 2B-B Schematic Diagrams

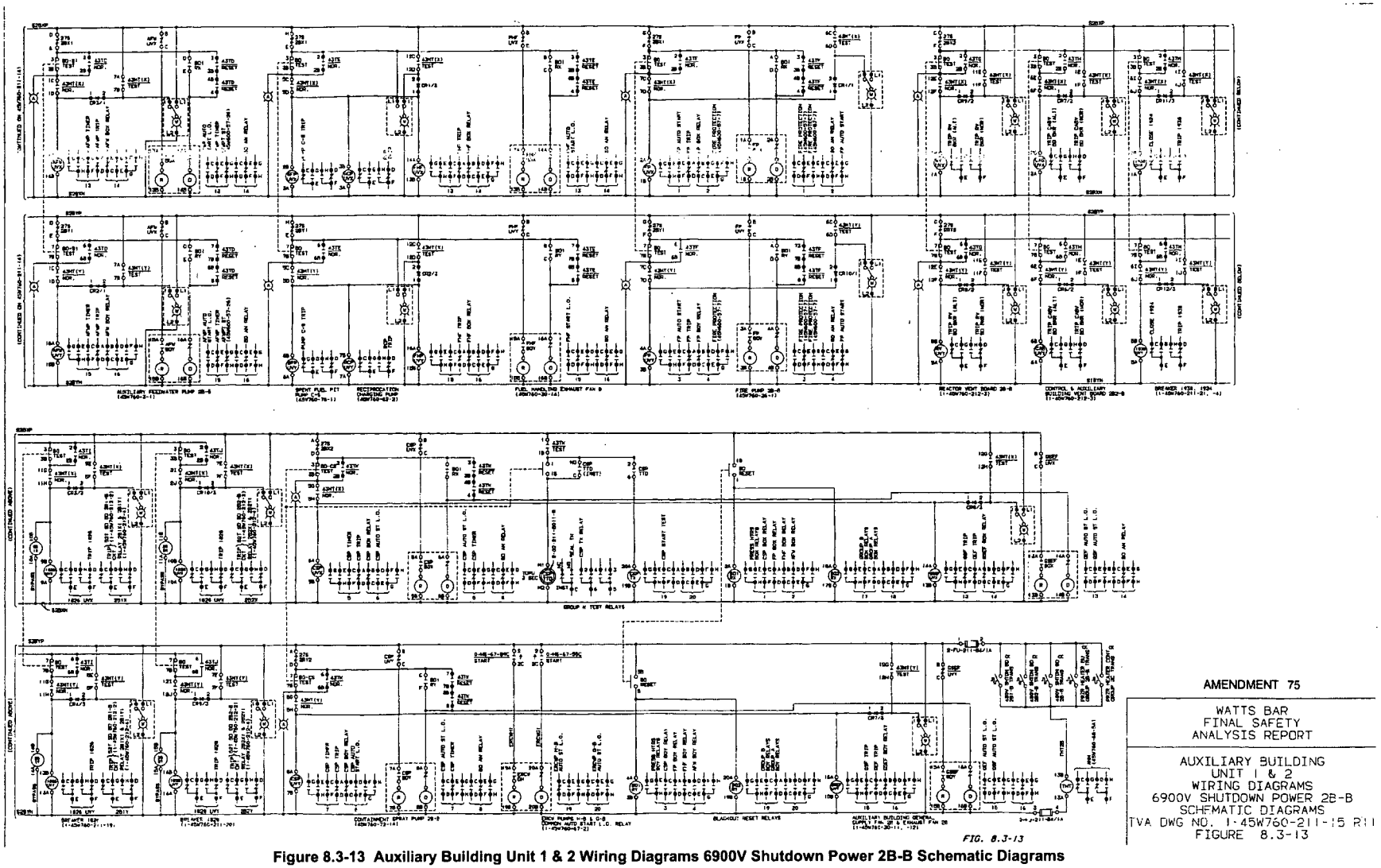

Figure 8.3-13 Auxiliary Building Unit 1 & 2 Wiring Diagrams 6900V Shutdown Power 2B-B Schematic Diagrams

Figure 8.3-14 Deleted by Amendment 88

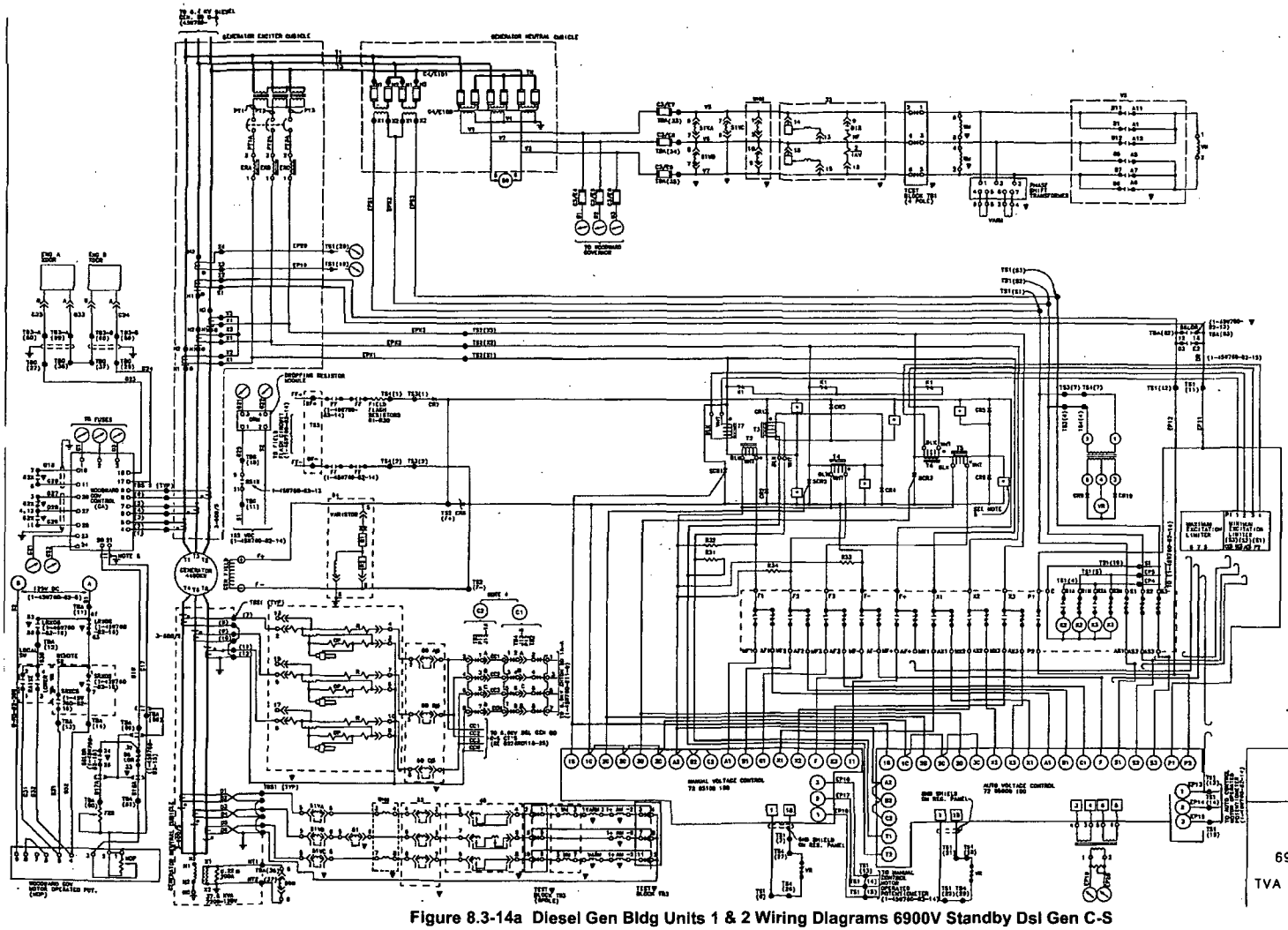

Amendment 89

WATTS BAR
FINAL SAFETY
ANALYSIS REPORT

DIESEL GEN BLDG
UNITS 1 & 2
WIRING DIAGRAMS
6900V STANDBY DSL GEN C-S
SCHEMATIC DIAGRAMS
TVA DWG NO. 1-45W760-82-11 R2
FIGURE 8.3-14A

Figure 8.3-14a Diesel Gen Bldg Units 1 & 2 Wiring Diagrams 6900V Standby Dsl Gen C-S

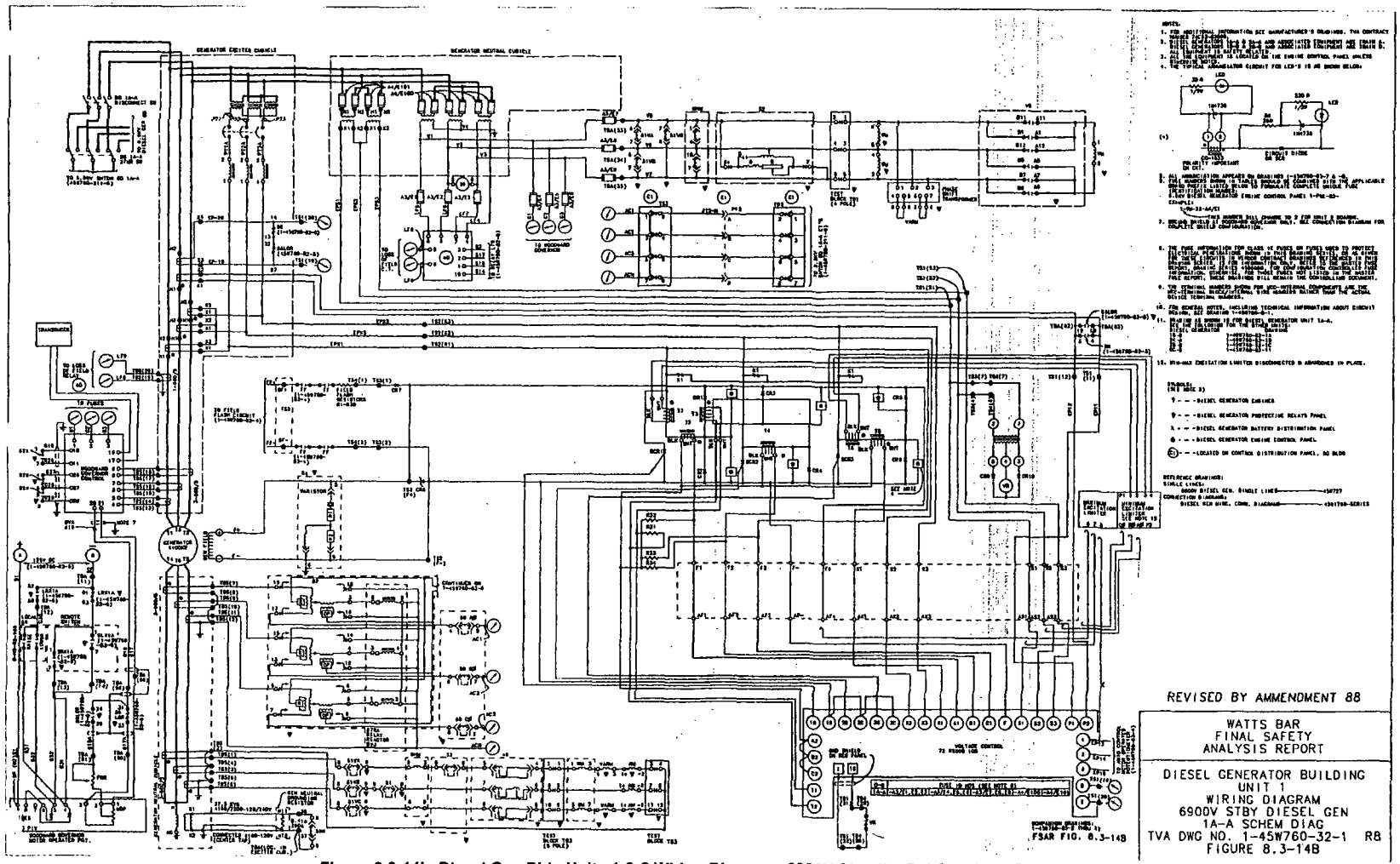

Figure 8.3-14b Diesel Gen Bldg Units 1 & 2 Wiring Diagrams 6900V Standby Dsl Gen 1A-A Schematic Diagram

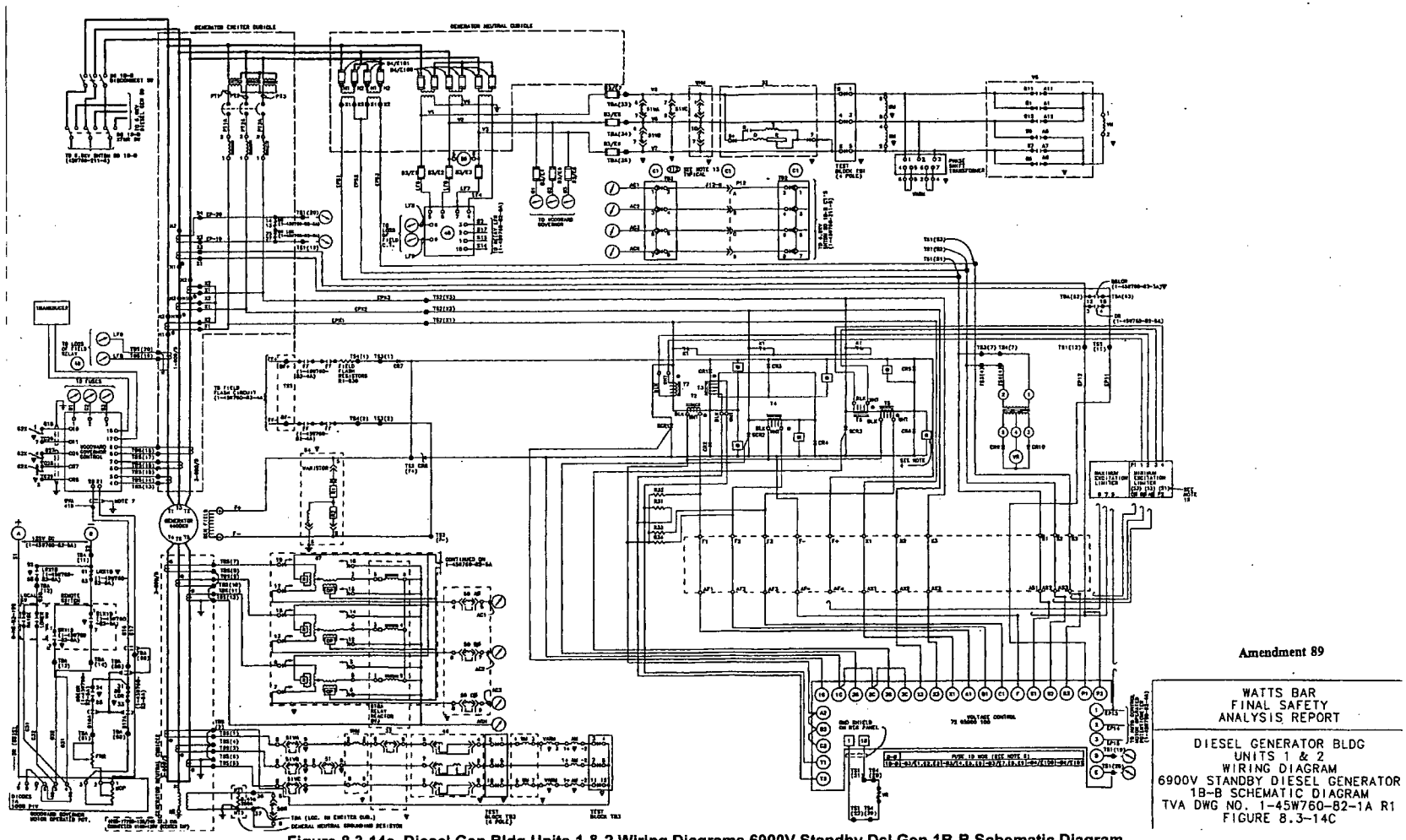

Amendment 89

WATTS BAR
FINAL SAFETY
ANALYSIS REPORT

DIESEL GENERATOR BLDG
UNITS 1 & 2
WIRING DIAGRAM
6900V STANDBY DIESEL GENERATOR
1B-B SCHEMATIC DIAGRAM
TVA DWG NO. 1-45W760-82-1A R1
FIGURE 8.3-14C

Figure 8.3-14c Diesel Gen Bldg Units 1 & 2 Wiring Diagrams 6900V Standby Dsl Gen 1B-B Schematic Diagram

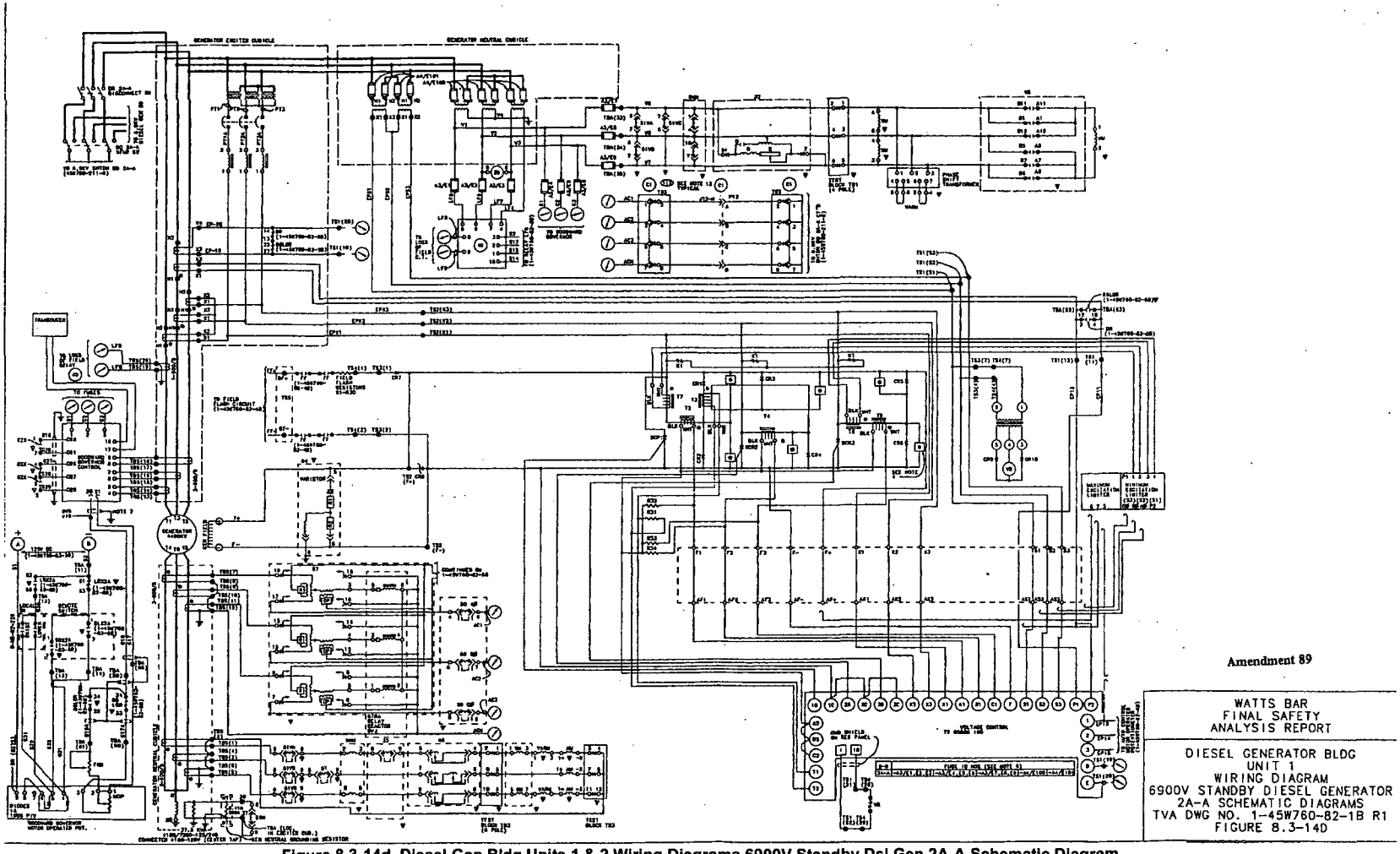

Figure 8.3-14d Diesel Gen Bldg Units 1 & 2 Wiring Diagrams 6900V Standby Dsl Gen 2A-A Schematic Diagram

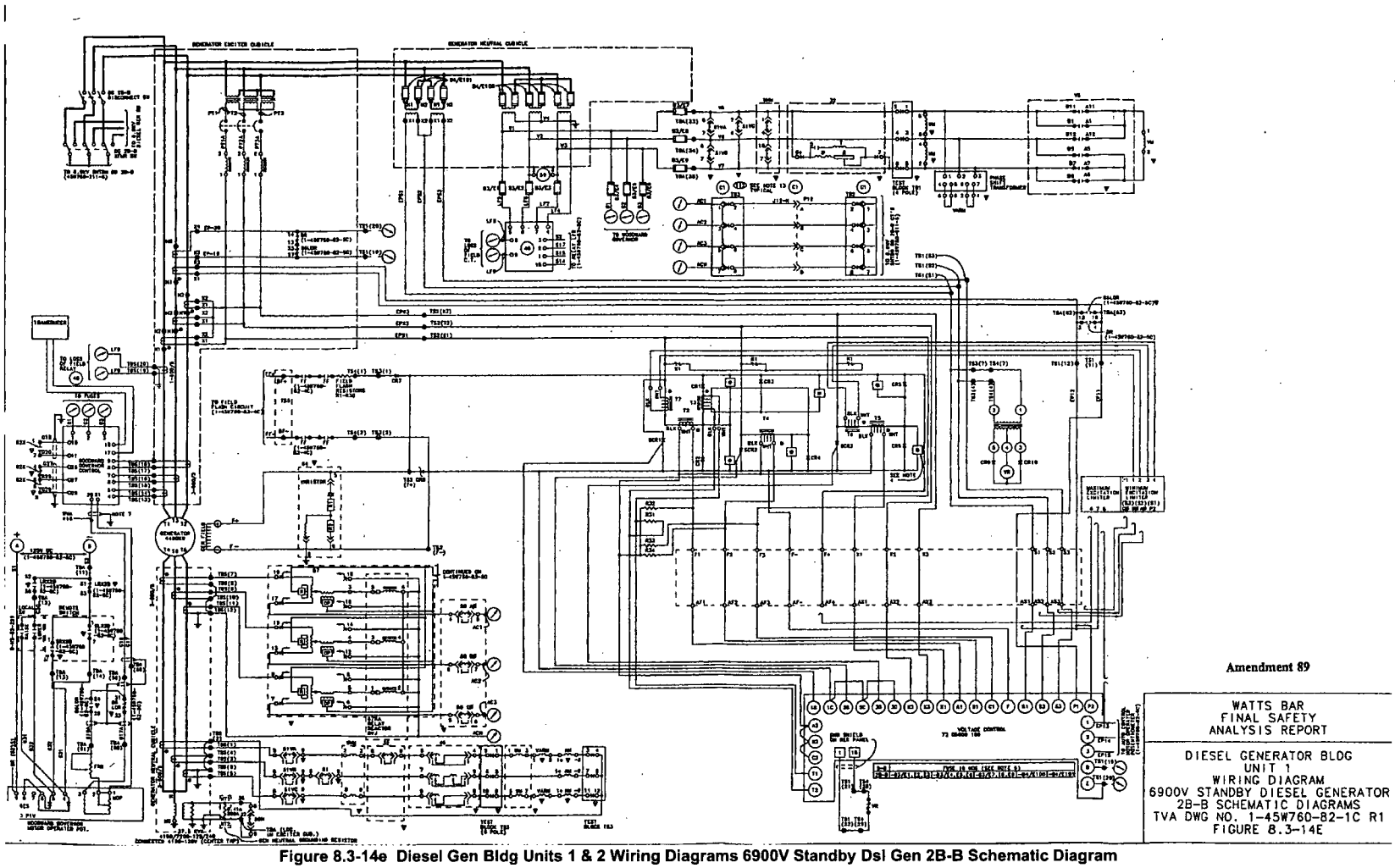

Figure 8.3-14e Diesel Gen Bldg Units 1 & 2 Wiring Diagrams 6900V Standby Dsl Gen 2B-B Schematic Diagram

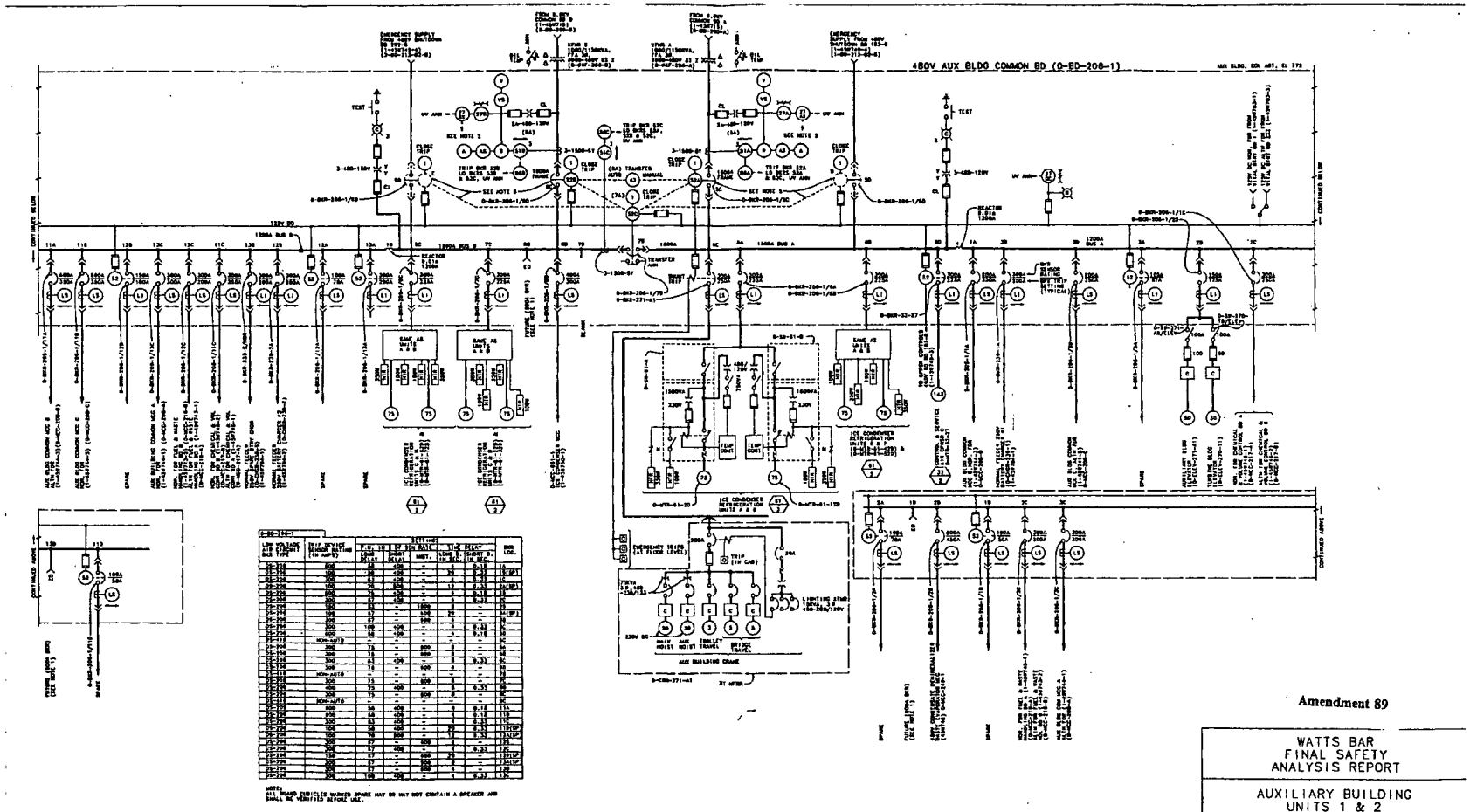

Figure 8.3-15 Auxiliary Building Units 1 & 2 Wiring Diagram 480V Aux Bldg Common BD Single Line

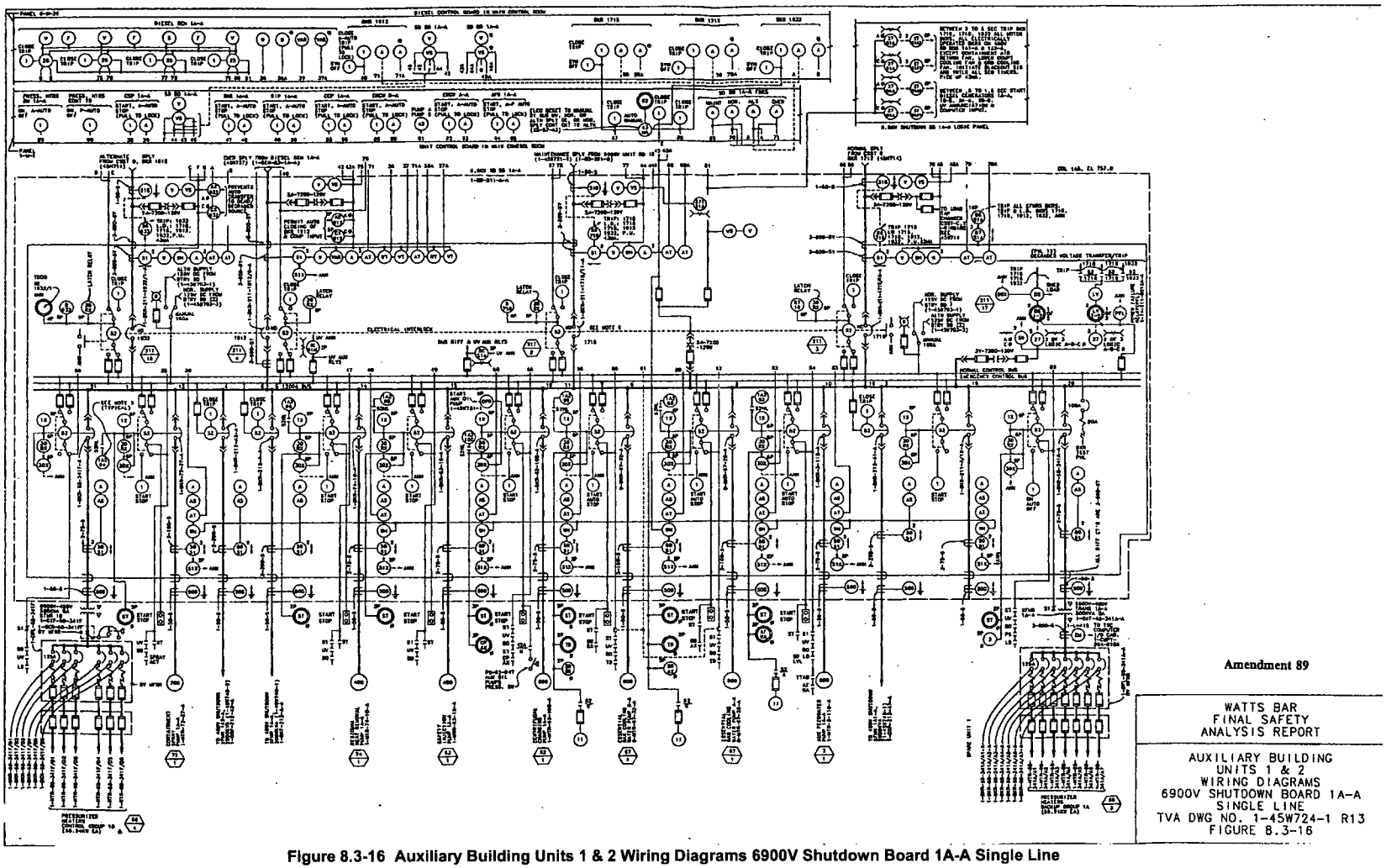

Amendment 89

WATTS BAR
FINAL SAFETY
ANALYSIS REPORT

AUXILIARY BUILDING
UNITS 1 & 2
WIRING DIAGRAMS
6900V SHUTDOWN BOARD 1A-A
SINGLE LINE
TVA DWG NO. 1-45W724-1 R13
FIGURE 8.3-16

Figure 8.3-16 Auxiliary Building Units 1 & 2 Wiring Diagrams 6900V Shutdown Board 1A-A Single Line

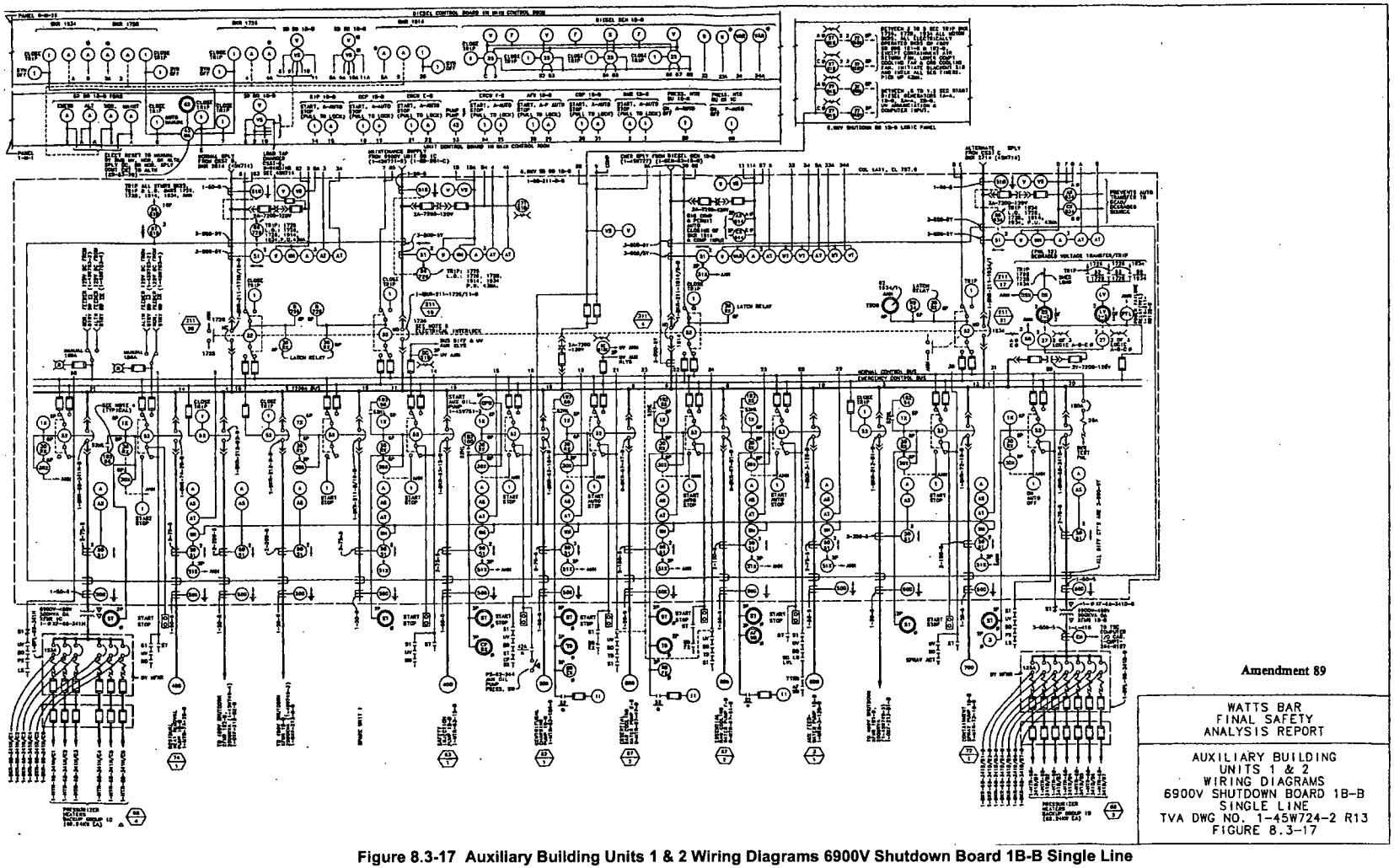

Amendment 89

WATTS BAR
FINAL SAFETY
ANALYSIS REPORT

AUXILIARY BUILDING
UNITS 1 & 2
WIRING DIAGRAMS
6900V SHUTDOWN BOARD 1B-B
SINGLE LINE
TVA DWG NO. 1-45W724-2 R13
FIGURE 8.3-17

Figure 8.3-17 Auxiliary Building Units 1 & 2 Wiring Diagrams 6900V Shutdown Board 1B-B Single Line

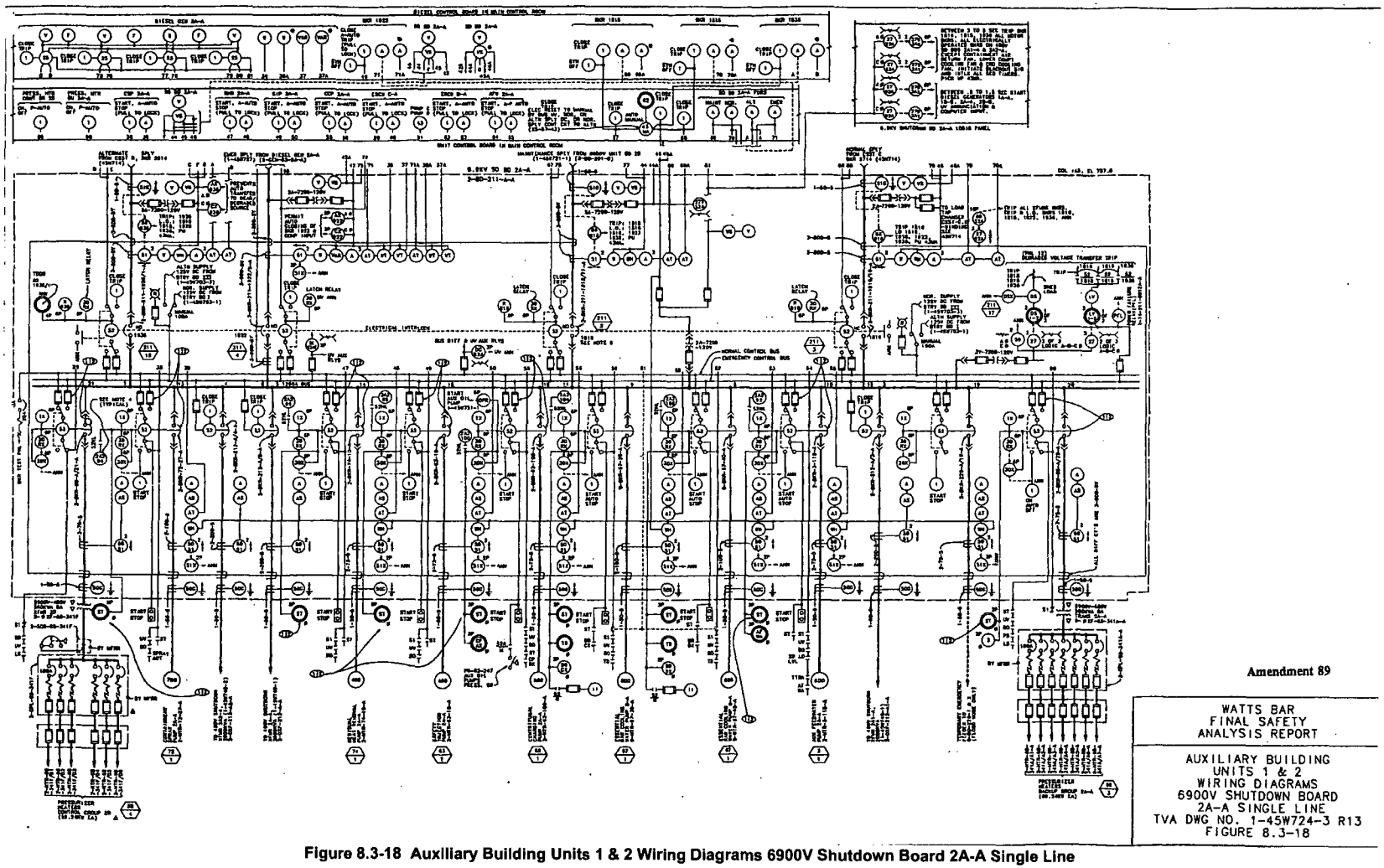

Amendment 89

WATTS BAR
FINAL SAFETY
ANALYSIS REPORT

AUXILIARY BUILDING
UNITS 1 & 2
WIRING DIAGRAMS
6900V SHUTDOWN BOARD
2A-A SINGLE LINE
TVA DWG NO. 1-45W724-3 R13
FIGURE 8.3-18

Figure 8.3-18 Auxiliary Building Units 1 & 2 Wiring Diagrams 6900V Shutdown Board 2A-A Single Line

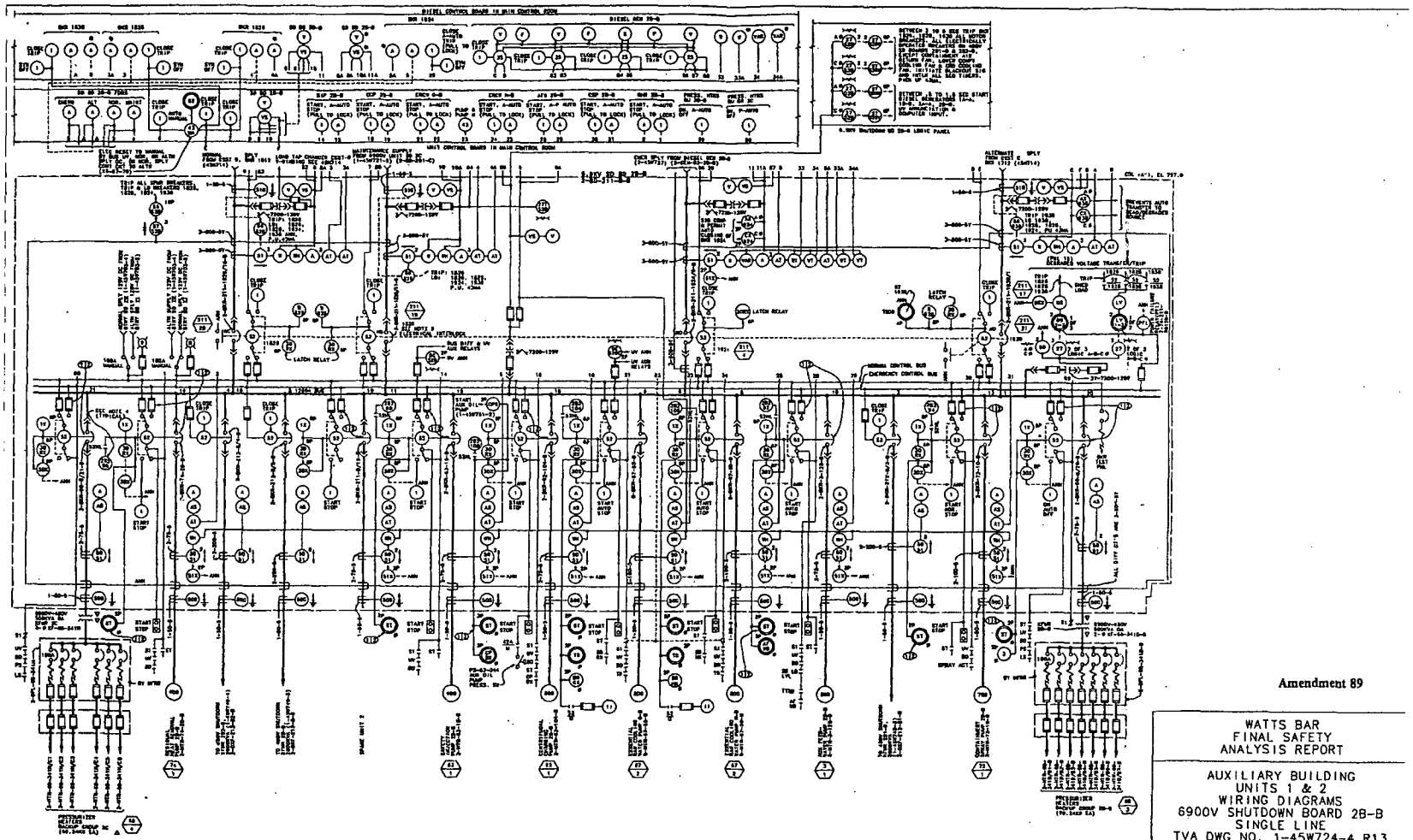

Amendment 89

WATTS BAR
FINAL SAFETY
ANALYSIS REPORT

AUXILIARY BUILDING
UNITS 1 & 2
WIRING DIAGRAMS
6900V SHUTDOWN BOARD 2B-B
SINGLE LINE
TVA DWG NO. 1-45W724-4 R13
FIGURE 8.3-19

Figure 8.3-19 Auxiliary Building Units 1 & 2 Wiring Diagrams 6900V Shutdown Board 2B-B Single Line

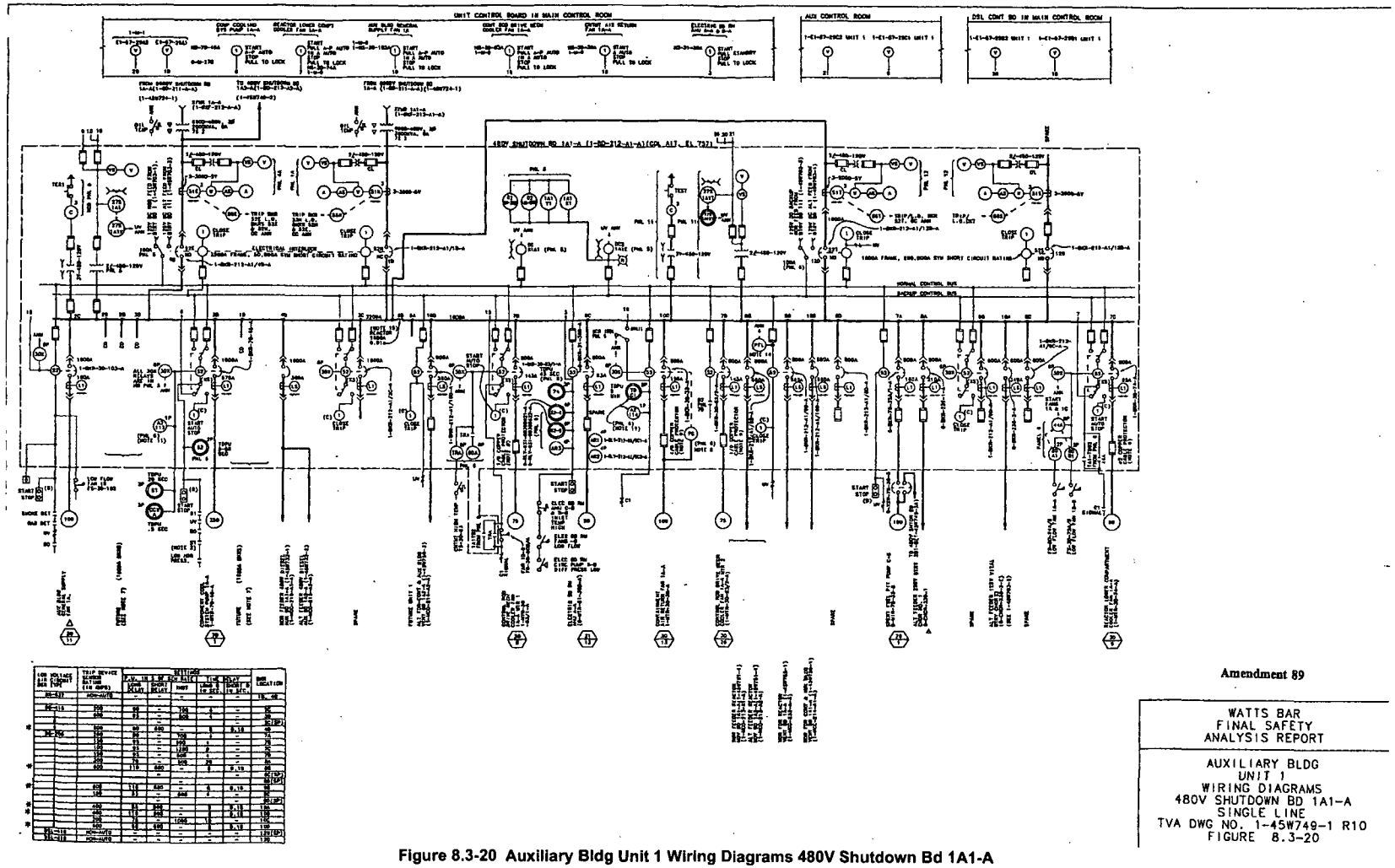

Amendment 89

WATTS BAR FINAL SAFETY ANALYSIS REPORT
AUXILIARY BLDG UNIT 1 WIRING DIAGRAMS 480V SHUTDOWN BD 1A1-A SINGLE LINE TVA DWG NO. 1-45W749-1 R10 FIGURE 8.3-20

Figure 8.3-20 Auxiliary Bldg Unit 1 Wiring Diagrams 480V Shutdown Bd 1A1-A

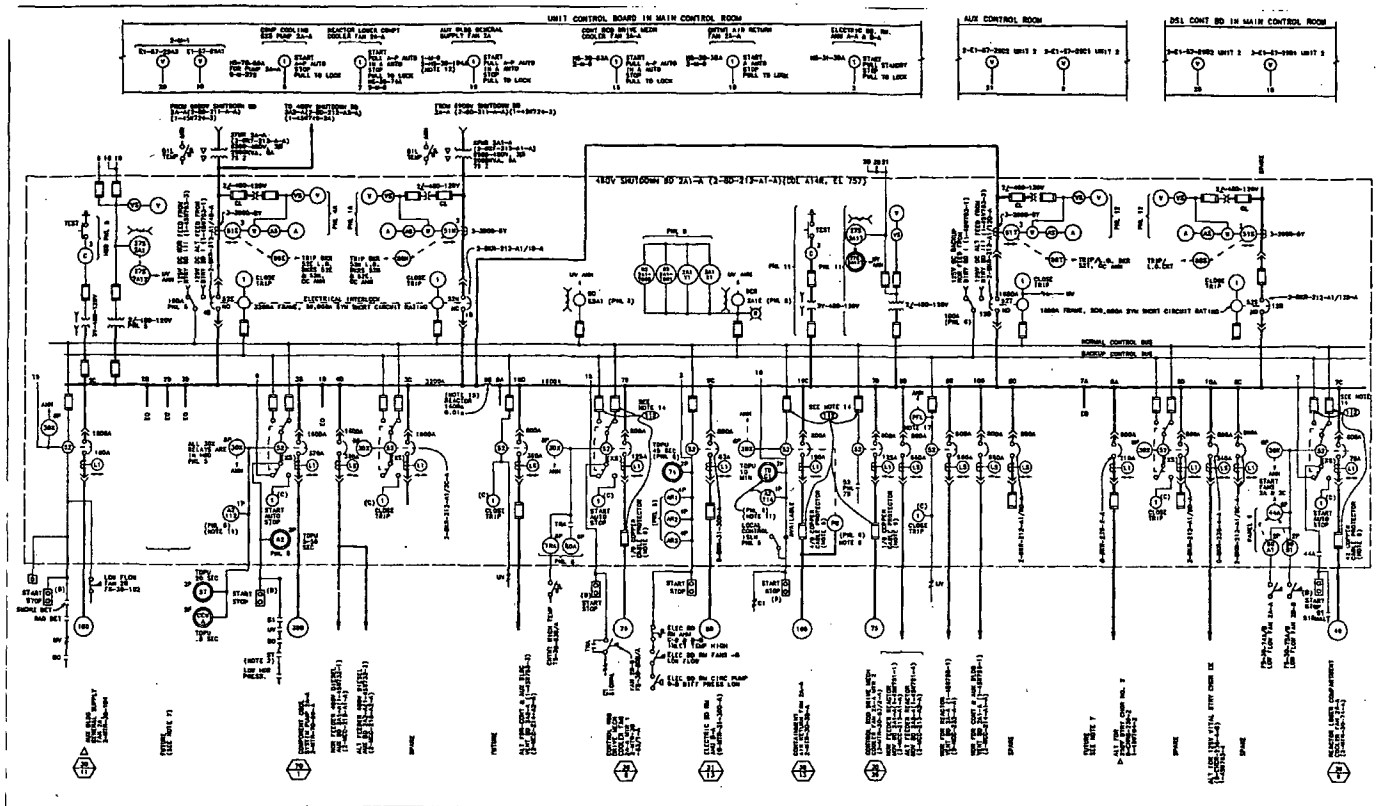

LOAD VOLTAGE & CIRCUIT BKR TYPE	TRIP DEVICE SETTING RATING (IN AMPS)	SETTINGS P.U. IN % OF MIN. RATING LONG DELAY	SHORT DELAY	INST	TIME DELAY LONG D (IN SEC)	SHORT D (IN SEC)	BKR LOCATION
50-432	100-4/FS				-	-	18,.08
50-418	100	50	-	750	4	-	2C
	200	25	-	500	2	-	2C
							2C(IP)
50-408	100	50	250	-	4	0.10	2C
	125	40	-	1250	4	-	2C
	150	33	-	1000	4	-	2C
	175	29	-	750	4	-	2C
50-408	200	25	-	750	4	-	2C
	225	22	-	750	4	-	2C
	250	20	250	-	4	0.10	2C
							2C(IP)
			-	-	-	-	2C(IP)
	300	16.6	250	-	4	0.10	2C
	350	14.3	-	500	4	-	2C
							2C(IP)
	400	12.5	250	-	4	0.10	2C
	450	11.1	250	-	4	0.10	2C
	500	10	-	1000	12	-	2C
50-408	600	8.3	250	-	4	0.10	2C
50-418	100-4/FS	-	-	-	-	-	2C
251-116	100-4/FS	-	-	-	-	-	2C
251-114	100-4/FS	-	-	-	-	-	2C

Figure 8.3-20a Auxiliary Building Unit 2 Wiring Diagrams 480V Shutdown Board 2A1-A Single Line

Amendment 89

WATTS BAR
FINAL SAFETY
ANALYSIS REPORT

AUXILIARY BUILDING
UNIT 2
WIRING DIAGRAM
480V SHUTDOWN BD 2A1-A
SINGLE LINE
TVA DWG NO. 1-45W749-1A R13
FIGURE 8.3-20 sh A

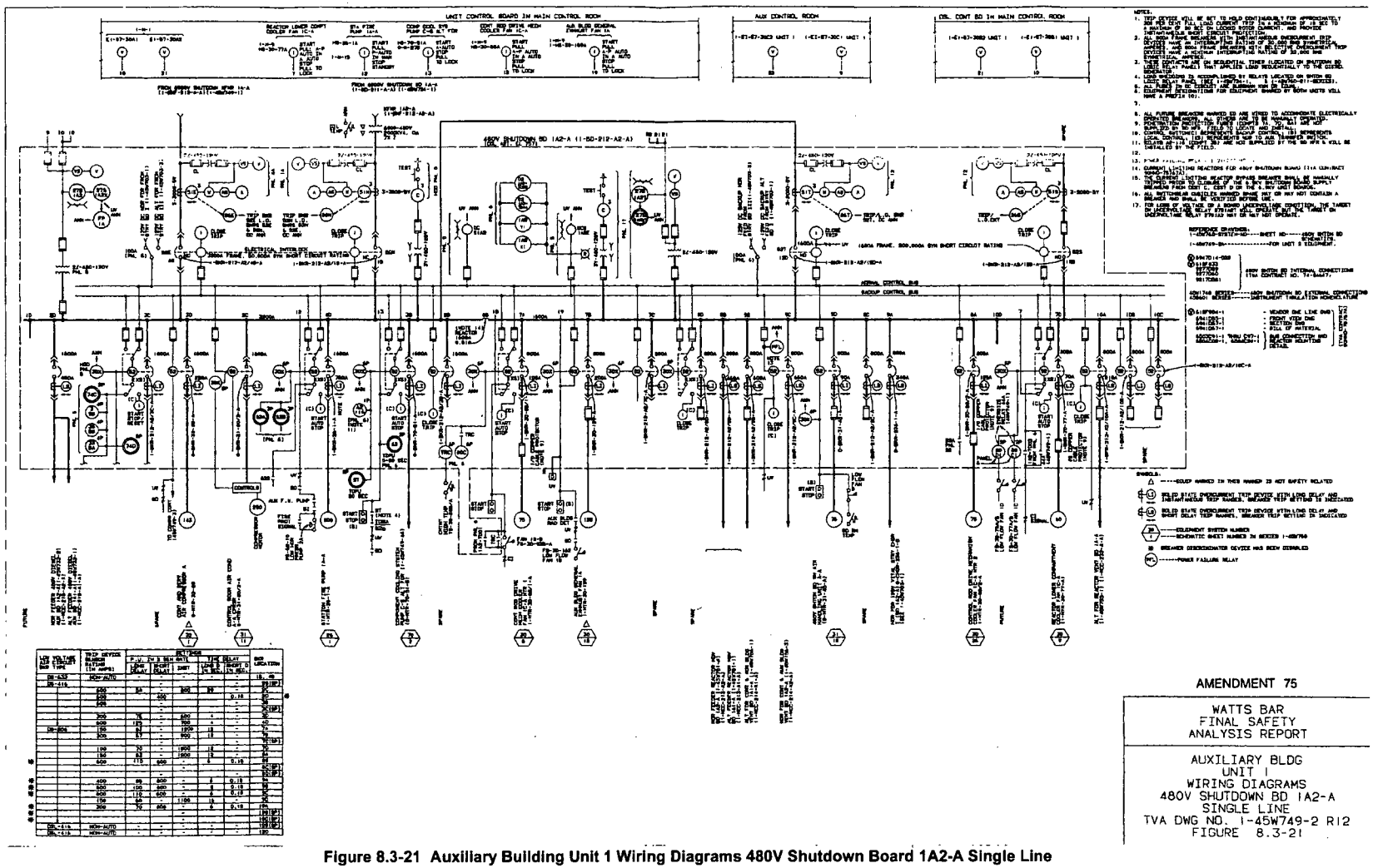

Figure 8.3-21 Auxiliary Building Unit 1 Wiring Diagrams 480V Shutdown Board 1A2-A Single Line

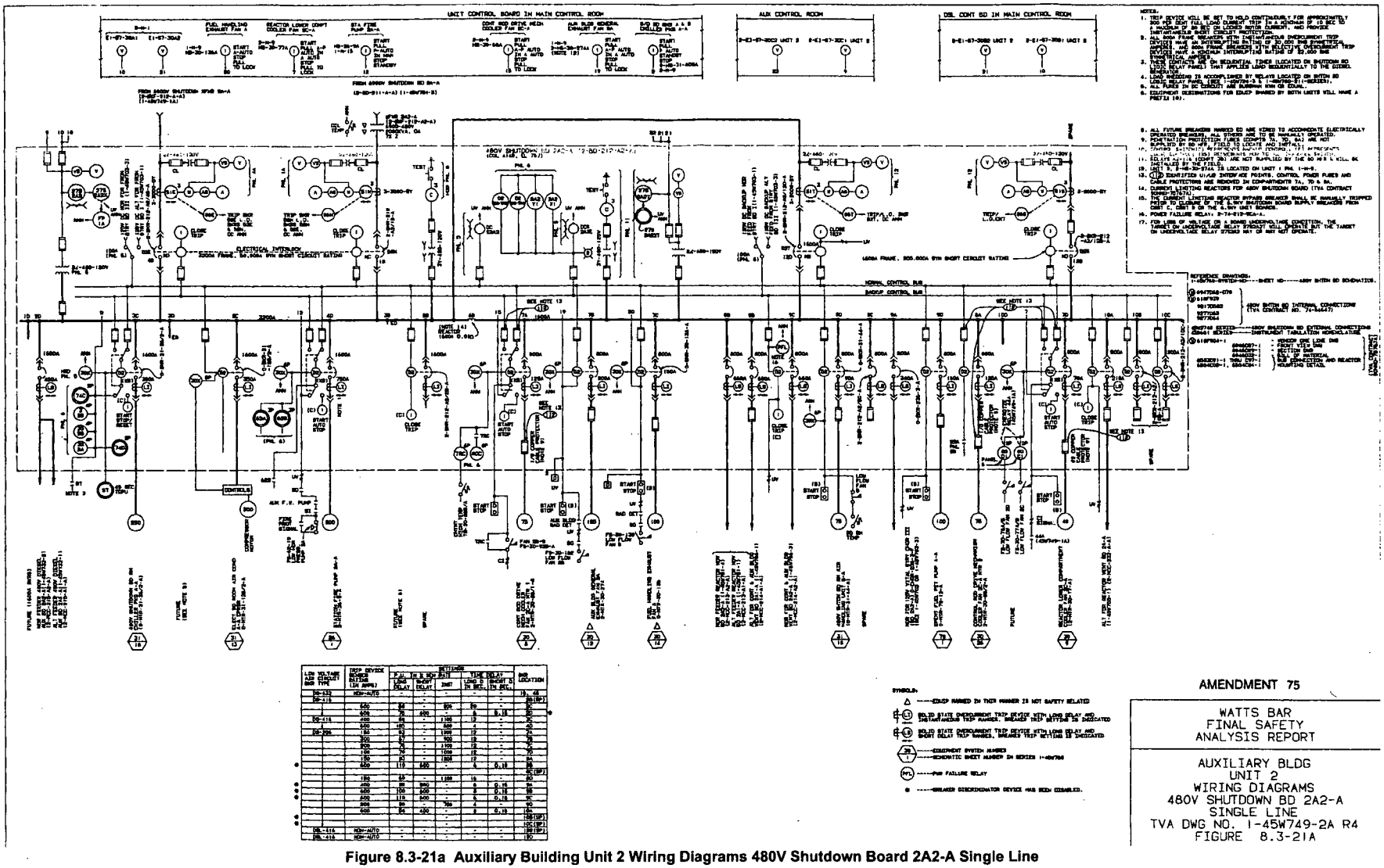

Figure 8.3-21a Auxiliary Building Unit 2 Wiring Diagrams 480V Shutdown Board 2A2-A Single Line

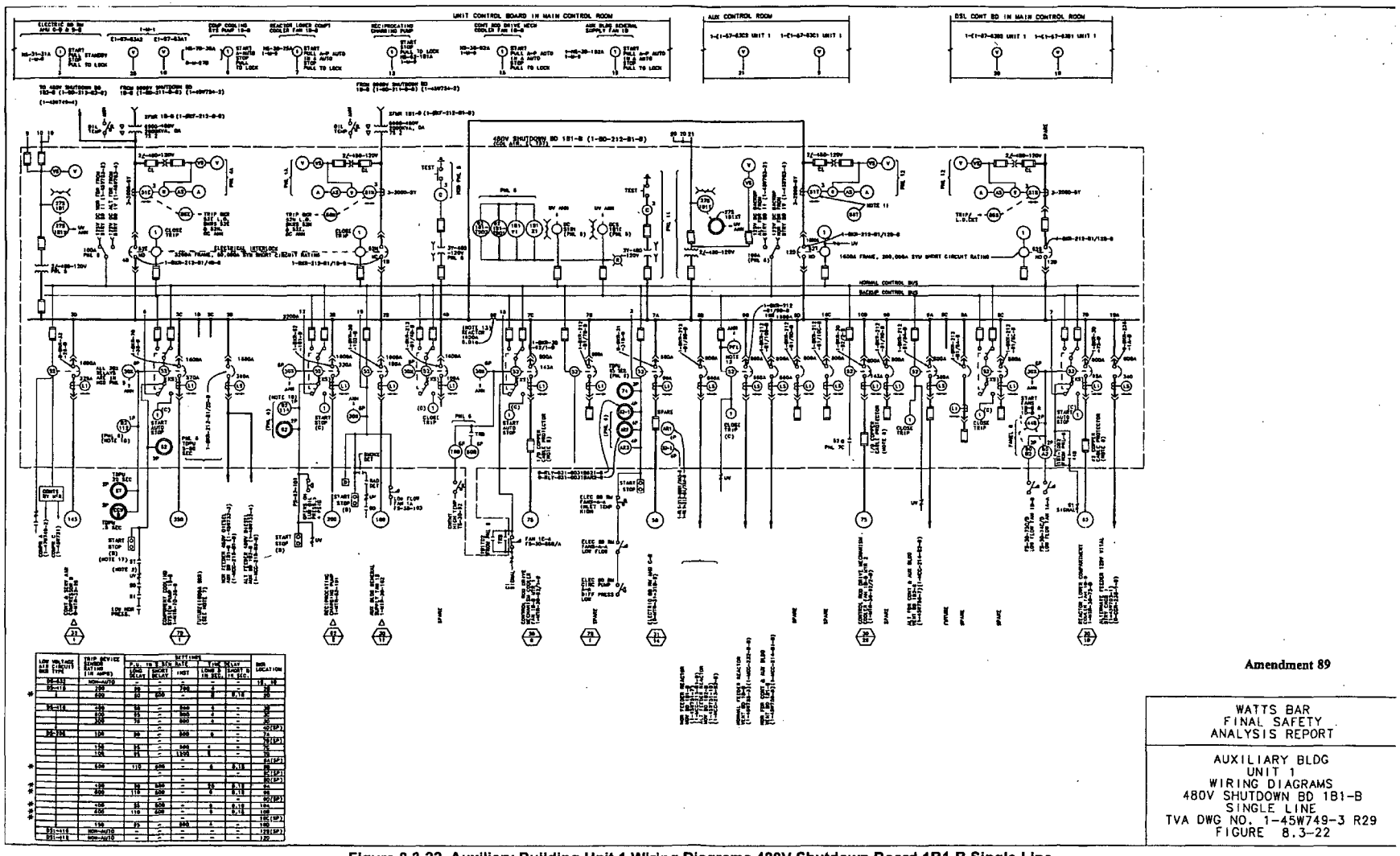

Figure 8.3-22 Auxiliary Building Unit 1 Wiring Diagrams 480V Shutdown Board 1B1-B Single Line

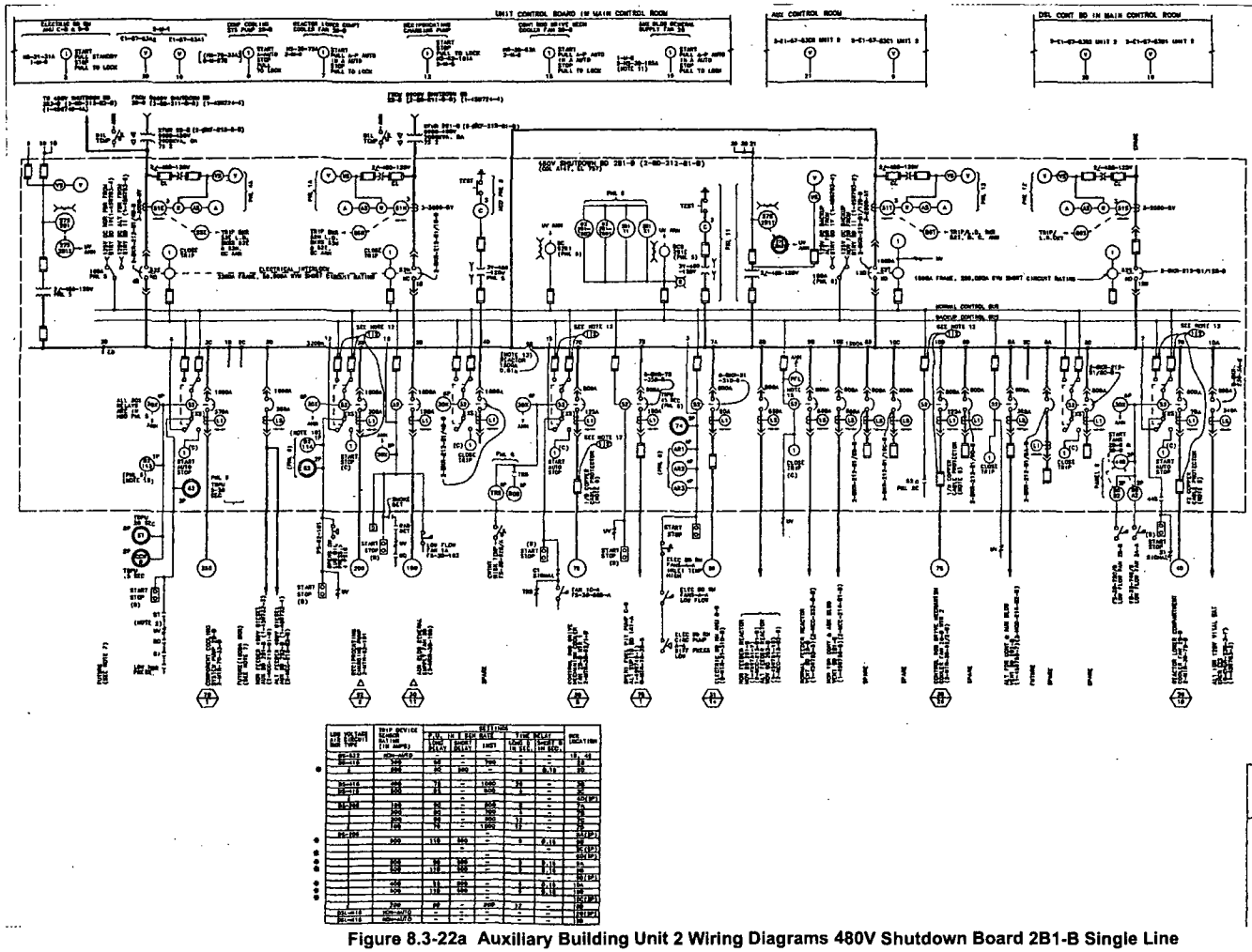

Amendment 89

WATTS BAR
FINAL SAFETY
ANALYSIS REPORT

AUXILIARY BUILDING
UNIT 2
WIRING DIAGRAM
480V SHUTDOWN BD 2B1-B
SINGLE LINE
TVA DWG NO. 1-45W749-3A R14
FIGURE 8.3-22 sh A

Figure 8.3-22a Auxiliary Building Unit 2 Wiring Diagrams 480V Shutdown Board 2B1-B Single Line

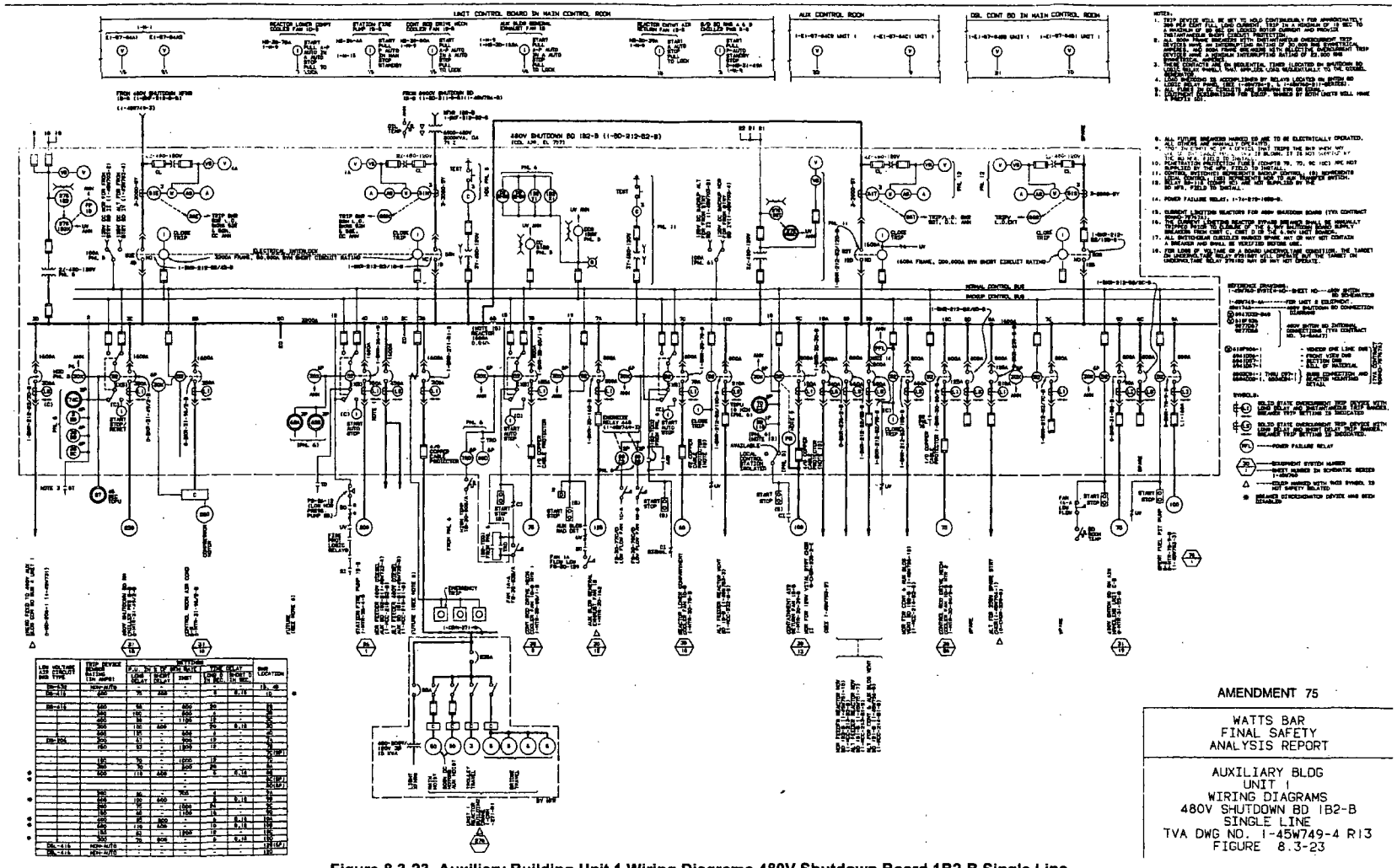

Figure 8.3-23 Auxiliary Building Unit 1 Wiring Diagrams 480V Shutdown Board 1B2-B Single Line

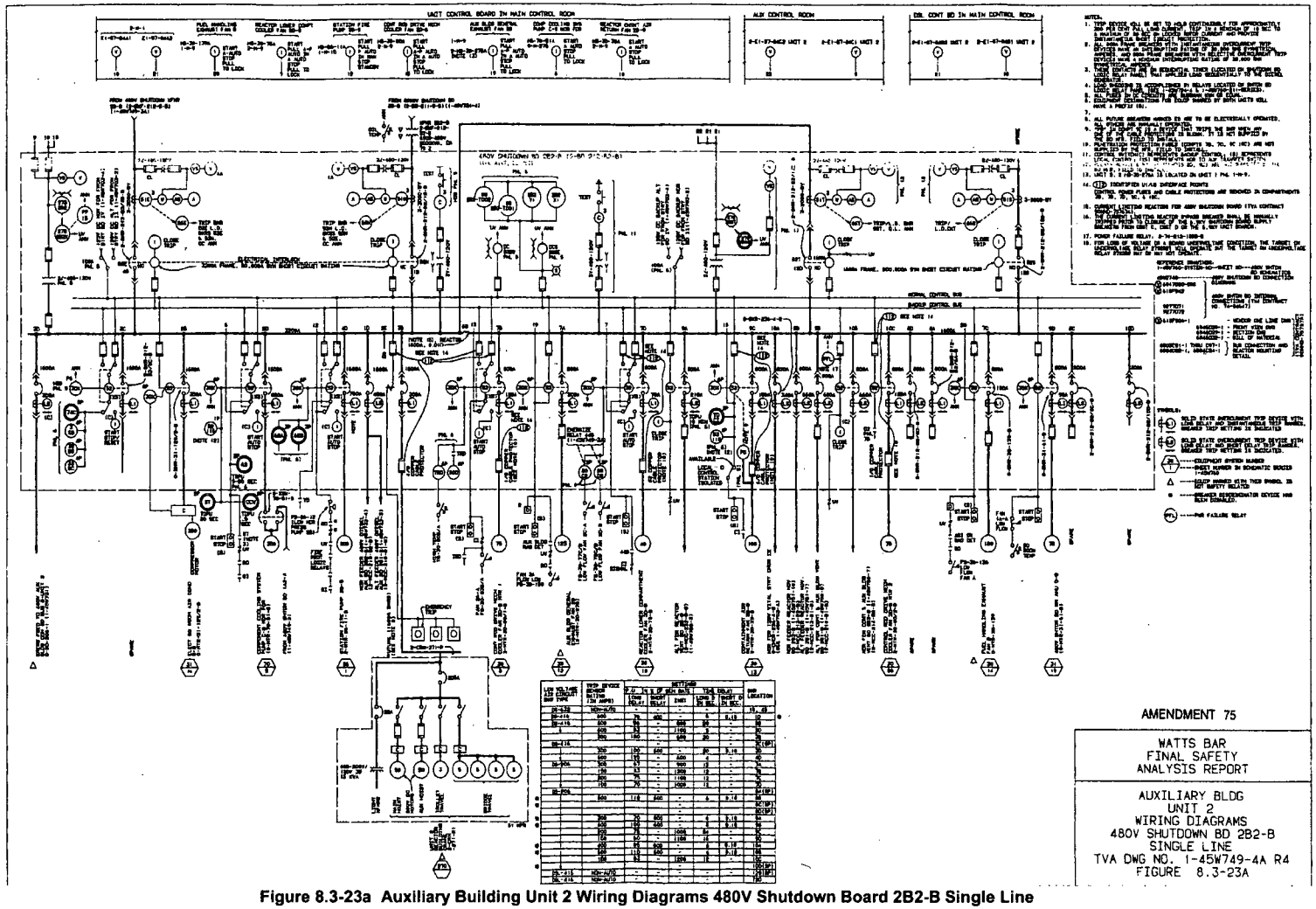

Figure 8.3-23a Auxiliary Building Unit 2 Wiring Diagrams 480V Shutdown Board 2B2-B Single Line

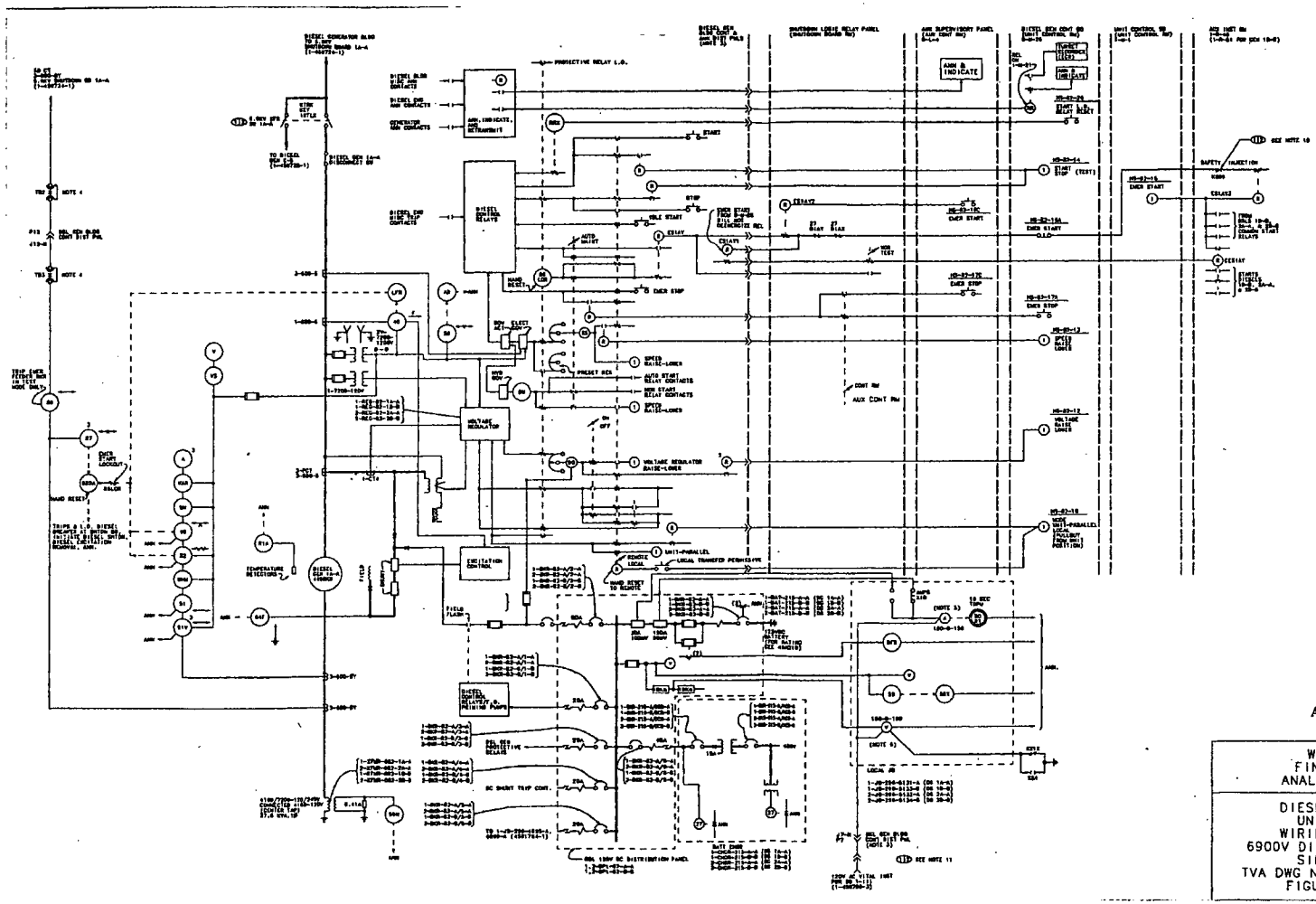

Amendment 89

WATTS BAR
FINAL SAFETY
ANALYSIS REPORT

DIESEL GEN BLDG
UNITS 1 & 2
WIRING DIAGRAMS
6900V DIESEL GENERATORS
SINGLE LINE
TVA DWG NO. 1-45W727 R13
FIGURE 8.3-24

Figure 8.3-24 Diesel Generator Building Unit 1 Wiring Diagrams 6900V Diesel Generator Single Line

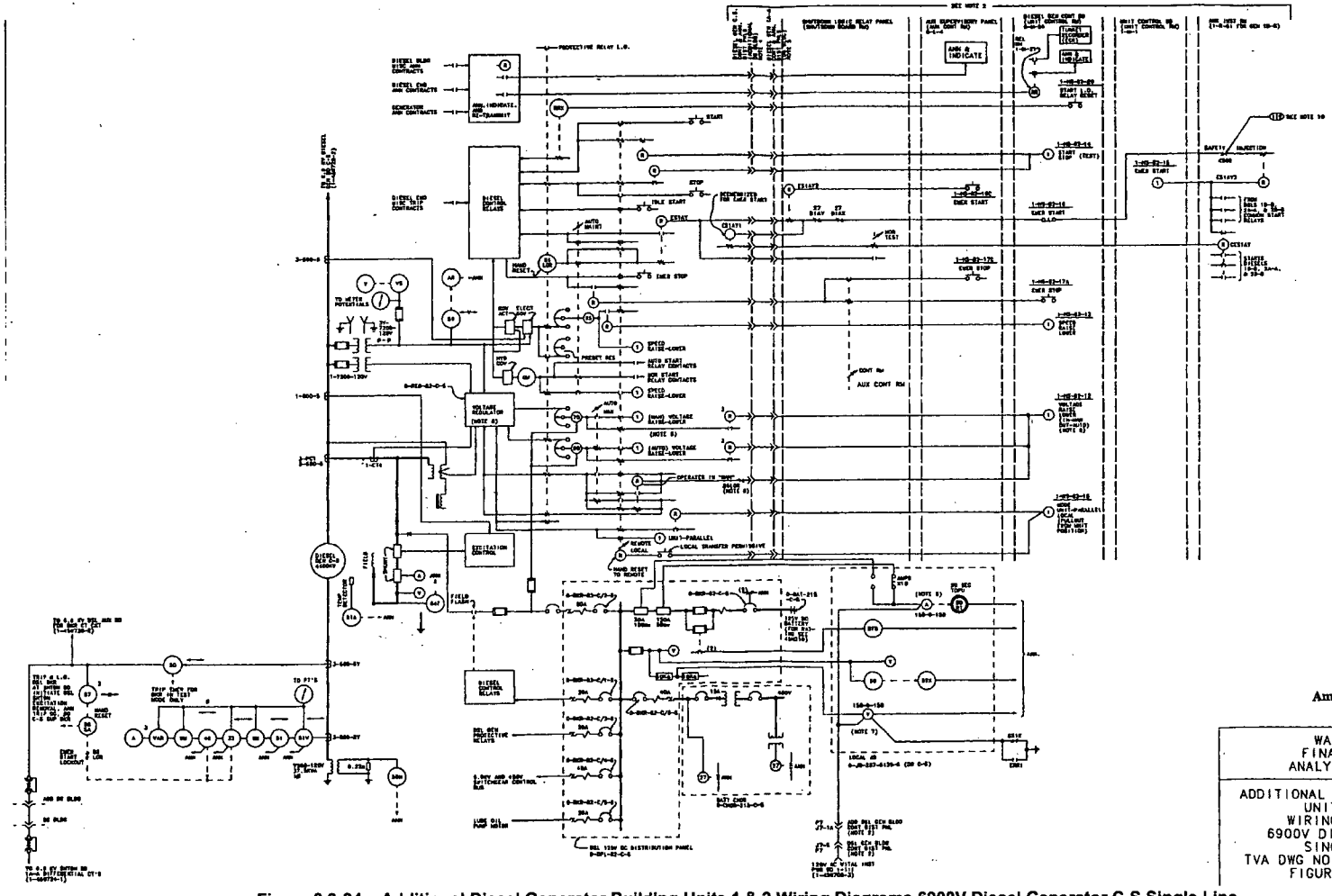

Amendment 89

WATTS BAR
FINAL SAFETY
ANALYSIS REPORT

ADDITIONAL DIESEL GEN BLDG
UNITS 1 & 2
WIRING DIAGRAMS
6900V DIESEL GEN C-S
SINGLE LINE
TVA DWG NO. 1-45W728-1 R9
FIGURE 8.3-24A

Figure 8.3-24a Additional Diesel Generator Building Units 1 & 2 Wiring Diagrams 6900V Diesel Generator C-S Single Line

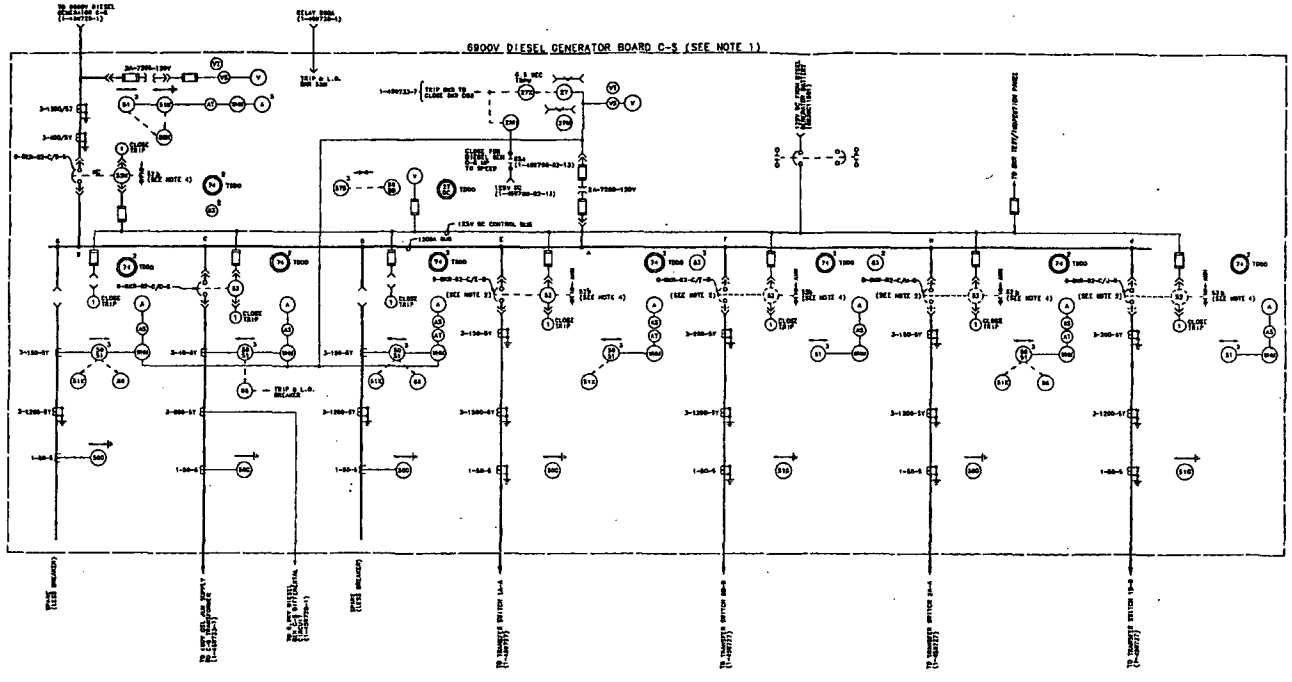

Amendment 89

WATTS BAR FINAL SAFETY ANALYSIS REPORT
POWERHOUSE UNITS 1 & 2 WIRING DIAGRAMS 6900V DSL GEN BD C-S SINGLE LINE DIAGRAMS TVA DWG NO. 1-45W728-2 R3 FIGURE 8.3-24B

Figure 8.3-24b Powerhouse Units 1 & 2 Wiring Diagrams 6900V DSL Gen BD C-S Single Line Diagrams

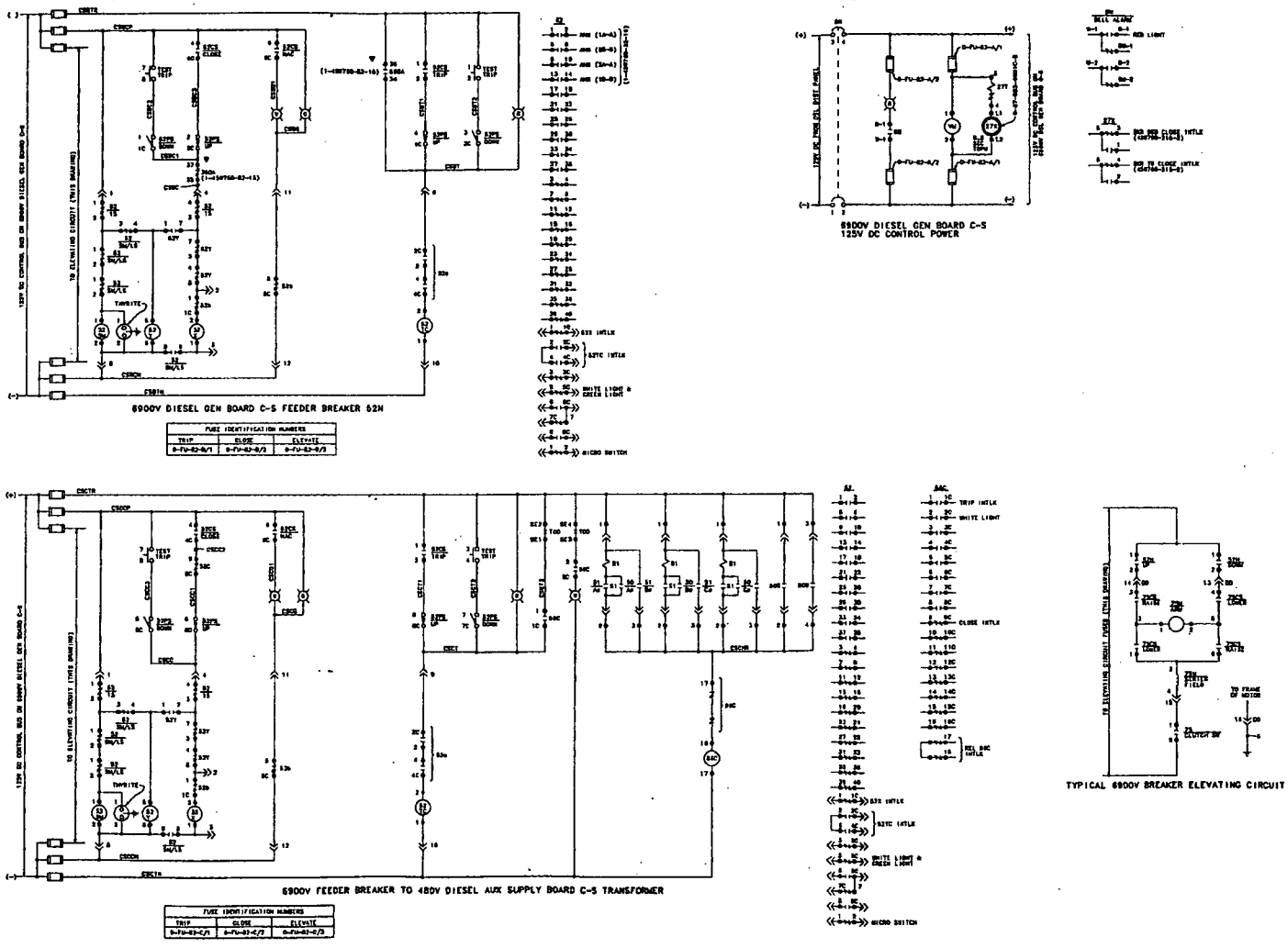

Figure 8.3-24c Additional Diesel Gen Bldg Units 1 & 2 Wiring Diagrams 6900V DSL Gen BD C-S Schematic Diagram

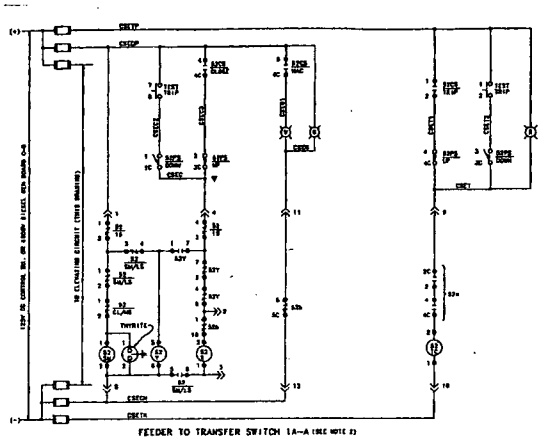

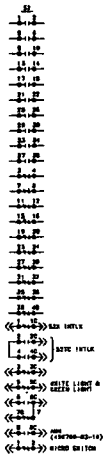

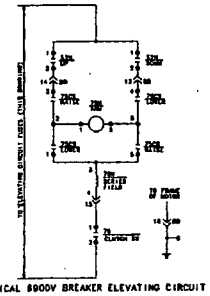

NOMENCLATURE	PANEL	WIRE PREFIX	FUSE IDENTIFICATION NUMBERS		
			TRIP	CLOSE	ELEVATE
FOR TO 1FB SH 1A-A *	C	CSZ	0-FU-03-E/1	0-FU-03-E/2	0-FU-03-E/3
FOR TO 1FB SH 1B-B *	J	CSJ	0-FU-03-J/1	0-FU-03-J/2	0-FU-03-J/3
FOR TO 2FB SH 2A-A *	H	CSH	0-FU-03-H/1	0-FU-03-H/2	0-FU-03-H/3
FOR TO 2FB SH 2B-B *	F	CSF	0-FU-03-F/1	0-FU-03-F/2	0-FU-03-F/3

* ONLY ONE BREAKER REQUIRED FOR PANELS C,H,J,H AND F

Figure 8.3-24d Additional Diesel Gen Bldg Units 1 & 2 Wiring Diagrams 6900V DSL Gen BD C-S Schmatic Diagram

Figure 8.3-25 Deleted by Amendment 88

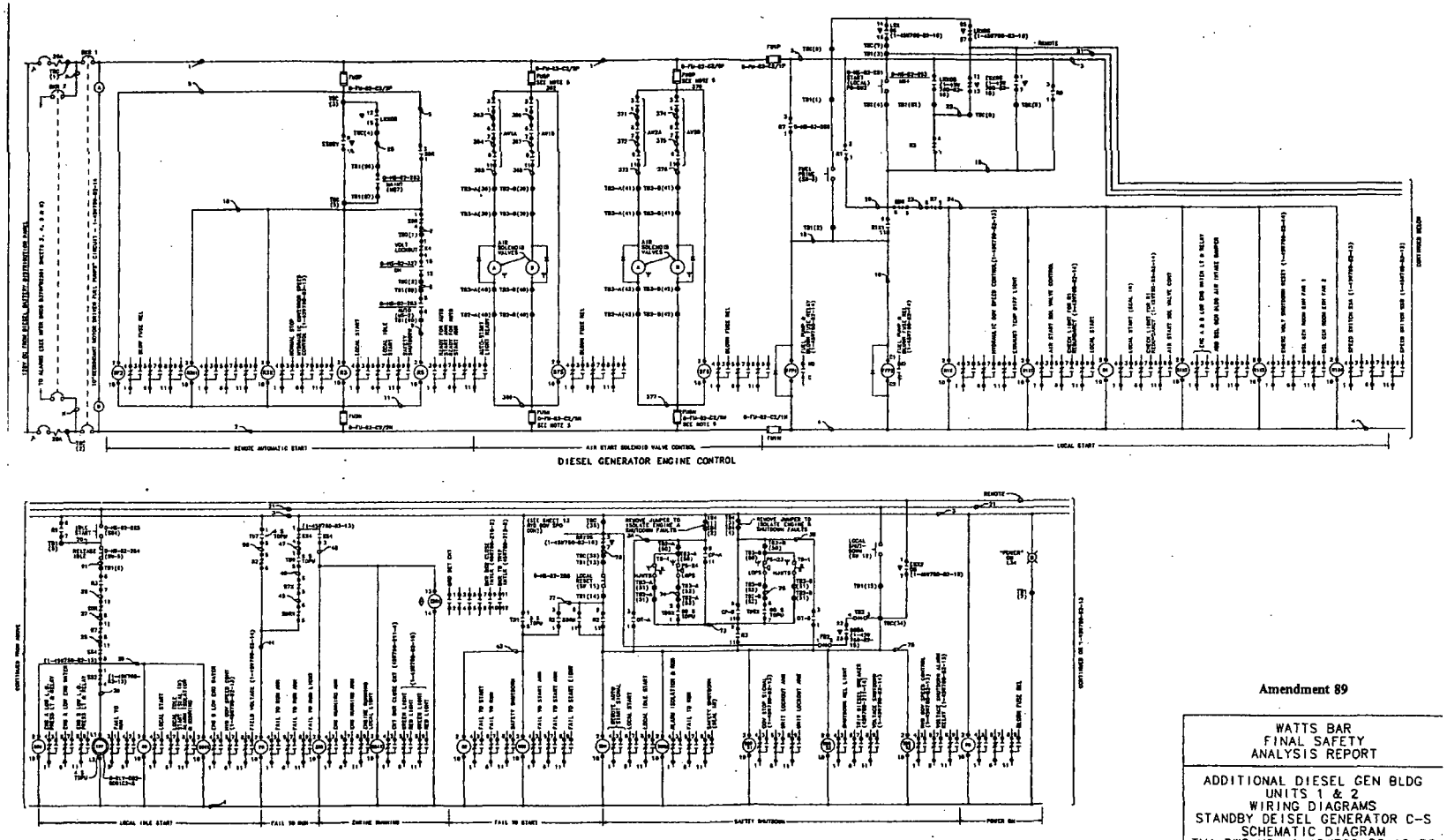

Amendment 89

WATTS BAR
FINAL SAFETY
ANALYSIS REPORT

ADDITIONAL DIESEL GEN BLDG
UNITS 1 & 2
WIRING DIAGRAMS
STANDBY DEISEL GENERATOR C-S
SCHEMATIC DIAGRAM
TVA DWG NO. 1-45W760-82-12 R6
FIGURE 8.3-25A

Figure 8.3-25a Additional Diesel Gen Bldg Units 1 & 2 Wiring Diagrams Standby DSL Gen BD C-S Schmatic Diagram

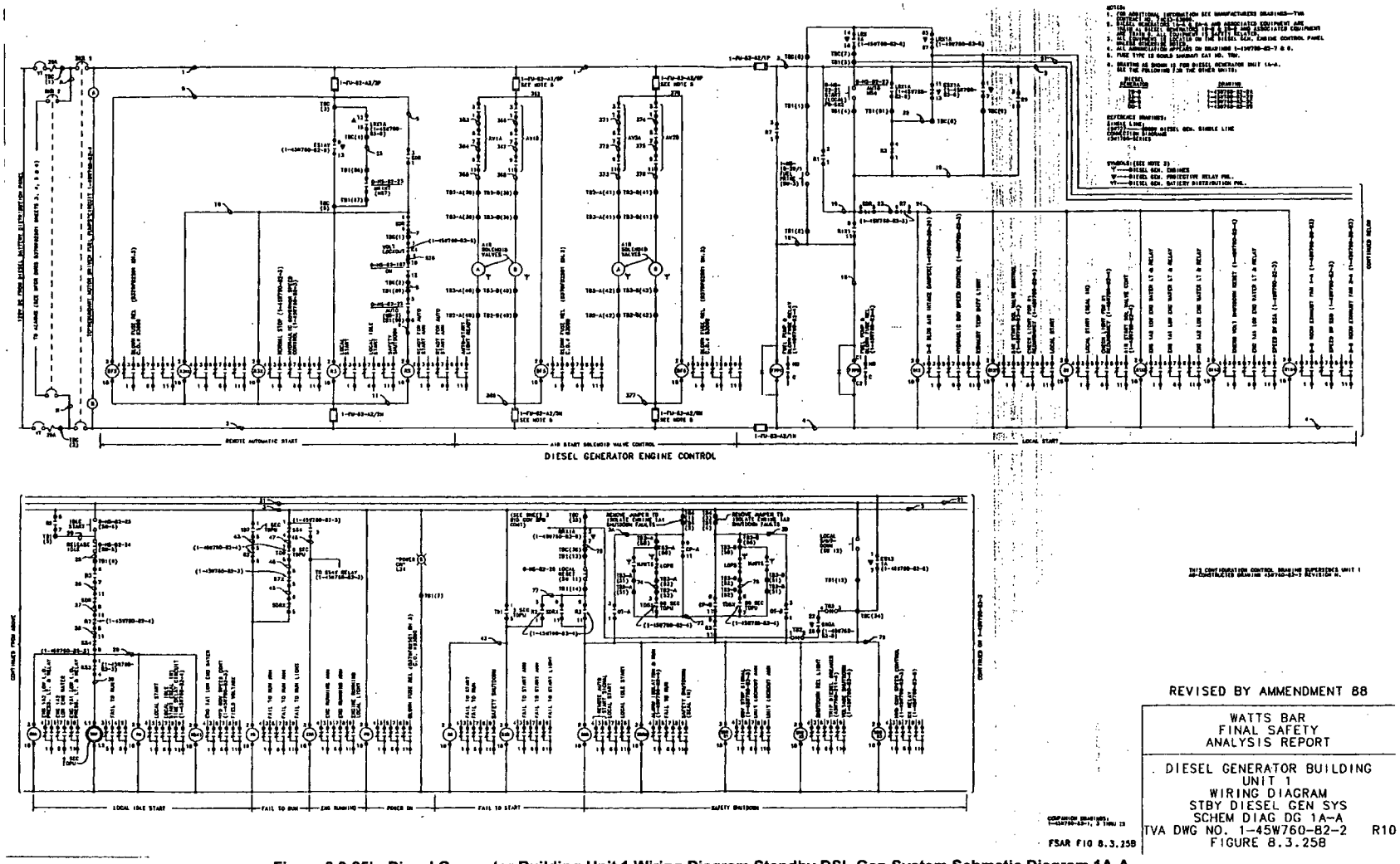

Figure 8.3-25b Diesel Generator Building Unit 1 Wiring Diagram Standby DSL Gen System Schmatic Diagram 1A-A

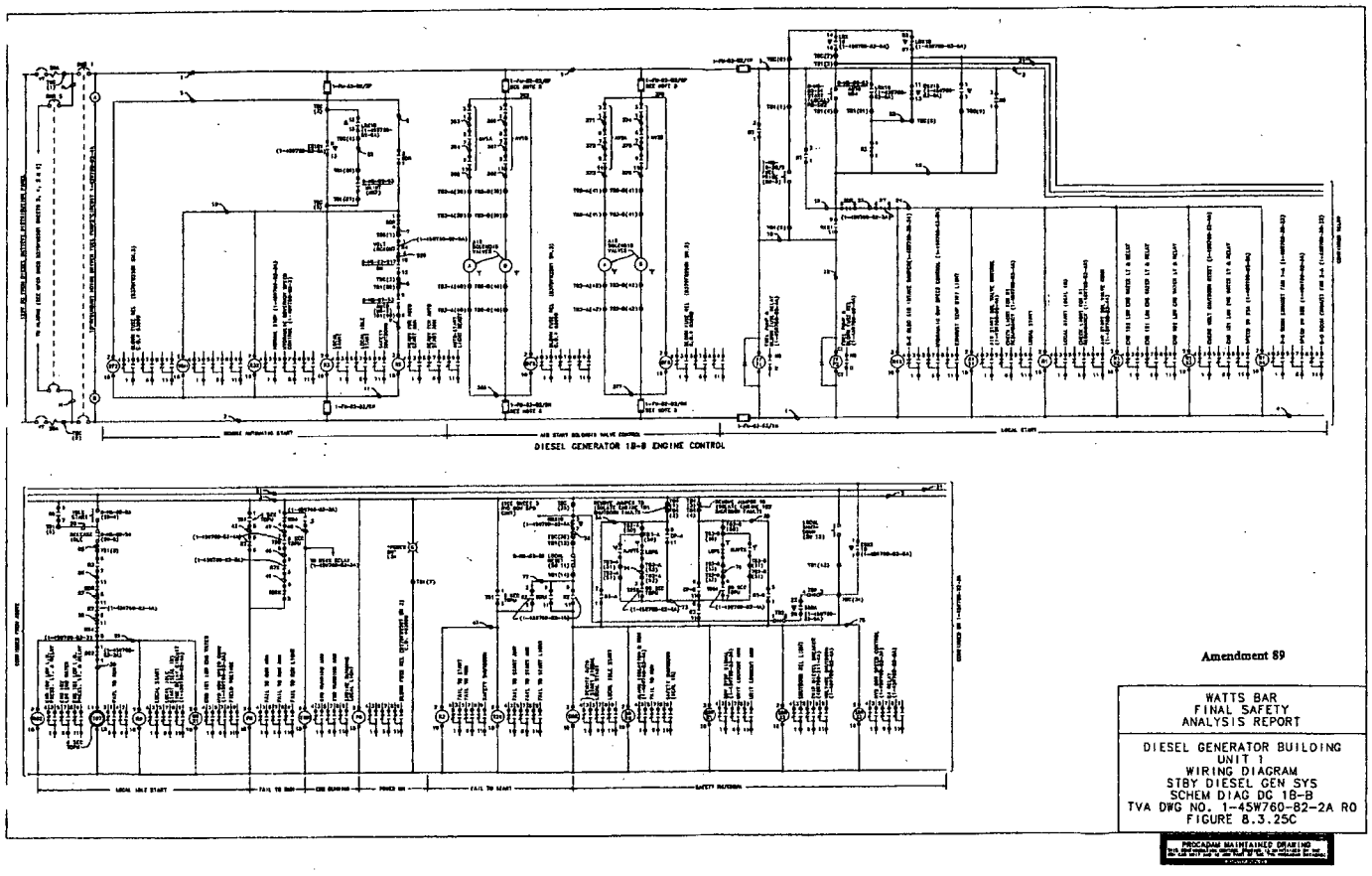

Figure 8.3-25c Diesel Generator Building Unit 1 Wiring Diagram Standby DSL Gen System Schematic Diagram 1B-B

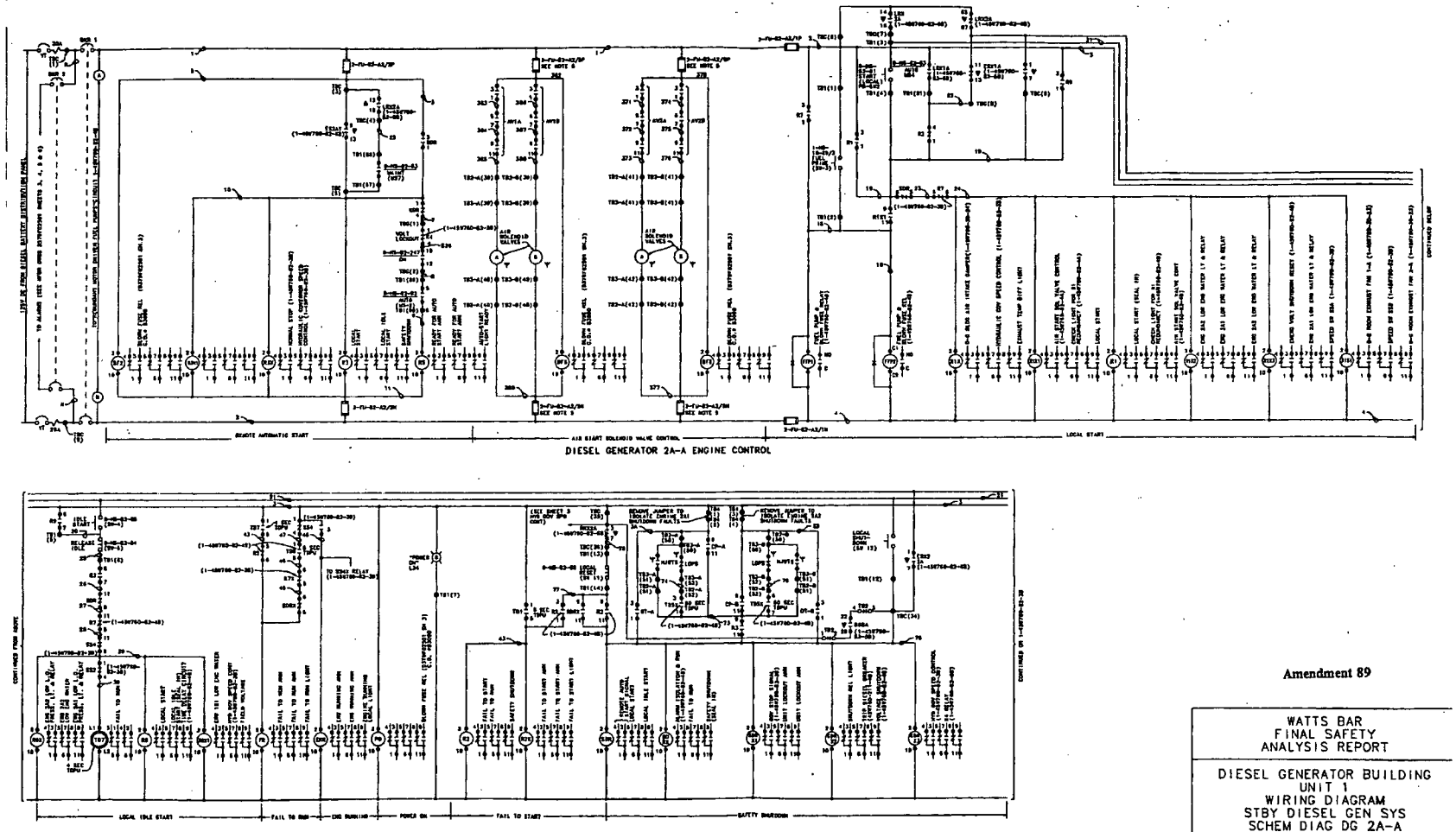

Amendment 89

WATTS BAR FINAL SAFETY ANALYSIS REPORT
DIESEL GENERATOR BUILDING UNIT 1 WIRING DIAGRAM STBY DIESEL GEN SYS SCHEM DIAG DG 2A-A TVA DWG NO. 1-45W760-82-2B R0 FIGURE 8.3.25D

Figure 8.3-25d Diesel Generator Building Unit 1 Wiring Diagrams Standby Dsl. Gen. Schematic Diagram 2A-A

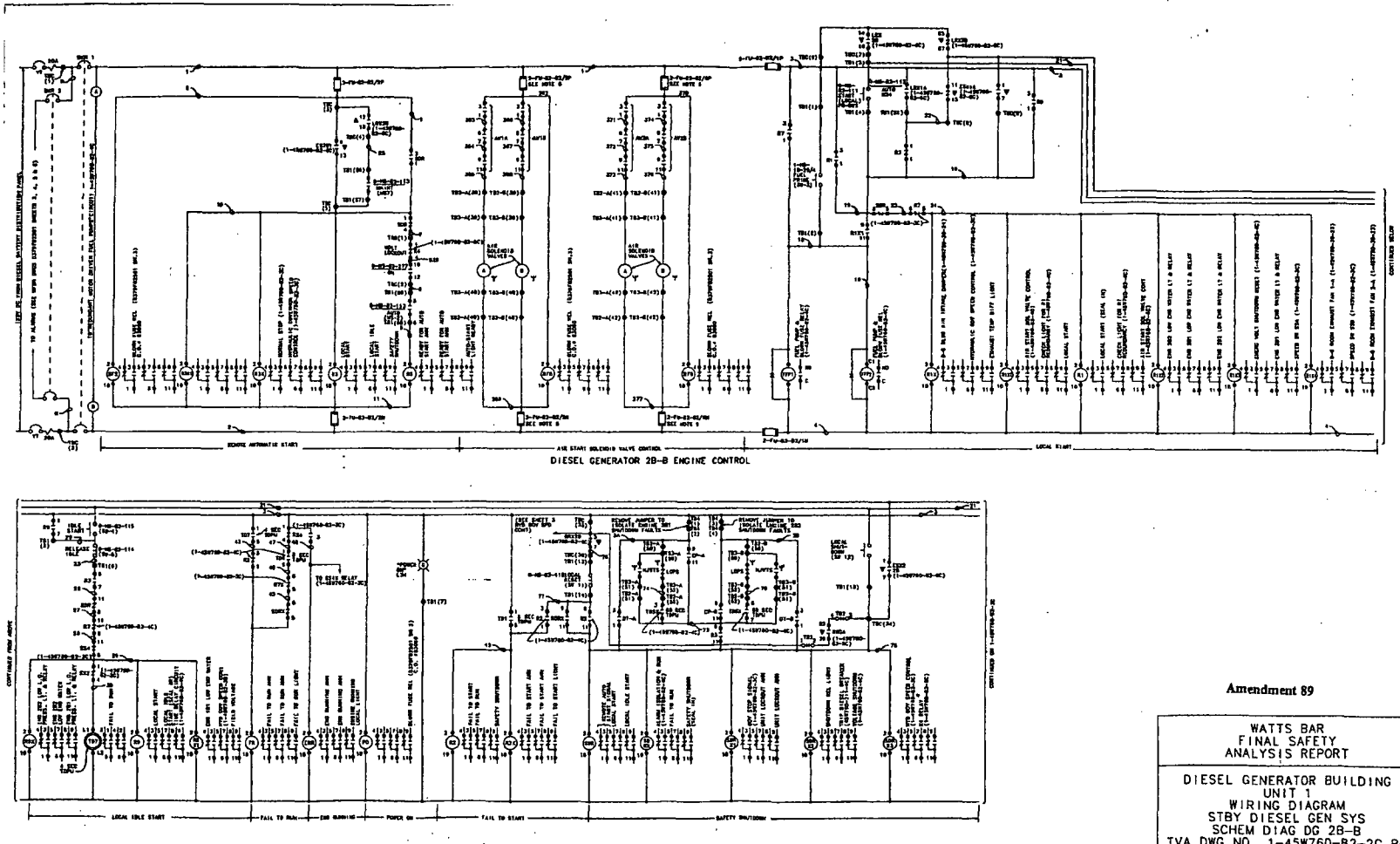

Amendment 89

WATTS BAR
FINAL SAFETY
ANALYSIS REPORT

DIESEL GENERATOR BUILDING
UNIT 1
WIRING DIAGRAM
STBY DIESEL GEN SYS
SCHEM DIAG DG 2B-B
TVA DWG NO. 1-45W760-82-2C RO
FIGURE 8.3.25E

Figure 8.3-25e Diesel Generator Building Unit 1 Wiring Diagrams Standby Dsl. Gen. Schematic Diagram 2B-B

Figure 8.3-26 Deleted by Amendment 88

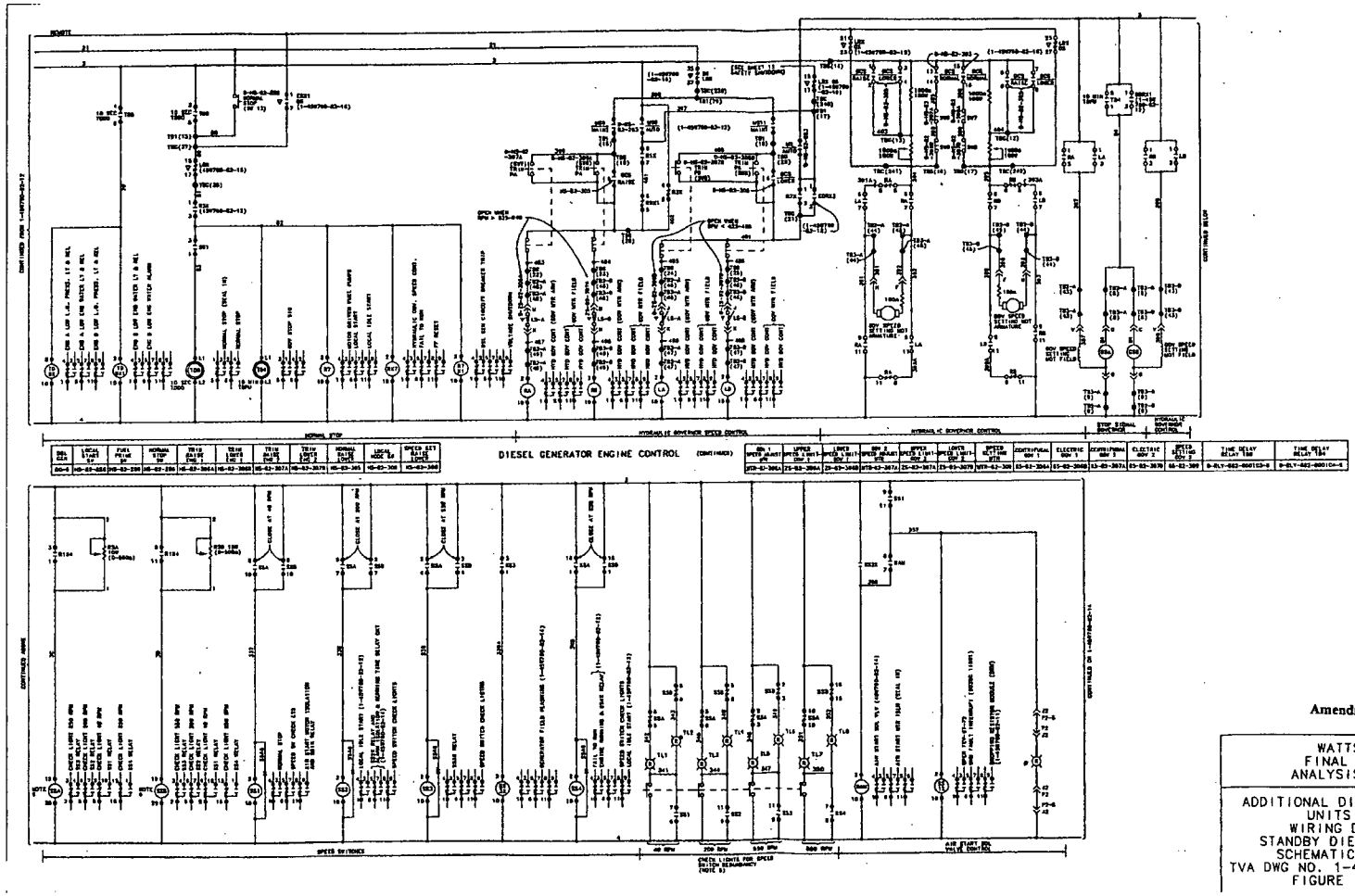

Amendment 89

WATTS BAR
FINAL SAFETY
ANALYSIS REPORT

ADDITIONAL DIESEL GEN BLDG
UNITS 1 & 2
WIRING DIAGRAMS
STANDBY DIESEL GEN C-S
SCHEMATIC DIAGRAMS
TVA DWG NO. 1-45W760-82-13 R4
FIGURE 8.3-26A

Figure 8.3-26a Additional Diesel Gen. Bldg. Units I and 2 Wiring Diagrams Standby Diesel Gen. C-S Schematic Diagrams

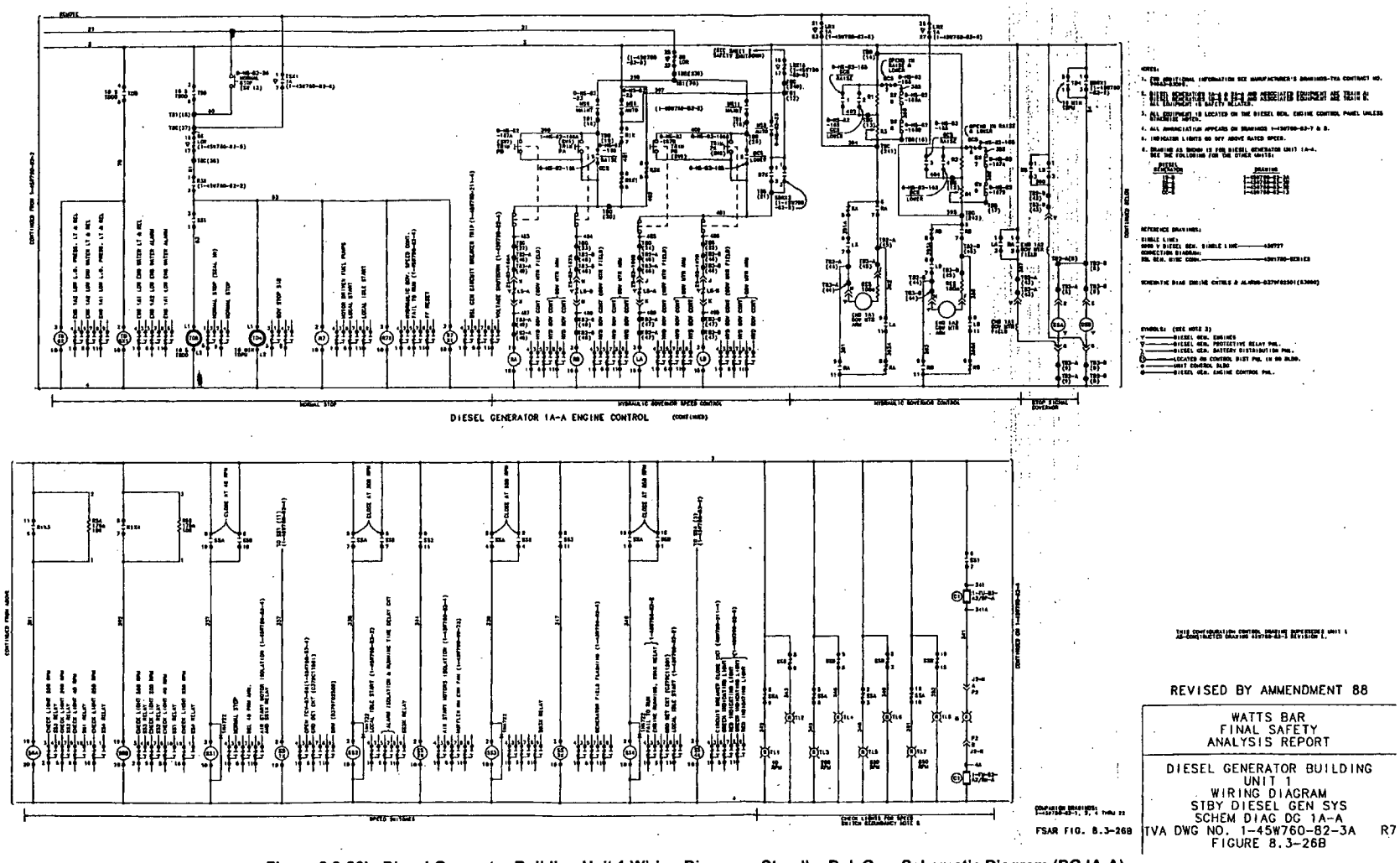

Figure 8.3-26b Diesel Generator Building Unit 1 Wiring Diagrams Standby Dsl. Gen. Schematic Diagram (DG IA-A)

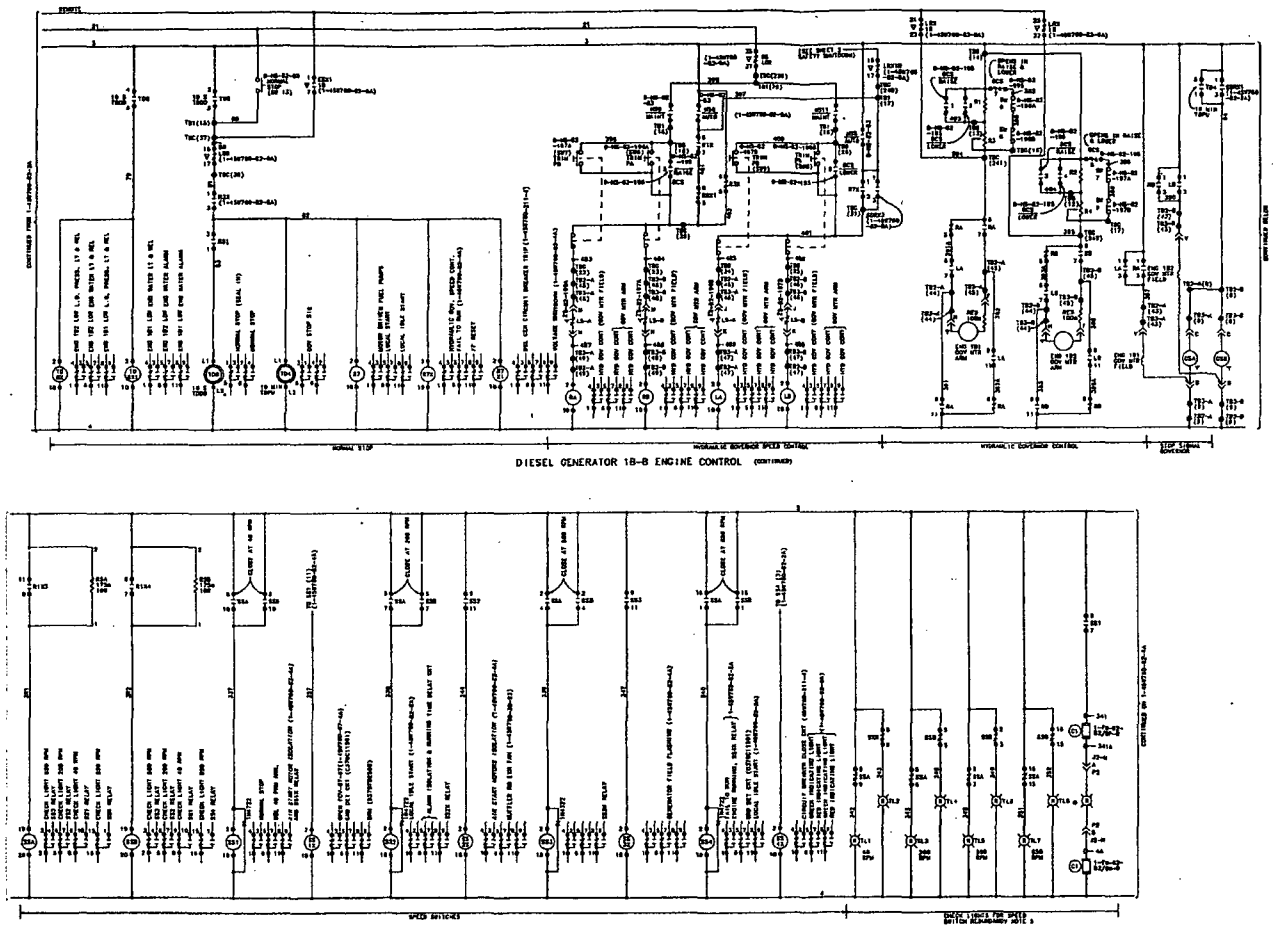

Figure 8.3-26c Diesel Generator Building Unit I Wiring Diagrams Standby Dsl. Gen. Schematic Diagram (DG IB-B)

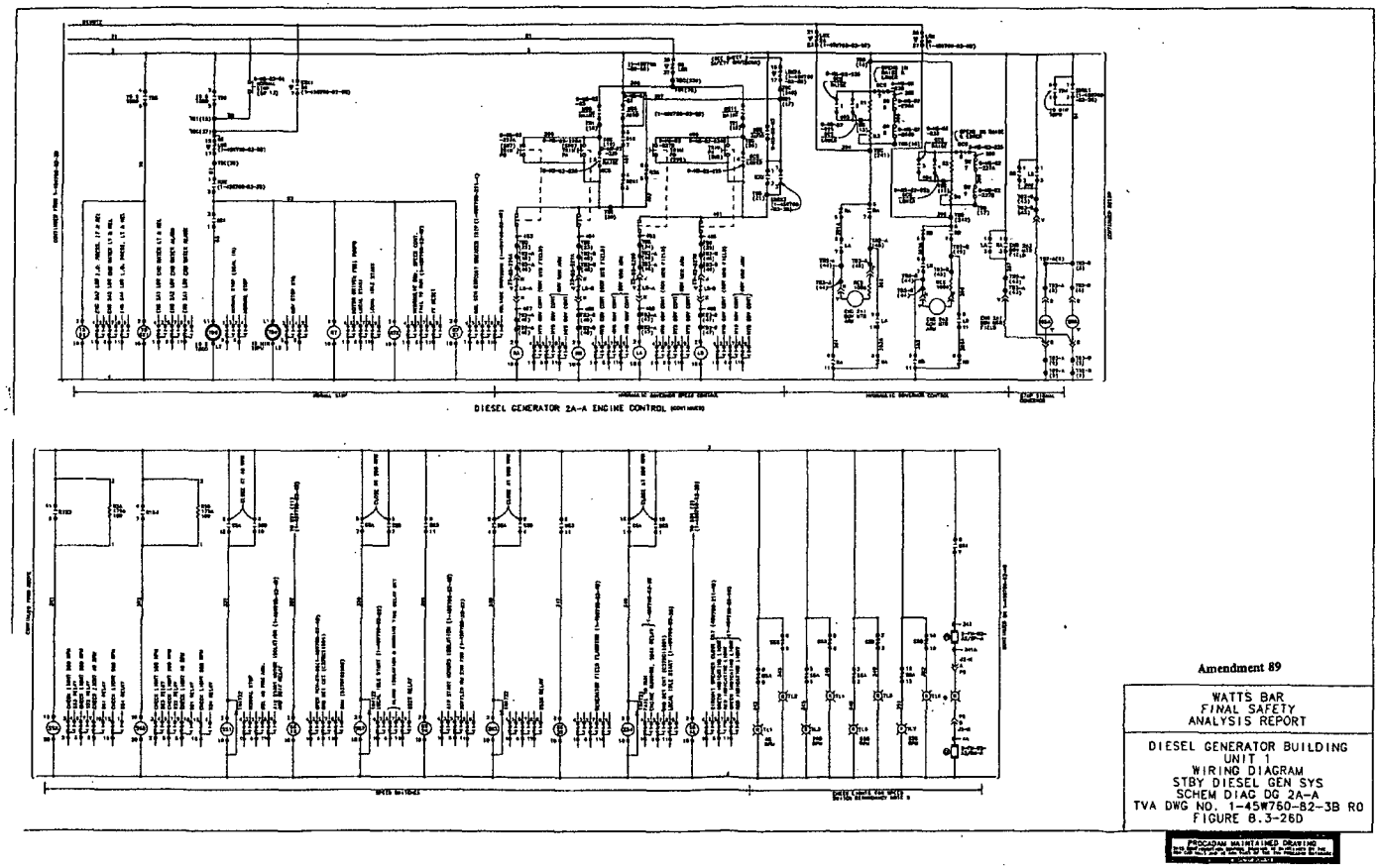

Figure 8.3-26d Diesel Generator Building Unit 1 Wiring Diagrams Standby Dsl. Gen. Schematic Diagram (DG 2A-A)

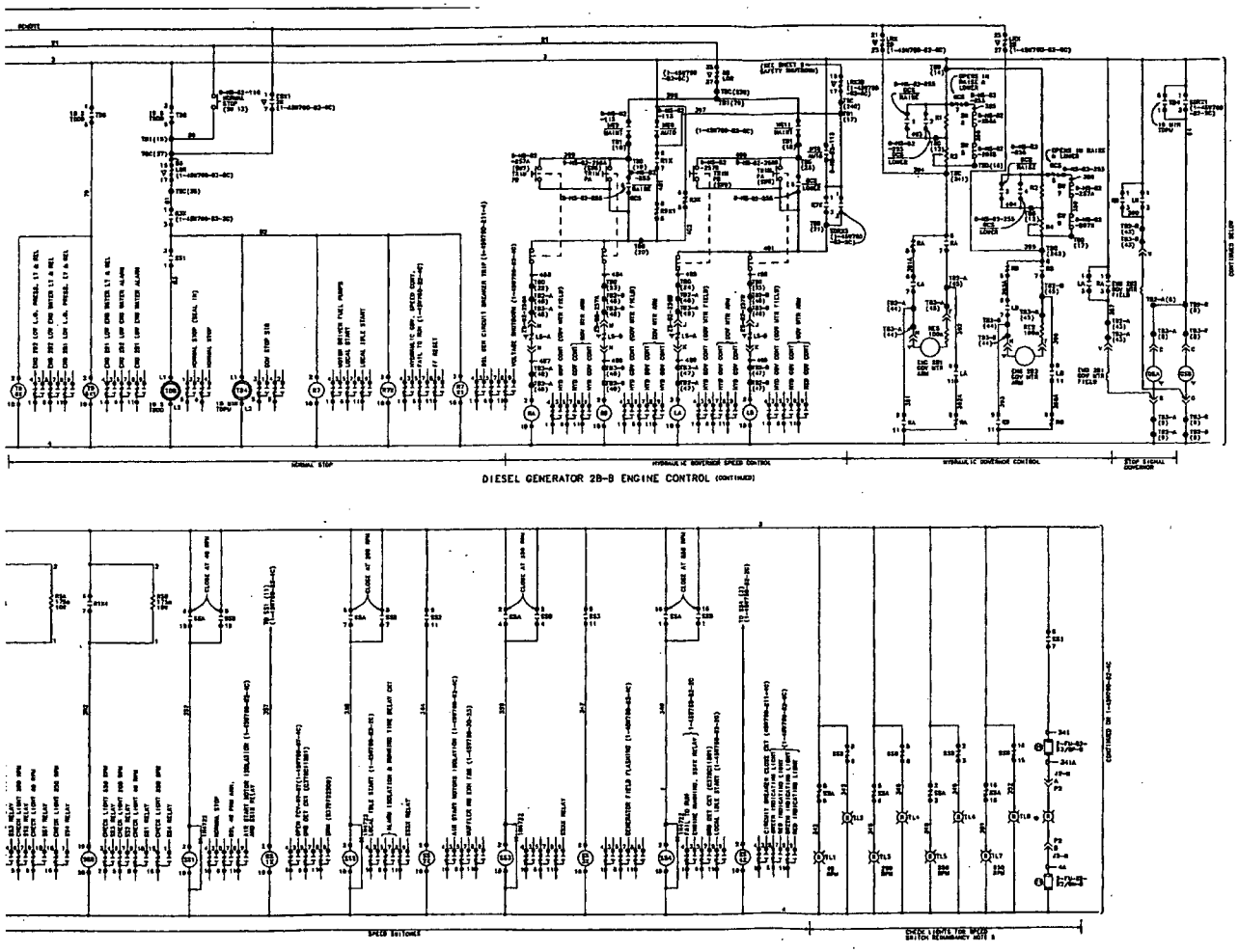

Figure 8.3-26e Diesel Generator Building Unit 2 Wiring Diagrams 6900V Standby Dsl. Gen. Schematic Diagram (DG 2B-B)

Figure 8.3-27 Deleted by Amendment 88

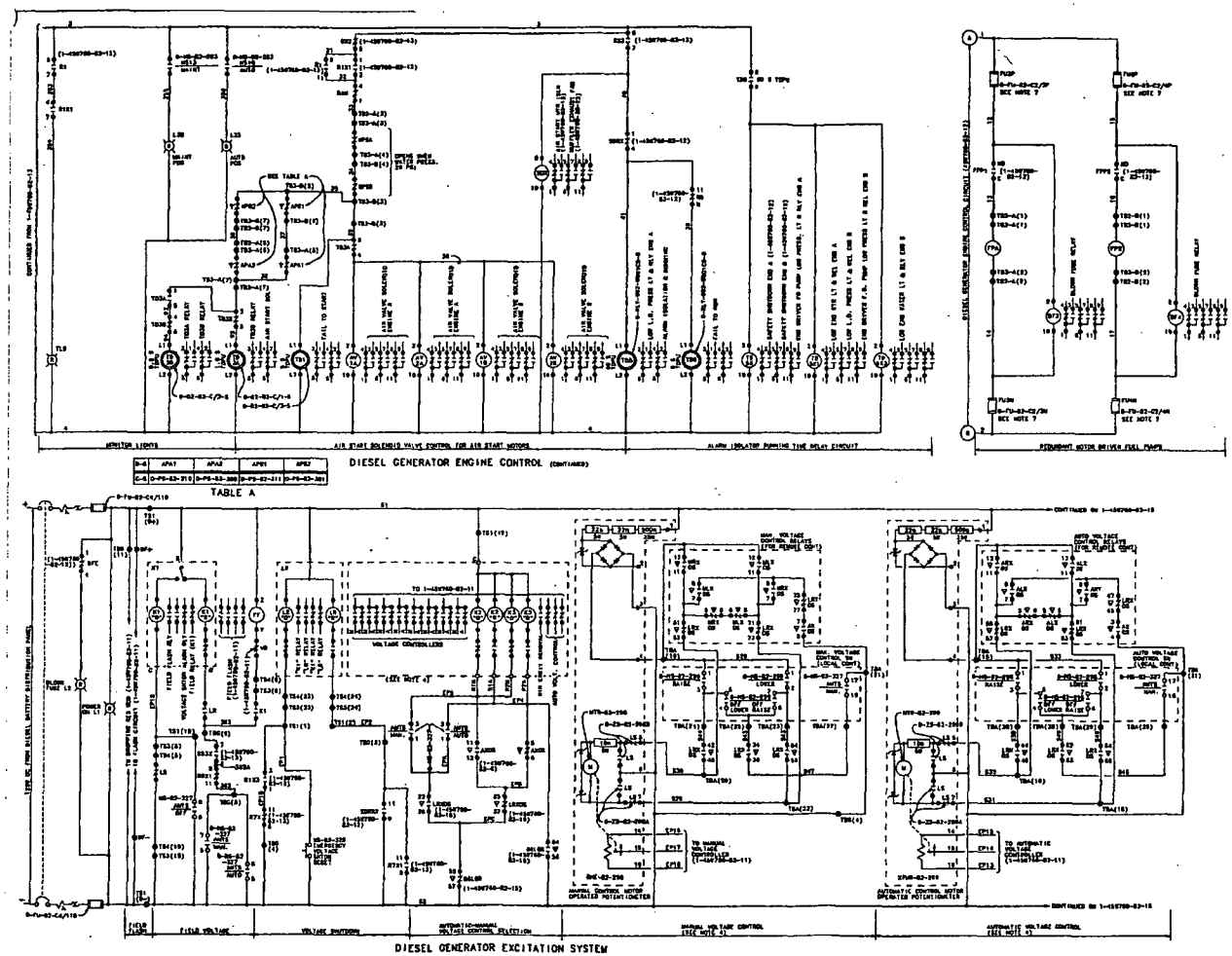

Figure 8.3-27a Additional Diesel Gen. Bldg. Units 1 and 2 Wiring Diagrams Standby Diesel Gen. C-S Schematic Diagrams

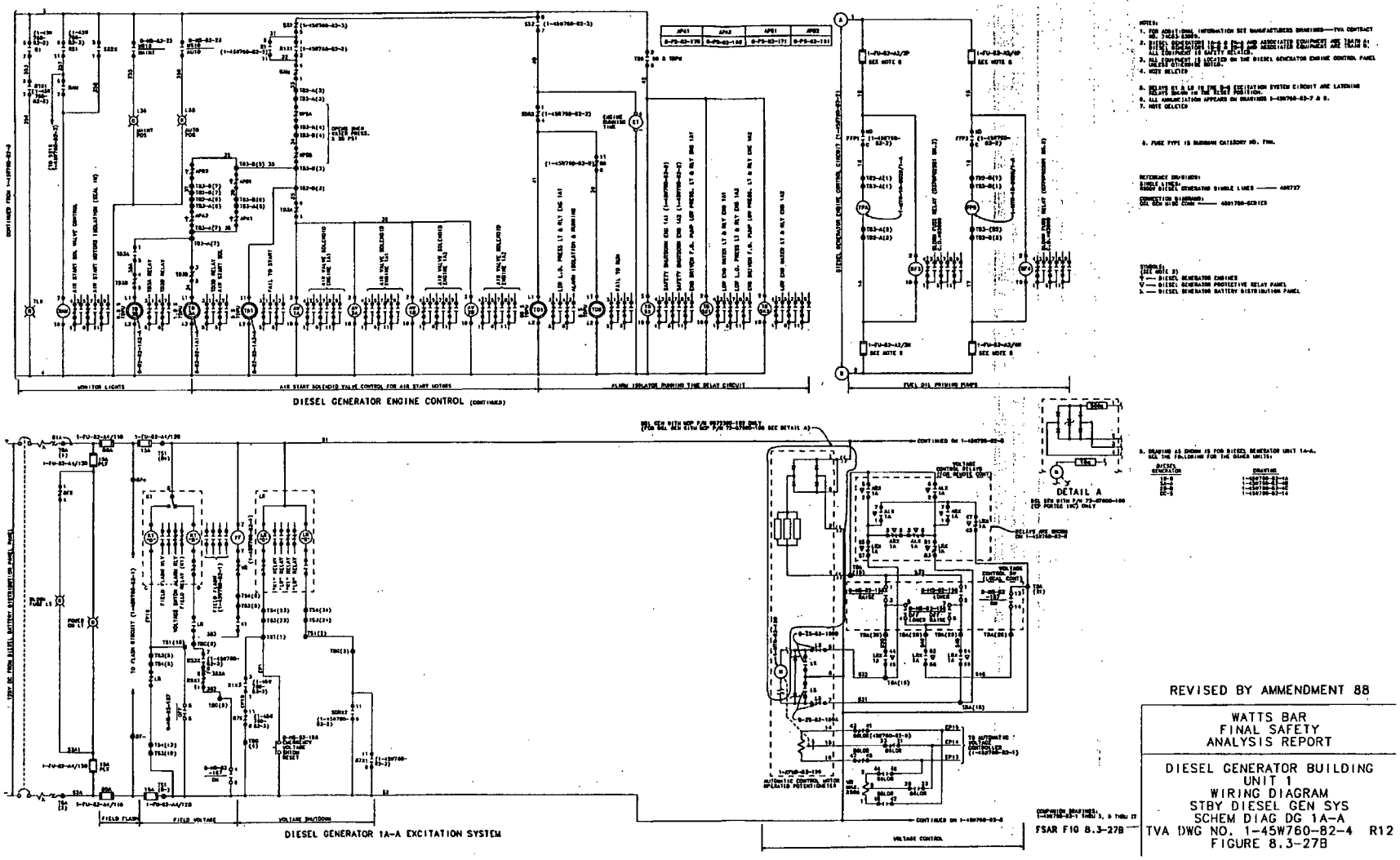

Figure 8.3-27b Diesel Generator Building Unit 1 Wiring Diagrams Standby Dsl. Gen. Schematic Diagram (DG IA-A)

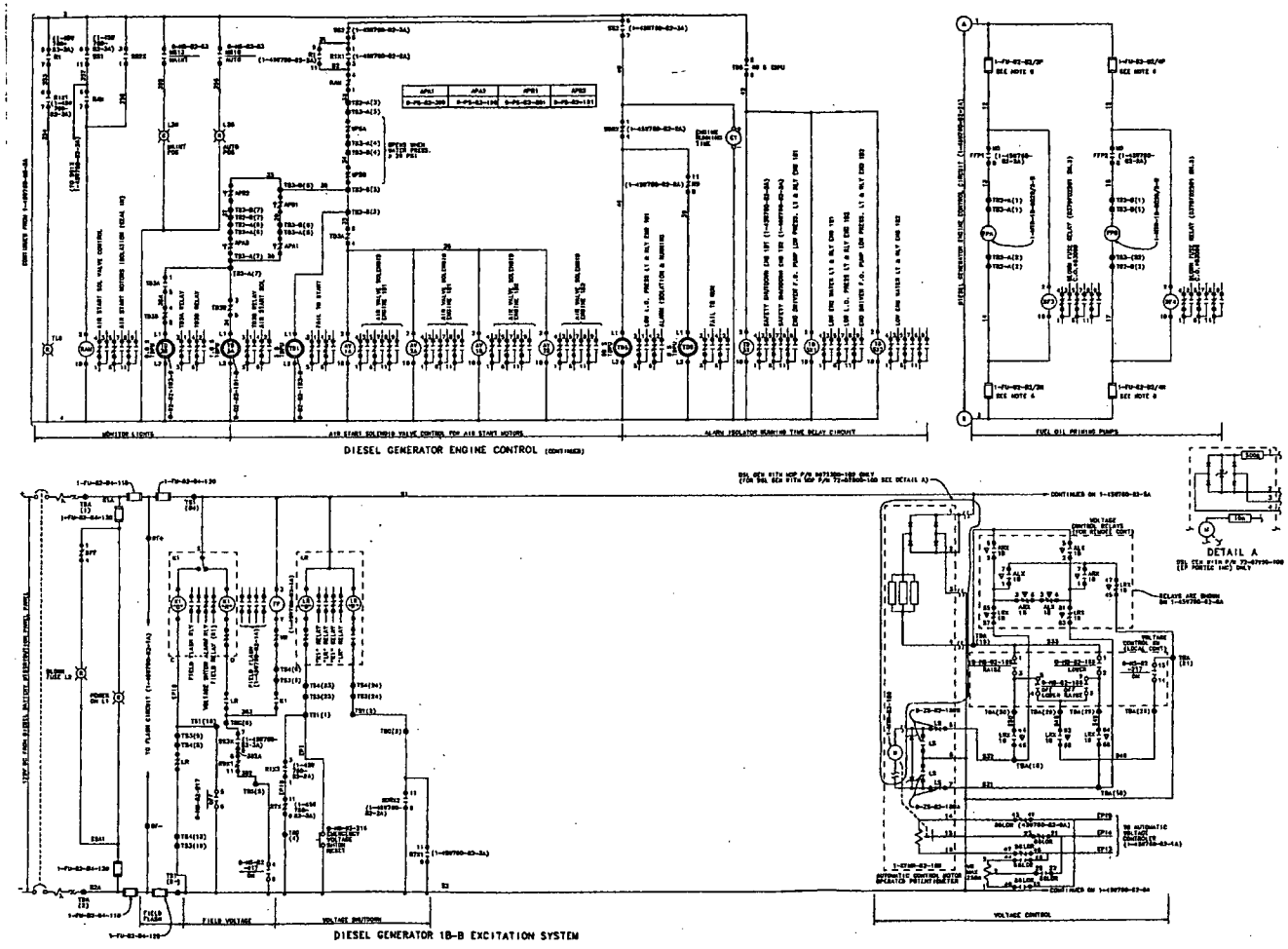

Figure 8.3-27c Diesel Generator Building Unit 1 Wiring Diagrams Standby Ds1. Gen. Schematic Diagram (DG IB-B)

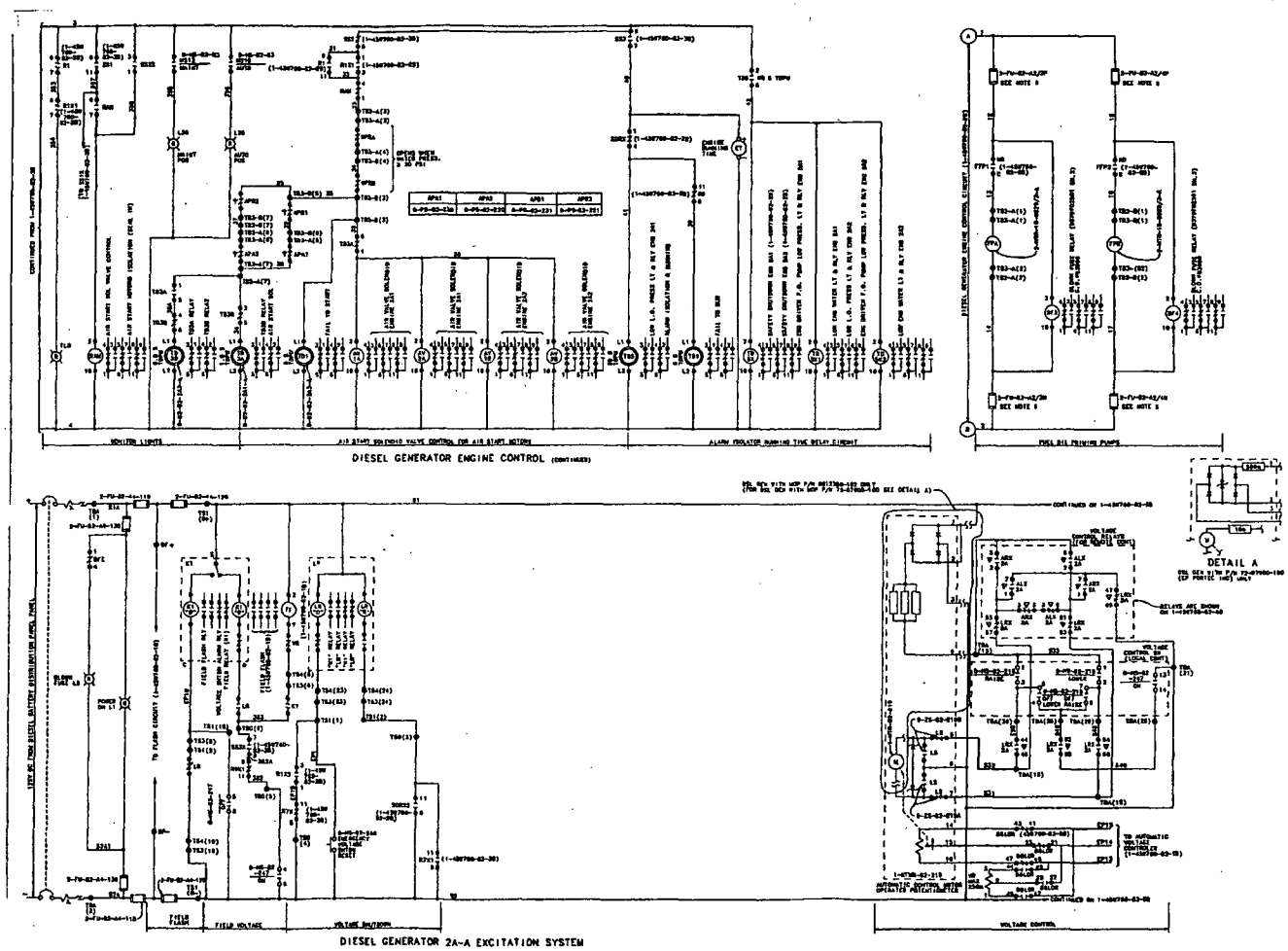

Figure 8.3-27d Diesel Generator Building Unit 2 Wiring Diagram Standby Dsl. Gen. Schematic Diagram (DG 2A-A)

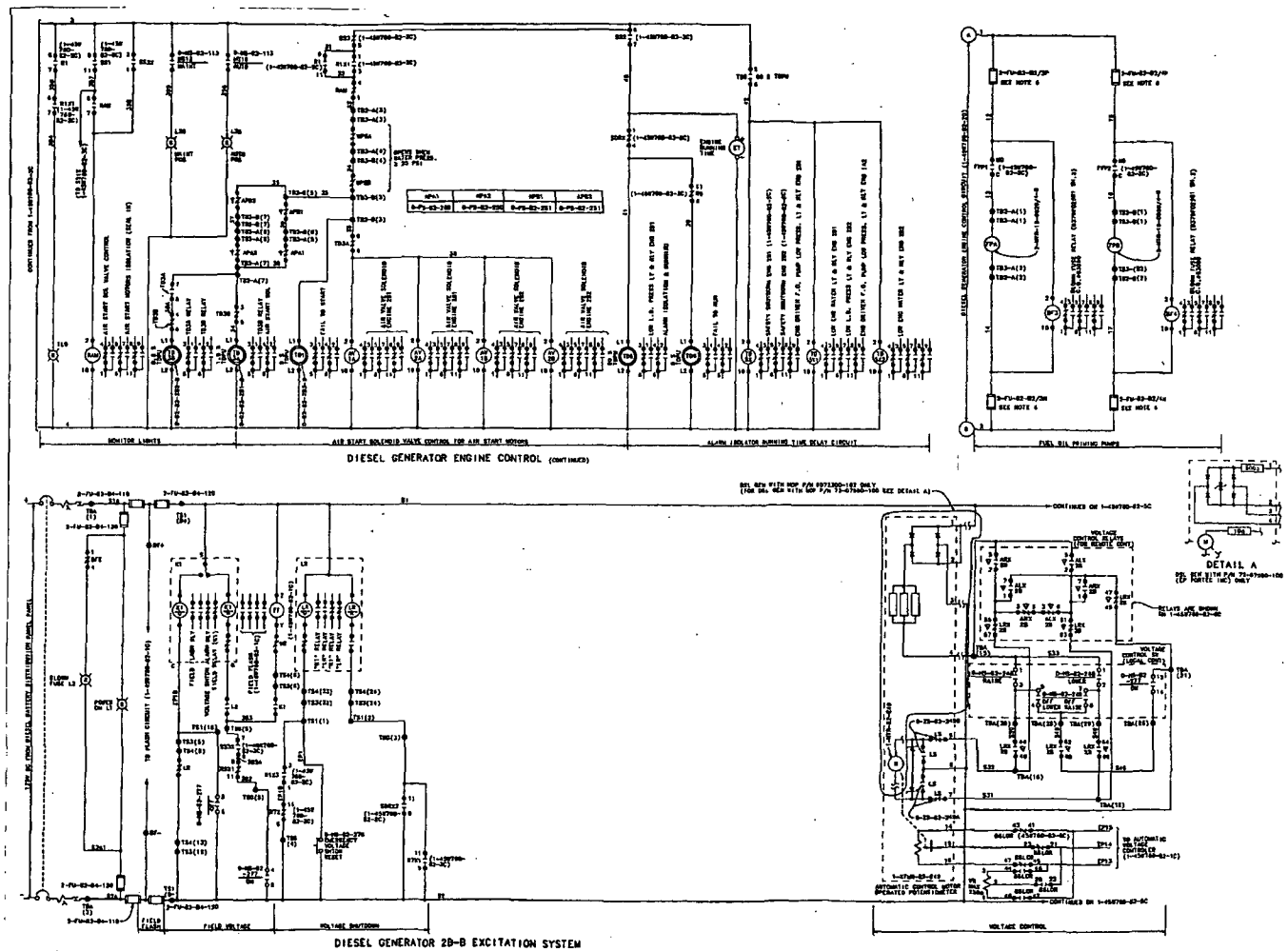

Figure 8.3-27e Diesel Generator Building Unit 2 Wiring Diagrams 6900V Standby Dsl. Gen. Schematic Diagram (DG 2B-B)

Figure 8.3-28 Deleted by Amendment 88

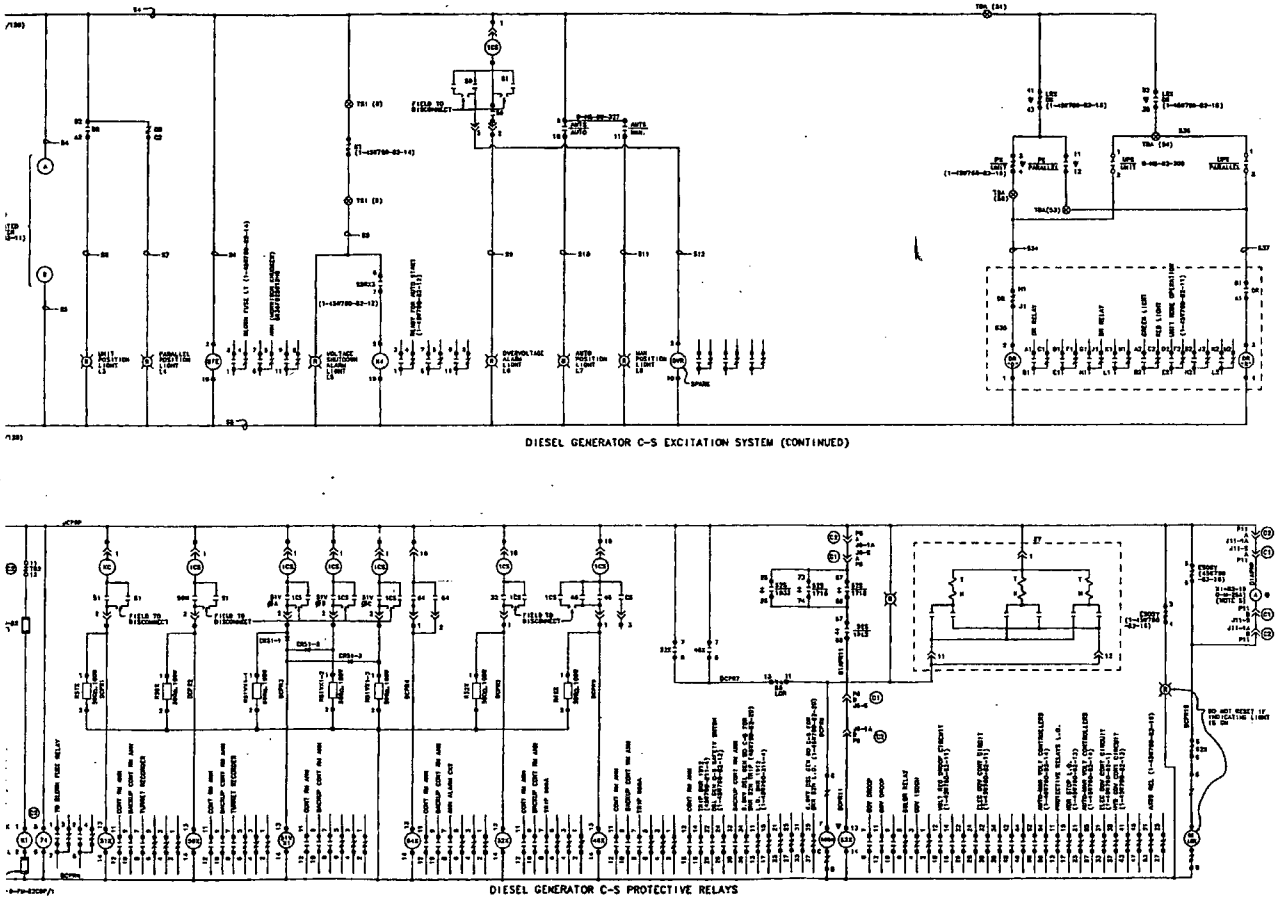

Figure 8.3-28a Additional Diesel Gen. Bldg. Units I and 2 Wiring Diagrams Standby Diesel Gen. C-S Schematic Diagrams

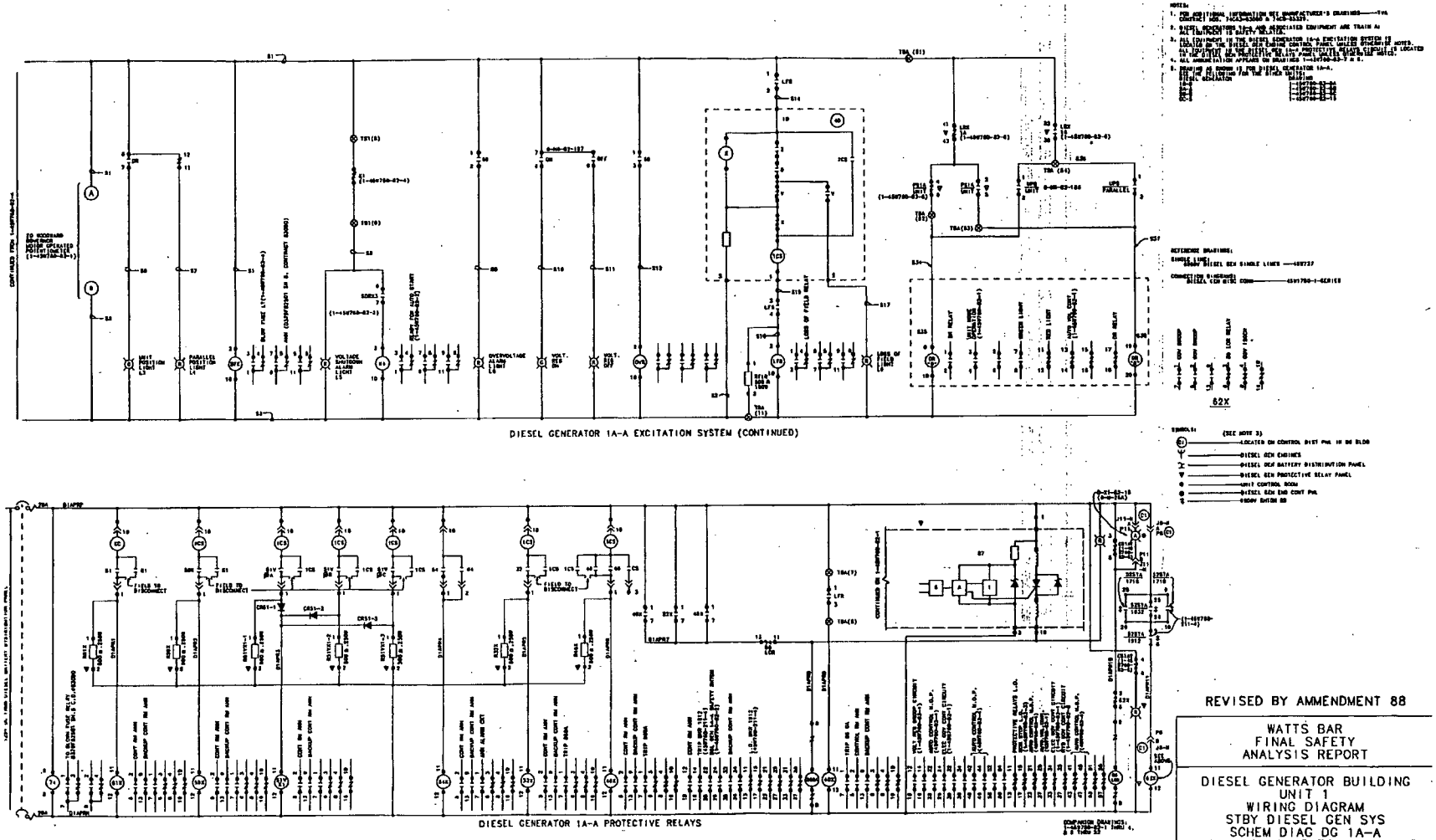

Figure 8.3-28b Diesel Generator Building Unit 1 Wiring Diagrams 6900V Standby Dsl. Gen. Schematic Diagram (DG IA-A)

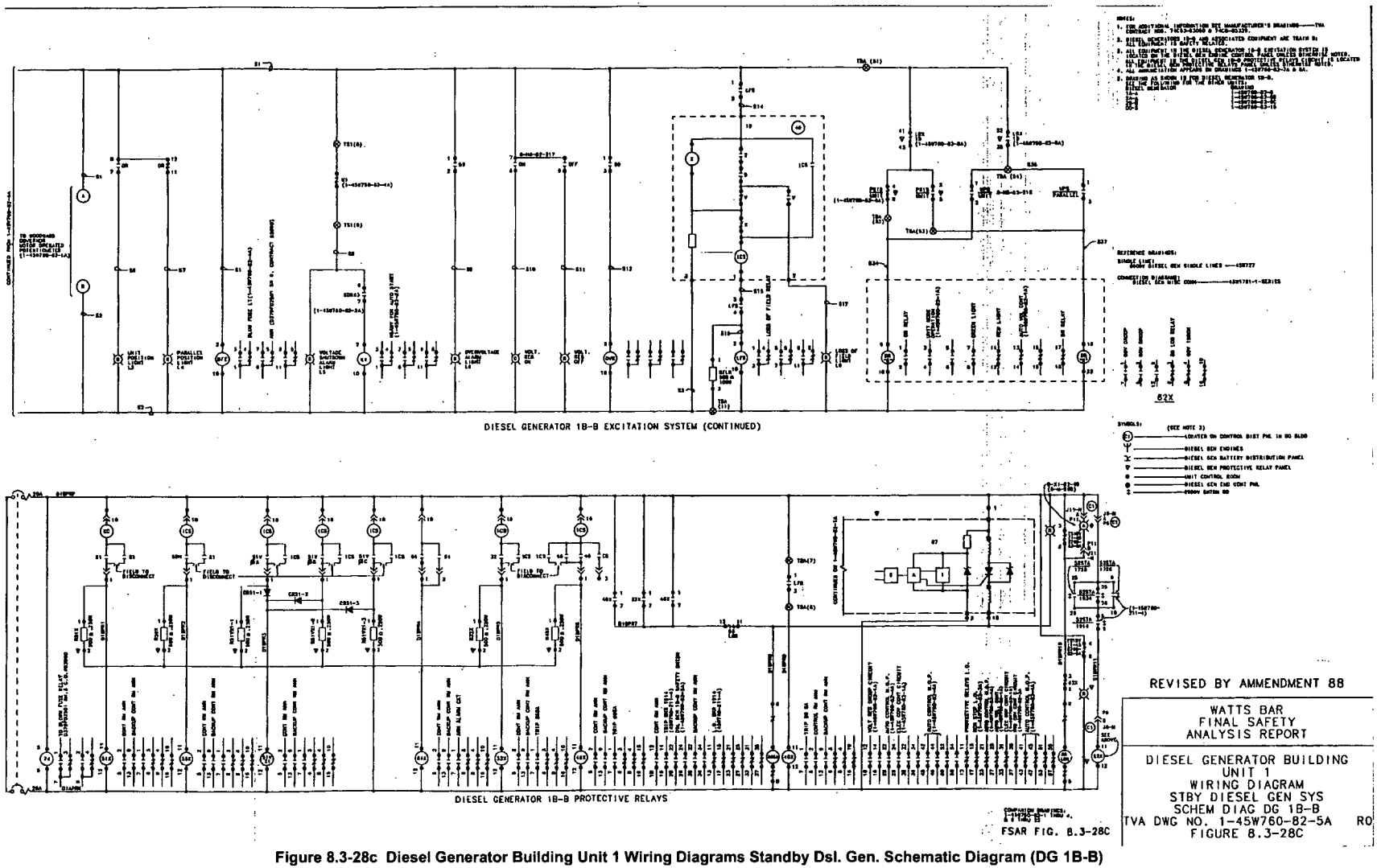

Figure 8.3-28c Diesel Generator Building Unit 1 Wiring Diagrams Standby Dsl. Gen. Schematic Diagram (DG 1B-B)

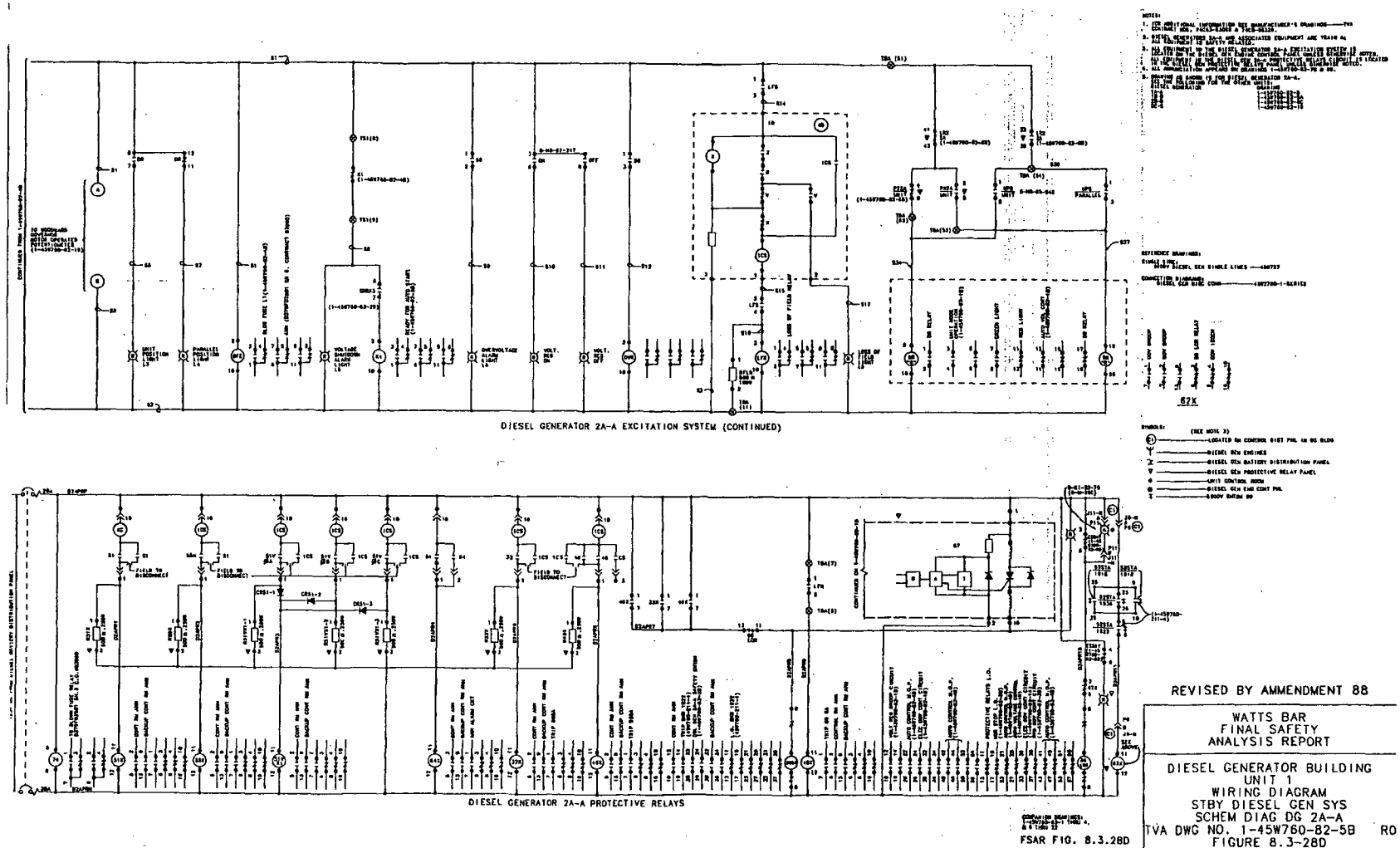

Figure 8.3-28d Diesel Generator Building Unit 2 Wiring Diagrams Standby Dsl. Gen. Schematic Diagram (DG 2A-A)

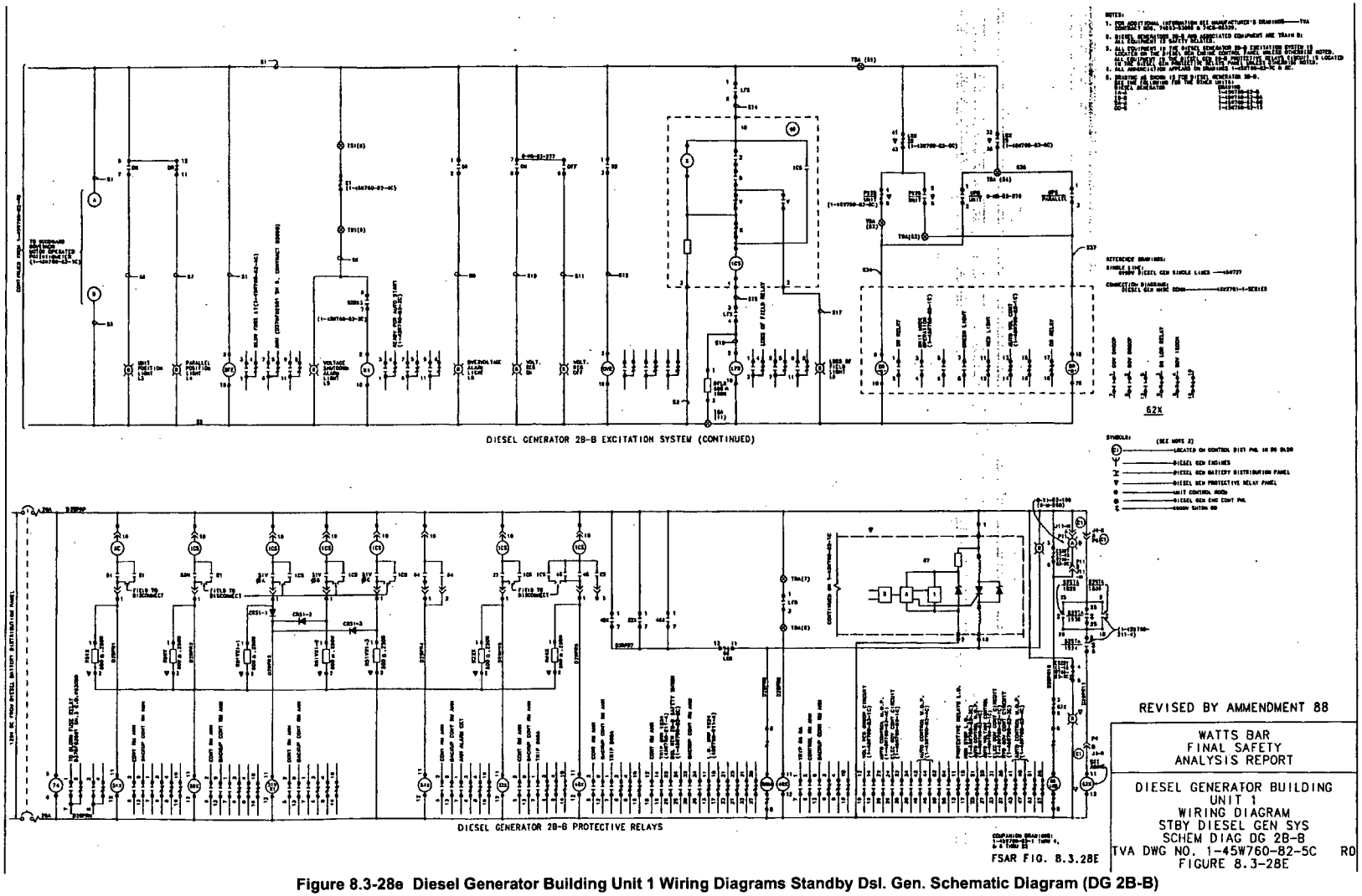

Figure 8.3-28e Diesel Generator Building Unit 1 Wiring Diagrams Standby Dsl. Gen. Schematic Diagram (DG 2B-B)

Figure 8.3-29 Deleted by Amendment 88

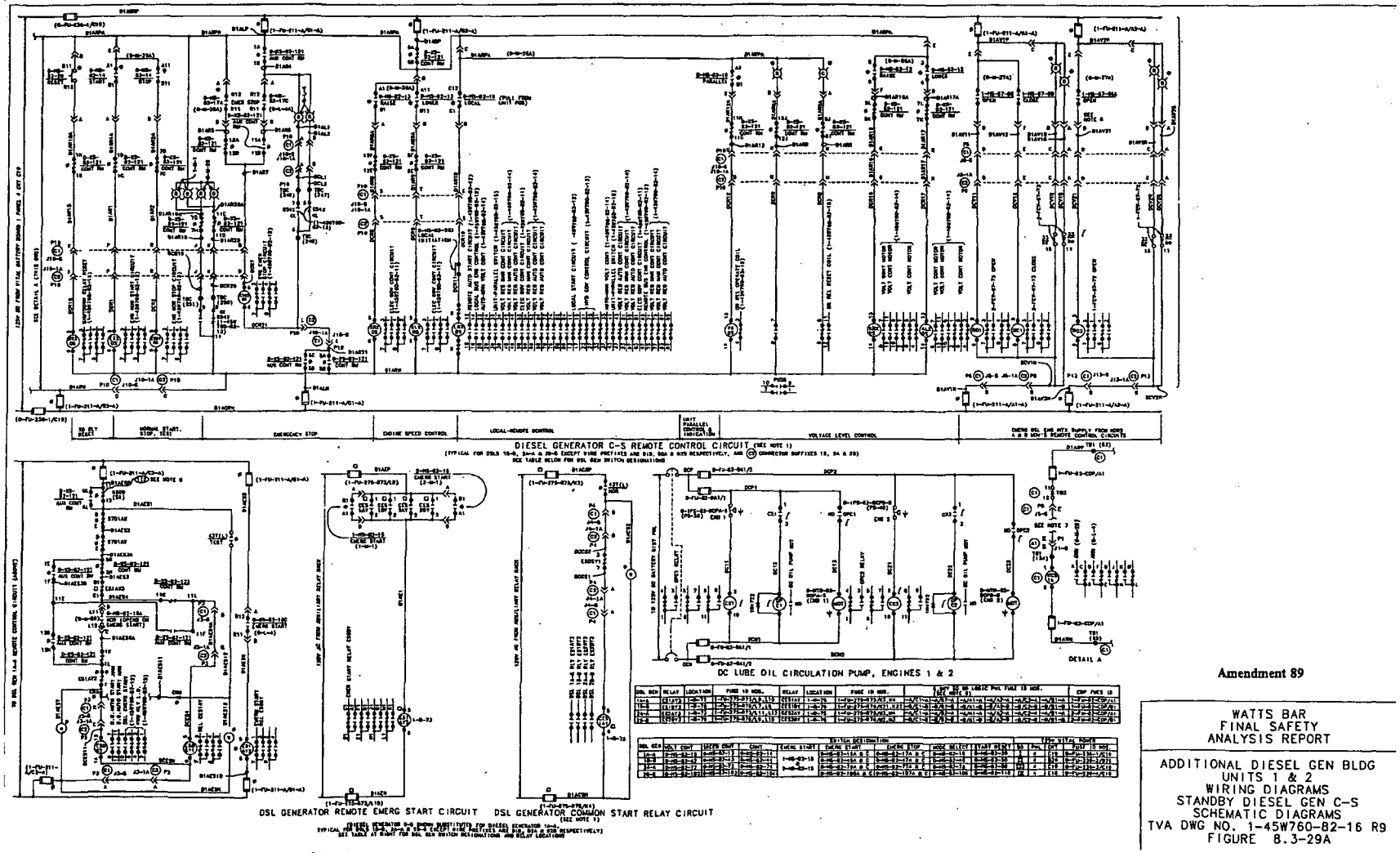

Amendment 89

WATTS BAR
FINAL SAFETY
ANALYSIS REPORT

ADDITIONAL DIESEL GEN BLDG
UNITS 1 & 2
WIRING DIAGRAMS
STANDBY DIESEL GEN C-S
SCHEMATIC DIAGRAMS
TVA DWG NO. 1-45W760-82-16 R9
FIGURE 8.3-29A

Figure 8.3-29a Additional Diesel Gen. Bldg. Units I and 2 Wiring Diagrams Standby Diesel Gen. C-S Schematic Diagrams

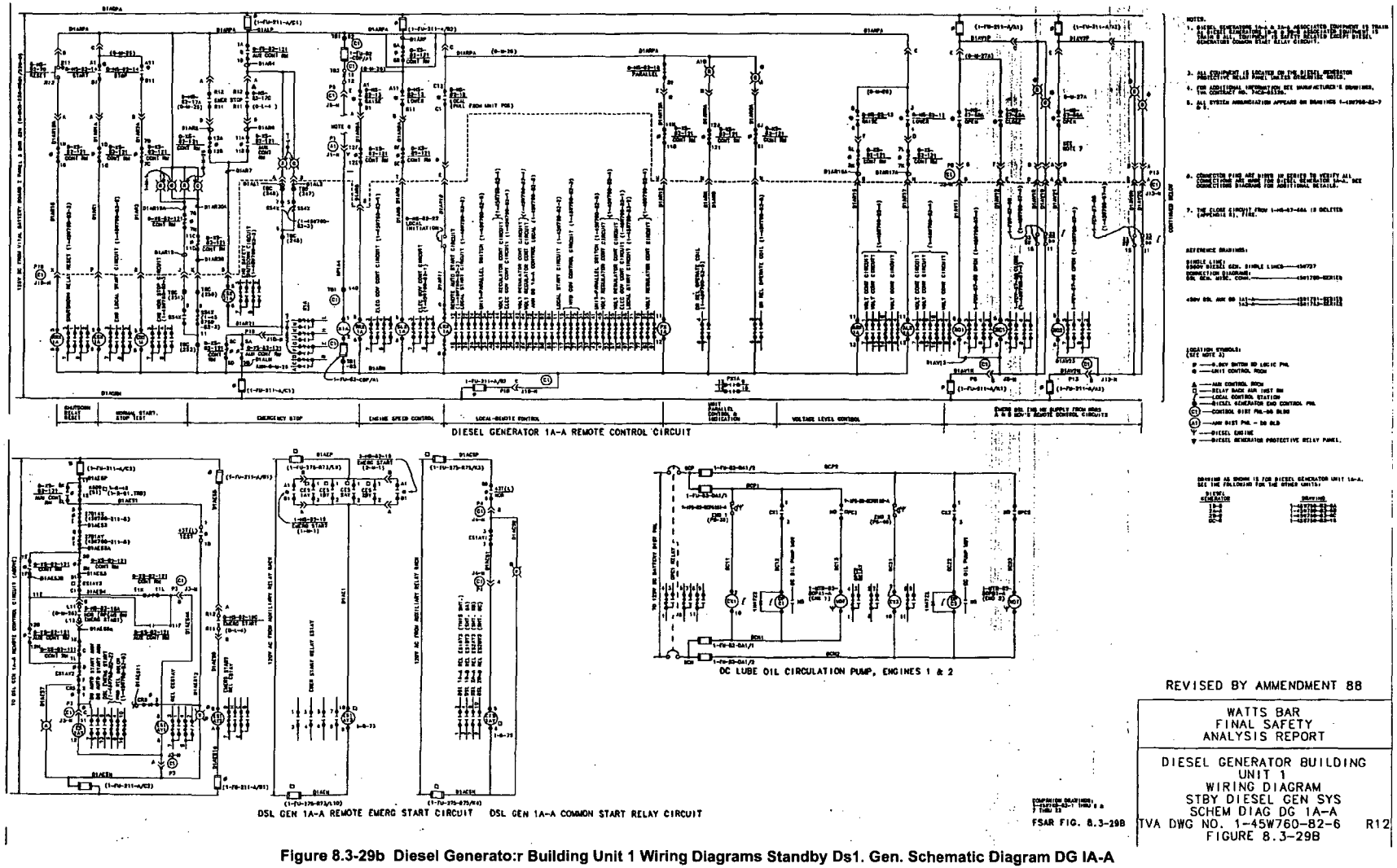

Figure 8.3-29b Diesel Generato:r Building Unit 1 Wiring Diagrams Standby Ds1. Gen. Schematic Diagram DG IA-A

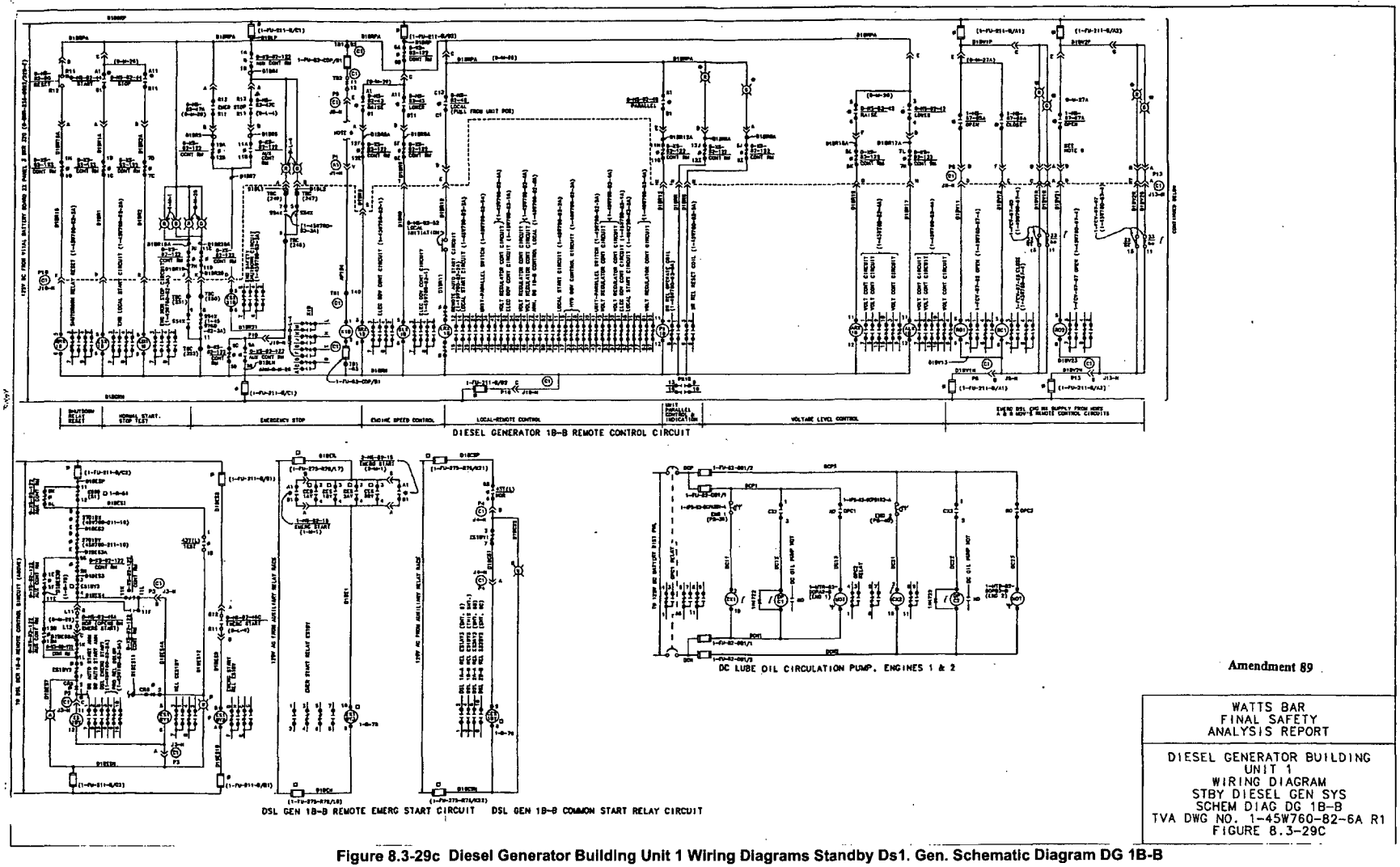

Amendment 89

WATTS BAR
FINAL SAFETY
ANALYSIS REPORT

DIESEL GENERATOR BUILDING
UNIT 1
WIRING DIAGRAM
STBY DIESEL GEN SYS
SCHEM DIAG DG 1B-B
TVA DWG NO. 1-45W760-82-6A R1
FIGURE 8.3-29C

Figure 8.3-29c Diesel Generator Building Unit 1 Wiring Diagrams Standby Ds1. Gen. Schematic Diagram DG 1B-B

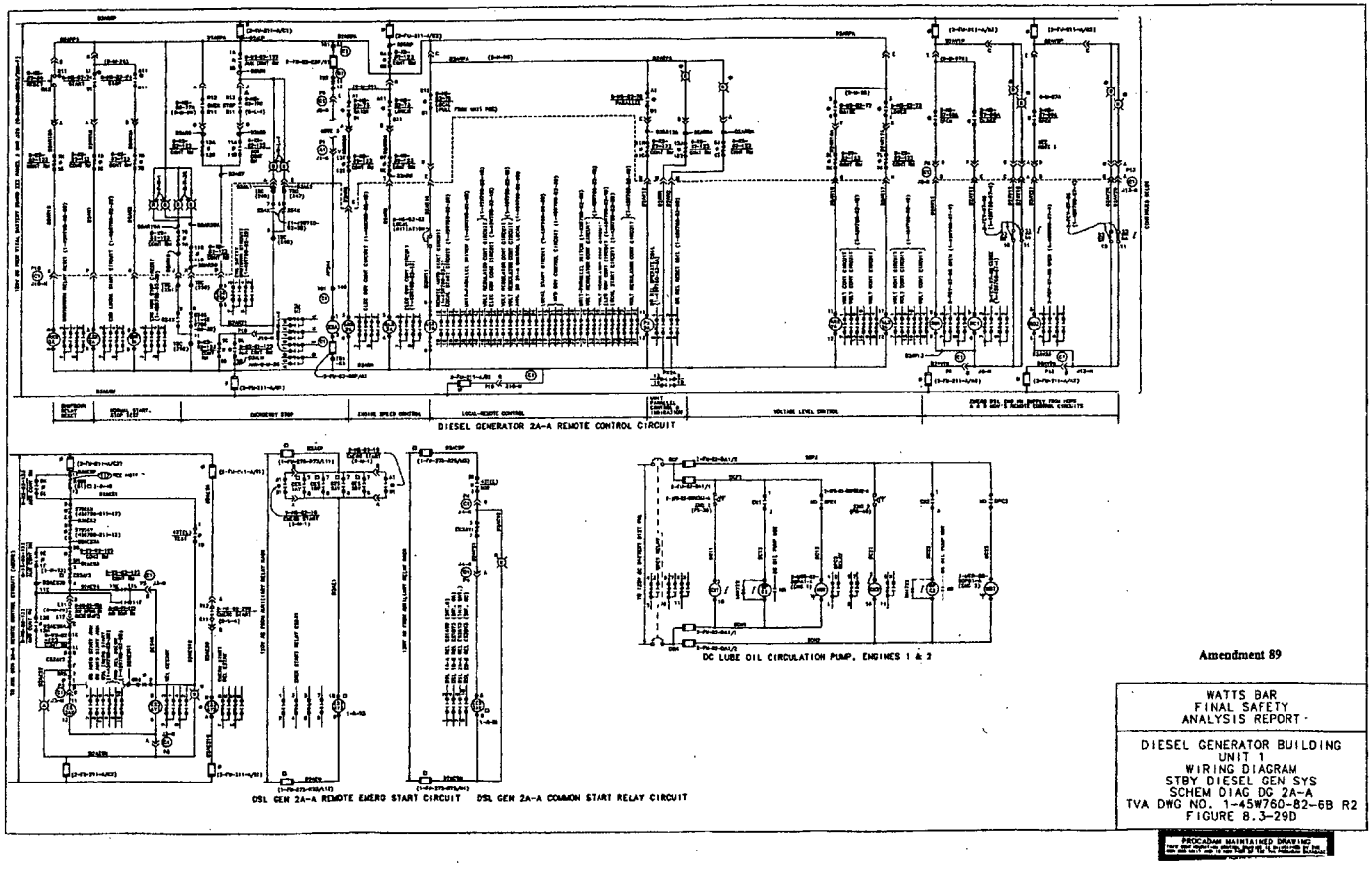

Figure 8.3-29d Diesel Generator Building Unit 1 Wiring Diagrams 6900V Standby Ds1. Gen. Schematic Diagram DG 2A-A

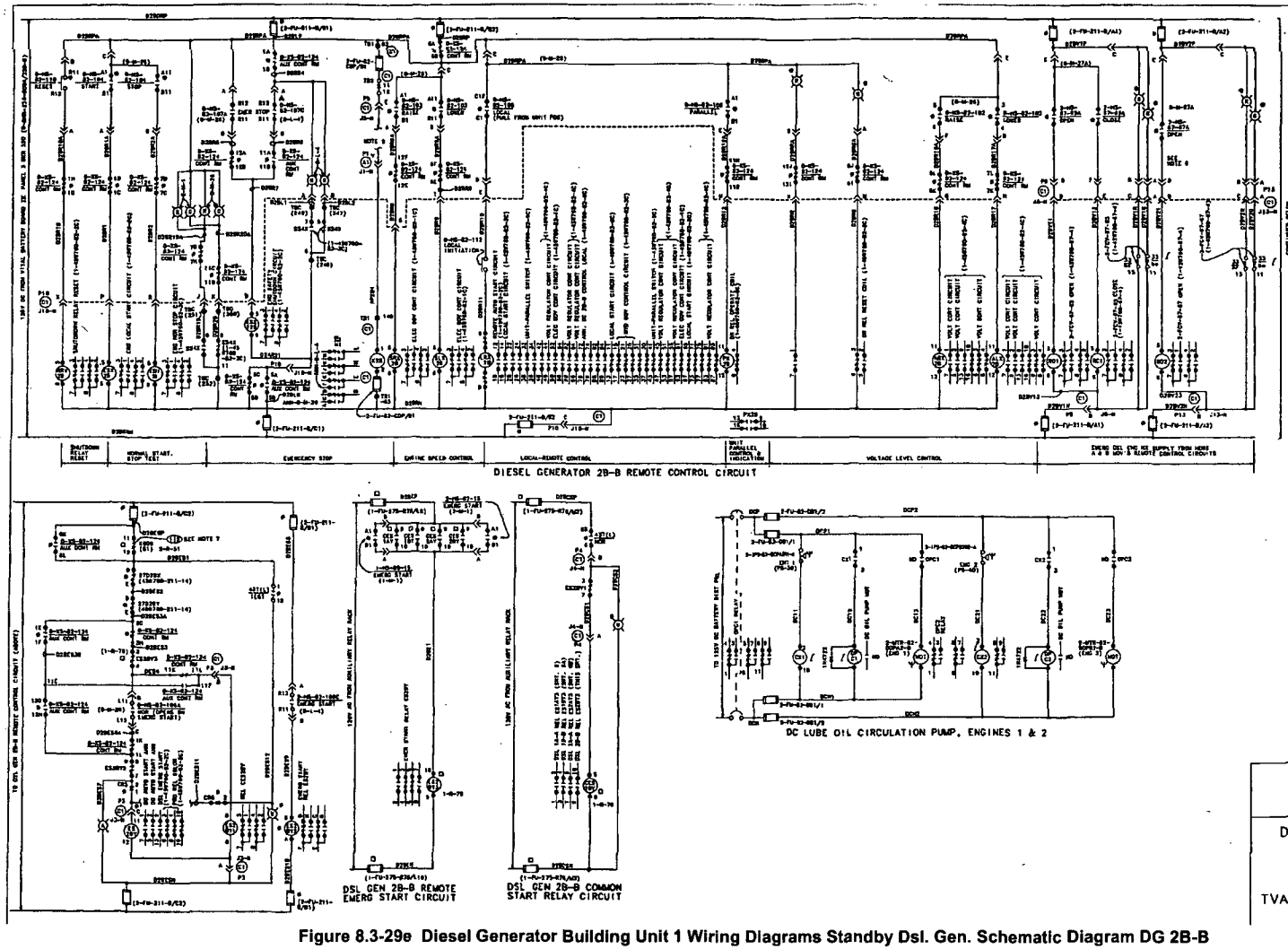

Amendment 89

WATTS BAR
FINAL SAFETY
ANALYSIS REPORT

DIESEL GENERATOR BUILDING
UNIT 1
WIRING DIAGRAM
STBY DIESEL GEN SYS
SCHEM DIAG DG 2B-B
TVA DWG NO. 1-45W760-82-6C R2
FIGURE 8.3-29E

Figure 8.3-29e Diesel Generator Building Unit 1 Wiring Diagrams Standby Dsl. Gen. Schematic Diagram DG 2B-B

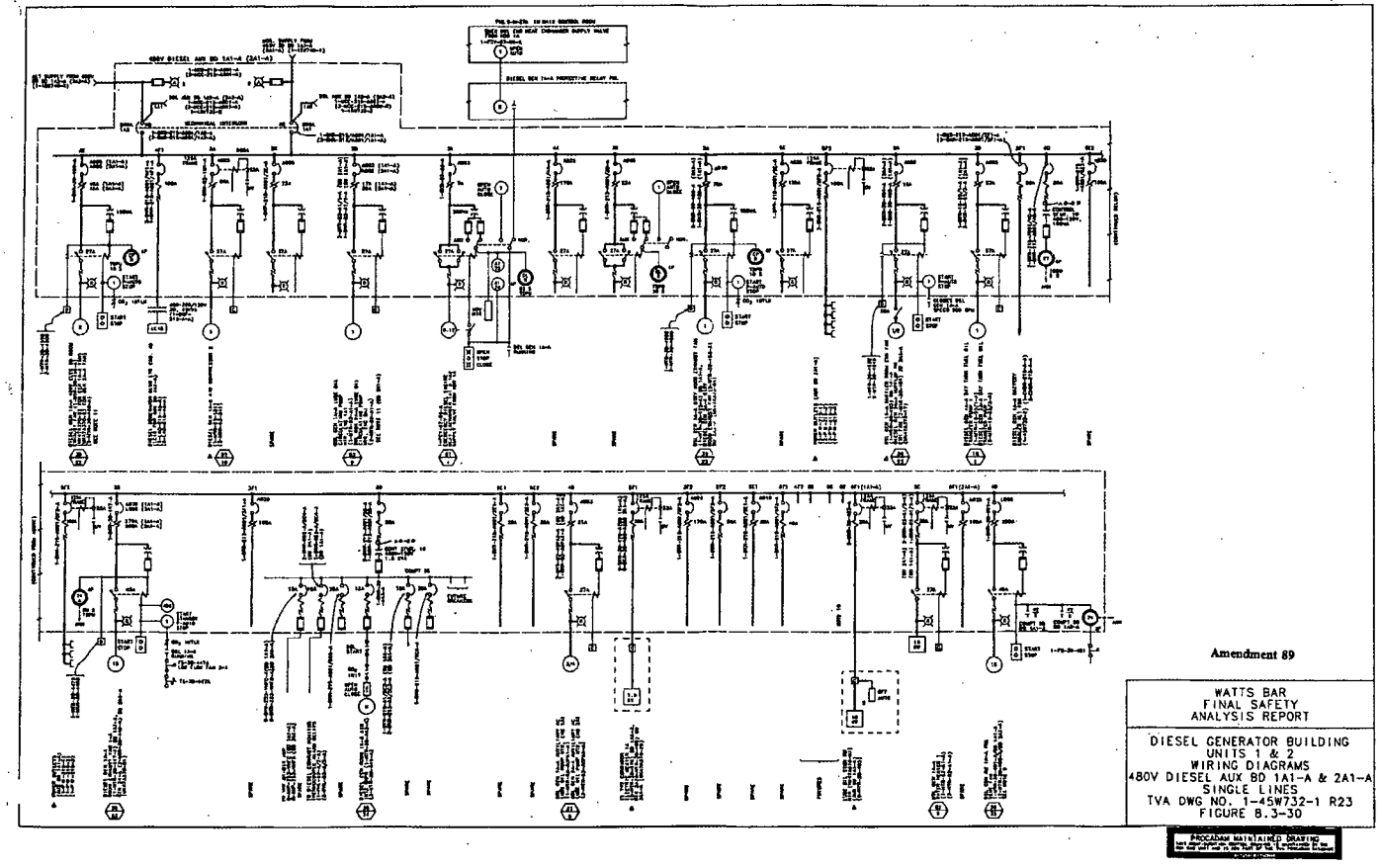

Figure 8.3-30 Diesel Gen. Bldg. Units 1 and 2 Wiring Diagrams 480V Dsl. Aux. BD IAI-A and 2AI-A Single Lines

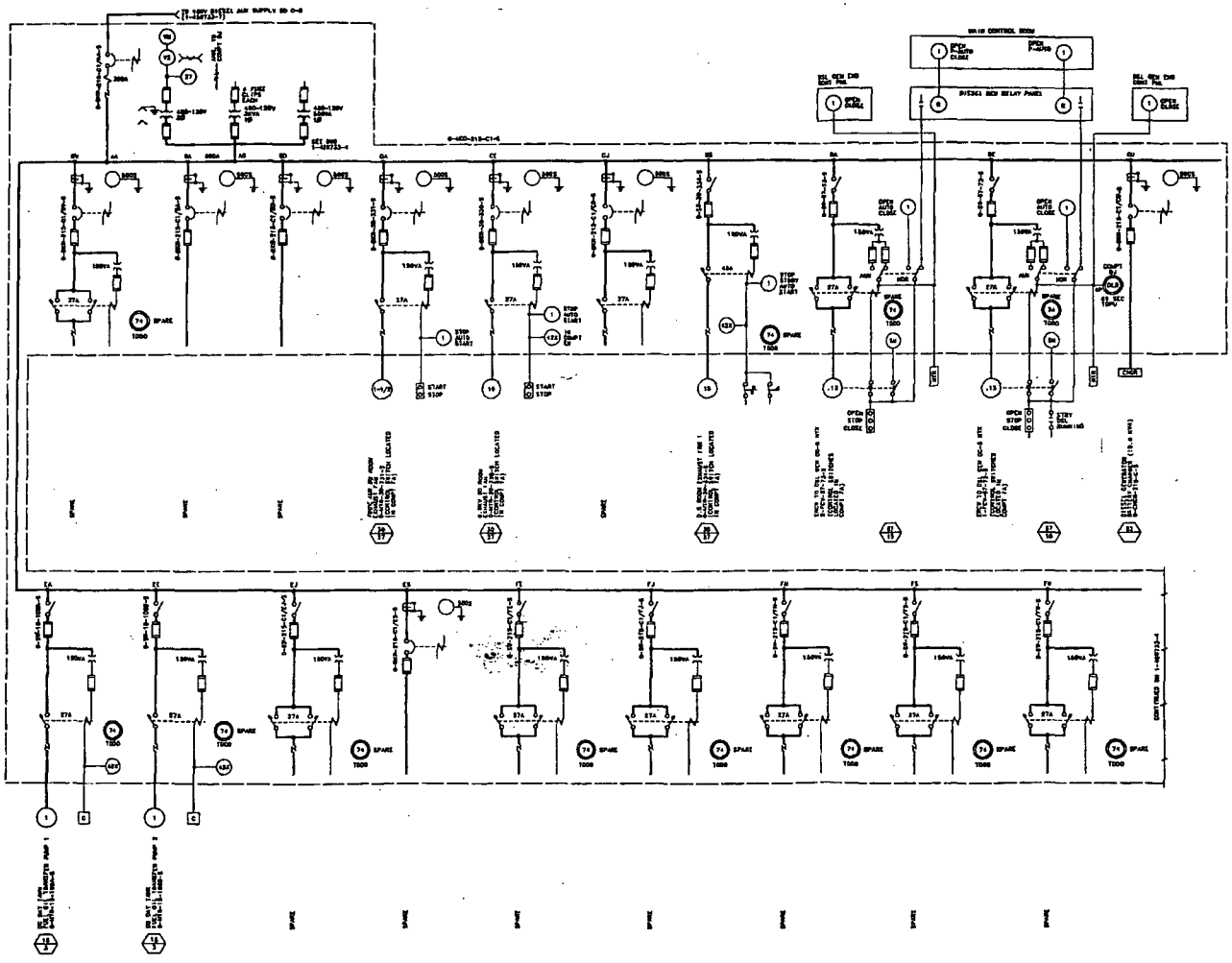

Amendment 89

WATTS BAR
FINAL SAFETY
ANALYSIS REPORT

ADDITIONAL DIESEL GEN BLDG
UNITS 1 & 2
WIRING DIAGRAMS
480V DIESEL AUX BD C1-S
SINGLE LINES
TVA DWG NO. 1-45W733-3 R5
FIGURE 8.3-30A

Figure 8.3-30a Additional Diesel Gen. Bldg. Units I and 2 Wiring Diagrams 480V Diesel Aux. BD. CI-S Single Lines

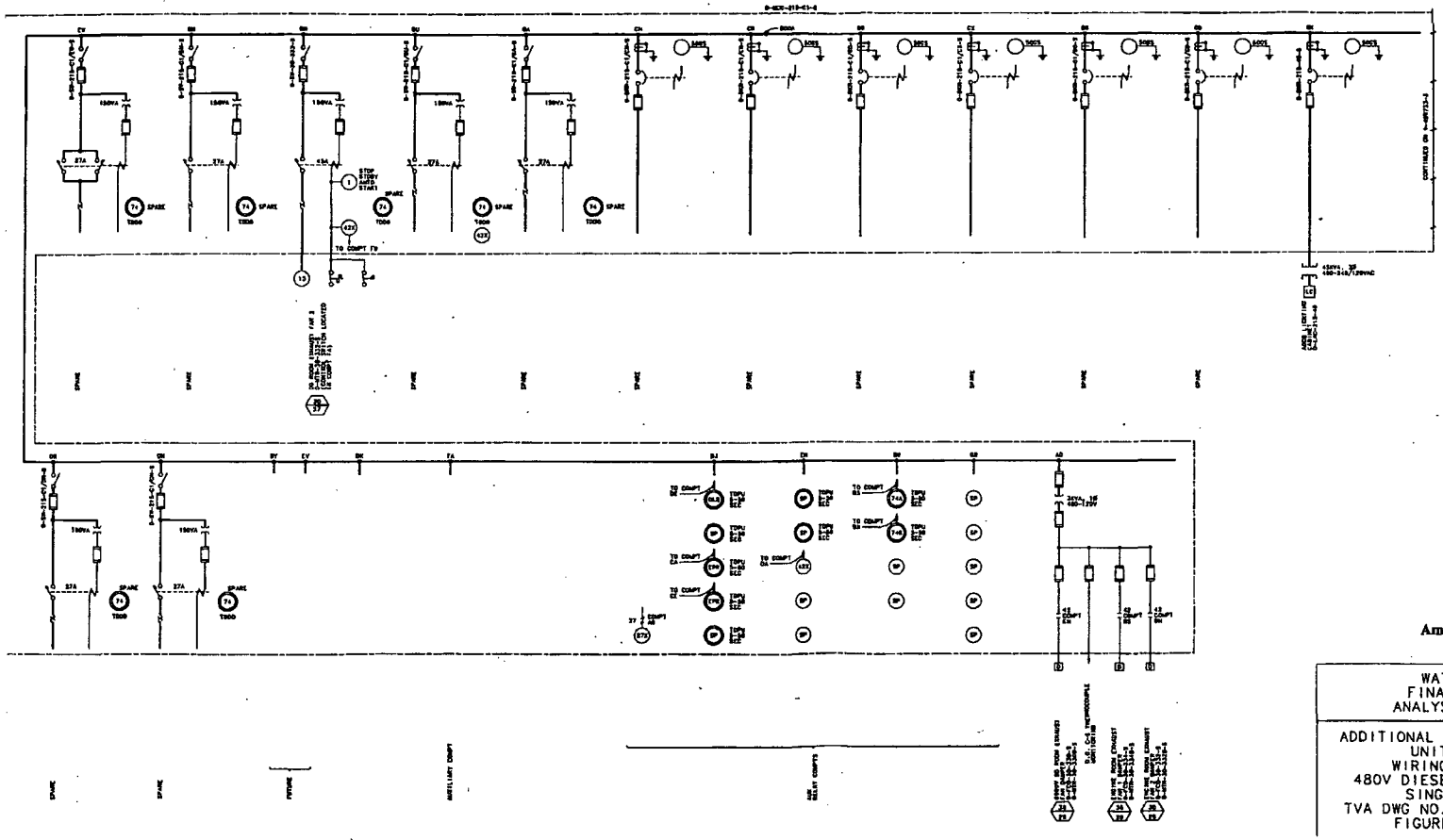

Amendment 89

WATTS BAR
FINAL SAFETY
ANALYSIS REPORT

ADDITIONAL DIESEL GEN BLDG
UNITS 1 & 2
WIRING DIAGRAMS
480V DIESEL AUX BD C1-S
SINGLE LINES
TVA DWG NO. 1-45W733-4 R5
FIGURE 8.3-30B

Figure 8.3-30b Additional Diesel Gen. Bldg. Units I and 2 Wiring Diagrams 480V Diesel Aux. BD. CI-S Single Lines

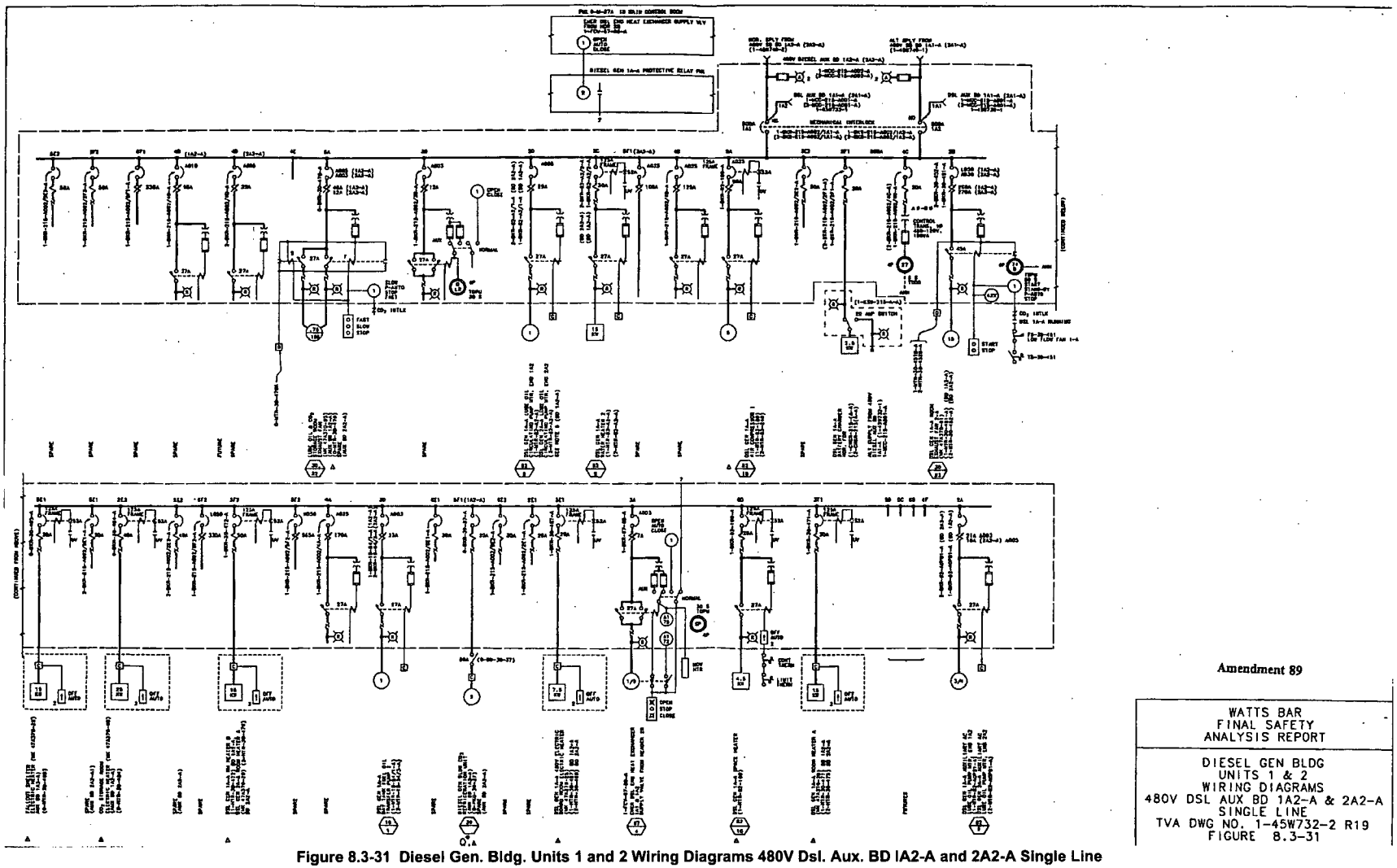

Amendment 89

WATTS BAR FINAL SAFETY ANALYSIS REPORT
DIESEL GEN BLDG UNITS 1 & 2 WIRING DIAGRAMS 480V DSL AUX BD 1A2-A & 2A2-A SINGLE LINE TVA DWG NO. 1-45W732-2 R19 FIGURE 8.3-31

Figure 8.3-31 Diesel Gen. Bldg. Units 1 and 2 Wiring Diagrams 480V Dsl. Aux. BD IA2-A and 2A2-A Single Line

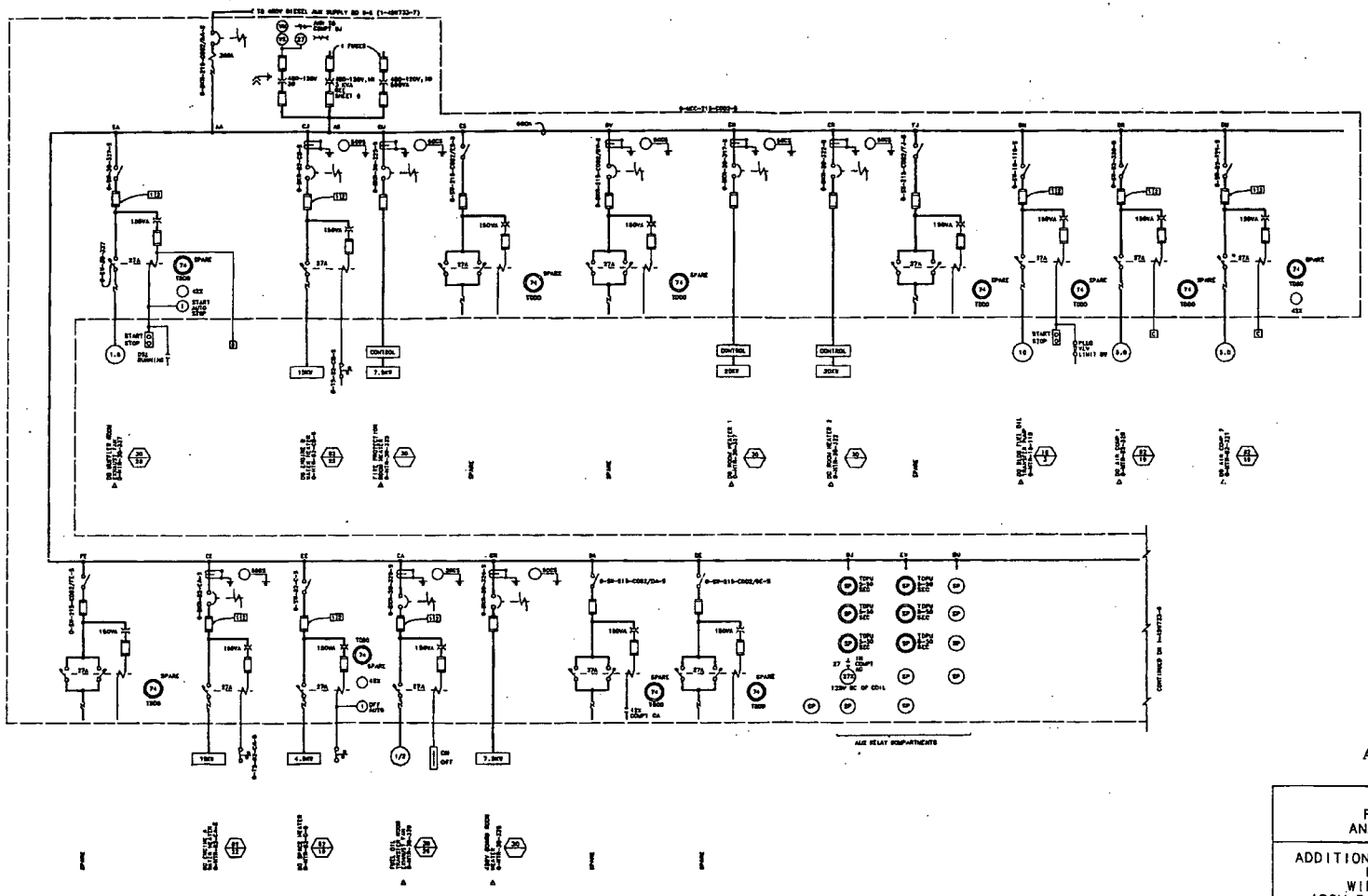

Amendment 89

WATTS BAR FINAL SAFETY ANALYSIS REPORT
ADDITIONAL DIESEL GEN BLDG UNITS 1 & 2 WIRING DIAGRAMS 480V DIESEL AUX BD C2-S SINGLE LINES TVA DWG NO. 1-45W733-5 R5 FIGURE 8.3-31A

Figure 8.3-31a Additional Diesel Gen. Bldg. Units 1 and 2 Wiring Diagrams 480V Diesel Aux BD C2-S Single Lines

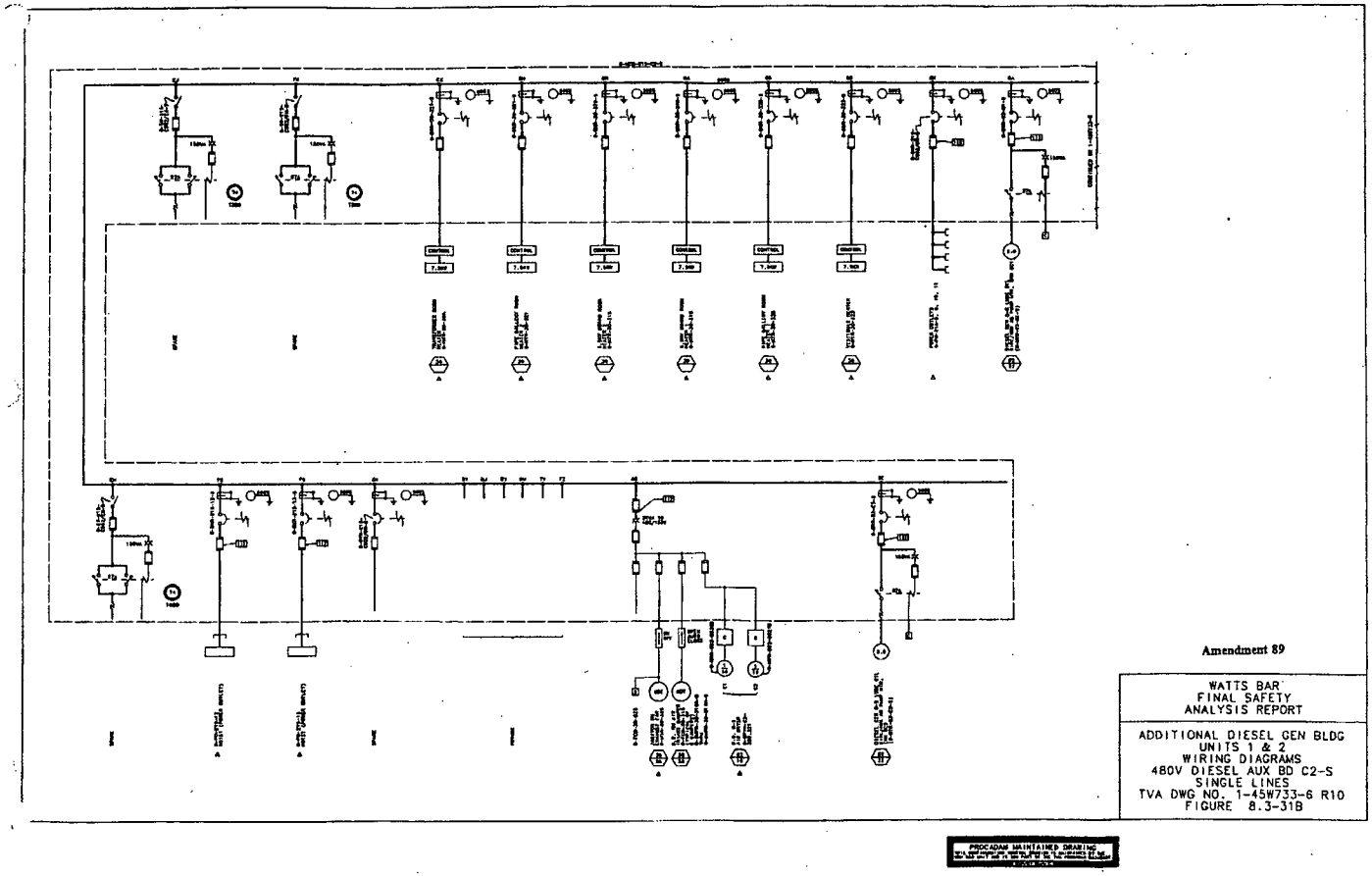

Figure 8.3-31b Additional Diesel Gen. Bldg. Units I and 2 Wiring Diagrams 480V Diesel Aux. BD C2-S Single Lines

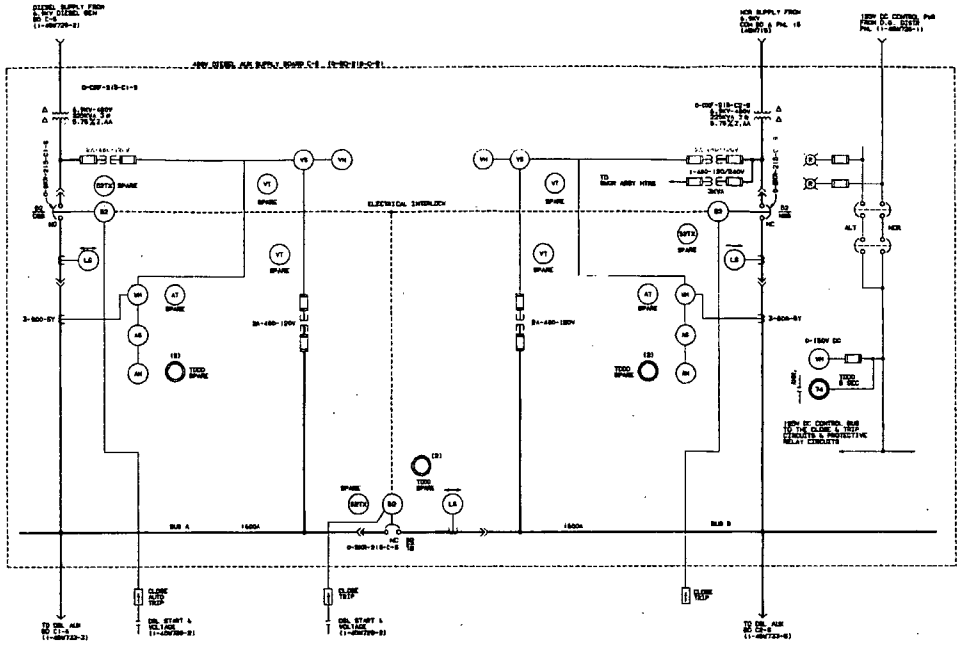

NOTES:

1. POWER IS NORMALLY SUPPLIED TO THE 480V DIESEL AUXILIARY SUPPLY BOARD FROM THE UNIT BOARD BD 1, VOLTAGE TO AUTOMATICALLY RETURNED TO BD C-S WHEN THE DIESEL GENERATOR STARTS AND RUNS AT RATED VOLTAGE AND FREQUENCY. THE 1600 BREAKER CAN BE MANUALLY CLOSED TO PROVIDE DIESEL AUX BD C-S PROVIDING THE NORMAL FEEDER BREAKER IS OPEN.
2. THE 480V DIL AUX SUPPLY BD BUS IS RATED AT 1600 AMPS & 480V CONTINUOUS AND BRACED FOR 84,000 SYMMETRICAL AMPS SHORT CIRCUIT. ALL 480V BREAKERS ARE GE TYPE EC-1600 RATED AT 1600 AMPS CONTINUOUS WITH AN INTERRUPTING RATING OF 50,000 SYMMETRICAL AMPS.
3. FOR SWITCHGEAR DETAILS SEE 600 DRAWINGS ON TVA CONTRACT 3003-628409

REFERENCE DRAWINGS:
45W734-8181S1 - 480V DIESEL GENERATORS C-S SINGLE LINE
45W760-819-1,8- 480V DIESEL AUX SUPPLY BOARD SCHEMATIC DIAGRAMS
45W733-1-6 - 480V DIESEL AUX BD C-S & CD-S SINGLE LINE

SOLID STATE TRIP UNIT SETTING				
		PICK-UP	DELAY	AMPERE TAP
DSB	LONG TIME	1.0	INT	250
	SHORT TIME	6.0	INT	
MCB	LONG TIME	1.0	INT	250
	SHORT TIME	6.0	INT	
TB	LONG TIME	0.6	INT	250
	SHORT TIME	6.0	INT	

AMENDMENT 75

WATTS BAR
FINAL SAFETY
ANALYSIS REPORT

ADDITIONAL DIESEL GEN BLDG
UNITS 1 & 2
WIRING DIAGRAMS
480V DIESEL AUX BD C-S
SINGLE LINE
TVA DWG NO. 1-45W733-7 R1
FIGURE 8.3-31C

Figure 8.3-31c Additional Diesel Gen. Bldg. Units 1 and 2 Wiring Diagrams 480V Diesel Aux. BD C-S Single Line

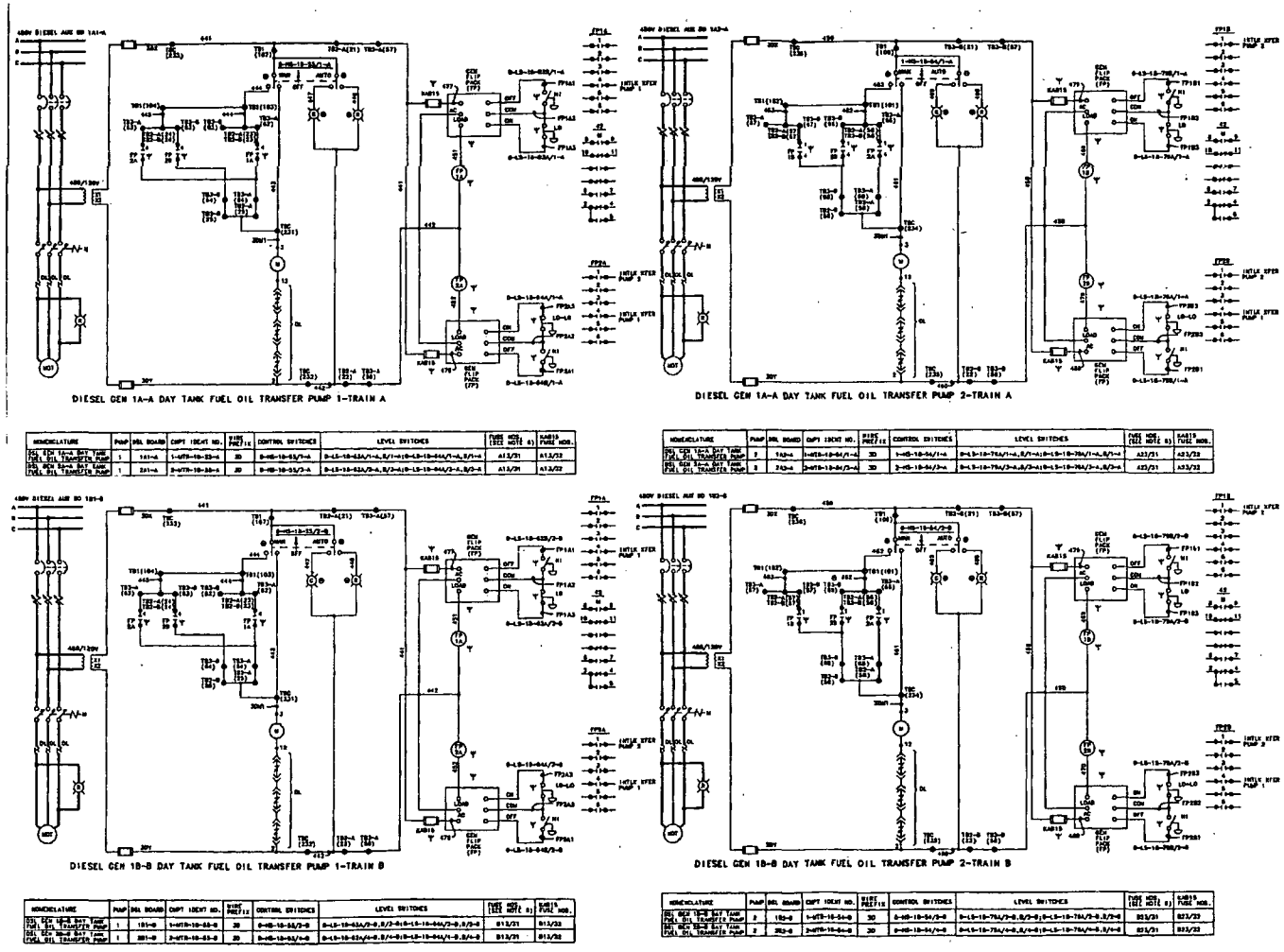

Amendment 89

WATTS BAR
FINAL SAFETY
ANALYSIS REPORT

DIESEL BUILDING
UNITS 1 & 2
WIRING DIAGRAMS
FUEL OIL SYSTEM
SCHEMATIC DIAGRAM
TVA DWG NO. 1-45W760-18-1 R7
FIGURE 8.3-32

Figure 8.3-32 Diesel Building Units 1 and 2 Wiring Diagrams Fuel Oil System Schematic Diagram

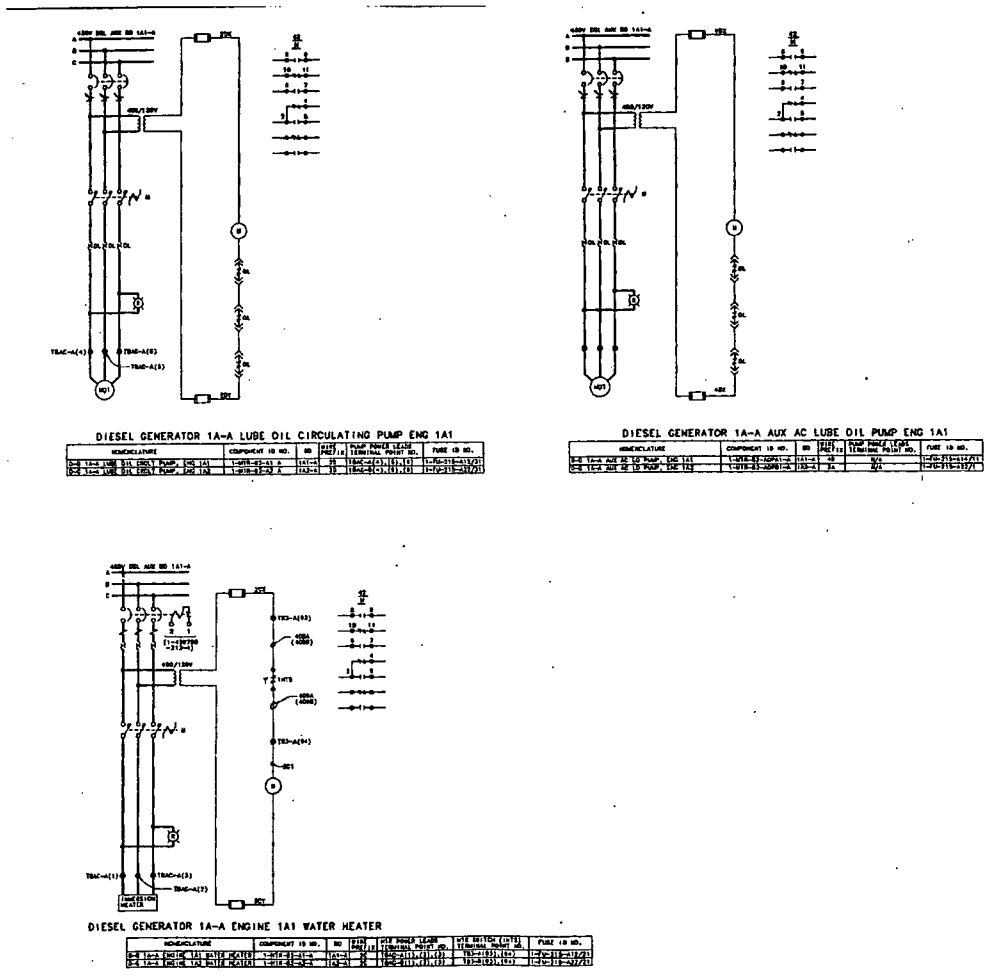

Figure 8.3-33 Diesel Generator Building Unit 1 Wiring Diagram Standby Dsl. Generator Sys. Schematic Diagram (DG IA-A)

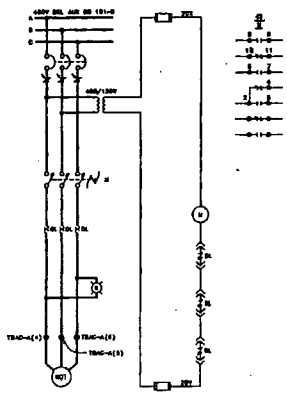

DIESEL GENERATOR 1B-B LUBE OIL CIRCULATING PUMP ENG 1B1

NOMENCLATURE	COMPONENT ID NO.	SD	WIRE PREFIX	PWR POWER LEADS TERMINAL POINT NO.	FUSE ID NO.
D-G 1B-B LUBE OIL CIRCL PUMP, ENG 1B1	1-MTR-82-81-B	1B1-B	3C	TB4C-4(1),(2),(3)	1-FU-215-812/21
D-G 1B-B LUBE OIL CIRCL PUMP, ENG 1B2	1-MTR-82-82-B	1B1-B	3C	TB4C-8(1),(2),(3)	1-FU-215-822/21

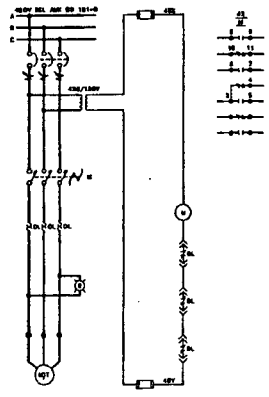

DIESEL GENERATOR 1B-B ENG 1B1 & 1B2 AUX AC LUBE OIL PUMPS

NOMENCLATURE	COMPONENT ID NO.	SD	WIRE PREFIX		FUSE ID NO.
D-G 1B-B AUX AC LO PUMP, ENG 1B1	1-MTR-82-MPP2-B	1B1-B	4E	N/A	1-FU-215-811/21
D-G 1B-B AUX AC LO PUMP, ENG 1B2	1-MTR-82-MPP2-B	1B2-B	3A	N/A	1-FU-215-821/21

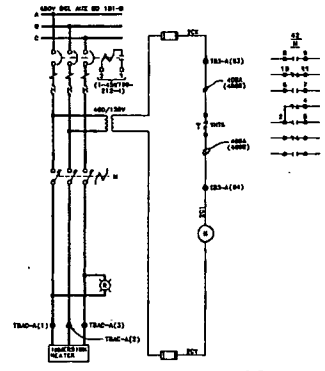

DIESEL GENERATOR 1B-B ENGINE 1B1 WATER HEATER

NOMENCLATURE	COMPONENT ID NO.	SD	WIRE PREFIX	DTS POWER LEADS TERMINAL POINT NO.	DTS SWITCH (1HTS) TERMINAL POINT NO.	FUSE ID NO.
D-G 1B-B ENGINE 1B1 WATER HEATER	1-MTR-82-B1-B	1B1-B	3C	TB4C-4(1),(2),(3)	TB3-8(83),(84)	1-FU-215-812/21
D-G 1B-B ENGINE 1B2 WATER HEATER	1-MTR-82-B2-B	1B2-B	3C	TB4C-8(1),(2),(3)	TB3-8(83),(84)	1-FU-215-822/21

Amendment 89

WATTS BAR
FINAL SAFETY
ANALYSIS REPORT

DIESEL GENERATOR BUILDING
UNIT 1
WIRING DIAGRAM
STBY DIESEL GEN SYS
SCHEM DIAG DG 1B-B
TVA DWG NO. 1-45W760-82-9A R0
FIGURE 8.3-33A

Figure 8.3-33a Diesel Generator Building Unit 1 Wiring Diagram Standby Dsl. Generator Sys. Schematic Diagram (DG IB-B)

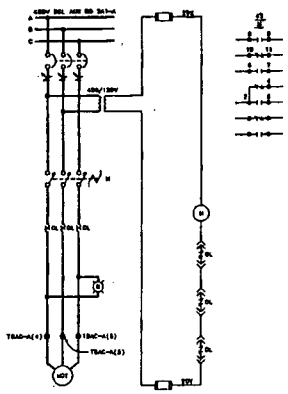

DIESEL GENERATOR 2A-A LUBE OIL CIRCULATING PUMP ENG 2A1

NOMENCLATURE	COMPONENT ID NO.	RD	WIRE PREF/#1	PUMP POWER LEADS TERMINAL POINT NO.	FUSE ID NO.
D-G 2A-A LUBE OIL CIRCL PUMP, ENG 2A1	2-MTR-82-41-A	2A1-A	2C	TBAC-2(1),(2),(3)	2-FU-312-A17/21
D-G 2A-A LUBE OIL CIRCL PUMP, ENG 2A2	2-MTR-82-42-A	2A2-A	2C	TBAC-2(1),(2),(3)	2-FU-312-A27/21

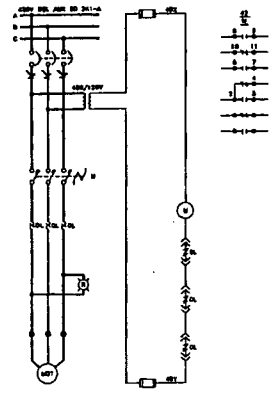

DIESEL GENERATOR 2A-A AUX AC LUBE OIL PUMP ENG 2A1

NOMENCLATURE	COMPONENT ID NO.	RD	WIRE PREF/#1	PUMP POWER LEADS TERMINAL POINT NO.	FUSE ID NO.
D-G 2A-A AUX AC LB PUMP, ENG 2A1	2-MTR-82-ADP41-A	2A1-A	4B	N/A	2-FU-312-A14/21
D-G 2A-A AUX AC LB PUMP, ENG 2A2	2-MTR-82-ADP81-A	2A2-A	2A	N/A	2-FU-312-A27/21

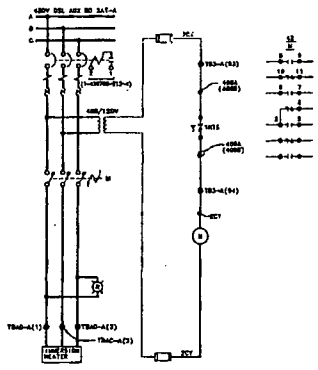

DIESEL GENERATOR 2A-A ENGINE 2A1 WATER HEATER

NOMENCLATURE	COMPONENT ID NO.	RD	WIRE PREF/#1	WTR POWER LEADS TERMINAL POINT NO.	WTR SWITCH (THRTS) TERMINAL POINT NO.	FUSE ID NO.
D-G 2A-A ENGINE 2A1 WATER HEATER	2-HTR-82-41-A	2A1-A	2C	TBAC-2(1),(2),(3)	TB2-2(92),(94)	2-FU-312-A11/21
D-G 2A-A ENGINE 2A2 WATER HEATER	2-HTR-82-42-A	2A2-A	2C	TBAC-2(1),(2),(3)	TB2-2(92),(94)	2-FU-312-A27/21

Figure 8.3-33b Diesel Generator Building Unit 1 Wiring Diagram Standby Dsl Generator Sys Schematic Diagram (DG 2A-A)

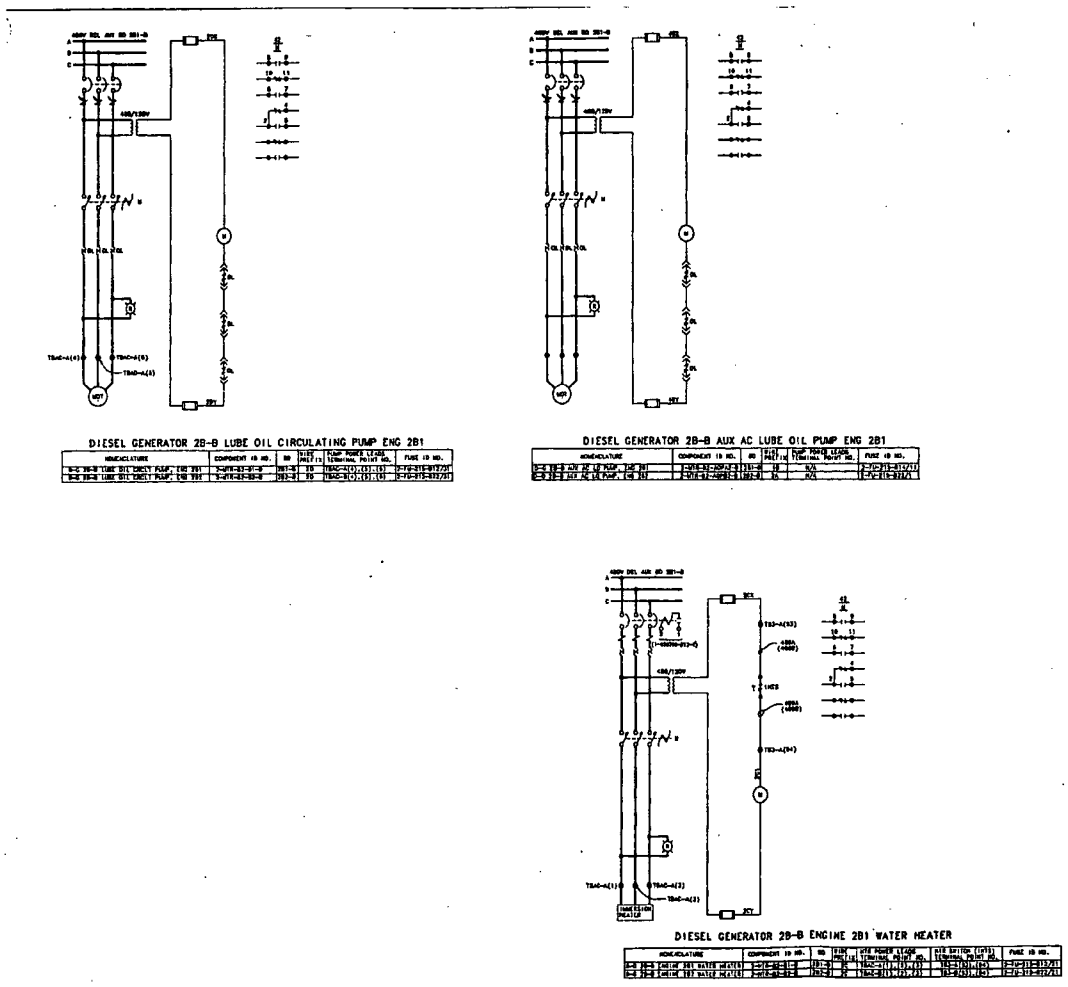

Figure 8.3-33c Diesel Generator Building Unit 1 Wiring Diagram Standby Dsl Generator Sys Schematic Diagram (DG 2B-B)

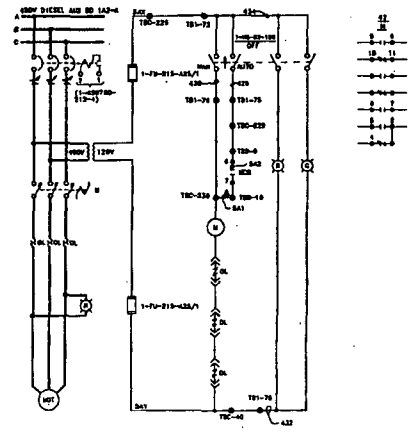

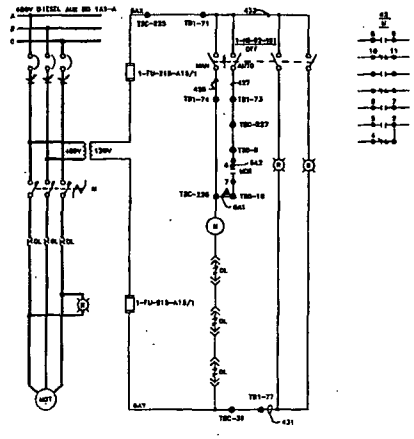

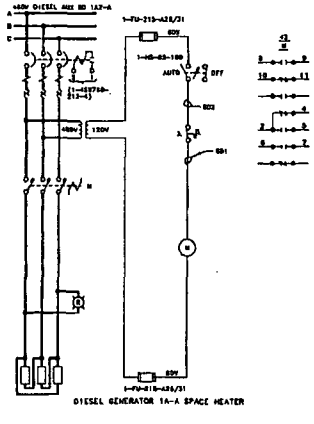

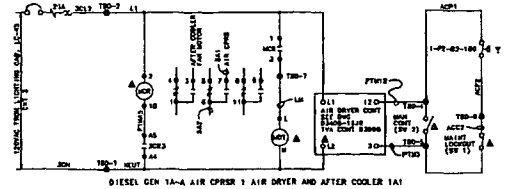

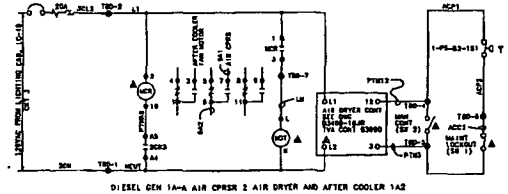

Figure 8.3-34 Diesel Gen. Bldg. Unit 1 Wiring Diagrams Standby Diesel Generator Sys Schematic Diagram (DG IA-A)

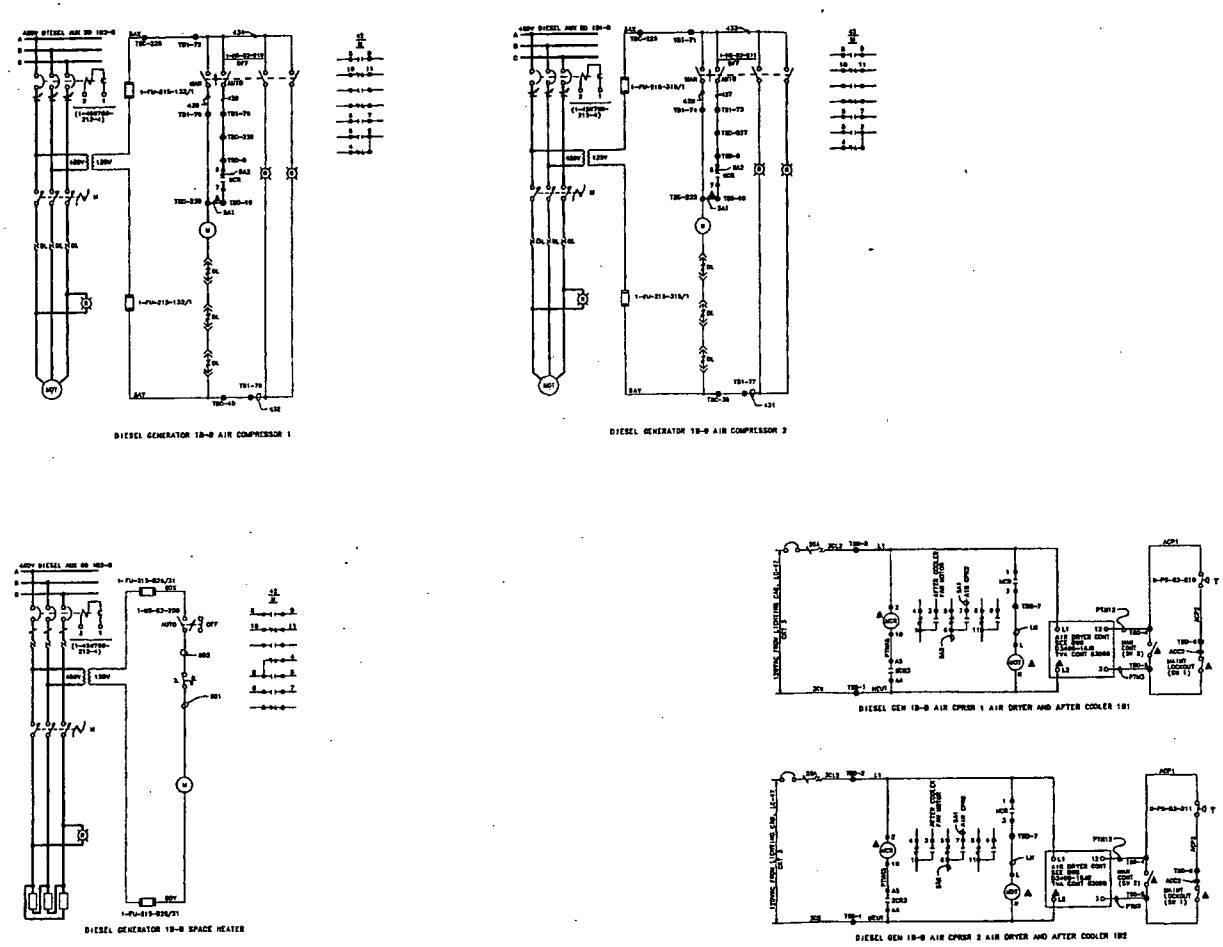

Figure 8.3-34a Diesel Generator Building Unit 1 Wiring Diagram Standby Dsl. Gen. Sys. Schematic Diagram (OG IB-B)

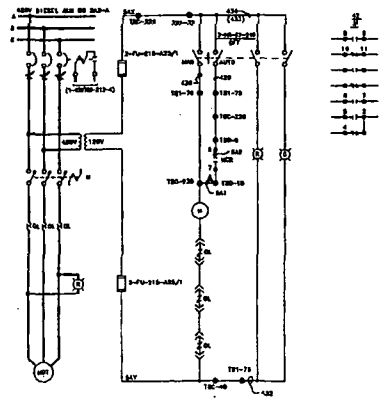

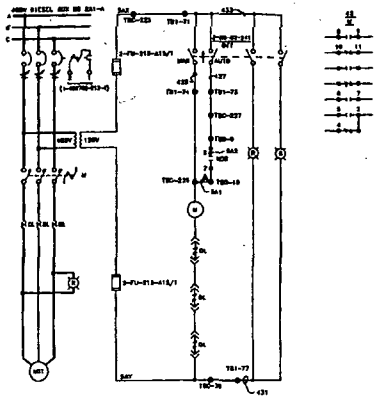

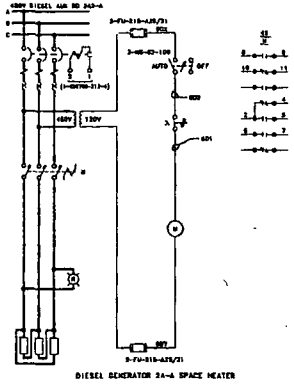

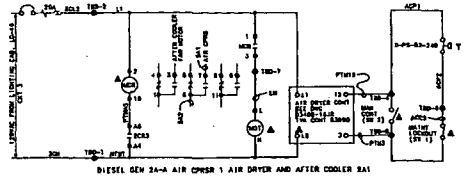

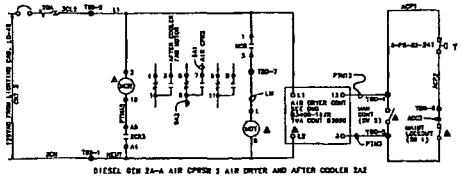

Amendment 89

WATTS BAR
FINAL SAFETY
ANALYSIS REPORT

DIESEL GENERATOR BUILDING
UNIT 1
WIRING DIAGRAM
STBY DIESEL GEN SYS
SCHEM DIAG DG 2A-A
TVA DWG NO. 1-45W760-82-10B R1
FIGURE 8.3-34B

Figure 8.3-34b Diesel Generator Building Unit 1 Wiring Diagram Standby Dsl. Gen. Sys. Schematic Diagram (OG 2A-A)

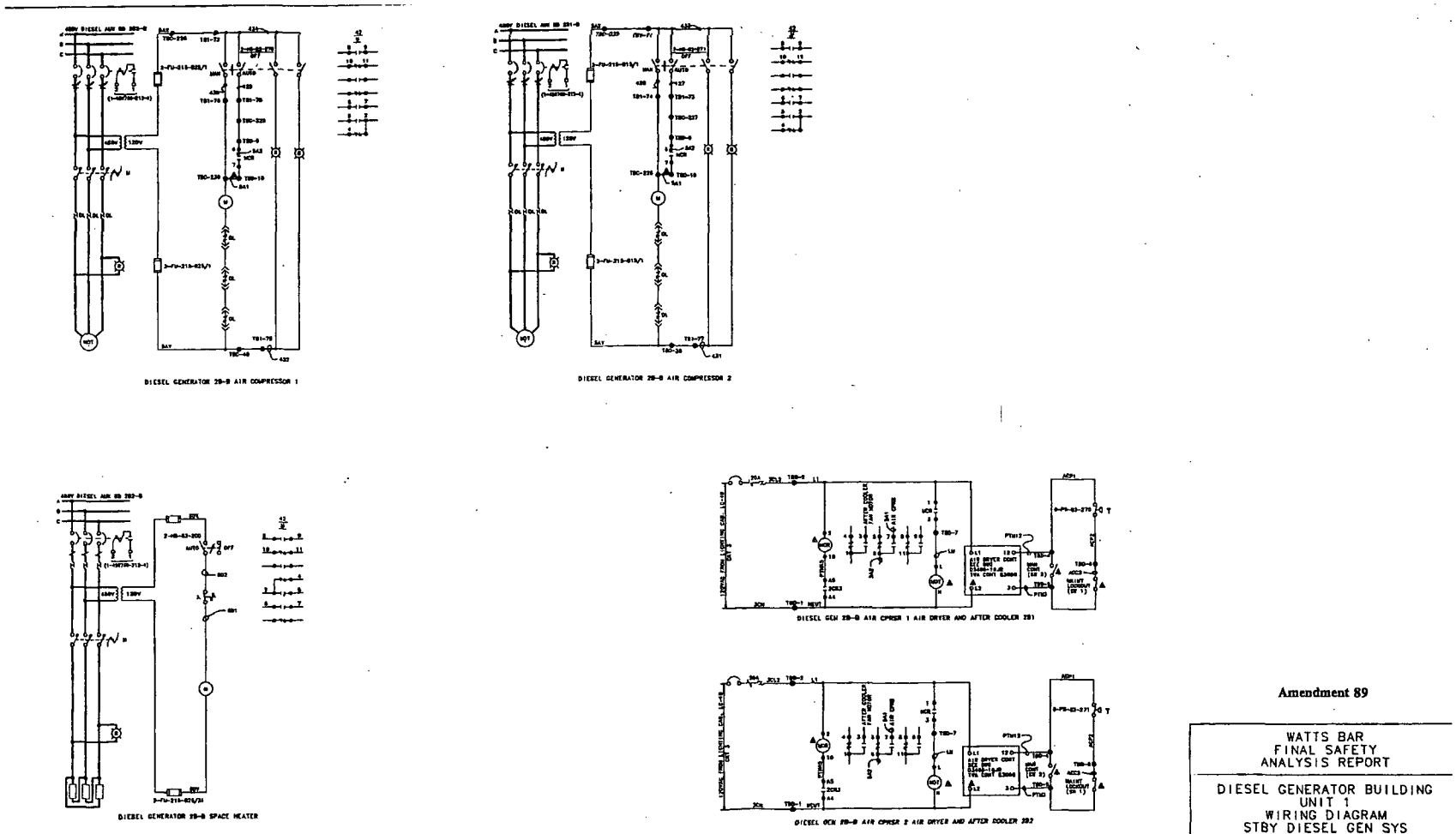

Amendment 89

WATTS BAR
FINAL SAFETY
ANALYSIS REPORT

DIESEL GENERATOR BUILDING
UNIT 1
WIRING DIAGRAM
STBY DIESEL GEN SYS
SCHEM DIAG DG 2B-B
TVA DWG NO. 1-45W760-82-10C R1
FIGURE 8.3-34C

Figure 8.3-34c Diesel Generator Building Unit 1 Wiring Diagram Standby Dsl. Gen. Sys. Schematic Diagram (DG 2B-B)

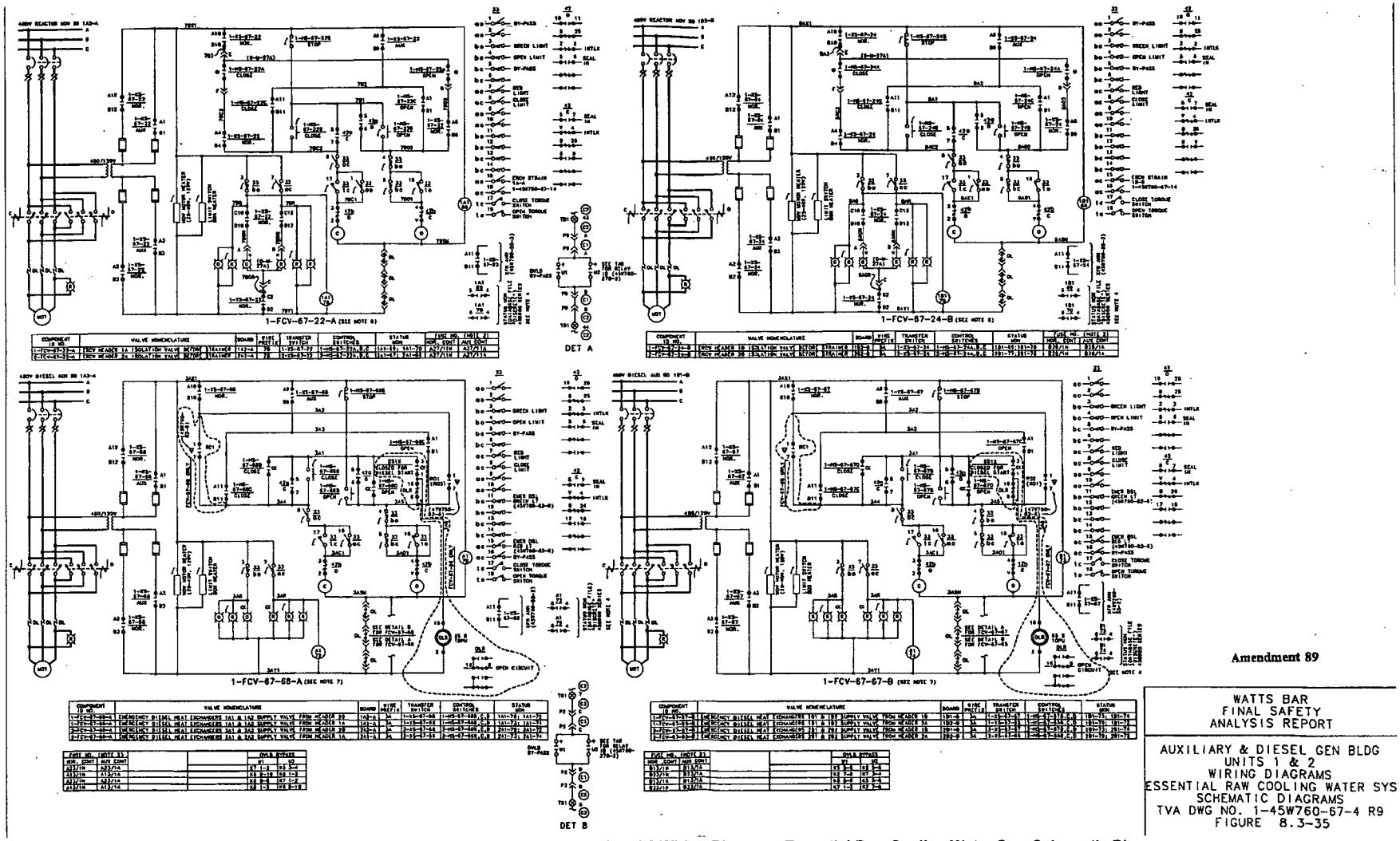

Amendment 89

WATTS BAR
FINAL SAFETY
ANALYSIS REPORT

AUXILIARY & DIESEL GEN BLDG
UNITS 1 & 2
WIRING DIAGRAMS
ESSENTIAL RAW COOLING WATER SYS
SCHEMATIC DIAGRAMS
TVA DWG NO. 1-45W760-67-4 R9
FIGURE 8.3-35

Figure 8.3-35 Auxiliary and Diesel Gen. Bldg. Units 1 and 2 Wiring Diagrams Essential Raw Cooling Water Sys. Schematic Diagram

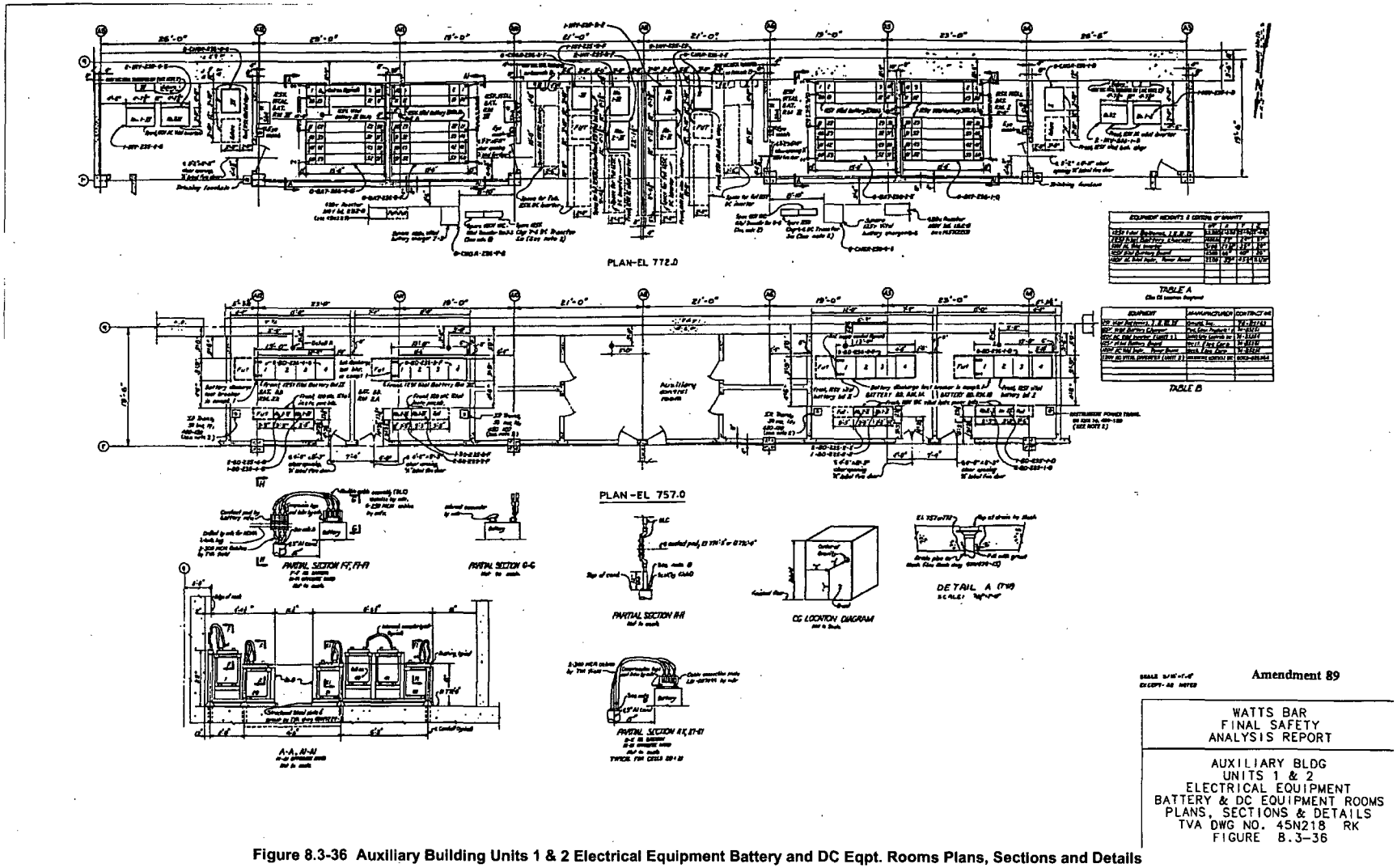

Figure 8.3-36 Auxiliary Building Units 1 & 2 Electrical Equipment Battery and DC Eqpt. Rooms Plans, Sections and Details

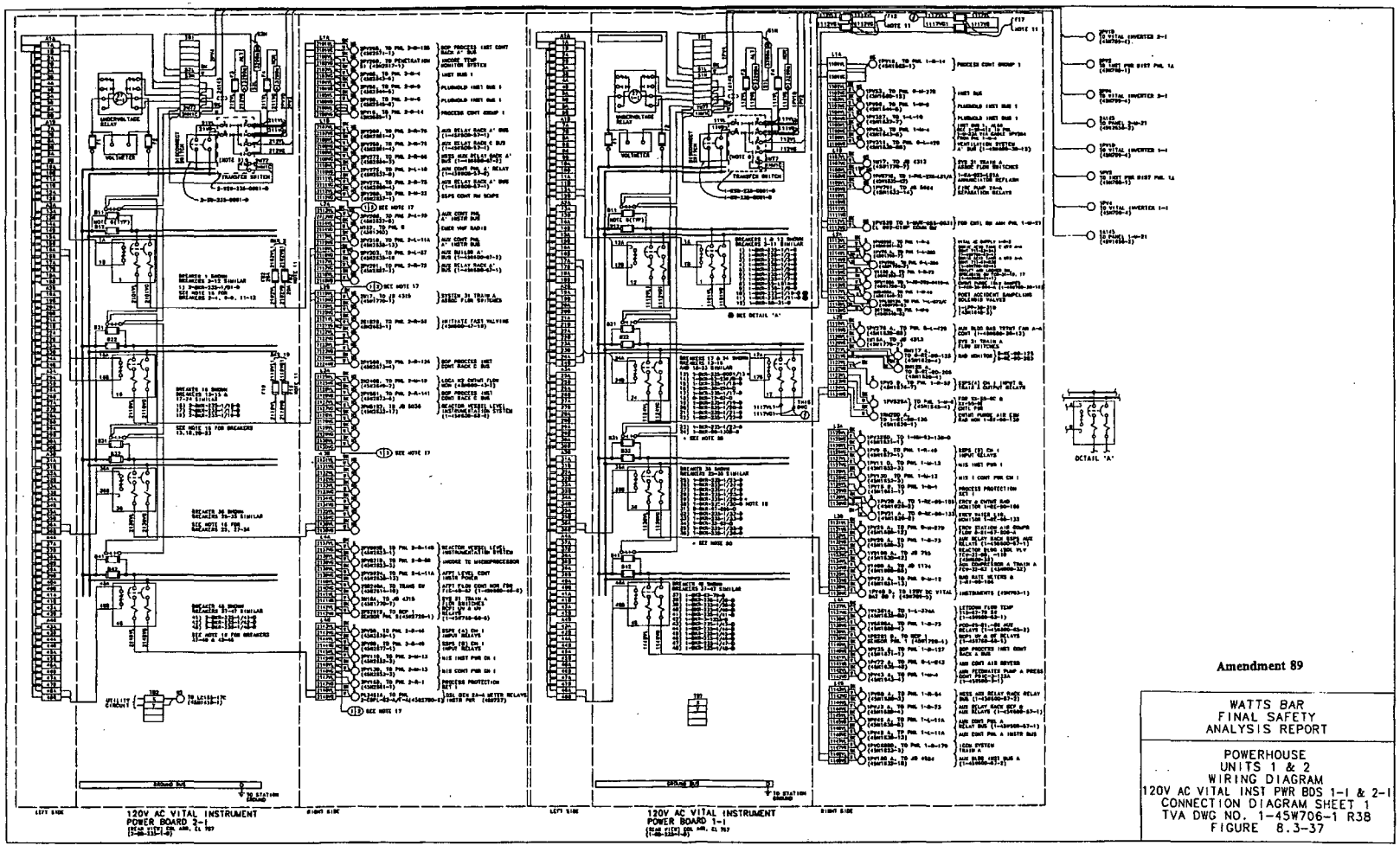

Figure 8.3-37 Powerhouse Units I and 2 Wiring Diagram I20V A.C. Vital Inst. Pwr. BDS I-I and 2-1 Connection Diagram -Sheet I

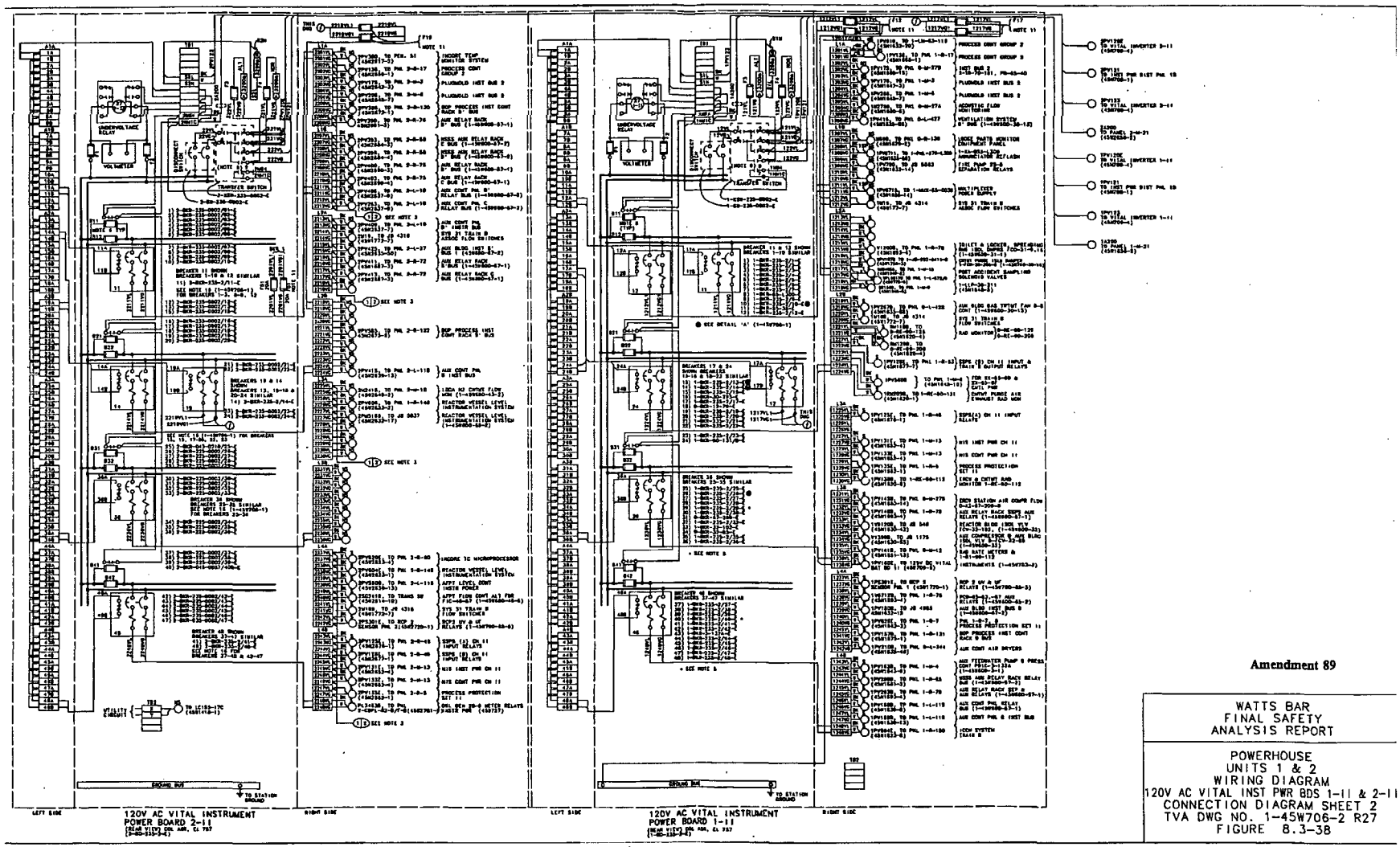

Figure 8.3-38 Powerhouse Units 1 and 2 Wiring Diagram 120V AC Vital Inst. Pwr. BDS I-II and 2-11 Connection Diagram -Sheet 2

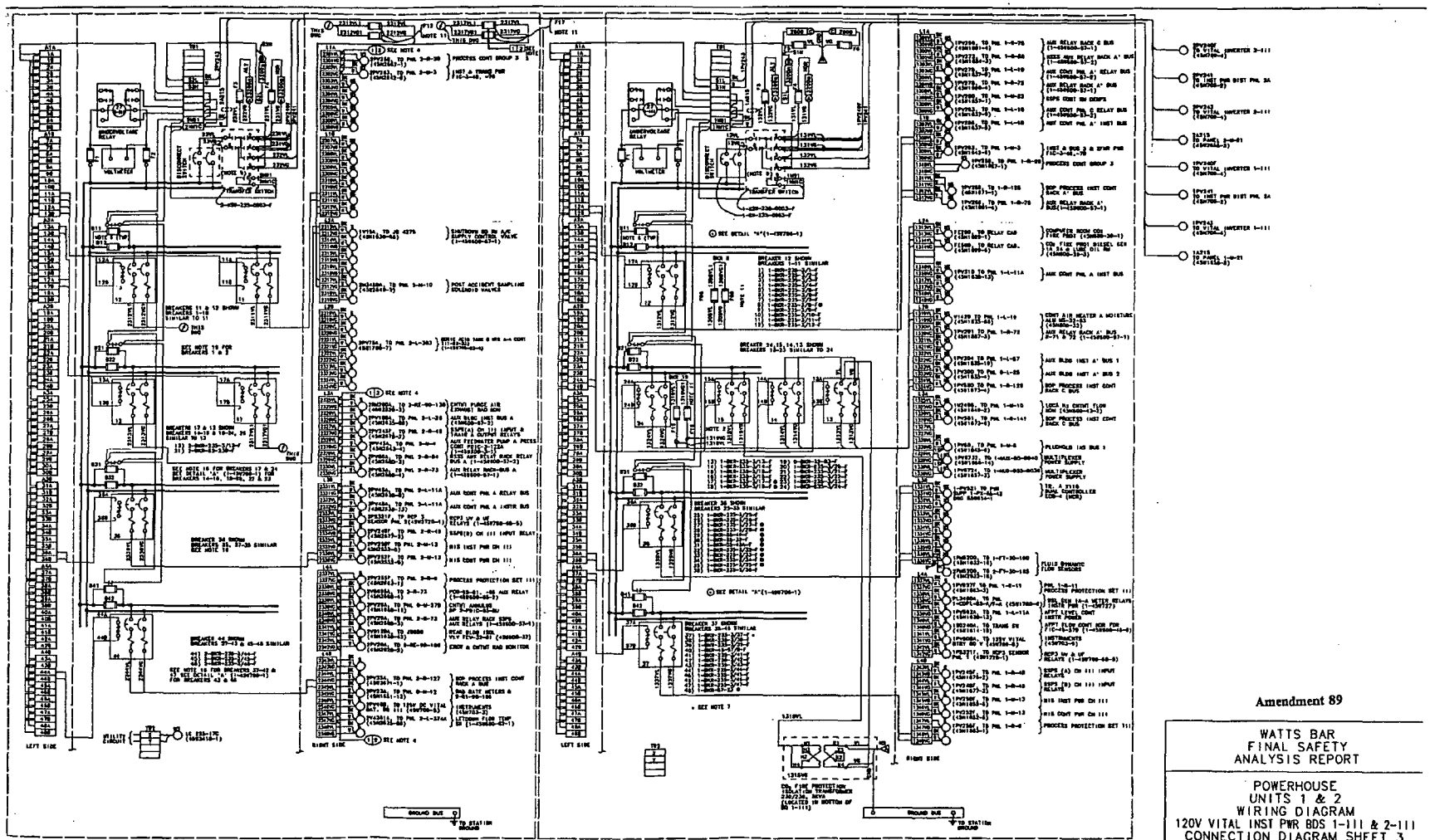

Amendment 89

WATTS BAR
FINAL SAFETY
ANALYSIS REPORT

POWERHOUSE
UNITS 1 & 2
WIRING DIAGRAM
120V VITAL INST PWR BDS 1-III & 2-III
CONNECTION DIAGRAM SHEET 3
TVA DWG NO. 1-45W706-3 R16
FIGURE 8.3-39

Figure 8.3-39 Powerhouse Units 1 and 2 Wiring Diagram I20V Vital Inst. Pwr. BDS I-III and 2-111 Connection Diagrar Sheet 3

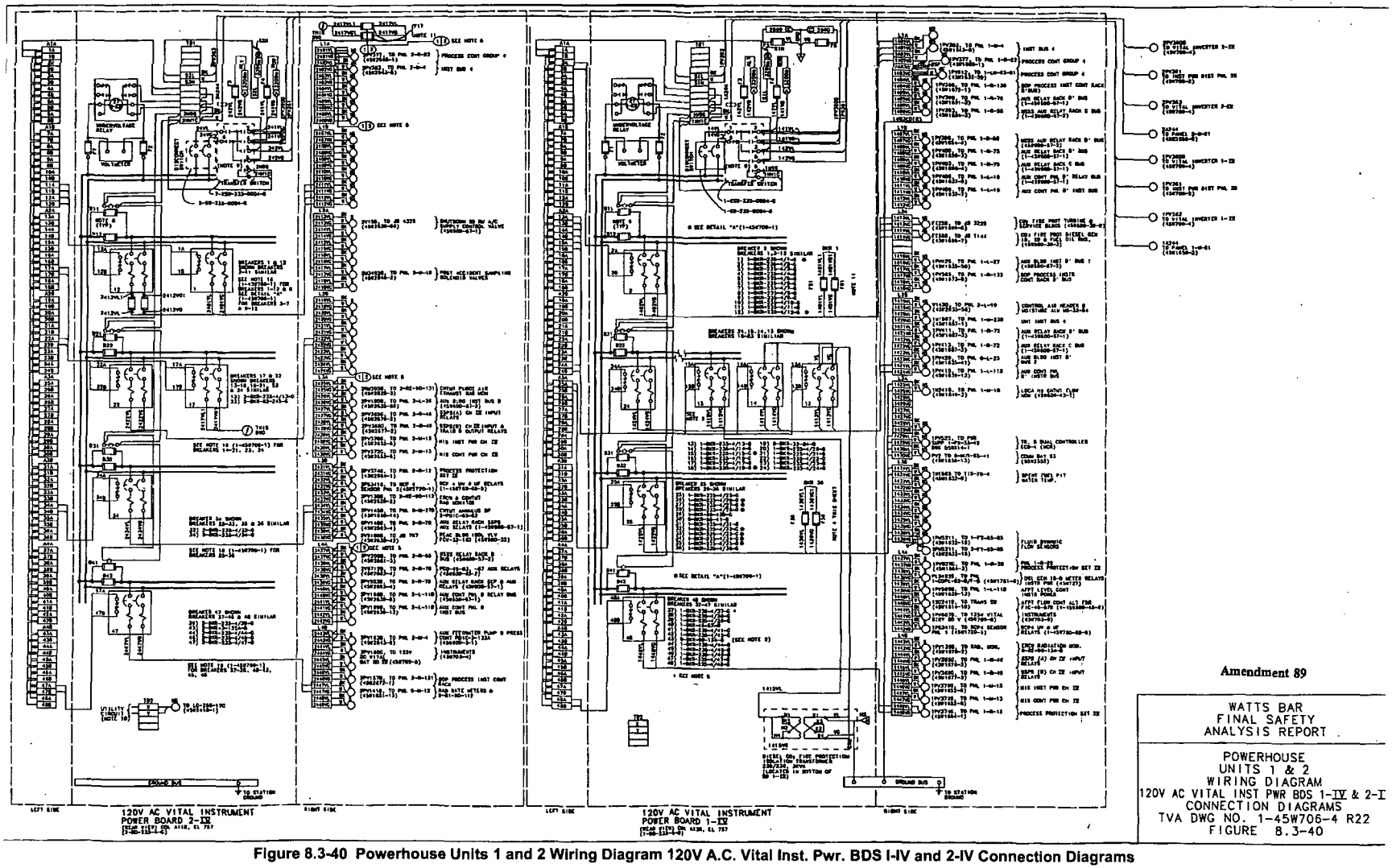

Figure 8.3-40 Powerhouse Units 1 and 2 Wiring Diagram 120V A.C. Vital Inst. Pwr. BDS I-IV and 2-IV Connection Diagrams

Figure 8.3-41 Deleted by Amendment 75

Figure 8.3-41a Deleted by Amendment 75

Figure 8.3-41b Deleted by Amendment 75

Figure 8.3-41c Deleted by Amendment 75

Figure 8.3-41d Deleted by Amendment 75

Figure 8.3-41e Deleted by Amendment 75

Figure 8.3-41f Deleted by Amendment 75

Figure 8.3-41g Deleted by Amendment 75

Figure 8.3-41h Deleted by Amendment 75

Figure 8.3-41i Deleted by Amendment 75

Figure 8.3-41j Deleted by Amendment 75

Figure 8.3-42 Deleted by Amendment 55

Figure 8.3-43 Deleted by Amendment 55

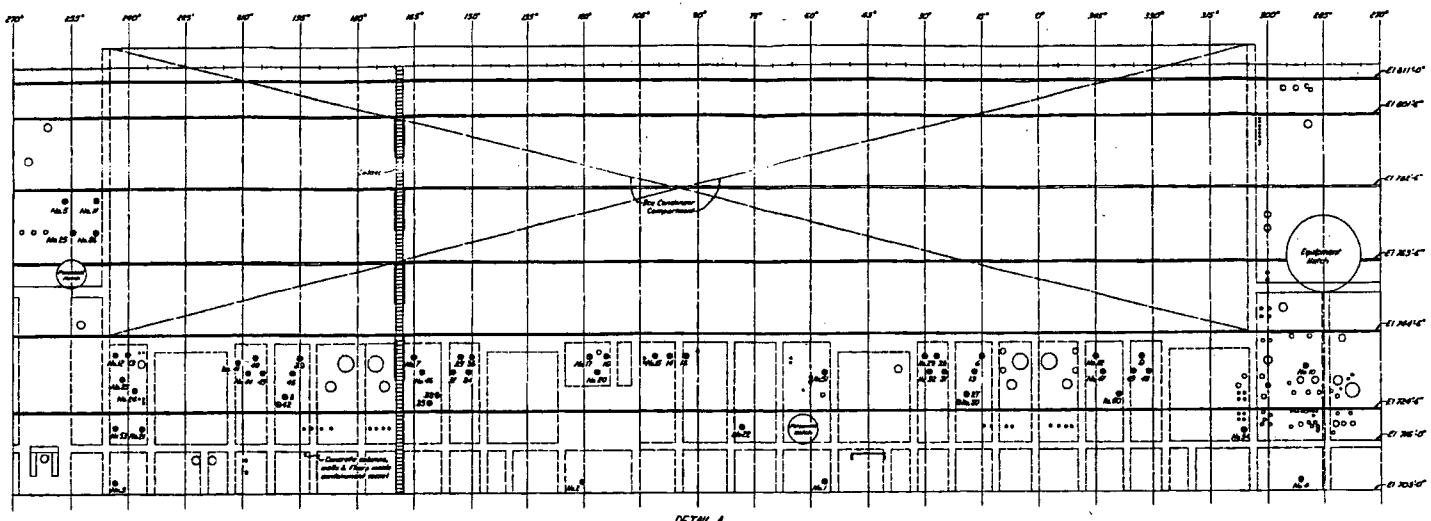

DETAIL A
DEVELOPED EXTERIOR ELEVATION
REACTOR CONTAINMENT BUILDING
FOR LOCATION OF ELECTRICAL PENETRATIONS ONLY

ELECTRICAL PENETRATION NUMBER	ELECTRICAL PENETRATION NUMBER	SLEEVE NUMBER	SLEEVE SIZE	NODE VOLTAGE LEVEL	ELEVATION	AZIMUTH	REMARKS
8391	1	1-1E1E	18"	5	705'-0"	56°-30'	RCP NO.1 NON-DIV
8392	2	1-1D1E	"	5	705'-0"	100°-30'	RCP NO.2 NON-DIV
8393	3	1-1C1E	"	5	705'-0"	143°-30'	RCP NO.3 NON-DIV
8394	4	1-1A1E	"	5	705'-0"	234°-30'	RCP NO.4 NON-DIV
8395	5	1-1B1E	"	4	719'-6"	292°-30'	480 V POWER B NON-DIV
8396	6	1-1A1E	"	4A	720'-6"	81°	480 V POWER A
8397	7	1-1B1E	"	4B	720'-6"	253°	480 V POWER B
8398	8	1-1A1E	"	4A	720'-6"	199°	480 V POWER A
8399	9	1-1B1E	"	4B	720'-6"	351°	480 V POWER B
8400	10	1-1A1E	18"	3	725'-6"	236°	CONTROL NON-DIV
8401	11	1-1B1E	18"	4	729'-6"	248°-30'	480 V POWER NON-DIV.
8403	12	1-1A1E	"	4	733'-6"	243°-30'	CONTROL ROD DRIVE POWER
8403	13	1-1B1E	"	4	733'-6"	140°	CONTROL ROD DRIVE POWER
8404	14	1-1A1E	12"	4A	738'-6"	39°	480 V POWER A
8405	15	1-1B1E	"	4A	738'-6"	101°	480 V POWER A
8406	16	1-1A1E	"	4B	738'-6"	151°	480 V POWER B
8407	17	1-1B1E	"	4B	738'-6"	198°-30'	480 V POWER B
8408	18	1-1A1E	"	1	738'-6"	22°	LOW LEVEL NON-DIV
8409	19	1-1B1E	"	2E	744'-6"	17°	PROCESS INST. PROTECTION
8410	20	1-1A1E	"	2	744'-6"	44°-30'	PROCESS INSTRUMENTATION
8411	21	1-1B1E	"	4A	720'-0"	234°-30'	480 V POWER A
8412	22	1-1A1E	"	2	720'-0"	39°-30'	INCORE INSTRUMENTATION
8413	23	1-1B1E	"	2E	733'-0"	201°-30'	SEES CHANNEL II
8414	24	1-1A1E	"	4	733'-0"	248°-30'	480 V POWER NON-DIV
8415	25	1-1B1E	"	2	771'-6"	234°-30'	CONTROL ROD POS DETECTION
8416	26	1-1A1E	"	4	737'-6"	248°-30'	CONTROL ROD DRIVE POWER
8417	27	1-1A1E	"	3A	738'-6"	23°	CONTROL A
8418	28	1-1B1E	"	3	738'-6"	27°	PROCESS INST. CONTROL
8419	29	1-1B1E	"	1	738'-6"	30°	LOW LEVEL NON-DIV

ELECTRICAL PENETRATION NUMBER	ELECTRICAL PENETRATION NUMBER	SLEEVE NUMBER	SLEEVE SIZE	NODE VOLTAGE LEVEL	ELEVATION	AZIMUTH	REMARKS	ELECTRICAL PENETRATION NUMBER
30	1-1B1E	18"	2B	738'-6"	21°	ANNUNCIATION & COMM		8420
31	1-1A1E	"	2A	734'-6"	25°	SEES CHANNEL II		8421
32	1-1B1E	"	4	734'-6"	69°	480 V POWER NON-DIV		8422
33	1-1B1E	"	1	738'-6"	83°	LOW LEVEL NON-DIV.		8423
34	1-1A1E	"	2	738'-6"	70°	PROCESS INST. CONTROL		8424
35	1-1B1E	"	4	738'-6"	107°	480 V POWER NON-DIV		8425
36	1-1B1E	"	3B	738'-6"	150°	CONTROL B		8426
37	1-1A1E	"	2A	734'-6"	203°	ANNUNCIATION		8427
38	1-1B1E	"	2D	738'-6"	209°	PROCESS INST. PROTECTION		8428
39	1-1C1E	"	2	738'-6"	193°	PROCESS INST. CONTROL		8429
40	1-1C1E	"	2A	738'-6"	203°	ANNUNCIATION & COMM		8430
41	1-1C1E	"	4	737'-6"	217°	480 V POWER NON-DIV.		8431
42	1-1C1E	"	—	726'-6"	209°	SPARE		
43	1-1C1E	"	2D	734'-6"	229°	SEES CHANNEL II		8432
44	1-1C1E	"	3A	734'-6"	203°	CONTROL A		8433
45	1-1C1E	"	2F	734'-6"	193°	PROCESS INST. PROTECTION		8434
46	1-1C1E	"	3	734'-6"	163°	CONTROL NON-DIV.		8435
47	1-1C1E	"	4	734'-6"	140°	480 V POWER NON-DIV.		8436
48	1-1C1E	"	3	734'-6"	33°	CONTROL NON-DIV		8437
49	1-1C1E	"	2G	734'-6"	123°	PROCESS INST. PROTECTION		8438
50	1-1C1E	"	2	738'-6"	123°	PROCESS INST. CONTROL		8439
51	1-1D1E	18"	3	733'-9"	324°-30'	CONTROL NON-DIV		8440
52	1-1D1E	"	3B	738'-6"	343°	CONTROL B		8441
53	1-1D1E	"	3	740'-0"	243°-30'	CONTROL NON-DIV		8442
54	1-1D1E	12"	2E	719'-0"	306°-30'	SEES CHANNEL II		8443

NOTES:

A. NODE VOLTAGE LEVELS 1,2,3,4,5 - NON-DIVISIONAL
NODE VOLTAGE LEVELS 6A,6B,6C,6D - CHANNELS I,II,III,IV
NODE VOLTAGE LEVELS 3A,4A - TRAIN A
NODE VOLTAGE LEVELS 3B,4B - TRAIN B

B. FOR CABLE CONNECTIONS TO ELECTRICAL PENETRATIONS SEE DRAWING 2232L1 4B8860. THE PENETRATION NUMBER AND DRAWING SHEET NUMBER ARE THE SAME. (PENETRATION 23 SEE 4B8860-23, ETC.)

C. FOR MANUFACTURER INFORMATION ON ELECTRICAL PENETRATIONS, SEE CONAX CORPORATION DRAWINGS 7429-10000, 7429-10001, 7429-10002, & 7429-10003. (TVA CONTRACT NUMBER 78X61-87064).

D. FOR ELECTRICAL PENETRATIONS INSTALLATION PROCEDURE, SEE CONAX CORP. DOCUMENT TPS-214 - INSTALLATION AND MAINTENANCE MANUAL.

E. PENETRATIONS WITH CONNECTOR FEEDING CONFIGURATIONS DIFFERING FROM THE "AS BUILT" DRAWINGS PROVIDED BY THE VENDOR ARE DETAILED ON 4B8860-10.

K FIELD TO MODIFY CONAX CORP. SUPPLIED TERMINAL BOX INSIDE CONTAINMENT FOR PENETRATION NO. 10 AS FOLLOWS: INCREASE OUTSIDE DIMENSIONS OF BOX TO 20" HIGH X 8.0" WIDE X 6.5" DEEP.

L. FIELD TO FABRICATE BOLTS FOR INSIDE CONTAINMENT FOR PENETRATIONS 1, 2, 3, AND 4. SEE DETAIL ON DRAWING 4B8860-10, AND ELECTRICAL STANDARD DRAWINGS MANUAL, DRAWING 1.2.2.6.3-6.

M. MOUNT HANGER KIT FOR PENETRATION BOTTOM IN THE ANNULUS AND INSIDE CONTAINMENT, APPROXIMATE TO THE PENETRATION.

J. ON PENETRATION 5-1.1B1E, A WELD WAS FOUND TO BE DEFICIENT BY THE WELD EVALUATION PROJECT, EVALUATED BY WATTS BAR ENGINEERING PROJECT AND FOUND TO BE SUITABLE FOR SERVICE. SEE DESIGN CALCULATIONS FOR EVALUATION, DRAWING NO. 2232V-2-0017 13 AND PENETRATION 5-1.1B1E.

—SEE NOTE H(TYP)

SCALE 1/8"=1'-0"
COMPANION DRAWINGS
FSAR FIG 8.3-44

AMENDMENT 75

WATTS BAR
FINAL SAFETY
ANALYSIS REPORT

POWERHOUSE
REACTOR BUILDING - UNIT 1
CONDUIT & GROUNDING
FLOOR EL 702.78
DETAILS - SHEET 1
TVA DWG NO. 45N860-3 R8
FIGURE 8.3-44

Figure 8.3-44 Powerhouse Reactor Building -Unit 1 Conduit and Grounding Floor EL 702.78 Details -Sheet 1

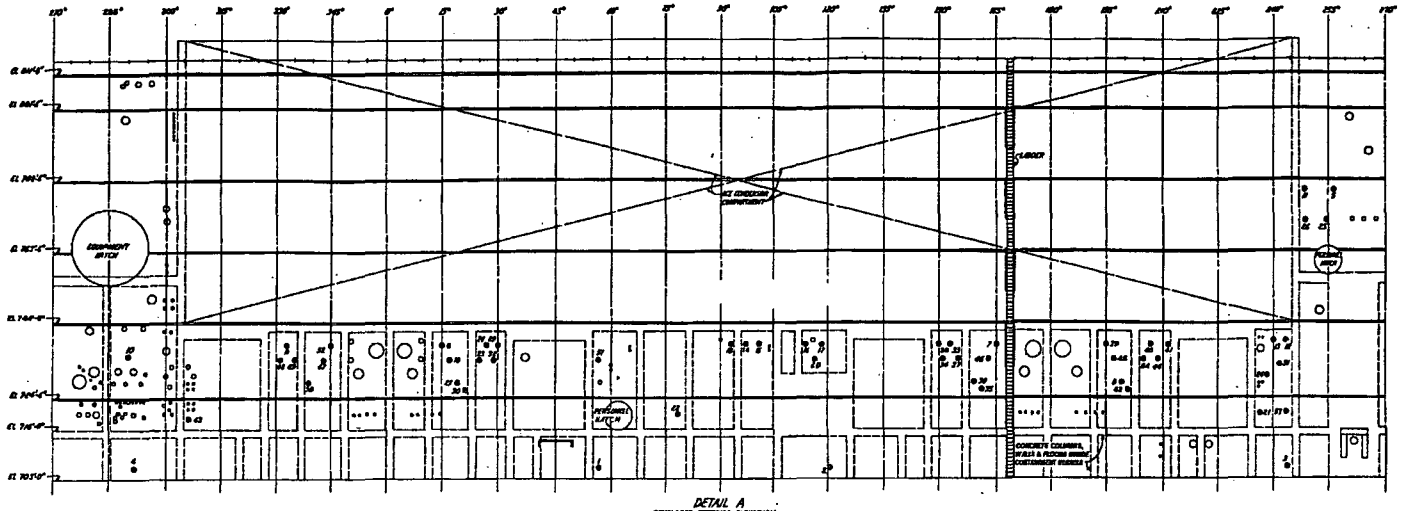

DETAIL A
DEVELOPED EXTERIOR ELEVATION
REACTOR CONTAINMENT WALL
FOR LOCATION OF ELECTRICAL PENETRATIONS ONLY

ELECTRICAL PENETRATIONS

ELECTRICAL PENETRATION NUMBER	SLEEVE NUMBER	SLEEVE SIZE	POWER CONDUIT LEVEL	ELEVATION	AZIMUTH	REMARKS	ELECTRICAL PENETRATION NAMEPLATE NUMBER
1	2-2-2-1	18"	3	702'-0"	324°30'	RCP NO. 1 NON-DIV	8444
2	2-1-2-1	"	3	700'-0"	410°30'	RCP NO. 2 NON-DIV	8445
3	2-4-2-1	"	3	696'-0"	247°30'	RCP NO. 3 NON-DIV	8446
4	2-3-2-1	"	3	703'-0"	134°30'	RCP NO. 4 NON-DIV	8447
5	2-2-2-2	"	3	702'-0"	324°30'	480 V POWER NON-DIV	8448
6	2-1-2-2	"	44	700'-0"	410°	480 V POWER A	8449
7	2-4-2-2	"	44	696'-0"	247°	480 V POWER B	8450
8	2-3-2-2	"	44	703'-0"	134°	480 V POWER A	8451
9	2-2-2-3	"	48	702'-0"	324°30'	480 V POWER B	8452
10	2-2-2-3	12"	3	703'-0"	324°	CONTROL NON-DIV	8453
11	2-1-2-3	18"	4	700'-0"	410°30'	480 V POWER NON-DIV	8454
12	2-2-2-4	"	4	702'-0"	324°30'	CONTROL ROD DRIVE POWER	8455
13	2-1-2-4	"	4	700'-0"	410°	CONTROL ROD DRIVE POWER	8456
14	2-2-2-5	12"	44	702'-0"	324°	480 V POWER A	8457
15	2-2-2-5	"	44	700'-0"	410°	480 V POWER A	8458
16	2-2-2-6	"	48	702'-0"	324°	480 V POWER B	8459
17	2-1-2-6	"	48	700'-0"	410°30'	480 V POWER B	8460
18	2-2-2-7	"	7	702'-0"	324°	LOW LEVEL NON-DIV	8461
19	2-2-2-8	"	EE	694'-0"	11°	PROCESS DIST PROTECTION	8462
20	2-1-2-8	"	8	704'-0"	324°30'	ENGINE INSTRUMENTATION	8463
21	2-2-2-9	"	44	704'-0"	324°30'	480 V POWER A	8464
22	2-1-2-9	"	8	700'-0"	410°30'	ENGINE INSTRUMENTATION	8465
23	2-4-2-9	"	28	700'-0"	247°30'	MSS CHANNEL II	8466
24	2-3-2-9	"	4	700'-0"	134°30'	480 V POWER NON-DIV	8467
25	2-3-2-9	"	2	704'-0"	134°30'	CONTROL ROD POS DETECTION	8468
26	2-1-2-2	"	4	704'-0"	410°30'	CONTROL ROD DRIVE POWER	8469
27	2-4-2-2	"	34	704'-0"	247°	CONTROL A	8470
28	2-4-2-2	"	2	704'-0"	247°	PROCESS DIST CONTROL	8471
29	2-3-2-2	"	7	704'-0"	134°	LOW LEVEL INSTRUMENTATION	8472

ELECTRICAL PENETRATIONS

ELECTRICAL PENETRATION NUMBER	SLEEVE NUMBER	SLEEVE SIZE	POWER CONDUIT LEVEL	ELEVATION	AZIMUTH	REMARKS	ELECTRICAL PENETRATION NAMEPLATE NUMBER
30	2-2-2-2	12"	18	704'-0"	11°	INSTRUMENTATION & COMMUNICATION	8473
31	2-2-2-2	"	27	704'-0"	11°	MSS CHANNEL II	8474
32	2-1-2-2	"	4	704'-0"	93°	480 V POWER NON-DIV	8475
33	2-2-2-2	"	7	704'-0"	11°	LOW LEVEL NON-DIV	8476
34	2-2-2-2	"	2	704'-0"	151°	PROCESS DIST CONTROL	8477
35	2-1-2-2	"	4	704'-0"	93°	480 V POWER NON-DIV	8478
36	2-2-2-2	"	28	704'-0"	151°	CONTROL A	8479
37	2-1-2-2	"	2A	704'-0"	93°	INSTRUMENTATION	8480
38	2-2-2-2	"	10	704'-0"	151°	PROCESS DIST PROTECTION	8481
39	2-2-2-2	"	2	704'-0"	151°	PROCESS DIST CONTROL	8482
40	2-2-2-2	"	2A	704'-0"	151°	INSTRUMENTATION & COMMUNICATION	8483
41	2-1-2-2	"	4	704'-0"	93°	480V POWER NON-DIV	8484
42	2-2-2-2	"	—	704'-0"	151°	SPARE	
43	2-2-2-2	"	28	704'-0"	151°	MSS CHANNEL II	8485
44	2-2-2-2	"	3A	704'-0"	151°	CONTROL A	8486
45	2-2-2-2	"	3B	704'-0"	151°	PROCESS DIST PROTECTION	8487
46	2-2-2-2	"	3	704'-0"	151°	CONTROL NON-DIV	8488
47	2-2-2-2	"	4	704'-0"	151°	480 V POWER NON-DIV	8489
48	2-2-2-2	"	3	704'-0"	151°	CONTROL NON-DIV	8490
49	2-2-2-2	"	EE	694'-0"	151°	PROCESS DIST PROTECTION	8491
50	2-2-2-2	"	2	704'-0"	151°	PROCESS DIST CONTROL	8492
51	2-1-2-2	18"	3	704'-0"	93°30'	CONTROL NON-DIV	8493
52	2-1-2-2	"	3B	704'-0"	93°	CONTROL B	8494
53	2-1-2-2	"	3	704'-0"	93°30'	CONTROL NON-DIV	8495
54	2-1-2-2	12"	28	704'-0"	93°30'	MSS CHANNEL II	8496

=SEE NOTE 8 (TYP)

Amendment 89

SCALE: 1/8"=1'-0"

WATTS BAR
FINAL SAFETY
ANALYSIS REPORT

POWERHOUSE
REACTOR BUILDING UNIT 2
CONDUIT & GROUNDING
EL. 702.78 DETAILS-SH 1
TVA DWG NO. 45W870-3 R9
FIGURE 8.3-45

Figure 8.3-45 Powerhouse Reactor Building Unit 2 Conduit and Grounding EL 702.78 Details -Sheet 1

Sensitive
Figure 8.3-46 redacted under 10CFR 2.390

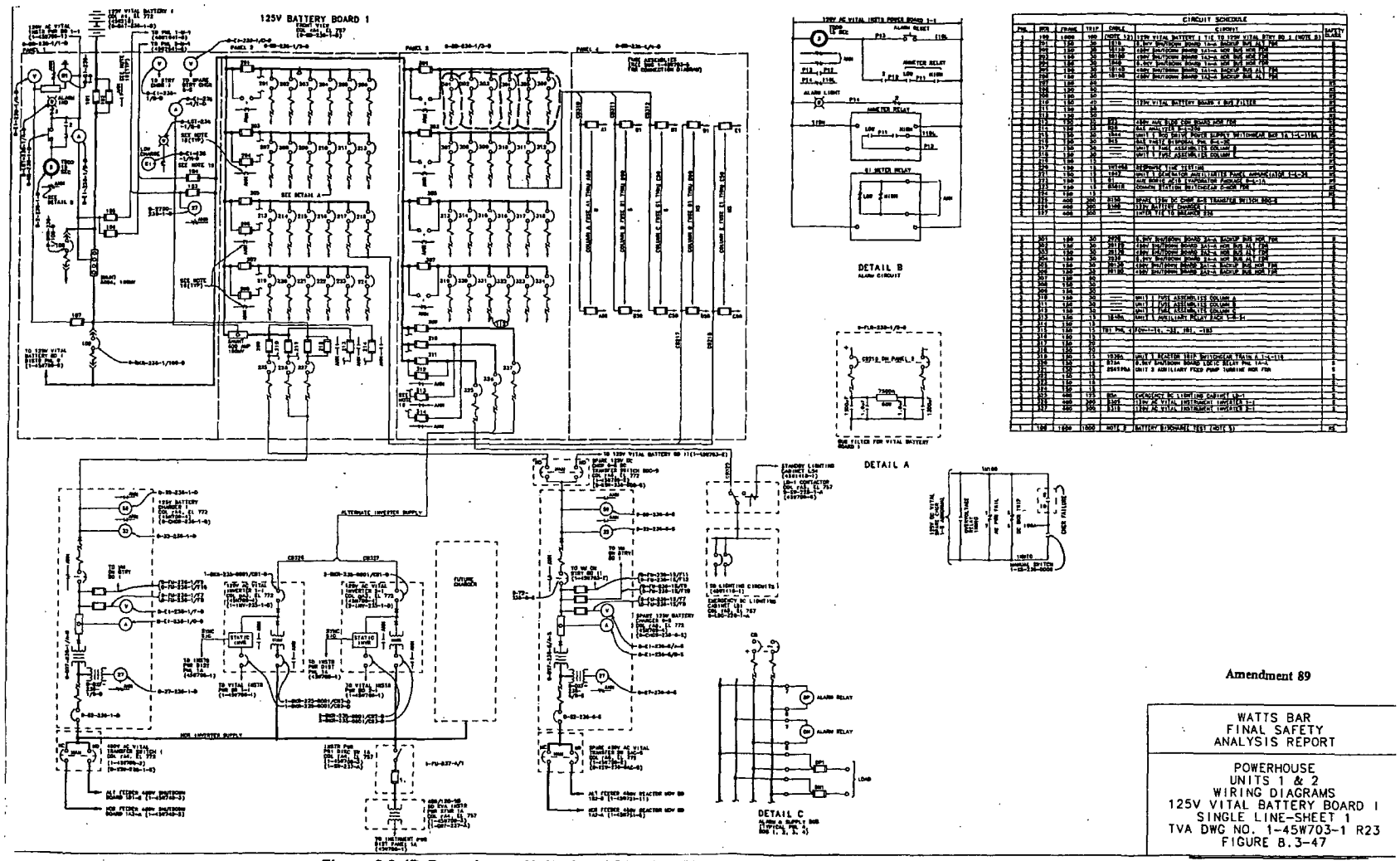

Figure 8.3-47 Powerhouse Units 1 and 2 Wiring Diagrams I25V Vital Battery BD I Single Line - Sheet 1

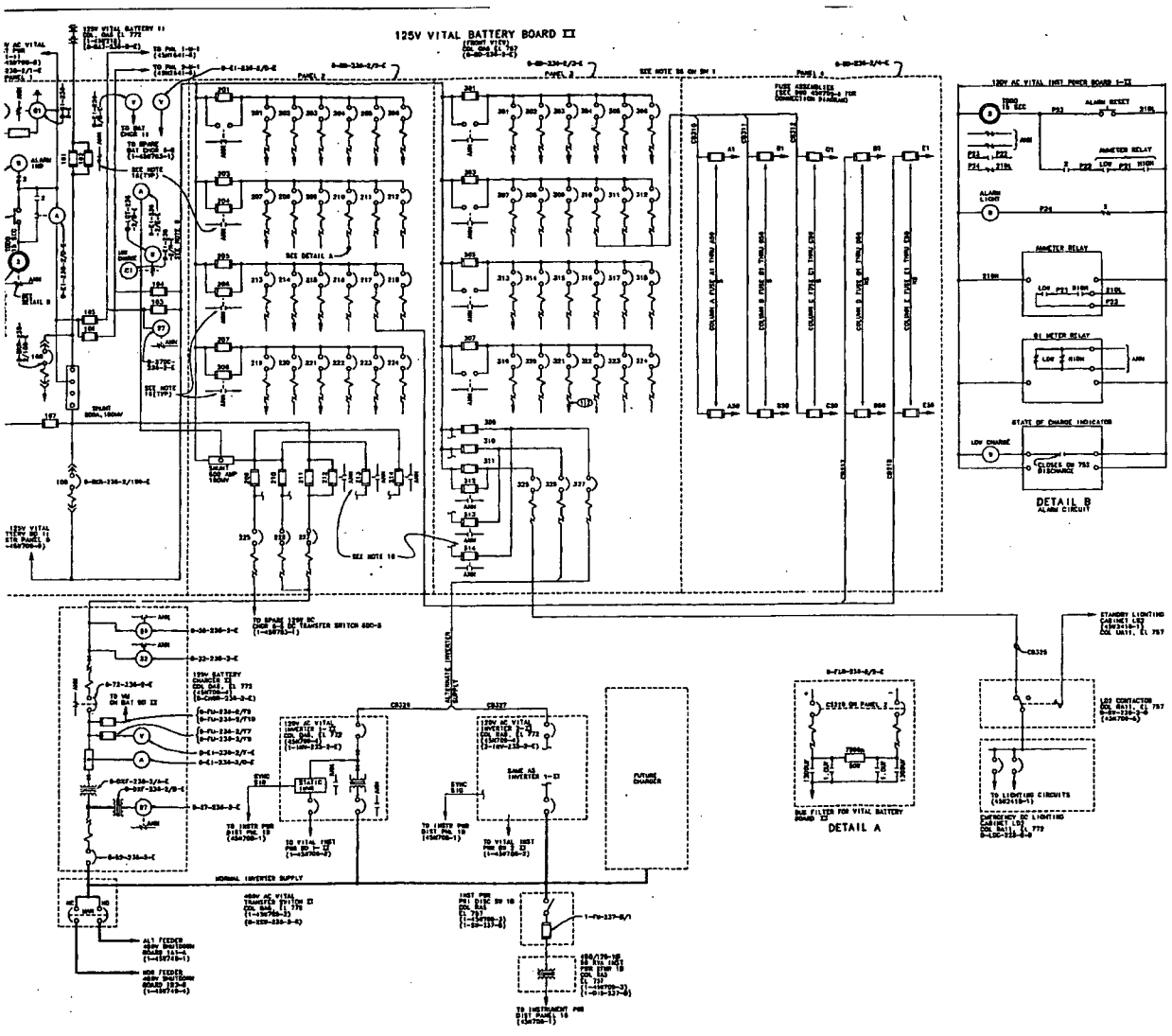

CIRCUIT SCHEDULE							
PNL	BRK	FRAME	TRIP	CABLE	CIRCUIT	BATTERY CLASS
1	104	400	1600	(NOTE 2)	125V VITAL BATTERY II TIE TO 125V VITAL BAT BD II (UNIT 2)	
1	201	150	50	1891	6.9KV SHUTDOWN BOARD 1B-B B/U BUS ALT FDR	5
1	202	150	50	18254	480V SHUTDOWN BOARD 1B1-B NOR BUS NOR FDR	5
1	203	150	50	18302	480V SHUTDOWN BOARD 1B2-B NOR BUS NOR FDR	5
1	204	150	50	1891	6.9KV SHUTDOWN BOARD 1A-A NOR BUS NOR FDR	5
1	205	150	50	18278	480V SHUTDOWN BOARD 1B1-B BACKUP BUS ALT FDR	5
1	206	150	50	18330	480V SHUTDOWN BOARD 1B2-B BACKUP BUS ALT FDR	5
1	207	150	50	895	ELECTRIC TEST MEDIA	NS
1	208	150	50			NS
1	209	150	50			NS
1	210	150	40	-	125V VITAL BATTERY BOARD II BUS FILTER	NS
1	211	150	50			NS
1	212	150	50			NS
1	213	150	50			NS
1	214	150	50	848	WASTE DISPOSAL PANEL 0-1-28	NS
1	215	150	50	1845	UNIT 1 RCP DRIVE POWER SUPPLY SWITCHGEAR BAR 1B 1-L-1138	NS
1	216	150	50			NS
1	217	150	50	-	UNIT 1 FUSE ASSEMBLIES COLUMN B	NS
1	218	150	50	-	UNIT 1 FUSE ASSEMBLIES COLUMN D	NS
1	219	150	15	10920	UNIT 1 BLOWDOWN SPILLOVER TO CONDENSER	NS
1	220	150	15			NS
1	221	150	15	853	COMMON CONTROL AND SERVICE AIR COMPRESSORS-NOR FDR	NS
1	222	150	15			NS
1	223	150	15	8363P	COMMON STATION SWITCHGEAR B-NOR FDR	NS
1	224	150	15			NS
1	225	400	300	8144	SPARE 125V DC CHARGER A-B TRANSFER SWITCH 600-B	4
1	226	400	200	8314	125V BATTERY CHARGER II	5
1	227	400	300		INTER TIE TO BREAKER 226	
2	301	150	50	2871	6.9KV SHUTDOWN BOARD 2A-A B/U BUS NOR FDR	5
2	302	150	50	18254	480V SHUTDOWN BOARD 2B1-B NOR BUS ALT FDR	5
2	303	150	50	18331	480V SHUTDOWN BOARD 2B2-B NOR BUS ALT FDR	5
2	304	150	50	7866	6.9KV SHUTDOWN BOARD 2A-A NOR BUS NOR FDR	5
2	305	150	50	18277	480V SHUTDOWN BOARD 2B1-B BACKUP BUS NOR FDR	5
2	306	150	50	18331	480V SHUTDOWN BOARD 2B2-B BACKUP BUS NOR FDR	5
2	307	150	50			5
2	308	150	50			5
2	309	150	50			5
2	310	150	50	-	UNIT 1 FUSE ASSEMBLIES COLUMN A	5
2	311	150	50	-	UNIT 1 FUSE ASSEMBLIES COLUMN B	5
2	312	150	50	-	UNIT 1 FUSE ASSEMBLIES COLUMN C	5
2	313	150	15	19-19	UNIT 1 AUXILIARY RELAY RACK 1-0-35	5
2	314	150	15			5
2	315	150	15	TBI Pnl. 4	PCV-1-7, -25, -192, 186	5
2	316	150	15			5
2	317	150	50			5
2	318	100	20			5
2	319	150	15	18278	UNIT 1 REACTOR TRIP SWITCH GEAR TRAIN B 1-L-116	5
2	320	150	15	8768	6.9KV SHUTDOWN BOARD LOGIC RELAY PNL 1B-B	5
2	321	150	15	2842218	UNIT 1 AUXILIARY FEED PUMP TURBINE ALT FDR	5
2	322	150	15			5
2	323	150	15			5
2	324	150	15			5
2	325	400	125	848	EMERGENCY DC LIGHTING CABINET 1B-B	5
2	326	400	300	8344	120 VAC VITAL INSTRUMENT INVERTER 2-II	5
2	327	400	300	8331	120 VAC VITAL INSTRUMENT INVERTER 2-II	5
	104	1850	1000	NOTE 3	BATTERY DISCHARGE TEST (NOTE 3)	NS

Amendment 89

WATTS BAR
FINAL SAFETY
ANALYSIS REPORT

POWERHOUSE
UNITS 1 & 2
WIRING DIAGRAMS
125V VITAL BATTERY BOARD II
SINGLE LINE-SHEET 2
TVA DWG NO. 1-45W703-2 R20
FIGURE 8.3-48

Figure 8.3-48 Powerhouse Units 1 and 2 Wiring Diagrams I25V Vital Battery BD I Single Line - Sheet 2

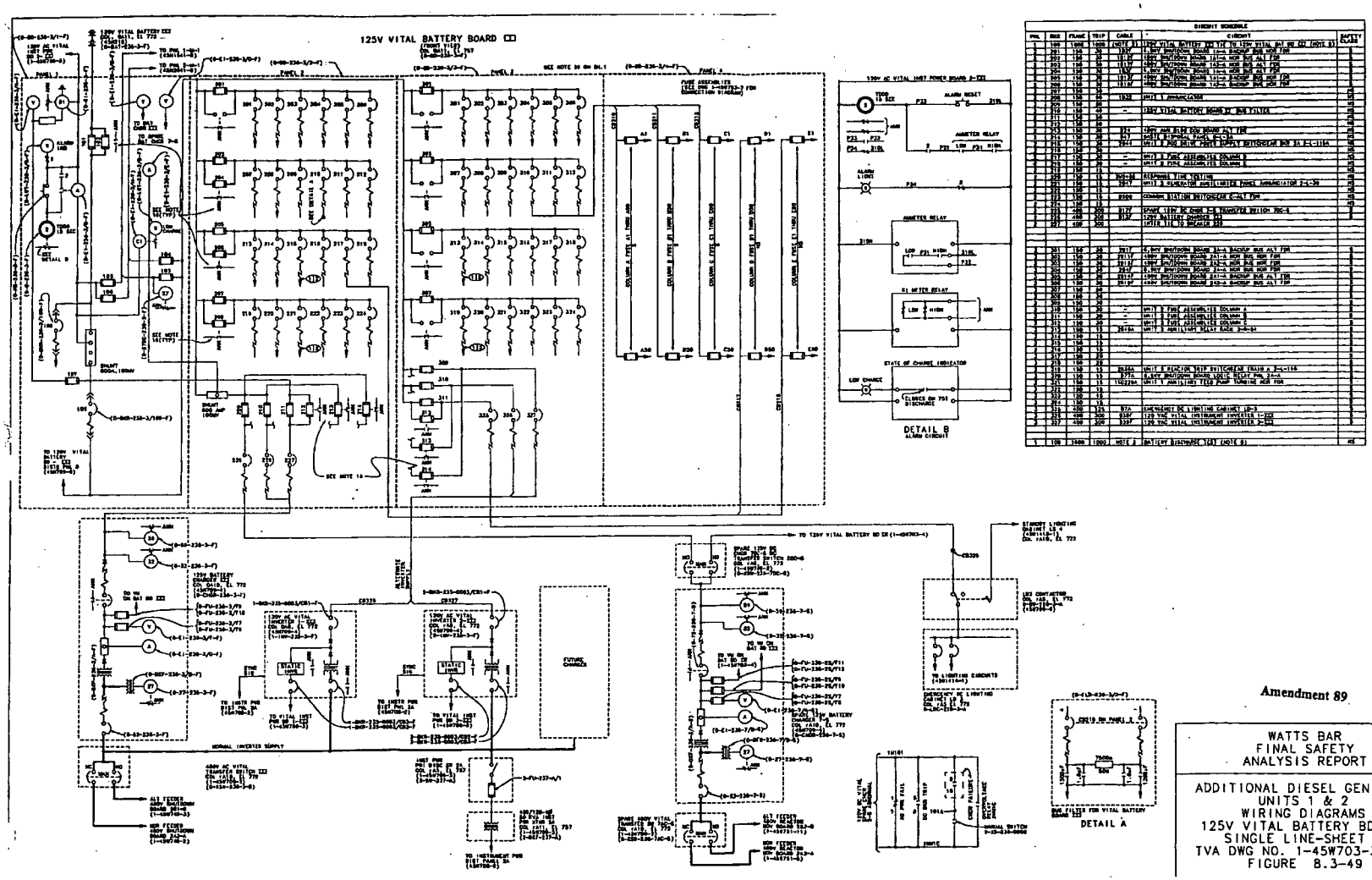

Amendment 89

WATTS BAR
FINAL SAFETY
ANALYSIS REPORT

ADDITIONAL DIESEL GEN BLDG
UNITS 1 & 2
WIRING DIAGRAMS
125V VITAL BATTERY BD III
SINGLE LINE-SHEET 3
TVA DWG NO. 1-45W703-3 R21
FIGURE 8.3-49

Figure 8.3-49 Additional Diesel Gen. Bldg. Units 1 and 2 Wiring Diagrams I25V Vital Battery BD III Single Line -Sheet 3

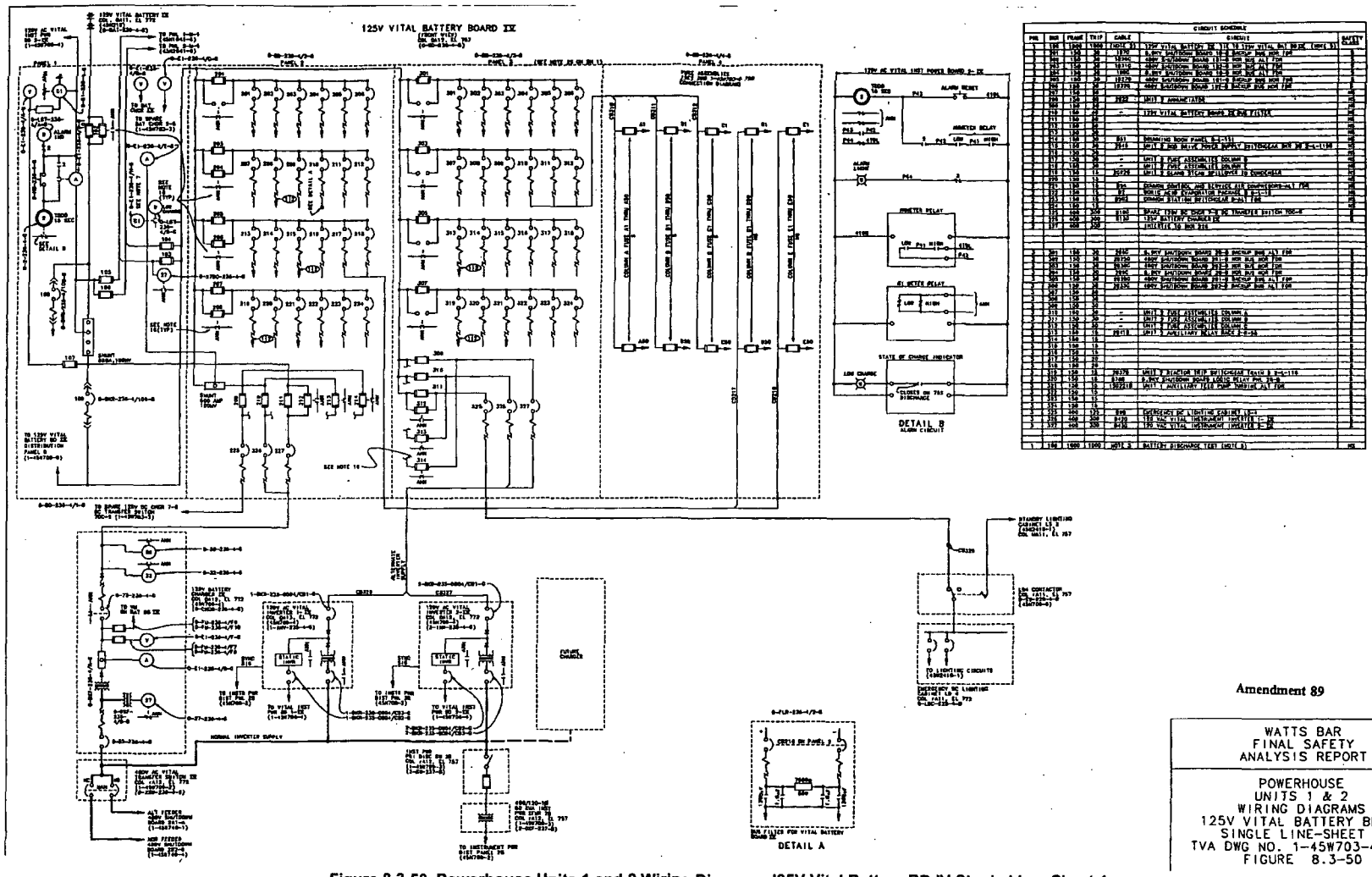

Amendment 89

WATTS BAR
FINAL SAFETY
ANALYSIS REPORT

POWERHOUSE
UNITS 1 & 2
WIRING DIAGRAMS
125V VITAL BATTERY BD IV
SINGLE LINE-SHEET 4
TVA DWG NO. 1-45W703-4 R16
FIGURE 8.3-50

Figure 8.3-50 Powerhouse Units 1 and 2 Wiring Diagrams I25V Vital Battery BD IV Single Line -Sheet 4

Figure 8.3-51 Deleted by Amendment 75

Figure 8.3-52 Deleted by Amendment 75

Figure 8.3-53 Deleted by Amendment 75

Figure 8.3-54 Deleted by Amendment 75

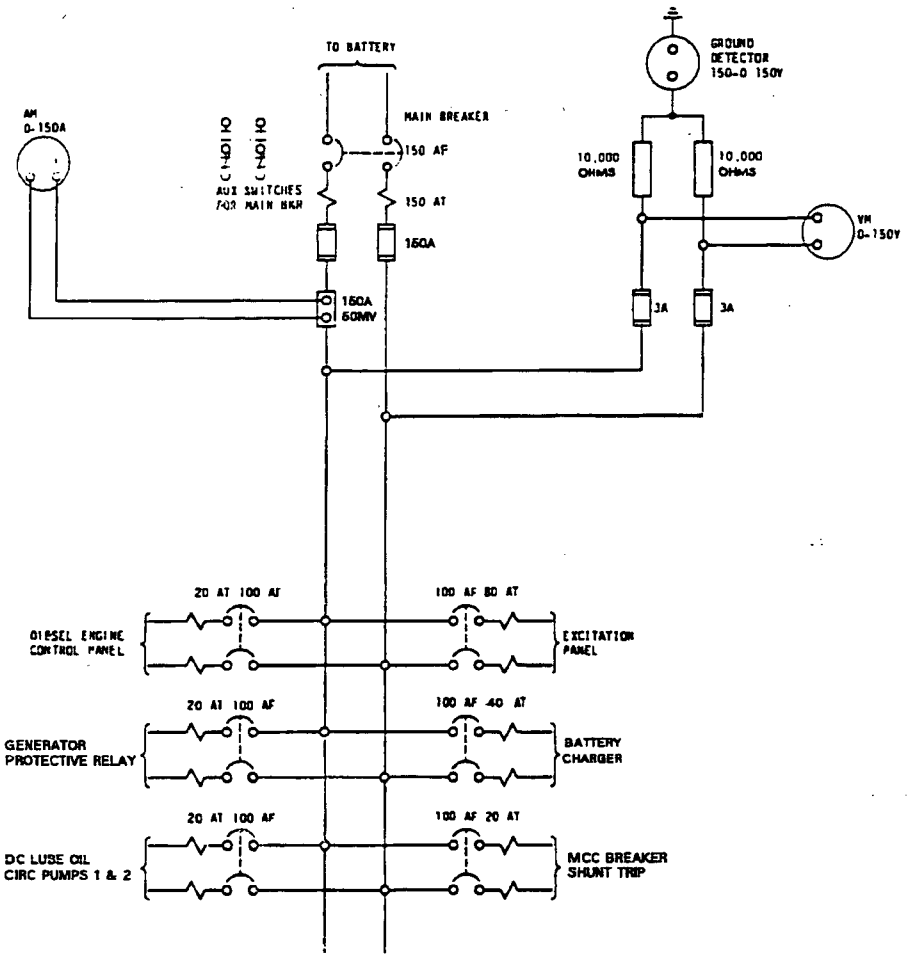

AMENDMENT 75

Figure 8.3-55 Schematic Diagram DC Distribution Panel

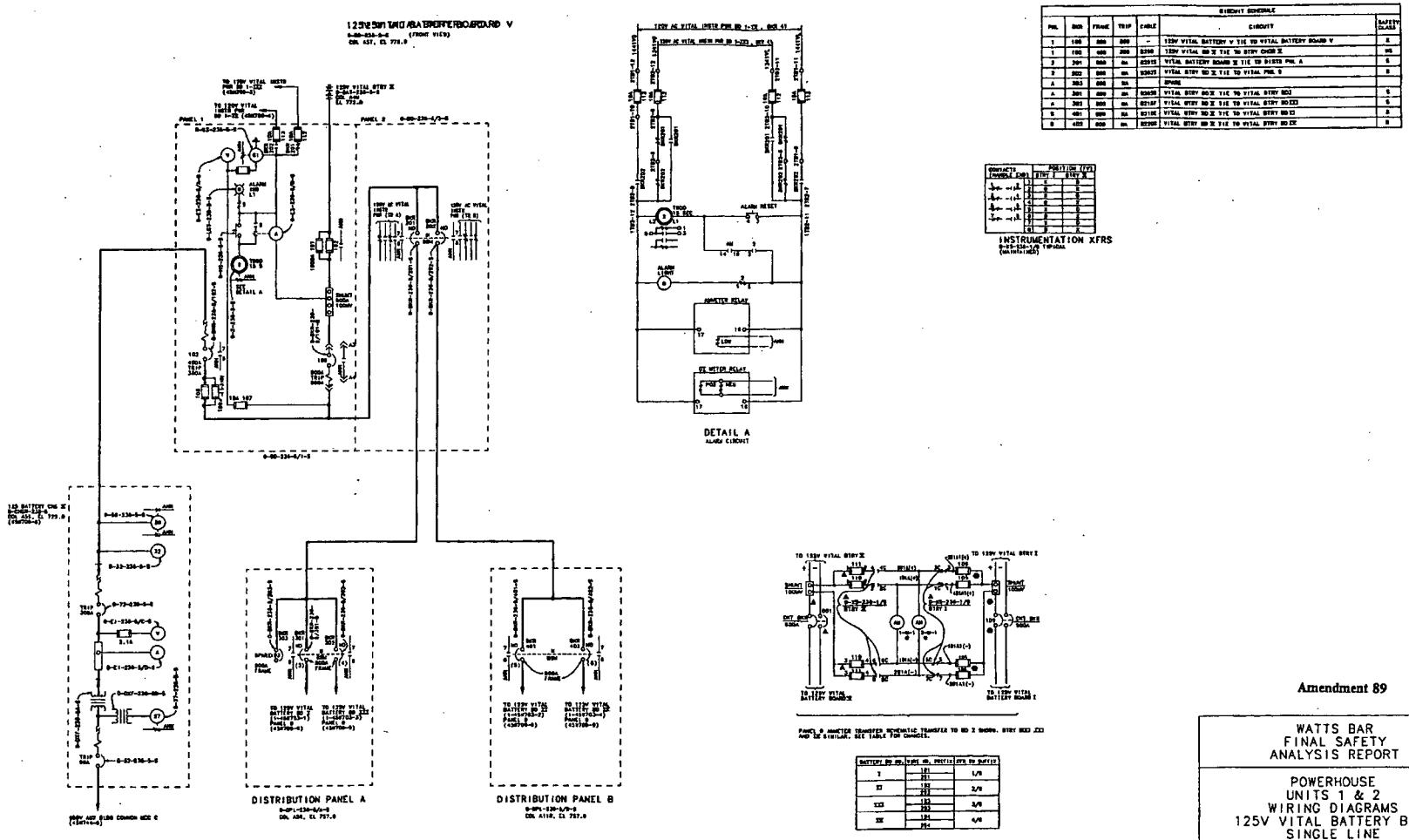

Figure 8.3-56 Powerhouse Units I and 2 Wiring Diagrams BD V Single Line 125V Vital Battery

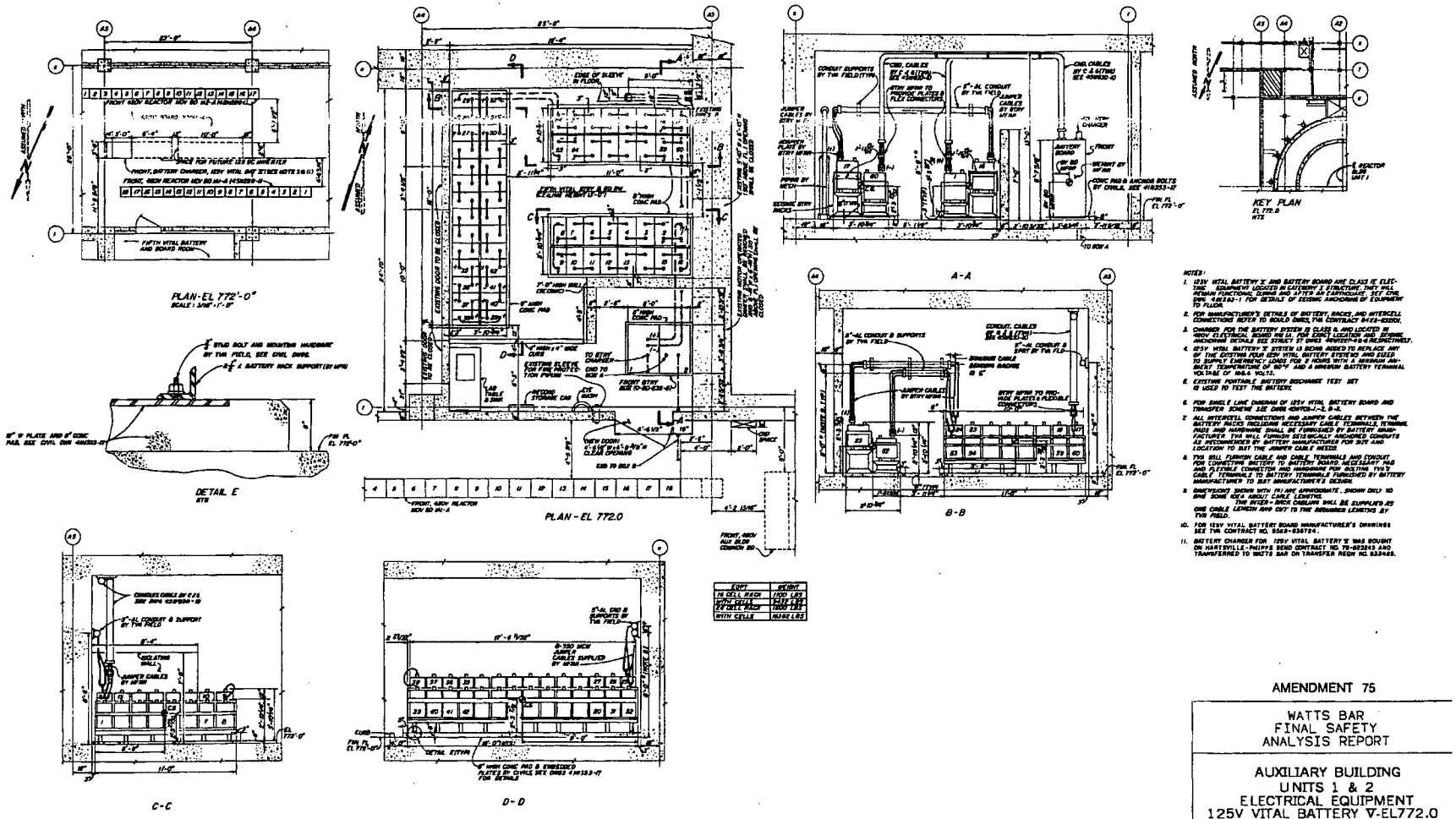

Figure 8.3-57 Auxiliary Building Units 1 & 2 Electrical Equipment I25V Vital Battery V-EL 772.0

SKETCH 2

SWITCHOVER CONFIGURATION FOR
ADDITIONAL DIESEL GENERATOR
6.9KV POWER

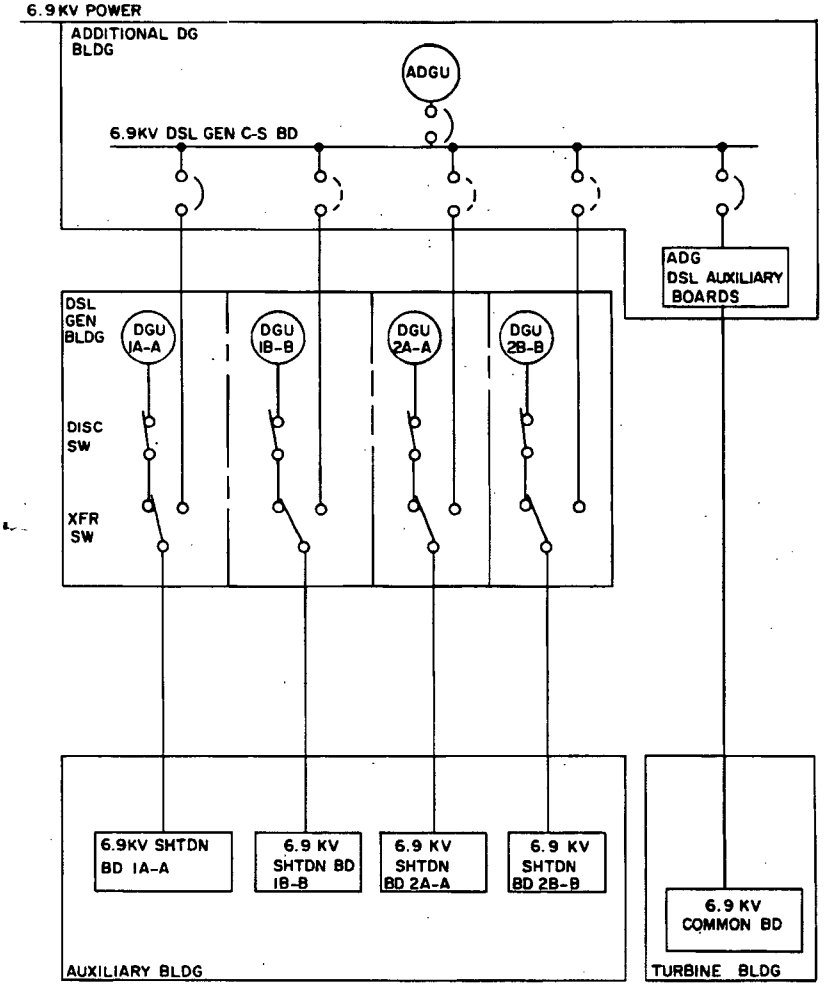

Figure 8.3-58 Switchover Configuration for Additional Diesel Generator 6.9kV Power

Sensitive
Figure 8.3-59 redacted under 10CFR 2.390

8A Analysis of Submerged Electrical Equipment (During Post LOCA) Powered from Auxiliary Power System

Purpose

The purpose of this analysis was to evaluate the response of the Class 1E Auxiliary Power System (APS) to the submergence and subsequent fault of electrical equipment inside the containment vessel during post-LOCA flooding. The effect of flooding on the non-Class 1E power system was not analyzed since its failure would not affect the Class 1E power system or any electric equipment required to mitigate the accident.

Assumptions

Conductivity of the water used in flooding the containment is sufficient that the magnitude of the leakage current is the maximum value of current that the protective device would carry for an indefinite period of time.

Reference

Letter from L. M. Mills (TVA) to Ms. E. Adensam (NRC), dated March 3, 1982, which included additional information concerning power systems at Watts Bar Nuclear Plant.

Procedure

The Class 1E devices of the APS located below the anticipated maximum flood level were identified. These devices were examined to determine if they would be tripped (deenergized) due to the plant's operating mode or if they would be energized and faulted due to flooding.

The following effects on the 1E auxiliary power system and boards due to the submersion of the energized devices were evaluated:

(1) Increased board loading due to leakage currents flowing thru the floodwater and the additional mechanical drag on rotating equipment due to flooding.

(2) Main circuit breaker trip settings.

(3) Board voltages supplying equipment required for safe shutdown during flooding of non-required equipment.

Analysis

To determine the effects of flooding on the auxiliary power buses/boards, the following actions were performed:

(a) The worst case full load current on the bus, excluding the submerged equipment, was determined.

(b) The maximum possible overload due to each submerged component was determined, e.g., the leakage current in a heater was considered to be equal to the upper trip limit of the protective device.

(c) The total bus current, including the effects of the submerged loads, was calculated and compared with the main breaker's tripping characteristics.

Conclusion

The post-LOCA flood will not cause breakers to trip out of sequence or degrade the 6900V ac or 480V ac voltage levels of the Class 1E Auxiliary Power System.

8B Analysis of Submerged Electrical Equipment (During Post LOCA) Powered from Instrumentation and Control Power System

Purpose

The purpose of this analysis was to evaluate the response of the Class 1E instrument and control (I&C) power system (125 volts dc and 120 volts ac) to the submergence and subsequent fault of certain electrical equipment inside containment during post-LOCA flooding.

Assumptions

(1) The conductivity of the post-LOCA flood water is sufficient that the magnitude of the leakage current is the maximum value of current that the protective device would carry for an indefinite period of time.

(2) 2.All components are submerged at the same time; therefore, the worst case condition will be imposed on the I&C power system.

(3) 3.Only the submerged I&C components powered from the Class 1E I&C power system were evaluated.

Reference

Letter from L. M. Mills (TVA) to Ms. E. Adensam (NRC), dated March 3, 1982, which included additional information concerning power systems at Watts Bar Nuclear Plant.

Method of Analysis

The devices that receive power from the Class 1E (I&C) power system and are located below the anticipated maximum flood level were identified. These devices were categorized into two groups:

(1) Components de-energized as a result of the safety injection signal.

(2) Components energized due to plant operating mode, accident and/or failure.

To determine the effects that the submerged I&C loads would have on the Class 1E I&C control power systems/boards, the following actions were performed:

(a) The worst case full load current on the board, excluding the leakage currents of the submerged components, was determined.

(b) The maximum possible leakage current for each submerged component was determined and added to the full load current above.

(c) The acceptability on the I&C system of the resultant bus/board loading with the submerged loads was determined.

(d) The trip settings of the main/supply breakers were compared with the loading to ensure that tripping does not occur and de-energize all connected loads.

Conclusion

The results of this analysis show that the submergence of the electrical components will not prevent the Class 1E 120V ac and 125V dc I&C power systems from performing their intended safety functions. The submergence of multiple components from the same power system will not exceed the Class 1E I&C power system's capacity rating. Any low impedence faults (short circuit) will be isolated by either the primary or backup protective devices without tripping the main breaker.

8C Deleted by Amendment 75

Deleted by Amendment 75

THIS PAGE INTENTIONALLY BLANK

8D IEEE STD 387-1984 FOR DIESEL-GENERATING UNITS APPLIED AS STANDBY POWER

SUPPLIES FOR NUCLEAR POWER GENERATING STATIONS

SECTION	DEGREE OF COMPLIANCE
5.1	WBN meets the intent of this section. However, 1E criteria meets IEEE 308-1974, and 1E qualification meets IEEE 323-1974.
5.2	Full compliance
5.3	Full compliance
5.4	Full compliance
5.5	Full compliance
6.1	Full compliance
6.2	WBN meets the intent of this section. The diesel generator factory production tests do not have the detailed requirements of IEEE 387-1984. The tests were conducted as required by the IEEE 387-1977 Section 6.2.
6.3	WBN does not fully comply with this section. Specifically, WBN does not comply with Section 6.3.4. This section requires that the load rejection test be conducted from the short-time rating. RG 1.9 R3 requires the test be conducted from 90% to 100% of continuous rating (RG 1.9 R3 Section 2.2.8).
6.4	Full compliance
6.5	Full compliance
7.1	WBN meets the intent of this section. The NRC Standard Review Plan, NUREG-0800, Section 3.11, states that for qualification of mild environment equipment, (e.g., DGs) the design/purchase specification must envelope the normal/abnormal environments.
7.2.1	WBN does not fully comply with this section. Specifically, WBN does not comply with Section 7.2.1(3). This section requires that the load rejection test be conducted using the short-time rating. The qualification test was performed using continuous rating as required by IEEE 387-1977. Furthermore, the 1993 requirement stated in RG 1.9 R3 requires the test be conducted using 90% to 100% of continuous rating (RG 1.9 R3 Section 2.2.8).

SECTION	DEGREE OF COMPLIANCE
7.2.2	WBN meets the intent of this section. The WBN diesel generator reliability qualification tests were conducted before IEEE 387-1984 and 1977 were in effect. Therefore, all 300 tests were conducted with the diesels at standby temperature. However, TVA purchased an additional diesel generator unit (ADGU). This ADGU consists of an EMD 16-645-E4B diesel engine with an Electric Products (Part No. 0-09232-C) generator which is essentially identical to those originally purchased by WBN. The ADGU was tested a total of 56 times in the normal operating temperature range. A step load equal to 100% of the nameplate rating was applied after the unit reached rated speed. All tests were successful. The tests are documented in the Power System documentation package IWO-6036. These tests demonstrate that the WBN DGs are capable of starting at normal operating temperature as specified by this section.
7.2.3	Full compliance
7.3	WBN meets the intent of this section. The NRC Standard Review Plan, NUREG-0800, Section 3.11, states that for qualification of mild environment equipment, (e.g., DGs) the design/purchase specification must envelope the normal/abnormal environments.
7.4	WBN meets the intent of this section, although, the seismic qualification is not conducted per IEEE 344-1975. Refer to Table 3.10-1, Sheet 2, for a summary of the seismic qualification of electrical equipment including the diesel generators. Further, refer to the Table 3.10-3, Sheets 11 through 20 for tests, results, and references of the seismic qualification of various components of the diesel generator unit.
7.5	Full compliance
7.6	Full compliance
7.7	WBN takes exception to this section. Since WBN does not commit to IEEE 323-1983, the documentation requirement of this code does not apply. Please see comment to Section 7.3.

8E Probability/Reliability Analysis of Protection Device Schemes for Associated and Non-Class 1E Cables

Purpose

The purpose of this analysis is to verify that the reliability of (1) a circuit breaker and a fuse in series, or (2) two circuit breakers in series (without periodic testing) is essentially equal to the reliability of a single circuit breaker periodically tested.

It also verifies that the probability of a single fuse's failure is essentially equivalent to the probability of simultaneous failure of two series circuit breakers (without regard to periodic testing).

Assumptions

(1) Each circuit breaker is tested every 18 months.

(2) The circuit is taken out of service during the circuit breaker test.

(3) Testing does not decrease the reliability of the device tested.

(4) Redundant protection devices have a mission time of 40 years (350,400 hours); based on a 40-year plant life.

(5) Tested circuit breakers have a mission time of 18 month (13,140 hours), assuming all failures are detected by the test.

(6) Failure data for reliability calculations are the recommended failure data obtained from IEEE 500-1977.

(7) Failure data for probability of failure calculations are the maximum failure data obtained from IEEE 500-1977.

Part A - Reliability Analysis

Method of Analysis

For this part of the analysis a reliability calculation was made on each redundant protective device scheme and a single circuit breaker periodically tested. As defined in IEEE 352-1975, reliability is the characteristic of an item expressed as the probability that it will perform a required mission under stated conditions for a stated mission time. Mathematically, this is shown as:

Reliability = exp [$-\lambda$ t], where λ = failure rate
t = mission time

Analysis

Utilizing the above assumptions and mathematical formula and the following recommended failure rates obtained from IEEE 500-1977, the reliability calculation for each protection scheme was made.

Component	(Recommended Value)	Failure Mode
D. C. Circuit Breaker	0.139 per 10^6 hrs.	All
A. C. Circuit Breaker	0.144 per 10^6 hrs.	All
Fuse	0.03 per 10^6 hrs.	All

Therefore, the reliability for each type of periodically tested circuit breaker follows:

Component	Reliability
DC Breaker	$R = \exp[-1.39 \times 10^{-7} (13140)] = 0.9982$
AC Breaker (Low Voltage)	$R = \exp[-1.44 \times 10^{-7} (13140)] = 0.9981$

In order to calculate the reliability of the possible redundant protective schemes, the unreliability of each device must be determined which is simply:

Unreliability (R) - 1-Reliability = 1-exp [-λ t]

Based on the above formula and a mission time of 40 years the unreliability is:

Unreliability (R)

Component	Unreliability (R)
DC Breaker	$\overline{R} = 1 - R = 1 - \exp[-1.39 \times 10^{-7} (350400)]$
	$= 1 - 0.951 = \underline{0.048}$
AC Breaker (Low Voltage)	$\overline{R} = 1 - \exp[-1.44 \times 10^{-7} (350400)]$
	$= 1 - 0.951 = \underline{0.049}$
Fuse	$\overline{R} = 1 - \exp[-3.00 \times 10^{-8} (350400)]$
	$= 1 - 0.990 = \underline{0.010}$

The reliability for each redundant scheme will be calculated as the product of each component's unreliability subtracted from one, which is formulated as:

R = 1-[R(A) x R(B)]; where A and B are the respective components for each redundant scheme.

The reliabilities for each redundant protection scheme are:

Redundant Scheme	Reliability (R)
Two A.C. Breakers (Low Voltage)	R = 1-[R(A)xR(B)] = 1-[(0.049) (0.049)] = 0.9976
Fuse w/A.C. Breaker (Low Voltage)	R = 1-[(0.049) (0.010)] = 0.9995

Fuse w/D.C. BreakerR = 1-[(0.048) (0.01)] = 0.9995
Two D. C. BreakersR = 1-[(0.048) (0.048)] = 0.9977

Results:

PROTECTION	APPLICATION	
SCHEME	D.C.	A.C.
One circuit breaker periodically tested	0.9982	0.9981
Two circuit breakers with no testing	0.9977	0.9976
Circuit breaker & fuse with no testing	0.9995	0.9995

These results indicate very little difference between the reliability of two redundant protective devices and a single device periodically tested. Their reliability is essentially equal. A fuse and circuit breaker combination appears to be somewhat more reliable than a periodically tested breaker which appears to be somewhat more reliable than two series circuit breaker.

Several assumptions were made to simplify this analysis. In all cases the assumptions were conservatively stated in favor of periodically testing. That is, the reliability figures for a single device with periodic testing are inflated in proportion to the stated assumptions.

When the conservative assumptions are considered along with the numerical results, it is obvious that redundant protective devices are at least as reliable as a single periodically tested device. Therefore, it is concluded that any of these protective schemes are viable, and the selection for each application should be based on feasibility and economic considerations.

Part B - Probability of Failure Analysis

Method of Analysis

The probability of failure approach was used to compare a single fuse with two low voltage A.C. circuit breakers (without regard to periodic testing). This allows a straightforward comparison based on failure rates of these components. Also, this approach allows a more direct evaluation for the condition of most concern (i.e., failure of a protective device to open). Therefore, the probability of failure for the fuse (low-voltage) to open on a given operation is obtained from the IEEE 500-1977 maximum failure rate data. For the above redundant scheme, the maximum probability of failure (PF) to open of both series components is the PF(A) times the PF(B); where A=B=maximum failure rate of low voltage A.C. breaker.

Analysis

IEEE 500-1977 lists the following maximum failure rates (λ):

Component	Maximum Value (Failure to Open)
Fuse (Low-voltage)	10 per 10^6 operations
AC Breaker (Low-voltage)	2265 per 10^6 operations

Based on the above failure data, the probability of failure for the two protection schemes is:

Event	PF (Failure to Open)
Fuse failure (Low-voltage)	$PF = \frac{10}{10^6} = 10 \times 10^{-6}$ /operation
Simultaneous failure of Two A.C. Breakers (Low-voltage)	$PF = \left(\frac{2265}{10^6}\right) \times \left(\frac{2265}{10^6}\right)$ $= 5.13 \times 10^{-6}$ /operation

Results:

This analysis verifies that a fuse has a very low probability of failure. Being a passive device with no moving parts and requiring no energy source other than the fault itself, a fuse is much less likely to fail than a circuit breaker. In fact, the results of this analysis show that the probability of a fuse failure is about the same as the probability of two circuit breakers failing simultaneously. Therefore, it is concluded that a single fuse provides the same level protection as two circuit breakers in series.

Conclusion:

This analysis clearly demonstrates that each of the following protective schemes provides cable protection which is at least as reliable as a single circuit breaker with periodic testing:

(1) a circuit breaker and a fuse in series,

(2) two circuit breakers in series, or

(3) a single fuse.

Therefore, any of these protection schemes may be selected in lieu of periodically testing a single circuit breaker. The selection can be made on a feasibility and economic basis since the level of protection is essentially the same. Any of these protection schemes will adequately protect the non-Class 1E or associated cables and prevent degradation of the Class 1E cables.