Knight Piésold
CONSULTING

Figures

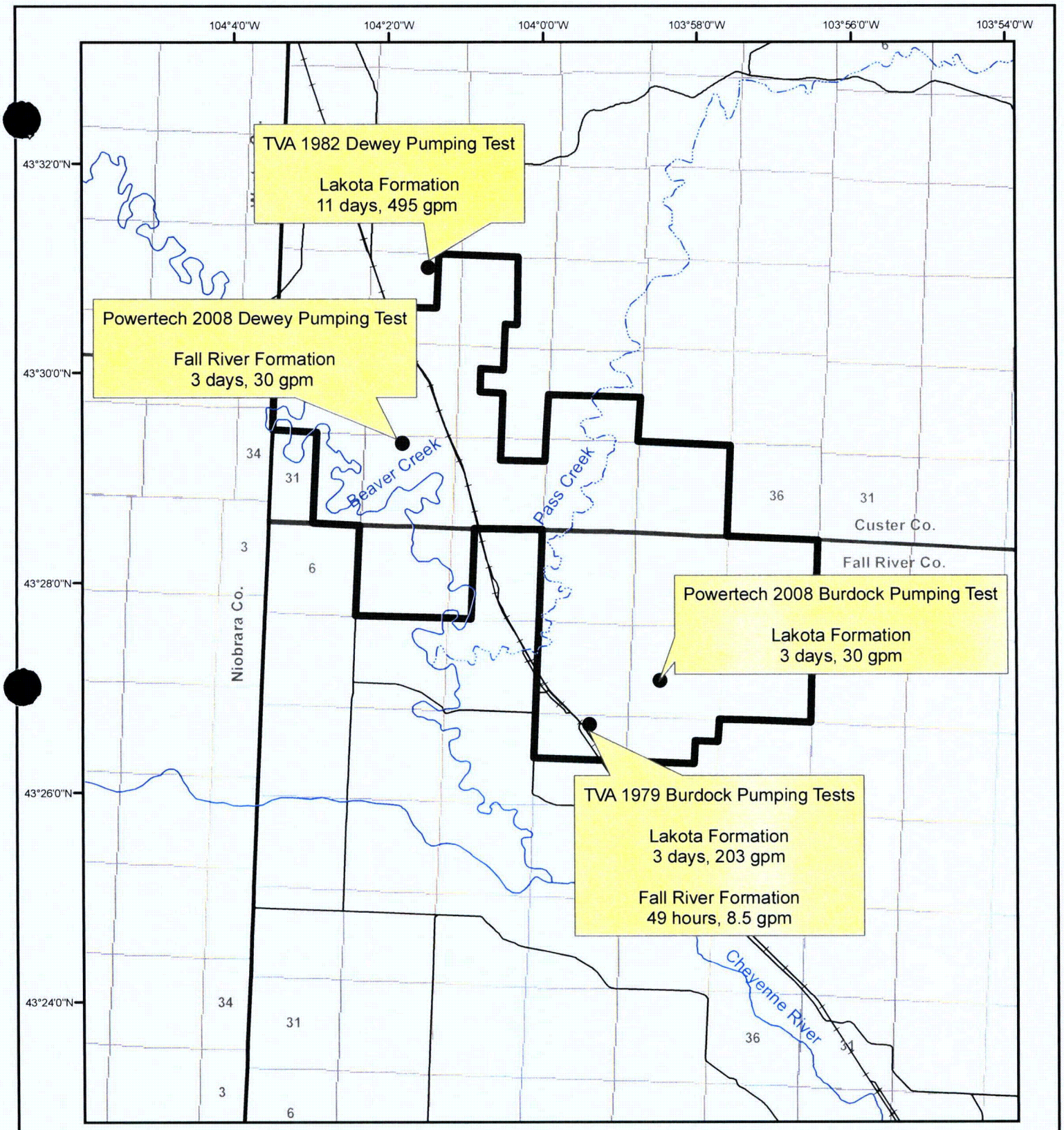

Legend

- Proposed Permit Boundary
- Sections
- Roads
- Railroad
- Perennial Streams
- Ephemeral Streams
- Pumping Test Wells

N

0 0.4 0.8 1.2 1.6 Miles

POWERTECH (USA) INC.

Figure 1.1

1979-1982 and 2008 Pumping Test Locations

Dewey-Burdock Project

NAD 1983 South Dakota South (ft)

Created By:	C. Hocking, RESPEC
Date:	11/11/08
Map File:	Figure_1_1.mxd

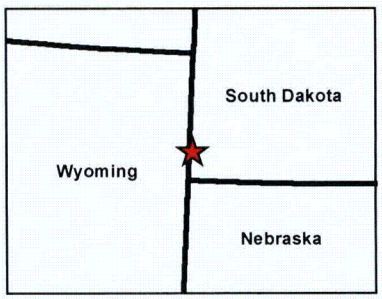

PERIOD	FORMATION	Sym-bol	COLUMN	LITHOLOGIC DESCRIPTION	Thickness	CORRELATION
Tertiary	White River Fm.	Twr		Volcanic Ash	0-500 ft	
Cretaceous	Pierre Fm.	Kp		Dark Gray Shale, weather brown, fossiliferous	0-1000 ft	
	Niobrara Fm.	Kn		Gray calcareous shale weathers yellow	0-225 ft	
	Carlile Fm.	Kcr		Gray shale w/ thin ss beds	0-540 ft	
	Greenhorn LS	Kg		Thin bed hard limestone, fossiliferous	0-50 ft	
	Belle Fourche Fm. Mowry Shale Newcastle SS Skull Creek Sh	Kgs		Lt gy shale, bentonite w/concretions Thin brn -yellow ss Black carbonaceous sh	0-870 ft	
	Fall River Fm.	Kfr		Interbed red-brn massive ss and carbonaceous shale	30-165 ft	Uranium Zone
	Fuson Sh.			Gy-purple sh, bentonite, concretions	0-160 ft	
	Minnewasta LS			Lt gy massive ls	0-25 ft	
	Lakota Fm.	Klk		Coarse massive ss, buff-gray coal near base	130-230 ft	Uranium Zone
Jurassic	Morison Fm.	Jm		Green maroon sh	0-125 ft	
	Unkapa Fm	Ju		fine gr massive ss	0-240 ft	
	Sundance Fm	Jsd		red ss interbeds and red to green marine sh	250-450 ft	

Client	Project	Title	
Knight Piésold CONSULTING	DEWEY-BURDOCK HYDROGEOLOGIC TESTING REPORT	Site Stratigraphy	
	Project No: DV10200279.01	Date: 11/12/08	Figure 2.1

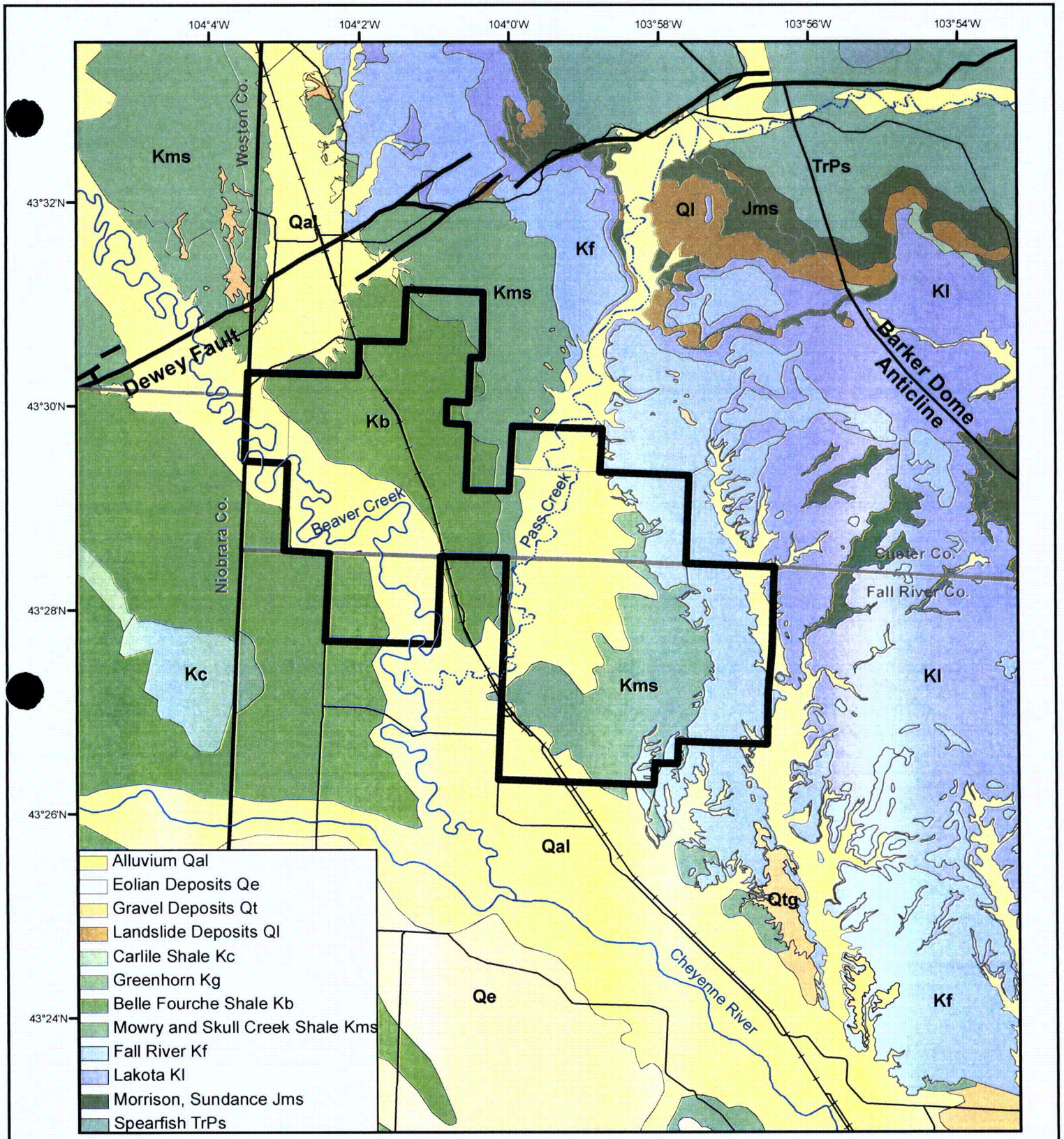

Legend

- Proposed Permit Boundary
- Roads
- Railroad
- Perennial Streams
- Ephemeral Streams

N

0 0.4 0.8 1.2 1.6 Miles

1:92,597

POWERTECH (USA) INC.

Figure 2.2

Site Surface Geology

Dewey-Burdock Project

NAD 1983 South Dakota South (ft)	
Created By:	C. Hocking
Date:	11/11/08
Map File:	Figure_2_2.mxd

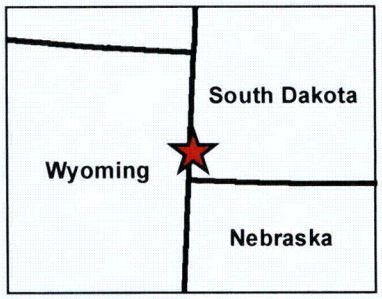

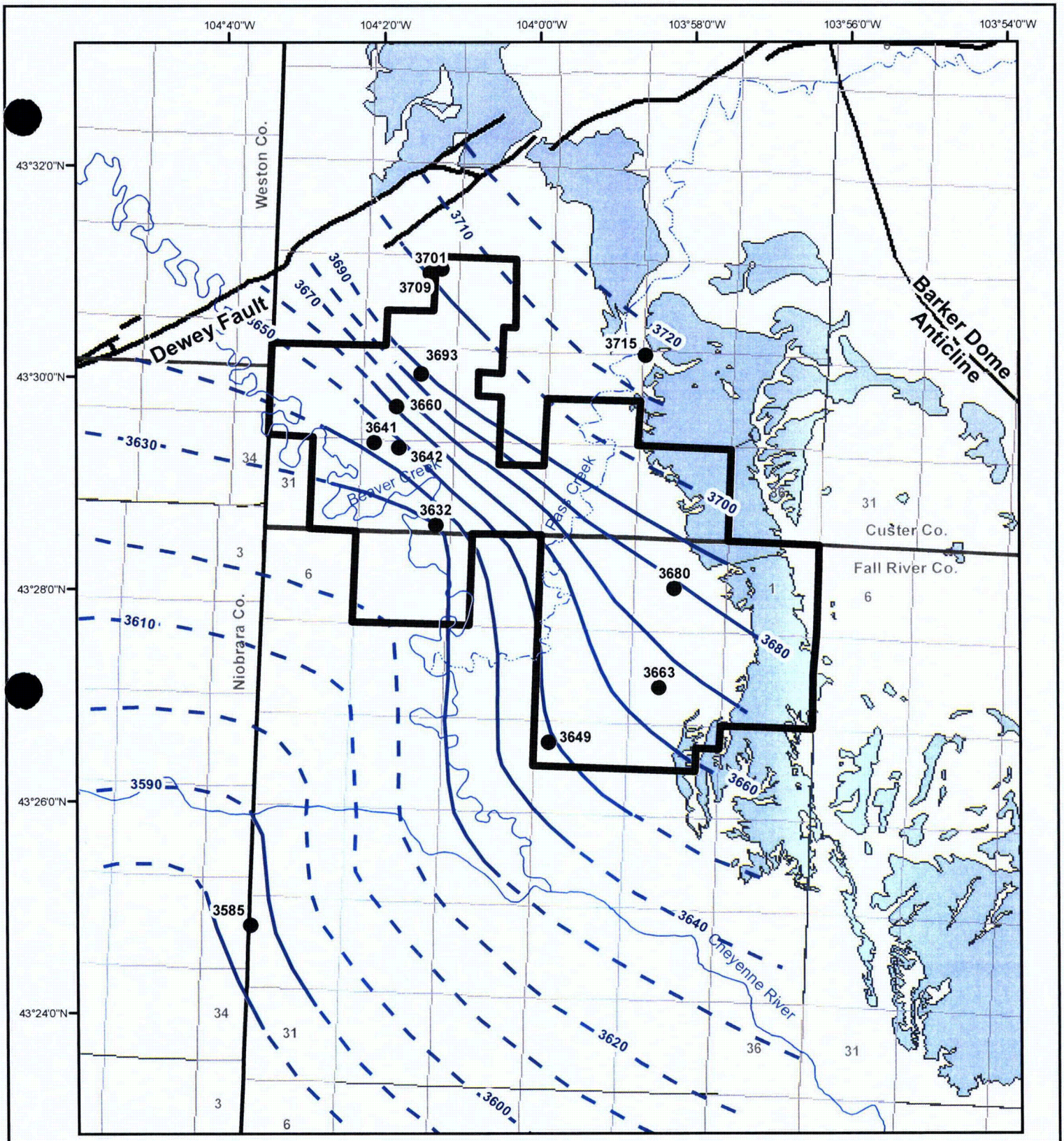

Legend

- **Proposed Permit Boundary**
- Fall River Outcrop
- **Perennial Streams**
- Ephemeral Streams
- 2008 Potentiometric Surface in Feet
- Fall River Water Elevations in Feet

N

0 0.4 0.8 1.2 1.6 Miles

1:89,172

POWERTECH (USA) INC.

Figure 2.3

Potentiometric Surface Fall River Aquifer 2008

Dewey-Burdock Project

NAD 1983 South Dakota South (ft)

Created By:	C. Hocking, RESPEC
Date:	11/12/08
Map File:	Figure_2_3.mxd

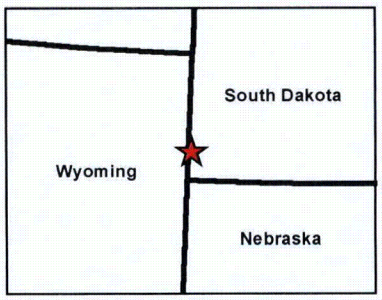

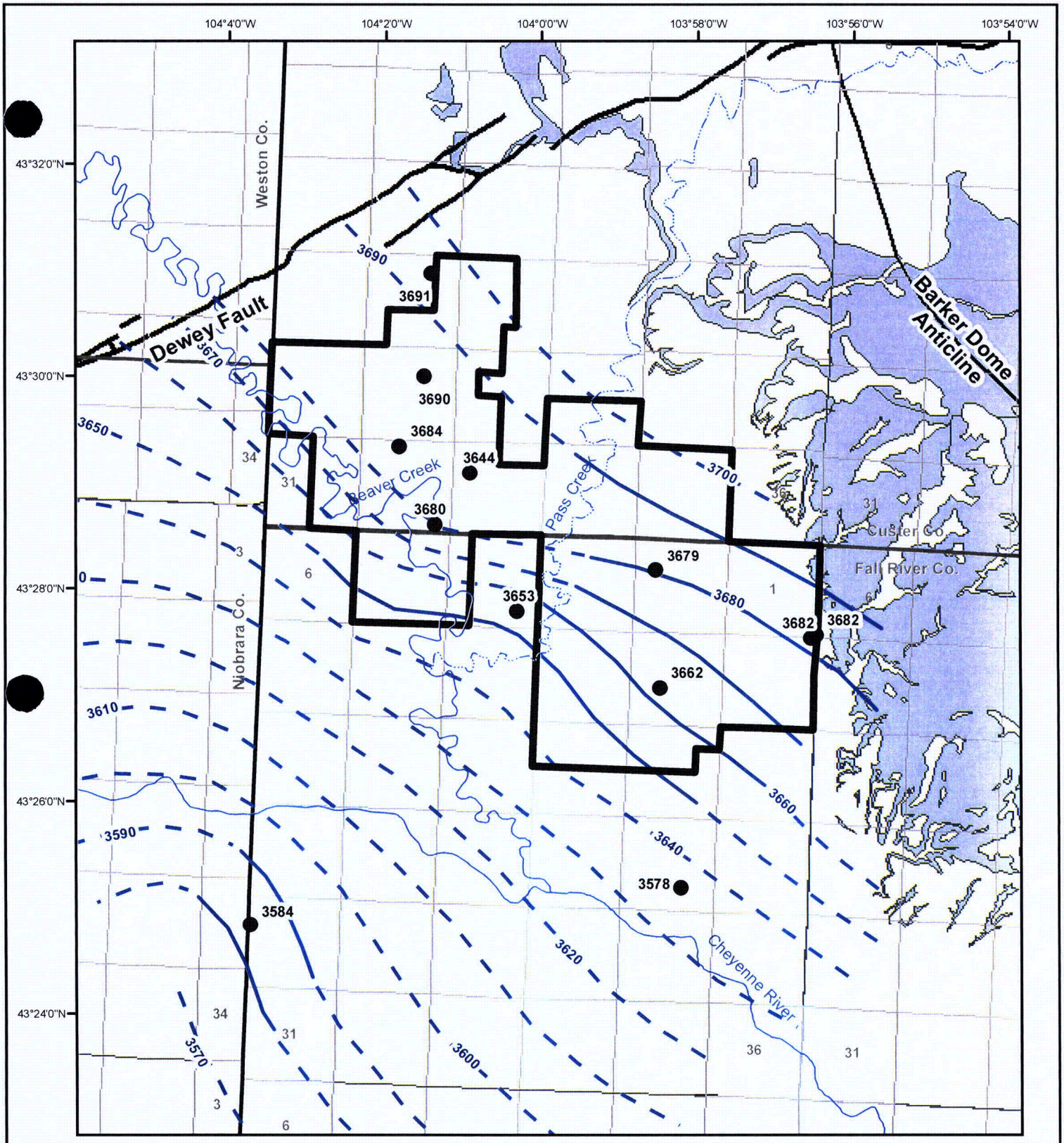

Legend

- **Proposed Permit Boundary**
- Lakota Outcrop
- **Perennial Streams**
- Ephemeral Streams
- 2008 Potentiometric Surface in Feet
- Lakota Water Elevations in Feet

N

0 0.4 0.8 1.2 1.6 Miles

1:89,172

POWERTECH (USA) INC.

Figure 2.4

Potentiometric Surface Lakota Aquifer 2008

Dewey-Burdock Project

NAD 1983 South Dakota South (ft)

Created By:	C. Hocking, RESPEC
Date:	11/12/08
Map File:	Figure_2_4.mxd

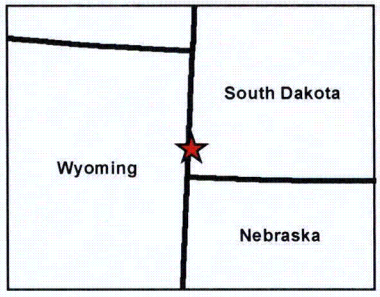

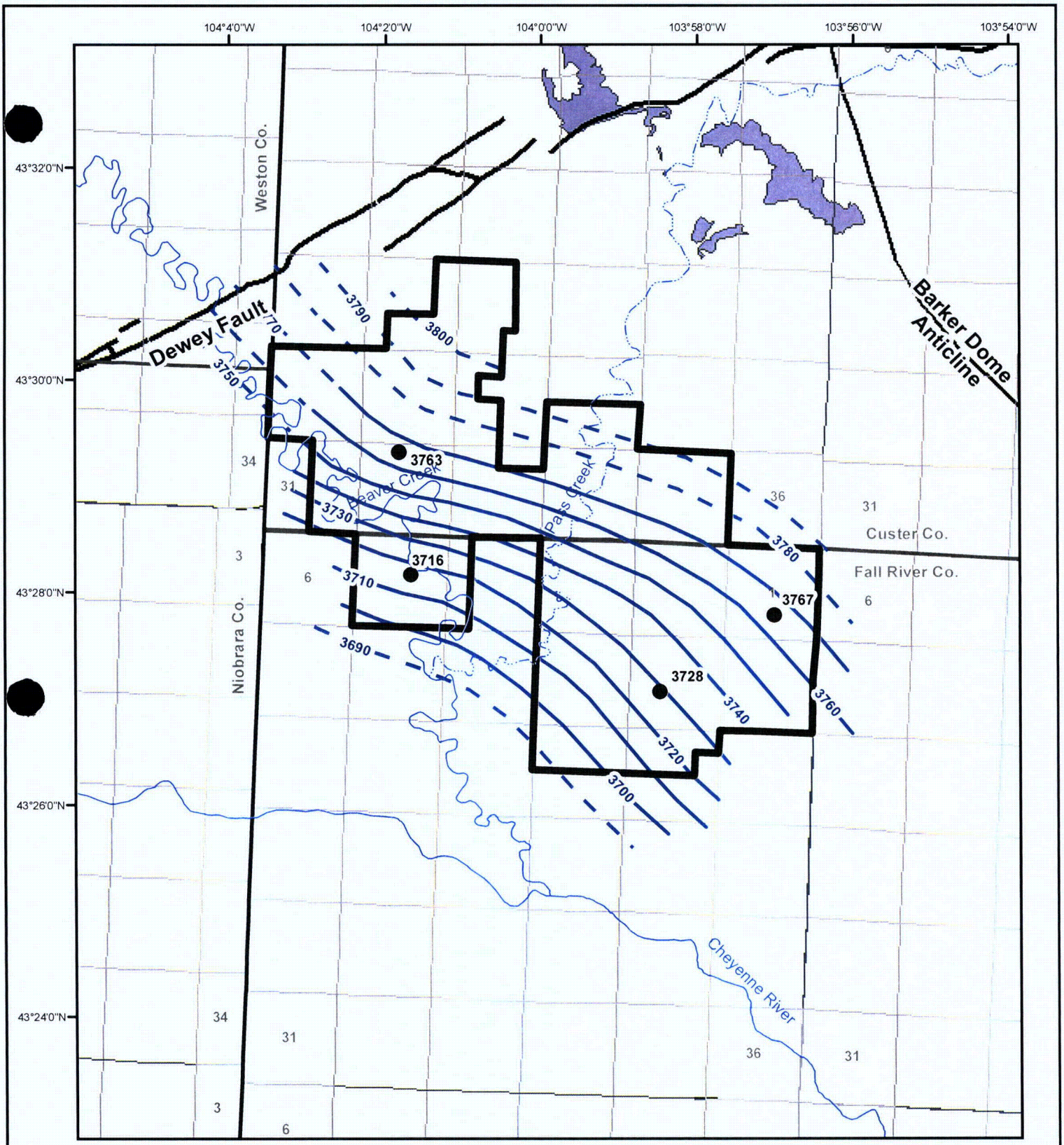

Legend

- **Proposed Permit Boundary**
- Sundance/Unkpapa Outcrop
- **Perrenial Streams**
- Ephemeral Streams
- 2008 Potentiometric Surface in Feet
- Unkpapa Water Elevations in Feet

N

0 0.4 0.8 1.2 1.6 Miles

1:89,172

POWERTECH (USA) INC.

Figure 2.5

Potentiometric Surface Unkpapa Aquifer 2008

Dewey-Burdock Project

NAD 1983 South Dakota South (ft)

Created By:	C. Hocking, RESPEC
Date:	11/12/08
Map File:	Figure_2_5.mxd

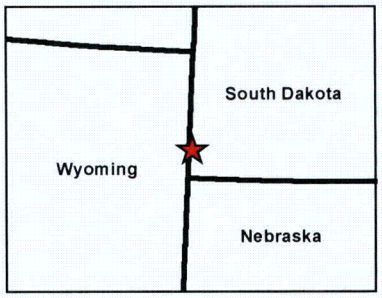

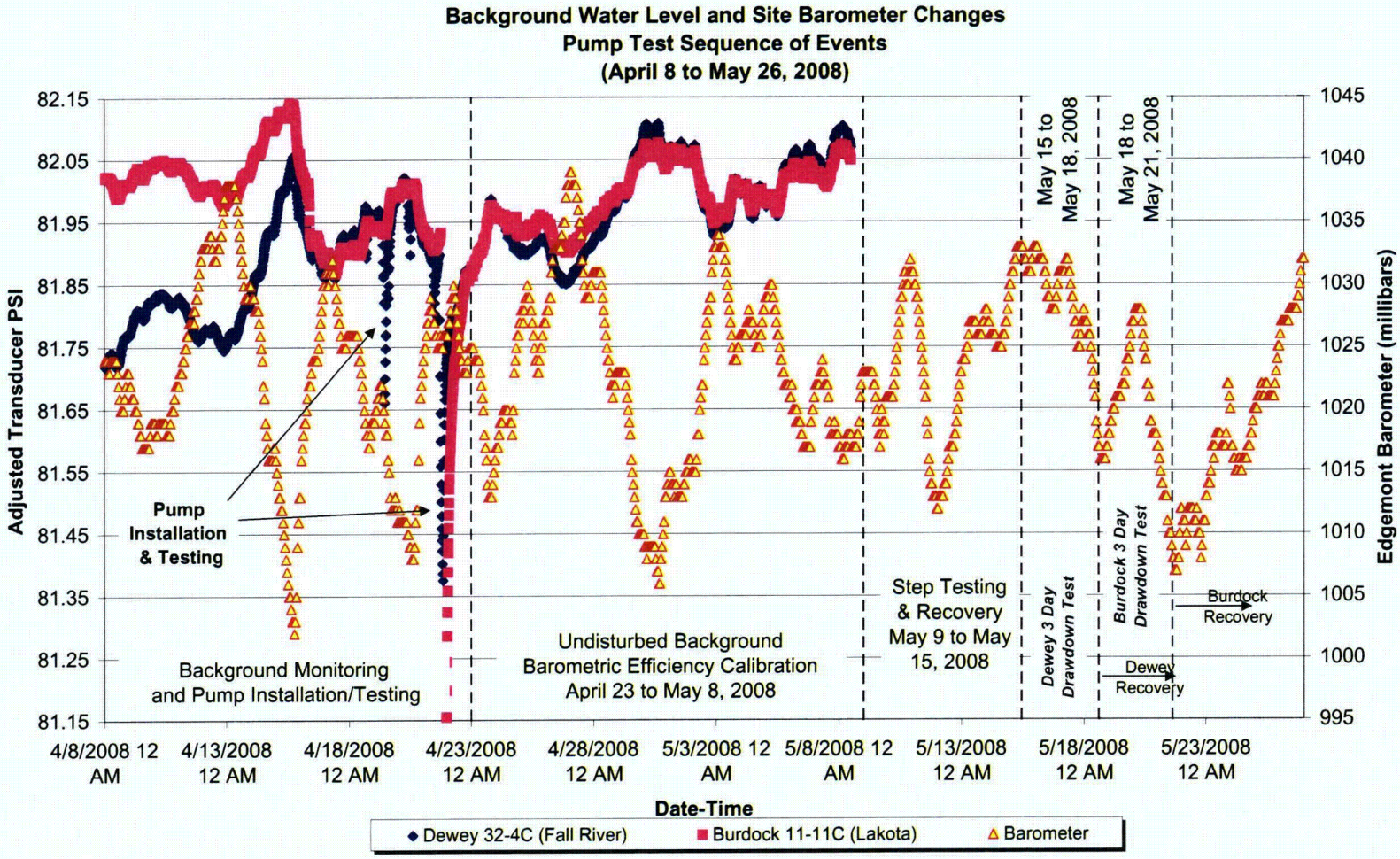

Client	Project	Title	
Knight Piésold CONSULTING	DEWEY-BURDOCK HYDROGEOLOGIC TESTING REPORT	Background Monitoring (April 8 to May 26, 2008)	
	Project No: DV10200279.01	Date: 11/12/08	Figure 3.1

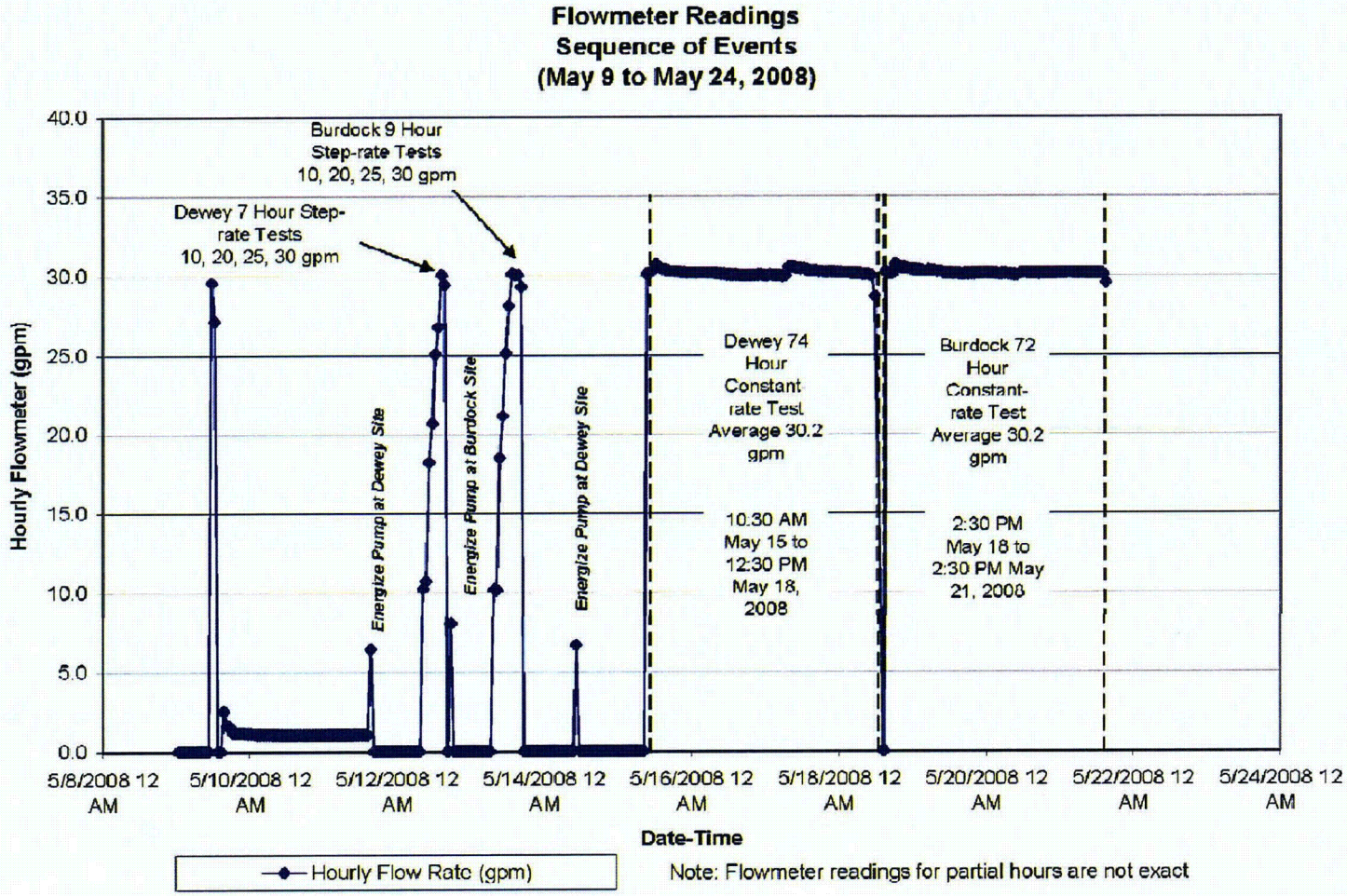

Note: Flowmeter readings for partial hours are not exact

Client	Project	Title	
Knight Piésold CONSULTING	DEWEY-BURDOCK HYDROGEOLOGIC TESTING REPORT	Flowmeter Readings (May 9 to May 24 2008)	
	Project No: DV10200279.01	Date: 11/12/08	Figure 3.2

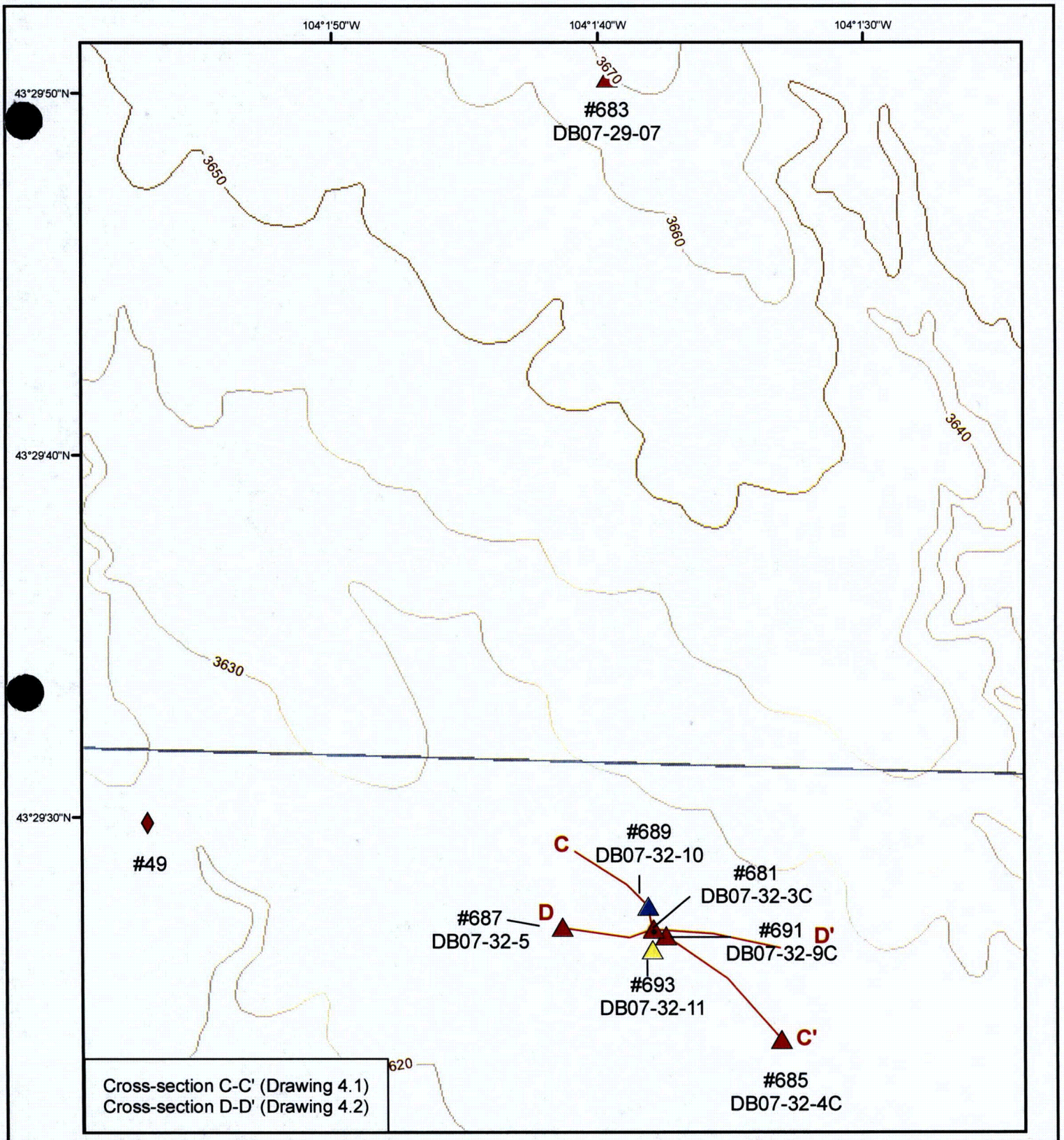

Legend

- Fall River Pump Well
- Fall River Monitor Well
- Fall River Stock Well
- Lakota Monitor Well
- Unkpapa Monitor Well

10 ft contour interval

N

0 100 200 300 400 Feet

POWERTECH (USA) INC.

Figure 4.1

Dewey May 2008 Pumping Test Well Locations

Dewey-Burdock Project

NAD 1983 South Dakota South (ft)

Created By:	C. Hocking, RESPEC
Date:	11/11/08
Map File:	Figure_4_1.mxd

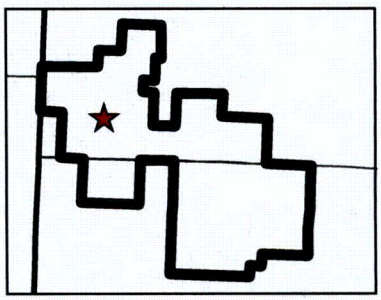

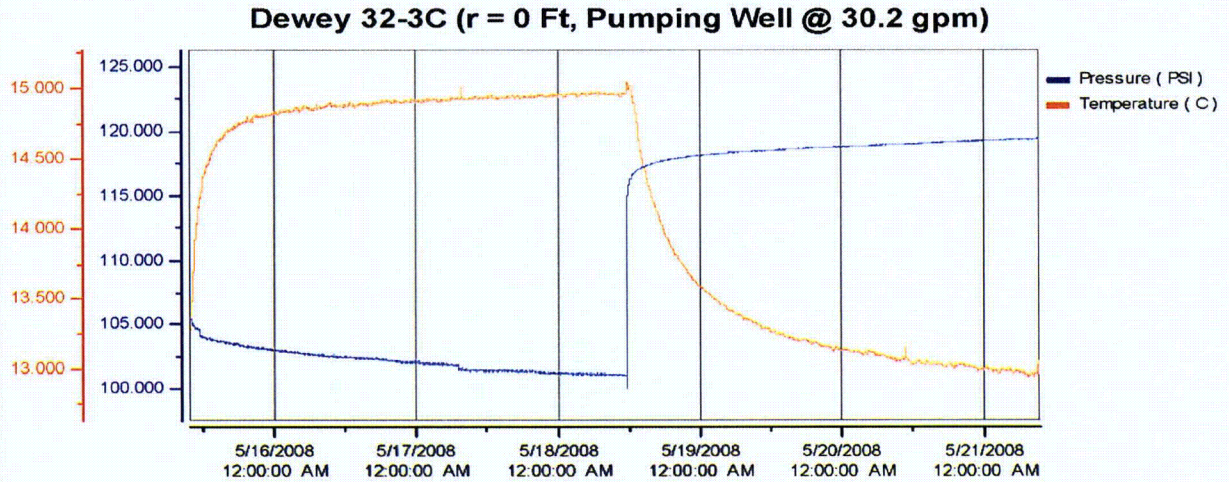

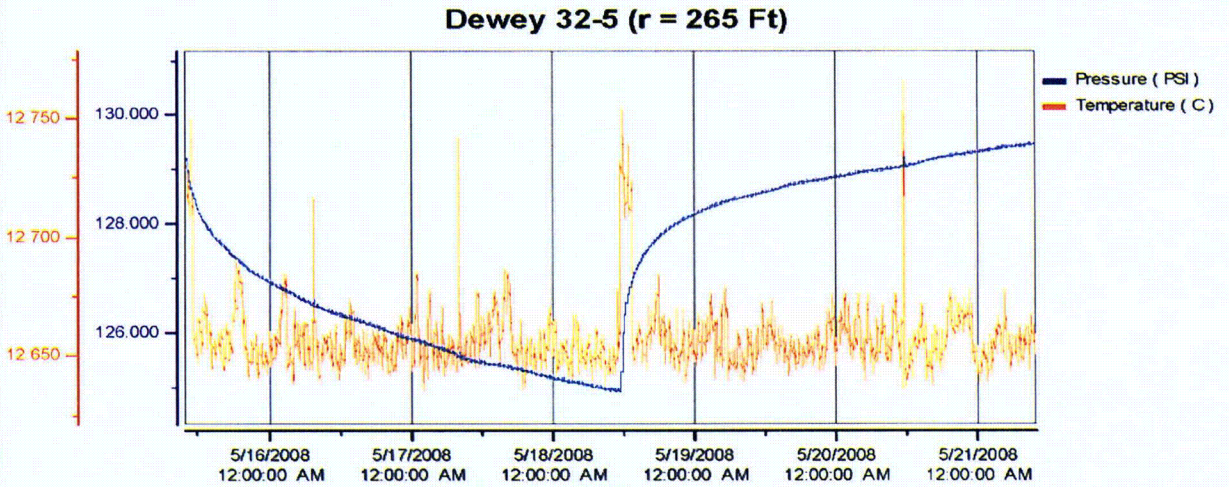

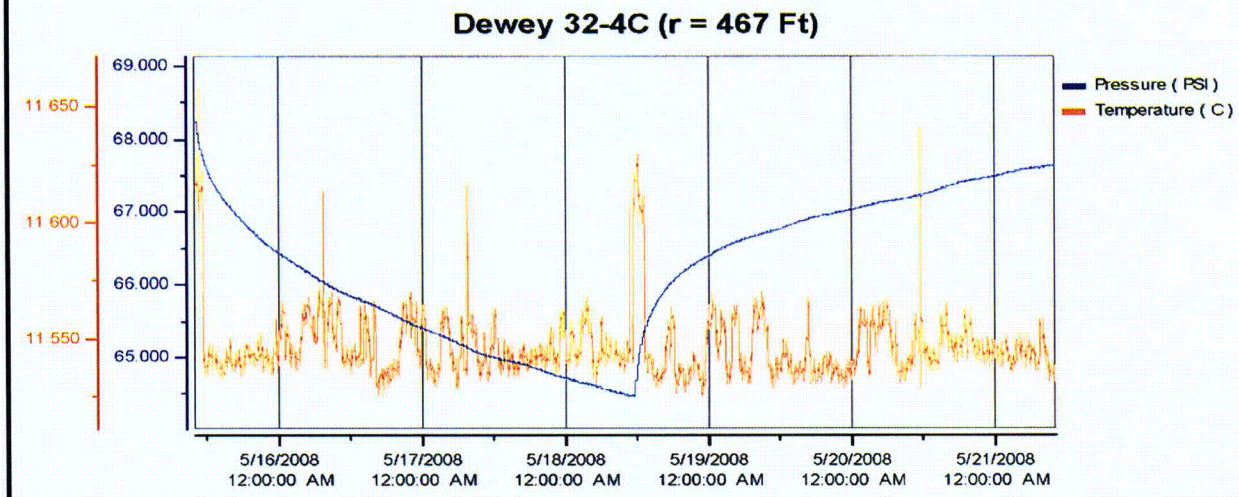

Client	Project	Title	
Knight Piésold CONSULTING	DEWEY-BURDOCK HYDROGEOLOGIC TESTING REPORT	Transducer Response at Dewey Test Pumping Well 32-3C, Observation Wells 32-5 and 32-4C	
	Project No: DV10200279.01	Date: 11/12/08	Figure 4.2

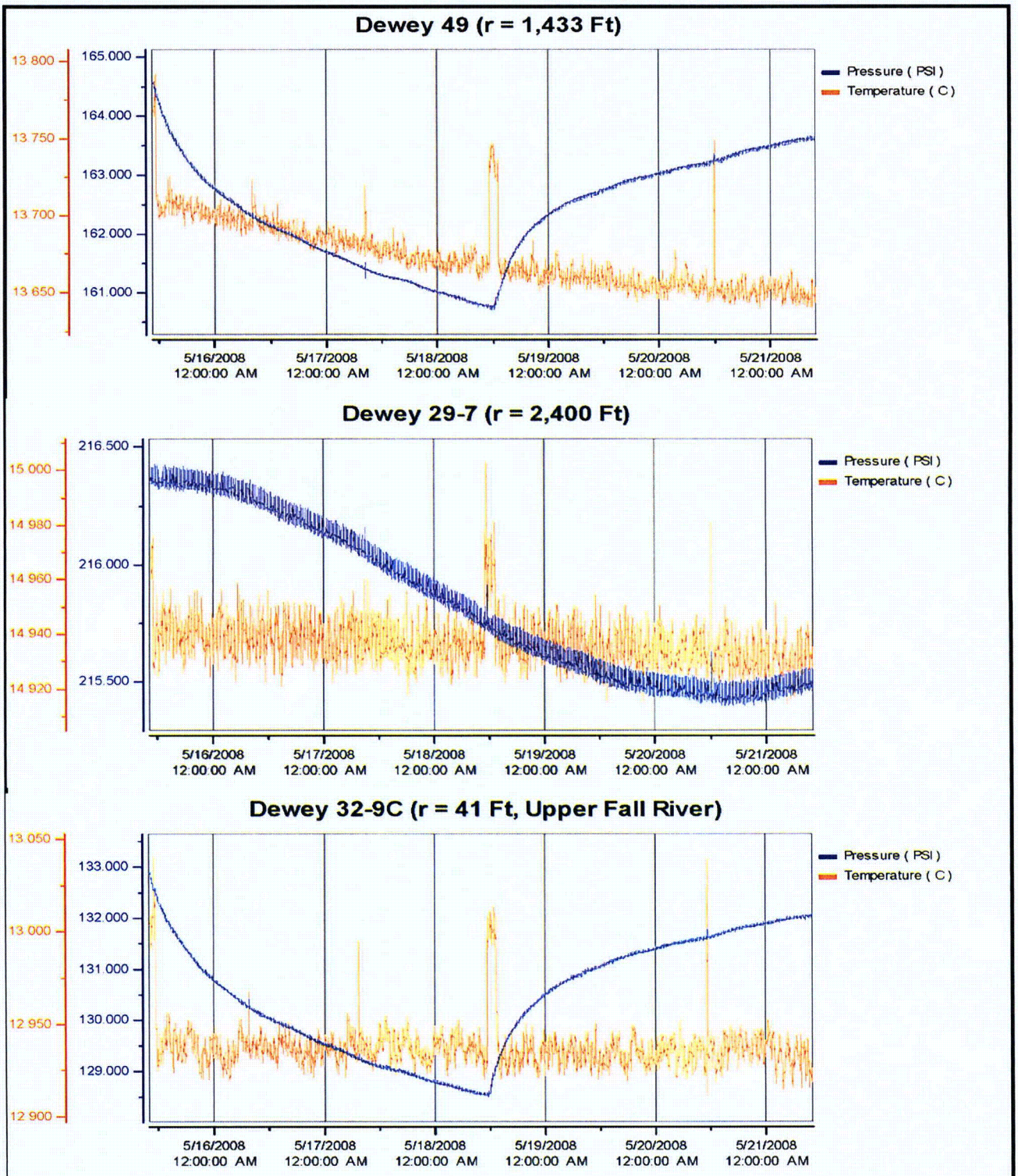

Client	Project	Title	
Knight Piésold CONSULTING	DEWEY-BURDOCK HYDROGEOLOGIC TESTING REPORT	Transducer Response at Dewey Test Observation Wells GW-49, 29-7 and 32-9C	
	Project No: DV10200279.01	Date: 11/12/08	Figure 4.3

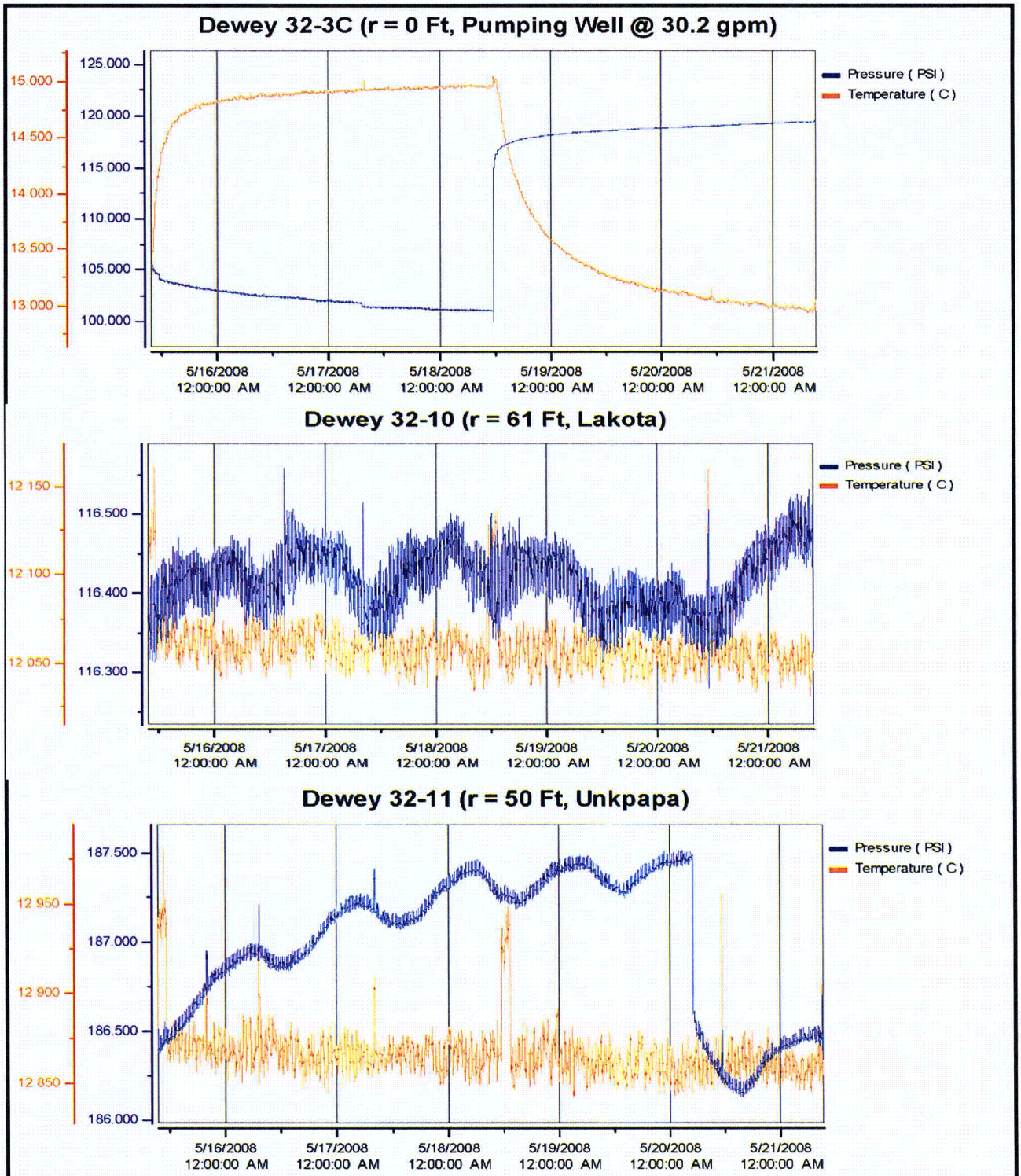

Client	Project	Title	
Knight Piésold CONSULTING	DEWEY-BURDOCK HYDROGEOLOGIC TESTING REPORT	Non-responding Dewey Test Observation Wells 32-10 (Lakota) and 32-11 (Unkpapa) compared to Pumping Well	
	Project No: DV10200279.01	Date: 11/12/08	Figure 4.4

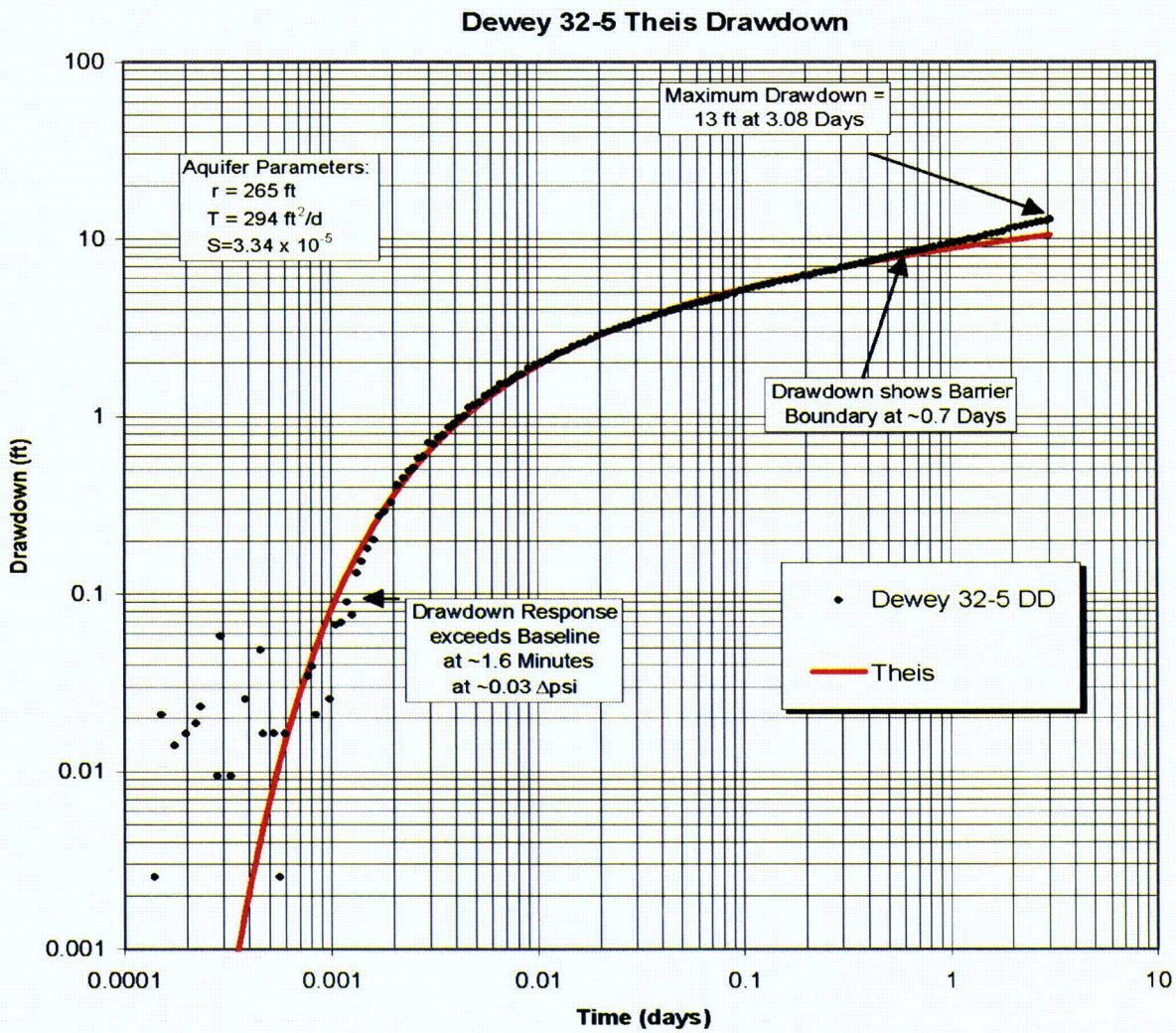

Client	Project	Title	
Knight Piésold CONSULTING	DEWEY-BURDOCK HYDROGEOLOGIC TESTING REPORT	Drawdown and Analysis at Dewey Test Observation Well 32-5	
	Project No: DV10200279.01	Date: 11/12/08	Figure 4.5

Theis Recovery

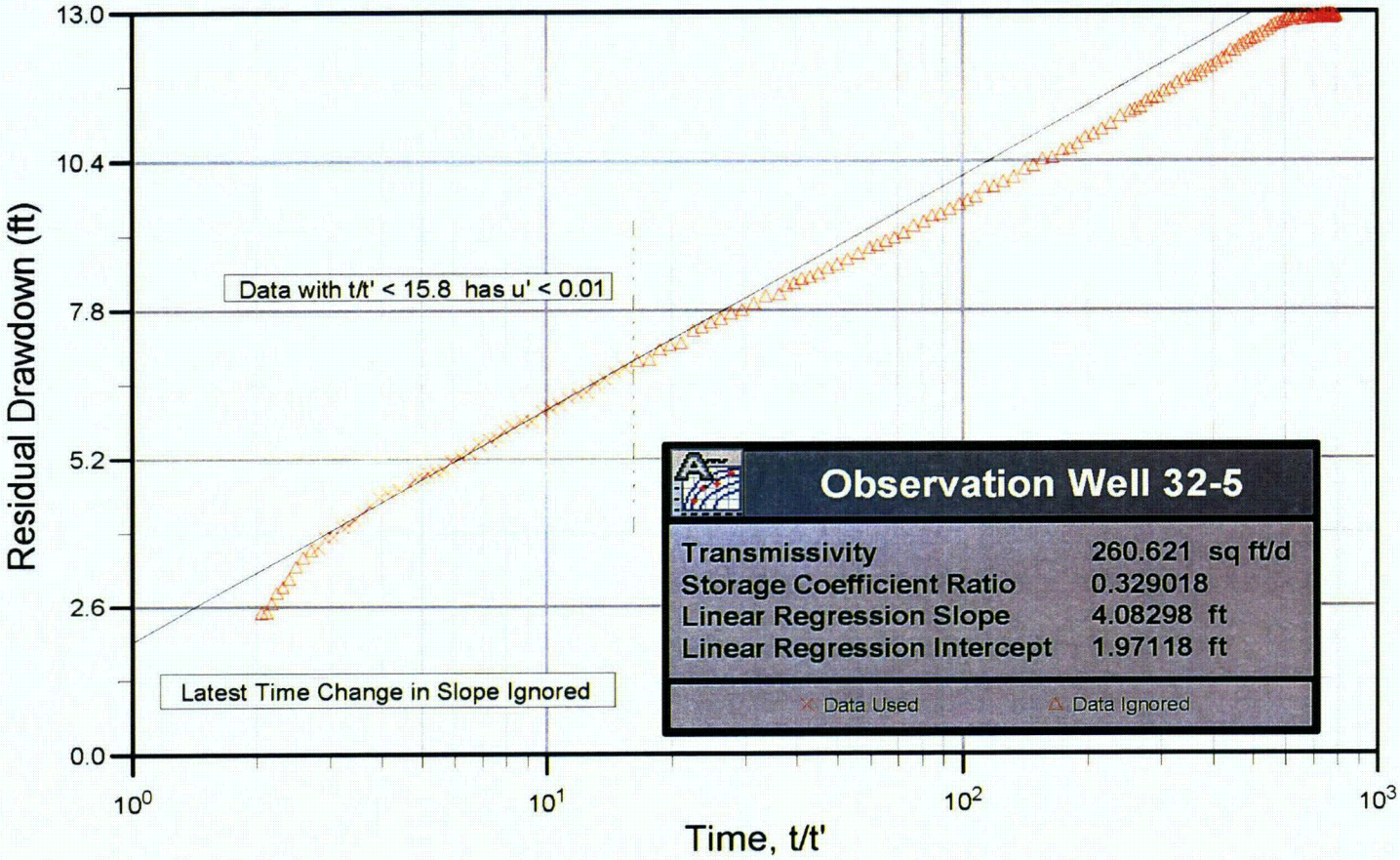

Client	Project	Title	
Knight Piésold CONSULTING	DEWEY-BURDOCK HYDROGEOLOGIC TESTING REPORT	Theis Recovery Analysis at Dewey Observation Well 32-5	
	Project No: DV10200279.01	Date: 11/12/08	Figure 4-6

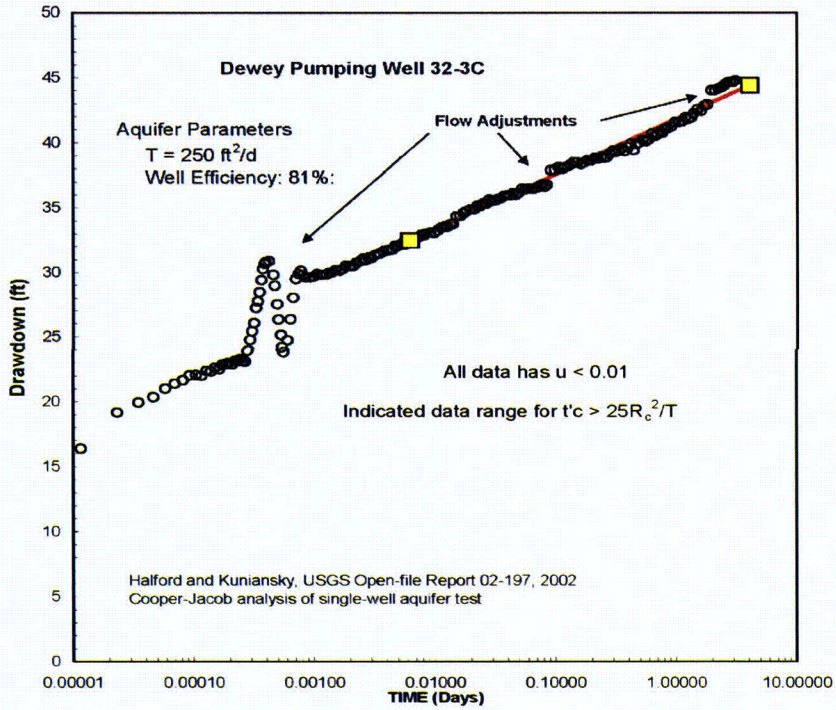

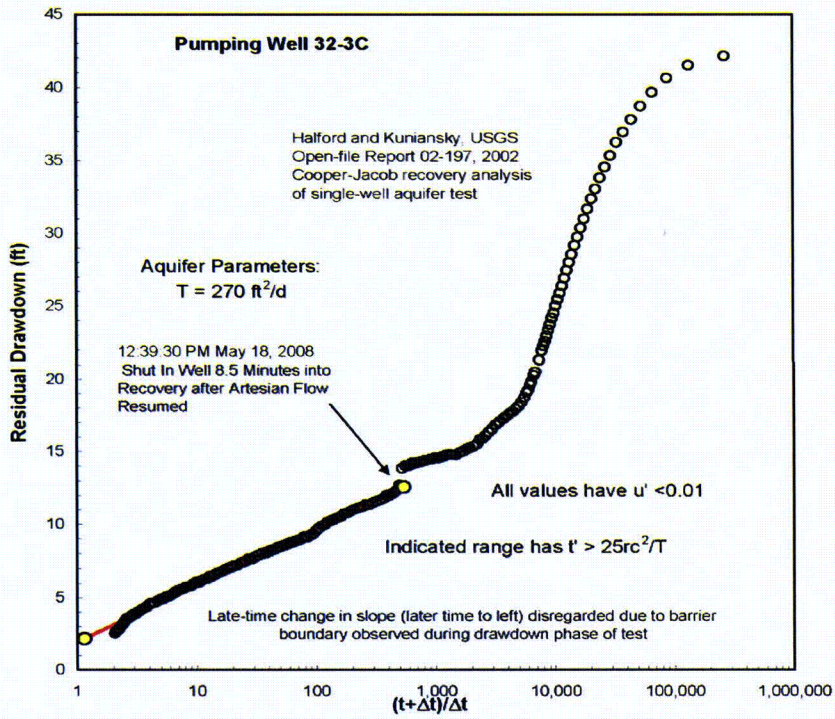

Client	Project	Title	
Knight Piésold CONSULTING	DEWEY-BURDOCK HYDROGEOLOGIC TESTING REPORT	Straight-line Analyses of Drawdown and Recovery at Dewey Pumping Well 32-3C	
	Project No: DV10200279.01	Date: 11/14/08	Figure 4.7

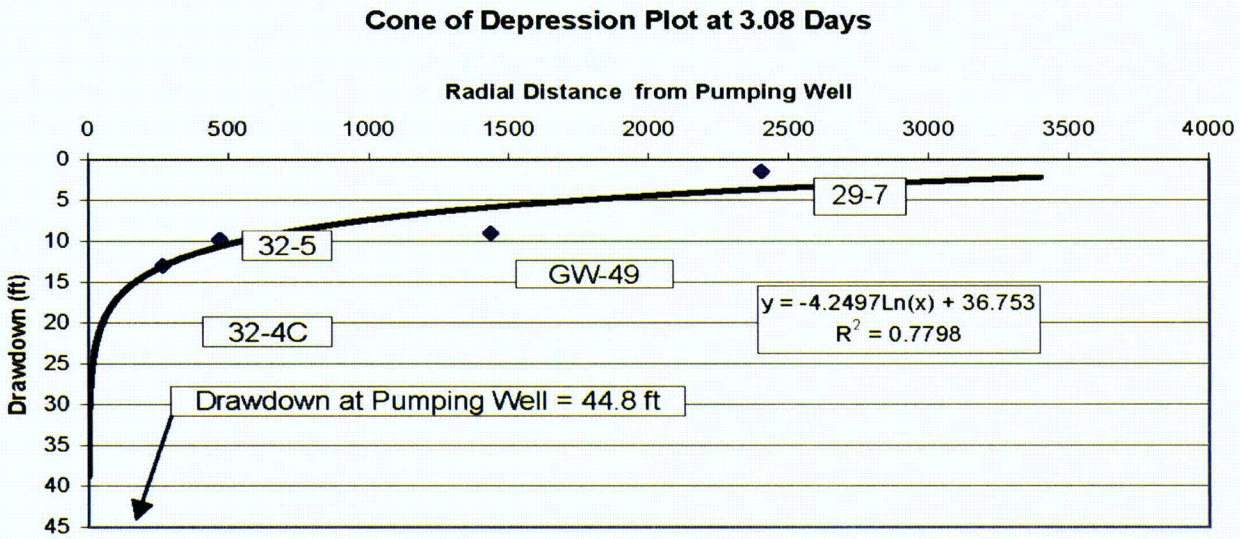

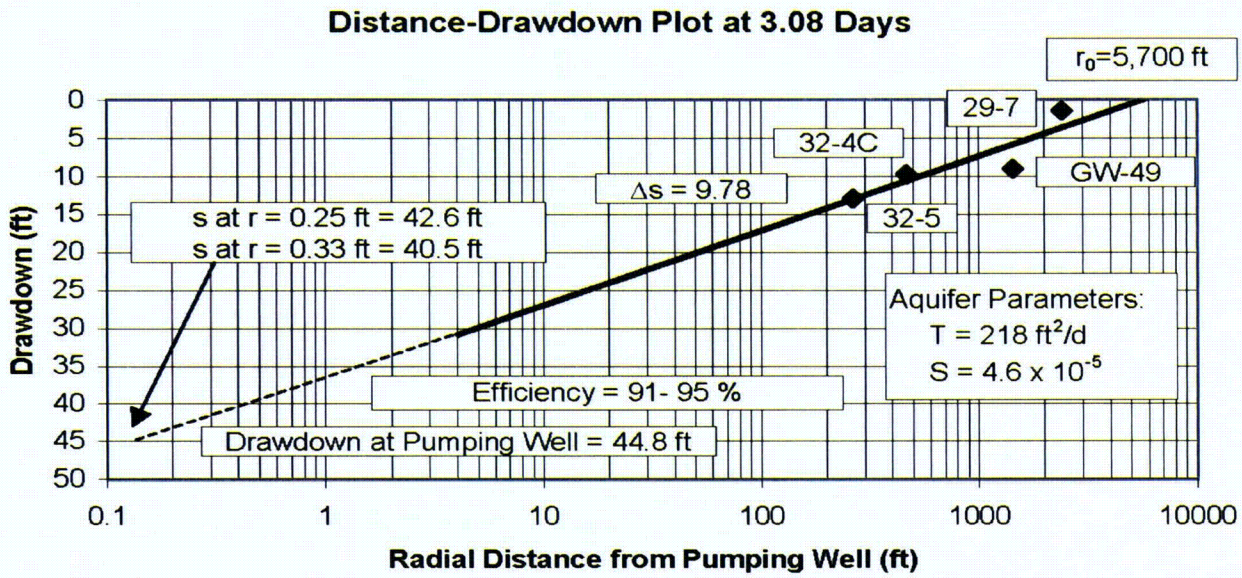

Client	Project	Title	
Knight Piésold CONSULTING	DEWEY-BURDOCK HYDROGEOLOGIC TESTING REPORT	Distance Drawdown Analysis, Dewey Pumping Test	
	Project No: DV10200279.01	Date: 11/12/08	Figure 4.8

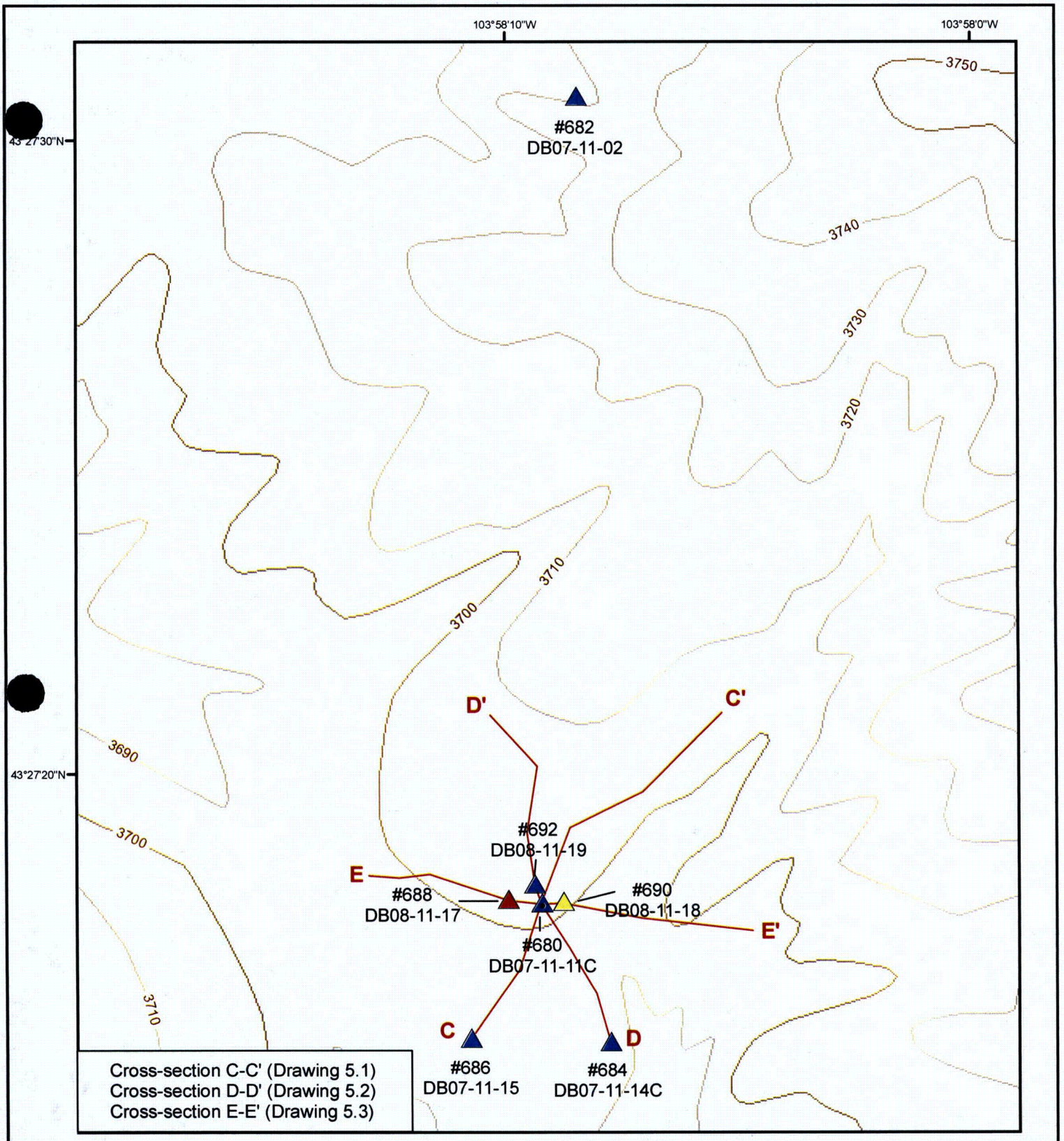

Legend

- Lakota Pump Well
- Lakota Monitor Well
- Fall River Monitor Well
- Unkpapa Monitor Well

10 ft contour interval

N

0 50 100 150 200 Feet

POWERTECH (USA) INC.

Figure 5.1

Burdock May 2008 Pumping Test Well Locations

Dewey-Burdock Project

NAD 1983 South Dakota South (ft)

Created By:	C. Hocking, RESPEC
Date:	11/11/08
Map File:	Figure_5_1.mxd

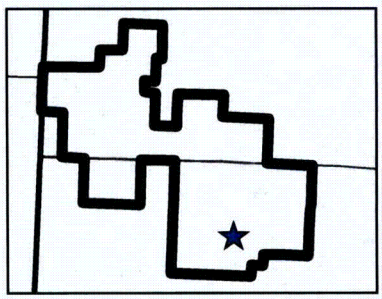

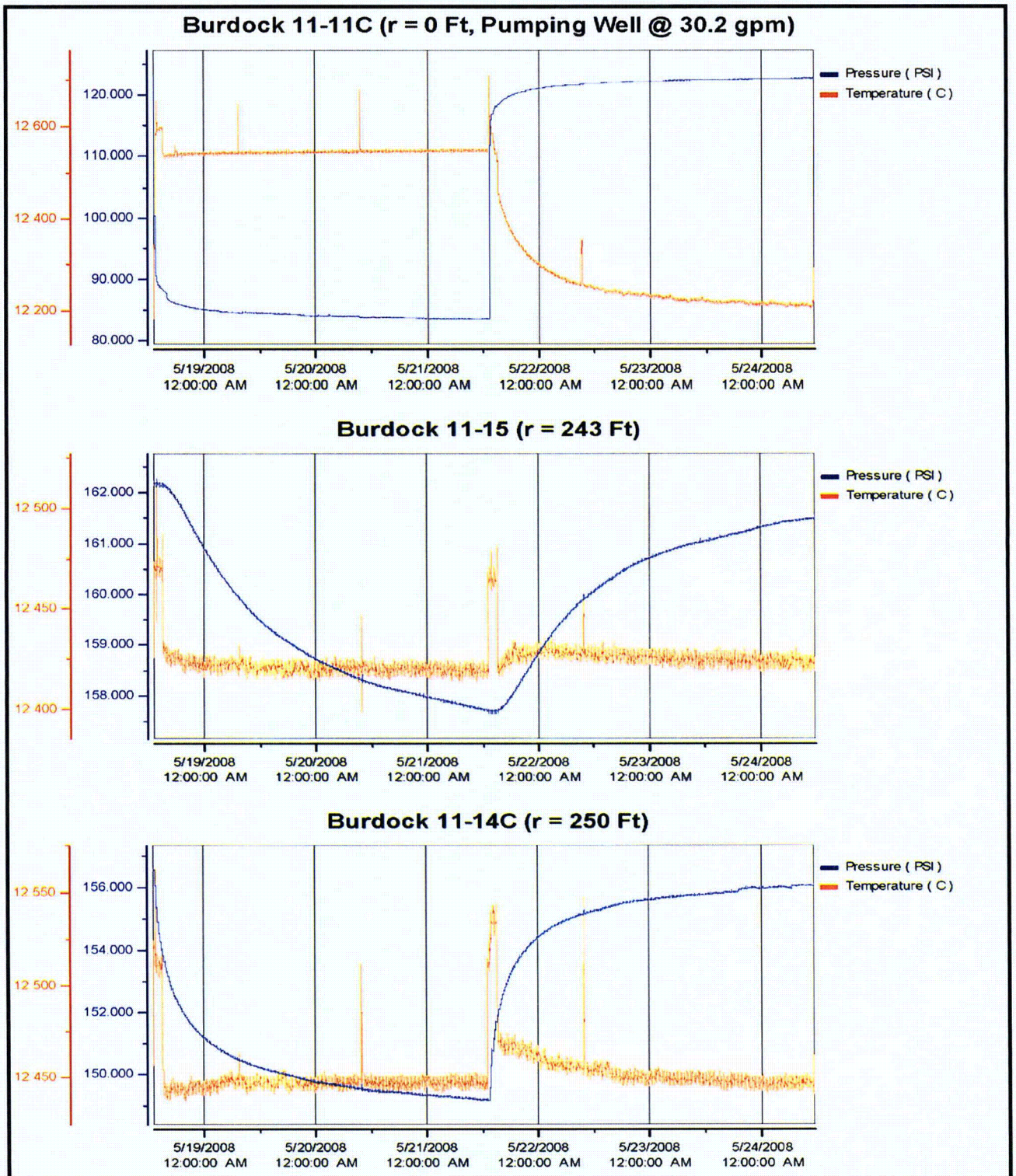

Client	Project	Title	
Knight Piésold CONSULTING	DEWEY-BURDOCK HYDROGEOLOGIC TESTING REPORT	Transducer Response at Burdock Test Pumping Well 11-11C, Observation Wells 11-15, and 11-14C	
	Project No: DV10200279.01	Date: 11/12/08	Figure 5.2

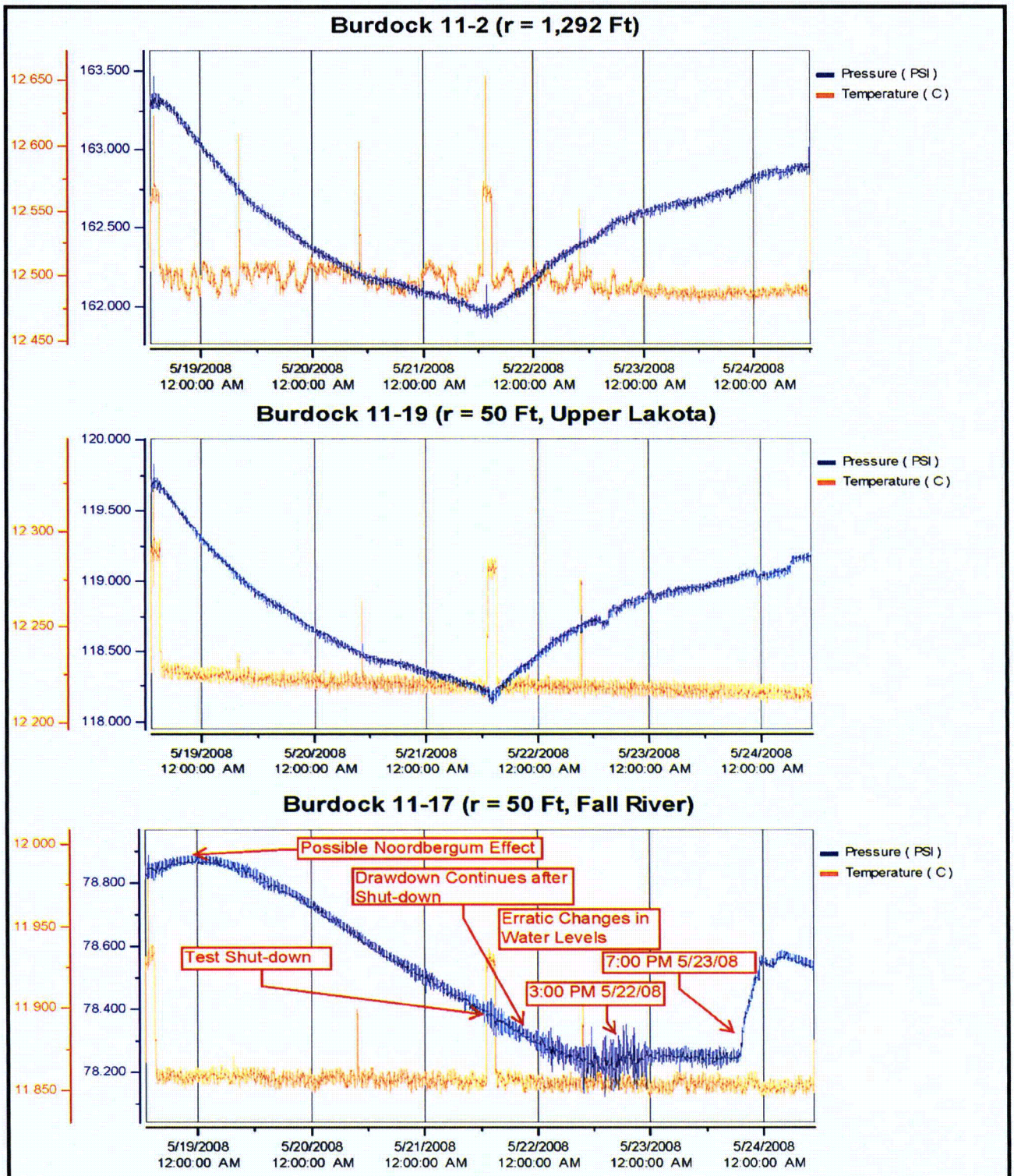

Client	Project	Title	
Knight Piésold CONSULTING	DEWEY-BURDOCK HYDROGEOLOGIC TESTING REPORT	Transducer Response at Burdock Test Observation Wells 11-2, 11-19 and 11-17	
	Project No: DV10200279.01	Date: 11/12/08	Figure 5.3

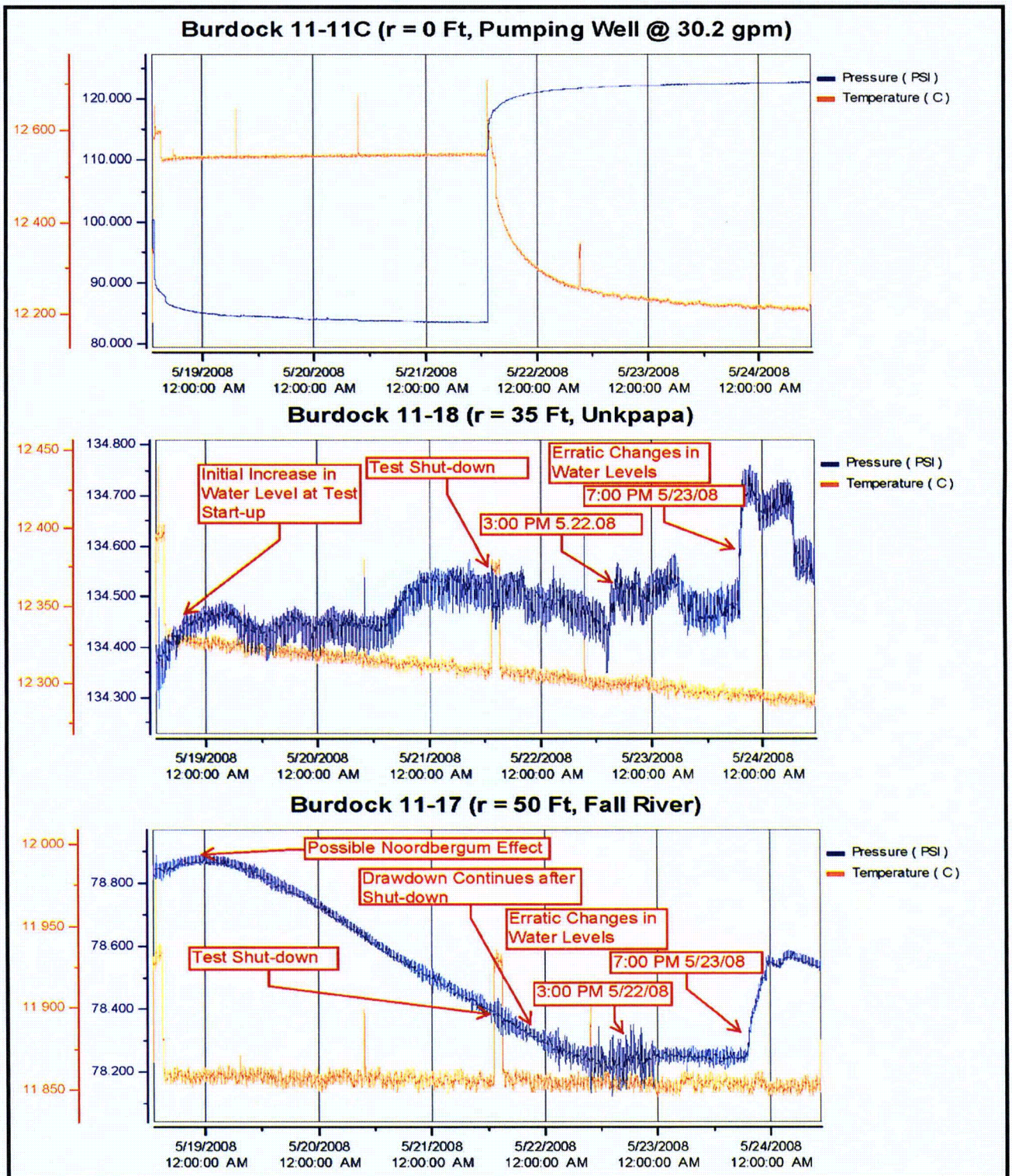

Client	Project	Title	
Knight Piésold CONSULTING	DEWEY-BURDOCK HYDROGEOLOGIC TESTING REPORT	Non-responding Burdock Test Observation Well 11-18 (Unkpapa) compared to Pumping Well and Observation Well 11-17 (Fall River)	
	Project No: DV10200279.01	Date: 11/12/08	Figure 5.4

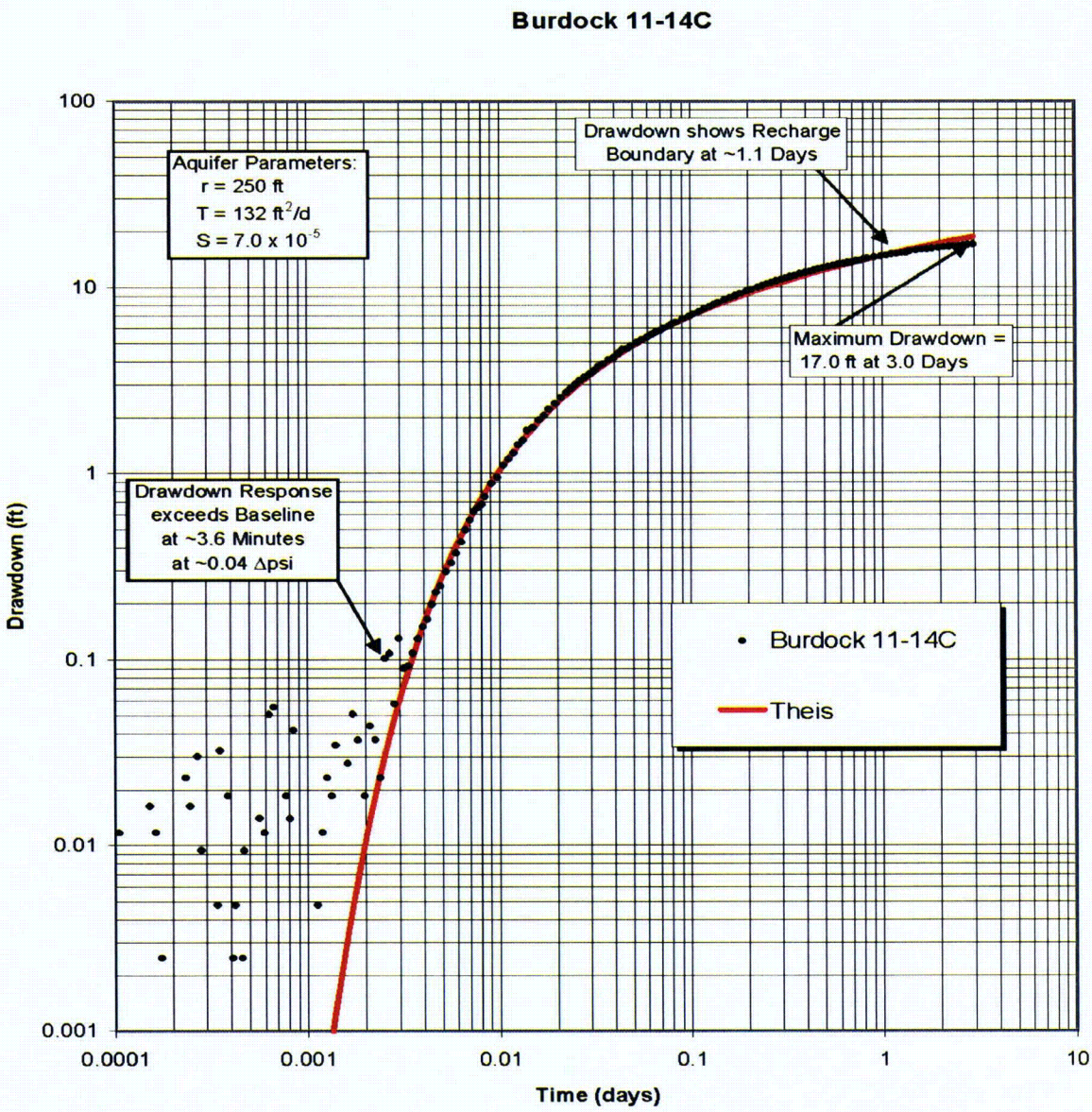

Client	Project	Title	
Knight Piésold CONSULTING	DEWEY-BURDOCK HYDROGEOLOGIC TESTING REPORT	Drawdown and Analysis at Burdock Test Observation Well 11-14C	
	Project No: DV10200279.01	Date: 11/12/08	Figure 5.5

Hantush and Jacob (1955)

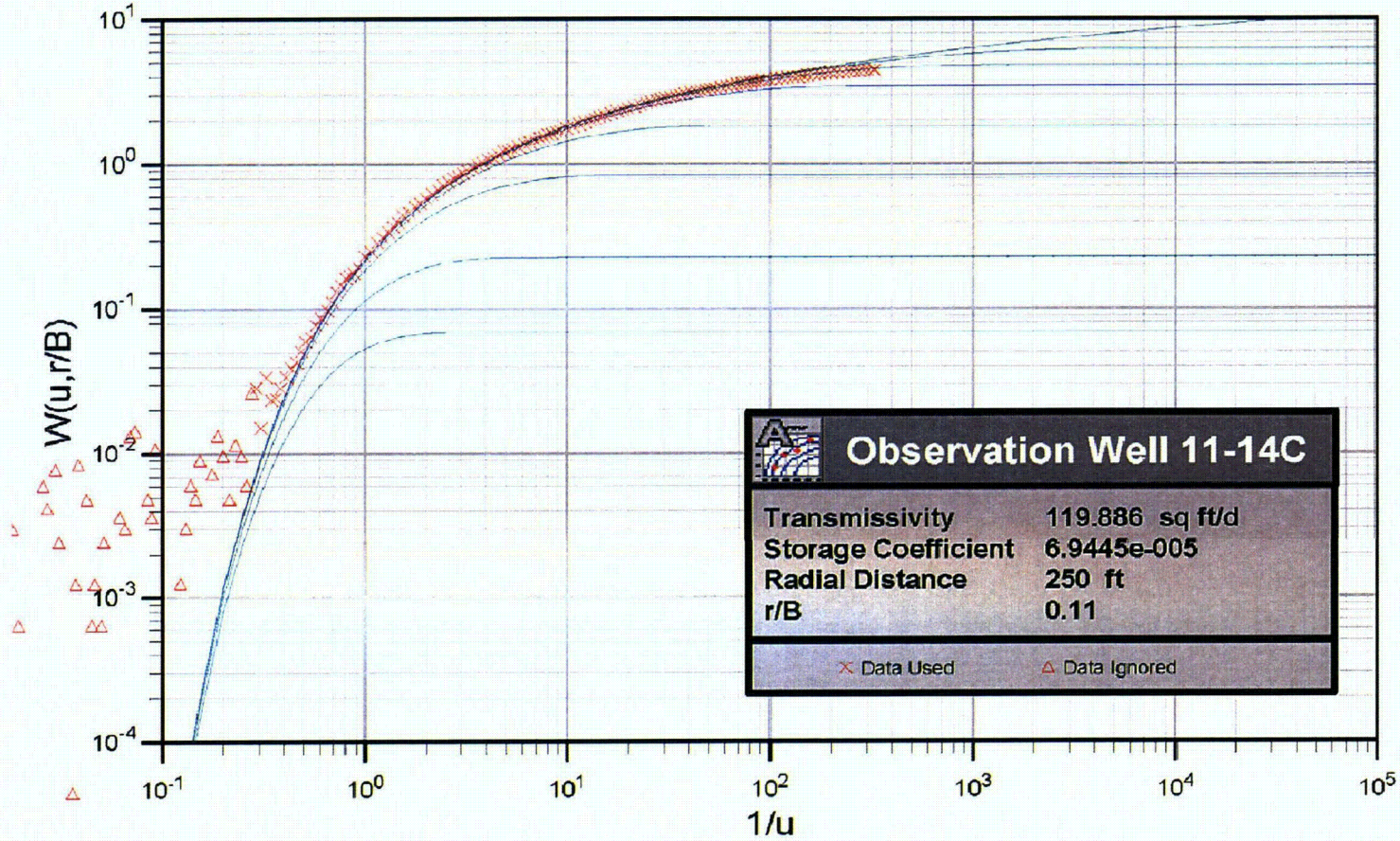

Client	Project	Title	
Knight Piésold CONSULTING	DEWEY-BURDOCK HYDROGEOLOGIC TESTING REPORT	Hantush-Jacob Leaky Confined Aquifer Analysis at Burdock Observation Well 11-14C	
	Project No: DV10200279.01	Date: 11/12/08	Figure 5.6

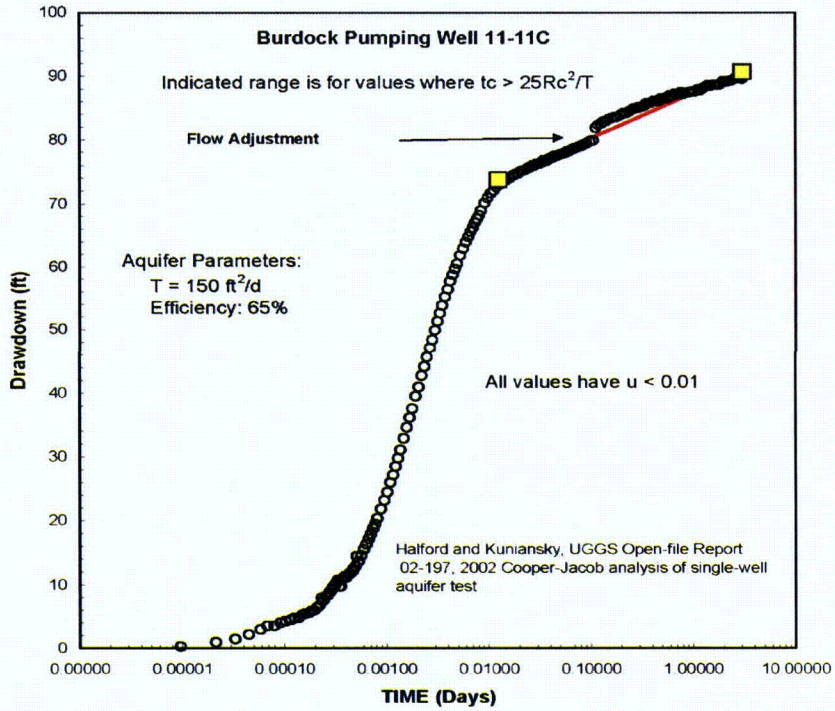

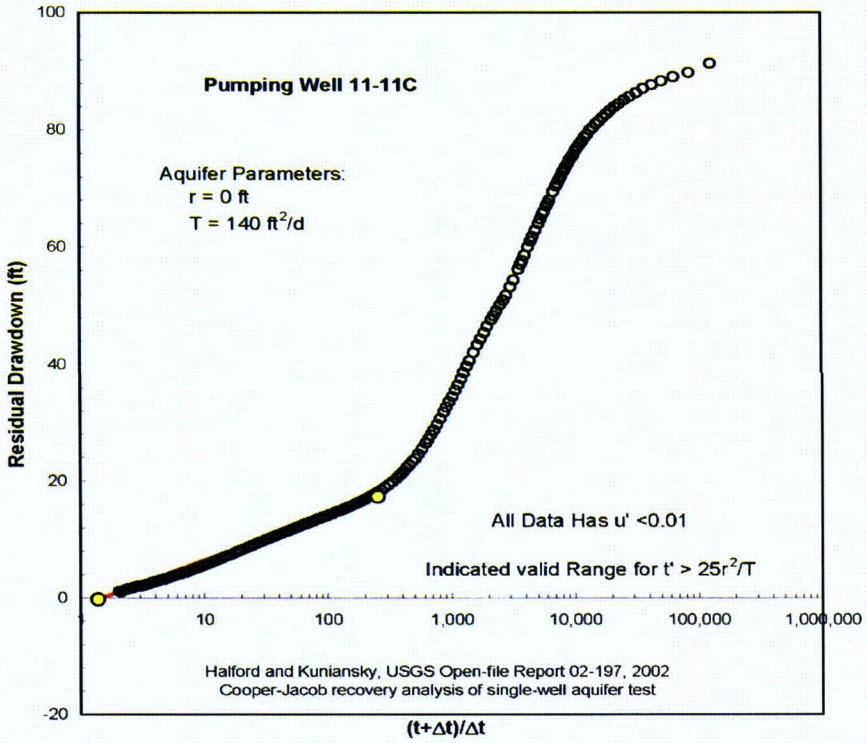

Client	Project	Title	
Knight Piésold CONSULTING	DEWEY-BURDOCK HYDROGEOLOGIC TESTING REPORT	Straight-line Analyses of Drawdown and Recovery at Burdock Pumping Well 11-11C	
	Project No: DV10200279.01	Date: 11/12/08	Figure 5.7

Knight Piésold
CONSULTING

Drawings

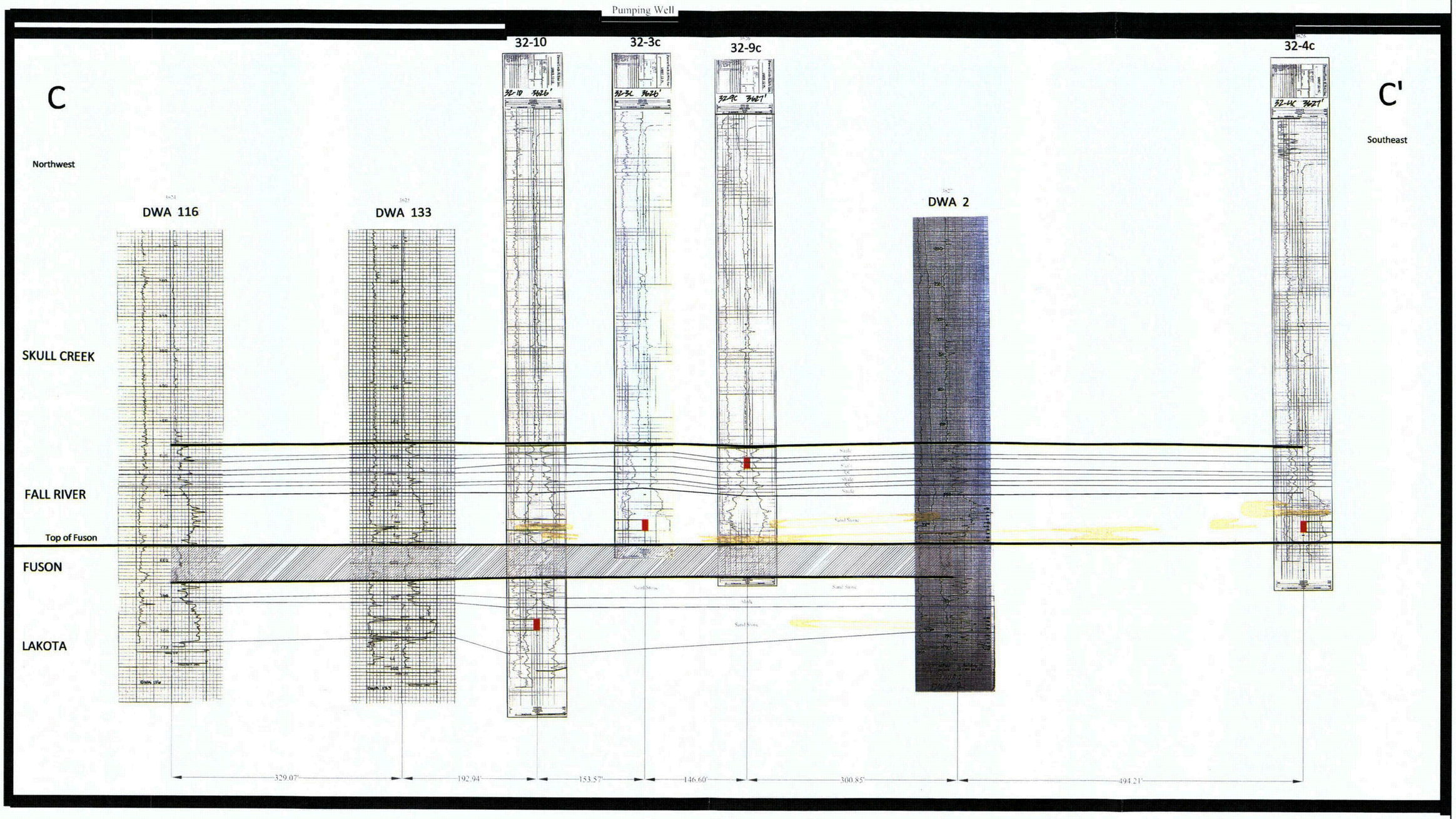

Legend

Screen

Ore

DWA 116 Bore/Well Hole ID

Vertical 1"=60'

Not to Scale

CONSULTANT

REF

CHECK SCALES

If this bar does not measure 1 inch this map is not at its original scale

CONFIDENTIAL
NOT for Reproduction or Distribution
Subject to Revision

REVISIONS

#	DRAWN	CHECKED	APPROVED	DATE

POWERTECH (USA) INC.

DRAWING 4.1
Stratigraphic Cross-Section C-C'
Dewey Pump Test

PLOT DATE	12-Nov-2008	DATE	11-November-2008
DRAWN		CHECKED	F. Lichnovsky
SCALE	1"=60'	FILENAME	c:\powertech\dewey-burdocks cross-sections 11-11-08\dewey pump test c-c' 11-11-08.dwg

PROJECT Dewey Pump Test Drawing 4.1

ADDRESS

Arch D 24" x 36"

1 OF 5

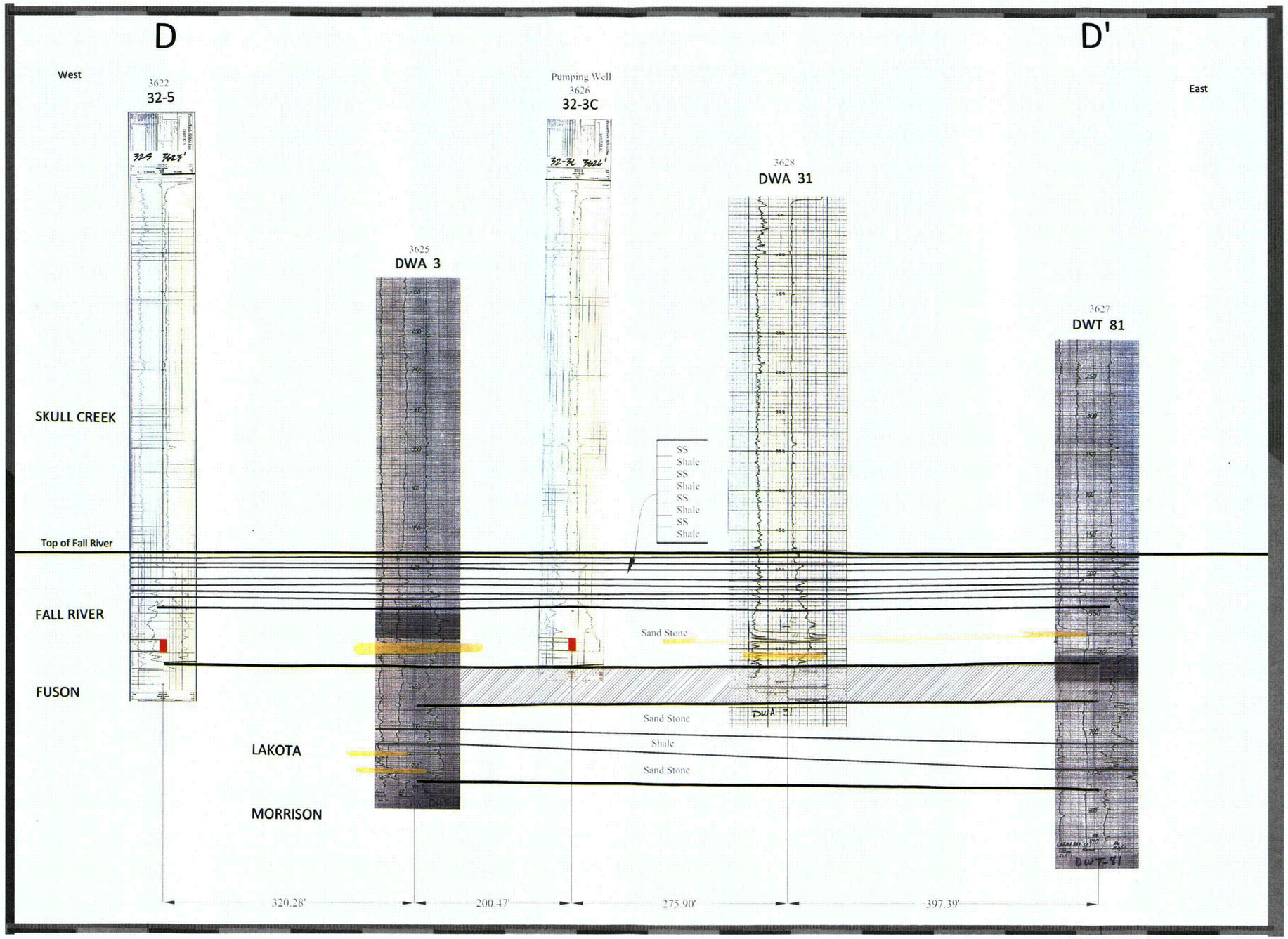

Legend

Screen

Ore

DWA 116 Bore Well Hole ID

Vertical 1"=60'

Not to Scale

CONSULTANT

REF

CHECK SCALES

If this bar does not measure 1 inch this map is not at its original scale

Arch D 24" x 36"

CONFIDENTIAL
NOT for Reproduction or Distribution
Subject to Revision

REVISIONS

#	DRAWN	CHECKED	APPROVED	DATE

PLOT DATE	12-Nov-2008	DATE	11-November-2008
DRAWN		CHECKED	F. Lichnovsky
SCALE	1"=60'	FILENAME	c:\powertech\dewey-burdocks cross-sections 11-11-08\dewey pump test d-d' 11-11-08.dwg

PROJECT Dewey Pump Test

COORDS

2 OF 5

POWERTECH (USA) INC.

DRAWING 4.2
Stratigraphic Cross-Section D-D'
Dewey Pump Test

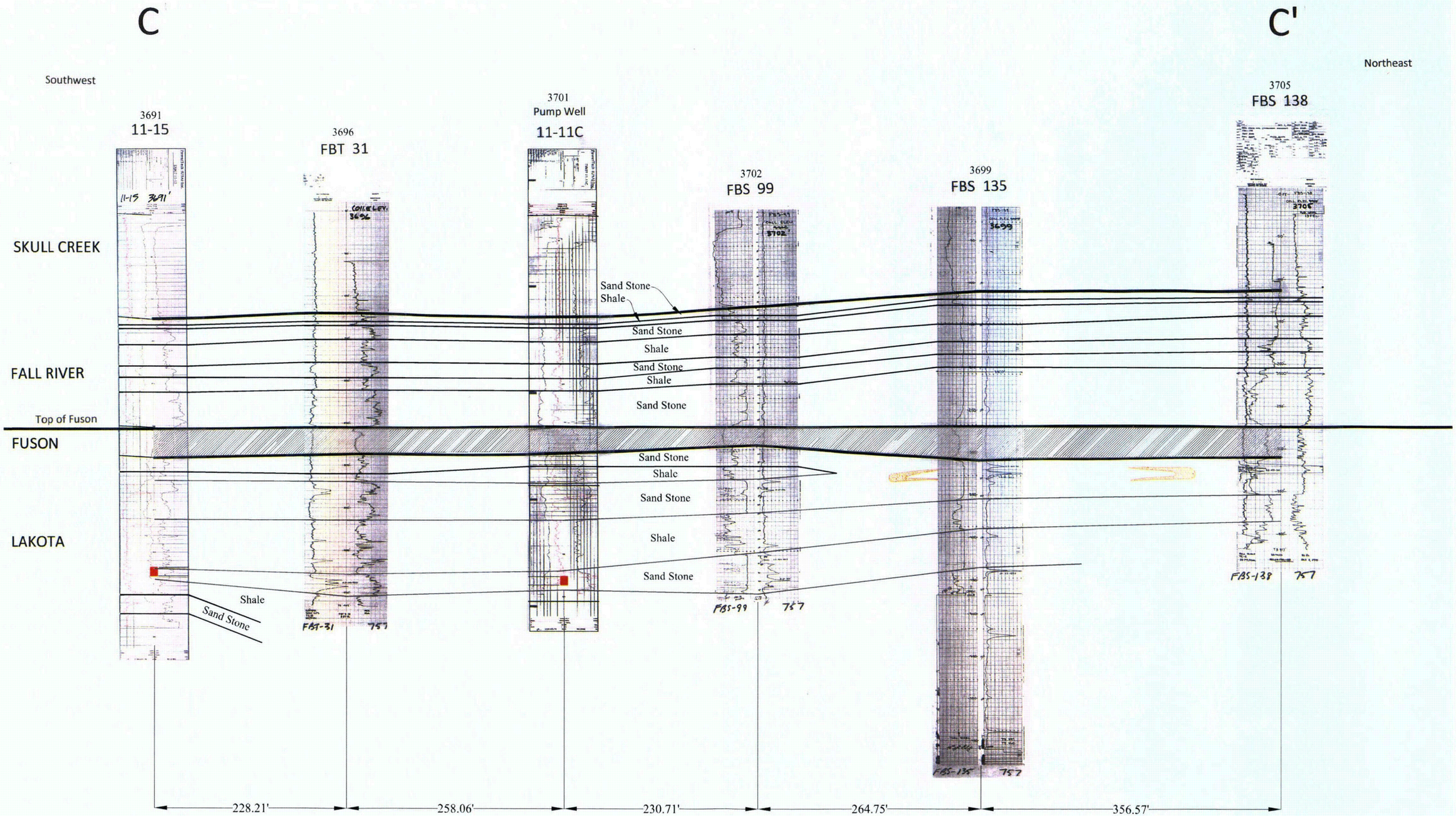

Legend

Screen

Ore

DWA 116 Bore/Well Hole ID

Vertical 1"=50'

Not To Scale

CONSULTANT

REF

CHECK SCALES

If this bar does not measure 1 inch this map is not at its original scale

ANSI D 24" x 36"

CONFIDENTIAL
NOT for Reproduction or Distribution
Subject to Revision

REVISIONS

#	DRAWN	CHECKED	APPROVED	DATE

POWERTECH (USA) INC.

DRAWING 5.1
Stratigraphic Cross-Section C-C'
Burdock Pump Test

PLOT DATE	12-Nov-2008	DATE	12-November-2008
DRAWN		CHECKED	F. Lichnovsky
SCALE	1"=50'	FILENAME	c:\powertech\in south dakota\dewey-burdock\dew_burd x-sections\burd_pump_test strat c-c'.dwg

PROJECT Burdock Pump Test

COORDS

SH 5

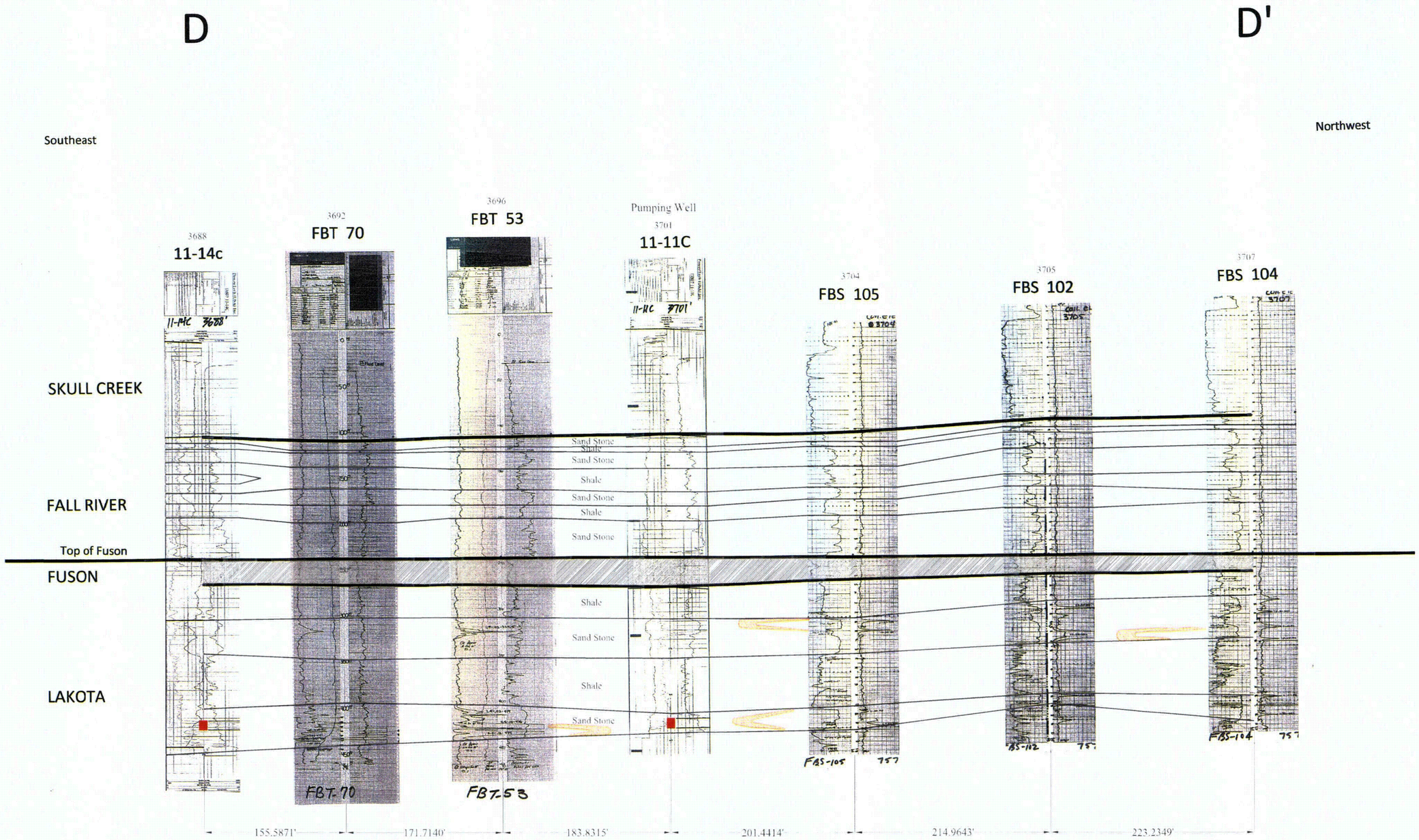

Legend

Screen

Ore

11-14c Bore/Well Hole ID

CONSULTANT

REF

CHECK SCALES

If this bar does not measure 1" inch this map is not at its original scale

Arch D 24" x 36"

CONFIDENTIAL
NOT for Reproduction or Distribution
Subject to Revision

REVISIONS

#	DRAWN	CHECKED	APPROVED	DATE

POWERTECH (USA) INC.

DRAWING 5.2
Stratigraphic Cross-Section D-D'
Burdock Pump Test

PLOT DATE	12-Nov-2008	DATE	12-November-2008
DRAWN		CHECKED	F. Lichnovsky
SCALE	1"=50'	FILENAME	c:\powertech\dewey-burdocks cross-sections 11-11-08\burdock pump test d-d' 11-12-08.dwg

PROJECT: Burdock Pump Test

COORDS:

4 OF 5

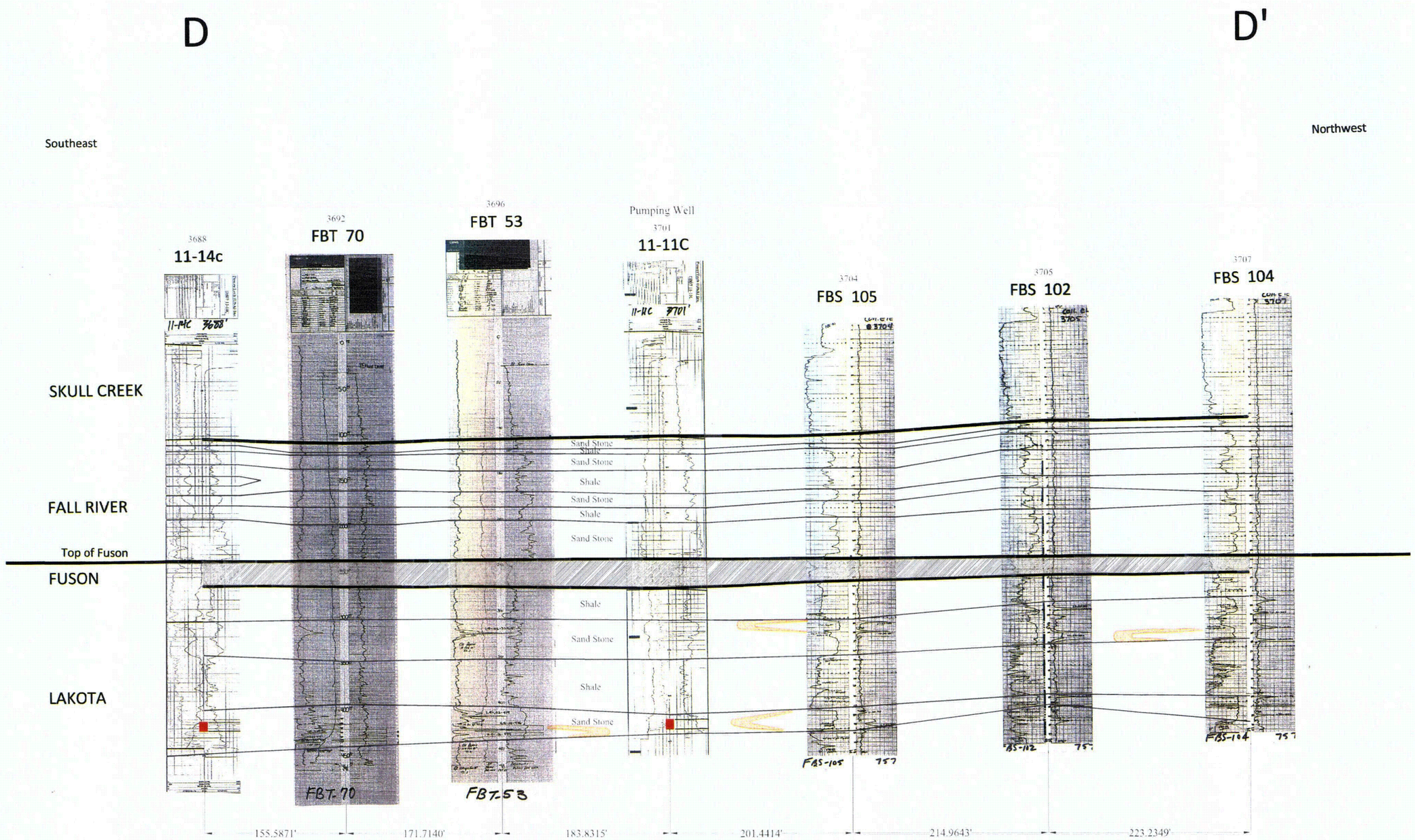

Legend

Screen

Ore

11-14c Bore/Well Hole ID

Vertical 1"=50'

CONSULTANT

REF

CHECK SCALES

If this bar does not measure 1 inch the map is not at its original scale

Arch D 24" x 36"

CONFIDENTIAL
NOT for Reproduction or Distribution
Subject to Revision

REVISIONS

#	DRAWN	CHECKED	APPROVED	DATE

POWERTECH (USA) INC.

DRAWING 5.2
Stratigraphic Cross-Section D-D'
Burdock Pump Test

PLOT DATE	12-Nov-2008	DATE	12-November-2008
DRAWN		CHECKED	F. Lichnovsky
SCALE	1"=50'	FILENAME	c:\powertech\dewey-burdocks cross-sections 11-11-08\burdock pump test d-d' 11-12-08.dwg

PROJECT: Burdock Pump Test

COORDS:

4 OF 5

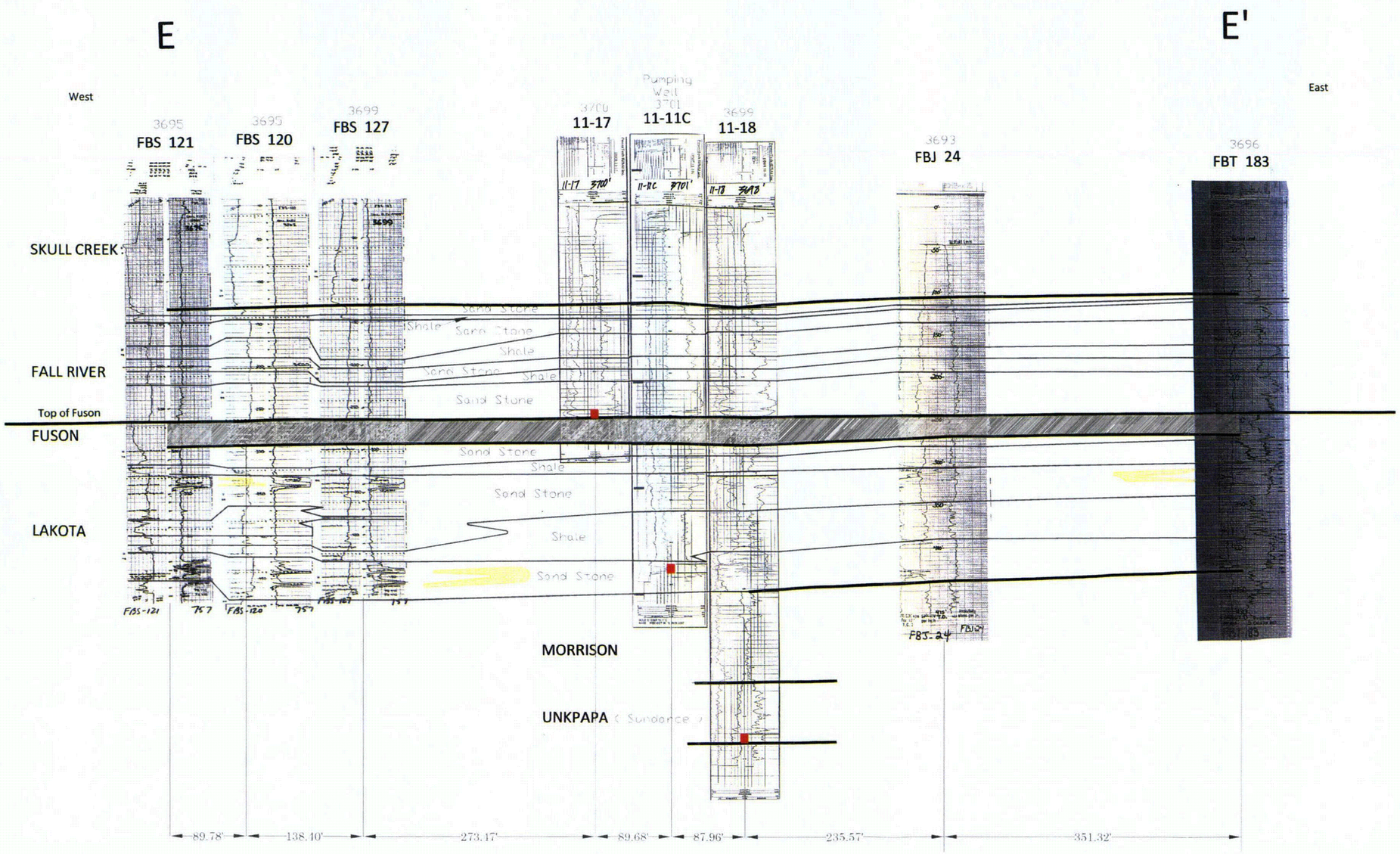

Legend

Screen

Ore

FBS 121 Bore/Well Hole ID

Vertical 1"=60'

Not To Scale

CONSULTANT

REF

CHECK SCALES

If this bar does not measure 1 inch the map is not at its original scale

Arch D 24" x 36"

CONFIDENTIAL
NOT for Reproduction or Distribution
Subject to Revision

REVISIONS

#	DRAWN	CHECKED	APPROVED	DATE

PLOT DATE	12-Nov-2008	DATE	12-November-2008
DRAWN		CHECKED	F. Lichnovsky
SCALE	1"=60'	FILENAME	c:\powertech\dewey-burdocks cross-sections 11-11-08\burdock pump test e-e' 11-12-08.dwg

POWERTECH (USA) INC.

DRAWING 5.3
Stratigraphic Cross-Section E-E'
Burdock Pump Test

PROJECT Burdock Pump Test

COORDS

5 OF 5

Knight Piésold
CONSULTING

Appendix A
Additional Information and Analysis Procedures

Appendix A-1:	Background Monitoring and Barometric Efficiency Calculations
Appendix A-2	Overview of Aquifer Test Analysis Procedures and Tools Used

Knight Piésold
CONSULTING

Appendix A-1

Background Monitoring and Barometric Efficiency Calculations

Background Monitoring and Barometric Efficiency Calculations

Pressure transducers were installed in both wells at both sites by April 2, 2008 in order to obtain background ground water level measurements. At the Burdock test site, a transducer was installed in the designated pumping well (DB07-11-11C) in the lower Lakota Formation. At the Dewey test site, a transducer was installed in observation well (DB07-32-4C), screened in the same zone as the pumping well in the lower Fall River Formation.

Figure 3.1 in the text illustrates background measurements before the pumping tests and also the sequence of subsequent test events. The left axis of the figure indicates a narrow range of 1 psi. The background measurements shown on the figure fluctuate over a range of about 0.4 psi.

Converting Pressure Measurements to Head

Pressure transducer psi coverts directly to head [feet of water overlying the transducer] according to the relationship:

$$\begin{aligned} \text{Head } [\text{ft}_{H20}] &= P\,[_{PSI}] \times 144\ \text{in}^2/\text{ft}^2 \div \gamma_{H20}\ [\text{pounds per cubic foot}] \\ &= P\,[_{PSI}] \times 144/62.48 \\ &= P\,[_{PSI}] \times 2.31 \end{aligned}$$

Where γ H_2O [pounds per cubic foot] is the unit weight of water, ignoring temperature effects.

Therefore, a change in transducer pressure (Δpsi) corresponds to a change in water level of about 2.31 [ft $_{H20}$] x Δpsi with the same sense of increase or decrease. Total variations in background changes in groundwater levels over the one month period of record on Figure 3.1 (in the text) thus correspond to about 0.9 feet of water, which could be significant, although it will be established that such background variations over the time of a pump test do not significantly affect interpretations of the tests.

As indicated on Figure 3.1 (in the text), more than one month of background measurements were obtained from April 8 to May 9, 2008. However, this was also a period when pump installation and testing produced temporary drawdowns where the psi readings dropped below the scale of the figure.

The right hand axis on Figure 3.1 (in the text) illustrates hourly barometric pressure measurements in millibars obtained from the meteorological station installed at the site. The site station is maintained by South Dakota State University (SDSU) at the following URL: "http://climate.sdstate.edu/awdn/edgemont/archive3.asp". Barometric pressure reported by SDSU data is available only in the hourly dataset.

Barometric and Other Water Level Corrections

A period of about two weeks (April 23 to May 8, 2008) after pump installation and initial testing was designated as a period for undisturbed background water level monitoring in order to obtain data for possible barometric corrections. Inspection of Figure 3.1 (in the text) finds the expected inverse relationship between site barometer readings and increases or decreases in ground water levels. There are also smaller order cyclic sinusoidal variations which occur twice daily attributable to lunar tidal cycles.

Two types of barometric and other water level corrections were employed as described separately below.

Manual Barometric Efficiency Corrections

The first correction was manually evaluating the data based on total head (i.e., the transducer psi reading) and correcting the values to the barometric pressure (i.e., barometer millibars converted to psi) trends throughout the test. Kruseman and de Ridder (1991) and Gontheir (2007) state that the barometric efficiency (BE) can be defined as the change in water level in a well versus a change in atmospheric pressure, as follows:

$$BE = \gamma \ H_2O \text{ [pounds per cubic foot] x } \Delta h_w \div \Delta P_a$$

Where Δh_w is the change in elevation in the well associated with atmospheric pressure change (exclusive of other simultaneous effects that may also induce a change) and ΔP_a is the change in atmospheric pressure at the top of the well and land surface. By convention, the BE is dimensionless and ranges from zero to one.

Measurable water level changes in a well may also be due to a number of other factors in addition to changes induced during a pumping test. These are chiefly long-term seasonal trends and earth tides (Halford, 2006). Gontheir (2007) describes the historical methods of determining barometric efficiency. The methods can generally be said to determine an average response with selective application of corrections depending on the overall trends. The methods employ best fit lines to graphical displays of data and numerical

analysis of the data sequence with sign tests to determine when a change is significant and should be applied.

The Site barometer readings were interpolated to the 15 minute background water level data using a custom FORTRAN computer method described in Section 1.3, below. A spreadsheet calculation was used to determine BE corrections throughout the background measurement period from April 23 to May 26. The results for the Dewey Site/Fall River aquifer are shown in Figure A.1-1 and the Burdock Site/Lakota aquifer in Figure A.1-2. The empirical method also determines a trend of rising water levels throughout the calibration period. Corrections for earth tides were not employed because these have demonstrably small amplitudes (i.e., 0.05 psi = 0.1 ft) below the limit of transducer accuracy. The figures illustrate that, after correction for the seasonal increase in water levels, BE's of 0.48 and 0.42 are determined for the Dewey and Burdock sites, respectively.. It is noted that the barometer data on the right hand side of Figures A.1-1 and A.1-2 are scaled in reverse order to invert the data and allow superimposition of air pressure trends with ground water levels, as presented in Kruseman and de Ridder (1991).

Computer Applications

Two public domain computer applications were used to analyze the barometric and background water level data collected prior to the pumping tests. However, it was determined that use of either method for correction of actual test drawdown data could introduce more error than working with uncorrected data because background water level variations in the same aquifer at the same time as the test (but at great enough distance to be unaffected by the tests) were not available to validate the correction methods.

The first is a spreadsheet developed by the U.S. Geological Survey (USGS – Halford, 2006). The USGS spreadsheet empirically factors the overall water level response into multiple synthetically generated time series with adjustments to both phase and amplitude of each component (Figure A.1-3). The USGS spreadsheet was used to verify that the Dewey background water level data from April 23 to May 8, 2008, could be closely matched as a series of four components: (1) water level increase at a liner rate [i.e., slope], (2) variation in air pressure as measured with the site barometer, (3) two earth tide components (Figure A.1-4).

The second computer method used is BETCO (Sandia Corporation, 2005), which is publically available at "http://www.sandia.gov/betco/". To correct data, water level, time

and barometric pressure are input and BETCO calculates corrected water level values. As described under Section 1.3 "Data Processing" below, the hourly site barometer data were interpolated to the 15 minute water level measurement frequency. Figure A.1-1 compares the BETCO corrected water levels (as equivalent psi) with the manual BE calculations, and the two methods yield equivalent results, generally within about ± 0.01 psi, except that BETCO did not fully correct the water level for the peak (actually a trough with the vertical axis reversed) in barometric pressure at the middle of the calibration period (i.e., about April 30, 2008, Figure A.1-1).

Summary

As shown in Figure A.1-1, the manual BE method was better than the BETCO computer method for the background calibration period examined. Similar to the USGS method, a difficulty with applying BETCO corrections to the Dewey or Burdock tests is that background wells with similar construction to the pumping test wells are not available to validate the corrections. This would have required drilling a well at each site specifically for background measurements. A further difficulty with the available computer methods is that they do not easily accommodate variable measurement times as input data.

To examine the possible importance of BE corrections, the drawdown phase of the Dewey test (10:30 AM, May 15, 2008 through 12:30 PM May 18, 2008, see Figure 3.1 in the text) was selected for manual correction with a BE of 0.48 relative to the Site barometer over the test period. The corrections were applied after Site barometer data were interpolated to the logarithmically-space time-drawdown data using a custom FORTRAN computer program as described in Section 1.3, below. The maximum effect of the BE correction was to add about 0.2 ft to the water levels at the end of the drawdown phase due to an overall barometric pressure decline of about 15 millibars (i.e., from about 1,030 to 1,015 millibars).

Test interpretations (Theis drawdown, Section 4 in the text) were made with and without the BE corrections for the data at all wells screened in the Fall River aquifer for the Dewey test, and the corrections were found to have no discernable effect on the visual fits to type curves. Because the changes in barometric pressure during the three day constant rate tests at Burdock and Dewey were similar (Figure 3.1 in the text), the above analysis indicates the magnitude of the BE corrections would be no greater for the Burdock test compared to the Dewey test. Therefore, corrections to water level data were not further performed and the test interpretations rely on uncorrected time-drawdown data.

Time-drawdown and Barometer Data Processing

The time-drawdown data from the data loggers consisted of two hours of data at one second intervals followed by 72 or 74 hours of data collected at 10-second intervals, with the sequence repeated for the recovery phase. The WinSitu™ software exported transducer data logger records to ".csv" files with approximately 60,000 to 70,000 records for each well. The time-drawdown data were processed using a custom FORTRAN program employing a template file specifying which date-time records would be written to an output file. The program cycled through the raw data input file and wrote data records to the output file. The template file was prepared to produce logarithmically spaced data with about 30 records per log cycle (in seconds). Due to slight variations in transducer output and the precision of the Microsoft Excel date-time format, there are some ± 1 second variations in the sequences of records from well to well.

The FORTRAN program for drawdown data also converted transducer psi to drawdown in feet using formulas presented in Section 1.1. The reference value for zero drawdown was set to be the average of all psi readings from the start of the data log to the time just prior to test startup.

Two custom FORTRAN programs were also used to interpolate hourly site barometer readings to (1) the evenly spaced background transducer measurements described in Section 1.2.2 and (2) the logarithmically spaced drawdown data described in Section 1.2.3.

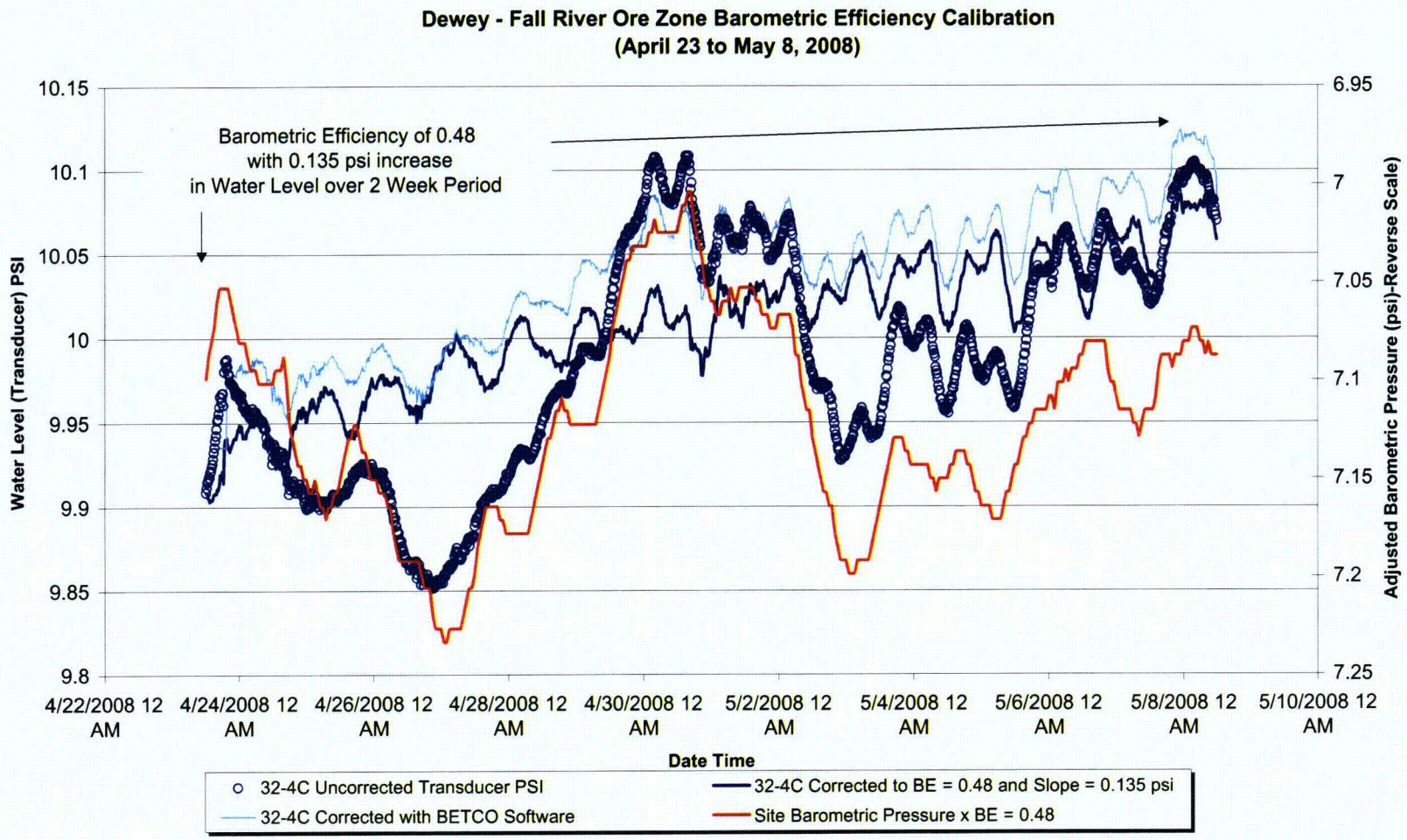

Client	Project	Title	
Knight Piésold CONSULTING	DEWEY-BURDOCK HYDROGEOLOGIC TESTING REPORT	Background Water Level and Site Barometer Readings Dewey/Fall River Barometric Efficiency Calculations (April 23 to May 8 2008)	
	Project No: DV10200279.01	Date: 10/14/08	Appendix A, Figure A.1-1

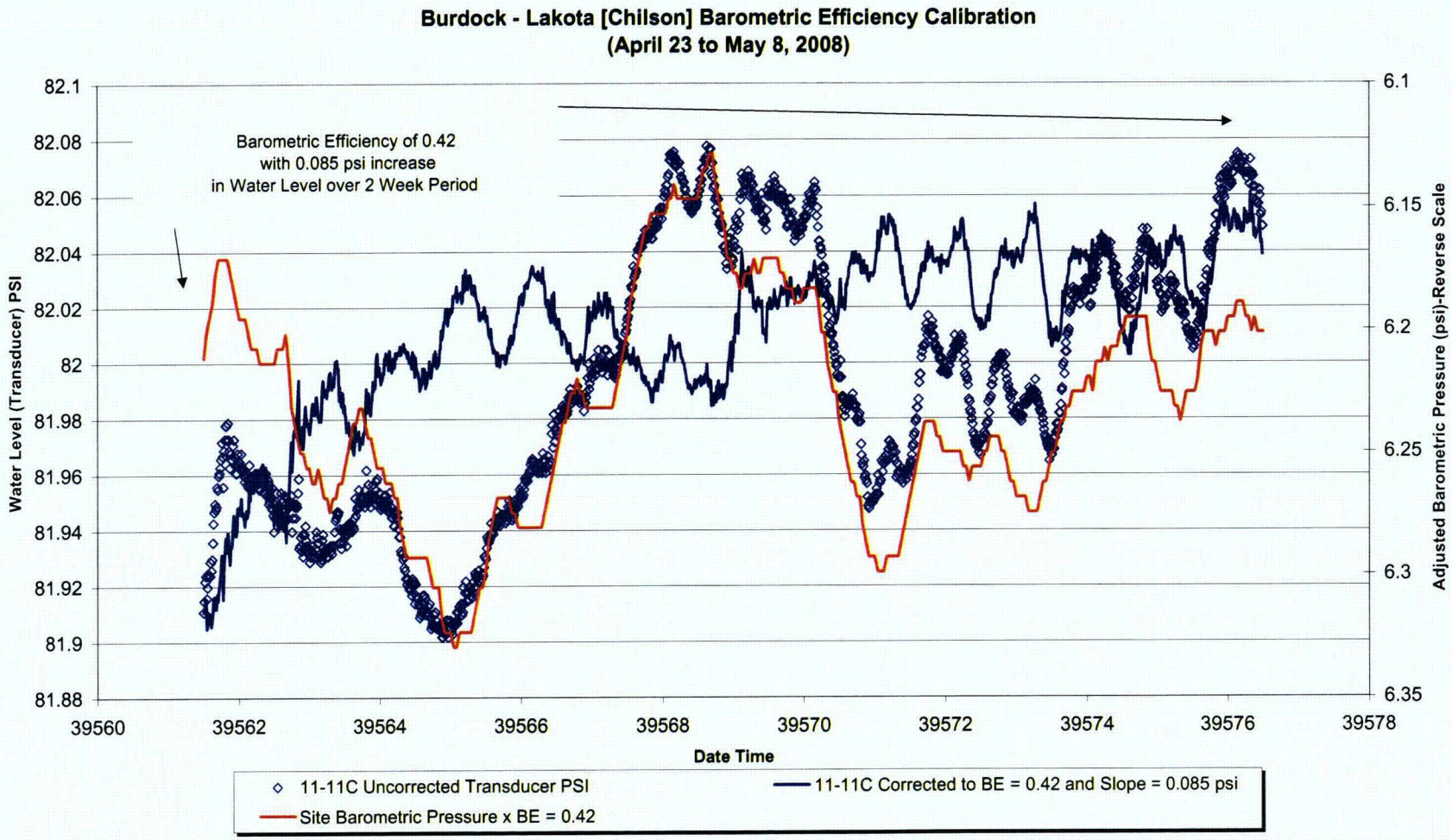

Client	Project	Title	
Knight Piésold CONSULTING	DEWEY-BURDOCK HYDROGEOLOGIC TESTING REPORT	Background Water Level and Site Barometer Readings Burdock/Lakota Barometric Efficiency Calculations (April 23 to May 8 2008)	
	Project No: DV10200279.01	Date: 10/14/08	Appendix A, Figure A.1-2

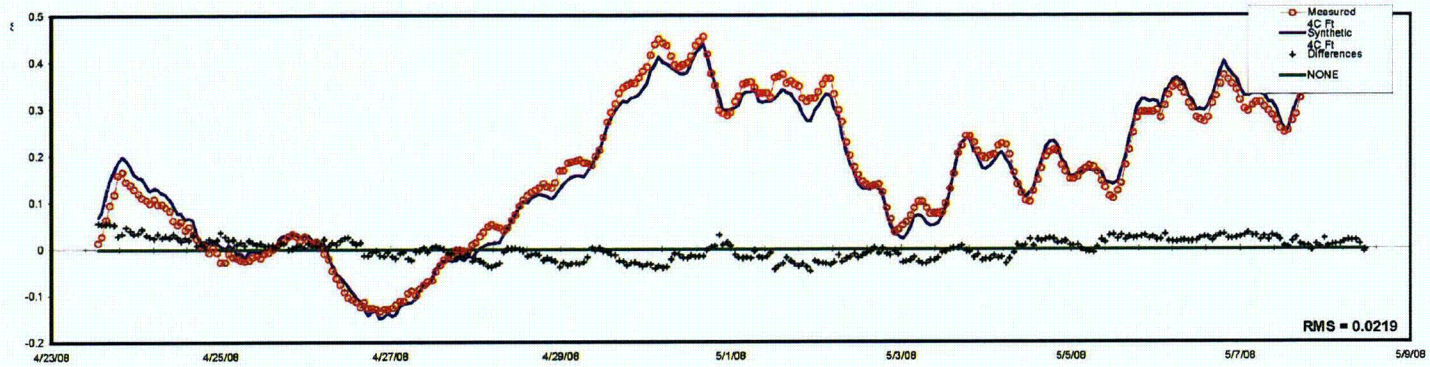

Series Comparison

Time Overview

Phase Increment:	50
Phase Limit:	48:00
Moving Average:	24:00

AVERAGE = 0.000
RMS = 0.022
☑ Save Solutions on Estimation
☑ Initialize parameters on LOAD

NEW

Result: TIME SERIES
Analyze: 4C Ft
FIT
Offset: 0.0054
Slope: ☑ 0.0193

LOAD	FITTING	ESTIMATION	FEEL GOOD
Begin:	04/23/2008 12:25	04/23/2008 12:25	04/23/2008 12:25
End:	05/08/2008 11:55	05/08/2008 11:55	05/08/2008 11:55
Interval:	01:00	01:00	01:00
Samples:	359	359	359
Phase Shift:	☑ 0.0191	☑ -0.1390	☑ 0.1979
Multiplier:	☑ -0.0160	☑ 0.0013	☑ -0.0005

DATE-time	Measured 4C Ft	Synthetic 4C Ft	Differences	NONE	Baro2(Raw)	EarthTide	GravityTide	NONE
04/23/2008 13:10:45	0.014	0.070	0.056	0	0.12	-0.026283855	-0.030282086	
04/23/2008 14:10:45	0.028	0.081	0.053	0	0.14	-0.030098538	-0.034381662	
04/23/2008 15:25:45	0.065	0.119	0.055	0	0.17	-0.02678559	-0.034150371	

Client	Project	Title	
Knight Piésold CONSULTING	DEWEY-BURDOCK HYDROGEOLOGIC TESTING REPORT	Time-series from USGS Spreadsheet Method (Halford, 2006) for Dewey Observation Well 32-4C Background Measurements and Site Barometer Readings (April 23 to May 8 2008)	
	Project No: DV10200279.01	Date: 10/14/08	Appendix A, Figure A.1-3

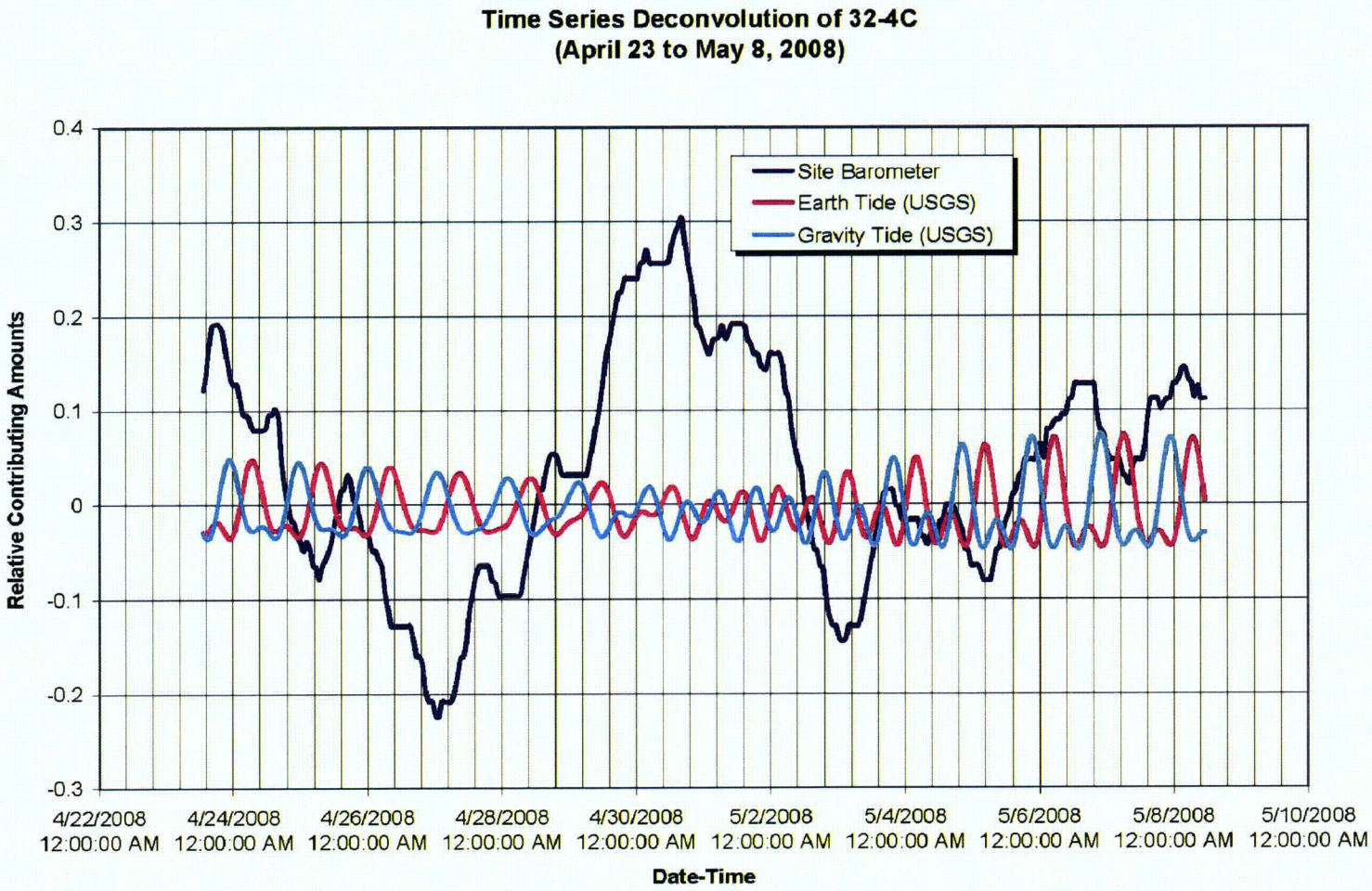

Client	Project	Title	
Knight Piésold CONSULTING	DEWEY-BURDOCK HYDROGEOLOGIC TESTING REPORT	Plotted Time-series Output for Dewey Observation Well 32-4C Background Measurements and Site Barometer Readings (April 23 to May 8 2008)	
	Project No: DV10200279.01	Date: 11/12/08	Appendix A, Figure A.1-4

Knight Piésold
CONSULTING

Appendix A-2

Overview of Aquifer Test Analysis Procedures and Tools Used

Overview of Aquifer Test Analysis Procedures and Tools Used

This section describes the methods used to analyze the pump test data from both the Dewey and Burdock tests.

Determining Response

Water levels in each well were measured and recorded with vented In-Situ™ Level TROLL™ pressure transducers with built in data loggers. The pressure ratings for the transducers range from 100 to 300 pounds per square inch (psi). Transducer accuracy (in comparison to known pressure or other pressure reading devices) is stated by the manufacturer to be ±0.1 percent of full-scale reading (i.e., 100 to 300 psi), so the limit of accuracy varies from 0.1 to 0.3 psi, or about 0.2 to 0.7 ft. Transducer sensitivity is stated to be ±0.01 percent of full-scale, resulting in sensitivity limits of about 0.01 to 0.03 psi, or 0.02 to 0.07 ft.

Transducer response figures in the text (Figures 4.2 through 4.4 at Dewey and Figures 5.2 through 5.4 at Burdock) were made from graphs displaying raw transducer data produced directly from Win-Situ™ software provided by In-Situ with the rental transducers. The software should be publically available and can be used to read the binary data files that are provided on CD-ROM in Appendix E. The WinSitu™ software exported transducer data logger records to ".csv" text files with approximately 60,000 to 70,000 records for each well.

The Win-Situ graphs display complete drawdown and recovery data files that exceed the capacity of individual spreadsheets for display and storage. The pumping well data are repeated on some figures for reference as timing marks for the phases of the tests. The data at observation wells also exhibit spikes in the transducer temperature measurements when the data logging shifted from 10 second to 1 second intervals; these can be used to judge within ± 2 hours when the pump was shut off and recovery began at the pumping well.

Precise timing of responses is more clearly analyzed on spreadsheet log-log plots after the data are reduced to 30 points per log cycle (in seconds). The computer method to reduce the large text file to manageable time-drawdown data files is described in Section A.1-3 (above).

Theis Drawdown and Recovery Analysis

Drawdown data collected from all wells were graphically analyzed to determined aquifer properties of transmissivity and storativity using the Theis method (Driscoll, 1986, and numerous other references).

Assumptions for the Theis Method

At observation wells, the Theis method is mathematically valid for all distances and times during the drawdown phase of a test, and there is general agreement about interpretation of deviations of drawdown data from Theis type curves in terms of features such as barrier boundaries and leakage from an overlying leaky aquifer (Kruseman and de Ridder, 1991).

The following simplifying assumptions underlie the Theis analysis (Driscoll, 1986):

- The water-bearing materials have uniform hydraulic conductivity (i.e., are isotropic) within the radius of influence of the well (i.e., the aquifer has infinite extent for the analysis).
- The aquifer is confined and not stratified.
- The aquifer thickness is constant.
- The pumping well is 100 percent efficient.
- The intake portion of the well penetrates the entire aquifer; well diameter is small so well bore storage is negligible.
- The potentiometric surface has no slope (perfectly horizontal).
- Laminar flow exists throughout the radius of influence of the well.

These assumptions are rarely completely satisfied in any pumping test. A first-order violation of the ideal test assumptions for the Powertech pumping test is partial penetration: at Dewey, the lower Fall River pumping and observation wells have 15-foot well screens within an approximate 85-foot sandstone zone within an approximately 160-foot thick sandstone-shale formation; at Burdock the lower Lakota pumping and observation wells have 10-foot well screens within an approximate 35-foot sandstone zone within an approximately 170-foot thick sandstone-shale formation

Secondly, the variegated sandstone-shale lithology clearly responds hydraulically in an anisotropic manner both laterally and vertically. It was determined with Powertech during the test design that an investigation of lateral aquifer anisotropy using four-well

triangulation was not warranted. The test design did investigate vertical anisotropy within each aquifer.

Pumping Test Design and Objectives

As noted in the pumping test work plan, (Knight Piesold, 2008), interpretation of test results with the above non-ideal conditions may result in uncertainties in the estimated transmissivity and storativity values. Reasons for conducting the 2008 tests with conditions contrary to the Theis assumptions were as follows:

- Powertech expects that the operational well field screens will be completed in ore, and the thickness of the ore determines the screen interval.
- The pump test was designed to see what flow could be expected in the wellfield.
- There are multiple ore zones (e.g., three ore zones in the Fall River at Dewey) and each one will have its own well screens, so one ore zone was picked to test.
- At new mines there are usually two pump tests, one to get regional aquifer characteristics and a second one to test the ore zone characteristics.
- The previous TVA tests constitute regional tests and had already been successfully conducted using pumping and observation wells more closely fully penetrating the entire aquifer.
- In comparison with the TVA tests, these newer tests would offer valuable differential diagnostic information.

Theis Analysis Methods

Theis analysis was initially performed in spreadsheets developed by Knight Piesold that allow interactive entry of transmissivity and storativity to calculate the dimensional version of the type curve that matches time-drawdown data (e.g., Figures 4.5 and 5.5 in the text). Theis analysis was expanded to use using automated curve matching in commercial AquiferWin32^{TM} software (ESI, 2003). The software also performed Hantush-Jacob drawdown analysis as described in the text. In automated drawdown analysis samples are weighted as follows: samples before the first response are ignored, and samples after the first occurrence of the barrier or leakage boundary are ignored.

The AquiferWin32^{TM} software was also used to analyze recovery data with the straight-line Theis recovery procedures, with theoretical considerations described in greater detail below. Samples are weighted according to (1) the theoretical criterion that u' be < 0.01, which restricts the data to later-time (to the left on the t/t' axis); and (2) the portion of the recovery before the change in slope due to a barrier or recharge boundary is used. Data

not satisfying u' < 0.01 or obtained after a boundary was encountered were weighted to be ignored.

The analysis of data from the pumping wells is complicated by well losses due to well inefficiency, partial penetration effects, and drawdown modified by borehole storage. This is accounted for in Theis drawdown analyses by fitting just the later time data (at pumping wells) to the type curve. This is done with the AquiferWin32™ software by assigning sample weights to data after the time at which borehole storage becomes negligible.

Driscoll (1986) provides an empirical formula for determining the time at which borehole storage effect become negligible, as follows:

$$tc = 0.6\ (dc^2 - dp^2) \text{ divided by } Q/s$$

Where tc is time in minutes, dc is the inside diameter of the well casing in inches, dp is the outside diameter of the pump column pipe in inches, and Q/s is the specific capacity of the well in gpm per foot of drawdown at time tc. Calculated times were 21 minutes for the pumping well at Dewey and 50 minutes at Burdock.

Theis-Cooper-Jacob Straight-line Analysis

Spreadsheets are published by the U.S. Geological Survey (USGS) with sophisticated programming for the analysis of aquifer test data (Halford and Kuniansky, 2002). These were used for most straight-line analyses of the tests.

Straight-line Drawdown Analysis

A USGS spreadsheet for drawdown analysis with the Cooper-Jacob straight-line approximation was used for the drawdown phase at the pumping wells. Another USGS spreadsheet programmed for Theis Recovery analysis with the straight-line approximation was used to analyze the recovery data at all wells.

The Theis method is linearized with the Cooper-Jacob straight-line approximation (Halford and Kuniansky, 2002). The approximation is only valid at later times as determined by u or u', the relationship of aquifer parameters with distance from the pumping well (r) and elapsed time t or t' (where t and u refer to the time from the start of pumping and t' and u' to the time from the cessation of pumping), as follows:

$$u \text{ or } u' = (r^2 \times S) \div [4 \times T \times (t \text{ or } t')] \text{ and } \quad u \text{ or } u' < 0.01.$$

For a pumping well the distance becomes the radius of the casing (r_c) which is small, and to obtain a time criterion (t_c or t_c' where the straight-line approximation is theoretically valid), the above relationship is inverted by setting u or u' <= 0.01 and S = 1 x 10^{-4}, yielding (Halford and Kuniansky, 2002):

$$4 \times (t \text{ or } t') \times 0.01 >= r_c^2 \times 10^{-4} \div T$$
$$t_c \text{ or } t_c' >= 100 \times r_c^2 \div (4 \times T)$$
$$t_c \text{ or } t_c' >= 25 \times r_c^2 \div T$$

The calculation of t_c or t_c' gives a criterion for theoretically valid data at the pumping well in terms of time, and similarly for u or u' for observation wells. In this report only transmissivity is determined by the straight-line methods. The drawdown phase and Theis or Hantush-Jacob type-curve analysis are used to determine storativity. To calculate u or u' at observation wells, the storativity result from the drawdown phase is used. At the pumping wells, a storativity of 1 x 10^{-4} is assumed.

The USGS spreadsheet allows interactive determination of transmissivity by moving the yellow endpoints of the red line to match the desired slope (see red lines between yellow endpoints on Figures 4.7 and 5.7 in the text). The USGS spreadsheet has been modified to also calculate the value of u or u' and t_c or t_c', and the length of the straight line has been manually set on the figures to approximately correspond to data ranges where the critical values are met. The figures thus indicate the data where the straight-line solutions are theoretically valid, which aids in visually determining which portions of the plots to use for analysis.

The analysis of data from the pumping well is complicated by well losses due to well inefficiency, partial penetration effects, and drawdown modified by borehole storage. The straight-line approximation with the t_c criterion described above is used in the USGS spreadsheet to select the late-time data during the drawdown phase at pumping wells. This is because at later times borehole storage and partial penetration effects are eliminated and change in drawdown and the straight-line slope are due to aquifer transmissivity rather than the fixed offset due to well losses (Halford and Kuniansky, 2002). The USGS spreadsheet determines transmissivity and well efficiency, with the efficiency based on the theoretical drawdown with the assumed storativity of 1.0 x 10^{-4}.

Straight-line Recovery Analysis

The analysis of recovery data involves the measurement of the rise in water levels referred to as residual drawdown. The method determines the $\Delta s'$, the change in residual drawdown over one log cycle of t/t', where t is the time from the start of pumping and t' is the time from the cessation of pumping. Figures 4.7 and 5.7 in the text illustrate the Theis recovery analysis at the pumping wells. On each recovery analysis figure the data range where the t_c' or u' criteria is satisfied (see red lines between yellow endpoints on Figures 4.7 and 5.7 in the text) are indicated together with the transmissivity reported by the USGS spreadsheet.

Distance Drawdown Analysis

Distance-drawdown analysis (Driscoll, 1986) was performed to determine average aquifer parameters using all appropriate observation wells simultaneously and also to determine a pumping well efficiency. The distance drawdown analysis relies on the same Cooper-Jacob straight-line approximation as described above, although according to Driscoll (1986) the value of u can be as great as 0.05. The value of u is calculated using the storativity of the observation wells determined in the Theis drawdown analysis. The aquifer parameters are determined by calculating Δs, the change in drawdown along the straight line over one log cycle, and r_0 which is the intercept at zero drawdown.

On a linear graph (see top portions of Figures 4.8 and 5.8 in the text), plotting the maximum drawdown in observation wells at the same time should map a profile of the cone of depression surrounding the pumped well. On a semi-log graph (bottom portions of Figures 4.8 and 5.8 in the text) there should theoretically be a straight line through the data points, except at the greatest distance from the pumping well where u is likely to be > 0.05 (Driscoll, 1986).

Knight Piésold
CONSULTING

Appendix B
Dewey Test Supplemental Information

Appendix B-1:	Well Completion Diagrams
Appendix B-2:	Time and Water Level Data Values Used in Pumping Test Analysis: Dewey Test, Drawdown Data
Appendix B-3:	Time and Water Level Data Values Used in Pumping Test Analysis: Dewey Test, Recover Data
Appendix B-4:	Additional Aquifer Parameter Determinations

Knight Piésold
CONSULTING

Appendix B-1
Well Completion Diagrams

POWERTECH WELL AND PUMP DATA

Location of Well Dewey, SD	Drilling Contractor Davis Drilling	Driller Tony	Well Name DB07-32-3C
County Custer	Type of Rig	Drilling Fluid mud	Well Depth 600'
LAT 4815593N	LONG 578732E	Elevation 3635"	Datum point from which all measurements are taken

Screened Monitoring Well Completion Detail

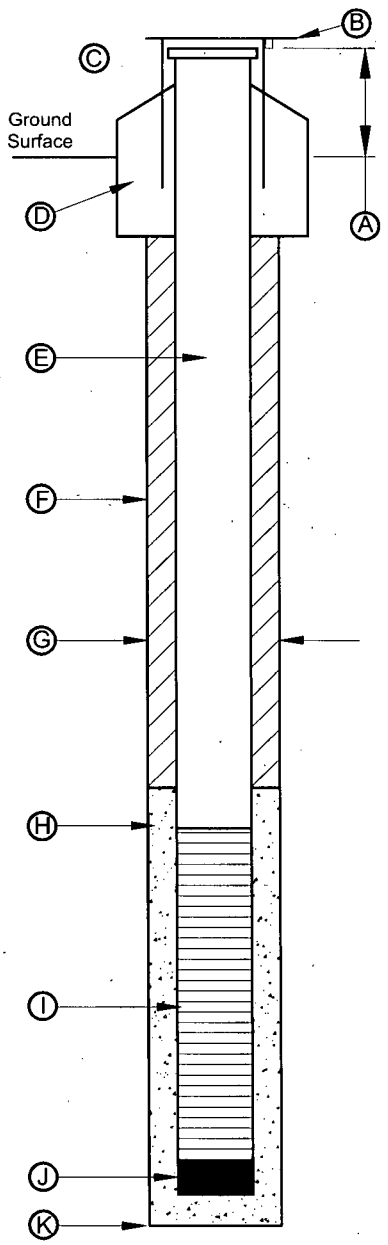

Screened Well No.

A. Stick-up Length 2.0'
B. Key No. NA
C. Protective Casing
Diameter NA
Material NA
Length NA
Depth to Bottom NA
D. Surface Completion
Diameter NA
Depth NA
Material NA
E. Well Casing Data
Diameter 6" ID
Material PVC
Length 587'
Weight SCH 40
Depth to Bottom 585'
F. Grout cement Date 11/29/07
Depth to Top 0'
Depth to Bottom 587'
Material sulfate resis. cement
Density 15.1 lb/gal
Volume 21.5 bbls
% Excess 70
Method of Installation displacement
Depth to Cement in Casing 505'
Return Constant ☐ Yes ☒ No
Volume of Grout Return 0
G. Borehole Diameter
Drilling Dates 8.75" 11/28/07
H. Pack Type/Size NA Date NA
Depth to Top NA
Depth to Bottom
Material
Method of Installation
Gradation
I. Screen Date 1/27/08
Depth to Top 585-600"
Depth to Bottom
Manufacturer
Material PVC
Slot .01"
J. Bottom Cap
Material PVC
Length 1"
Driller Tommy
Boring Depth 630"

Additional Information

Method of Drilling Date: 11/27/07
☐ Cabel Tool ☐ Hollow Rod
☒ Direct Rotary ☐ Air Rotary
☐ Bucket Auger ☐ Reverse Rotary
☐ Flight Auger ☐ Jetted
☐ Dug ☐ Driven
☐ Other mud rotary

Use
☐ Domestic ☐ Public Supply
☐ Industrial ☐ Irrigation
☐ Municipal ☐ Commercial
☐ Test Well ☐ Heating or Cooling
☒ Monitoring
☐ Other

One well volume (V) = gallons
Initial Development Water
Water Level (TIC)
Well Depth
Color
Odor
Clarity
Developed By
Date
Well Development Date
Description of Development Technique

Pump
Date Installed Type
Manufacturer Model No.
H.P. Volts
Capacity
Depth of Pump Intake Setting
No. of Stages
☐ Oil ☐ Water Lubrication
Power Source
Material of drop pipe
Bowls
Shafting Impellors
Bowl Diameter
Column Pipe Diameter Length
Modification

Geophysical Logs Run Gamma, Resistivity, SP, ran 11/27/07

Water Quality
Sample taken? ☐ Yes ☐ No
Where analyzed?

Date well completed 1/27/08

******Mechanical Integrity Test******

PSI Increments		Calibration Date of Gage	
PSI Full Scale			
Test Run By	Stan Davis, Len Eakin	Date Test Run	1/25/08
Time Beginning of Test	800	Time End of Test	1000
Initial Pressure	35.0 PSIG	Initial Fluid Level	4.0 inches
Final Pressure	35.0 PSIG	Final Fluid Level	4.0inches

WELL DEVELOPMENT RECORD – PARAMETER MEASUREMENTS

Well No.	Time	Total Volume Withdrawal		pH	Conductivity (ms/cm)	Temp (°C)	Turbidity (NTU)	Comments
		Gallons	Borehole Volume					
32-3C	1400						appears cl.	1/27/08 well developed
	1425							water cleared up within 5 minutes
								approx 50 gpm while pumping

POWERTECH WELL AND PUMP DATA

Location of Well Dewey, SD	Drilling Contractor Davis Drilling	Driller Tony	Well Name DB07-32-5
County Custer	Type of Rig	Drilling Fluid mud	Well Depth 608'
LAT 4815588N	LONG 578650E	Elevation 3628'	Datum point from which all measurements are taken

Screened Monitoring Well Completion Detail

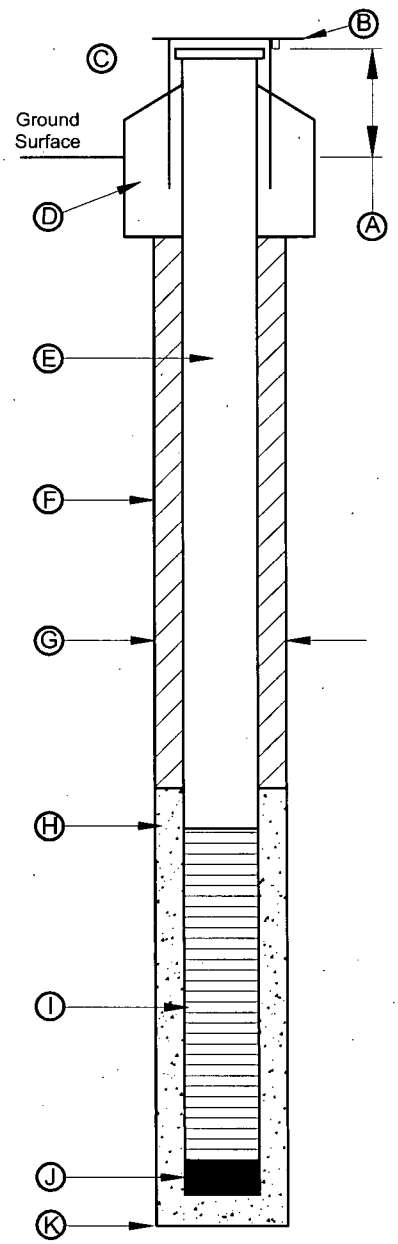

Screened Well No.

A. Stick-up Length 2.0'

B. Key No. NA

C. Protective Casing
- Diameter NA
- Material NA
- Length NA
- Depth to Bottom NA

D. Surface Completion
- Diameter NA
- Depth NA
- Material NA

E. Well Casing Data
- Diameter 4" ID
- Material PVC
- Length 595'
- Weight SCH 40
- Depth to Bottom 593'

F. Grout cement Date 11/17/07
- Depth to Top 0'
- Depth to Bottom 593'
- Material sulfate resis. cement
- Density 15.2b/gal
- Volume 13.4 bbls
- % Excess 60
- Method of Installation displacement
- Depth to Cement in Casing 520'
- Return Constant ☐ Yes ☒ No
- Volume of Grout Return 0

G. Borehole Diameter
- Drilling Dates 6.25" 11/17/07

H. Pack Type/Size NA Date NA
- Depth to Top NA
- Depth to Bottom
- Material
- Method of Installation
- Gradation

I. Screen Date 2/6/08
- Depth to Top 593-608'
- Depth to Bottom
- Manufacturer
- Material PVC
- Slot .01"

J. Bottom Cap
- Material PVC
- Length 1"
- Driller Tommy

Boring Depth 634'

Additional Information

Method of Drilling Date: 11/17/07
- ☐ Cabel Tool
- ☒ Direct Rotary
- ☐ Bucket Auger
- ☐ Flight Auger
- ☐ Dug
- ☐ Other mud rotary
- ☐ Hollow Rod
- ☐ Air Rotary
- ☐ Reverse Rotary
- ☐ Jetted
- ☐ Driven

Use
- ☐ Domestic
- ☐ Industrial
- ☐ Municipal
- ☐ Test Well
- ☒ Monitoring
- ☐ Other
- ☐ Public Supply
- ☐ Irrigation
- ☐ Commercial
- ☐ Heating or Cooling

One well volume (V) = gallons

Initial Development Water
- Water Level (TIC)
- Well Depth
- Color
- Odor
- Clarity
- Developed By
- Date
- Well Development Date
- Description of Development Technique

Pump
- Date Installed
- Type
- Manufacturer
- Model No.
- H.P.
- Volts
- Capacity
- Depth of Pump Intake Setting
- No. of Stages
- ☐ Oil ☐ Water Lubrication
- Power Source
- Material of drop pipe
- Bowls
- Shafting
- Impellors
- Bowl Diameter
- Column Pipe Diameter
- Length
- Modification

Geophysical Logs Run Gamma, Resistivity, SP, ran 11/17/07

******Mechanical Integrity Test******

PSI Increments		Calibration Date of Gage	
PSI Full Scale			
Test Run By	Stan Davis, Len Eakin	Date Test Run	2/5/08
Time Beginning of Test	0900	Time End of Test	1100
Initial Pressure	35.0 PSIG	Initial Fluid Level	5.0 inches
Final Pressure	35.0 PSIG	Final Fluid Level	5.0inches

Water Quality
- Sample taken? ☐ Yes ☐ No
- Where analyzed?

Date well completed 2/6/08

WELL DEVELOPMENT RECORD – PARAMETER MEASUREMENTS

Well No.	Time	Total Volume Withdrawal		pH	Conductivity (ms/cm)	Temp (°C)	Turbidity (NTU)	Comments
		Gallons	Borehole Volume					
32-5	1500						appears cl.	2/6/08 well developed
	1535							water cleared up within 5 minutes
								approx 20 gpm while pumping
								220psi kickoff, 130psi sustained

POWERTECH WELL AND PUMP DATA

Location of Well	Drilling Contractor	Driller	Well Name DB07-32-4C
Dewey, SD	Davis Drilling	Tony	
County	Type of Rig	Drilling Fluid	Well Depth 595'
Custer		mud	
LAT 4815507N	LONG 578846E	Elevation 3640'	Datum point from which all measurements are taken

Screened Monitoring Well Completion Detail

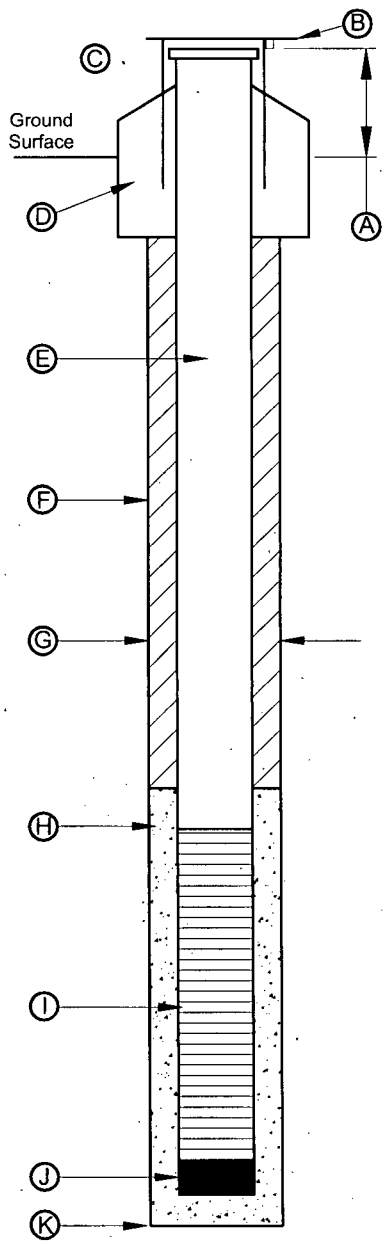

Screened Well No.

A. Stick-up Length 2.0'
B. Key No. NA
C. Protective Casing
- Diameter NA
- Material NA
- Length NA
- Depth to Bottom NA

D. Surface Completion
- Diameter NA
- Depth NA
- Material NA

E. Well Casing Data
- Diameter 4" ID
- Material PVC
- Length 582'
- Weight SCH 40
- Depth to Bottom 580'

F. Grout cement Date 12/5/07
- Depth to Top 0'
- Depth to Bottom 582'
- Material sulfate resis. cement
- Density 15.1 lb/gal
- Volume 17.4 bbls
- % Excess 70
- Method of Installation displacement
- Depth to Cement in Casing 480'
- Return Constant ☐ Yes ☒ No
- Volume of Grout Return 0

G. Borehole Diameter
- Drilling Dates 6.25" 12/4/07

H. Pack Type/Size NA Date NA
- Depth to Top NA
- Depth to Bottom
- Material
- Method of Installation
- Gradation

I. Screen Date 2/4/08
- Depth to Top 580-595'
- Depth to Bottom
- Manufacturer
- Material PVC
- Slot .01"

J. Bottom Cap
- Material PVC
- Length 1"
- Driller Tommy

Boring Depth 630'

Additional Information

Method of Drilling Date: 12/4/07
- ☐ Cabel Tool
- ☐ Hollow Rod
- ☒ Direct Rotary
- ☐ Air Rotary
- ☐ Bucket Auger
- ☐ Reverse Rotary
- ☐ Flight Auger
- ☐ Jetted
- ☐ Dug
- ☐ Driven
- ☐ Other mud rotary

Use
- ☐ Domestic
- ☐ Public Supply
- ☐ Industrial
- ☐ Irrigation
- ☐ Municipal
- ☐ Commercial
- ☐ Test Well
- ☐ Heating or Cooling
- ☒ Monitoring
- ☐ Other

One well volume (V) = gallons

Initial Development Water
- Water Level (TIC) ____
- Well Depth ____
- Color ____
- Odor
- Clarity ____
- Developed By ____
- Date ____
- Well Development Date ____
- Description of Development Technique ____

Pump
- Date Installed ____ Type ____
- Manufacturer ____ Model No. ____
- H.P. ____ Volts ____
- Capacity ____
- Depth of Pump Intake Setting ____
- No. of Stages ____
- ☐ Oil ☐ Water Lubrication
- Power Source ____
- Material of drop pipe ____
- Bowls ____
- Shafting ____ Impellors ____
- Bowl Diameter ____
- Column Pipe Diameter ____ Length ____
- Modification ____

Geophysical Logs Run Gamma, Resistivity, SP, ran 12/4/07

******Mechanical Integrity Test******

PSI Increments		Calibration Date of Gage	
PSI Full Scale			
Test Run By	Stan Davis, Len Eakin	Date Test Run	1/28/08
Time Beginning of Test	1000	Time End of Test	1200
Initial Pressure	35.0 PSIG	Initial Fluid Level	6.0 inches
Final Pressure	35.0 PSIG	Final Fluid Level	6.0inches

Water Quality
- Sample taken? ☐ Yes ☐ No
- Where analyzed? ____

Date well completed 2/4/08

WELL DEVELOPMENT RECORD – PARAMETER MEASUREMENTS

Well No.	Time	Total Volume Withdrawal		pH	Conductivity (ms/cm)	Temp (°C)	Turbidity (NTU)	Comments
		Gallons	Borehole Volume					
32-4C	1400						appears cl.	2/4/08 well developed
	1425							water cleared up within 5 minutes
								approx 30 gpm while pumping

POWERTECH WELL AND PUMP DATA

Location of Well	Drilling Contractor	Driller	Well Name DB07-29-7
Dewey, SD	Davis Drilling	Tony	
County Custer	Type of Rig	Drilling Fluid mud	Well Depth 650'
LAT 4816313N	LONG 578652E	Elevation 3703'	Datum point from which all measurements are taken

Screened Monitoring Well Completion Detail

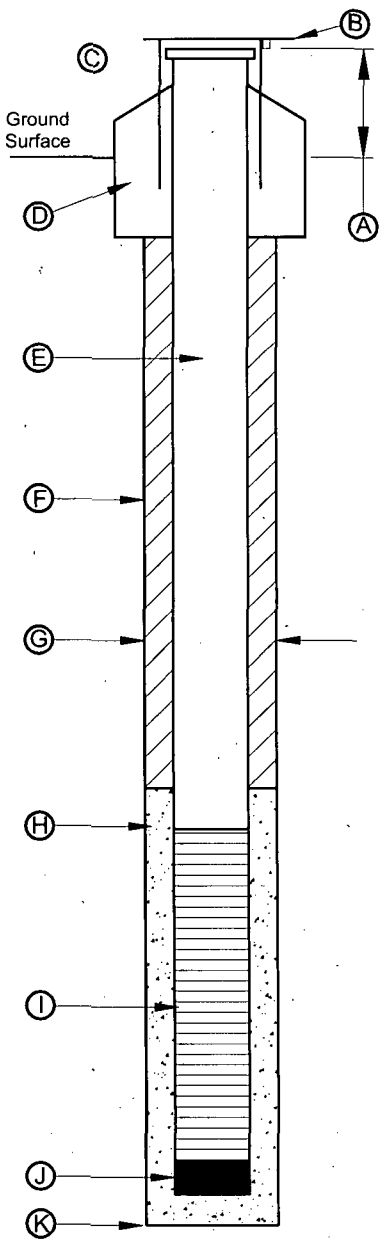

Screened Well No.

A. Stick-up Length 2.0'
B. Key No. NA
C. Protective Casing
- Diameter NA
- Material NA
- Length NA
- Depth to Bottom NA

D. Surface Completion
- Diameter NA
- Depth NA
- Material NA

E. Well Casing Data
- Diameter 4" ID
- Material PVC
- Length 637'
- Weight SCH 40
- Depth to Bottom 635'

F. Grout cement Date 11/20/07
- Depth to Top 0'
- Depth to Bottom 593'
- Material sulfate resis. cement
- Density 15.2b/gal
- Volume 17.2 bbls
- % Excess 70
- Method of Installation displacement
- Depth to Cement in Casing 550'
- Return Constant ☐ Yes ☒ No
- Volume of Grout Return 0

G. Borehole Diameter
- Drilling Dates 6.25" 11/20/07

H. Pack Type/Size NA Date NA
- Depth to Top NA
- Depth to Bottom
- Material
- Method of Installation
- Gradation

I. Screen Date 2/8/08
- Depth to Top 635-650'
- Depth to Bottom
- Manufacturer
- Material PVC
- Slot .01"

J. Bottom Cap
- Material PVC
- Length 1"
- Driller Tony

Boring Depth 660'

Additional Information

Method of Drilling Date: 11/20/07
- ☐ Cabel Tool
- ☐ Hollow Rod
- ☒ Direct Rotary
- ☐ Air Rotary
- ☐ Bucket Auger
- ☐ Reverse Rotary
- ☐ Flight Auger
- ☐ Jetted
- ☐ Dug
- ☐ Driven
- ☐ Other mud rotary

Use
- ☐ Domestic
- ☐ Public Supply
- ☐ Industrial
- ☐ Irrigation
- ☐ Municipal
- ☐ Commercial
- ☐ Test Well
- ☐ Heating or Cooling
- ☒ Monitoring
- ☐ Other

One well volume (V) = gallons

Initial Development Water
- Water Level (TIC)
- Well Depth
- Color
- Odor
- Clarity
- Developed By
- Date
- Well Development Date
- Description of Development Technique

Pump
- Date Installed
- Type
- Manufacturer
- Model No.
- H.P.
- Volts
- Capacity
- Depth of Pump Intake Setting
- No. of Stages
- ☐ Oil ☐ Water Lubrication
- Power Source
- Material of drop pipe
- Bowls
- Shafting
- Impellors
- Bowl Diameter
- Column Pipe Diameter
- Length
- Modification

Geophysical Logs Run Gamma, Resistivity, SP, ran 11/20/07

******Mechanical Integrity Test******

PSI Increments		Calibration Date of Gage	
PSI Full Scale			
Test Run By	Stan Davis, Len Eakin	Date Test Run	2/7/08
Time Beginning of Test	0930	Time End of Test	1130
Initial Pressure	35.0 PSIG	Initial Fluid Level	5.0 inches
Final Pressure	35.0 PSIG	Final Fluid Level	5.0inches

Water Quality
- Sample taken? ☐ Yes ☐ No
- Where analyzed?

Date well completed 2/8/08

WELL DEVELOPMENT RECORD – PARAMETER MEASUREMENTS

Well No.	Time	Total Volume Withdrawal		pH	Conductivity (ms/cm)	Temp (°C)	Turbidity (NTU)	Comments
		Gallons	Borehole Volume					
29-7	1500						appears cl.	2/8/08 well developed
	1530							water cleared up within 3 minutes
								less than 1 gpm while pumping
								100psi kickoff, 50psi sustained
								v. slow recharge

POWERTECH WELL AND PUMP DATA

Location of Well Dewey, SD	Drilling Contractor Davis Drilling	Driller Tony	Well Name DB07-32-9C
County Custer	Type of Rig	Drilling Fluid mud	Well Depth 505'
LAT 4815586N	LONG 578744E	Elevation 3683"	Datum point from which all measurements are taken

Screened Monitoring Well Completion Detail

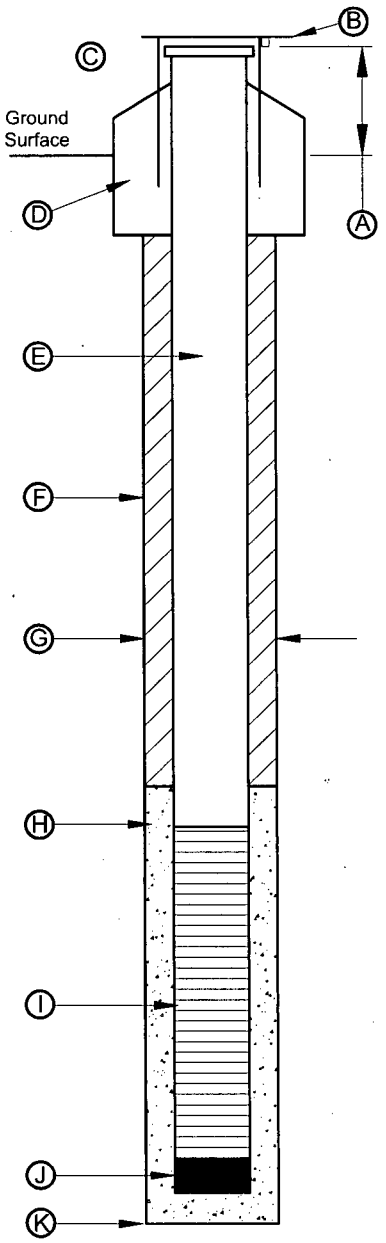

Screened Well No.

A. Stick-up Length 2.0'
B. Key No. NA
C. Protective Casing
- Diameter NA
- Material NA
- Length NA
- Depth to Bottom NA

D. Surface Completion
- Diameter NA
- Depth NA
- Material NA

E. Well Casing Data
- Diameter 6" ID
- Material PVC
- Length 492'
- Weight SCH 40
- Depth to Bottom 490'

F. Grout cement Date 2/20/08
- Depth to Top 0'
- Depth to Bottom 491'
- Material sulfate resis. cement
- Density 15.2 lb/gal
- Volume 24.8 bbls
- % Excess 50
- Method of Installation displacement
- Depth to Cement in Casing 370'
- Return Constant ☒ Yes ☐ No
- Volume of Grout Return 8 bbls

G. Borehole Diameter
- Drilling Dates 6.25" 1/15/08

H. Pack Type/Size NA Date NA
- Depth to Top NA
- Depth to Bottom
- Material
- Method of Installation
- Gradation

I. Screen Date 3/10/08
- Depth to Top 490-505"
- Depth to Bottom
- Manufacturer
- Material PVC
- Slot .01"

J. Bottom Cap
- Material PVC
- Length 1"
- Driller Tommy

Boring Depth "

Additional Information Dewey pump test site - upper Fall River sand lens (not in pumped lens)

******Mechanical Integrity Test******

PSI Increments		Calibration Date of Gage	
PSI Full Scale			
Test Run By	Stan Davis, Len Eakin	Date Test Run	3/9/08
Time Beginning of Test	0800	Time End of Test	1000
Initial Pressure	35.0 PSIG	Initial Fluid Level	4.0 inches
Final Pressure	35.0 PSIG	Final Fluid Level	4.0inches

Method of Drilling Date: 1/15/08
- ☐ Cabel Tool
- ☐ Hollow Rod
- ☒ Direct Rotary
- ☐ Air Rotary
- ☐ Bucket Auger
- ☐ Reverse Rotary
- ☐ Flight Auger
- ☐ Jetted
- ☐ Dug
- ☐ Driven
- ☐ Other mud rotary

Use
- ☐ Domestic
- ☐ Public Supply
- ☐ Industrial
- ☐ Irrigation
- ☐ Municipal
- ☐ Commercial
- ☐ Test Well
- ☐ Heating or Cooling
- ☒ Monitoring
- ☐ Other

One well volume (V) = gallons

Initial Development Water
- Water Level (TIC)
- Well Depth
- Color
- Odor
- Clarity
- Developed By
- Date
- Well Development Date
- Description of Development Technique

Pump
- Date Installed
- Type
- Manufacturer
- Model No.
- H.P.
- Volts
- Capacity
- Depth of Pump Intake Setting
- No. of Stages
- ☐ Oil ☐ Water Lubrication
- Power Source
- Material of drop pipe
- Bowls
- Shafting
- Impellors
- Bowl Diameter
- Column Pipe Diameter
- Length
- Modification

Geophysical Logs Run Gamma, Resistivity, SP, ran 1/15/08

Water Quality
- Sample taken? ☐ Yes ☐ No
- Where analyzed?

Date well completed 3/10/08

WELL DEVELOPMENT RECORD – PARAMETER MEASUREMENTS

Well No.	Time	Total Volume Withdrawal		pH	Conductivity (ms/cm)	Temp (°C)	Turbidity (NTU)	Comments
		Gallons	Borehole Volume					
32-9C	1400						dirty-clear.	3/10/08 well developed
	1430							water cleared up after 20 minutes very black water and sand coming out
								approx 40-45 gpm while pumping
								220psi kickoff 90psi sustained
								6gpm flow by itself
								screened interval in Fall River formation

POWERTECH WELL AND PUMP DATA

Location of Well Dewey, SD	Drilling Contractor Davis Drilling	Driller Tony	Well Name DB07-32-10
County Custer	Type of Rig	Drilling Fluid mud	Well Depth 730'
LAT 4815611N	LONG 578729E	Elevation 3655"	Datum point from which all measurements are taken

Screened Monitoring Well Completion Detail

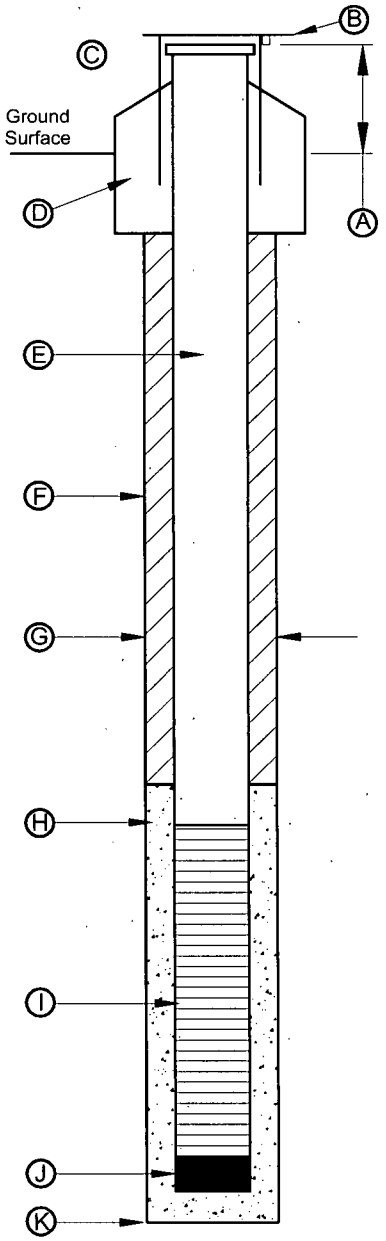

Screened Well No.

A. Stick-up Length 2.0'
B. Key No. NA
C. Protective Casing
Diameter NA
Material NA
Length NA
Depth to Bottom NA
D. Surface Completion
Diameter NA
Depth NA
Material NA
E. Well Casing Data
Diameter 6" ID
Material PVC
Length 717'
Weight SCH 40
Depth to Bottom 715'
F. Grout cement Date 1/28/08
Depth to Top 0'
Depth to Bottom 730'
Material sulfate resis. cement
Density 15.3 lb/gal
Volume 19.1 bbls
% Excess 70
Method of Installation displacement
Depth to Cement in Casing 615'
Return Constant ☒ Yes ☐ No
Volume of Grout Return 1 bbls
G. Borehole Diameter
Drilling Dates 8.75" ream 1/28/08
H. Pack Type/Size NA Date NA
Depth to Top NA
Depth to Bottom
Material
Method of Installation
Gradation
I. Screen Date 3/11/08
Depth to Top 715-730"
Depth to Bottom
Manufacturer
Material PVC
Slot .01"
J. Bottom Cap
Material PVC
Length 1"
Driller Tommy
Boring Depth "

Additional Information

Method of Drilling Date: 1/26/08
☐ Cabel Tool ☐ Hollow Rod
☒ Direct Rotary ☐ Air Rotary
☐ Bucket Auger ☐ Reverse Rotary
☐ Flight Auger ☐ Jetted
☐ Dug ☐ Driven
☐ Other mud rotary

Use
☐ Domestic ☐ Public Supply
☐ Industrial ☐ Irrigation
☐ Municipal ☐ Commercial
☐ Test Well ☐ Heating or Cooling
☒ Monitoring
☐ Other

One well volume (V) = gallons
Initial Development Water
Water Level (TIC)
Well Depth
Color
Odor
Clarity
Developed By
Date
Well Development Date
Description of Development Technique

Pump
Date Installed Type
Manufacturer Model No.
H.P. Volts
Capacity
Depth of Pump Intake Setting
No. of Stages
☐ Oil ☐ Water Lubrication
Power Source
Material of drop pipe
Bowls
Shafting Impellors
Bowl Diameter
Column Pipe Diameter Length
Modification

Geophysical Logs Run Gamma, Resistivity, SP, ran 1/26/08

Water Quality
Sample taken? ☐ Yes ☐ No
Where analyzed?

Date well completed 3/11/08

******Mechanical Integrity Test******

PSI Increments		Calibration Date of Gage	
PSI Full Scale			
Test Run By	Stan Davis, Len Eakin	Date Test Run	3/10/08
Time Beginning of Test	1200	Time End of Test	1405
Initial Pressure	35.0 PSIG	Initial Fluid Level	6.0 inches
Final Pressure	35.0 PSIG	Final Fluid Level	6.0inches

WELL DEVELOPMENT RECORD – PARAMETER MEASUREMENTS

Well No.	Time	Total Volume Withdrawal		pH	Conductivity (ms/cm)	Temp (°C)	Turbidity (NTU)	Comments
		Gallons	Borehole Volume					
32-10	1600						v. dirty	3/11/08 well developed
	1630							water v. sl. dirty at end of test
								approx 2 gpm while pumping
								110psi kickoff decreases quickly to 2gpm at 50psi
								well recharges quickly when pump shut off
								screened interval in Lakota formation

POWERTECH WELL AND PUMP DATA

Location of Well Dewey, SD	Drilling Contractor Davis Drilling	Driller Tony	Well Name DB07-32-11
County Custer	Type of Rig	Drilling Fluid mud	Well Depth 930'
LAT 4815572N	LONG 578734E	Elevation 3664"	Datum point from which all measurements are taken

Screened Monitoring Well Completion Detail

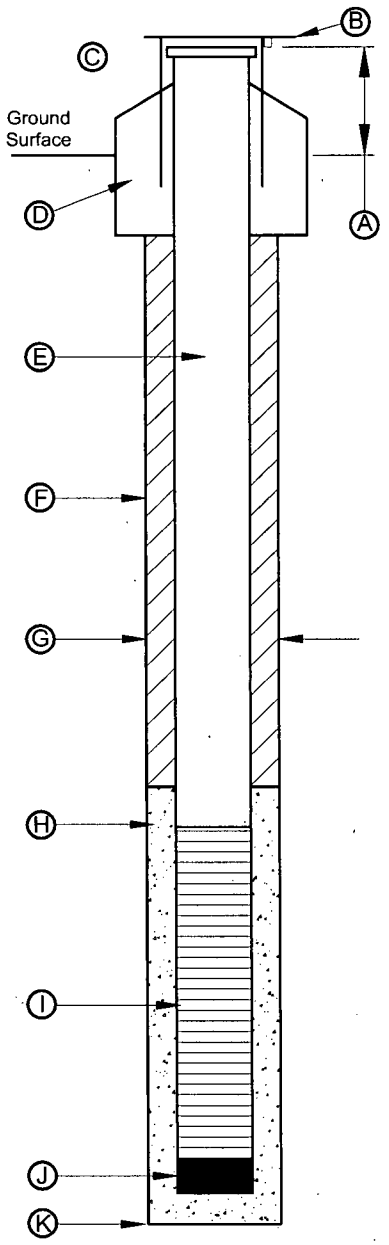

Screened Well No.

A. Stick-up Length 2.0'
B. Key No. NA
C. Protective Casing
Diameter NA
Material NA
Length NA
Depth to Bottom NA
D. Surface Completion
Diameter NA
Depth NA
Material NA
E. Well Casing Data
Diameter 6" ID
Material PVC
Length 912'
Weight SCH 40
Depth to Bottom 910'
F. Grout cement Date 2/12/08
Depth to Top 0'
Depth to Bottom 911'
Material sulfate resis. cement
Density 15.2 lb/gal
Volume 55.0 bbls
% Excess 70
Method of Installation displacement
Depth to Cement in Casing 760'
Return Constant ☒ Yes ☐ No
Volume of Grout Return 8 bbls
G. Borehole Diameter
Drilling Dates 6.25" 2/7/08
H. Pack Type/Size NA Date NA
Depth to Top NA
Depth to Bottom
Material
Method of Installation
Gradation
I. Screen Date 3/8/08
Depth to Top 910-930"
Depth to Bottom
Manufacturer
Material PVC
Slot .01"
J. Bottom Cap
Material PVC
Length 1"
Driller Tommy
Boring Depth "

Additional Information

Method of Drilling Date: 2/7/08
☐ Cabel Tool ☐ Hollow Rod
☒ Direct Rotary ☐ Air Rotary
☐ Bucket Auger ☐ Reverse Rotary
☐ Flight Auger ☐ Jetted
☐ Dug ☐ Driven
☐ Other mud rotary

Use
☐ Domestic ☐ Public Supply
☐ Industrial ☐ Irrigation
☐ Municipal ☐ Commercial
☐ Test Well ☐ Heating or Cooling
☒ Monitoring
☐ Other

One well volume (V) = gallons
Initial Development Water
Water Level (TIC)
Well Depth
Color
Odor
Clarity
Developed By
Date
Well Development Date
Description of Development Technique

Pump
Date Installed Type
Manufacturer Model No.
H.P. Volts
Capacity
Depth of Pump Intake Setting
No. of Stages
☐ Oil ☐ Water Lubrication
Power Source
Material of drop pipe
Bowls
Shafting Impellors
Bowl Diameter
Column Pipe Diameter Length
Modification

Geophysical Logs Run Gamma, Resistivity, SP, ran 2/8/08

Water Quality
Sample taken? ☐ Yes ☐ No
Where analyzed?

Date well completed 3/8/08

******Mechanical Integrity Test******

PSI Increments		Calibration Date of Gage	
PSI Full Scale			
Test Run By	Stan Davis, Len Eakin	Date Test Run	3/5/08
Time Beginning of Test	0830	Time End of Test	1000
Initial Pressure	35.0 PSIG	Initial Fluid Level	4.0 inches
Final Pressure	35.0 PSIG	Final Fluid Level	4.0inches

WELL DEVELOPMENT RECORD – PARAMETER MEASUREMENTS

Well No.	Time	Total Volume Withdrawal		pH	Conductivity (ms/cm)	Temp (°C)	Turbidity (NTU)	Comments
		Gallons	Borehole Volume					
32-11	1200						appears cl.	3/8/08 well developed
	1230							water cleared up within 5 minutes
								approx 5 gpm while pumping
								110psi kickoff slowly decreases to 2gpm at 75psi
								well recharges quickly when pump shut off
								screened interval in Unkpapa formation

Knight Piésold
CONSULTING

Appendix B-2
Time and Water Level Data Values Used in Pumping Test Analysis: Dewey Test, Drawdown Data

Table B.2-1:
Time and Water Level Data Values Used in Pumping Test Analysis: Dewey Test, Drawdown Data

32-3C		GW-49		29-7		32-4C		32-5		32-9C	
Time (days)	Drawdown (ft)	Time (days)	Drawdown (ft)	Time (days)	Drawdown (ft)	Time (days)	Drawdown (ft)	Time (days)	Drawdown (ft)	Time (days)	Drawdown (ft)
0.000012	16.362759	0.000012	-0.008329	0.000012	0.045472	0.000012	-0.002208	0.000000	-0.048216	0.000012	-0.025243
0.000023	19.161989	0.000023	-0.001406	0.000023	-0.000681	0.000023	0.004715	0.000012	-0.022831	0.000023	0.027834
0.000035	19.948912	0.000035	0.007825	0.000035	0.029319	0.000035	0.007023	0.000023	0.000246	0.000035	0.034757
0.000046	20.355066	0.000046	-0.001406	0.000046	-0.023758	0.000046	0.009331	0.000035	0.002553	0.000046	-0.009089
0.000058	21.017374	0.000058	0.035517	0.000058	0.013165	0.000058	0.007023	0.000046	0.000246	0.000058	0.011680
0.000069	21.402758	0.000069	-0.012944	0.000069	-0.012220	0.000069	0.002408	0.000058	0.004861	0.000069	0.009372
0.000081	21.651989	0.000081	-0.008329	0.000081	0.052395	0.000081	0.013946	0.000069	-0.011293	0.000081	0.023219
0.000093	22.035067	0.000093	-0.036021	0.000093	0.057011	0.000093	0.002408	0.000081	-0.020523	0.000093	0.013988
0.000104	22.071989	0.000104	0.007825	0.000104	0.001626	0.000104	0.016254	0.000093	0.004861	0.000104	-0.002166
0.000116	22.016603	0.000116	0.014748	0.000116	-0.028374	0.000116	0.000100	0.000104	-0.015908	0.000116	0.037065
0.000127	22.381220	0.000127	-0.006021	0.000127	-0.000681	0.000127	0.000100	0.000116	0.000246	0.000127	0.013988
0.000139	22.337374	0.000139	-0.001406	0.000139	-0.005297	0.000139	0.009331	0.000127	-0.002062	0.000139	-0.006781
0.000150	22.618912	0.000150	-0.008329	0.000150	0.045472	0.000150	0.009331	0.000139	0.002553	0.000150	-0.004474
0.000162	22.508142	0.000162	0.005517	0.000162	0.006242	0.000162	0.007023	0.000150	0.021015	0.000162	-0.018320
0.000174	22.847374	0.000174	-0.019867	0.000174	-0.021451	0.000174	0.011639	0.000162	-0.008985	0.000174	0.018603
0.000185	22.914297	0.000185	-0.008329	0.000185	-0.026066	0.000185	-0.004515	0.000174	0.014092	0.000185	0.000142
0.000197	22.999681	0.000197	-0.017559	0.000197	0.024703	0.000197	0.000100	0.000185	-0.018216	0.000197	0.013988
0.000208	22.893528	0.000208	-0.029098	0.000208	0.003934	0.000208	0.013946	0.000197	0.016400	0.000208	0.000142
0.000220	23.131220	0.000220	-0.003713	0.000220	0.020088	0.000220	0.013946	0.000208	-0.013600	0.000220	0.002449
0.000231	23.131220	0.000231	0.010133	0.000231	0.006242	0.000231	0.013946	0.000220	0.018707	0.000231	-0.013704
0.000243	23.271988	0.000243	-0.012944	0.000243	-0.014528	0.000243	0.011639	0.000231	0.023323	0.000243	0.011680
0.000255	23.121988	0.000255	0.017056	0.000255	0.031626	0.000255	0.004715	0.000243	-0.004370	0.000255	-0.011397
0.000266	23.101219	0.000266	0.005517	0.000266	0.038549	0.000266	0.023177	0.000255	-0.002062	0.000266	0.011680
0.000278	23.934296	0.000278	-0.022175	0.000278	0.006242	0.000278	0.009331	0.000266	-0.011293	0.000278	-0.002166
0.000289	24.737373	0.000289	-0.026790	0.000289	-0.032989	0.000289	0.007023	0.000278	0.009477	0.000289	0.009372
0.000301	25.408913	0.000301	0.007825	0.000301	-0.009912	0.000301	0.009331	0.000289	0.057938	0.000301	-0.009089
0.000312	26.036604	0.000312	-0.001406	0.000312	0.020088	0.000312	0.002408	0.000301	-0.008985	0.000312	0.002449
0.000324	27.222757	0.000324	-0.022175	0.000324	0.020088	0.000324	0.013946	0.000312	-0.018216	0.000324	-0.013704
0.000336	27.725836	0.000336	-0.008329	0.000336	-0.021451	0.000336	-0.004515	0.000324	0.009477	0.000336	-0.016012
0.000347	28.452759	0.000347	-0.029098	0.000347	0.010857	0.000347	0.007023	0.000336	-0.002062	0.000347	-0.043704
0.000359	29.391989	0.000359	0.017056	0.000359	0.006242	0.000359	0.002408	0.000347	-0.011293	0.000359	0.037065
0.000370	30.266603	0.000370	-0.017559	0.000370	-0.005297	0.000370	-0.002208	0.000359	0.000246	0.000370	-0.004474
0.000382	30.670450	0.000382	-0.012944	0.000382	0.013165	0.000382	0.013946	0.000370	0.000246	0.000382	0.018603
0.000394	30.815834	0.000394	-0.038329	0.000394	-0.000681	0.000394	0.004715	0.000382	0.025630	0.000394	0.002449
0.000417	30.891989	0.000405	-0.010636	0.000417	0.015472	0.000417	0.009331	0.000394	0.000246	0.000417	-0.004474
0.000451	29.811989	0.000417	-0.006021	0.000451	-0.035297	0.000451	0.013946	0.000417	-0.006677	0.000451	0.030142
0.000463	28.955835	0.000451	0.000902	0.000463	0.057011	0.000463	0.000100	0.000451	0.048707	0.000463	-0.022935
0.000486	27.504297	0.000463	-0.017559	0.000486	-0.014528	0.000486	0.002408	0.000463	0.016400	0.000486	-0.013704
0.000498	26.318142	0.000486	0.000902	0.000498	-0.000681	0.000498	-0.002208	0.000486	0.000246	0.000498	-0.011397
0.000521	25.127373	0.000498	0.014748	0.000521	0.017780	0.000521	0.007023	0.000498	-0.027447	0.000521	-0.025243
0.000532	24.181219	0.000521	0.012441	0.000532	-0.007605	0.000532	0.011639	0.000521	0.016400	0.000532	-0.004474
0.000556	23.816605	0.000532	-0.019867	0.000556	0.033934	0.000556	0.013946	0.000532	-0.004370	0.000556	-0.029858
0.000590	24.716604	0.000556	0.010133	0.000590	-0.014528	0.000590	-0.002208	0.000556	0.002553	0.000590	-0.048320
0.000625	26.325066	0.000590	0.042441	0.000625	0.003934	0.000625	0.011639	0.000590	0.016400	0.000625	-0.020628
0.000660	28.007374	0.000625	0.007825	0.000660	0.010857	0.000660	0.007023	0.000625	0.000246	0.000660	0.013988
0.000694	29.479681	0.000660	-0.022175	0.000694	-0.019143	0.000694	0.011639	0.000660	-0.002062	0.000694	0.011680
0.000729	29.885836	0.000694	-0.017559	0.000729	0.010857	0.000729	0.016254	0.000694	-0.029754	0.000729	0.023219
0.000764	30.118912	0.000729	0.005517	0.000764	0.045472	0.000764	0.000100	0.000729	-0.018216	0.000764	0.000142
0.000799	29.791220	0.000764	-0.012944	0.000799	0.020088	0.000799	-0.004515	0.000764	0.034861	0.000799	0.020911
0.000833	29.622759	0.000799	0.010133	0.000833	-0.012220	0.000833	0.000100	0.000799	0.039477	0.000833	0.025526

Table B.2-1:
Time and Water Level Data Values Used in Pumping Test Analysis: Dewey Test, Drawdown Data

32-3C		GW-49		29-7		32-4C		32-5		32-9C	
Time (days)	Drawdown (ft)	Time (days)	Drawdown (ft)	Time (days)	Drawdown (ft)	Time (days)	Drawdown (ft)	Time (days)	Drawdown (ft)	Time (days)	Drawdown (ft)
0.000903	29.613527	0.000833	-0.008329	0.000903	-0.026066	0.000903	0.007023	0.000833	0.021015	0.000903	-0.018320
0.000972	29.675835	0.000903	-0.022175	0.000972	-0.005297	0.000972	0.030100	0.000903	-0.008985	0.000972	0.020911
0.001042	29.874296	0.000972	0.021671	0.001042	-0.028374	0.001042	0.004715	0.000972	0.025630	0.001042	-0.016012
0.001111	29.814297	0.001042	0.023979	0.001111	-0.014528	0.001111	0.011639	0.001042	0.067169	0.001111	0.018603
0.001181	29.823526	0.001111	0.012441	0.001181	-0.005297	0.001181	0.013946	0.001111	0.069477	0.001181	0.018603
0.001250	29.851219	0.001181	0.010133	0.001250	-0.030681	0.001250	0.011639	0.001181	0.090246	0.001250	-0.013704
0.001319	29.989681	0.001250	-0.015252	0.001319	0.027011	0.001319	0.016254	0.001250	0.076400	0.001319	0.064757
0.001389	30.010450	0.001319	-0.040636	0.001389	-0.056066	0.001389	0.002408	0.001319	0.131784	0.001389	-0.041397
0.001493	30.190451	0.001389	0.007825	0.001493	0.001626	0.001493	0.016254	0.001389	0.152553	0.001493	-0.025243
0.001597	30.144297	0.001493	0.014748	0.001597	-0.032989	0.001597	0.023177	0.001493	0.180246	0.001597	-0.025243
0.001701	30.280451	0.001597	-0.019867	0.001701	-0.012220	0.001701	0.016254	0.001597	0.203323	0.001701	-0.032166
0.001806	30.506603	0.001701	-0.022175	0.001806	-0.000681	0.001806	0.030100	0.001701	0.274861	0.001806	0.013988
0.001944	30.497374	0.001806	-0.026790	0.001944	-0.035297	0.001944	0.041639	0.001806	0.291015	0.001944	-0.004474
0.002083	30.527374	0.001944	0.060902	0.002083	-0.014528	0.002083	0.030100	0.001944	0.330246	0.002083	-0.041397
0.002222	30.758142	0.002083	0.007825	0.002222	0.031626	0.002222	0.037023	0.002083	0.411015	0.002222	-0.029858
0.002361	30.873528	0.002222	-0.029098	0.002361	-0.009912	0.002361	0.039331	0.002222	0.452553	0.002361	-0.016012
0.002500	31.071989	0.002361	0.007825	0.002500	0.015472	0.002500	0.055485	0.002361	0.494092	0.002500	-0.009089
0.002639	30.954296	0.002500	-0.008329	0.002639	-0.012220	0.002639	0.050869	0.002500	0.512553	0.002639	-0.022935
0.002778	31.159681	0.002639	0.014748	0.002778	-0.012220	0.002778	0.048562	0.002639	0.581784	0.002778	-0.009089
0.002951	31.143528	0.002778	0.000902	0.002951	0.024703	0.002951	0.067023	0.002778	0.595630	0.002951	-0.013704
0.003125	31.323526	0.002951	-0.022175	0.003125	-0.026066	0.003125	0.071639	0.002951	0.713323	0.003125	-0.025243
0.003299	31.420450	0.003125	-0.006021	0.003299	0.006242	0.003299	0.080869	0.003125	0.701784	0.003299	-0.052935
0.003472	31.475836	0.003299	0.003210	0.003472	-0.005297	0.003472	0.080869	0.003299	0.761784	0.003472	-0.004474
0.003704	31.637373	0.003472	-0.006021	0.003704	0.015472	0.003704	0.099331	0.003472	0.791784	0.003704	0.009372
0.003935	31.695066	0.003704	0.010133	0.003935	-0.005297	0.003935	0.103946	0.003704	0.872553	0.003935	-0.046012
0.004167	31.757374	0.003935	0.007825	0.004167	0.050088	0.004167	0.143177	0.003935	0.916400	0.004167	-0.013704
0.004398	31.796604	0.004167	-0.019867	0.004398	-0.000681	0.004398	0.133946	0.004167	0.983323	0.004398	-0.004474
0.004630	32.068913	0.004398	0.005517	0.004630	0.010857	0.004630	0.143177	0.004398	1.011015	0.004630	-0.092166
0.004861	32.036606	0.004630	0.000902	0.004861	0.010857	0.004861	0.166254	0.004630	1.119477	0.004861	-0.006781
0.005208	32.232758	0.004861	0.000902	0.005208	0.017780	0.005208	0.187023	0.004861	1.158707	0.005208	-0.032166
0.005556	32.179680	0.005208	-0.008329	0.005556	0.043165	0.005556	0.196254	0.005208	1.204861	0.005556	0.030142
0.005903	32.373528	0.005556	-0.006021	0.005903	-0.012220	0.005903	0.221639	0.005556	1.304092	0.005903	0.041680
0.006250	32.382759	0.005903	-0.015252	0.006250	-0.014528	0.006250	0.244715	0.005903	1.357169	0.006250	0.000142
0.006597	32.398911	0.006250	-0.015252	0.006597	-0.021451	0.006597	0.260869	0.006250	1.421784	0.006597	0.023219
0.006944	32.641220	0.006597	0.007825	0.006944	0.008549	0.006944	0.283946	0.006597	1.530246	0.006944	0.048603
0.007292	32.781990	0.006944	-0.029098	0.007292	-0.009912	0.007292	0.309331	0.006944	1.534861	0.007292	0.041680
0.007639	32.922756	0.007292	-0.033713	0.007639	-0.002989	0.007639	0.309331	0.007292	1.567169	0.007639	0.080911
0.007986	32.874298	0.007639	-0.015252	0.007986	-0.000681	0.007986	0.339331	0.007639	1.645630	0.007986	0.083219
0.008333	32.980450	0.007986	0.019364	0.008333	-0.026066	0.008333	0.371639	0.007986	1.714861	0.008333	0.055526
0.009028	33.077374	0.008333	0.019364	0.009028	0.022395	0.009028	0.401639	0.008333	1.728707	0.009028	0.090142
0.009722	33.061218	0.009028	0.030902	0.009722	0.010857	0.009722	0.436254	0.009028	1.876400	0.009722	0.073988
0.010417	33.261990	0.009722	-0.006021	0.010417	0.010857	0.010417	0.480100	0.009722	1.954861	0.010417	0.099372
0.011111	33.460449	0.010417	-0.012944	0.011111	-0.007605	0.011111	0.521639	0.010417	2.024092	0.011111	0.133988
0.011806	33.536606	0.011111	-0.022175	0.011806	0.047780	0.011806	0.558562	0.011111	2.079477	0.011806	0.145526
0.012500	33.552757	0.011806	-0.036021	0.012500	0.010857	0.012500	0.581639	0.011806	2.178707	0.012500	0.131680
0.013194	33.728142	0.012500	-0.017559	0.013194	0.006242	0.013194	0.611639	0.012500	2.277938	0.013194	0.166296
0.013889	33.753529	0.013194	0.000902	0.013889	0.045472	0.013889	0.657792	0.013194	2.317169	0.013889	0.187065
0.014931	34.346603	0.013889	-0.015252	0.014931	-0.000681	0.014931	0.699331	0.013889	2.361015	0.014931	0.196296
0.015972	34.362759	0.014931	0.007825	0.015972	0.015472	0.015972	0.747792	0.014931	2.499476	0.015972	0.267834
0.017014	34.570450	0.015972	-0.012944	0.017014	0.001626	0.017014	0.796254	0.015972	2.568707	0.017014	0.288603

Table B.2-1:
Time and Water Level Data Values Used in Pumping Test Analysis: Dewey Test, Drawdown Data

32-3C		GW-49		29-7		32-4C		32-5		32-9C	
Time (days)	Drawdown (ft)	Time (days)	Drawdown (ft)	Time (days)	Drawdown (ft)	Time (days)	Drawdown (ft)	Time (days)	Drawdown (ft)	Time (days)	Drawdown (ft)
0.018056	34.745834	0.017014	-0.008329	0.018056	0.024703	0.018056	0.844715	0.017014	2.637938	0.018056	0.353219
0.019444	34.872757	0.018056	0.040133	0.019444	0.013165	0.019444	0.911639	0.018056	2.734861	0.019444	0.392449
0.020833	34.872757	0.019444	0.051671	0.020833	0.008549	0.020833	0.967023	0.019444	2.868707	0.020833	0.417834
0.022222	35.149681	0.020833	0.026287	0.022222	-0.012220	0.022222	1.022408	0.020833	2.961015	0.022222	0.487065
0.023611	35.149681	0.022222	0.030902	0.023611	-0.012220	0.023611	1.066254	0.022222	3.037169	0.023611	0.549372
0.025000	35.355064	0.023611	0.049364	0.025000	0.020088	0.025000	1.123946	0.023611	3.113323	0.025000	0.600142
0.026389	35.320450	0.025000	0.053979	0.026389	0.010857	0.026389	1.156254	0.025000	3.194092	0.026389	0.553988
0.027778	35.645836	0.026389	0.053979	0.027778	0.027011	0.027778	1.204715	0.026389	3.256400	0.027778	0.556296
0.029514	35.567375	0.027778	0.077056	0.029514	-0.026066	0.029514	1.285485	0.027778	3.300246	0.029514	0.616296
0.031250	35.588142	0.029514	0.083979	0.031250	0.036242	0.031250	1.315485	0.029514	3.408707	0.031250	0.623219
0.032986	35.680450	0.031250	0.134748	0.032986	0.036242	0.032986	1.363946	0.031250	3.482553	0.032986	0.690142
0.034722	35.735836	0.032986	0.100133	0.034722	-0.014528	0.034722	1.423946	0.032986	3.544861	0.034722	0.745526
0.037037	35.950451	0.034722	0.141671	0.037037	-0.016835	0.037037	1.481639	0.034722	3.607169	0.037037	0.784757
0.039352	35.978142	0.037037	0.125517	0.039352	0.024703	0.039352	1.532408	0.037037	3.713323	0.039352	0.863219
0.041667	35.952759	0.039352	0.164748	0.041667	0.001626	0.041667	1.587792	0.039352	3.807938	0.041667	0.865526
0.043981	36.153526	0.041667	0.201671	0.043981	0.006242	0.043981	1.645485	0.041667	3.863323	0.043981	0.890911
0.046296	36.012756	0.043981	0.208594	0.046296	0.001626	0.046296	1.696254	0.043981	3.953323	0.046296	0.960142
0.048611	36.144295	0.046296	0.247825	0.048611	0.010857	0.048611	1.735485	0.046296	4.015630	0.048611	0.999372
0.052083	36.488144	0.048611	0.289364	0.052083	-0.021451	0.052083	1.827792	0.048611	4.061784	0.052083	1.091680
0.055556	36.432758	0.052083	0.303210	0.055556	-0.016835	0.055556	1.887792	0.052083	4.200246	0.055556	1.147065
0.059028	36.527374	0.055556	0.402441	0.059028	0.033934	0.059028	1.940869	0.055556	4.253323	0.059028	1.243988
0.062500	36.478912	0.059028	0.471671	0.062500	-0.000681	0.062500	2.003177	0.059028	4.368707	0.062500	1.315526
0.065972	36.508911	0.062500	0.476287	0.065972	-0.000681	0.065972	2.056254	0.062500	4.426400	0.065972	1.313219
0.069444	36.580452	0.065972	0.584748	0.069444	0.015472	0.069444	2.107023	0.065972	4.481784	0.069444	1.324757
0.072917	36.688911	0.069444	0.573210	0.073021	0.059319	0.072917	2.157792	0.069444	4.548707	0.072917	1.382449
0.076389	36.806602	0.072917	0.653979	0.076493	0.057011	0.076389	2.231638	0.072917	4.647938	0.076389	1.474757
0.079861	36.647373	0.076389	0.716287	0.079965	0.033934	0.079861	2.273177	0.076389	4.650246	0.079965	1.564757
0.083368	36.778912	0.079861	0.711671	0.083438	0.070857	0.083449	2.317023	0.079931	4.777169	0.083438	1.513988
0.090312	37.895836	0.083449	0.771671	0.090382	0.084703	0.090394	2.409331	0.083403	4.807169	0.090382	1.668603
0.097257	37.900452	0.090394	0.799364	0.097326	0.084703	0.097338	2.510869	0.090347	4.936399	0.097326	1.693988
0.104201	38.121990	0.097338	0.972441	0.104271	-0.060681	0.104282	2.598562	0.097292	5.116400	0.104271	1.843988
0.111147	38.013527	0.104282	1.080902	0.111215	0.050088	0.111227	2.667792	0.104236	5.215631	0.111215	1.998603
0.118091	38.108143	0.111227	1.159364	0.118160	0.057011	0.118171	2.743946	0.111181	5.340246	0.118160	1.931680
0.125035	38.172756	0.118171	1.307056	0.125104	0.047780	0.125116	2.815485	0.118125	5.411784	0.125104	2.077065
0.131979	38.331989	0.125116	1.327825	0.132049	0.068549	0.132060	2.880100	0.125069	5.524861	0.132049	2.139373
0.138924	38.493526	0.132060	1.413210	0.138993	0.077780	0.139005	2.949331	0.132014	5.566400	0.138993	2.210911
0.149340	38.484295	0.139005	1.533210	0.149410	0.075472	0.149421	3.032408	0.138958	5.633323	0.149410	2.416296
0.159757	38.350449	0.149421	1.637056	0.159826	0.022395	0.159838	3.110869	0.149375	5.794861	0.159826	2.510911
0.170174	38.484295	0.159838	1.747825	0.170243	0.082395	0.170255	3.198562	0.159792	5.875630	0.170243	2.476295
0.180590	38.627373	0.170255	1.881671	0.180660	0.031626	0.180671	3.265485	0.170208	5.907938	0.180660	2.713988
0.194479	38.631989	0.180671	1.976287	0.194549	0.061626	0.194560	3.364715	0.180625	6.007169	0.194549	2.843219
0.208368	38.811989	0.194560	2.096287	0.208437	0.070857	0.208449	3.452408	0.194514	6.221784	0.208437	2.877834
0.222257	38.763527	0.208449	2.267056	0.222326	0.103165	0.222338	3.540100	0.208403	6.184861	0.222326	2.986295
0.236146	38.920452	0.222338	2.336287	0.236215	0.054703	0.236227	3.572408	0.222292	6.406400	0.236215	3.247065
0.250035	38.839680	0.236227	2.465518	0.250104	0.057011	0.250116	3.697023	0.236181	6.473323	0.250104	3.251680
0.263924	38.908913	0.250116	2.583210	0.263993	0.027011	0.264005	3.784715	0.250069	6.581784	0.263993	3.427065
0.277812	39.130451	0.264005	2.652441	0.277882	0.066242	0.277894	3.853946	0.263958	6.655631	0.277882	3.463988
0.295174	39.375065	0.277894	2.781671	0.295243	0.073165	0.295255	3.950869	0.277847	6.711015	0.295243	3.683219
0.312535	39.285065	0.295255	2.931671	0.312604	0.036242	0.312616	4.045485	0.295208	6.893322	0.312604	3.747834
0.329896	39.349682	0.312616	3.000902	0.329965	0.073165	0.329977	4.133177	0.312569	6.967169	0.329965	3.883988

Table B.2-1:
Time and Water Level Data Values Used in Pumping Test Analysis: Dewey Test, Drawdown Data

32-3C		GW-49		29-7		32-4C		32-5		32-9C	
Time (days)	Drawdown (ft)	Time (days)	Drawdown (ft)	Time (days)	Drawdown (ft)	Time (days)	Drawdown (ft)	Time (days)	Drawdown (ft)	Time (days)	Drawdown (ft)
0.347257	39.538914	0.329977	3.118594	0.347326	0.093934	0.347338	4.211638	0.329931	7.096400	0.347326	4.006296
0.370405	39.342758	0.347338	3.263979	0.370475	0.063934	0.370486	4.331638	0.347292	7.179477	0.370475	4.140141
0.393553	39.598911	0.370486	3.407056	0.393623	0.084703	0.393634	4.442408	0.370440	7.308707	0.393623	4.333988
0.416701	39.898911	0.393634	3.510902	0.416771	0.077780	0.416782	4.548562	0.393588	7.401015	0.416771	4.453988
0.439965	39.430450	0.416782	3.647056	0.440035	0.066242	0.440046	4.650100	0.416736	7.537169	0.440035	4.562449
0.462998	39.878143	0.440046	3.753210	0.463067	0.061626	0.463079	4.765485	0.440000	7.645630	0.463067	4.772449
0.486146	39.965836	0.463079	3.912441	0.486215	0.080088	0.486227	4.857792	0.463032	7.784092	0.486215	4.832449
0.520868	40.173527	0.486227	4.004748	0.520938	0.084703	0.520949	4.970869	0.486181	7.864861	0.520938	5.026296
0.555590	40.101990	0.520949	4.136287	0.555660	0.082395	0.555671	5.095485	0.520903	8.028708	0.555660	5.208603
0.590312	40.249680	0.555671	4.283979	0.590382	0.114703	0.590394	5.213177	0.555625	8.107169	0.590382	5.317065
0.625035	40.685837	0.590394	4.424748	0.625104	0.114703	0.625116	5.337792	0.590347	8.259477	0.625104	5.483219
0.659757	40.494297	0.625116	4.523979	0.659826	0.114703	0.659838	5.420869	0.625069	8.423323	0.659826	5.653988
0.694479	40.639683	0.659838	4.678595	0.694549	0.135472	0.694560	5.522408	0.659792	8.527169	0.694549	5.836296
0.729549	40.833527	0.694560	4.768594	0.729618	0.123934	0.729630	5.635485	0.694514	8.571015	0.729618	5.974757
0.763924	40.755066	0.729630	4.826287	0.763993	0.147011	0.764005	5.700100	0.729583	8.702554	0.763993	6.064757
0.798646	41.034298	0.764005	4.937056	0.798715	0.181626	0.798727	5.808562	0.763958	8.827168	0.798715	6.212450
0.833368	41.082760	0.798727	5.098594	0.833438	0.200088	0.833449	5.947023	0.798681	8.944861	0.833438	6.332449
0.902814	41.218910	0.833449	5.190902	0.902882	0.234703	0.902893	6.161639	0.833403	9.046400	0.902882	6.581680
0.972951	41.555836	0.902893	5.433210	0.973021	0.204703	0.973032	6.307023	0.902847	9.254092	0.973021	6.800911
1.041701	41.576603	0.973032	5.627056	1.041771	0.276242	1.041782	6.487023	0.972986	9.424861	1.041771	6.907065
1.111146	41.629681	1.041782	5.779364	1.111215	0.310857	1.111227	6.620869	1.041736	9.572554	1.111215	7.170142
1.180590	41.911221	1.111227	5.890133	1.180660	0.340857	1.180671	6.722408	1.111181	9.699476	1.180660	7.343219
1.250035	41.809681	1.180671	6.007825	1.250104	0.391626	1.250116	6.844716	1.180625	9.821784	1.250104	7.516295
1.319479	41.920452	1.250116	6.148594	1.319549	0.417011	1.319560	7.010870	1.250069	10.041015	1.319549	7.650142
1.388924	42.229683	1.319560	6.298594	1.388993	0.430857	1.389005	7.167792	1.319514	10.024861	1.388993	7.786295
1.493090	42.545834	1.389005	6.467056	1.493160	0.463165	1.493171	7.389331	1.388958	10.255630	1.493160	8.090911
1.597257	42.432758	1.493171	6.704748	1.597326	0.557780	1.597338	7.603946	1.493125	10.532554	1.597326	8.335526
1.701424	42.813526	1.597338	6.898594	1.701493	0.580857	1.701505	7.770100	1.597292	10.733323	1.701493	8.522449
1.805590	42.917374	1.701505	7.087825	1.805660	0.627011	1.805671	7.989331	1.701458	10.841784	1.805660	8.739372
1.944479	44.018143	1.805671	7.272440	1.944549	0.735472	1.944560	8.307793	1.805625	11.028708	1.944549	9.013988
2.083368	44.029682	1.944560	7.604748	2.083437	0.830088	2.083449	8.510869	1.944514	11.467169	2.083437	9.277064
2.222257	44.138142	2.083449	7.805518	2.222326	0.807011	2.222338	8.670100	2.083403	11.667938	2.222326	9.452450
2.361146	44.244297	2.222338	7.997056	2.361215	0.996242	2.361227	8.845485	2.222292	11.787938	2.361215	9.558603
2.500035	44.426605	2.361227	8.121672	2.500104	1.086242	2.500116	9.090100	2.361181	11.997938	2.500104	9.870142
2.638924	44.592758	2.500116	8.357056	2.638993	1.217780	2.639005	9.244716	2.500070	12.251784	2.638993	10.087065
2.777813	44.657372	2.639005	8.516287	2.777882	1.210857	2.777894	9.413177	2.638958	12.422553	2.777882	10.220911
2.951423	44.666603	2.777894	8.696287	2.951493	1.381626	2.951505	9.646254	2.777847	12.574862	2.951493	10.474757
3.083843	44.781990	2.951505	8.933979	3.083843	1.480857	3.083843	9.766253	2.951458	12.708707	3.083843	10.599373
		3.083843	9.033210					3.083843	12.953322		

General Methodology: PSI, temperature, and time readings from Win-Situ™ digital data log were exported to Excel ".csv" file.
Drawdown was calculated as PSI at time after pumping minus average PSI before pumping; therefore, at small or zero changes in PSI negative drawdowns may be calculated.
A FORTRAN program was written to read the ".csv" file and produce a second file by extracting the records at a frequency of 40 per log-time cycle (in minutes) in order achieve equal representation of data throughout the pumping and drawdown phases of the test.

Knight Piésold
CONSULTING

Appendix B-3
Time and Water Level Data Values Used in Pumping Test Analysis: Dewey Test, Recovery Data

Table B.3-1:
Time and Water Level Data Values Used in Pumping Test Analysis: Dewey Test, Recovery Data

32-3C		49		324C		32-5		32-9C	
Time (days)	Drawdown (ft)	Time (days)	Drawdown (ft)	Time (days)	Drawdown (ft)	Time (days)	Drawdown (ft)	Time (days)	Drawdown (ft)
3.083866	42.133311	3.083866	9.035518	3.083889	9.763947	3.083866	12.934861	3.083889	10.606296
3.083877	41.493441	3.083877	9.053979	3.083901	9.766253	3.083877	12.930245	3.083901	10.603988
3.083889	40.624881	3.083889	9.042440	3.083912	9.775485	3.083889	12.925631	3.083912	10.557834
3.083901	39.645441	3.083901	9.063210	3.083924	9.770869	3.083901	12.904861	3.083924	10.585526
3.083912	38.712201	3.083912	9.148595	3.083935	9.768561	3.083912	12.907168	3.083935	10.594757
3.083924	37.792821	3.083924	9.053979	3.083947	9.759331	3.083924	12.914092	3.083947	10.615526
3.083935	36.931191	3.083935	9.058595	3.083958	9.768561	3.083935	12.909476	3.083958	10.564757
3.083947	36.228951	3.083947	9.060902	3.083970	9.768561	3.083947	12.946400	3.083970	10.567065
3.083958	35.328051	3.083958	9.060902	3.083981	9.773177	3.083958	12.918707	3.083981	10.562449
3.083970	34.549581	3.083970	9.028594	3.083993	9.770869	3.083970	12.897938	3.083993	10.638603
3.083982	33.812691	3.083981	9.056287	3.084005	9.775485	3.083981	12.895631	3.084005	10.583219
3.083993	33.055011	3.083993	9.157825	3.084016	9.766253	3.083993	12.944092	3.084016	10.640911
3.084005	32.371251	3.084005	9.042440	3.084028	9.775485	3.084005	12.946400	3.084028	10.525526
3.084016	31.673631	3.084016	9.033210	3.084039	9.768561	3.084016	12.914092	3.084039	10.594757
3.084028	30.980631	3.084028	9.049364	3.084051	9.759331	3.084028	12.955630	3.084051	10.617834
3.084039	30.350001	3.084039	9.051671	3.084062	9.770869	3.084039	12.897938	3.084062	10.666296
3.084051	29.723991	3.084051	9.063210	3.084074	9.770869	3.084051	12.914092	3.084074	10.580911
3.084063	29.162661	3.084062	9.063210	3.084086	9.766253	3.084062	12.909476	3.084086	10.601680
3.084074	28.545891	3.084074	9.051671	3.084097	9.763947	3.084074	12.921015	3.084097	10.599373
3.084086	27.984561	3.084086	9.012441	3.084109	9.770869	3.084086	12.964861	3.084109	10.555527
3.084097	27.448641	3.084097	9.047056	3.084120	9.770869	3.084097	12.939477	3.084120	10.583219
3.084109	26.901171	3.084109	9.028594	3.084132	9.775485	3.084109	12.909476	3.084132	10.562449
3.084120	26.367561	3.084120	9.056287	3.084143	9.761639	3.084120	12.930245	3.084143	10.606296
3.084132	25.877841	3.084132	9.065517	3.084155	9.773177	3.084132	12.891015	3.084155	10.599373
3.084143	25.432011	3.084143	9.051671	3.084167	9.773177	3.084143	12.897938	3.084167	10.599373
3.084155	25.004661	3.084155	9.040133	3.084178	9.773177	3.084155	12.934861	3.084178	10.590141
3.084167	24.496461	3.084167	9.132441	3.084190	9.761639	3.084167	12.897938	3.084190	10.583219
3.084178	24.161511	3.084178	9.012441	3.084201	9.775485	3.084178	12.897938	3.084201	10.578603
3.084190	23.711061	3.084190	9.051671	3.084213	9.768561	3.084190	12.951015	3.084213	10.585526
3.084201	23.359941	3.084201	9.035518	3.084224	9.757023	3.084201	12.916400	3.084224	10.585526
3.084213	22.955691	3.084213	9.063210	3.084236	9.761639	3.084213	12.925631	3.084236	10.606296
3.084224	22.567611	3.084224	9.077056	3.084248	9.768561	3.084224	12.930245	3.084248	10.583219
3.084236	22.262691	3.084236	9.042440	3.084259	9.754716	3.084236	12.918707	3.084259	10.583219
3.084248	21.946221	3.084248	9.047056	3.084282	9.766253	3.084248	12.893323	3.084282	10.597065
3.084271	21.320211	3.084259	9.047056	3.084317	9.773177	3.084259	12.893323	3.084317	10.592449
3.084305	20.518641	3.084282	9.049364	3.084329	9.766253	3.084282	12.937169	3.084329	10.601680
3.084317	20.299191	3.084317	9.067825	3.084352	9.763947	3.084317	12.900246	3.084352	10.603988
3.084340	19.844121	3.084329	9.065517	3.084363	9.759331	3.084329	12.886399	3.084363	10.622449
3.084352	19.626981	3.084352	9.044748	3.084387	9.766253	3.084352	12.895631	3.084387	10.594757
3.084375	19.225041	3.084363	9.035518	3.084398	9.775485	3.084363	12.909476	3.084398	10.564757

Table B.3-1:
Time and Water Level Data Values Used in Pumping Test Analysis: Dewey Test, Recovery Data

32-3C		49		324C		32-5		32-9C	
Time (days)	Drawdown (ft)	Time (days)	Drawdown (ft)	Time (days)	Drawdown (ft)	Time (days)	Drawdown (ft)	Time (days)	Drawdown (ft)
3.084386	19.079511	3.084387	9.023979	3.084421	9.770869	3.084387	12.930245	3.084421	10.578603
3.084410	18.739941	3.084398	9.047056	3.084456	9.766253	3.084398	12.918707	3.084456	10.606296
3.084444	18.402681	3.084421	9.141671	3.084491	9.770869	3.084421	12.925631	3.084491	10.583219
3.084479	18.125481	3.084456	9.040133	3.084526	9.766253	3.084456	12.930245	3.084526	10.578603
3.084514	17.938371	3.084491	9.063210	3.084560	9.780100	3.084491	12.914092	3.084560	10.599373
3.084549	17.758191	3.084526	9.063210	3.084595	9.757023	3.084526	12.879477	3.084595	10.585526
3.084583	17.649621	3.084560	9.125518	3.084630	9.763947	3.084560	12.932553	3.084630	10.567065
3.084618	17.520261	3.084595	9.058595	3.084664	9.761639	3.084595	12.932553	3.084664	10.597065
3.084653	17.388591	3.084630	9.033210	3.084699	9.766253	3.084630	12.925631	3.084699	10.601680
3.084688	17.256921	3.084664	9.056287	3.084769	9.766253	3.084664	12.867938	3.084769	10.587834
3.084757	17.035161	3.084699	9.153210	3.084838	9.770869	3.084699	12.909476	3.084838	10.592449
3.084826	16.811091	3.084769	9.077056	3.084907	9.750100	3.084769	12.934861	3.084907	10.599373
3.084896	16.531581	3.084838	9.033210	3.084977	9.754716	3.084838	12.902554	3.084977	10.624757
3.084965	16.325991	3.084907	9.021671	3.085046	9.768561	3.084907	12.851785	3.085046	10.590141
3.085035	16.078821	3.084977	9.042440	3.085116	9.770869	3.084977	12.851785	3.085116	10.583219
3.085104	15.880161	3.085046	9.077056	3.085185	9.768561	3.085046	12.886399	3.085185	10.594757
3.085173	15.803931	3.085116	9.053979	3.085255	9.770869	3.085116	12.844861	3.085255	10.594757
3.085243	15.519801	3.085185	9.074748	3.085359	9.757023	3.085185	12.835630	3.085359	10.610911
3.085347	15.348861	3.085255	9.056287	3.085463	9.752408	3.085255	12.807938	3.085463	10.578603
3.085452	15.247221	3.085359	9.023979	3.085567	9.770869	3.085359	12.796400	3.085567	10.606296
3.085556	15.161751	3.085463	9.033210	3.085671	9.752408	3.085463	12.773323	3.085671	10.617834
3.085660	15.032391	3.085567	9.053979	3.085810	9.752408	3.085567	12.731784	3.085810	10.583219
3.085798	14.916891	3.085671	9.056287	3.085961	9.747792	3.085671	12.674092	3.085961	10.608603
3.085939	14.775981	3.085810	9.040133	3.086088	9.747792	3.085810	12.641785	3.086088	10.633987
3.086076	14.782911	3.085961	9.040133	3.086227	9.740870	3.085961	12.584092	3.086227	10.594757
3.086215	14.810631	3.086088	9.047056	3.086366	9.736254	3.086088	12.537938	3.086366	10.615526
3.086354	14.764431	3.086227	9.021671	3.086505	9.731639	3.086227	12.524092	3.086505	10.627065
3.086493	14.688201	3.086366	9.037826	3.086643	9.729331	3.086366	12.475631	3.086643	10.647834
3.086632	14.623521	3.086505	9.104749	3.086817	9.715485	3.086505	12.429477	3.086817	10.592449
3.086806	14.563461	3.086643	9.042440	3.086991	9.703946	3.086643	12.392553	3.086991	10.599373
3.086979	14.586561	3.086817	9.049364	3.087164	9.703946	3.086817	12.314092	3.087164	10.643219
3.087153	14.496471	3.086991	9.146287	3.087338	9.687793	3.086991	12.321015	3.087338	10.654757
3.087327	14.461821	3.087164	9.058595	3.087570	9.690100	3.087164	12.212553	3.087570	10.622449
3.087558	14.415621	3.087338	9.017056	3.087801	9.667023	3.087338	12.175631	3.087801	10.645526
3.087789	14.350941	3.087570	9.049364	3.088032	9.662408	3.087570	12.117938	3.088032	10.622449
3.088021	14.281641	3.087801	9.060902	3.088264	9.662408	3.087801	12.051015	3.088264	10.615526
3.088252	14.244681	3.088032	9.030902	3.088495	9.639331	3.088032	12.014091	3.088495	10.622449
3.088484	14.184621	3.088264	9.113979	3.088727	9.630100	3.088264	11.949476	3.088727	10.622449
3.088715	14.205411	3.088495	9.044748	3.089074	9.600101	3.088495	11.887169	3.089074	10.594757
3.089062	14.032161	3.088727	9.035518	3.089421	9.600101	3.088727	11.864092	3.089421	10.599373

Table B.3-1:
Time and Water Level Data Values Used in Pumping Test Analysis: Dewey Test, Recovery Data

32-3C		49		324C		32-5		32-9C	
Time (days)	Drawdown (ft)	Time (days)	Drawdown (ft)	Time (days)	Drawdown (ft)	Time (days)	Drawdown (ft)	Time (days)	Drawdown (ft)
3.089410	14.025231	3.089074	9.060902	3.089768	9.570100	3.089074	11.815630	3.089768	10.576296
3.089757	13.847361	3.089421	9.051671	3.090116	9.558561	3.089421	11.762553	3.090116	10.580911
3.090104	12.685431	3.089768	9.042440	3.090463	9.535484	3.089768	11.658708	3.090463	10.615526
3.090451	12.315831	3.090116	9.047056	3.090810	9.512407	3.090116	11.617168	3.090810	10.594757
3.090799	12.163371	3.090463	9.040133	3.091157	9.500870	3.090463	11.511015	3.091157	10.587834
3.091146	12.066351	3.090810	9.100133	3.091505	9.473177	3.090810	11.492554	3.091505	10.585526
3.091493	11.960091	3.091157	9.060902	3.091852	9.459331	3.091157	11.439477	3.091852	10.567065
3.091840	12.001671	3.091505	9.063210	3.092199	9.440869	3.091505	11.342553	3.092199	10.562449
3.092187	11.782221	3.091852	9.058595	3.092893	9.413177	3.091852	11.296400	3.092893	10.530142
3.092882	11.675961	3.092199	9.060902	3.093588	9.364716	3.092199	11.261785	3.093588	10.520911
3.093576	11.574321	3.092893	9.042440	3.094282	9.337023	3.092893	11.178707	3.094282	10.490911
3.094271	11.470371	3.093588	9.067825	3.094977	9.295485	3.093588	11.049477	3.094977	10.453988
3.094965	11.331771	3.094282	9.072440	3.095683	9.256254	3.094282	10.952554	3.095683	10.488604
3.095671	11.375661	3.094977	9.056287	3.096366	9.233177	3.094977	10.869476	3.096366	10.414757
3.096354	11.204721	3.095683	9.023979	3.097060	9.189331	3.095683	10.823322	3.097060	10.382449
3.097049	11.160831	3.096366	9.056287	3.097755	9.161638	3.096366	10.703322	3.097755	10.363988
3.097743	11.103081	3.097060	9.030902	3.098796	9.108562	3.097060	10.613322	3.098796	10.373219
3.098785	11.001441	3.097755	9.049364	3.099838	9.073946	3.097755	10.592553	3.099838	10.292449
3.099826	10.885941	3.098796	9.148595	3.100880	9.013947	3.098796	10.463323	3.100880	10.287834
3.100868	10.761201	3.099838	9.118594	3.101921	8.970100	3.099838	10.435631	3.101921	10.225526
3.101910	10.719621	3.100880	9.070133	3.103310	8.910100	3.100880	10.322554	3.103310	10.264757
3.103299	10.511721	3.101921	9.017056	3.104699	8.857023	3.101921	10.255630	3.104699	10.188603
3.104687	10.403151	3.103310	9.123210	3.106088	8.808561	3.103310	10.119476	3.106088	10.147065
3.106076	10.289961	3.104699	9.047056	3.107477	8.762407	3.104699	10.043323	3.107477	10.093987
3.107465	10.206801	3.106088	9.026287	3.108866	8.713946	3.106088	9.957938	3.108866	10.070910
3.108854	10.116711	3.107477	8.998594	3.110255	8.658562	3.107477	9.946400	3.110255	10.063988
3.110243	9.950391	3.108866	9.095517	3.111643	8.628562	3.108866	9.780246	3.111643	10.031680
3.111632	9.878781	3.110255	8.989364	3.113380	8.563946	3.110255	9.717938	3.113380	10.001680
3.113368	9.719391	3.111643	8.970902	3.115116	8.520100	3.111643	9.648707	3.115116	9.946296
3.115104	9.532281	3.113380	9.074748	3.116852	8.462408	3.113380	9.561015	3.116852	9.893219
3.116840	9.310521	3.115116	9.012441	3.118588	8.402408	3.115116	9.473323	3.118588	9.851680
3.118576	9.218121	3.116852	8.963979	3.120903	8.344715	3.116852	9.447938	3.120903	9.807834
3.120891	9.091071	3.118588	9.047056	3.123217	8.287024	3.118588	9.339477	3.123217	9.782450
3.123206	9.116481	3.120903	9.014749	3.125532	8.243177	3.120903	9.277169	3.125532	9.720141
3.125521	8.975571	3.123217	8.959364	3.127847	8.173946	3.123217	9.147938	3.127847	9.676295
3.127836	8.890101	3.125532	8.846287	3.130162	8.123177	3.125532	9.067169	3.130162	9.680911
3.130150	8.834661	3.127847	8.825518	3.132477	8.077024	3.127847	9.011785	3.132477	9.648603
3.132465	8.751501	3.130162	8.807055	3.135949	8.007792	3.130162	8.935631	3.135949	9.521680
3.135937	8.700681	3.132477	8.848595	3.139421	7.938561	3.132477	8.887169	3.139421	9.477834
3.139410	8.594421	3.135949	8.721671	3.142893	7.878561	3.135949	8.790246	3.142893	9.431680

Table B.3-1:
Time and Water Level Data Values Used in Pumping Test Analysis: Dewey Test, Recovery Data

32-3C		49		324C		32-5		32-9C	
Time (days)	Drawdown (ft)	Time (days)	Drawdown (ft)	Time (days)	Drawdown (ft)	Time (days)	Drawdown (ft)	Time (days)	Drawdown (ft)
3.142882	8.522811	3.139421	8.788594	3.146366	7.825485	3.139421	8.695630	3.146366	9.380911
3.146354	8.435031	3.142893	8.640903	3.149838	7.765485	3.142893	8.603323	3.149838	9.290911
3.149826	8.405001	3.146366	8.564748	3.153310	7.707792	3.146366	8.541015	3.153310	9.265527
3.153299	8.287191	3.149838	8.550902	3.156782	7.661639	3.149838	8.448708	3.156782	9.203218
3.156771	8.217891	3.153310	8.493210	3.160301	7.615485	3.153310	8.377169	3.160255	9.131680
3.160243	8.190171	3.156829	8.467825	3.163773	7.569331	3.156782	8.351784	3.163762	9.136295
3.163715	8.109321	3.160301	8.456286	3.167361	7.523177	3.160255	8.268707	3.167350	9.071680
3.167268	8.042331	3.163773	8.370902	3.174421	7.435485	3.163727	8.229477	3.174410	8.947064
3.174329	7.991511	3.167361	8.366286	3.181250	7.345485	3.167315	8.079476	3.181238	8.877834
3.181157	7.859841	3.174421	8.211671	3.188194	7.283177	3.174375	8.051785	3.188183	8.697834
3.188102	7.746651	3.181250	8.133210	3.195139	7.202408	3.181204	7.917938	3.195127	8.686296
3.195046	7.614981	3.188194	8.057055	3.202083	7.091639	3.188148	7.804861	3.202072	8.637834
3.201991	7.612671	3.195139	7.948595	3.209028	7.057023	3.195092	7.744861	3.209016	8.547834
3.208935	7.501791	3.202083	7.874748	3.215972	6.999331	3.202037	7.645630	3.215961	8.473988
3.215880	7.404771	3.209028	7.752440	3.222917	6.932408	3.208981	7.583323	3.222905	8.377065
3.222824	7.360881	3.215972	7.724748	3.233333	6.840100	3.215926	7.502553	3.233322	8.268603
3.233241	7.215351	3.222917	7.625517	3.243750	6.773177	3.222870	7.449477	3.243738	8.171680
3.243657	7.150671	3.233333	7.526287	3.254167	6.715485	3.233287	7.225630	3.254155	8.056295
3.254074	7.060581	3.243750	7.408595	3.264583	6.641639	3.243704	7.188707	3.264572	7.980142
3.264491	6.986661	3.254167	7.297825	3.278472	6.540100	3.254120	7.114861	3.278461	7.827834
3.278380	6.873471	3.264583	7.189363	3.292361	6.457023	3.264537	6.939476	3.292350	7.747065
3.292268	6.755661	3.278472	7.041671	3.306250	6.392408	3.278426	6.918707	3.306238	7.645526
3.306157	6.684051	3.292361	6.960902	3.320139	6.270100	3.292315	6.798707	3.320127	7.509372
3.320046	6.575481	3.306250	6.866287	3.334028	6.203177	3.306204	6.701784	3.334016	7.451680
3.333935	6.462291	3.320139	6.737056	3.347917	6.122408	3.320092	6.600246	3.347905	7.264757
3.347824	6.448431	3.334028	6.633210	3.361806	6.062408	3.333981	6.503323	3.361794	7.234757
3.361713	6.295971	3.347917	6.524748	3.379167	6.025485	3.347870	6.369476	3.379155	7.123988
3.379074	6.265941	3.361806	6.471671	3.396528	5.949331	3.361759	6.327938	3.396516	7.024757
3.396435	6.166611	3.379167	6.328594	3.413889	5.889331	3.379120	6.270246	3.413877	6.925526
3.413796	6.023391	3.396528	6.284748	3.431250	5.817792	3.396481	6.159477	3.431238	6.793988
3.431157	6.060351	3.413889	6.167056	3.454398	5.750869	3.413842	6.083323	3.454387	6.690142
3.454306	5.935611	3.431250	6.081671	3.477546	5.667792	3.431204	6.027938	3.477535	6.593219
3.477454	5.778531	3.454398	5.966287	3.500694	5.593946	3.454352	5.850246	3.500683	6.477834
3.500602	5.746191	3.477546	5.910902	3.523958	5.536254	3.477500	5.861784	3.523947	6.403988
3.523866	5.702301	3.500694	5.781672	3.546991	5.471639	3.500648	5.757938	3.546979	6.247065
3.546898	5.623761	3.523958	5.774748	3.570139	5.413946	3.523912	5.688707	3.570127	6.173219
3.570046	5.556771	3.546991	5.721671	3.604861	5.330869	3.546945	5.568707	3.604850	6.060142
3.604768	5.480541	3.570139	5.523210	3.639583	5.240870	3.570092	5.527169	3.639572	5.910141
3.639491	5.369661	3.604861	5.433210	3.674306	5.155485	3.604815	5.455630	3.674294	5.700142
3.674213	5.231061	3.639583	5.322441	3.709028	5.047023	3.639537	5.310246	3.709016	5.658603

Table B.3-1:
Time and Water Level Data Values Used in Pumping Test Analysis: Dewey Test, Recovery Data

32-3C		49		324C		32-5		32-9C	
Time (days)	Drawdown (ft)	Time (days)	Drawdown (ft)	Time (days)	Drawdown (ft)	Time (days)	Drawdown (ft)	Time (days)	Drawdown (ft)
3.708935	5.138661	3.674306	5.269363	3.743750	4.991639	3.674259	5.241015	3.743738	5.527065
3.743657	5.069361	3.709028	5.172441	3.778472	4.931639	3.708981	5.155631	3.778461	5.427834
3.778380	5.030091	3.743750	5.036287	3.813542	4.873946	3.743704	5.001015	3.813530	5.395526
3.813449	4.916901	3.778472	4.967056	3.847917	4.811638	3.778426	4.975630	3.847905	5.270911
3.847824	4.900731	3.813542	4.890902	3.882639	4.767792	3.813495	4.941015	3.882627	5.180911
3.882546	4.856841	3.847917	4.853979	3.917361	4.726254	3.847870	4.864861	3.917350	5.148603
3.917268	4.782921	3.882639	4.784748	3.986806	4.633946	3.882592	4.846400	3.986794	4.952449
3.986713	4.655871	3.917361	4.724748	4.056944	4.543946	3.917315	4.733323	4.056933	4.825526
4.056852	4.651251	3.986806	4.727056	4.125694	4.444715	3.986759	4.657169	4.125683	4.723988
4.125602	4.512651	4.056944	4.540133	4.195139	4.301639	4.056898	4.594861	4.195127	4.523219
4.195046	4.337091	4.125694	4.413210	4.264583	4.211638	4.125648	4.511784	4.264572	4.465526
4.264491	4.274721	4.195139	4.293210	4.334028	4.110100	4.195092	4.366400	4.334016	4.317834
4.333935	4.221591	4.264583	4.267825	4.403472	4.029331	4.264537	4.248707	4.403461	4.181680
4.403380	4.076061	4.334028	4.092441	4.472917	3.985485	4.333981	4.126400	4.472905	4.163218
4.472824	4.020621	4.403472	4.069364	4.577083	3.886254	4.403426	4.041015	4.577072	4.031680
4.576991	3.875091	4.472917	3.983979	4.681250	3.775485	4.472870	4.015630	4.681238	3.842449
4.681157	3.849681	4.577083	3.843210	4.785417	3.662408	4.577037	3.826400	4.785405	3.727065
4.785324	3.715701	4.681250	3.732440	4.889583	3.574715	4.681204	3.810246	4.889572	3.669373
4.889491	3.604821	4.785417	3.598594	5.028472	3.431638	4.785370	3.639477	5.028461	3.487065
5.028380	3.558621	4.889583	3.492440	5.167361	3.279331	4.889537	3.597938	5.167350	3.362449
5.167268	3.357651	5.028472	3.407056	5.306250	3.076254	5.028426	3.466400	5.306238	3.157065
5.306157	3.154371	5.167361	3.323979	5.445139	2.944715	5.167315	3.309477	5.445127	2.960911
5.445046	2.997291	5.306250	3.130133	5.584028	2.810869	5.306204	3.092553	5.584016	2.917065
5.583935	2.837901	5.445139	2.869364	5.722917	2.674716	5.445092	2.947169	5.722905	2.713988
5.722824	2.738571	5.584028	2.777056	5.861806	2.552408	5.583981	2.852553	5.861794	2.582449
5.861713	2.653101	5.722917	2.622441	6.008217	2.469331	5.722871	2.661015	6.008206	2.513219
6.008125	2.521431	5.861806	2.479364			5.861759	2.497169		
		6.008217	2.403210			6.008171	2.494861		

General Methodology: PSI, temperature, and time readings from Win-Situ™ digital data log were exported to Excel ".csv" file.
Drawdown was calculated as PSI at time after pumping minus average PSI before pumping; therefore, at small or zero changes in PSI negative drawdowns may be calculated.
A FORTRAN program was written to read the ".csv" file and produce a second file by extracting the records at a frequency of 40 per log-time cycle (in minutes) in order achieve equal representation of data throughout the pumping and drawdown phases of the test.

Knight Piésold
CONSULTING

Appendix B-4
Additional Aquifer Parameter Determinations

Theis

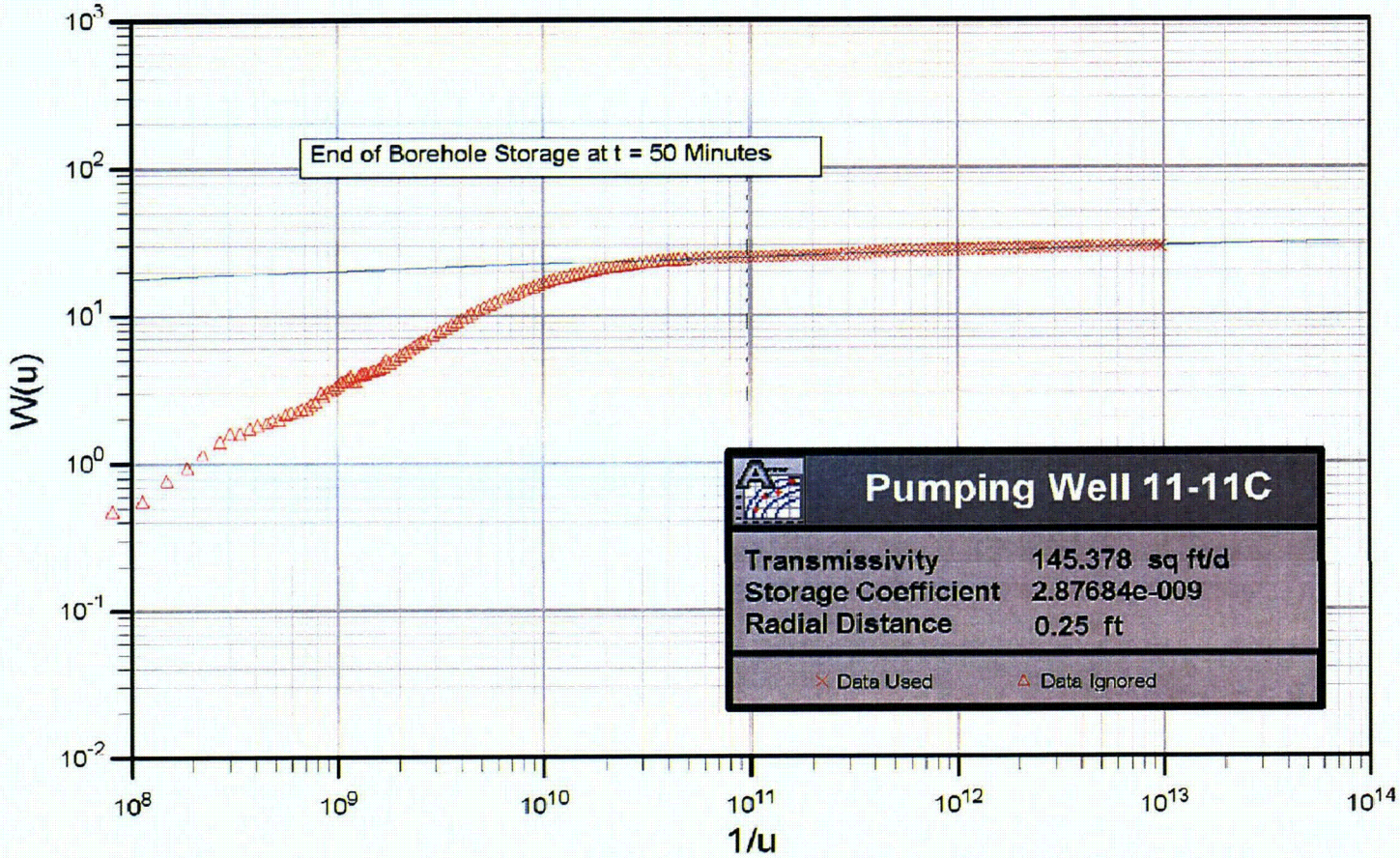

Client	Project	Title	
Knight Piésold CONSULTING	DEWEY-BURDOCK HYDROGEOLOGIC TESTING REPORT	Theis Drawdown Analysis at Burdock Pumping Well 11-11C	
	Project No: DV10200279.01	Date: 10/16/08	Appendix C, Figure C.4-1

Theis

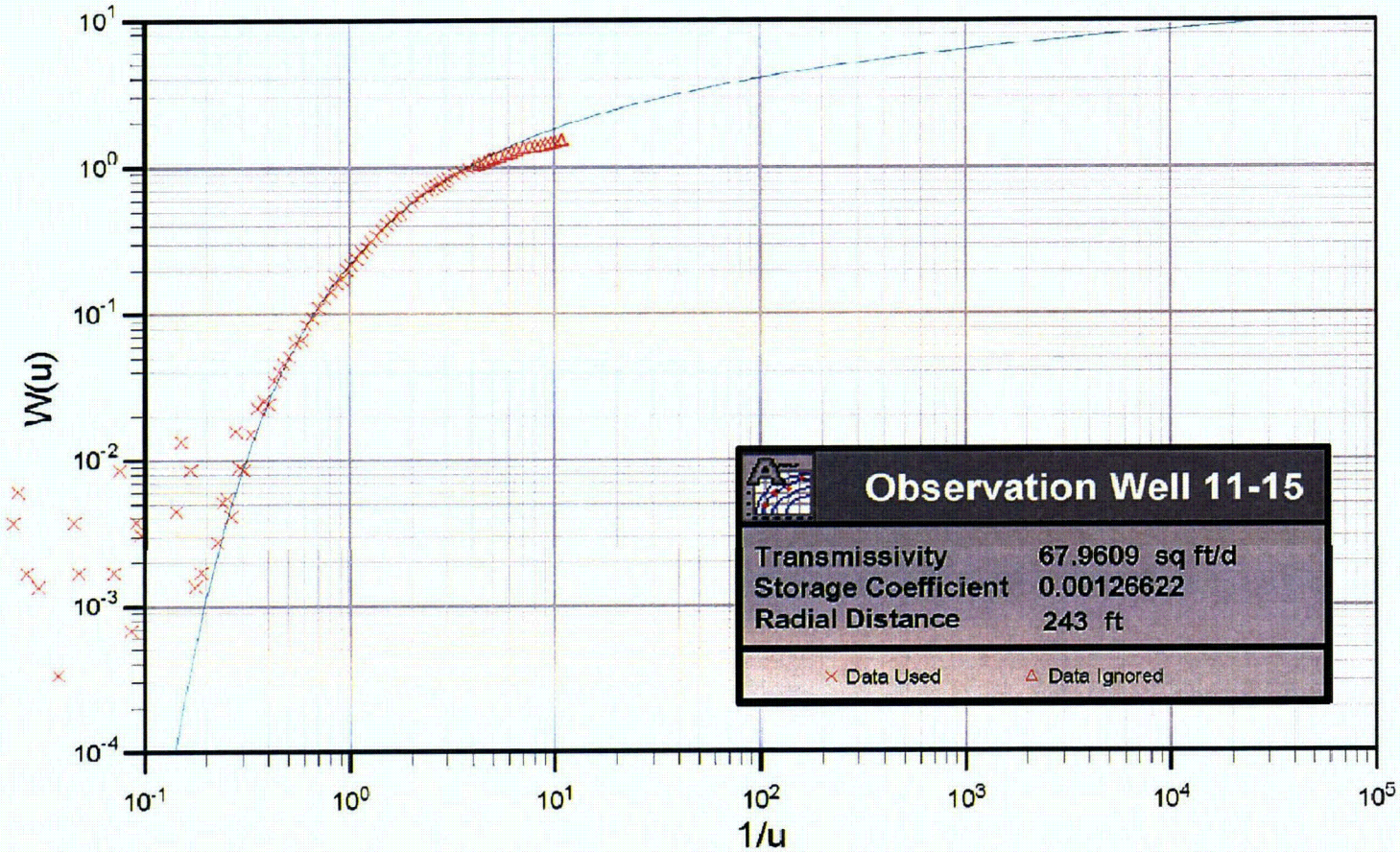

Client	Project	Title	
Knight Piésold CONSULTING	DEWEY-BURDOCK HYDROGEOLOGIC TESTING REPORT	Theis Drawdown Analysis at Burdock Observation Well 11-15	
	Project No: DV10200279.01	Date: 10/16/08	Appendix C, Figure C.4-2

Theis

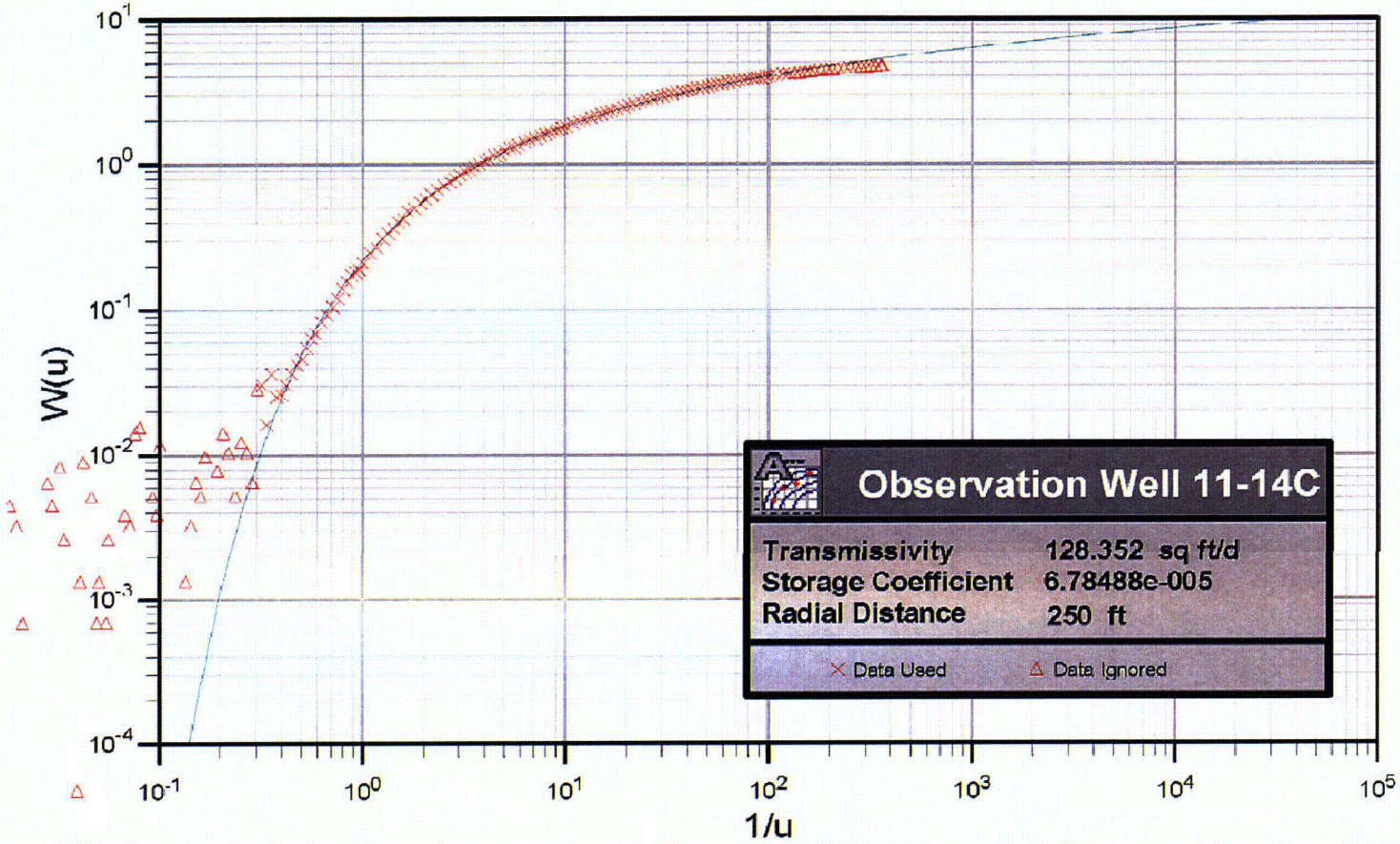

Client	Project	Title	
Knight Piésold CONSULTING	DEWEY-BURDOCK HYDROGEOLOGIC TESTING REPORT	Theis Drawdown Analysis at Burdock Observation Well 11-14C	
	Project No: DV10200279.01	Date: 10/16/08	Appendix C, Figure C.4-3

Theis Recovery

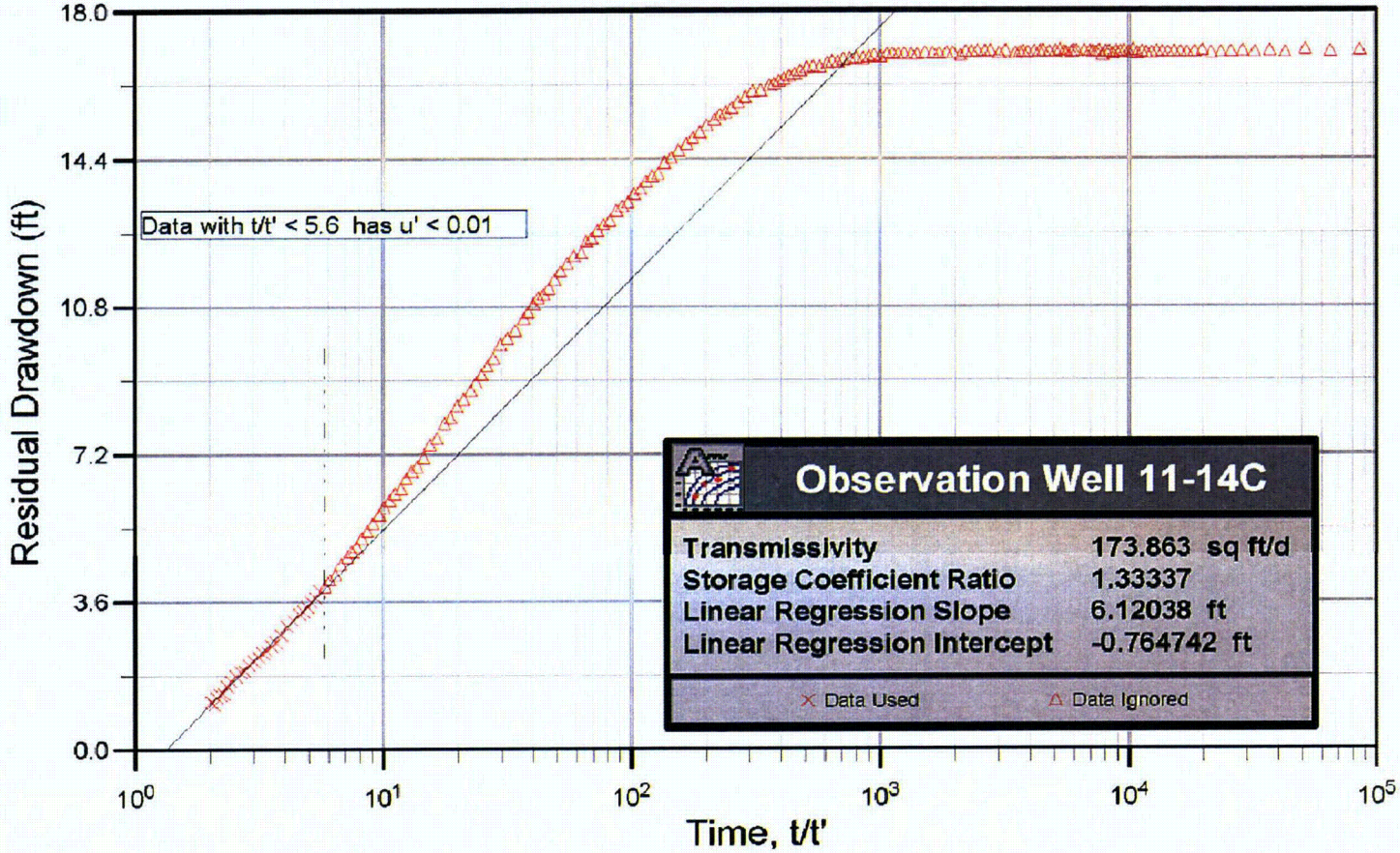

Client	Project	Title	
Knight Piésold CONSULTING	DEWEY-BURDOCK HYDROGEOLOGIC TESTING REPORT	Theis Recovery Analysis at Burdock Observation Well 11-14C	
	Project No: DV10200279.01	Date: 10/16/08	Appendix C, Figure C.4-4

Theis

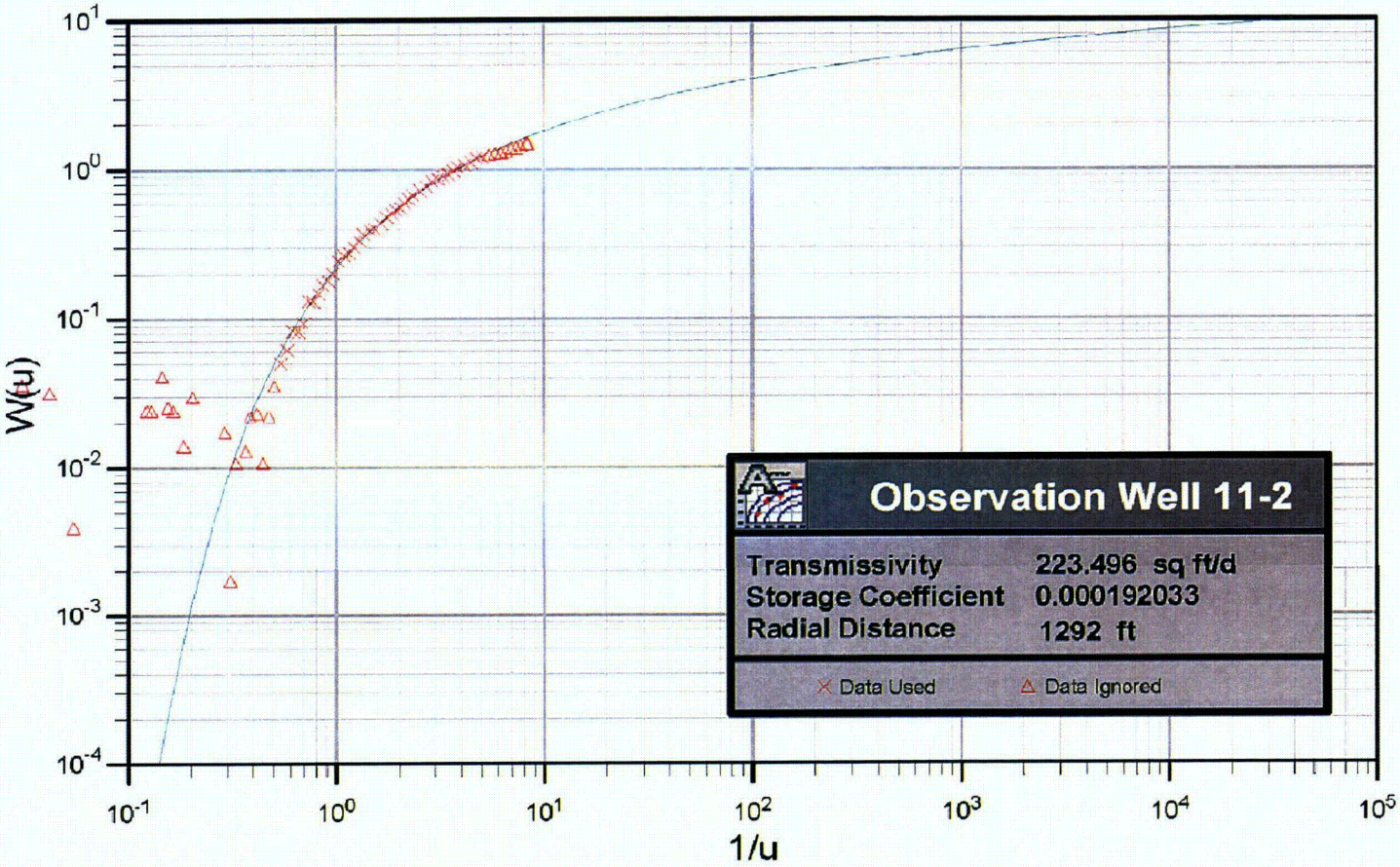

Client	Project	Title	
Knight Piésold CONSULTING	DEWEY-BURDOCK HYDROGEOLOGIC TESTING REPORT	Theis Drawdown Analysis at Burdock Observation Well 11-2	
	Project No: DV10200279.01	Date: 10/16/08	Appendix C, Figure C.4-5

Hantush and Jacob (1955)

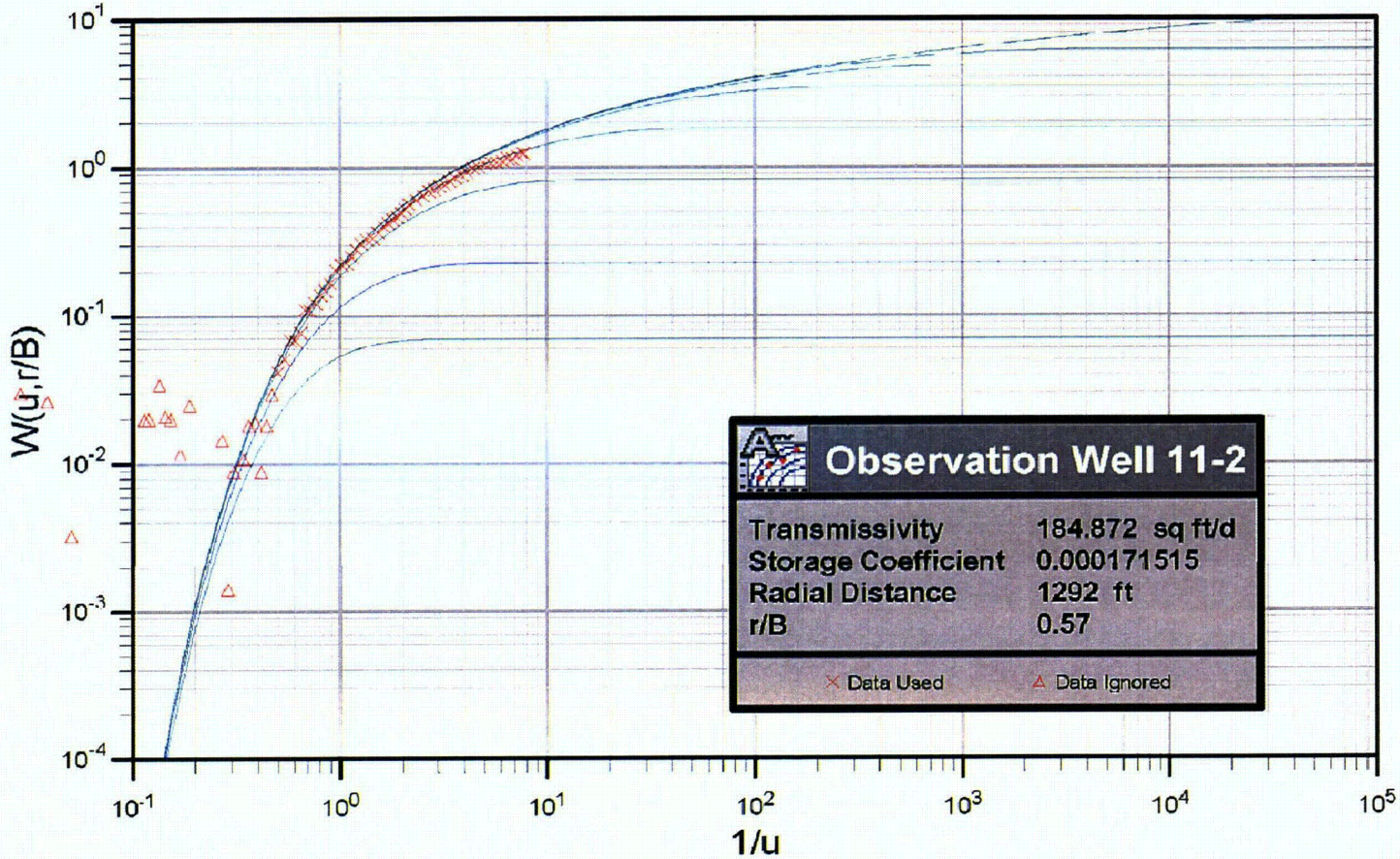

Client	Project	Title	
Knight Piésold CONSULTING	DEWEY-BURDOCK HYDROGEOLOGIC TESTING REPORT	Hantush-Jacob Leaky Confined Aquifer Analysis at Burdock Observation Well 11-2	
	Project No: DV10200279.01	Date: 10/16/08	Appendix C, Figure C.4-6

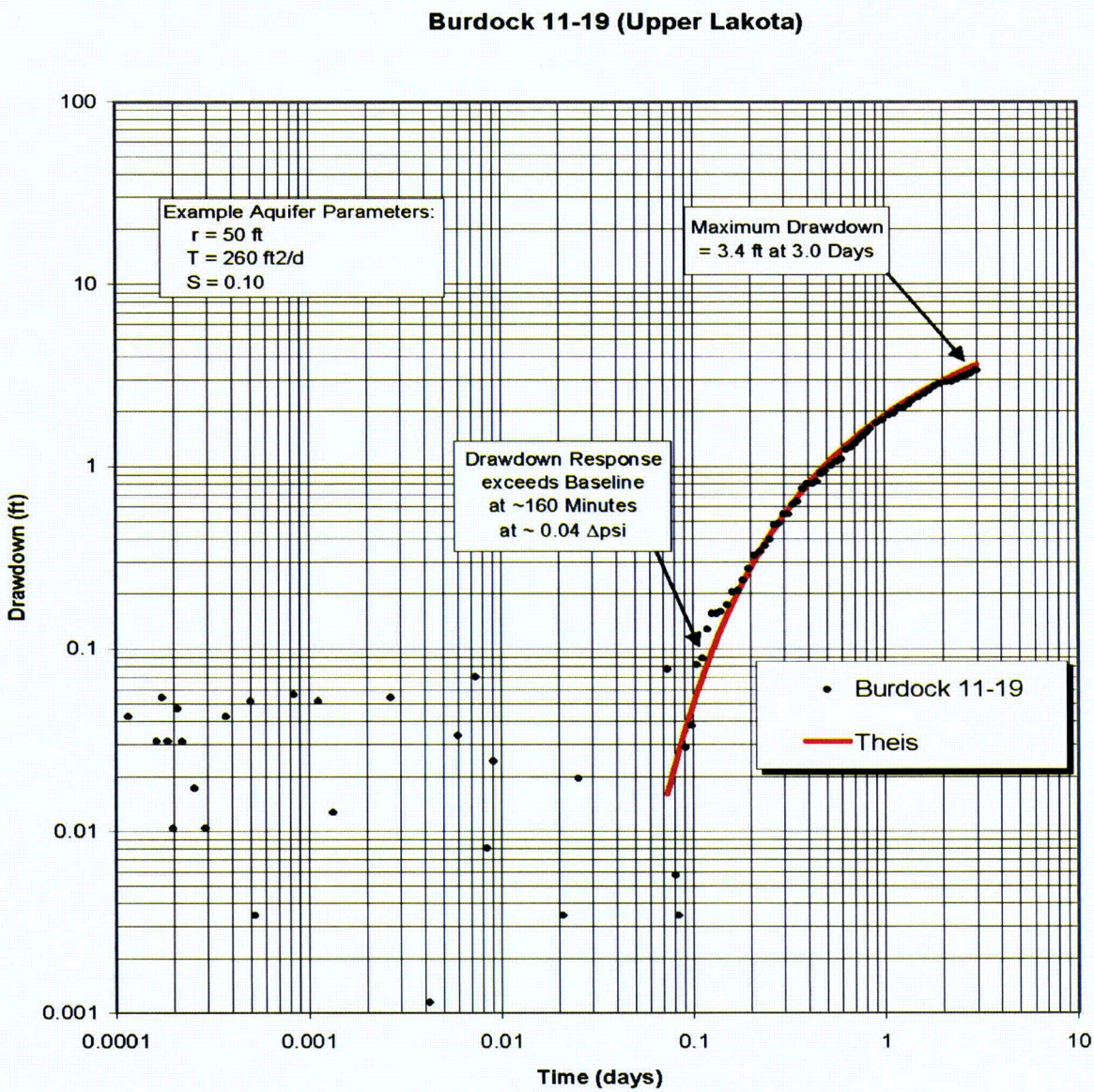

Client	Project	Title	
Knight Piésold CONSULTING	DEWEY-BURDOCK HYDROGEOLOGIC TESTING REPORT	Drawdown and Analysis at Burdock Test Observation Well 11-19 (Upper Lakota)	
	Project No: DV10200279.01	Date: 10/16/08	Appendix C, Figure C.4-7

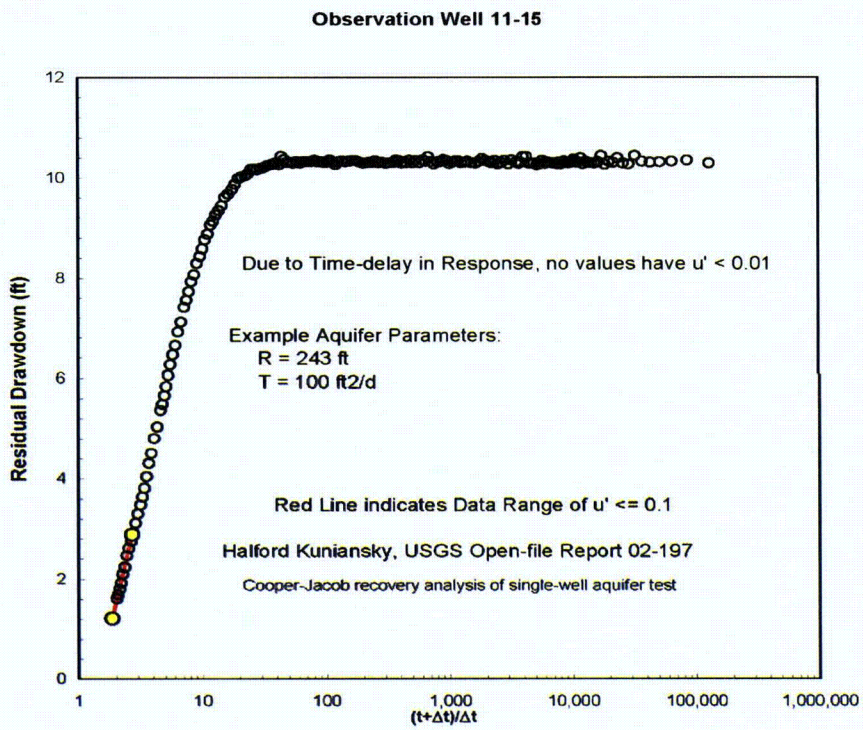

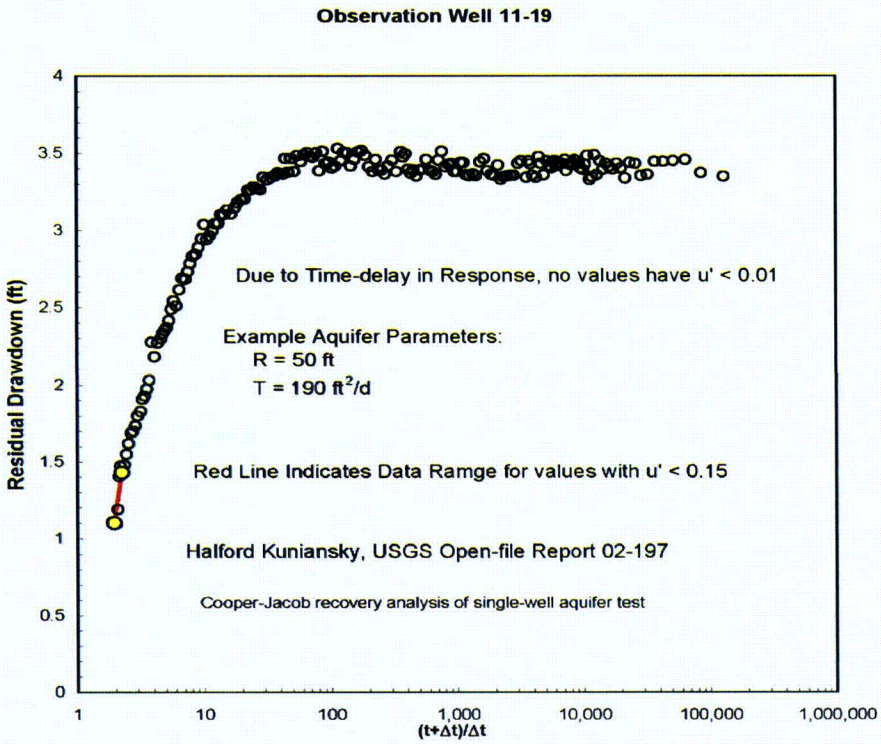

Client	Project	Title	
Knight Piésold CONSULTING	DEWEY-BURDOCK HYDROGEOLOGIC TESTING REPORT	Theis-Cooper-Jacob Recovery Analyses at Burdock Observation Wells 11-15 and 11-19	
	Project No: DV10200279.01	Date: 10/16/08	Appendix C, Figure C.4-8

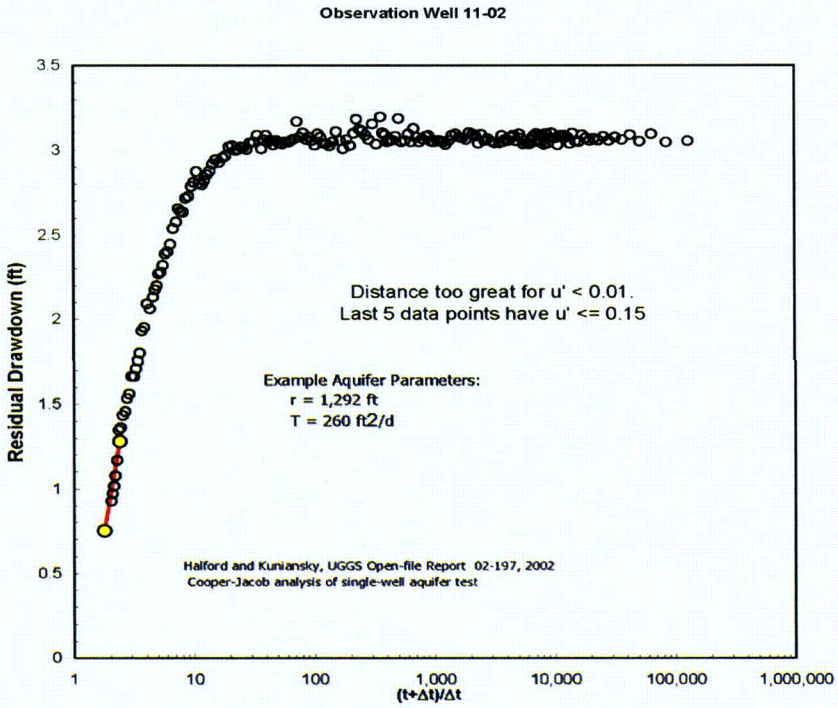

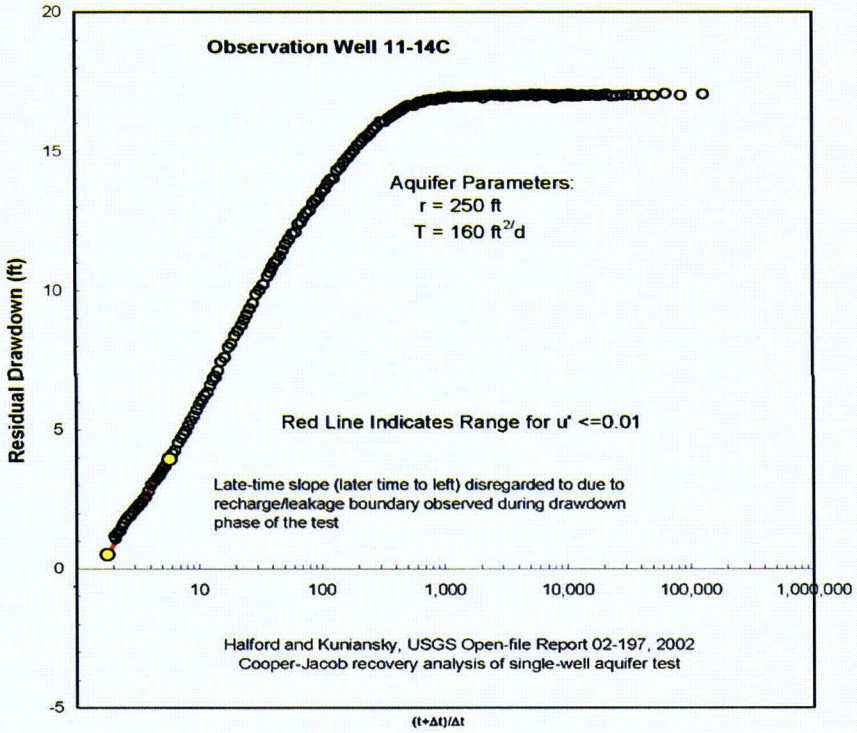

Client	Project	Title	
Knight Piésold CONSULTING	DEWEY-BURDOCK HYDROGEOLOGIC TESTING REPORT	Theis-Cooper-Jacob Recovery at Burdock Observation Wells 11-14C and 11-02	
	Project No: DV10200279.01	Date: 10/16/08	Appendix C, Figure C.4-9

Knight Piésold
CONSULTING

Appendix C
Burdock Test Supplemental Information

Appendix C-1:	Well Completion Diagrams
Appendix C-2:	Time and Water Level Data Values Used in Pumping Test Analysis: Burdock Test, Drawdown Data
Appendix C-3:	Time and Water Level Data Values Used in Pumping Test Analysis: Burdock Test, Recover Data
Appendix C-4:	Additional Aquifer Parameter Determinations

Knight Piésold
CONSULTING

Appendix C-1
Well Completion Diagrams

POWERTECH WELL AND PUMP DATA

Location of Well Burdock, SD	Drilling Contractor Davis Drilling	Driller Tony	Well Name DB07-11-11C
County Fall River	Type of Rig	Drilling Fluid mud	Well Depth 436'
LAT 4811660N	LONG 583455E	Elevation 4163'	Datum point from which all measurements are taken

Screened Monitoring Well Completion Detail

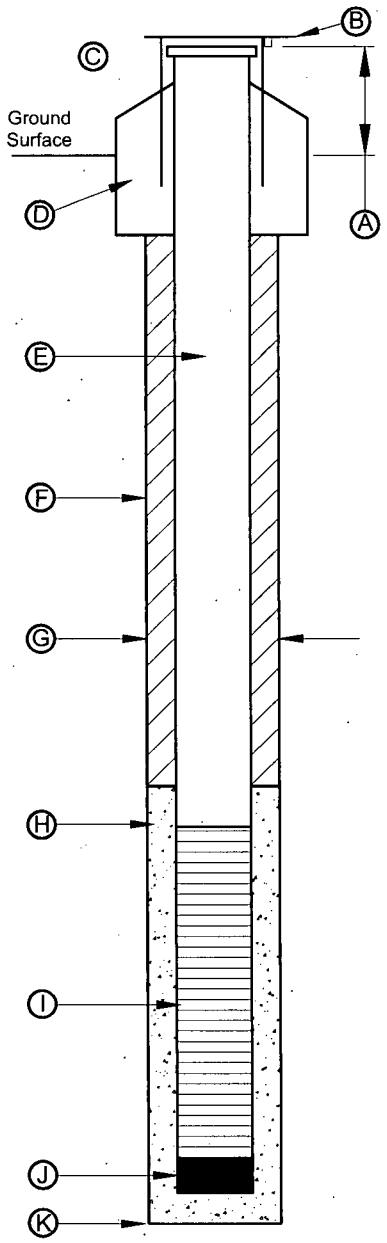

Screened Well No.

A. Stick-up Length 2.0'
B. Key No. NA
C. Protective Casing
- Diameter NA
- Material NA
- Length NA
- Depth to Bottom NA

D. Surface Completion
- Diameter NA
- Depth NA
- Material NA

E. Well Casing Data
- Diameter 6" ID
- Material PVC
- Length 428'
- Weight SCH 40
- Depth to Bottom 426'

F. Grout cement Date 10/30/07
- Depth to Top 0'
- Depth to Bottom 427'
- Material sulfate resis. cement
- Density 15.2b/gal
- Volume 24.1 bbls
- % Excess 50
- Method of Installation displacement
- Depth to Cement in Casing 396'
- Return Constant ☐ Yes ☒ No
- Volume of Grout Return 0

G. Borehole Diameter
- Drilling Dates 6.5" 10/10/07

H. Pack Type/Size NA Date NA
- Depth to Top NA
- Depth to Bottom
- Material
- Method of Installation
- Gradation

I. Screen Date 12/18/08
- Depth to Top 426-436"
- Depth to Bottom
- Manufacturer
- Material PVC
- Slot .01"

J. Bottom Cap
- Material PVC
- Length 1"
- Driller Tony

Boring Depth 495'TD 418' casing'

Additional Information

Method of Drilling Date: 10/10/07

- ☐ Cabel Tool
- ☒ Direct Rotary
- ☐ Bucket Auger
- ☐ Flight Auger
- ☐ Dug
- ☐ Other mud rotary
- ☐ Hollow Rod
- ☐ Air Rotary
- ☐ Reverse Rotary
- ☐ Jetted
- ☐ Driven

Use

- ☐ Domestic
- ☐ Industrial
- ☐ Municipal
- ☐ Test Well
- ☒ Monitoring
- ☐ Other
- ☐ Public Supply
- ☐ Irrigation
- ☐ Commercial
- ☐ Heating or Cooling

One well volume (V) = gallons

Initial Development Water
Water Level (TIC) ____
Well Depth ____
Color ____
Odor
Clarity ____
Developed By ____
Date ____
Well Development Date ____
Description of Development Technique

Pump
Date Installed ____ Type ____
Manufacturer ____ Model No. ____
H.P. ____ Volts ____
Capacity ____
Depth of Pump Intake Setting ____
No. of Stages ____
☐ Oil ☐ Water Lubrication
Power Source ____
Material of drop pipe ____
Bowls ____
Shafting ____ Impellors ____
Bowl Diameter ____
Column Pipe Diameter ____ Length ____
Modification ____

Geophysical Logs Run Gamma, Resistivity, SP, ran 10/10/07

******Mechanical Integrity Test******

PSI Increments		Calibration Date of Gage	
PSI Full Scale			
Test Run By	Stan Davis, Len Eakin	Date Test Run	12/13/08
Time Beginning of Test	0900	Time End of Test	1100
Initial Pressure	35.0PSIG	Initial Fluid Level	5.0 inches
Final Pressure	35.0PSIG	Final Fluid Level	5.0inches

Water Quality
Sample taken? ☐ Yes ☐ No
Where analyzed?

Date well completed 12/18/08

WELL DEVELOPMENT RECORD – PARAMETER MEASUREMENTS

Well No.	Time	Total Volume Withdrawal		pH	Conductivity (ms/cm)	Temp (°C)	Turbidity (NTU)	Comments
		Gallons	Borehole Volume					
11-11c	1400						appears cl.	12/18/08 well developed
	1430							water appeared clear within 5 minutes
								approx. 30 gpm while pumping
								150psi kickoff, 90psi sustained

POWERTECH WELL AND PUMP DATA

Location of Well Burdock, SD	Drilling Contractor Davis Drilling	Driller Tony	Well Name DB07-11-14C
County Fall River	Type of Rig	Drilling Fluid mud	Well Depth 423'
LAT 4811591N	LONG 583496E	Elevation 3645'	Datum point from which all measurements are taken

Screened Monitoring Well Completion Detail

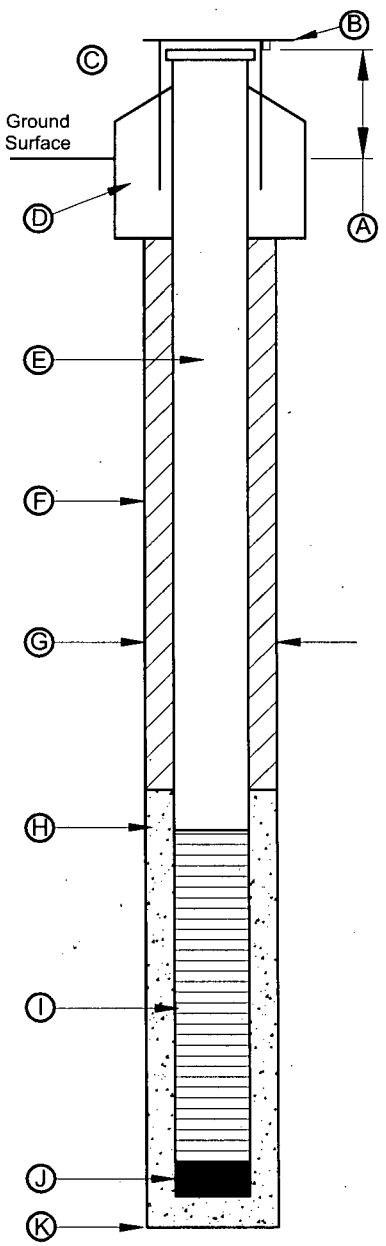

Screened Well No.

A. Stick-up Length 2.0'
B. Key No. NA
C. Protective Casing
Diameter NA
Material NA
Length NA
Depth to Bottom NA
D. Surface Completion
Diameter NA
Depth NA
Material NA
E. Well Casing Data
Diameter 4" ID
Material PVC
Length 415'
Weight SCH 40
Depth to Bottom 413'
F. Grout cement Date 11/3/07
Depth to Top 0'
Depth to Bottom 414'
Material sulfate resis. cement
Density 15.2b/gal
Volume 15.8 bbls
% Excess 50
Method of Installation displacement
Depth to Cement in Casing 303'
Return Constant ☐ Yes ☒ No
Volume of Grout Return 0
G. Borehole Diameter
Drilling Dates 6.25" 11/2/07
H. Pack Type/Size NA Date NA
Depth to Top NA
Depth to Bottom
Material
Method of Installation
Gradation
I. Screen Date 2/13/08
Depth to Top 413-423'
Depth to Bottom
Manufacturer
Material PVC
Slot .01"
J. Bottom Cap
Material PVC
Length 1"
Driller Tony
Boring Depth 460'TD 415' ream'

Additional Information

Method of Drilling Date: 11/2/07
☐ Cabel Tool ☐ Hollow Rod
☒ Direct Rotary ☐ Air Rotary
☐ Bucket Auger ☐ Reverse Rotary
☐ Flight Auger ☐ Jetted
☐ Dug ☐ Driven
☐ Other mud rotary

Use
☐ Domestic ☐ Public Supply
☐ Industrial ☐ Irrigation
☐ Municipal ☐ Commercial
☐ Test Well ☐ Heating or Cooling
☒ Monitoring
☐ Other

One well volume (V) = gallons
Initial Development Water
Water Level (TIC)
Well Depth
Color
Odor
Clarity
Developed By
Date
Well Development Date
Description of Development Technique

Pump
Date Installed Type
Manufacturer Model No.
H.P. Volts
Capacity
Depth of Pump Intake Setting
No. of Stages
☐ Oil ☐ Water Lubrication
Power Source
Material of drop pipe
Bowls
Shafting Impellors
Bowl Diameter
Column Pipe Diameter Length
Modification

Geophysical Logs Run Gamma, Resistivity, SP, ran 11/2/07

Water Quality
Sample taken? ☐ Yes ☐ No
Where analyzed?

Date well completed 2/13/08

******Mechanical Integrity Test******

PSI Increments		Calibration Date of Gage	
PSI Full Scale			
Test Run By	Stan Davis, Len Eakin	Date Test Run	2/12/08
Time Beginning of Test	1400	Time End of Test	1445
Initial Pressure	40.0PSIG	Initial Fluid Level	5.0 inches
Final Pressure	40.0PSIG	Final Fluid Level	5.0inches

WELL DEVELOPMENT RECORD – PARAMETER MEASUREMENTS

Well No.	Time	Total Volume Withdrawal		pH	Conductivity (ms/cm)	Temp (°C)	Turbidity (NTU)	Comments
		Gallons	Borehole Volume					
11-14c	1500						appears cl.	2/13/08 well developed
	1530							water cleared up in approx. 3 minutes
								approx. 30 gpm while pumping
								150psi kickoff, 100psi sustained

POWERTECH WELL AND PUMP DATA

Location of Well Burdock, SD	Drilling Contractor Davis Drilling	Driller Tony	Well Name DB07-11-15
County Fall River	Type of Rig	Drilling Fluid mud	Well Depth 428'
LAT 4811590N	LONG 583428E	Elevation 3710'	Datum point from which all measurements are taken

Screened Monitoring Well Completion Detail

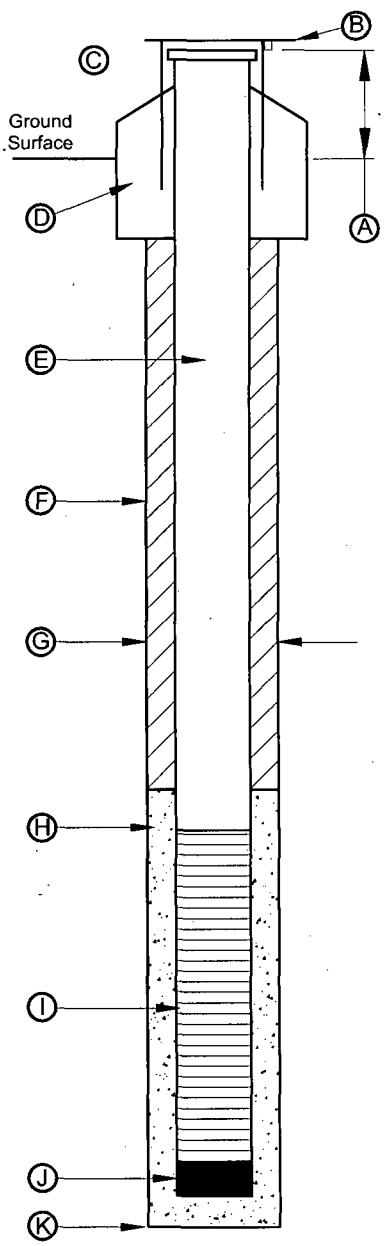

Screened Well No.

A. Stick-up Length 2.0'

B. Key No. NA

C. Protective Casing
- Diameter NA
- Material NA
- Length NA
- Depth to Bottom NA

D. Surface Completion
- Diameter NA
- Depth NA
- Material NA

E. Well Casing Data
- Diameter 4" ID
- Material PVC
- Length 420'
- Weight SCH 40
- Depth to Bottom 418'

F. Grout cement Date 11/5/07
- Depth to Top 0'
- Depth to Bottom 419'
- Material sulfate resis. cement
- Density 15.2b/gal
- Volume 15.7 bbls
- % Excess 50
- Method of Installation displacement
- Depth to Cement in Casing 290'
- Return Constant ☐ Yes ☒ No
- Volume of Grout Return 0

G. Borehole Diameter
- Drilling Dates 6.5" 11/4/07

H. Pack Type/Size NA Date NA
- Depth to Top NA
- Depth to Bottom
- Material
- Method of Installation
- Gradation

I. Screen Date 2/24/08
- Depth to Top 418-428'
- Depth to Bottom
- Manufacturer
- Material PVC
- Slot .01"

J. Bottom Cap
- Material PVC
- Length 1"
- Driller Tony

Boring Depth 495'TD 418' casing'

Additional Information

Method of Drilling — Date: 11/4/07
- ☐ Cabel Tool
- ☒ Direct Rotary
- ☐ Bucket Auger
- ☐ Flight Auger
- ☐ Dug
- ☐ Hollow Rod
- ☐ Air Rotary
- ☐ Reverse Rotary
- ☐ Jetted
- ☐ Driven
- ☐ Other mud rotary

Use
- ☐ Domestic
- ☐ Industrial
- ☐ Municipal
- ☐ Test Well
- ☒ Monitoring
- ☐ Other
- ☐ Public Supply
- ☐ Irrigation
- ☐ Commercial
- ☐ Heating or Cooling

One well volume (V) = gallons

Initial Development Water
- Water Level (TIC)
- Well Depth
- Color
- Odor
- Clarity
- Developed By
- Date
- Well Development Date
- Description of Development Technique

Pump
- Date Installed
- Type
- Manufacturer
- Model No.
- H.P.
- Volts
- Capacity
- Depth of Pump Intake Setting
- No. of Stages
- ☐ Oil ☐ Water Lubrication
- Power Source
- Material of drop pipe
- Bowls
- Shafting
- Impellors
- Bowl Diameter
- Column Pipe Diameter
- Length
- Modification

Geophysical Logs Run Gamma, Resistivity, SP, ran 11/4/07

Water Quality
- Sample taken? ☐ Yes ☐ No
- Where analyzed?

Date well completed 2/24/08

******Mechanical Integrity Test******

PSI Increments		Calibration Date of Gage	
PSI Full Scale			
Test Run By	Stan Davis, Len Eakin	Date Test Run	2/9/08
Time Beginning of Test	0930	Time End of Test	1015
Initial Pressure	40.0PSIG	Initial Fluid Level	5.0 inches
Final Pressure	40.0PSIG	Final Fluid Level	5.0inches

WELL DEVELOPMENT RECORD – PARAMETER MEASUREMENTS

Well No.	Time	Total Volume Withdrawal		pH	Conductivity (ms/cm)	Temp (°C)	Turbidity (NTU)	Comments
		Gallons	Borehole Volume					
11-15	1400						appears cl.	2/12/08 well initially developed
	1430							water appeared clear instantly
								less than 1 gpm while pumping
								100psi kickoff, 50psi sustained
								v. slow recharge, we suspect cement is covering formation. will retrieve screen and shoot with perf. truck to clean off cement
								2/23-2/24/08 came back to well, pulled screen, perforated screen interval, and developed again. made 2-3gpm, but recharged much more quickly

POWERTECH WELL AND PUMP DATA

Location of Well Burdock, SD	Drilling Contractor Davis Drilling	Driller Tony	Well Name DB07-11-2
County Fall River	Type of Rig	Drilling Fluid mud	Well Depth 460'
LAT 4811591N	LONG 583496E	Elevation 3645'	Datum point from which all measurements are taken

Screened Monitoring Well Completion Detail

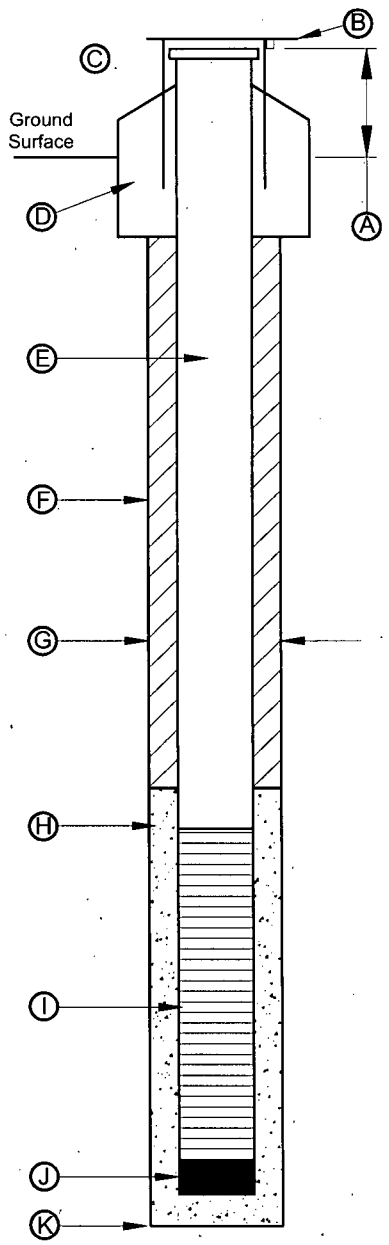

Screened Well No.

A. Stick-up Length 2.0'
B. Key No. NA
C. Protective Casing
- Diameter NA
- Material NA
- Length NA
- Depth to Bottom NA

D. Surface Completion
- Diameter NA
- Depth NA
- Material NA

E. Well Casing Data
- Diameter 4" ID
- Material PVC
- Length 415'
- Weight SCH 40
- Depth to Bottom 450'

F. Grout cement Date 10/21/07
- Depth to Top 0'
- Depth to Bottom 451'
- Material sulfate resis. cement
- Density 15.2b/gal
- Volume 17.0 bbls
- % Excess 50
- Method of Installation displacement
- Depth to Cement in Casing 370'
- Return Constant ☐ Yes ☒ No
- Volume of Grout Return 0

G. Borehole Diameter
- Drilling Dates 6.5" 6/2/07

H. Pack Type/Size NA Date NA
- Depth to Top NA
- Depth to Bottom
- Material
- Method of Installation
- Gradation

I. Screen Date 2/21/08
- Depth to Top 450-460'
- Depth to Bottom
- Manufacturer
- Material PVC
- Slot .01"

J. Bottom Cap
- Material PVC
- Length 1"
- Driller Tony

Boring Depth 575'TD 455' ream'

Additional Information

Method of Drilling Date: 6/2/07
- ☐ Cabel Tool
- ☒ Direct Rotary
- ☐ Bucket Auger
- ☐ Flight Auger
- ☐ Dug
- ☐ Hollow Rod
- ☐ Air Rotary
- ☐ Reverse Rotary
- ☐ Jetted
- ☐ Driven
- ☐ Other mud rotary

Use
- ☐ Domestic
- ☐ Industrial
- ☐ Municipal
- ☐ Test Well
- ☒ Monitoring
- ☐ Public Supply
- ☐ Irrigation
- ☐ Commercial
- ☐ Heating or Cooling
- ☐ Other

One well volume (V) = gallons

Initial Development Water
- Water Level (TIC)
- Well Depth
- Color
- Odor
- Clarity
- Developed By
- Date
- Well Development Date
- Description of Development Technique

Pump
- Date Installed
- Type
- Manufacturer
- Model No.
- H.P.
- Volts
- Capacity
- Depth of Pump Intake Setting
- No. of Stages
- ☐ Oil ☐ Water Lubrication
- Power Source
- Material of drop pipe
- Bowls
- Shafting
- Impellors
- Bowl Diameter
- Column Pipe Diameter
- Length
- Modification

Geophysical Logs Run Gamma, Resistivity, SP, ran 6/2/07

******Mechanical Integrity Test******

PSI Increments		Calibration Date of Gage	
PSI Full Scale			
Test Run By	Stan Davis, Len Eakin	Date Test Run	2/20/08
Time Beginning of Test	1100	Time End of Test	1200
Initial Pressure	40.0PSIG	Initial Fluid Level	5.0 inches
Final Pressure	40.0PSIG	Final Fluid Level	5.0inches

Water Quality
- Sample taken? ☐ Yes ☐ No
- Where analyzed?

Date well completed 2/21/08

WELL DEVELOPMENT RECORD – PARAMETER MEASUREMENTS

Well No.	Time	Total Volume Withdrawal		pH	Conductivity (ms/cm)	Temp (°C)	Turbidity (NTU)	Comments
		Gallons	Borehole Volume					
11-2	1300						appears cl.	2/21/08 well developed
	1330							water cleared up in approx. 10 minutes
								approx. 25-30 gpm while pumping
								175psi kickoff, 90psi sustained
								we lifted well for 10 minutes before pushing screen to make sure that the formation was not blocked off by cement. appeared to be making good water, so we pushed screened then lifted for another 30 minutes.

POWERTECH WELL AND PUMP DATA

Location of Well Dewey, SD	Drilling Contractor Davis Drilling	Driller Tony	Well Name DB08-11-17
County Fall River	Type of Rig Speed Star 1500	Drilling Fluid Mud	Well Depth 255'
LAT 4811660N	LONG 583440E	Elevation ?'	Datum point from which all measurements are taken

Screened Monitoring Well Completion Detail

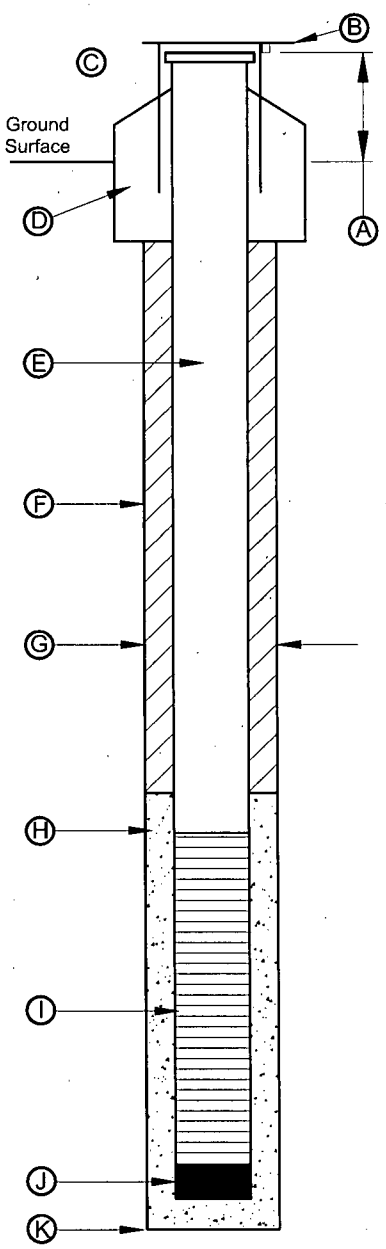

Screened Well No.

A. Stick-up Length 2.0'
B. Key No. NA
C. Protective Casing
- Diameter NA
- Material NA
- Length NA
- Depth to Bottom NA

D. Surface Completion
- Diameter NA
- Depth NA
- Material NA

E. Well Casing Data
- Diameter 6" ID
- Material PVC
- Length 247'
- Weight SDR17
- Depth to Bottom 245'

F. Grout Cement Date 03/26/08
- Depth to Top 0'
- Depth to Bottom 247'
- Material Type V "LA" Cement
- Density 15.2 lb/gal
- Volume 10.05 bbls
- % Excess 10
- Method of Installation Displacement
- Depth to Cement in Casing ?'
- Return Constant ☒ Yes ☐ No
- Volume of Grout Return 2.5 bbls

G. Borehole Diameter
- Drilling Dates 8.75" 03/26/08

H. Pack Type/Size NA Date NA
- Depth to Top NA
- Depth to Bottom
- Material
- Method of Installation
- Gradation

I. Screen Date 04/01/08
- Depth to Top 245-255'
- Depth to Bottom
- Manufacturer
- Material PVC
- Slot .01"

J. Bottom Cap
- Material PVC
- Length 1"
- Driller Tommy

Boring Depth 257'

Additional Information

Method of Drilling — Date: 03/25/08
- ☐ Cabel Tool
- ☐ Hollow Rod
- ☐ Direct Rotary
- ☐ Air Rotary
- ☐ Bucket Auger
- ☐ Reverse Rotary
- ☐ Flight Auger
- ☐ Jetted
- ☐ Dug
- ☐ Driven
- ☒ Other Mud Rotary

Use
- ☐ Domestic
- ☐ Public Supply
- ☐ Industrial
- ☐ Irrigation
- ☐ Municipal
- ☐ Commercial
- ☐ Test Well
- ☐ Heating or Cooling
- ☒ Monitoring
- ☐ Other

One well volume (V) = gallons

Initial Development Water
- Water Level (TIC) 38.08 ft below ground surface
- Well Depth
- Color
- Odor
- Clarity
- Developed By
- Date
- Well Development Date
- Description of Development Technique

Pump
- Date Installed
- Type
- Manufacturer
- Model No.
- H.P.
- Volts
- Capacity
- Depth of Pump Intake Setting
- No. of Stages
- ☐ Oil ☐ Water Lubrication
- Power Source
- Material of drop pipe
- Bowls
- Shafting
- Impellors
- Bowl Diameter
- Column Pipe Diameter
- Length
- Modification

Geophysical Logs Run Gamma, Resistivity, SP

******Mechanical Integrity Test******

PSI Increments		Calibration Date of Gage	
PSI Full Scale			
Test Run By	Stan Davis, Dan Tschopp	Date Test Run	04/01/08
Time Beginning of Test	0830	Time End of Test	0930
Initial Pressure	35.0 PSIG	Initial Fluid Level	4 inches
Final Pressure	35.0 PSIG	Final Fluid Level	4inches

Water Quality
- Sample taken? ☐ Yes ☐ No
- Where analyzed?

Date well completed 04/01/08

WELL DEVELOPMENT RECORD – PARAMETER MEASUREMENTS

Well No.	Time	Total Volume Withdrawal		pH	Conductivity (ms/cm)	Temp (°C)	Turbidity (NTU)	Comments
		Gallons	Borehole Volume					
								Well developed: 04/01/08
								Water cleared up within 5 minutes
								Unload Pressure: 110psi
								Steady Lift Pressure: 10psi
								20 minute Recovery Pressure: 15psi
								Output: Approximately 1.5 gpm
								Screened Interval: Fall River SS Formation

POWERTECH WELL AND PUMP DATA

Location of Well Dewey, SD	Drilling Contractor Davis Drilling	Driller Tony	Well Name DB08-11-18
County Fall River	Type of Rig Speed Star 1500	Drilling Fluid Mud	Well Depth 631'
LAT 583471N	LONG 4811660E	Elevation 3791'	Datum point from which all measurements are taken

Screened Monitoring Well Completion Detail

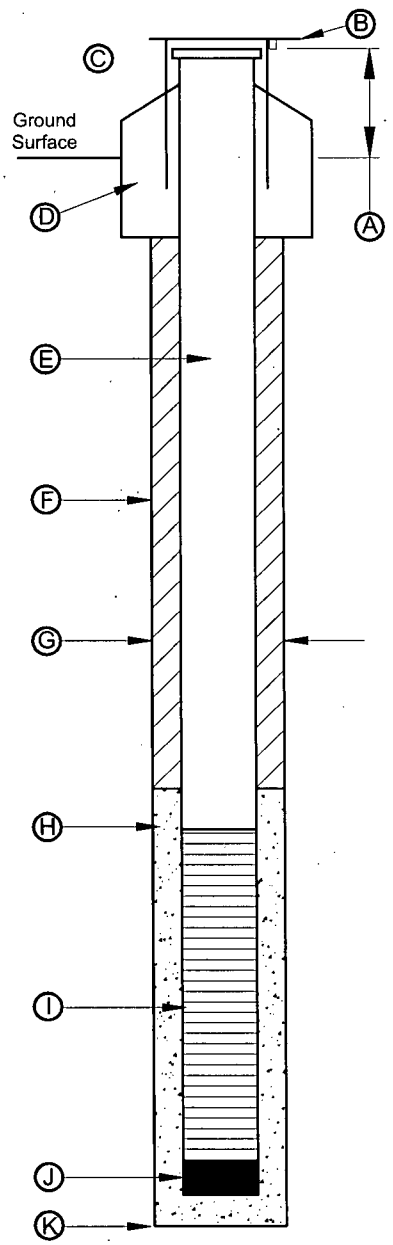

Screened Well No.

A. Stick-up Length 2.0'
B. Key No. NA
C. Protective Casing
- Diameter NA
- Material NA
- Length NA
- Depth to Bottom NA

D. Surface Completion
- Diameter NA
- Depth NA
- Material NA

E. Well Casing Data
- Diameter 6" ID
- Material Steel
- Length 623'
- Weight Schedule 40
- Depth to Bottom 621'

F. Grout Cement Date 04/02/08
- Depth to Top 0'
- Depth to Bottom 623'
- Material Type V "LA" Cement
- Density 15.15 lb/gal
- Volume 23.14 bbls
- % Excess 10
- Method of Installation Displacement
- Depth to Cement in Casing 490'
- Return Constant ☒ Yes ☐ No
- Volume of Grout Return 1 bbls

G. Borehole Diameter
- Drilling Dates 8.75" 03/31/08

H. Pack Type/Size NA Date NA
- Depth to Top NA
- Depth to Bottom
- Material
- Method of Installation
- Gradation

I. Screen Date 04/15/08
- Depth to Top 621 to 631'
- Depth to Bottom
- Manufacturer
- Material PVC
- Slot .01"

J. Bottom Cap
- Material PVC
- Length 1"
- Driller Tommy

Boring Depth 633'

Additional Information

Method of Drilling Date: 04/01/08
- ☐ Cabel Tool
- ☐ Hollow Rod
- ☐ Direct Rotary
- ☐ Air Rotary
- ☐ Bucket Auger
- ☐ Reverse Rotary
- ☐ Flight Auger
- ☐ Jetted
- ☐ Dug
- ☐ Driven
- ☒ Other Mud Rotary

Use
- ☐ Domestic
- ☐ Public Supply
- ☐ Industrial
- ☐ Irrigation
- ☐ Municipal
- ☐ Commercial
- ☐ Test Well
- ☐ Heating or Cooling
- ☒ Monitoring
- ☐ Other

One well volume (V) = gallons

Initial Development Water
- Water Level (TIC)
- Well Depth
- Color
- Odor
- Clarity
- Developed By
- Date
- Well Development Date
- Description of Development Technique

Pump
- Date Installed
- Type
- Manufacturer
- Model No.
- H.P.
- Volts
- Capacity
- Depth of Pump Intake Setting
- No. of Stages
- ☐ Oil ☐ Water Lubrication
- Power Source
- Material of drop pipe
- Bowls
- Shafting
- Impellors
- Bowl Diameter
- Column Pipe Diameter
- Length
- Modification

Geophysical Logs Run Gamma, Resistivity, SP

******Mechanical Integrity Test******

PSI Increments	5	Calibration Date of Gage	
PSI Full Scale			
Test Run By	Stan Davis, Dan Tschopp	Date Test Run	04/14/08
Time Beginning of Test	1200	Time End of Test	1300
Initial Pressure	35.0 PSIG	Initial Fluid Level	4 inches
Final Pressure	35.0 PSIG	Final Fluid Level	4inches

Water Quality
- Sample taken? ☐ Yes ☐ No
- Where analyzed?

Date well completed 04/15/08

WELL DEVELOPMENT RECORD – PARAMETER MEASUREMENTS

Well No.	Time	Total Volume Withdrawal		pH	Conductivity (ms/cm)	Temp (°C)	Turbidity (NTU)	Comments
		Gallons	Borehole Volume					
								Well developed: 04/15/08
								Water cleared up within 5 minutes
								Unload Pressure: 245psi
								Steady Lift Pressure: 30psi
								Output: Approximately <2 gpm
								Screened Interval: Unkpapa SS formation
								20 min recovery lift: 50 psi

POWERTECH WELL AND PUMP DATA

Location of Well Dewey, SD	Drilling Contractor Davis Drilling	Driller Tony	Well Name DB08-11-19
County Fall River	Type of Rig Speed Star 1500	Drilling Fluid Mud	Well Depth 335'
LAT 583453N	LONG 4811673E	Elevation 4029'	Datum point from which all measurements are taken

Screened Monitoring Well Completion Detail

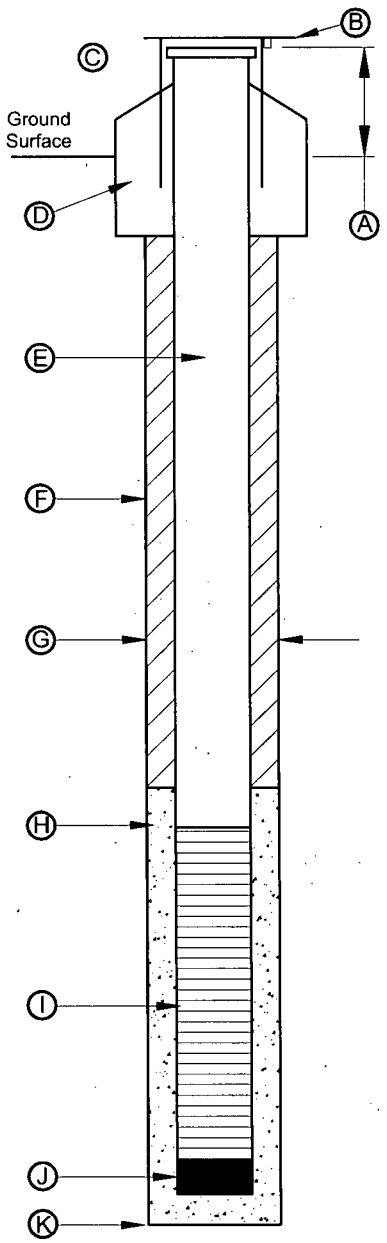

Screened Well No.

A. Stick-up Length 2.0'
B. Key No. NA
C. Protective Casing
- Diameter NA
- Material NA
- Length NA
- Depth to Bottom NA

D. Surface Completion
- Diameter NA
- Depth NA
- Material NA

E. Well Casing Data
- Diameter 6" ID
- Material PVC
- Length 327'
- Weight SDR17
- Depth to Bottom 325'

F. Grout Cement Date 04/4/08
- Depth to Top 0'
- Depth to Bottom 327'
- Material Type V "LA" Cement
- Density 15.65 lb/gal
- Volume 12.77 bbls
- % Excess 10
- Method of Installation Displacement
- Depth to Cement in Casing 223'
- Return Constant ☒ Yes ☐ No
- Volume of Grout Return 2 bbls

G. Borehole Diameter
- Drilling Dates 8.75" 04/3/08

H. Pack Type/Size NA Date NA
- Depth to Top NA
- Depth to Bottom
- Material
- Method of Installation
- Gradation

I. Screen Date 04/16/08
- Depth to Top 325 to335'
- Depth to Bottom
- Manufacturer
- Material PVC
- Slot .01"

J. Bottom Cap
- Material PVC
- Length 1"
- Driller Tommy

Boring Depth 337'

Additional Information

Method of Drilling Date: 04/3/08
- ☐ Cabel Tool
- ☐ Hollow Rod
- ☐ Direct Rotary
- ☐ Air Rotary
- ☐ Bucket Auger
- ☐ Reverse Rotary
- ☐ Flight Auger
- ☐ Jetted
- ☐ Dug
- ☐ Driven
- ☒ Other Mud Rotary

Use
- ☐ Domestic
- ☐ Public Supply
- ☐ Industrial
- ☐ Irrigation
- ☐ Municipal
- ☐ Commercial
- ☐ Test Well
- ☐ Heating or Cooling
- ☒ Monitoring
- ☐ Other

One well volume (V) = gallons

Initial Development Water
- Water Level (TIC)
- Well Depth
- Color
- Odor
- Clarity
- Developed By
- Date
- Well Development Date
- Description of Development Technique

Pump
- Date Installed
- Type
- Manufacturer
- Model No.
- H.P.
- Volts
- Capacity
- Depth of Pump Intake Setting
- No. of Stages
- ☐ Oil ☐ Water Lubrication
- Power Source
- Material of drop pipe
- Bowls
- Shafting
- Impellors
- Bowl Diameter
- Column Pipe Diameter
- Length
- Modification

Geophysical Logs Run Gamma, Resistivity, SP

******Mechanical Integrity Test******

PSI Increments	5	Calibration Date of Gage	
PSI Full Scale			
Test Run By	Stan Davis, Dan Tschopp	Date Test Run	04/15/08
Time Beginning of Test	0830	Time End of Test	0930
Initial Pressure	35.0 PSIG	Initial Fluid Level	4 inches
Final Pressure	35.0 PSIG	Final Fluid Level	4inches

Water Quality
- Sample taken? ☐ Yes ☐ No
- Where analyzed?

Date well completed 04/16/08

WELL DEVELOPMENT RECORD – PARAMETER MEASUREMENTS

Well No.	Time	Total Volume Withdrawal		pH	Conductivity (ms/cm)	Temp (°C)	Turbidity (NTU)	Comments
		Gallons	Borehole Volume					
								Well developed: 04/16/08
								Water cleared up within 5 minutes
								Unload Pressure: 150 psi
								Steady Lift Pressure: 45 psi
								Output: Approximately 30 gpm
								Screened Interval: Lakota SS formation

Knight Piésold
CONSULTING

Appendix C-2
Time and Water Level Data Values Used in Pumping Test Analysis: Burdock Test, Drawdown Data

Table C.2-1:
Time and Water Level Data Values Used in Pumping Test Analysis: Burdock Test, Drawdown Data

11-2		11-14C		11-15		11-19*		11-11C	
Time (days)	Drawdown (ft)	Time (days)	Drawdown (ft)	Time (days)	Drawdown (ft)	Time (days)	Drawdown (ft)	Time (days)	Drawdown (ft)
0.000012	-0.024157	0.000012	-0.009060	0.000012	0.000000	0.000012	0.047297	0.000025	1.516154
0.000023	-0.047234	0.000023	0.018633	0.000023	-0.023077	0.000058	0.072682	0.000035	1.781538
0.000035	-0.038003	0.000035	0.002479	0.000035	-0.025385	0.000069	0.042682	0.000046	2.453077
0.000046	0.081997	0.000046	0.002479	0.000046	0.030000	0.000093	0.010374	0.000058	2.967692
0.000058	0.033535	0.000058	-0.078290	0.000058	-0.013846	0.000116	0.042682	0.000069	3.648462
0.000069	0.021997	0.000069	-0.015983	0.000069	0.009231	0.000162	0.031143	0.000083	4.463077
0.000081	0.070458	0.000081	0.060171	0.000081	-0.053077	0.000174	0.054220	0.000093	5.010000
0.000093	-0.028772	0.000093	0.007094	0.000093	-0.009231	0.000185	0.031143	0.000104	5.016923
0.000104	-0.051849	0.000104	0.011710	0.000104	-0.018462	0.000197	0.010374	0.000116	5.480769
0.000116	-0.040311	0.000116	-0.027521	0.000116	0.011538	0.000208	0.047297	0.000127	5.746154
0.000127	-0.061080	0.000127	-0.015983	0.000127	-0.032308	0.000220	0.031143	0.000141	5.981538
0.000139	-0.021849	0.000139	-0.004444	0.000139	0.129231	0.000255	0.017297	0.000150	6.256154
0.000150	0.072766	0.000150	0.016325	0.000150	0.025385	0.000289	0.010374	0.000162	6.306923
0.000162	-0.058772	0.000162	0.011710	0.000162	0.009231	0.000370	0.042682	0.000174	6.773077
0.000174	-0.040311	0.000174	0.002479	0.000174	-0.011538	0.000498	0.051912	0.000185	6.969231
0.000185	-0.044926	0.000185	-0.013675	0.000185	0.002308	0.000521	0.003451	0.000199	7.061539
0.000197	-0.031080	0.000197	-0.022906	0.000197	0.018462	0.000833	0.056528	0.000208	7.377692
0.000208	-0.021849	0.000208	-0.032137	0.000208	0.101538	0.001111	0.051912	0.000220	7.467692
0.000220	-0.061080	0.000220	-0.034444	0.000220	-0.006923	0.001319	0.012682	0.000231	7.873846
0.000231	-0.012619	0.000231	0.023248	0.000231	0.013846	0.002639	0.054220	0.000243	8.206154
0.000243	-0.008003	0.000243	0.016325	0.000243	-0.027692	0.004167	0.001143	0.000257	9.445385
0.000255	0.045074	0.000255	-0.002137	0.000255	-0.020769	0.005903	0.033451	0.000266	9.078462
0.000266	-0.019542	0.000266	0.030171	0.000266	-0.004615	0.007292	0.070374	0.000278	9.729231
0.000278	0.040458	0.000278	0.009402	0.000278	0.018462	0.008333	0.008066	0.000289	9.835384
0.000289	0.001228	0.000289	-0.020598	0.000289	0.023077	0.009028	0.024220	0.000301	10.308461
0.000301	0.063535	0.000301	-0.039060	0.000301	-0.009231	0.020833	0.003451	0.000312	10.712308
0.000312	0.045074	0.000312	-0.006752	0.000312	-0.018462	0.025000	0.019605	0.000324	11.180769
0.000324	-0.065696	0.000324	0.000171	0.000324	0.006923	0.072917	0.077297	0.000336	11.457692
0.000336	0.081997	0.000336	0.004786	0.000336	-0.027692	0.079896	0.005759	0.000347	11.833846
0.000347	0.070458	0.000347	0.032479	0.000347	-0.004615	0.083368	0.003451	0.000359	12.263077
0.000359	0.091228	0.000359	-0.009060	0.000359	0.011538	0.090313	0.028836	0.000370	11.210770
0.000370	0.058920	0.000370	-0.029829	0.000370	-0.002308	0.097257	0.038066	0.000382	11.289230
0.000382	0.056612	0.000382	0.018633	0.000382	-0.020769	0.104201	0.081912	0.000394	12.422308
0.000394	0.077381	0.000394	-0.006752	0.000394	0.013846	0.111146	0.088836	0.000405	12.669230
0.000417	-0.070311	0.000405	0.002479	0.000417	0.011538	0.118206	0.128066	0.000417	12.837692
0.000451	-0.061080	0.000417	0.004786	0.000451	-0.011538	0.125035	0.155759	0.000428	12.692307
0.000463	-0.008003	0.000451	0.002479	0.000463	0.090000	0.131979	0.155759	0.000451	13.112308
0.000486	-0.019542	0.000463	0.009402	0.000486	-0.018462	0.138924	0.160374	0.000463	13.324615
0.000498	0.072766	0.000486	-0.027521	0.000498	0.000000	0.149340	0.174220	0.000486	13.633846
0.000521	0.008151	0.000498	-0.043675	0.000521	0.000000	0.159757	0.204220	0.000498	13.970769
0.000532	0.061228	0.000521	-0.039060	0.000532	0.006923	0.170174	0.208836	0.000521	14.370000

Table C.2-1:
Time and Water Level Data Values Used in Pumping Test Analysis: Burdock Test, Drawdown Data

11-2		11-14C		11-15		11-19*		11-11C	
Time (days)	Drawdown (ft)	Time (days)	Drawdown (ft)	Time (days)	Drawdown (ft)	Time (days)	Drawdown (ft)	Time (days)	Drawdown (ft)
0.000556	0.079689	0.000532	-0.006752	0.000556	0.009231	0.180590	0.238836	0.000532	15.939231
0.000590	0.035843	0.000556	0.014017	0.000590	0.013846	0.194479	0.275759	0.000556	15.150000
0.000625	-0.047234	0.000590	0.011710	0.000625	0.000000	0.208368	0.326528	0.000590	16.077692
0.000660	0.045074	0.000625	0.050940	0.000660	-0.025385	0.222257	0.342682	0.000625	17.023846
0.000694	-0.049542	0.000660	0.055556	0.000694	-0.009231	0.236146	0.368066	0.000660	17.820000
0.000729	0.088920	0.000694	-0.009060	0.000729	0.016154	0.250035	0.398066	0.000694	18.664616
0.000764	-0.040311	0.000729	-0.004444	0.000764	-0.027692	0.263924	0.478836	0.000729	19.426153
0.000799	0.091228	0.000764	0.018633	0.000799	0.126923	0.277812	0.485759	0.000764	20.319231
0.000833	-0.047234	0.000799	0.014017	0.000833	0.122308	0.295174	0.548066	0.000799	20.972307
0.000903	0.049689	0.000833	0.041710	0.000903	0.018462	0.312535	0.548066	0.000833	21.867693
0.000972	-0.012619	0.000903	-0.004444	0.000972	0.053077	0.329896	0.617297	0.000903	23.321539
0.001042	-0.035696	0.000972	-0.015983	0.001042	0.002308	0.347257	0.642682	0.000972	24.676153
0.001111	-0.038003	0.001042	-0.004444	0.001111	-0.020769	0.370405	0.753451	0.001042	25.989231
0.001181	-0.044926	0.001111	0.004786	0.001181	0.000000	0.393553	0.801912	0.001111	27.496155
0.001250	-0.038003	0.001181	0.011710	0.001250	0.032308	0.416701	0.799605	0.001181	28.686924
0.001319	-0.077234	0.001250	0.023248	0.001319	-0.041538	0.439965	0.824989	0.001250	30.036922
0.001389	-0.019542	0.001319	0.018633	0.001389	-0.032308	0.462998	0.912682	0.001319	31.310770
0.001493	-0.058772	0.001389	0.034786	0.001493	0.002308	0.486146	0.947297	0.001389	32.589230
0.001597	-0.021849	0.001493	-0.002137	0.001597	-0.046154	0.520868	1.004989	0.001493	34.361538
0.001701	-0.061080	0.001597	0.027863	0.001701	0.023077	0.555590	1.060374	0.001597	36.092308
0.001806	-0.012619	0.001701	0.050940	0.001806	0.013846	0.590312	1.099605	0.001701	37.631538
0.001944	-0.044926	0.001806	0.037094	0.001944	0.006923	0.625035	1.233451	0.001806	39.083076
0.002083	-0.019542	0.001944	0.018633	0.002083	-0.020769	0.659757	1.270374	0.001944	41.026154
0.002222	-0.077234	0.002083	0.044017	0.002222	0.018462	0.694479	1.332682	0.002083	42.489231
0.002361	-0.001080	0.002222	0.037094	0.002361	-0.002308	0.729549	1.408836	0.002222	44.259232
0.002500	-0.044926	0.002361	0.023248	0.002500	0.006923	0.763924	1.466528	0.002361	45.662308
0.002639	-0.056465	0.002500	0.101710	0.002639	-0.046154	0.798646	1.535759	0.002500	47.166924
0.002778	-0.038003	0.002639	0.108633	0.002778	-0.006923	0.833368	1.604989	0.002639	48.606922
0.002951	-0.038003	0.002778	0.057863	0.002951	-0.016154	0.902928	1.736528	0.002778	49.860001
0.003125	-0.019542	0.002951	0.129402	0.003125	-0.023077	0.972951	1.794220	0.002951	51.387692
0.003299	-0.068003	0.003125	0.090171	0.003299	-0.011538	1.041701	1.907297	0.003125	52.799999
0.003472	-0.084157	0.003299	0.092479	0.003472	0.041538	1.111146	1.960374	0.003299	54.080769
0.003704	-0.040311	0.003472	0.108633	0.003704	0.027692	1.180590	2.094220	0.003472	55.310768
0.003935	-0.051849	0.003704	0.129402	0.003935	-0.011538	1.250035	2.101143	0.003704	56.683846
0.004167	-0.038003	0.003935	0.150171	0.004167	0.016154	1.319479	2.193451	0.003935	57.895386
0.004398	-0.063388	0.004167	0.164017	0.004398	0.013846	1.388924	2.311143	0.004167	59.180771
0.004630	-0.058772	0.004398	0.196325	0.004630	0.006923	1.493090	2.396528	0.004398	60.244614
0.004861	-0.021849	0.004630	0.228633	0.004861	-0.053077	1.597257	2.504989	0.004630	61.167694
0.005208	-0.035696	0.004861	0.247094	0.005208	-0.023077	1.701424	2.620374	0.004861	61.975384
0.005556	-0.086465	0.005208	0.295556	0.005556	-0.036923	1.805590	2.756528	0.005208	63.325386
0.005903	-0.026465	0.005556	0.330171	0.005903	-0.011538	1.944479	2.848835	0.005556	64.400772

Table C.2-1:
Time and Water Level Data Values Used in Pumping Test Analysis: Burdock Test, Drawdown Data

11-2		11-14C		11-15		11-19*		11-11C	
Time (days)	Drawdown (ft)	Time (days)	Drawdown (ft)	Time (days)	Drawdown (ft)	Time (days)	Drawdown (ft)	Time (days)	Drawdown (ft)
0.006250	-0.028772	0.005903	0.374017	0.006250	0.025385	2.083368	2.890374	0.005903	65.418465
0.006597	-0.058772	0.006250	0.429402	0.006597	0.041538	2.222257	2.915759	0.006250	66.311539
0.006944	-0.063388	0.006597	0.498633	0.006944	-0.016154	2.361146	2.984989	0.006597	67.100769
0.007292	-0.051849	0.006944	0.560940	0.007292	0.011538	2.500035	3.086528	0.006944	67.728462
0.007639	-0.070311	0.007292	0.620940	0.007639	-0.023077	2.638924	3.148836	0.007292	68.552307
0.007986	-0.086465	0.007639	0.653248	0.007986	0.000000	2.777813	3.222682	0.007639	69.124619
0.008333	-0.088772	0.007986	0.678633	0.008333	0.009231	2.951423	3.358835	0.007986	69.708458
0.009028	-0.024157	0.008333	0.745556	0.009028	-0.002308	2.999988	3.358835	0.008333	70.416924
0.009722	-0.021849	0.009028	0.881710	0.009722	-0.009231			0.009028	71.642311
0.010417	-0.033388	0.009722	0.950940	0.010417	0.002308			0.009722	72.440773
0.011111	0.075074	0.010417	1.103248	0.011111	-0.016154			0.010417	73.167694
0.011806	-0.065696	0.011111	1.193248	0.011806	-0.004615			0.011111	73.636154
0.012500	-0.044926	0.011806	1.287863	0.012500	0.025385			0.011806	74.150772
0.013194	-0.056465	0.012500	1.424017	0.013194	0.011538			0.012500	74.545387
0.013889	-0.031080	0.013194	1.504786	0.013889	-0.046154			0.013194	74.815384
0.014931	0.065843	0.013889	1.703248	0.014931	-0.002308			0.013889	74.995384
0.015972	-0.047234	0.014931	1.770171	0.015972	-0.023077			0.014931	75.251541
0.017014	-0.084157	0.015972	1.934017	0.017014	-0.011538			0.015972	75.565384
0.018056	-0.061080	0.017014	2.047094	0.018056	0.000000			0.017014	75.904617
0.019444	0.008151	0.018056	2.213248	0.019444	0.011538			0.018056	76.105385
0.020833	-0.061080	0.019444	2.377094	0.020833	0.057692			0.019444	76.299232
0.022222	-0.049542	0.020833	2.550171	0.022222	-0.018462			0.020833	76.631538
0.023611	-0.093388	0.022222	2.727863	0.023611	0.004615			0.022222	76.746925
0.025000	-0.042619	0.023611	2.861710	0.025000	0.025385			0.023611	76.998459
0.026389	-0.077234	0.025000	3.018633	0.026389	0.020769			0.024990	77.176155
0.027778	-0.065696	0.026389	3.168633	0.027778	0.000000			0.026389	77.411537
0.029514	-0.068003	0.027778	3.297863	0.029514	-0.034615			0.027778	77.464615
0.031250	-0.051849	0.029514	3.415556	0.031250	-0.009231			0.029514	77.723076
0.032986	-0.040311	0.031250	3.563248	0.032986	0.000000			0.031250	77.755386
0.034722	-0.079542	0.032986	3.766325	0.034722	-0.004615			0.032986	78.025383
0.037037	-0.074926	0.034722	3.872479	0.037037	-0.025385			0.034722	78.302307
0.039352	-0.077234	0.037037	4.091710	0.039352	0.030000			0.037037	78.260773
0.041667	-0.079542	0.039352	4.195556	0.041667	0.090000			0.039352	78.567696
0.043981	0.049689	0.041667	4.417094	0.043981	-0.027692			0.041667	78.678459
0.046296	0.049689	0.043981	4.640940	0.046296	0.057692			0.043981	78.959999
0.048611	-0.047234	0.046296	4.664017	0.048611	0.009231			0.046296	79.008461
0.052083	0.084304	0.048611	4.827863	0.052083	0.011538			0.048611	79.151535
0.055556	0.051997	0.052083	5.035556	0.055556	-0.009231			0.052083	79.290001
0.059028	0.049689	0.055556	5.222479	0.059028	0.000000			0.055556	79.437691
0.062500	-0.008003	0.059028	5.358633	0.062500	0.018462			0.059028	79.666153
0.065972	0.028920	0.062500	5.568633	0.065972	0.034615			0.062500	79.823074

Table C.2-1:
Time and Water Level Data Values Used in Pumping Test Analysis: Burdock Test, Drawdown Data

11-2		11-14C		11-15		11-19*		11-11C	
Time (days)	Drawdown (ft)	Time (days)	Drawdown (ft)	Time (days)	Drawdown (ft)	Time (days)	Drawdown (ft)	Time (days)	Drawdown (ft)
0.069444	-0.012619	0.065972	5.750940	0.069444	0.036923			0.065972	80.005386
0.072917	0.061228	0.069444	5.854786	0.072917	0.027692			0.069444	80.173843
0.076470	-0.054157	0.072917	6.044017	0.076389	0.106154			0.072917	80.266151
0.079942	-0.003388	0.076389	6.161710	0.079861	0.060000			0.076389	80.420769
0.083414	-0.047234	0.079942	6.325556	0.083449	0.057692			0.079861	80.533844
0.090359	-0.038003	0.083414	6.470940	0.090394	0.101538			0.083368	80.702309
0.097303	-0.005696	0.090359	6.738633	0.097338	0.152308			0.090313	80.923843
0.104248	0.035843	0.097303	6.953248	0.104282	0.170769			0.097257	81.223846
0.111192	0.003535	0.104248	7.172479	0.111227	0.163846			0.104201	81.373848
0.118137	0.021997	0.111192	7.414786	0.118171	0.233077			0.111146	83.363075
0.125081	-0.001080	0.118137	7.659402	0.125116	0.267692			0.118206	83.801537
0.132025	0.026612	0.125081	7.855556	0.132060	0.306923			0.125035	84.023079
0.138970	0.045074	0.132025	8.058633	0.139005	0.346154			0.131979	84.295387
0.149387	0.047381	0.138970	8.254786	0.149421	0.433846			0.138924	84.408463
0.159803	0.021997	0.149387	8.520171	0.159838	0.450000			0.149340	84.701538
0.170220	0.045074	0.159803	8.787864	0.170255	0.567692			0.159757	84.886154
0.180637	0.072766	0.170220	9.032478	0.180671	0.634615			0.170174	85.036156
0.194525	0.102766	0.180637	9.251710	0.194560	0.745385			0.180590	85.093849
0.208414	0.125843	0.194525	9.535556	0.208449	0.860769			0.194481	85.407692
0.222303	0.169689	0.208414	9.777864	0.222338	0.960000			0.208368	85.668465
0.236192	0.167381	0.222303	10.004017	0.236227	1.112308			0.222257	85.698463
0.250081	0.190458	0.236192	10.220941	0.250116	1.174615			0.236146	85.924614
0.263970	0.271228	0.250081	10.463248	0.264005	1.359231			0.250035	86.176155
0.277859	0.268920	0.263970	10.629402	0.277894	1.467692			0.263924	86.381538
0.295220	0.301228	0.277859	10.839402	0.295255	1.615385			0.277812	86.476151
0.312581	0.342766	0.295220	11.037864	0.312616	1.804615			0.295174	86.568459
0.329942	0.368151	0.312581	11.213248	0.329977	1.929231			0.312535	86.683846
0.347303	0.411997	0.329942	11.411710	0.347338	2.118462			0.329896	86.801537
0.370451	0.499689	0.347303	11.594017	0.370486	2.303077			0.347257	87.147690
0.393600	0.548151	0.370451	11.884787	0.393634	2.524615			0.370405	87.223846
0.416748	0.561997	0.393600	12.039402	0.416782	2.764615			0.393553	87.353073
0.440012	0.619689	0.416748	12.240171	0.440046	2.933077			0.416701	87.613846
0.463044	0.688920	0.440012	12.397094	0.463079	3.168462			0.439965	87.560768
0.486192	0.762766	0.463044	12.602479	0.486227	3.297692			0.462998	87.625381
0.520914	0.806612	0.486192	12.685555	0.520949	3.620769			0.486146	87.985382
0.555637	0.820458	0.520914	12.969402	0.555671	3.913846			0.520868	88.033844
0.590359	0.894304	0.555637	13.144787	0.590394	4.144615			0.555590	88.010773
0.625081	0.995843	0.590359	13.317863	0.625116	4.352308			0.590312	88.456154
0.659803	1.044304	0.625081	13.433248	0.659838	4.668461			0.625035	88.396156
0.694525	1.097381	0.659803	13.574018	0.694560	4.846154			0.659757	88.737694
0.729595	1.136612	0.694525	13.707864	0.729630	5.088461			0.694479	88.555382

Table C.2-1:
Time and Water Level Data Values Used in Pumping Test Analysis: Burdock Test, Drawdown Data

11-2		11-14C		11-15		11-19*		11-11C	
Time (days)	Drawdown (ft)	Time (days)	Drawdown (ft)	Time (days)	Drawdown (ft)	Time (days)	Drawdown (ft)	Time (days)	Drawdown (ft)
0.763970	1.224304	0.729595	13.867094	0.764005	5.245385			0.729549	88.721535
0.798692	1.295843	0.763970	13.973248	0.798727	5.476154			0.763924	88.975388
0.833414	1.399689	0.798692	14.224787	0.833449	5.651538			0.798646	88.666153
0.902859	1.487381	0.833414	14.324018	0.902893	6.032308			0.833368	88.786156
0.972998	1.598151	0.902859	14.557095	0.973032	6.346154			0.902928	88.931541
1.041748	1.711228	0.972998	14.723248	1.041782	6.643846			0.972951	89.081535
1.111192	1.757381	1.041748	14.868632	1.111227	6.946154			1.041701	89.093079
1.180637	1.840458	1.111192	15.067094	1.180671	7.181539			1.111146	89.376923
1.250081	1.900458	1.180637	15.187094	1.250116	7.375385			1.180590	89.307693
1.319525	2.008920	1.250081	15.297863	1.319560	7.629231			1.250035	89.554619
1.388970	2.117381	1.319525	15.378633	1.389005	7.820769			1.319479	89.826920
1.493137	2.207381	1.388970	15.614017	1.493171	8.093077			1.388924	90.085388
1.597303	2.299689	1.493137	15.789402	1.597338	8.406923			1.493090	89.976921
1.701470	2.440458	1.597303	15.893248	1.701505	8.614615			1.597257	90.182304
1.805637	2.486612	1.701470	16.008633	1.805671	8.824615			1.701424	90.168465
1.944525	2.585843	1.805637	16.149403	1.944560	9.115385			1.805590	90.166153
2.083414	2.634305	1.944525	16.310940	2.083449	9.323077			1.944479	90.678459
2.222303	2.668920	2.083414	16.405556	2.222338	9.459230			2.083368	90.639229
2.361192	2.724304	2.222303	16.516325	2.361227	9.602307			2.222257	90.736153
2.500081	2.844305	2.361192	16.587864	2.500116	9.766154			2.361146	90.819229
2.638970	2.837381	2.500081	16.634018	2.639005	9.953077			2.500035	91.047691
2.777859	2.966612	2.638970	16.770170	2.777894	10.040770			2.638924	91.165382
2.951470	3.084305	2.777859	16.874018	2.951505	10.250770			2.777813	91.137695
2.999988	3.063535	2.951470	17.010172	2.999988	10.373077			2.951423	91.176926
		2.999988	17.014786					2.999988	91.066154

General Methodology: PSI, temperature, and time readings from Win-Situ™ digital data log were exported to Excel ".csv" file.
Drawdown was calculated as PSI at time after pumping minus average PSI before pumping; therefore, at small or zero changes in PSI negative drawdowns may be calculated.
A FORTRAN program was written to read the ".csv" file and produce a second file by extracting the records at a frequency of 40 per log-time cycle (in minutes) in order achieve equal representation of data throughout the pumping and drawdown phases of the test.

Note: * = early time data filtered to remove calculated negative drawdown values

Knight Piésold
CONSULTING

Appendix C-3
Time and Water Level Data Values Used in Pumping Test Analysis: Burdock Test, Recovery Data

Table C.3-1:
Time and Water Level Data Values Used in Pumping Test Analysis: Burdock Test, Recovery Data

11-2 Time (days)	Drawdown (ft)	11-14C Time (days)	Drawdown (ft)	11-15 Time (days)	Drawdown (ft)	11-19 Time (days)	Drawdown (ft)	11-11C Time (days)	Drawdown (ft)
3.000035	3.052742	3.000035	17.052603	3.000035	10.293365	3.000035	3.347297	3.002651	91.335097
3.000046	3.045798	3.000046	17.017954	3.000046	10.353427	3.000046	3.370374	3.002662	89.775840
3.000058	3.094334	3.000058	17.075690	3.000058	10.328013	3.000058	3.455759	3.002674	89.062054
3.000070	3.050451	3.000070	16.999449	3.000070	10.318778	3.000070	3.448836	3.002685	88.339016
3.000081	3.089717	3.000081	17.036424	3.000081	10.309544	3.000081	3.444220	3.002697	87.676058
3.000093	3.061977	3.000093	17.006393	3.000093	10.328013	3.000093	3.444220	3.002708	87.077762
3.000104	3.075829	3.000104	17.027189	3.000104	10.445812	3.000104	3.358835	3.002720	86.327019
3.000116	3.055068	3.000116	17.013337	3.000116	10.274895	3.000116	3.351912	3.002732	85.668660
3.000127	3.078155	3.000127	16.997158	3.000127	10.291038	3.000127	3.430374	3.002743	85.077308
3.000139	3.057359	3.000139	16.980979	3.000139	10.399637	3.000139	3.437297	3.002755	84.428184
3.000151	3.066594	3.000151	17.052603	3.000151	10.307217	3.000151	3.335759	3.002766	83.869172
3.000162	3.055068	3.000162	17.020246	3.000162	10.328013	3.000162	3.400374	3.002778	83.215448
3.000174	3.071212	3.000174	17.001776	3.000174	10.267951	3.000174	3.432682	3.002789	82.612535
3.000185	3.089717	3.000185	17.013337	3.000185	10.445812	3.000185	3.393451	3.002801	82.021165
3.000197	3.048124	3.000197	17.020246	3.000197	10.323396	3.000197	3.409605	3.002813	81.385929
3.000208	3.050451	3.000208	17.004067	3.000208	10.291038	3.000208	3.432682	3.002824	80.928536
3.000220	3.098952	3.000220	17.013337	3.000220	10.300273	3.000220	3.391143	3.002836	80.267886
3.000232	3.036563	3.000232	17.027189	3.000232	10.300273	3.000232	3.448836	3.002847	79.845142
3.000243	3.075829	3.000243	16.992541	3.000243	10.330304	3.000243	3.356528	3.002859	79.119812
3.000255	3.085099	3.000255	16.990214	3.000255	10.281804	3.000255	3.488066	3.002870	78.657802
3.000266	3.087390	3.000266	17.020246	3.000266	10.399637	3.000266	3.344989	3.002882	78.015622
3.000278	3.085099	3.000278	16.974036	3.000278	10.314161	3.000278	3.326528	3.002894	77.498184
3.000289	3.029654	3.000289	17.057220	3.000289	10.314161	3.000289	3.483451	3.002905	76.918375
3.000301	3.071212	3.000301	16.990214	3.000301	10.371897	3.000301	3.425759	3.002917	76.403246
3.000313	3.071212	3.000313	17.034098	3.000313	10.328013	3.000313	3.391143	3.002928	75.733344
3.000324	3.101243	3.000324	17.015628	3.000324	10.295656	3.000324	3.400374	3.002940	75.220524
3.000336	3.071212	3.000336	17.022572	3.000336	10.297982	3.000336	3.432682	3.002951	74.786254
3.000347	3.038889	3.000347	16.969418	3.000347	10.316452	3.000347	3.451143	3.002963	74.093246
3.000359	3.096625	3.000359	17.006393	3.000359	10.334957	3.000359	3.455759	3.002974	73.559648
3.000370	3.031945	3.000370	17.020246	3.000370	10.323396	3.000370	3.437297	3.002986	73.032957
3.000382	3.082773	3.000382	16.918626	3.000382	10.274895	3.000382	3.421143	3.002998	72.704941
3.000394	3.043507	3.000394	17.022572	3.000394	10.316452	3.000394	3.425759	3.003009	71.935711
3.000405	3.085099	3.000405	16.997158	3.000405	10.286421	3.000405	3.428066	3.003021	71.480644
3.000417	3.048124	3.000417	17.008684	3.000417	10.284130	3.000417	3.384220	3.003032	70.889274

Table C.3-1:
Time and Water Level Data Values Used in Pumping Test Analysis: Burdock Test, Recovery Data

11-2 Time (days)	Drawdown (ft)	11-14C Time (days)	Drawdown (ft)	11-15 Time (days)	Drawdown (ft)	11-19 Time (days)	Drawdown (ft)	11-11C Time (days)	Drawdown (ft)
3.000428	3.096625	3.000428	17.031807	3.000428	10.302600	3.000428	3.458066	3.003044	70.441134
3.000451	3.082773	3.000451	17.029480	3.000451	10.297982	3.000451	3.432682	3.003067	69.438598
3.000486	3.034272	3.000486	17.027189	3.000486	10.318778	3.000486	3.432682	3.003102	68.024879
3.000498	3.041180	3.000498	17.041042	3.000498	10.311835	3.000498	3.414220	3.003113	67.482028
3.000509	3.038889	3.000509	17.011011	3.000509	10.286421	3.000509	3.451143	3.003125	67.024652
3.000532	3.055068	3.000532	16.992541	3.000532	10.348810	3.000532	3.441912	3.003148	66.121445
3.000544	3.034272	3.000544	17.008684	3.000544	10.281804	3.000544	3.402682	3.003160	65.712570
3.000567	3.068920	3.000567	17.057220	3.000567	10.286421	3.000567	3.414220	3.003183	64.809363
3.000590	3.094334	3.000590	17.022572	3.000590	10.261007	3.000590	3.448836	3.003206	64.010101
3.000625	3.052742	3.000625	17.008684	3.000625	10.295656	3.000625	3.356528	3.003241	62.806583
3.000660	3.087390	3.000660	17.036424	3.000660	10.293365	3.000660	3.432682	3.003276	61.730133
3.000683	3.075829	3.000683	17.022572	3.000683	10.288747	3.000683	3.476528	3.003299	60.965520
3.000718	3.055068	3.000718	17.017954	3.000718	10.425015	3.000718	3.340374	3.003333	59.974528
3.000764	3.061977	3.000764	16.990214	3.000764	10.427342	3.000764	3.354220	3.003380	58.627797
3.000799	3.048124	3.000799	17.015628	3.000799	10.316452	3.000799	3.428066	3.003415	57.664528
3.000822	3.085099	3.000822	16.999449	3.000822	10.286421	3.000822	3.448836	3.003438	57.070866
3.000857	3.041180	3.000857	16.978688	3.000857	10.323396	3.000857	3.340374	3.003472	56.197673
3.000938	3.041180	3.000938	17.029480	3.000938	10.358045	3.000938	3.448836	3.003553	54.402802
3.000995	3.050451	3.000995	16.976362	3.000995	10.277186	3.000995	3.432682	3.003611	53.229332
3.001076	3.066594	3.001076	17.038715	3.001076	10.351101	3.001076	3.354220	3.003692	51.808687
3.001134	3.055068	3.001134	17.008684	3.001134	10.304926	3.001134	3.354220	3.003751	50.990938
3.001215	3.092008	3.001215	17.038715	3.001215	10.277186	3.001215	3.349605	3.003821	50.133923
3.001285	3.038889	3.001285	17.013337	3.001285	10.346483	3.001285	3.344989	3.003900	49.177597
3.001354	3.082773	3.001354	17.013337	3.001354	10.300273	3.001354	3.328835	3.003971	48.334434
3.001423	3.094334	3.001423	16.914009	3.001423	10.323396	3.001423	3.421143	3.004039	47.567513
3.001528	3.103569	3.001528	16.987923	3.001528	10.346483	3.001528	3.354220	3.004144	46.484136
3.001620	3.061977	3.001620	16.987923	3.001620	10.385749	3.001620	3.358835	3.004236	45.405359
3.001736	3.071212	3.001736	16.967127	3.001736	10.325687	3.001736	3.384220	3.004352	44.317348
3.001840	3.075829	3.001840	16.971745	3.001840	10.293365	3.001840	3.462682	3.004457	43.307886
3.001979	3.094334	3.001979	16.976362	3.001979	10.302600	3.001979	3.441912	3.004595	42.021218
3.002130	3.085099	3.002130	16.946331	3.002130	10.334957	3.002130	3.351912	3.004745	40.621351
3.002245	3.057359	3.002245	16.955566	3.002245	10.316452	3.002245	3.363451	3.004861	39.639594
3.002396	3.031945	3.002396	16.955566	3.002396	10.304926	3.002396	3.351912	3.005012	38.581614
3.002535	3.045798	3.002535	16.946331	3.002535	10.341866	3.002535	3.356528	3.005151	37.555973

Table C.3-1:
Time and Water Level Data Values Used in Pumping Test Analysis: Burdock Test, Recovery Data

11-2 Time (days)	Drawdown (ft)	11-14C Time (days)	Drawdown (ft)	11-15 Time (days)	Drawdown (ft)	11-19 Time (days)	Drawdown (ft)	11-11C Time (days)	Drawdown (ft)
3.002674	3.055068	3.002674	16.962510	3.002674	10.337248	3.002674	3.437297	3.005289	36.467962
3.002812	3.057359	3.002812	16.950948	3.002812	10.316452	3.002812	3.437297	3.005428	35.574007
3.002986	3.048124	3.002986	16.883978	3.002986	10.286421	3.002986	3.377297	3.005602	34.502157
3.003160	3.050451	3.003160	16.918626	3.003160	10.348810	3.003160	3.377297	3.005776	33.561992
3.003322	3.085099	3.003322	16.877034	3.003322	10.364953	3.003322	3.432682	3.005938	32.691125
3.003495	3.080446	3.003495	16.842385	3.003495	10.328013	3.003495	3.425759	3.006111	31.808696
3.003727	3.064303	3.003727	16.865472	3.003727	10.323396	3.003727	3.409605	3.006343	30.702214
3.003958	3.048124	3.003958	16.840059	3.003958	10.279512	3.003958	3.511143	3.006574	29.701987
3.004201	3.075829	3.004201	16.826206	3.004201	10.328013	3.004201	3.453451	3.006817	28.727157
3.004433	3.126656	3.004433	16.761527	3.004433	10.422724	3.004433	3.358835	3.007048	27.902481
3.004664	3.048124	3.004664	16.775379	3.004664	10.330304	3.004664	3.377297	3.007280	27.126325
3.004884	3.094334	3.004884	16.724587	3.004884	10.362662	3.004884	3.386528	3.007500	26.454114
3.005231	3.055068	3.005231	16.641402	3.005231	10.302600	3.005231	3.458066	3.007847	25.465448
3.005590	3.048124	3.005590	16.655255	3.005590	10.348810	3.005590	3.393451	3.008206	24.559915
3.005926	3.186719	3.005926	16.625259	3.005926	10.302600	3.005926	3.388836	3.008542	23.811480
3.006285	3.080446	3.006285	16.549018	3.006285	10.355718	3.006285	3.349605	3.008901	23.319456
3.006620	3.057359	3.006620	16.477394	3.006620	10.302600	3.006620	3.388836	3.009236	22.707308
3.006968	3.052742	3.006968	16.417332	3.006968	10.323396	3.006968	3.368066	3.009583	22.210649
3.007315	3.048124	3.007315	16.354979	3.007315	10.297982	3.007315	3.393451	3.009931	21.700137
3.007673	3.089717	3.007673	16.301825	3.007673	10.351101	3.007673	3.494989	3.010289	21.258923
3.008009	3.101243	3.008009	16.241798	3.008009	10.358045	3.008009	3.474220	3.010625	20.866227
3.008356	3.195954	3.008356	16.195588	3.008356	10.316452	3.008356	3.508836	3.010972	20.501254
3.009062	3.034272	3.009062	16.068520	3.009062	10.307217	3.009062	3.379605	3.011678	19.852148
3.009745	3.154396	3.009745	16.054667	3.009745	10.291038	3.009745	3.453451	3.012361	19.337019
3.010451	3.061977	3.010451	15.899894	3.010451	10.316452	3.010451	3.416528	3.013067	18.884243
3.011134	3.087390	3.011134	15.786713	3.011134	10.300273	3.011134	3.361143	3.013750	18.438429
3.011840	3.112804	3.011840	15.638884	3.011840	10.339575	3.011840	3.388836	3.014456	18.108086
3.012523	3.122039	3.012523	15.544173	3.012523	10.316452	3.012523	3.391143	3.015139	17.823954
3.013218	3.182101	3.013218	15.472550	3.013218	10.314161	3.013218	3.458066	3.015833	17.537513
3.013912	3.098952	3.013912	15.354752	3.013912	10.307217	3.013912	3.379605	3.016528	17.288046
3.014954	3.025037	3.014954	15.218448	3.014954	10.297982	3.014954	3.409605	3.017570	16.902277
3.015995	3.061977	3.015995	15.045205	3.015995	10.318778	3.015995	3.485759	3.018611	16.613527
3.017048	3.006532	3.017048	14.899667	3.017048	10.344192	3.017048	3.515759	3.019664	16.340938
3.018090	3.055068	3.018090	14.763364	3.018090	10.353427	3.018090	3.506528	3.020706	16.109941

Table C.3-1:
Time and Water Level Data Values Used in Pumping Test Analysis: Burdock Test, Recovery Data

11-2 Time (days)	Drawdown (ft)	11-14C Time (days)	Drawdown (ft)	11-15 Time (days)	Drawdown (ft)	11-19 Time (days)	Drawdown (ft)	11-11C Time (days)	Drawdown (ft)
3.019479	3.108186	3.019479	14.610917	3.019479	10.332631	3.019479	3.458066	3.022095	15.758820
3.020856	3.048124	3.020856	14.421496	3.020856	10.325687	3.020856	3.414220	3.023472	15.500101
3.022245	3.022711	3.022245	14.308315	3.022245	10.341866	3.022245	3.501913	3.024861	15.246000
3.023634	3.036563	3.023634	14.038035	3.023634	10.323396	3.023634	3.504220	3.026250	14.987281
3.025035	3.038889	3.025035	13.987207	3.025035	10.267951	3.025035	3.448836	3.027651	14.830199
3.026423	3.075829	3.026423	13.850939	3.026423	10.311835	3.026423	3.529605	3.029039	14.666191
3.027812	3.094334	3.027812	13.663809	3.027812	10.358045	3.027812	3.414220	3.030428	14.379750
3.029537	3.027328	3.029537	13.550628	3.029537	10.316452	3.029537	3.402682	3.032153	14.231903
3.031285	3.055068	3.031285	13.342737	3.031285	10.316452	3.031285	3.441912	3.033901	13.991672
3.033009	3.075829	3.033009	13.254934	3.033009	10.325687	3.033009	3.430374	3.035625	13.827664
3.034745	3.061977	3.034745	13.146371	3.034745	10.321070	3.034745	3.511143	3.037361	13.647477
3.037060	3.101243	3.037060	12.896887	3.037060	10.355718	3.037060	3.384220	3.039676	13.469616
3.039375	3.075829	3.039375	12.797559	3.039375	10.328013	3.039375	3.499605	3.041991	13.236294
3.041701	3.168249	3.041701	12.642786	3.041701	10.330304	3.041701	3.471912	3.044317	12.996062
3.044005	3.064303	3.044005	12.469543	3.044005	10.330304	3.044005	3.476528	3.046620	12.827437
3.046331	3.057359	3.046331	12.388684	3.046331	10.321070	3.046331	3.501913	3.048947	12.681899
3.048634	3.045798	3.048634	12.099934	3.048634	10.297982	3.048634	3.488066	3.051250	12.517891
3.052106	3.048124	3.052106	12.032963	3.052106	10.328013	3.052106	3.444220	3.054722	12.203727
3.055590	3.034272	3.055590	11.838924	3.055590	10.291038	3.055590	3.483451	3.058206	12.018923
3.059062	3.041180	3.059062	11.656446	3.059062	10.316452	3.059062	3.379605	3.061678	11.797179
3.062535	3.057359	3.062535	11.453137	3.062535	10.311835	3.062535	3.464989	3.065151	11.580035
3.065995	3.029654	3.065995	11.242954	3.065995	10.364953	3.065995	3.374990	3.068611	11.395230
3.069468	3.057359	3.069468	11.085855	3.069468	10.431959	3.069468	3.464989	3.072083	11.210426
3.072951	3.048124	3.072951	11.011940	3.072951	10.263334	3.072951	3.361143	3.075567	11.048727
3.076470	3.087390	3.076412	10.850259	3.076505	10.302600	3.076412	3.368066	3.079028	10.907824
3.079942	3.061977	3.079942	10.653893	3.079977	10.286421	3.079896	3.370374	3.082500	10.704532
3.083530	3.006532	3.083530	10.515299	3.083449	10.270277	3.083484	3.351912	3.086100	10.554394
3.090590	3.087390	3.090590	10.221931	3.090509	10.247155	3.090544	3.340374	3.093160	10.263335
3.097419	3.048124	3.097419	10.027892	3.097338	10.205563	3.097373	3.326528	3.099988	10.020778
3.104363	3.041180	3.104363	9.868502	3.104282	10.191710	3.104317	3.342682	3.106933	9.722793
3.111308	3.001914	3.111308	9.542777	3.111227	10.161679	3.111262	3.261913	3.113877	9.533371
3.118252	3.013476	3.118252	9.351064	3.118171	10.177858	3.118206	3.268836	3.120822	9.297757
3.125197	3.018093	3.125197	9.136229	3.125116	10.170914	3.125151	3.280374	3.127766	9.062125
3.132141	3.001914	3.132141	8.946807	3.132060	10.085473	3.132095	3.261913	3.134711	8.865778

Table C.3-1:
Time and Water Level Data Values Used in Pumping Test Analysis: Burdock Test, Recovery Data

11-2 Time (days)	Drawdown (ft)	**11-14C** Time (days)	Drawdown (ft)	**11-15** Time (days)	Drawdown (ft)	**11-19** Time (days)	Drawdown (ft)	**11-11C** Time (days)	Drawdown (ft)
3.139086	2.997297	3.139086	8.755059	3.139005	10.043881	3.139039	3.259605	3.141655	8.678665
3.149502	3.025037	3.149502	8.542550	3.149421	10.020794	3.149456	3.201912	3.152072	8.394532
3.159919	3.018093	3.159919	8.369307	3.159838	9.988436	3.159873	3.197297	3.162488	8.124270
3.170336	2.964975	3.170336	8.092118	3.170255	9.875255	3.170289	3.178836	3.172905	7.951027
3.180752	2.953413	3.180752	7.958106	3.180671	9.771310	3.180706	3.144220	3.183322	7.696925
3.194641	2.925709	3.194641	7.593150	3.194560	9.674272	3.194595	3.104990	3.197211	7.368892
3.208530	2.941852	3.208530	7.445286	3.208449	9.611919	3.208484	3.132682	3.211100	7.227988
3.222419	2.916438	3.222419	7.110361	3.222338	9.440967	3.222373	3.102682	3.224988	6.978505
3.236308	2.877172	3.236308	6.913996	3.236227	9.343965	3.236262	3.102682	3.238877	6.726712
3.250197	2.854085	3.250197	6.789254	3.250116	9.253872	3.250151	3.044989	3.252766	6.521129
3.264086	2.821728	3.264086	6.609067	3.264005	9.133747	3.264039	3.042682	3.266655	6.370973
3.277974	2.796349	3.277974	6.359618	3.277893	9.057506	3.277928	2.998836	3.280544	6.190804
3.295336	2.805584	3.295336	6.246402	3.295255	8.875028	3.295289	2.964220	3.297905	5.945938
3.312697	2.872555	3.312697	6.077777	3.312616	8.766465	3.312651	2.941143	3.315266	5.779621
3.330058	2.810202	3.330058	5.916095	3.329977	8.583952	3.330012	3.038066	3.332627	5.627157
3.347419	2.784788	3.347419	5.733582	3.347338	8.438414	3.347373	2.945759	3.349988	5.426191
3.370567	2.727017	3.370567	5.514129	3.370486	8.295202	3.370521	2.890374	3.373137	5.204430
3.393715	2.715491	3.393715	5.336269	3.393634	8.068841	3.393669	2.844220	3.396285	5.054274
3.416863	2.634632	3.416863	5.156082	3.416782	7.932537	3.416817	2.830374	3.419433	4.848691
3.440127	2.639250	3.440127	4.957425	3.440046	7.729263	3.440081	2.784220	3.442697	4.696227
3.463160	2.655428	3.463160	4.832683	3.463079	7.556020	3.463113	2.731143	3.465729	4.548398
3.486308	2.576896	3.486308	4.701033	3.486227	7.412773	3.486262	2.682682	3.488877	4.389007
3.521030	2.537630	3.521030	4.520846	3.520949	7.110171	3.520984	2.687297	3.523600	4.261956
3.555752	2.445211	3.555752	4.262127	3.555671	6.911514	3.555706	2.613451	3.558322	4.070226
3.590474	2.401327	3.590474	4.142003	3.590393	6.645887	3.590428	2.509605	3.593044	3.922379
3.625197	2.387475	3.625197	3.984938	3.625116	6.458756	3.625151	2.541913	3.627766	3.806872
3.659919	2.320469	3.659919	3.855544	3.659838	6.262426	3.659873	2.486528	3.662488	3.647481
3.694641	2.281203	3.694641	3.696188	3.694560	6.059117	3.694595	2.414989	3.697211	3.541227
3.729711	2.269641	3.729711	3.603769	3.729630	5.839664	3.729664	2.368835	3.732280	3.393398
3.764086	2.198053	3.764086	3.490588	3.764005	5.659512	3.764039	2.350374	3.766655	3.300995
3.798808	2.174930	3.798808	3.361229	3.798727	5.483943	3.798762	2.331913	3.801377	3.134679
3.833530	2.131047	3.833530	3.296549	3.833449	5.363819	3.833484	2.297297	3.836100	3.104648
3.902974	2.059459	3.902974	3.146393	3.902893	5.033476	3.902928	2.267297	3.905544	2.956801
3.973113	2.089490	3.973113	3.010090	3.973032	4.802497	3.973067	2.179605	3.975683	2.804336

Table C.3-1:
Time and Water Level Data Values Used in Pumping Test Analysis: Burdock Test, Recovery Data

11-2 Time (days)	Drawdown (ft)	**11-14C** Time (days)	Drawdown (ft)	**11-15** Time (days)	Drawdown (ft)	**11-19** Time (days)	Drawdown (ft)	**11-11C** Time (days)	Drawdown (ft)
4.041863	1.948569	4.041863	2.797581	4.041782	4.504512	4.041817	2.274220	4.044433	2.663433
4.111308	1.927773	4.111308	2.605868	4.111227	4.303529	4.111262	2.031913	4.113877	2.538691
4.180752	1.796087	4.180752	2.529627	4.180671	4.035576	4.180706	1.974220	4.183322	2.340035
4.250197	1.752204	4.250197	2.402559	4.250116	3.811505	4.250151	1.928066	4.252766	2.270737
4.319641	1.708320	4.319641	2.354058	4.319560	3.635936	4.319595	1.907297	4.322211	2.125199
4.389086	1.664436	4.389086	2.250112	4.389005	3.476545	4.389039	1.828836	4.391655	2.072063
4.493252	1.664436	4.493252	2.160019	4.493171	3.296359	4.493206	1.798836	4.495822	1.975044
4.597419	1.560491	4.597419	2.065308	4.597338	3.109263	4.597373	1.734220	4.599988	1.963500
4.701586	1.535077	4.701586	1.919770	4.701505	2.919842	4.701539	1.701913	4.704155	1.820288
4.805752	1.456545	4.805752	1.910535	4.805671	2.751216	4.805706	1.688066	4.808322	1.732504
4.944641	1.433422	4.944641	1.792737	4.944560	2.612622	4.944595	1.618836	4.947211	1.644719
5.083530	1.361834	5.083530	1.665668	5.083449	2.460140	5.083368	1.549605	5.086100	1.554625
5.222419	1.347946	5.222419	1.540926	5.222338	2.229161	5.222373	1.480374	5.224988	1.439136
5.361308	1.165469	5.361308	1.370010	5.361227	2.097475	5.361146	1.436528	5.363877	1.337481
5.500197	1.075375	5.500197	1.339979	5.500116	1.917288	5.500150	1.471143	5.502766	1.191961
5.639086	1.015313	5.639086	1.268355	5.639005	1.797164	5.633947	1.401912	5.641655	1.044114
5.777974	0.971429	5.777974	1.092786	5.777894	1.688601	5.777813	1.187297	5.780544	1.030262
5.909340	0.927546	5.909340	1.182879	5.909375	1.612395	5.893901	1.094989	5.911910	1.062601

General Methodology: PSI, temperature, and time readings from Win-Situ™ digital data log were exported to Excel ".csv" file.
Drawdown was calculated as PSI at time after pumping minus average PSI before pumping; therefore, at small or zero changes in PSI negative drawdowns may be calculated.
A FORTRAN program was written to read the ".csv" file and produce a second file by extracting the records at a frequency of 40 per log-time cycle (in minutes) in order achieve equal representation of data throughout the pumping and drawdown phases of the test.

Note [ ] Extracted manually from digital data log.

Knight Piésold
CONSULTING

Appendix C-4
Additional Aquifer Parameter Determinations

Theis

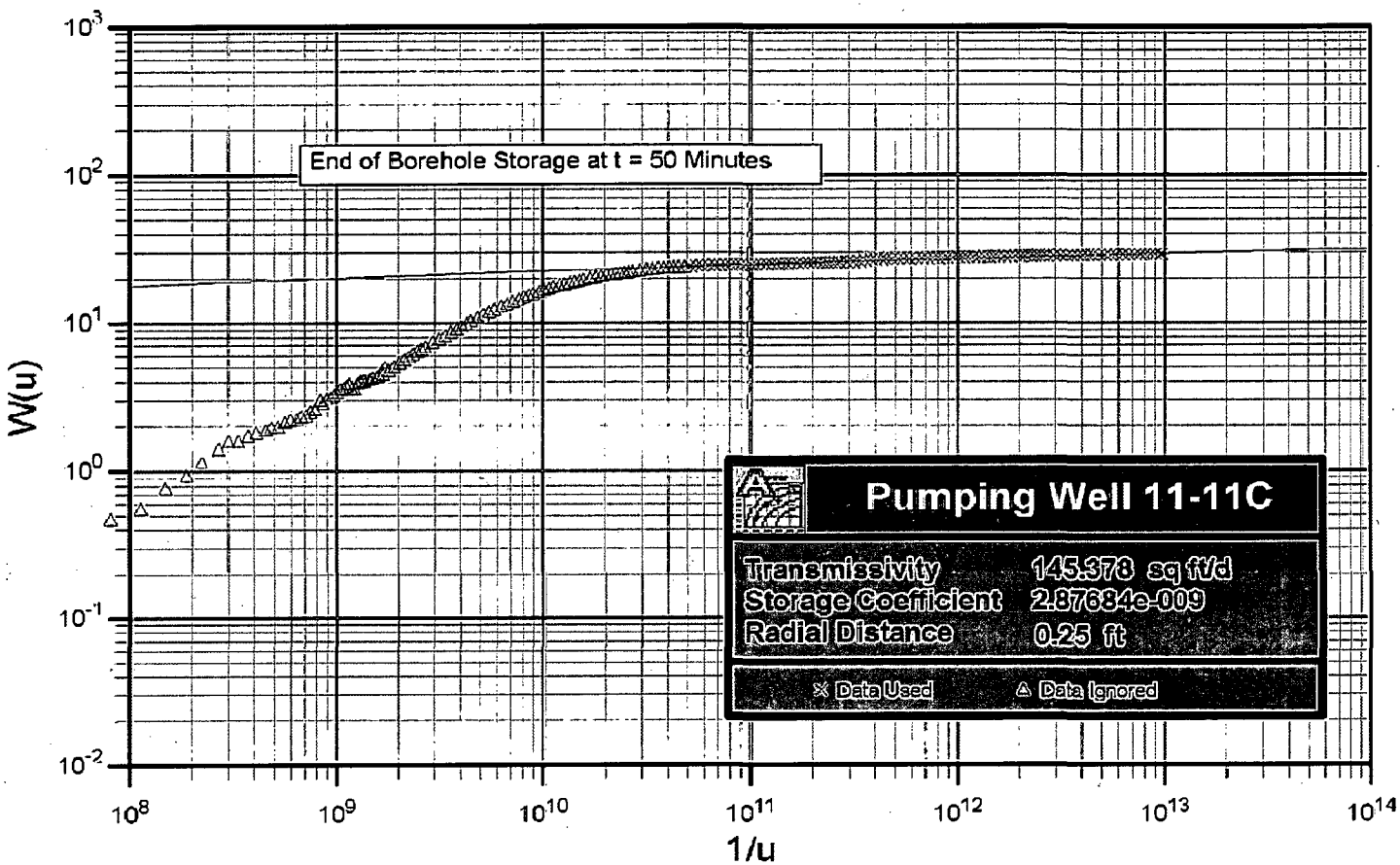

Client	Project	Title	
Knight Piésold CONSULTING	DEWEY-BURDOCK HYDROGEOLOGIC TESTING REPORT	Theis Drawdown Analysis at Burdock Pumping Well 11-11C	
	Project No: DV10200279.01	Date: 10/16/08	Appendix C, Figure C.4-1

Theis

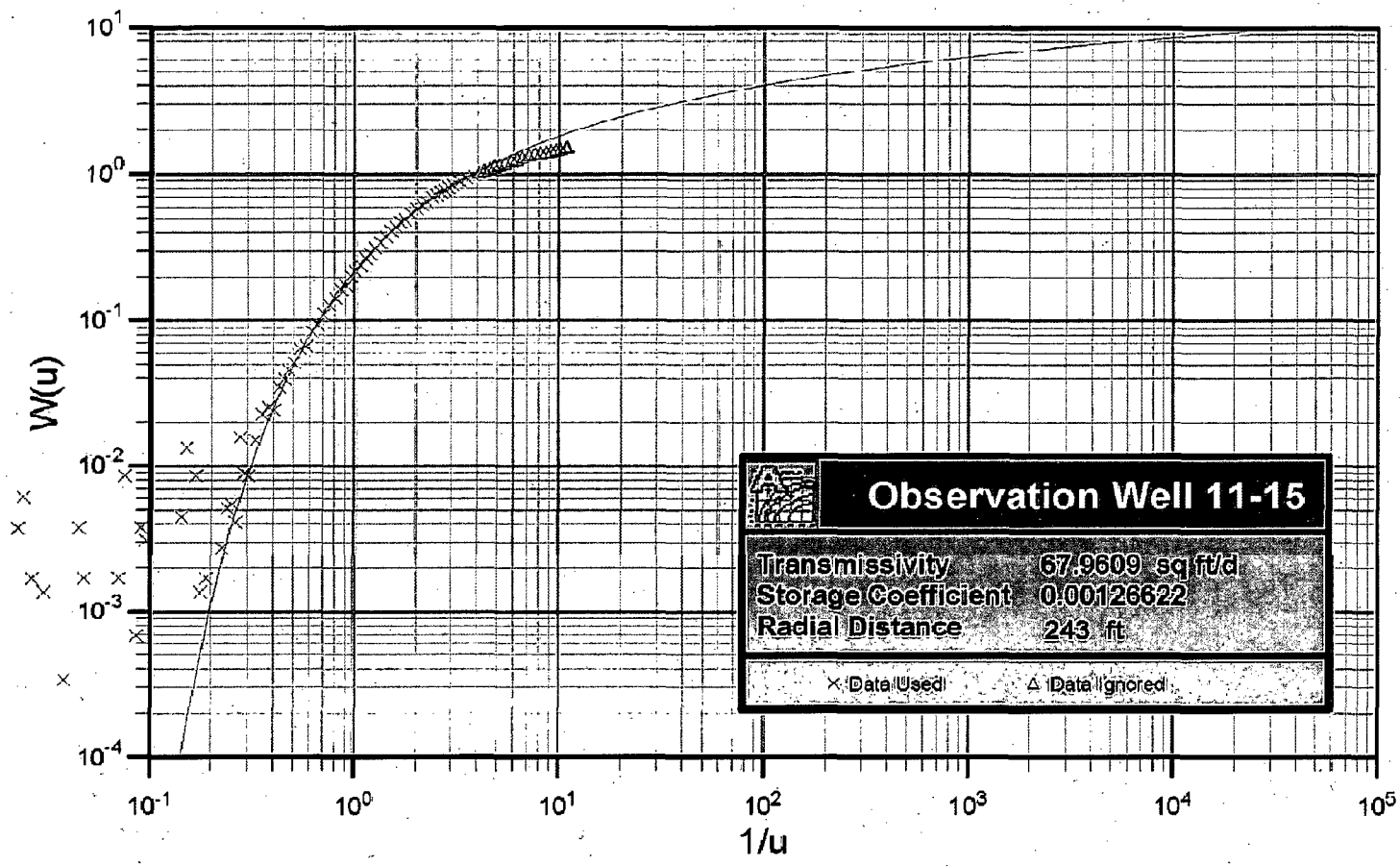

Client	Project	Title	
Knight Piésold CONSULTING	DEWEY-BURDOCK HYDROGEOLOGIC TESTING REPORT	Theis Drawdown Analysis at Burdock Observation Well 11-15	
	Project No: DV10200279.01	Date: 10/16/08	Appendix C, Figure C.4-2

Theis

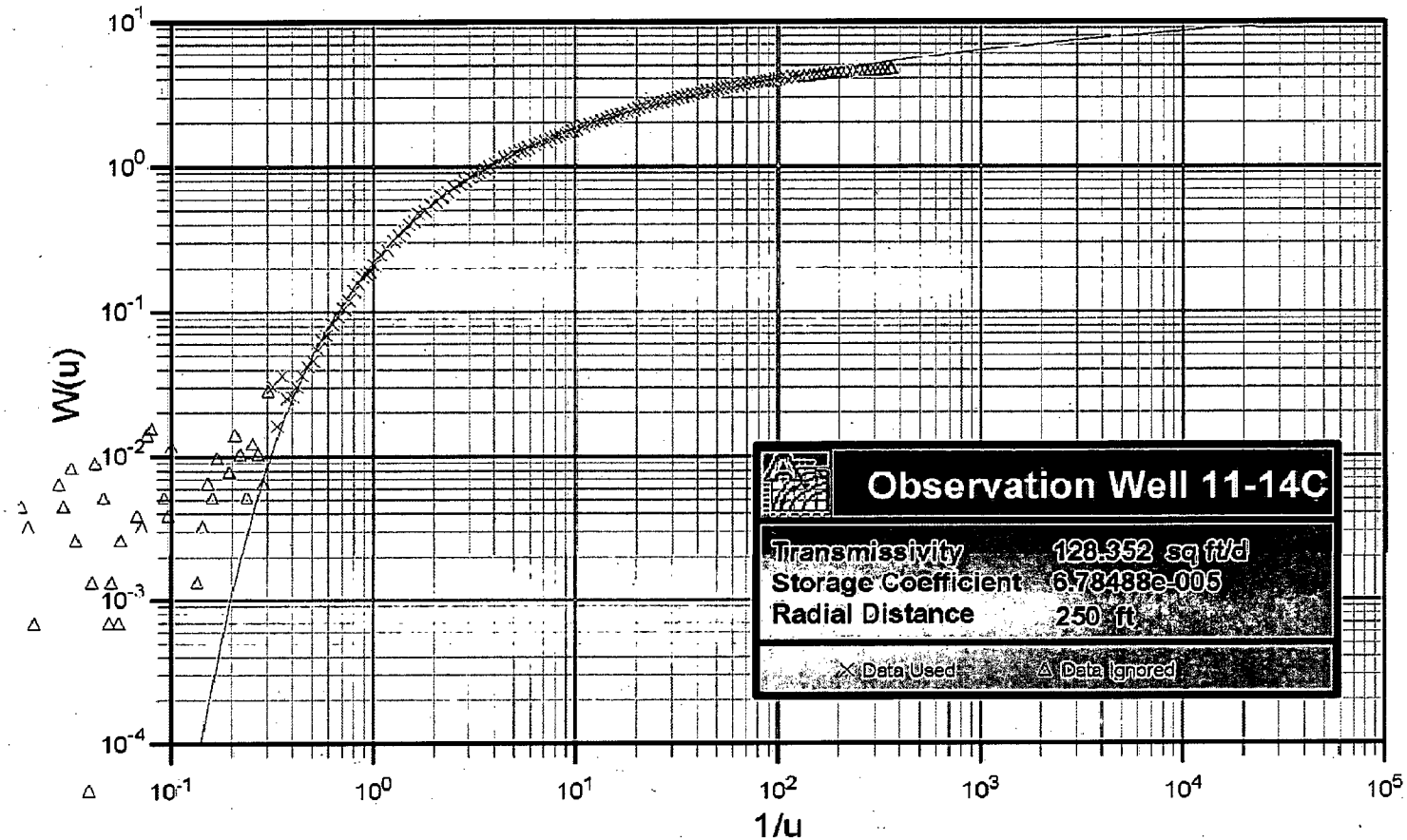

Client	Project	Title	
Knight Piésold CONSULTING	DEWEY-BURDOCK HYDROGEOLOGIC TESTING REPORT	Theis Drawdown Analysis at Burdock Observation Well 11-14C	
	Project No: DV10200279.01	Date: 10/16/08	Appendix C, Figure C.4-3

Theis Recovery

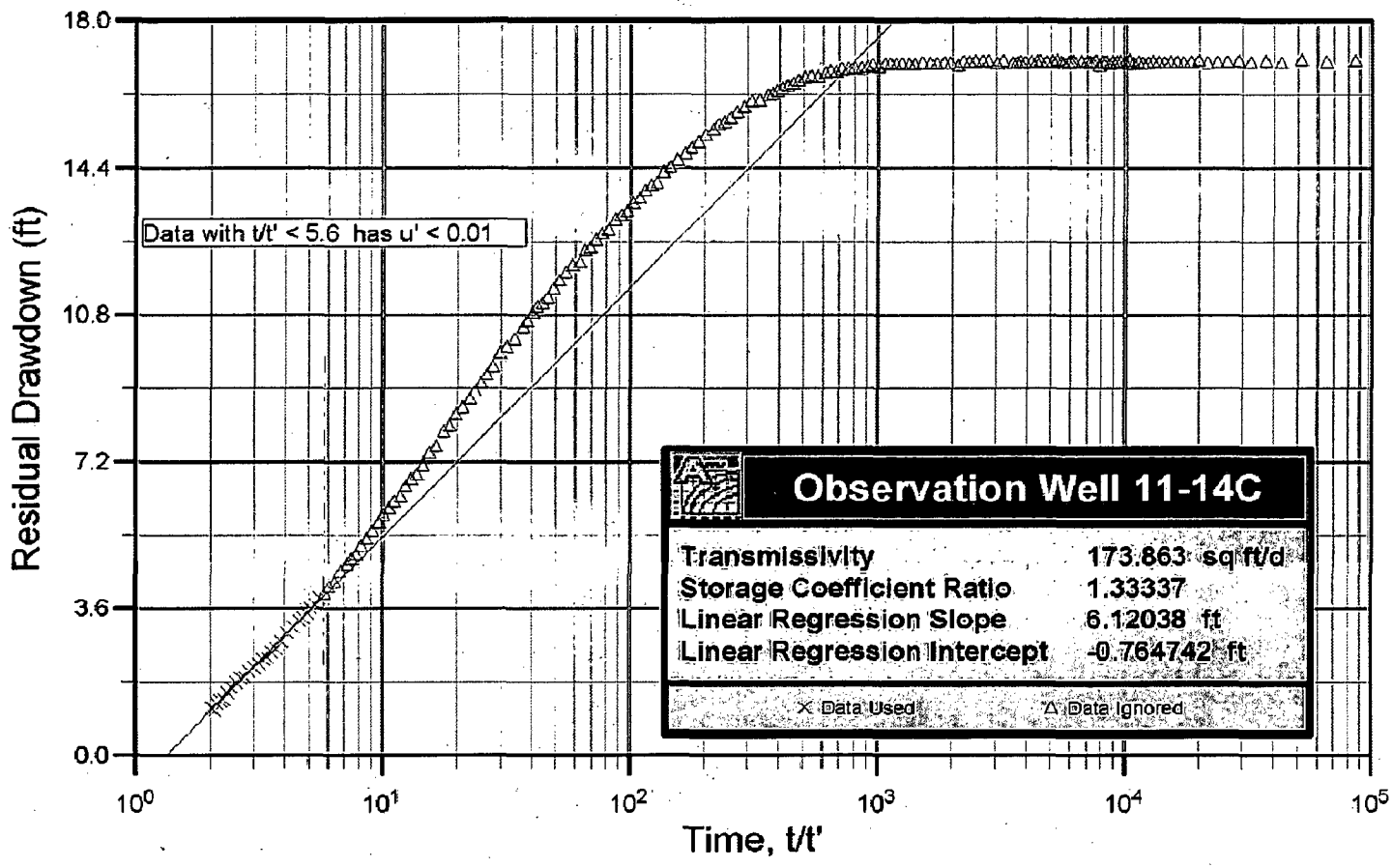

Client	Project	Title	
Knight Piésold CONSULTING	DEWEY-BURDOCK HYDROGEOLOGIC TESTING REPORT	Theis Recovery Analysis at Burdock Observation Well 11-14C	
	Project No: DV10200279.01	Date: 10/16/08	Appendix C, Figure C.4-4

Theis

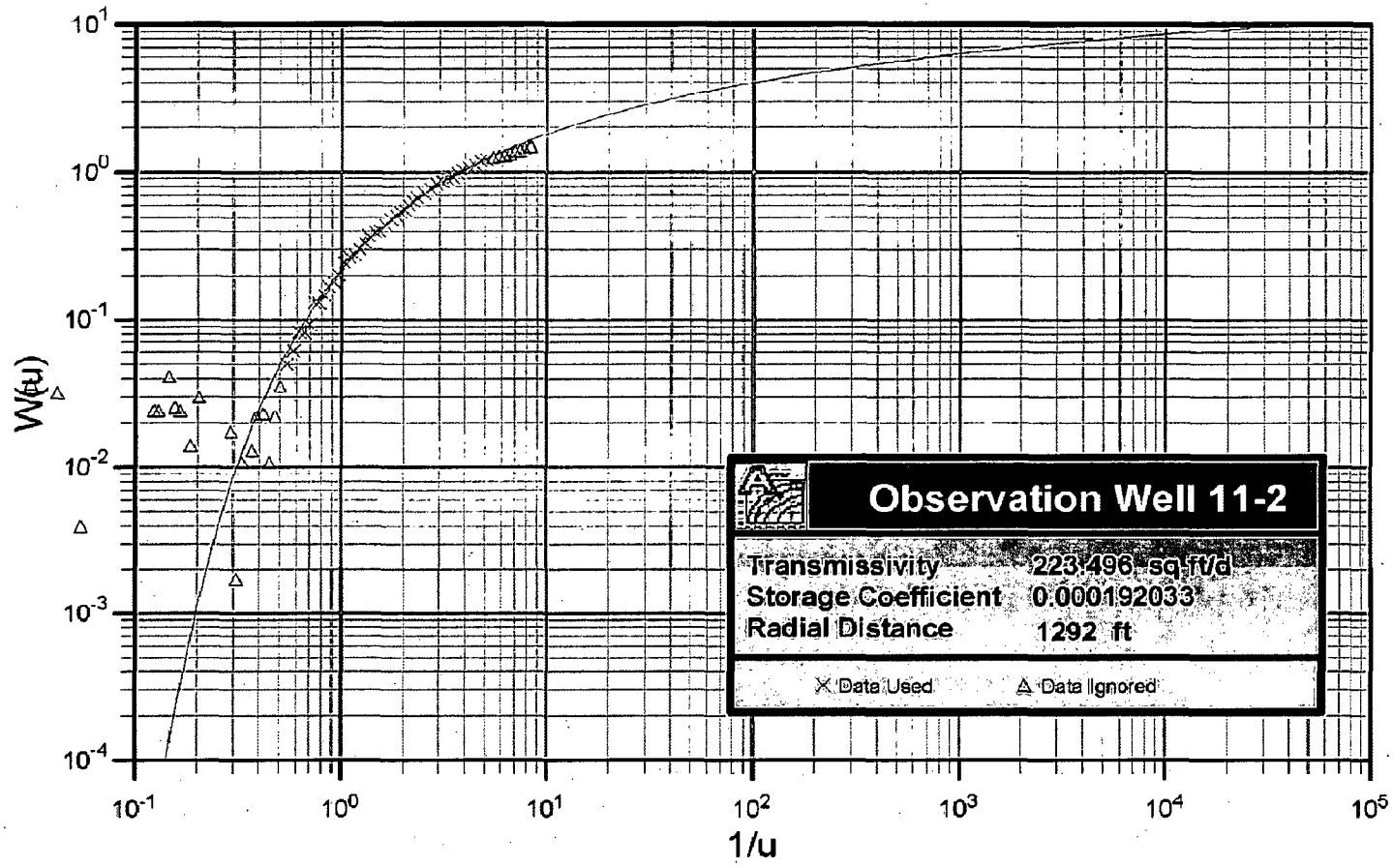

Client	Project	Title	
Knight Piésold CONSULTING	DEWEY-BURDOCK HYDROGEOLOGIC TESTING REPORT	Theis Drawdown Analysis at Burdock Observation Well 11-2	
	Project No: DV10200279.01	Date: 10/16/08	Appendix C, Figure C.4-5

Hantush and Jacob (1955)

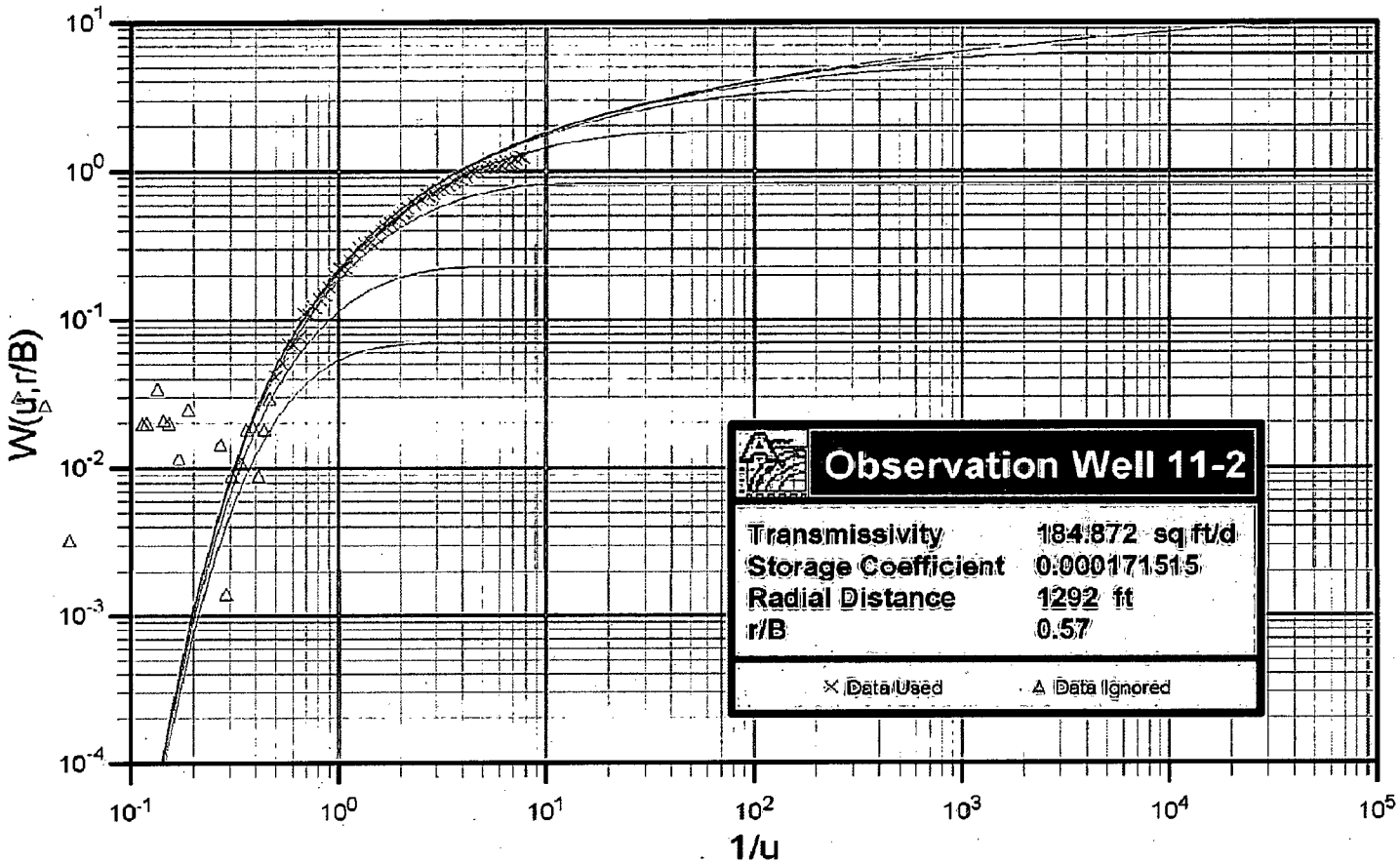

Client	Project	Title	
Knight Piésold CONSULTING	DEWEY-BURDOCK HYDROGEOLOGIC TESTING REPORT	Hantush-Jacob Leaky Confined Aquifer Analysis at Burdock Observation Well 11-2	
	Project No: DV10200279.01	Date: 10/16/08	Appendix C, Figure C.4-6

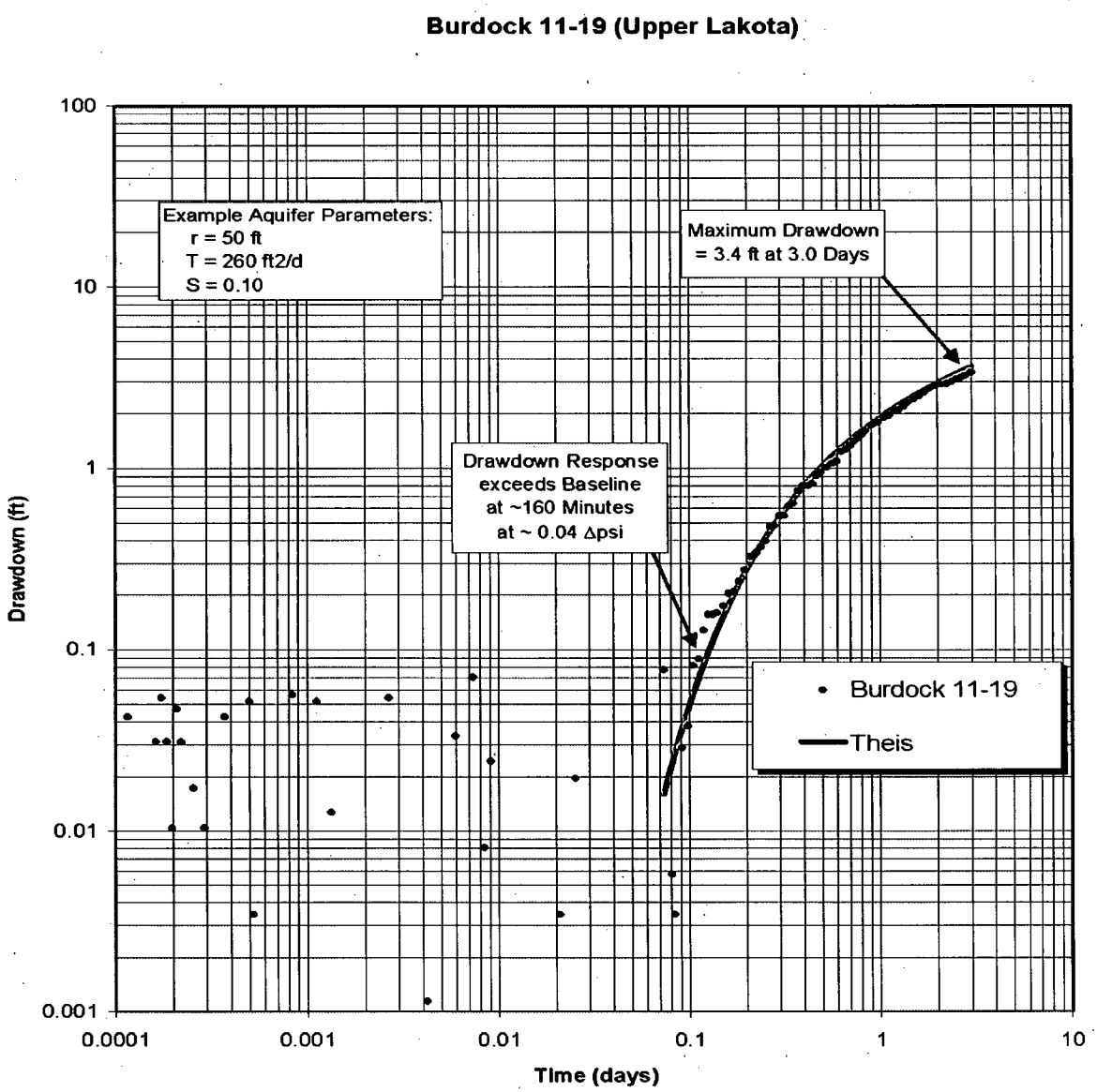

Client	Project	Title	
Knight Piésold CONSULTING	DEWEY-BURDOCK HYDROGEOLOGIC TESTING REPORT	Drawdown and Analysis at Burdock Test Observation Well 11-19 (Upper Lakota)	
	Project No: DV10200279.01	Date: 10/16/08	Appendix C, Figure C.4-7

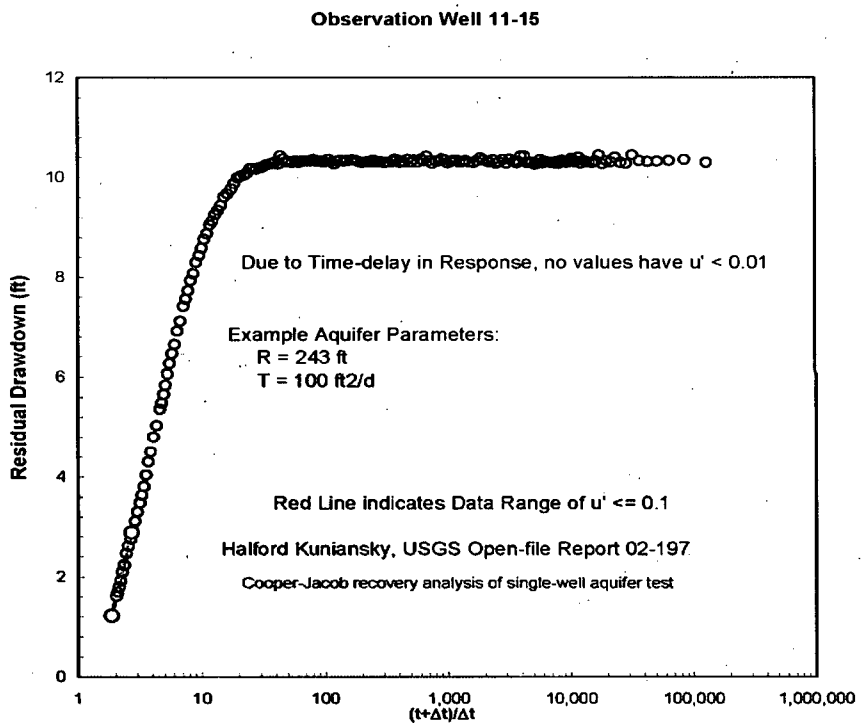

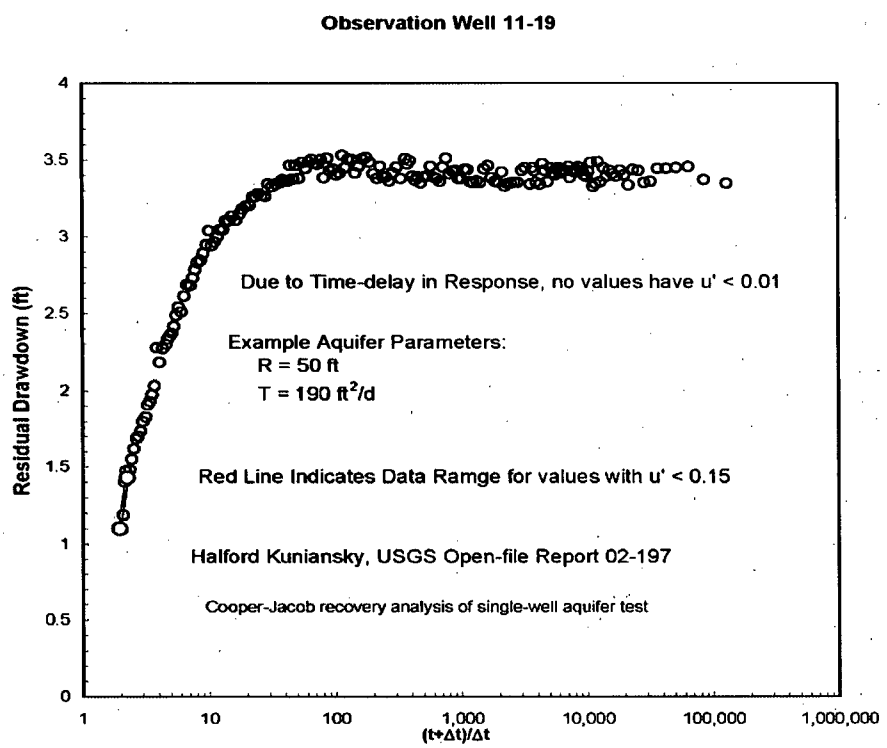

Client	Project	Title	
Knight Piésold CONSULTING	DEWEY-BURDOCK HYDROGEOLOGIC TESTING REPORT	Theis-Cooper-Jacob Recovery Analyses at Burdock Observation Wells 11-15 and 11-19	
	Project No: DV10200279.01	Date: 10/16/08	Appendix C, Figure C.4-8

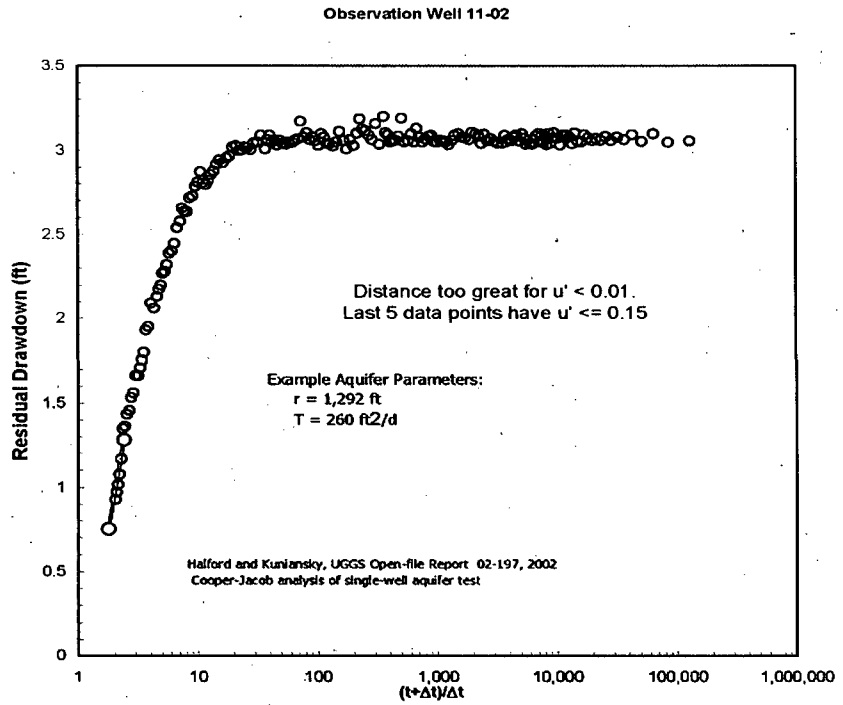

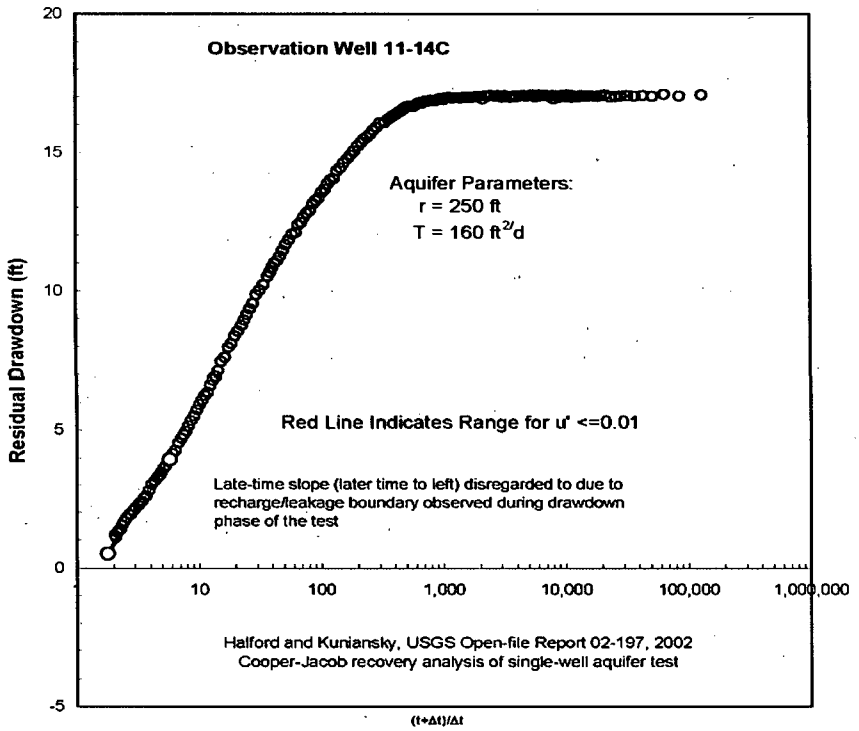

Client	Project	Title	
Knight Piésold CONSULTING	DEWEY-BURDOCK HYDROGEOLOGIC TESTING REPORT	Theis-Cooper-Jacob Recovery at Burdock Observation Wells 11-14C and 11-02	
	Project No: DV10200279.01	Date: 10/16/08	Appendix C, Figure C.4-9

Knight Piésold
CONSULTING

Appendix D
Laboratory Core Data

Core Lab
PETROLEUM SERVICES

CONVENTIONAL PLUG ANALYSIS

Powertech USA Inc.

Various samples

CL File Number: HOU-070985

Date: January 25, 2008

CONVENTIONAL PLUG ANALYSIS PROTOCOL

Sample Preparation
1.0" diameter plugs were drilled with liquid nitrogen and trimmed into right cylinders with a diamond-blade trim saw. The samples were encapsulated in Teflon tape and stainless steel screens. All sample trims were archived.

Core Extraction
Samples soaked in methanol to remove any salt present.

Sample Drying
Samples were humidity oven dried at 140° F and 40% relative humidity to weight equilibrium.

Porosity
Porosity was determined using Boyle's Law technique by measuring grain volume at ambient conditions & pore volume at indicated net confining stresses (NCS)

Grain Density
Grain density values were calculated by direct measurement of grain volume and weight on dried plug samples. Grain volume was measured by Boyle's Law technique.

Permeability
Permeability to air was measured on each sample using steady-state method at indicated NCS.

PowerTech USA
Various samples

Start Date: 10-19-07
File No: HOU-070985

Core Sample Log (Updated 01-25-08)

Smpl No.	Depth (ft)	Plug Quality Good	Fair	Poor	Failed	Vert	Smpl Len	Smpl Dia	End Trims	Remarks	Material Weights Teflon	Screens
1H	252.20		x				1.33	1.00		DB 07-11-11C	0.717	0.611
1V	252.35			x		x	0.67	1.00		DB 07-11-11C	0.465	0.651
2H	480.70	x					1.75	1.00		DB 07-29-1C	1.044	0.596
2V	480.80			x		x	1.00	1.00		DB 07-29-1C	0.805	0.604
3H	609.10	x					2.20	1.00		DB 07-29-1C	1.328	0.601
3V	609.20					x	1.88	1.00		DB 07-29-1C	1.220	0.605
4H	412.30	x					2.33	1.00		DB 07-11-11C	1.505	0.599
4V	412.45		x			x	1.66	1.00		DB 07-11-11C	1.325	0.602
5H	423.60	x					2.00	1.00		DB 07-11-14C	0.812	0.729
5V	423.35	x				x	1.80	1.00		DB 07-11-14C	0.552	0.734
6H	430.20		x				0.70	1.00		DB 07-11-14C	0.410	0.737
6V	430.35	x				x	1.50	1.00		DB 07-11-14C	0.594	0.752
7H	453.50	x					1.70	1.00		DB 07-11-14C	0.625	0.744
7V	453.45		x			x	0.75	1.00		DB 07-11-14C	0.315	0.719
8H	420.40	x					1.25	1.00		DB 07-11-16C	0.471	0.743
8V	420.10	x				x	1.90	1.00		DB 07-11-16C	0.717	0.732
9H	455.90	x					1.25	1.00		DB 07-11-16C	0.575	0.718
9V	455.45	x				x	1.50	1.00		DB 07-11-16C	0.634	0.719
10H	503.30	x					1.50	1.00		DB 07-11-16C	0.557	0.733
10V	503.45				x	x	-	1.00		DB 07-11-16C		
11H	573.25	x					1.25	1.00		DB 07-32-4C	0.567	0.730
11V	573.40	x				x	1.00	1.00		DB 07-32-4C	0.572	0.722
Totals		14	4	2	1	11						

10695
3/3/2008

Analyst: AM

Sample ID	Powertech ID	As Received sample mass (kg)	starting volume (mL)	ending volume (mL)	density (g/mL)	description	time in graduated cylinder (min)
51719-75	DB07-11-11C 425'5" to 427'4"	3.92	1395	3140	2.25	mushy sand	5
51719-25	DB07-29-1C 590' to 592'3"	4.32	1995	3880	2.29	mushy sand	5
51660-24	CN-3C 130-131	1.40	2100	2855	1.85	solid sand	40
51660-60	IN-2C 464-465	1.58	1300	2045	2.12	mushy sand	5
51660-59	IN-1C 464-465	1.02	1250	1750	2.04	clumped, wet sand	5
51719-86	DB07-32-2C 580 - 580.5	0.84	1705	2170	1.81	clumped, wet sand	30
51719-2	DB07-32-4C 550'0" to 551'1"	2.30	1015	1925	2.53	clumped, wet sand	180
51719-35	DB07-11-16C 412'1" to 414'3"	3.30	2100	3565	2.25	clumped, wet sand	960
51719-62	DB07-11-14C 11/1/07 436'7" to 438'7"	3.18	1990	3430	2.21	clumped, wet sand	30

Avg of 7 = 2.24

Powertech USA Inc.
Various samples

CL File No.: HOU-070985
Date: January 25, 2008
Analyst(s): MS,MM,JH

CONVENTIONAL PLUG ANALYSIS

Sample Number	Depth (ft)	Net Confining Stress (psig)	Porosity (%)	Kair (mD)	Grain Density (g/cm3)	Footnote
1H	252.20	600	10.50	1.04	2.356	
1V	252.35	600	10.15	.228	2.356	
4H	412.30	600	9.68	.041	2.511	
4V	412.45	600	9.59	.015	2.514	
DB 07-29-1C						
2H	480.70	600	8.90	.078	2.613	
2V	480.80	600	9.30	.007	2.610	
3H	609.10	600	12.26	.073	2.603	
3V	609.20	600	10.84	.008	2.793	
DB 07-11-14C						
5H	423.60	600	29.56	3207	2.645	
5V	423.35	600	30.34	1464	2.645	
6H	430.20	600	31.90	4161	2.640	
6V	430.35	600	30.16	939	2.646	
7H	453.50	600	10.86	1.00	2.519	
7V	453.45	600	11.82	.043	2.543	
DB 07-11-16C						
8H	420.40	600	30.50	2697	2.643	
8V	420.10	600	30.17	1750	2.651	
9H	455.90	600	6.99	.004	2.536	
9V	455.45	600	7.65	.012	2.556	
10H	503.30	600	12.96	.697	2.474	
10V	503.45	600				(6)
DB 07-32-4C						
11H	573.25	600	29.15	2802	2.641	
11V	573.40	600	29.04	619	2.645	

Footnotes :

(6) : Denotes all plug attempts failed.

Core Analyses for Powertach USA Inc. at Dewey-Burdock Site

Sample Number	Depth (ft)	Confining Stress (psig)	Porosity (%)	Air Intrinsic Permeability[1] k_a (mD)	Particle Density (g/cm^3)	Notes
DB 07-11-11C						
1H	252.20	600	10.50	1.040	2.356	Fuson Shale
1V	252.35	600	10.15	0.228	2.356	Fuson Shale
4H	412.30	600	9.68	0.041	2.511	Fuson Shale
4V	412.45	600	9.59	0.015	2.514	Fuson Shale
DB 07-29-1C						
2H	480.70	600	8.90	0.078	2.613	Skull Creek shale
2V	480.80	600	9.30	0.007	2.610	Skull Creek shale
3H	609.10	600	12.26	0.073	2.603	Fuson Shale
3V	609.10	600	10.84	0.008	2.793	Fuson Shale
DB 07-11-14C						
5H	423.60	600	29.56	3,207	2.645	
5V	423.35	600	30.34	1,464	2.645	
6H	430.20	600	31.90	4,161	2.640	
6V	430.35	600	30.16	939	2.646	
7H	453.50	600	10.86	1.000	2.519	Morrison Shale
7V	453.45	600	11.82	0.043	2.543	Morrison Shale
DB-07-11-16C						
8H	420.40	600	30.50	2,697	2.643	
8V	420.10	600	30.17	1,750	2.651	
9H	455.90	600	6.99	0.004	2.536	Morrison Shale
9V	455.45	600	7.65	0.012	2.556	Morrison Shale
10H	503.30	600	12.96	0.697	2.474	Morrison Shale
10V	503.45	600	No data			
DB 07-32-4C						
11H	573.25	600	29.15	2,802	2.641	
11V	573.40	600	29.04	619	2.645	

(1) Assumed air temperature = 70°F.

(2) Assumed water temperature = 52.8°F, water density = 0.999548 g/cm^3, and water dynamic viscosity = 0.0125

(3) $K_w = k_a \times (\rho_w g/\mu_w)$, and 1.0 mD = 0.987×10^{-11} cm^2 (See Constants Tab).

Hole No	mDarcy horizontal perm	verical perm	ratio h/v	% horizontal porosity	verical porosity
DB 07-11-14C	3207	1464	2.2:1	29.56	30.34
	4161	939	4.4:1	31.9	30.16
DB 07-11-16C	2697	1750	1.5:1	30.5	30.17
DB 07-32-4C	2802	619	4.5:1	29.15	29.04
Avg	3217	1193	2.7:1	30.3	29.9

Knight Piésold
CONSULTING

Appendix E
CD-ROM: Raw Pressure Transducer Data in WinSitu™ Format

POWERTECH (USA) INC.

APPENDIX 2.7-C

STATISTICS FOR SURFACE WATER CONSTITUENTS AT OR ABOVE PQL

POWERTECH (USA) INC.

Appendix 2.7-C
Statistics for Surface Water Xonstituents at or above PQL by Xonstituent

Constituent, Unit	PQL	n Analyzed	n Detected	% exceeding detection	Mean	StDev	Q1	Median	Q3
Microbiological									
Bacteria, Fecal Coliform (cfu/100ml)	2	81	51	63.0%	510.1	1260	12	32	170
Major Anions and Cations									
Anions (meq/L)		81	81	100%	43.8	34.3	13.7	43.5	62.5
Bicarbonate as HCO3 (mg/L)	5	81	70	86.4%	179.8	98.9	102	156	240.3
Carbonate as CO3 (mg/L)	5	81	1	1.2%	17.0			17	
Sulfate (mg/L)	36	81	81	100%	1636	1447	473.5	1450	2365
Chloride (mg/L)	1	82	81	98.8%	265	394.1	9.5	78	338
Fluoride (mg/L)	0.1	81	75	92.6%	0.666	1.135	0.3	0.4	0.5
Nitrogen, Nitrate as N (mg/L)	0.1	81	36	44.4%	0.387	0.218	0.225	0.4	0.5
Cations (meq/L)		81	81	100%	43.5	33.4	13.85	43.5	61.55
Ammonia as N (mg/L)	1	61	16	26.2%	1.32	1.34	0.225	0.8	2.325
Sodium-Dissolved (mg/L)	0.8	66	66	100%	380.5	411.4	19.75	198.5	652.8
Calcium-Dissolved (mg/L)	0.5	66	66	100%	276.2	195.1	72.83	294	451.3
Magnesium-Dissolved (mg/L)	0.5	66	66	100%	132.4	168.0	27.05	104	172
Potassium-Dissolved (mg/L)	0.5	66	66	100%	13.67	9.64	6	11	17
Silica-Dissolved (mg/L)	0.5	66	59	89.4%	7.76	7.32	2.8	6.1	10.2
General Water Quality Indicators									
Alkalinity-Total as CaCO3 (mg/L)	5	81	70	86.4%	148.3	80.7	87	132	198.5
Anion/Cation Balance (± 5) (%)		81	81	100%	0.15	4.18	-2.62	0.04	3.345
Conductivity @ 25 C (umhos/cm)	5	81	81	100%	3319	2328	1028	3340	5145
pH	0.01	81	81	100%	7.30	1.46	7.33	7.81	8.09
Sodium Adsorption Ratio (meq/L)	0.1	61	58	95.1%	4.93	4.39	0.995	3.65	8.65
Solids-Total Dissolved TDS (mg/L)	5	81	81	100%	2928	2172	960	2900	4050
Solids-Total Dissolved Calculated (mg/L)	5	81	81	100%	2787	2125	898	2920	3905

POWERTECH (USA) INC.

Constituent, Unit	PQL	n Analyzed	n Detected	% exceeding detection	Mean	StDev	Q1	Median	Q3
TDS Balance (0.80 - 1.20) (dec.%)		81	81	100%	1.19	0.61	0.995	1.06	1.12
Solids-Suspended Sediment SSC (mg/L)	5	81	70	86.4%	662.1	1661	14	50	190.5
Solids-Total Suspended TSS (mg/L)	5	81	73	90.1%	282	945	11	26	100
Metals, Dissolved									
Aluminum-Dissolved (mg/L)	0.1	66	19	28.8%	26.23	53.98	0.2	0.5	1.2
Arsenic-Dissolved (mg/L)	0.001	66	27	40.9%	0.0017	0.001	0.001	0.001	0.002
Barium-Dissolved (mg/L)	0.1	66	1	1.5%	0.10			0.1	
Boron-Dissolved (mg/L)	0.1	66	52	78.8%	0.298	0.169	0.2	0.2	0.4
Cadmium-Dissolved (mg/L)	0.005	66	5	7.6%	0.022	0.011	0.0115	0.026	0.031
Chromium-Dissolved (mg/L)	0.05	66	1	1.5%	0.010			0.01	
Copper-Dissolved (mg/L)	0.01	66	5	7.6%	0.084	0.047	0.04	0.1	0.12
Iron-Dissolved (mg/L)	0.03	66	36	54.5%	0.848	1.655	0.05	0.145	0.6925
Lead-Dissolved (mg/L)	0.001	66	6	9.1%	0.0018	0.0013	0.001	0.001	0.0033
Manganese-Dissolved (mg/L)	0.01	66	56	84.8%	17.63	60.63	0.07	0.26	1.935
Mercury-Dissolved (mg/L)	0.001	66	0	0.0%					
Molybdenum-Dissolved (mg/L)	0.1	66	0	0.0%					
Nickel-Dissolved (mg/L)	0.05	66	16	24.2%	1.342	2.295	0.03	0.145	2.365
Selenium-Dissolved (mg/L)	0.001	66	20	30.3%	0.0058	0.0081	0.002	0.0025	0.0055
Selenium-IV-Dissolved (mg/L)	0.001	61	2	3.3%	0.0015	0.0007		0.0015	
Selenium-VI-Dissolved (mg/L)	0.001	61	15	24.6%	0.0034	0.0035	0.002	0.002	0.003
Silver-Dissolved (mg/L)	0.005	66	0	0.0%					
Thorium 232-Dissolved (mg/L)	0.005	66	3	4.5%	0.011	0.002	0.01	0.011	0.013
Uranium-Dissolved (mg/L)	0.003	70	66	94.3%	0.359	1.390	0.0025	0.0125	0.0240
Vanadium-Dissolved (mg/L)	0.1	66	0	0.0%					
Zinc-Dissolved (mg/L)	0.01	66	22	33.3%	0.893	1.869	0.02	0.05	0.22
Metals, Suspended									
Thorium 232-Suspended (mg/L)	0.001	81	15	18.5%	0.0074	0.009	0.003	0.004	0.009
Uranium-Suspended (mg/L)	0.0003	81	37	45.7%	0.00128	0.0013	0.0005	0.0009	0.0015
Metals, Total									

POWERTECH (USA) INC.

Constituent, Unit	PQL	n Analyzed	n Detected	% exceeding detection	Mean	StDev	Q1	Median	Q3
Aluminum-Total (mg/L)	0.1	66	53	80.3%	19.94	42.61	0.40	1.20	9.20
Arsenic-Total (mg/L)	0.001	81	60	74.1%	0.0050	0.008	0.002	0.002	0.004
Barium-Total (mg/L)	0.1	81	14	17.3%	0.343	0.344	0.10	0.20	0.575
Boron-Total (mg/L)	0.2	81	63	77.8%	0.312	0.163	0.20	0.30	0.40
Cadmium-Total (mg/L)	0.005	81	5	6.2%	0.023	0.010	0.0135	0.027	0.031
Calcium-Total (mg/L)	1	57	57	100%	242.2	182.8	71.9	217	373.5
Chromium-Total (mg/L)	0.05	81	7	8.6%	0.116	0.070	0.05	0.08	0.19
Chromium-Hexavalent (mg/L)		66	6	9.1%	0.0093	0.005	0.0058	0.008	0.012
Chromium-Trivalent (mg/L)	0.01	66	3	4.5%	0.053	0.006	0.050	0.050	0.060
Copper-Total (mg/L)	0.01	81	16	19.8%	0.059	0.047	0.02	0.045	0.10
Iron-Total (mg/L)	0.03	81	80	98.8%	8.785	23.31	0.2575	0.695	3.553
Lead-Total (mg/L)	0.001	81	37	45.7%	0.0165	0.030	0.002	0.003	0.013
Magnesium-Total (mg/L)	0.5	57	57	100%	106.1	138.19	28.75	70.5	133
Manganese-Total (mg/L)	0.01	81	80	98.8%	11.00	50.12	0.12	0.34	1.175
Mercury-Total (mg/L)	0.001	91	0	0.0%					
Molybdenum-Total (mg/L)	0.1	81	0	0.0%					
Nickel-Total (mg/L)	0.05	81	14	17.3%	1.244	2.291	0.095	0.16	1.088
Potassium-Total (mg/L)	0.5	57	57	100%	14.94	8.32	8.9	13.2	19
Selenium-Total (mg/L)	0.002	81	41	50.6%	0.0030	0.003	0.001	0.002	0.003
Selenium-IV-Total (mg/L)	0.001	66	2	3.0%	0.0010	0.0000		0.001	
Selenium-VI-Total (mg/L)	0.001	66	23	34.8%	0.0037	0.004	0.001	0.002	0.003
Silica-Total (mg/L)	0.5	57	54	94.7%	22.20	25.09	6.175	11	25.45
Silver-Total (mg/L)	0.005	81	0	0.0%					
Sodium-Total (mg/L)	0.5	57	57	100%	361.51	352.51	42.0	213.0	654.5
Thorium 232-Total (mg/L)	0.005	73	12	16.4%	0.0194	0.015	0.01	0.0125	0.035
Uranium-Total (mg/L)	0.0003	81	79	97.5%	0.3187	1.335	0.0024	0.0122	0.018
Vanadium-Total (mg/L)	0.1	81	11	13.6%	0.18	0.11	0.1	0.1	0.3
Zinc-Total (mg/L)	0.01	81	41	50.6%	0.583	1.569	0.02	0.05	0.185
Radionuclides									

POWERTECH (USA) INC.

Constituent, Unit	PQL	n Analyzed	n Detected	% exceeding detection	Mean	StDev	Q1	Median	Q3
Lead 210-Dissolved (pCi/L)	1	46	23	50.0%	2.7	6.0	-0.9	0.7	4.6
Lead 210-Suspended (pCi/L)	1	46	21	45.7%	3.68	9.51	1.05	4.4	7.45
Lead 210-Total (pCi/L)	1	37	23	62.2%	7.8	10.1	2.2	4.6	12.0
Polonium 210-Dissolved (pCi/L)	1	46	30	65.2%	1.0	1.0	0	0.75	1.8
Polonium 210-Suspended (pCi/L)	1	46	27	58.7%	1.73	1.253	0.9	1.4	2.5
Polonium 210-Total (pCi/L)	1	37	32	86.5%	2.1	1.31	0.95	2.05	3.25
Radium 226-Dissolved (pCi/L)	0.2	63	48	76.2%	0.75	1.14	0.1	0.25	0.7
Radium 226-Suspended (pCi/L)	0.2	70	40	57.1%	0.526	1.207	-0.4	0.3	1
Radium 226-Total (pCi/L)	0.2	73	51	69.9%	0.95	1.41	0.10	0.60	1.50
Thorium 230-Dissolved (pCi/L)	0.2	70	43	61.4%	2.12	6.60	0	0.1	0.3
Thorium 230-Suspended (pCi/L)	0.2	70	47	67.1%	0.740	0.893	0.2	0.4	0.9
Thorium 230-Total (pCi/L)	0.2	61	41	67.2%	2.35	6.46	0.2	0.5	1.3
Gross Alpha-Total (pCi/L)	1	81	80	98.8%	299.8	1320.0	6.775	15.9	26.4
Gross Beta-Total (pCi/L)	2	81	77	95.1%	153.4	619.1	9.2	13.4	22.1
Gross Gamma-Total (pCi/L)	20	66	37	56.1%	394	535	0.0	0.0	1075

PQL = Practical Quantitation Limit. The concentration that can be reliably measured within specified limits during routine laboratory operating conditions, below which results are reported as "less than PQL".
n Analyzed = The number of samples analyzed for a particular constituent.
n Detected = The number of samples where a particular constituent was detected at or above the PQL.
Mean = Arithmetic mean of those constituents detected above detection limit
StDev = Standard deviation of those constituents detected at or above PQL.
Q1 = First Quartile. The value holding ranked position 0.25 x (n Detected + 1) for each constituent. Value may be interpolated.
Q3 = Third Quartile. The value holding ranked position 0.75 x (n Detected + 1) for each constituent. Value may be interpolated.
Median = The middle value of ranked n Detected. Value may be interpolated.

POWERTECH (USA) INC.

APPENDIX 2.7-D

MINIMUM AND MAXIMUM RESULTS FOR SAMPLED CONSTITUENT ABOVE PQL

POWERTECH (USA) INC.

Appendix 2.7-D
Minimum and Maximum Results for Sampled Constituent above PQL, Sampled Site and Date of Sampling

	Minimum at or above PQL			Maximum at or above PQL		
Constituent, Unit	Concentration	Site ID	Collection Date	Concentration	Site ID	Collection Date
Microbiological						
Bacteria, Fecal Coliform (cfu/100ml)	2	Sub09	3/24/2008	5700	BVC01	5/26/2008
Major Anions and Cations						
Anions (meq/L)	0.66	Sub11	3/24/2008	154	Sub06	2/10/2008
Bicarbonate as HCO3 (mg/L)	7.0	Sub11	6/23/2008	429	CHR05	10/17/2007
Carbonate as CO3 (mg/L)	17.0	Sub08	9/26/2007	17.0	Sub08	9/26/2007
Sulfate (mg/L)	12.0	Sub11	3/24/2008	7330	Sub06	2/10/2008
Chloride (mg/L)	1.0	Sub11	3/24/2008	1730	BVC04	4/14/2008
Fluoride (mg/L)	0.1	CHR01	9/26/2007	7.4	Sub06	2/10/2008
Nitrogen, Nitrate as N (mg/L)	0.1	Sub11	6/23/2008	1.20	Sub01	3/24/2008
Cations (meq/L)	0.83	Sub11	3/24/2008	145	Sub06	2/10/2008
Ammonia as N (mg/L)	0.10	Sub03	6/18/2008	4.5	Sub06	2/10/2008
Sodium-Dissolved (mg/L)	2.0	Sub07	6/23/2008	1530	CHR01	11/19/2007
Calcium-Dissolved (mg/L)	6.3	Sub11	3/24/2008	622	Sub02	9/27/2007
Magnesium-Dissolved (mg/L)	1.9	Sub11	3/24/2008	878	Sub06	2/10/2008
Potassium-Dissolved (mg/L)	4.0	Sub01	3/24/2008	46	Sub04	11/12/2007
Silica-Dissolved (mg/L)	0.8	Sub11	3/24/2008	37.2	Sub06	2/10/2008
General Water Quality Indicators						
Alkalinity-Total as CaCO3 (mg/L)	6.0	Sub11	6/23/2008	352	CHR05	10/17/2007
Anion/Cation Balance (± 5) (%)	-16.2	Sub07	6/23/2008	10.9	Sub11	3/24/2008
Conductivity @ 25 C (umhos/cm)	68.7	Sub11	3/24/2008	7640	Sub06	2/10/2008
pH	3.19	Sub06	2/10/2008	9.37	Sub08	9/26/2007
Sodium Adsorption Ratio (meq/L)	0.13	Sub07	3/24/2008	15	CHR01	11/19/2007
Solids-Total Dissolved TDS (mg/L)	90	Sub11	3/24/2008	8600	Sub06	11/27/2007

POWERTECH (USA) INC.

	Minimum at or above PQL			Maximum at or above PQL		
Constituent, Unit	Concentration	Site ID	Collection Date	Concentration	Site ID	Collection Date
Solids-Total Dissolved Calculated (mg/L)	42	Sub11	3/24/2008	8910	Sub06	2/10/2008
TDS Balance (0.80 - 1.20) (dec.%)	0.77	Sub06	2/10/2008	6.05	Sub01	6/18/2008
Solids-Suspended Sediment SSC (mg/L)	5.0	CHR01	4/16/2008	7040	CHR05	10/17/2007
Solids-Total Suspended TSS (mg/L)	5.0	Sub02	6/18/2008	4900	CHR05	5/26/2008
Metals, Dissolved						
Aluminum-Dissolved (mg/L)	0.10	Sub07	6/23/2008	162	Sub06	2/10/2008
Arsenic-Dissolved (mg/L)	0.001	Sub11	6/23/2008	0.004	Sub06	2/10/2008
Barium-Dissolved (mg/L)	0.10	BVC01	6/17/2008	0.10	BVC01	6/17/2008
Boron-Dissolved (mg/L)	0.10	Sub09	6/23/2008	0.70	Sub24	2/12/2008
Cadmium-Dissolved (mg/L)	0.008	Sub04	11/12/2007	0.036	Sub06	2/10/2008
Chromium-Dissolved (mg/L)	0.010	Sub06	6/23/2008	0.010	Sub06	6/23/2008
Copper-Dissolved (mg/L)	0.010	Sub07	9/27/2007	0.13	Sub06	2/10/2008
Iron-Dissolved (mg/L)	0.03	BVC01	6/17/2008	7.35	Sub06	2/10/2008
Lead-Dissolved (mg/L)	0.0010	Sub06	2/10/2008	0.004	Sub07	11/12/2007
Manganese-Dissolved (mg/L)	0.010	Sub08	6/23/2008	299	Sub06	2/10/2008
Mercury-Dissolved (mg/L)						
Molybdenum-Dissolved (mg/L)						
Nickel-Dissolved (mg/L)	0.01	BVC01	3/9/2008	6.45	Sub06	2/10/2008
Selenium-Dissolved (mg/L)	0.001	BVC04	3/9/2008	0.035	Sub06	9/27/2007
Selenium-IV-Dissolved (mg/L)	0.001	BVC04	3/9/2008	0.002	BVC01	5/26/2008
Selenium-VI-Dissolved (mg/L)	0.001	Sub02	6/18/2008	0.014	Sub06	11/27/2007
Silver-Dissolved (mg/L)						
Thorium 232-Dissolved (mg/L)	0.01	Sub06	11/27/2007	0.013	Sub06	2/10/2008
Uranium-Dissolved (mg/L)	0.0003	Sub01	6/18/2008	7.84	Sub06	2/10/2008
Vanadium-Dissolved (mg/L)						
Zinc-Dissolved (mg/L)	0.01	Sub10	6/23/2008	6.58	Sub06	2/10/2008
Metals, Suspended						
Thorium 232-Suspended (mg/L)	0.001	Sub09	3/24/2008	0.035	CHR05	5/26/2008

POWERTECH (USA) INC.

	Minimum at or above PQL			Maximum at or above PQL		
Constituent, Unit	Concentration	Site ID	Collection Date	Concentration	Site ID	Collection Date
Uranium-Suspended (mg/L)	0.0003	Sub09	3/24/2008	0.0067	CHR05	5/26/2008
Metals, Total						
Aluminum-Total (mg/L)	0.10	Sub24	2/12/2008	170.0	CHR05	5/26/2008
Arsenic-Total (mg/L)	0.001	Sub04	6/17/2008	0.0480	BVC01	5/26/2008
Barium-Total (mg/L)	0.10	Sub10	6/23/2008	1.10	BVC01	5/26/2008
Boron-Total (mg/L)	0.10	Sub10	6/23/2008	0.700	Sub08	2/10/2008
Cadmium-Total (mg/L)	0.008	Sub04	11/12/2007	0.031	Sub06	2/10/2008
Calcium-Total (mg/L)	6.7	Sub11	3/24/2008	627	Sub02	6/18/2008
Chromium-Total (mg/L)	0.05	Sub10	6/23/2008	0.190	CHR01	5/26/2008
Chromium-Hexavalent (mg/L)	0.005	Sub02	6/18/2008	0.020	Sub02	6/18/2008
Chromium-Trivalent (mg/L)	0.050	Sub10	6/23/2008	0.060	Sub01	6/18/2008
Copper-Total (mg/L)	0.01	Sub10	3/24/2008	0.140	Sub06	9/27/2007
Iron-Total (mg/L)	0.05	BVC01	11/19/2007	137.0	BVC01	5/26/2008
Lead-Total (mg/L)	0.001	Sub06	2/10/2008	0.118	CHR01	5/26/2008
Magnesium-Total (mg/L)	2.1	Sub11	3/24/2008	930	Sub06	2/10/2008
Manganese-Total (mg/L)	0.01	Sub02	6/18/2008	317	Sub06	2/10/2008
Mercury-Total (mg/L)						
Molybdenum-Total (mg/L)						
Nickel-Total (mg/L)	0.07	Sub07	3/24/2008	6.53	Sub06	9/27/2007
Potassium-Total (mg/L)	5.1	CHR05	2/12/2008	42.3	Sub10	3/24/2008
Selenium-Total (mg/L)	0.001	Sub02	6/18/2008	0.016	Sub06	2/10/2008
Selenium-IV-Total (mg/L)	0.001	BVC04	3/9/2008	0.001	BVC04	3/9/2008
Selenium-VI-Total (mg/L)	0.001	Sub02	6/18/2008	0.016	Sub06	2/10/2008
Silica-Total (mg/L)	0.8	Sub08	6/23/2008	104	Sub01	3/24/2008
Silver-Total (mg/L)						
Sodium-Total (mg/L)	1.90	Sub11	3/24/2008	1180	CHR01	9/26/2007
Thorium 232-Total (mg/L)	0.005	Sub06	6/23/2008	0.046	CHR01	5/26/2008
Uranium-Total (mg/L)	0.0003	Sub07	3/24/2008	7.38	Sub06	9/27/2007

POWERTECH (USA) INC.

Constituent, Unit	Minimum at or above PQL			Maximum at or above PQL		
	Concentration	Site ID	Collection Date	Concentration	Site ID	Collection Date
Vanadium-Total (mg/L)	0.10	Sub10	6/23/2008	0.40	BVC01	5/26/2008
Zinc-Total (mg/L)	0.01	Sub10	3/24/2008	7.22	Sub06	2/10/2008
Radionuclides						
Lead 210-Dissolved (pCi/L)	-3.0	Sub03	6/18/2008	26.0	BVC04	12/11/2007
Lead 210-Suspended (pCi/L)	-30	BVC04	5/26/2008	22.0	CHR05	1/11/2008
Lead 210-Total (pCi/L)	-3.8	Sub03	6/18/2008	35.0	BVC04	12/11/2007
Polonium 210-Dissolved (pCi/L)	-0.30	CHR05	5/26/2008	3.0	BVC04	10/17/2007
Polonium 210-Suspended (pCi/L)	0.20	Sub08	6/23/2008	4.5	Sub06	9/27/2007
Polonium 210-Total (pCi/L)	0.10	Sub02	6/18/2008	4.6	CHR01	5/26/2008
Radium 226-Dissolved (pCi/L)	-0.10	Sub11	6/23/2008	4.5	Sub03	11/12/2007
Radium 226-Suspended (pCi/L)	-0.90	CHR01	6/17/2008	4.0	CHR01	5/26/2008
Radium 226-Total (pCi/L)	-0.95	BVC01	6/17/2008	5.10	BVC01	5/26/2008
Thorium 230-Dissolved (pCi/L)	0.0	Sub11	6/23/2008	27.8	Sub06	11/27/2007
Thorium 230-Suspended (pCi/L)	-0.1	CHR05	6/17/2008	3.8	CHR01	11/19/2007
Thorium 230-Total (pCi/L)	-0.04	CHR05	6/17/2008	31.1	Sub06	2/10/2008
Gross Alpha-Total (pCi/L)	1.20	Sub09	3/24/2008	8750	Sub06	2/10/2008
Gross Beta-Total (pCi/L)	-27	BVC01	4/14/2008	3600	Sub06	2/10/2008
Gross Gamma-Total (pCi/L)	0.0	Sub10	6/23/2008	1310	BVC01	12/11/2007

POWERTECH (USA) INC.

APPENDIX 2.7-E

PERCENT DETECTIONS BY CONSTITUENT COMPARISON BETWEEN STREAMS AND SUBIMPOUNDMENTS

POWERTECH (USA) INC.

Appendix 2.7-E
Percent Detections by Constituent Comparison between Streams and Subimpoundments

Constituent, Unit	Streams			Subimpoundments			Total		
	Samples	Detects	Percent Detected	Samples	Detects	Percent Detected	Samples	Detects	Absolute difference in percent detects from streams and impoundments
Microbiological									
Bacteria, Fecal Coliform (cfu/100ml)	49	39	80%	32	12	38%	81	51	42%
Major Anions and Cations									
Anions (meq/L)	49	49	100%	32	32	100%	81	81	0%
Bicarbonate as HCO3 (mg/L)	49	49	100%	32	21	66%	81	70	34%
Carbonate as CO3 (mg/L)	49	0	0%	32	1	3%	81	1	3%
Sulfate (mg/L)	49	49	100%	32	32	100%	81	81	0%
Chloride (mg/L)	50	50	100%	32	31	97%	82	81	3%
Fluoride (mg/L)	49	43	88%	32	32	100%	81	75	12%
Nitrogen, Nitrate as N (mg/L)	49	21	43%	32	15	47%	81	36	4%
Cations (meq/L)	49	49	100%	32	32	100%	81	81	0%
Ammonia (mg/L)	34	1	3%	27	15	56%	61	16	53%
Sodium-Dissolved (mg/L)	35	35	100%	31	31	100%	66	66	0%
Calcium-Dissolved (mg/L)	35	35	100%	31	31	100%	66	66	0%
Magnesium-Dissolved (mg/L)	35	35	100%	31	31	100%	66	66	0%
Potassium-Dissolved (mg/L)	35	35	100%	31	31	100%	66	66	0%
Silica-Dissolved (mg/L)	35	34	97%	31	25	81%	66	59	16%
General Water Quality Indicators									
Alkalinity-Total as CaCO3 (mg/L)	49	49	100%	32	21	66%	81	70	34%
Anion/Cation Balance (± 5) (%)	49	49	100%	32	32	100%	81	81	0%
Conductivity @ 25 C (umhos/cm)	49	49	100%	32	32	100%	81	81	0%

POWERTECH (USA) INC.

Constituent, Unit	Streams			Subimpoundments			Total		
	Samples	Detects	Percent Detected	Samples	Detects	Percent Detected	Samples	Detects	Absolute difference in percent detects from streams and impoundments
pH	49	49	100%	32	32	100%	81	81	0%
Sodium Adsorption Ratio (meq/L)	34	34	100%	27	24	89%	61	58	11%
Solids-Total Dissolved TDS (mg/L)	49	49	100%	32	32	100%	81	81	0%
Solids-Total Dissolved Calculated (mg/L)	49	49	100%	32	32	100%	81	81	0%
TDS Balance (0.80 - 1.20) (dec.%)	49	49	100%	32	32	100%	81	81	0%
Solids-Suspended Sediment (mg/L)	49	48	98%	32	22	69%	81	70	29%
Solids-Total Suspended TSS (mg/L)	49	47	96%	32	26	81%	81	73	15%
Metals, Dissolved									
Aluminum-Dissolved (mg/L)	35	0	0%	31	19	61%	66	19	61%
Arsenic-Dissolved (mg/L)	35	11	31%	31	16	52%	66	27	20%
Barium-Dissolved (mg/L)	35	1	3%	31	0	0%	66	1	3%
Boron-Dissolved (mg/L)	35	34	97%	31	18	58%	66	52	39%
Cadmium-Dissolved (mg/L)	35	0	0%	31	5	16%	66	5	16%
Chromium-Dissolved (mg/L)	35	0	0%	31	1	3%	66	1	3%
Copper-Dissolved (mg/L)	35	0	0%	31	5	16%	66	5	16%
Iron-Dissolved (mg/L)	35	9	26%	31	27	87%	66	36	61%
Lead-Dissolved (mg/L)	35	0	0%	31	6	19%	66	6	19%
Manganese-Dissolved (mg/L)	35	31	89%	31	25	81%	66	56	8%
Nickel-Dissolved (mg/L)	35	3	9%	31	13	42%	66	16	33%
Selenium-Dissolved (mg/L)	35	13	37%	31	7	23%	66	20	15%
Selenium-IV-Dissolved (mg/L)	34	2	6%	27	0	0%	61	2	6%
Selenium-VI-Dissolved (mg/L)	34	9	26%	27	6	22%	61	15	4%
Thorium 232-Dissolved (mg/L)	35	0	0%	31	3	10%	66	3	10%
Uranium-Dissolved (mg/L)	38	38	100%	32	28	88%	70	66	13%
Zinc-Dissolved (mg/L)	35	2	6%	31	20	65%	66	22	59%

POWERTECH (USA) INC.

Constituent, Unit	Streams			Subimpoundments			Total		
	Samples	Detects	Percent Detected	Samples	Detects	Percent Detected	Samples	Detects	Absolute difference in percent detects from streams and impoundments
Metals, Suspended									
Thorium 232-Suspended (mg/L)	49	8	16%	32	7	22%	81	15	6%
Uranium-Suspended (mg/L)	49	20	41%	32	17	53%	81	37	12%
Metals, Total									
Aluminum-Total (mg/L)	35	30	86%	31	23	74%	66	53	12%
Arsenic-Total (mg/L)	49	39	80%	32	21	66%	81	60	14%
Barium-Total (mg/L)	49	10	20%	32	4	13%	81	14	8%
Boron-Total (mg/L)	49	44	90%	32	19	59%	81	63	30%
Cadmium-Total (mg/L)	49	0	0%	32	5	16%	81	5	16%
Calcium-Total (mg/L)	36	36	100%	21	21	100%	57	57	0%
Chromium-Total (mg/L)	49	4	8%	32	3	9%	81	7	1%
Chromium-Hexavalent (mg/L)	35	2	6%	31	4	13%	66	6	7%
Chromium-Trivalent (mg/L)	35	0	0%	31	3	10%	66	3	10%
Copper-Total (mg/L)	49	5	10%	32	11	34%	81	16	24%
Iron-Total (mg/L)	49	49	100%	32	31	97%	81	80	3%
Lead-Total (mg/L)	49	20	41%	32	17	53%	81	37	12%
Magnesium-Total (mg/L)	36	36	100%	21	21	100%	57	57	0%
Manganese-Total (mg/L)	49	49	100%	32	31	97%	81	80	3%
Nickel-Total (mg/L)	49	4	8%	32	10	31%	81	14	23%
Potassium-Total (mg/L)	36	36	100%	21	21	100%	57	57	0%
Selenium-Total (mg/L)	49	27	55%	32	14	44%	81	41	11%
Selenium-IV-Total (mg/L)	35	1	3%	31	1	3%	66	2	0%
Selenium-VI-Total (mg/L)	35	11	31%	31	12	39%	66	23	7%
Silica-Total (mg/L)	36	36	100%	21	18	86%	57	54	14%
Sodium-Total (mg/L)	36	36	100%	21	21	100%	57	57	0%

POWERTECH (USA) INC.

Constituent, Unit	Streams			Subimpoundments			Total		
	Samples	Detects	Percent Detected	Samples	Detects	Percent Detected	Samples	Detects	Absolute difference in percent detects from streams and impoundments
Thorium 232-Total (mg/L)	41	5	12%	32	7	22%	73	12	10%
Uranium-Total (mg/L)	49	49	100%	32	30	94%	81	79	6%
Vanadium-Total (mg/L)	49	4	8%	32	7	22%	81	11	14%
Zinc-Total (mg/L)	49	19	39%	32	22	69%	81	41	30%
Radionuclides									
Lead 210-Dissolved (pCi/L)	23	11	48%	23	12	52%	46	23	4%
Lead 210-Suspended (pCi/L)	23	9	39%	23	12	52%	46	21	13%
Lead 210-Total (pCi/L)	18	11	61%	19	12	63%	37	23	2%
Polonium 210-Dissolved (pCi/L)	23	15	65%	23	15	65%	46	30	0%
Polonium 210-Suspended (pCi/L)	23	12	52%	23	15	65%	46	27	13%
Polonium 210-Total (pCi/L)	18	14	78%	19	18	95%	37	32	17%
Radium 226-Dissolved (pCi/L)	34	21	62%	29	27	93%	63	48	31%
Radium 226-Suspended (pCi/L)	38	22	58%	32	18	56%	70	40	2%
Radium 226-Total (pCi/L)	45	25	56%	28	26	93%	73	51	37%
Thorium 230-Dissolved (pCi/L)	38	20	53%	32	23	72%	70	43	19%
Thorium 230-Suspended (pCi/L)	38	23	61%	32	24	75%	70	47	14%
Thorium 230-Total (pCi/L)	33	20	61%	28	21	75%	61	41	14%
Gross Alpha-Total (pCi/L)	49	49	100%	32	31	97%	81	80	3%
Gross Beta-Total (pCi/L)	49	45	92%	32	32	100%	81	77	8%
Gross Gamma-Total (pCi/L)	35	20	57%	31	17	55%	66	37	2%

POWERTECH (USA) INC.

APPENDIX 2.7-F

SURFACE WATER QUALITY DATA

POWERTECH (USA) INC.

Appendix 2.7-F
Water Quality Data from CHR01

CHR01											
Parameters	7/31/2007	9/5/2007*	9/5/2007*	9/26/2007	10/17/2007	11/19/2007	3/9/2008	4/16/2008	5/26/2008	6/17/2008	Average
A/C Balance (± 5) (%)	0.0317	-2.1	-2.45	-4.68	-0.301	-0.593	-4.49	-1.81	1.47	6.05	-0.89
Alkalinity-Total as CaCO3 (mg/L)	310	196	198	248	320	322	92	248	80	272	229
Aluminum-Dissolved (mg/L)					0.05	0.05	0.05	0.05	0.05	0.05	0.05
Aluminum-Total (mg/L)					0.6	0.1	8.4	0.05	94.7	5.1	18.2
Ammonia (mg/L)					0.05	0.05	0.05	0.05	0.05	0.05	0.05
Anions (meq/L)	83.7	47.9	49	91.5	95.6	105	20.8	86.1	3.51	30.3	61.3
Arsenic-Dissolved (mg/L)					0.001	0.0005	0.0005	0.001	0.0005	0.001	0.0008
Arsenic-Total (mg/L)	0.001	0.002	0.002	0.002	0.002	0.0005	0.004	0.001	0.024	0.003	0.0042
Bacteria, Fecal Coliform (cfu/100ml)	8	160	150	76	4	1	20	1	2100	16	254
Barium-Dissolved (mg/L)					0.05	0.05	0.05	0.05	0.05	0.05	0.05
Barium-Total (mg/L)	0.05	0.05	0.05	0.05	0.05	0.05	0.05	0.05	0.8	0.1	0.13
Bicarbonate as HCO3 (mg/L)	378	234	236	302	390	393	112	302	98	332	278
Boron-Dissolved (mg/L)					0.3	0.2	0.1	0.3	0.1	0.2	0.20
Boron-Total (mg/L)	0.4	0.6	0.61	0.34	0.2	0.2	0.05	0.2	0.05	0.2	0.29
Cadmium-Dissolved (mg/L)					0.0025	0.0025	0.0025	0.0025	0.0025	0.0025	0.0025
Cadmium-Total (mg/L)	0.0025	0.0025	0.0025	0.0025	0.0025	0.0025	0.0025	0.0025	0.0025	0.0025	0.0025
Calcium-Dissolved (mg/L)					398	411	155	370	29.7	161	254
Calcium-Total (mg/L)	366	186	191	344			160	366	62	175	231
Carbonate as CO3 (mg/L)	2.5	2.5	2.5	2.5	2.5	2.5	2.5	2.5	2.5	2.5	2.5
Cations (meq/L)	83.8	45.9	46.7	83.3	95	104	19	83.1	3.61	34.2	59.9
Chloride (mg/L)	125	74	74	138	166	176	249	156	2	78	124
Chromium-Dissolved (mg/L)					0.005	0.005	0.005	0.005	0.005	0.005	0.005
Chromium-Hexavalent (mg/L)					0.0025	0.0025	0.0025	0.0025	0.0025	0.0025	0.0025
Chromium-Total (mg/L)	0.025	0.025	0.025	0.025	0.025	0.025	0.025	0.025	0.19	0.025	0.042
Chromium-Trivalent (mg/L)					0.005	0.005	0.005	0.005	0.005	0.005	0.005
Conductivity @ 25 C (umhos/cm)	6580	3990	4030	6450	6940	7530	1860	6600	367	2770	4712
Copper-Dissolved (mg/L)					0.005	0.005	0.005	0.005	0.005	0.005	0.005

POWERTECH (USA) INC.

CHR01											
Parameters	7/31/2007	9/5/2007*	9/5/2007*	9/26/2007	10/17/2007	11/19/2007	3/9/2008	4/16/2008	5/26/2008	6/17/2008	Average
Copper-Total (mg/L)	0.005	0.005	0.005	0.005	0.005	0.005	0.01	0.005	0.1	0.005	0.015
Fluoride (mg/L)	0.3	0.4	0.4	0.1	0.3	0.3	0.4	0.05	0.4	0.7	0.3
Gross Alpha-Total (pCi/L)	16.9	15.9	16.7	33.8	34.2	27	5.1	5.7	29.1	35.3	22.0
Gross Beta-Total (pCi/L)	21.9	18.6	1	21.9	21.3	1	4.8	-9.2	22.1	15.5	11.9
Gross Gamma-Total (pCi/L)					1070	10	10	0	0	0	182
Iron-Dissolved (mg/L)					0.03	0.06	0.015	0.015	0.05	0.015	0.031
Iron-Total (mg/L)	0.15	0.66	0.71	1.1	0.95	0.61	9.12	0.49	88.3	2.99	10.51
Lead 210-Dissolved (pCi/L)				0.5	3.2	0.5			0.5		1.2
Lead 210-Suspended (pCi/L)				0.5	0.5	0.5			4.4		1.5
Lead 210-Total (pCi/L)				0.5		0.5			5		2.0
Lead-Dissolved (mg/L)					0.0005	0.0005	0.0005	0.0005	0.0005	0.0005	0.0005
Lead-Total (mg/L)	0.0005	0.001	0.001	0.0005	0.0005	0.0005	0.008	0.0005	0.118	0.003	0.0134
Magnesium-Dissolved (mg/L)					189	201	36	175	9	65.8	113
Magnesium-Total (mg/L)	188	92	94	172			38.4	171	37.3	70.5	108
Manganese-Dissolved (mg/L)					2.75	3.01	0.05	0.68	0.005	0.04	1.09
Manganese-Total (mg/L)	1.13	0.2	0.21	0.25	2.94	2.66	0.33	0.68	1.19	0.38	1.00
Mercury-Dissolved (mg/L)					0.0005	0.0005	0.0005	0.0005	0.0005	0.0005	0.0005
Mercury-Total (mg/L)	0.0005	0.0005	0.0005	0.0005	0.0005	0.0005	0.00055	0.00055	0.00005	0.00005	0.0004
Molybdenum-Dissolved (mg/L)					0.05	0.05	0.05	0.05	0.05	0.05	0.05
Molybdenum-Total (mg/L)	0.05	0.05	0.05	0.05	0.05	0.05	0.05	0.05	0.05	0.05	0.05
Nickel-Dissolved (mg/L)					0.005	0.005	0.005	0.005	0.005	0.005	0.005
Nickel-Total (mg/L)	0.025	0.025	0.025	0.025	0.025	0.025	0.025	0.025	0.08	0.025	0.031
Nitrogen, Nitrate as N (mg/L)	0.05	0.05	0.05	0.05	0.05	0.05	0.4	0.05	0.4	0.05	0.12
pH	7.83	8.3	8.26	8.2	7.57	7.63	7.78	8.03	7.81	8.29	7.97
Polonium 210-Dissolved (pCi/L)				0.5	1.6	1.7			0.5		1.1
Polonium 210-Suspended (pCi/L)				0.5	0.5	2.3			4.1		1.9
Polonium 210-Total (pCi/L)				0.5		4			4.6		3.0
Potassium-Dissolved (mg/L)					15	15	5	26	6	12	13
Potassium-Total (mg/L)	19	15	15	17			6.7	22.1	27.4	13.2	16.9
Radium 226-Dissolved (pCi/L)				0.1	0.5		0.2	0.3	0.06	0.2	0.2

POWERTECH (USA) INC.

CHR01											
Parameters	7/31/2007	9/5/2007*	9/5/2007*	9/26/2007	10/17/2007	11/19/2007	3/9/2008	4/16/2008	5/26/2008	6/17/2008	Average
Radium 226-Suspended (pCi/L)				0.1	0.1	0.6	1.2	-0.1	4	-0.9	0.7
Radium 226-Total (pCi/L)	0.1	0.1	0.1	0.1		0.6	1.5	0.1	4.1	-0.72	0.7
Selenium-Dissolved (mg/L)					0.0005	0.0005	0.0005	0.0005	0.0025	0.0005	0.0008
Selenium-IV-Dissolved (mg/L)					0.0005	0.0005	0.0005	0.0005	0.0005	0.0005	0.0005
Selenium-IV-Total (mg/L)					0.0005	0.0005	0.0005	0.0005	0.0005	0.0005	0.0005
Selenium-Total (mg/L)	0.002	0.002	0.002	0.003	0.0005	0.0005	0.001	0.0005	0.0005	0.0005	0.0013
Selenium-VI-Dissolved (mg/L)					0.0005	0.0005	0.0005	0.0005	0.0005	0.0005	0.0005
Selenium-VI-Total (mg/L)					0.0005	0.0005	0.0005	0.0005	0.0005	0.0005	0.0005
Silica-Dissolved (mg/L)					13	12.4	5.6	6.4	2.6	6.1	7.7
Silica-Total (mg/L)	7.2	7.8	8.1	8.6			45.4	6.3	63.5	18.1	20.6
Silver-Dissolved (mg/L)					0.0025	0.0025	0.0025	0.0025	0.0025	0.0025	0.0025
Silver-Total (mg/L)	0.0025	0.0025	0.0025	0.0025	0.0025	0.0025	0.0025	0.0025	0.0025	0.0025	0.0025
Sodium Adsorption Ratio (SAR) (meq/L)					14	15	3.5	12	1.2	7.9	8.93
Sodium-Dissolved (mg/L)					1360	1530	189	1140	28	471	786
Sodium-Total (mg/L)	1140	657	665	1180			191	1140	30	509	689
Solids-Suspended Sediment SSC (mg/L)	53	49	56	34	6170	10	424	5	4840	102	1174
Solids-Total Dissolved Calculated (mg/L)	5590	3160	3230	5970	6370	7040	1280	5720	219	2060	4064
Solids-Total Dissolved TDS (mg/L)	5900	3200	3200	5900	6500	7100	1300	5700	400	2200	4140
Solids-Total Suspended TSS (mg/L)	54	54	57	35	12	8	400	8	4400	110	514
Sulfate (mg/L)	3550	2010	2060	3970	4060	4520	572	3690	86	1090	2561
TDS Balance (0.80 - 1.20) (dec.%)	1.06	1.02	0.99	0.98	1.03	1	0.98	0.99	1.84	1.07	1.10
Thorium 230-Dissolved (pCi/L)				0.1	0.1	0.1	0.1	0.3	0.1	0	0.114
Thorium 230-Suspended (pCi/L)				0.1	0.9	3.8	0.8	0.2	2	0	1.1
Thorium 230-Total (pCi/L)				0.1		3.8	0.8	0.5	2.1	0.08	1.2
Thorium 232-Dissolved (pCi/L)					0.0025	0.0025	0.0025	0.0025	0.0025	0.0025	0.0025
Thorium 232-Suspended (mg/L)	0.0005	0.0005	0.0005	0.0005	0.0005	0.0005	0.005	0.0005	0.017	0.0005	0.0026
Thorium 232-Total (mg/L)		0.0025	0.0025	0.0025	0.0025	0.0025	0.0025	0.0025	0.046	0.0025	0.007
Uranium-Dissolved (mg/L)				0.0149	0.0308	0.031	0.0034	0.0324	0.0024	0.0177	0.019
Uranium-Suspended (mg/L)	0.00015	0.0012	0.0012	0.00015	0.00015	0.0006	0.002	0.0006	0.0038	0.00015	0.0010
Uranium-Total (mg/L)	0.0223	0.0142	0.0142	0.015	0.032	0.0316	0.0043	0.0365	0.0119	0.0214	0.020

POWERTECH (USA) INC.

CHR01											
Parameters	7/31/2007	9/5/2007*	9/5/2007*	9/26/2007	10/17/2007	11/19/2007	3/9/2008	4/16/2008	5/26/2008	6/17/2008	Average
Vanadium-Dissolved (mg/L)					0.05	0.05	0.05	0.05	0.05	0.05	0.05
Vanadium-Total (mg/L)	0.05	0.05	0.05	0.05	0.05	0.05	0.05	0.05	0.3	0.05	0.08
Zinc-Dissolved (mg/L)					0.005	0.02	0.005	0.005	0.005	0.005	0.008
Zinc-Total (mg/L)	0.005	0.005	0.005	0.005	0.005	0.02	0.05	0.005	0.46	0.02	0.058

* Replicate

POWERTECH (USA) INC.

Water Quality Data from CHR05

	CHR05													
Parameters	7/31/2007	9/5/2007	9/26/2007	10/17/2007	11/19/2007	12/11/2007	1/11/2008	2/12/2008	3/9/2008	4/14/2008*	4/14/2008*	5/26/2008	6/17/2008	Average
A/C Balance (± 5) (%)	1.77	-3.85	-0.328	0.765	-1.58	-3.9	2.85	-5.77	2.67	-1.29	-3.76	-9.14	5.94	-1.20
Alkalinity-Total as CaCO3 (mg/L)	200	214	324	352	180	182	234	246	92	164	168	90	224	205
Aluminum-Dissolved (mg/L)				0.05	0.05	0.05	0.05	0.05	0.05	0.05	0.05	0.05	0.05	0.05
Aluminum-Total (mg/L)				0.2	0.1	0.05	0.05	0.05	8.8	0.4	0.4	170	5.3	18.5
Ammonia (mg/L)				0.05	0.05	0.05	0.05	0.1	0.05	0.05	0.05	0.05	0.05	0.06
Anions (meq/L)	57.1	59	88.4	99.1	78	50.6	45.6	48.1	18.1	57.4	63.4	6.07	38.6	54.6
Arsenic-Dissolved (mg/L)				0.0005	0.0005	0.0005	0.0005	0.0005	0.0005	0.0005	0.0005	0.0005	0.001	0.0006
Arsenic-Total (mg/L)	0.001	0.001	0.001	0.001	0.001	0.0005	0.0005	0.0005	0.003	0.002	0.002	0.029	0.004	0.0036
Bacteria, Fecal Coliform (cfu/100ml)	180	290	8	200	26	6	2	1	32	1	1	3500	28	329
Barium-Dissolved (mg/L)				0.05	0.05	0.05	0.05	0.05	0.05	0.05	0.05	0.05	0.05	0.05
Barium-Total (mg/L)	0.05	0.05	0.05	0.05	0.05	0.05	0.05	0.05	0.05	0.05	0.05	0.9	0.10	0.12
Bicarbonate as HCO3 (mg/L)	244	261	395	429	219	222	285	300	112	200	205	110	273	250
Boron-Dissolved (mg/L)				0.4	0.4	0.2	0.3	0.2	0.1	0.2	0.2	0.05	0.2	0.23
Boron-Total (mg/L)	0.4	0.54	0.39	0.3	0.3	0.2	0.2	0.2	0.1	0.2	0.2	0.1	0.3	0.26
Cadmium-Dissolved (mg/L)				0.0025	0.0025	0.0025	0.0025	0.0025	0.0025	0.0025	0.0025	0.0025	0.0025	0.0025
Cadmium-Total (mg/L)	0.0025	0.0025	0.0025	0.0025	0.0025	0.0025	0.0025	0.0025	0.0025	0.0025	0.0025	0.0025	0.0025	0.0025
Calcium-Dissolved (mg/L)				492	389	441	525	496	152	407	457	34.3	234	363
Calcium-Total (mg/L)	311	270	422				515	526	148	430	418	70.8	254	336
Carbonate as CO3 (mg/L)	2.5	2.5	2.5	2.5	2.5	2.5	2.5	2.5	2.5	2.5	2.5	2.5	2.5	2.5
Cations (meq/L)	59.2	54.6	87.8	101	75.6	46.8	48.2	42.9	19.1	55.9	58.8	5.05	43.5	53.7
Chloride (mg/L)	386	344	221	269	912	509	258	250	232	780	861	17	337	414
Chromium-Dissolved (mg/L)				0.005	0.005	0.005	0.005	0.025	0.005	0.005	0.005	0.005	0.005	0.007
Chromium-Hexavalent (mg/L)				0.0025	0.0025	0.0025	0.0025	0.0025	0.0025	0.0025	0.0025	0.009	0.0025	0.0032
Chromium-Total (mg/L)	0.025	0.025	0.025	0.025	0.025	0.025	0.025	0.025	0.025	0.025	0.025	0.19	0.025	0.038
Chromium-Trivalent (mg/L)				0.005	0.005	0.005	0.005	0.005	0.005	0.005	0.005	0.005	0.005	0.005
Conductivity @ 25 C (umhos/cm)	4980	4630	6590	6910	6090	4080	3510	3320	1810	5150	5150	537	3570	4333

POWERTECH (USA) INC.

CHR05														
Parameters	7/31/2007	9/5/2007	9/26/2007	10/17/2007	11/19/2007	12/11/2007	1/11/2008	2/12/2008	3/9/2008	4/14/2008*	4/14/2008*	5/26/2008	6/17/2008	Average
Copper-Dissolved (mg/L)				0.005	0.005	0.005	0.005	0.005	0.005	0.005	0.005	0.005	0.005	0.005
Copper-Total (mg/L)	0.005	0.005	0.005	0.005	0.005	0.005	0.005	0.005	0.005	0.005	0.005	0.100	0.005	0.012
Fluoride (mg/L)	0.5	0.4	0.2	0.3	0.4	0.4	0.4	0.5	0.4	0.05	1	0.4	0.5	0.4
Gross Alpha-Total (pCi/L)	16.7	9.7	25.6	23.2	16.8	24.9	19.3	15.7	4	19.8	19.9	29.8	29.9	19.6
Gross Beta-Total (pCi/L)	18.7	1	9.8	11.1	38	12.5	10.8	7.6	4.8	10.2	-0.1	22.4	-1.7	11.2
Gross Gamma-Total (pCi/L)				1140	967	10	10	10	10	0	0	40.1	0	219
Iron-Dissolved (mg/L)				0.15	0.015	0.015	0.015	0.015	0.015	0.015	0.015	0.05	0.015	0.032
Iron-Total (mg/L)	0.09	0.25	0.39	0.84	0.24	0.13	0.06	0.1	6.92	0.36	0.43	108	3.41	9.32
Lead 210-Dissolved (pCi/L)			0.5	6.6	0.5	5.9	0.5					0.7		2.5
Lead 210-Suspended (pCi/L)			0.5	3	0.5	0.5	22					11.2		6.3
Lead 210-Total (pCi/L)			0.5		0.5	5.9	22					12		8.2
Lead-Dissolved (mg/L)				0.0005	0.0005	0.0005	0.0005	0.0005	0.0005	0.0005	0.0005	0.0005	0.0005	0.0005
Lead-Total (mg/L)	0.0005	0.0005	0.0005	0.0005	0.0005	0.0005	0.0005	0.0005	0.006	0.0005	0.0005	0.11	0.002	0.0095
Magnesium-Dissolved (mg/L)				380	164	109	136	113	34.2	127	127	10.1	84.9	129
Magnesium-Total (mg/L)	168	151	330				132	115	35.3	138	134	44.8	92.4	134
Manganese-Dissolved (mg/L)				1.53	0.16	0.07	0.07	0.12	0.04	0.59	0.59	0.005	0.16	0.33
Manganese-Total (mg/L)	0.12	0.48	0.58	1.69	0.23	0.1	0.13	0.12	0.21	0.73	0.73	1.39	0.53	0.54
Mercury-Dissolved (mg/L)				0.0005	0.0005	0.0005	0.0005	0.0005	0.0005	0.0005	0.0005	0.0005	0.0005	0.0005
Mercury-Total (mg/L)	0.0005	0.0005	0.0005	0.0005	0.0005	0.0005	0.0005	0.0005	0.00055	0.0008	0.00055	0.00005	0.00005	0.0005
Molybdenum-Dissolved (mg/L)				0.05	0.05	0.05	0.05	0.05	0.05	0.05	0.05	0.05	0.05	0.05
Molybdenum-Total (mg/L)	0.05	0.05	0.05	0.05	0.05	0.05	0.05	0.05	0.05	0.05	0.05	0.05	0.05	0.05
Nickel-Dissolved (mg/L)				0.005	0.005	0.01	0.005	0.025	0.005	0.005	0.005	0.005	0.005	0.008
Nickel-Total (mg/L)	0.025	0.025	0.025	0.025	0.025	0.025	0.025	0.025	0.025	0.025	0.025	0.100	0.025	0.031
Nitrogen, Nitrate as N (mg/L)	0.05	0.05	0.05	0.05	0.05	0.3	0.4	0.6	0.5	0.05	0.05	0.4	0.05	0.2
pH	7.98	8.08	8.09	7.74	7.95	7.90	7.82	7.78	7.67	8.10	8.04	7.78	8.30	7.94
Polonium 210-Dissolved (pCi/L)			0.5	0.5	1.5	2.4	0.5					-0.3		0.9
Polonium 210-Suspended (pCi/L)			0.5	0.5	1.3	0.5	0.5					3.8		1.2
Polonium 210-Total (pCi/L)			0.5		2.8	3.4	0.5					3.5		2.1

POWERTECH (USA) INC.

CHR05														
Parameters	7/31/2007	9/5/2007	9/26/2007	10/17/2007	11/19/2007	12/11/2007	1/11/2008	2/12/2008	3/9/2008	4/14/2008*	4/14/2008*	5/26/2008	6/17/2008	Average
Potassium-Dissolved (mg/L)				18	12	6	7	5	6	8	8	6	10	9
Potassium-Total (mg/L)	13.3	14	19				6.2	5.1	6.9	8.4	9.6	31.5	11.7	12.6
Radium 226-Dissolved (pCi/L)			0.1	0.1		0.1	0.1	0.1	0.07	0.1	0.1	1.4	0.2	0.2
Radium 226-Suspended (pCi/L)			0.1	0.1	0.1	0.1	0.1	0.1	1.8	0.3	0.5	3.8	-0.7	0.6
Radium 226-Total (pCi/L)	0.1	0.1	0.1		0.1	0.1	0.1	0.1	1.8	0.4	0.5	5.1	-0.48	0.7
Selenium-Dissolved (mg/L)				0.0005	0.0005	0.002	0.003	0.002	0.002	0.0005	0.0005	0.0025	0.0005	0.0014
Selenium-IV-Dissolved (mg/L)				0.0005	0.0005	0.0005	0.0005	0.0005	0.0005	0.0005	0.0005	0.0005	0.0005	0.0005
Selenium-IV-Total (mg/L)				0.0005	0.0005	0.0005	0.0005	0.0005	0.0005	0.0005	0.0005	0.0005	0.0005	0.0005
Selenium-Total (mg/L)	0.001	0.002	0.003	0.0005	0.0005	0.001	0.003	0.003	0.002	0.0005	0.0005	0.0005	0.0005	0.0014
Selenium-VI-Dissolved (mg/L)				0.0005	0.0005	0.002	0.002	0.0005	0.0005	0.0005	0.0005	0.0005	0.0005	0.0008
Selenium-VI-Total (mg/L)				0.0005	0.0005	0.001	0.003	0.002	0.002	0.0005	0.0005	0.0005	0.0005	0.0011
Silica-Dissolved (mg/L)				10	4.4	10.4	14.1	14	5.6	3.4	3.4	2.9	4.7	7.3
Silica-Total (mg/L)	7.4	7.8	11				13.5	16.6	48.3	5.4	5.6	56.4	17.6	19.0
Silver-Dissolved (mg/L)				0.0025	0.0025	0.0025	0.0025	0.0025	0.0025	0.0025	0.0025	0.0025	0.0025	0.0025
Silver-Total (mg/L)	0.0025	0.0025	0.0025	0.0025	0.0025	0.0025	0.0025	0.0025	0.0025	0.0025	0.0025	0.0025	0.0025	0.0025
Sodium Adsorption Ratio (SAR) (meq/L)				8.4	10	4	2.5	2.1	3.8	6.3	6.2	2.1	8	5.34
Sodium-Dissolved (mg/L)				1020	974	360	245	200	197	572	580	54	564	477
Sodium-Total (mg/L)	678	652	897				248	196	196	634	630	58	601	479
Solids-Suspended Sediment SSC (mg/L)	7	6	18	7040	17	8	2.5	11	197	15	18	4840	91	944
Solids-Total Dissolved Calculated (mg/L)	3710	3730	5720	6450	4900	3100	2920	2950	1160	3540	3860	365	2560	3459
Solids-Total Dissolved TDS (mg/L)	4100	3700	6500	7200	5200	3300	3200	2900	1200	3700	3800	340	2800	3688
Solids-Total Suspended TSS (mg/L)	14	6	23	8	16	7	2.5	9	220	19	20	4900	95	411
Sulfate (mg/L)	2030	2160	4160	4060	2340	1570	1610	1730	463	1540	1710	180	1180	1903
TDS Balance (0.80 - 1.20) (dec.%)	1.1	1	1.13	1.11	1.06	1.07	1.1	1	1.04	1.06	0.99	0.94	1.07	1.05
Thorium 230-Dissolved (pCi/L)			0.1	0.1	0.1	0.1	0.1	0.2	0.1	0	0.1	0.1	0	0.091
Thorium 230-Suspended (pCi/L)			0.1	0.6	0.1	0.1	0.1	0.3	1.4	0.1	0.3	2.2	-0.1	0.5
Thorium 230-Total (pCi/L)			0.1		0.1	0.1	0.1	0.2	1.5	0.1	0.4	2.3	-0.04	0.5

POWERTECH (USA) INC.

CHR05														
Parameters	7/31/2007	9/5/2007	9/26/2007	10/17/2007	11/19/2007	12/11/2007	1/11/2008	2/12/2008	3/9/2008	4/14/2008*	4/14/2008*	5/26/2008	6/17/2008	Average
Thorium 232-Dissolved (pCi/L)				0.0025	0.0025	0.0025	0.0025	0.0025	0.0025	0.0025	0.0025	0.0025	0.0025	0.0025
Thorium 232-Suspended (mg/L)	0.0005	0.0005	0.0005	0.0005	0.0005	0.0005	0.0005	0.0005	0.003	0.0005	0.0005	0.035	0.0005	0.0033
Thorium 232-Total (mg/L)		0.0025	0.0025	0.0025	0.0025	0.0025	0.0025	0.0025	0.0025	0.0025	0.0025	0.046	0.0025	0.006
Uranium-Dissolved (mg/L)			0.0346	0.0368	0.0151	0.0125	0.015	0.0143	0.0039	0.0134	0.0135	0.0028	0.0139	0.016
Uranium-Suspended (mg/L)	0.00015	0.0003	0.00015	0.00015	0.00015	0.0004	0.00015	0.00015	0.0036	0.0005	0.00015	0.0067	0.00015	0.0010
Uranium-Total (mg/L)	0.011	0.0136	0.0348	0.0378	0.0143	0.0152	0.0158	0.0136	0.0043	0.0141	0.014	0.0122	0.0173	0.017
Vanadium-Dissolved (mg/L)				0.05	0.05	0.05	0.05	0.05	0.05	0.05	0.05	0.05	0.05	0.05
Vanadium-Total (mg/L)	0.05	0.05	0.05	0.05	0.05	0.05	0.05	0.05	0.05	0.05	0.05	0.3	0.05	0.07
Zinc-Dissolved (mg/L)				0.005	0.005	0.005	0.005	0.005	0.005	0.005	0.01	0.005	0.005	0.006
Zinc-Total (mg/L)	0.005	0.005	0.005	0.005	0.01	0.005	0.005	0.005	0.03	0.005	0.005	0.47	0.02	0.044

* Replicate

POWERTECH (USA) INC.

Water Quality Data from BVC01

BVC01													
Parameters	7/24/2007	8/20/2007	9/26/2007	10/17/2007	11/19/2007	12/11/2007*	12/11/2007*	1/11/2008	3/9/2008	4/14/2008	5/26/2008	6/17/2008	Average
A/C Balance (± 5) (%)	0.715	1.06	-4.61	-1.92	-2.71	0.412	-2.7	1.85	3.65	-3.44	0.05	4.51	-0.26
Alkalinity-Total as CaCO3 (mg/L)	134	112	78	112	196	188	184	214	214	160	84	156	153
Aluminum-Dissolved (mg/L)				0.05	0.05	0.05	0.05	0.05	0.05	0.05	0.05	0.05	0.05
Aluminum-Total (mg/L)				0.1	0.05	0.2	0.2	0.3	0.3	0.5	99.3	4.3	11.7
Ammonia (mg/L)				0.05	0.05	0.05	0.05	0.05	0.05	0.05	0.05	0.05	0.05
Anions (meq/L)	15.2	17.4	17.4	71.6	95.3	49.8	52.3	40.8	59.4	63.4	9.42	59.9	46.0
Arsenic-Dissolved (mg/L)				0.001	0.0005	0.002	0.001	0.0005	0.0005	0.0005	0.0005	0.001	0.0008
Arsenic-Total (mg/L)	0.002	0.002	0.002	0.001	0.0005	0.001	0.0005	0.0005	0.0005	0.002	0.048	0.004	0.0053
Bacteria, Fecal Coliform (cfu/100ml)	68	2500	1	76	30	6	14	16	1	1	5700	44	705
Barium-Dissolved (mg/L)				0.05	0.05	0.05	0.05	0.05	0.05	0.05	0.05	0.1	0.06
Barium-Total (mg/L)	0.05	0.05	0.05	0.05	0.05	0.05	0.05	0.05	0.05	0.05	1.1	0.1	0.14
Bicarbonate as HCO3 (mg/L)	163	137	85	137	239	229	224	261	261	195	102	190	185
Boron-Dissolved (mg/L)				0.3	0.6	0.2	0.2	0.2	0.2	0.3	0.2	0.4	0.29
Boron-Total (mg/L)	0.2	0.2	0.21	0.3	0.5	0.2	0.2	0.2	0.2	0.3	0.3	0.4	0.27
Cadmium-Dissolved (mg/L)				0.0025	0.0025	0.0025	0.0025	0.0025	0.0025	0.0025	0.0025	0.0025	0.0025
Cadmium-Total (mg/L)	0.0025	0.0025	0.0025	0.0025	0.0025	0.0025	0.0025	0.0025	0.0025	0.0025	0.0025	0.0025	0.0025
Calcium-Dissolved (mg/L)				314	379	452	451	499	308	425	75.5	358	362
Calcium-Total (mg/L)	68.4	73	53					506	295	381	132	362	234
Carbonate as CO3 (mg/L)	2.5	2.5	2.5	2.5	2.5	2.5	2.5	2.5	2.5	2.5	2.5	2.5	2.5
Cations (meq/L)	15.4	17.8	15.9	68.9	90.3	50.3	49.6	42.3	63.9	59.2	9.43	65.6	45.7
Chloride (mg/L)	101	158	141	852	1370	581	610	208	113	973	62	970	512
Chromium-Dissolved (mg/L)				0.005	0.005	0.005	0.005	0.005	0.005	0.005	0.005	0.005	0.005
Chromium-Hexavalent (mg/L)				0.0025	0.0025	0.0025	0.0025	0.0025	0.0025	0.0025	0.0025	0.0025	0.0025
Chromium-Total (mg/L)	0.025	0.025	0.025	0.025	0.025	0.025	0.025	0.025	0.025	0.025	0.19	0.025	0.039

POWERTECH (USA) INC.

BVC01													
Parameters	***7/24/2007***	***8/20/2007***	***9/26/2007***	***10/17/2007***	***11/19/2007***	***12/11/2007****	***12/11/2007****	***1/11/2008***	***3/9/2008***	***4/14/2008***	***5/26/2008***	***6/17/2008***	**Average**
Chromium-Trivalent (mg/L)				0.005	0.005	0.005	0.005	0.005	0.005	0.005	0.005	0.005	0.005
Conductivity @ 25 C (umhos/cm)	1480	1660	1740	5750	7290	4370	4380	3140	5000	5340	908	5140	3850
Copper-Dissolved (mg/L)				0.005	0.005	0.005	0.005	0.005	0.005	0.005	0.005	0.005	0.005
Copper-Total (mg/L)	0.005	0.005	0.005	0.005	0.005	0.005	0.005	0.005	0.005	0.005	0.11	0.005	0.014
Fluoride (mg/L)	0.7	0.6	0.9	0.5	0.2	0.3	0.4	0.4	0.2	0.05	0.5	0.6	0.4
Gross Alpha-Total (pCi/L)	5.9	7.1	6.6	12	65.8	27.9	25.8	12.6	17.4	15.1	18.2	8.9	18.6
Gross Beta-Total (pCi/L)	10.3	14.7	9.4	2.7	44.4	14.9	5.7	4.1	12.5	-27.1	12.7	-11.1	7.8
Gross Gamma-Total (pCi/L)				10	10	1310	1120	10	10	0	0	0	274
Iron-Dissolved (mg/L)				0.015	0.18	0.015	0.015	0.015	0.015	0.015	0.015	0.03	0.035
Iron-Total (mg/L)	0.48	0.66	0.61	0.13	0.05	0.25	0.28	0.29	0.44	0.52	137	3.02	12.0
Lead 210-Dissolved (pCi/L)			0.5	0.5	4.6	11	0.5	0.5			-1		2.4
Lead 210-Suspended (pCi/L)			0.5	0.5	0.5	3	4.4	0.5			15.3		3.5
Lead 210-Total (pCi/L)			0.5		4.6	14	4.4	0.5			14		6.3
Lead-Dissolved (mg/L)				0.0005	0.0005	0.0005	0.0005	0.0005	0.0005	0.0005	0.0005	0.0005	0.0005
Lead-Total (mg/L)	0.0005	0.001	0.0005	0.0005	0.0005	0.0005	0.0005	0.0005	0.0005	0.0005	0.088	0.002	0.0080
Magnesium-Dissolved (mg/L)				141	209	110	109	114	129	127	17.2	124	120
Magnesium-Total (mg/L)	29.5	27.8	28					121	127	128	59.8	130	81
Manganese-Dissolved (mg/L)				0.08	0.23	0.06	0.06	0.05	0.32	0.83	0.005	0.73	0.26
Manganese-Total (mg/L)	0.15	0.11	0.2	0.16	0.18	0.08	0.09	0.09	0.36	0.98	1.82	0.97	0.43
Mercury-Dissolved (mg/L)				0.0005	0.0005	0.0005	0.0005	0.0005	0.0005	0.0005	0.0005	0.0005	0.0005
Mercury-Total (mg/L)	0.0005	0.0005	0.0005	0.0005	0.0005	0.0005	0.0005	0.0005	0.00055	0.00055	0.00005	0.00005	0.0004
Molybdenum-Dissolved (mg/L)				0.05	0.05	0.05	0.05	0.05	0.05	0.05	0.05	0.05	0.05
Molybdenum-Total (mg/L)	0.05	0.05	0.05	0.05	0.05	0.05	0.05	0.05	0.05	0.05	0.05	0.05	0.05
Nickel-Dissolved (mg/L)				0.005	0.005	0.005	0.01	0.005	0.01	0.005	0.005	0.005	0.006
Nickel-Total (mg/L)	0.025	0.025	0.025	0.025	0.025	0.025	0.025	0.025	0.025	0.025	0.15	0.025	0.035
Nitrogen, Nitrate as N (mg/L)	0.05	0.1	0.05	0.05	0.05	0.3	0.3	0.4	0.05	0.05	0.6	0.05	0.17
pH	8.31	8.8	8.79	7.84	7.77	7.88	7.89	7.68	8.1	8.09	7.69	8.13	8.08

POWERTECH (USA) INC.

BVC01													
Parameters	7/24/2007	8/20/2007	9/26/2007	10/17/2007	11/19/2007	12/11/2007*	12/11/2007*	1/11/2008	3/9/2008	4/14/2008	5/26/2008	6/17/2008	Average
Polonium 210-Dissolved (pCi/L)			0.5	2.6	1.9	1	1.4	0.5			0.3		1.2
Polonium 210-Suspended (pCi/L)			0.5	0.5	2.5	1.6	1.2	1.4			3		1.5
Polonium 210-Total (pCi/L)			0.5		4.4	2.6	2.6	1.4			3.3		2.5
Potassium-Dissolved (mg/L)				15	11	5	6	5	12	10	7	8	9
Potassium-Total (mg/L)	9.5	11.4	11					5.3	11.3	13	37.4	8.8	13.5
Radium 226-Dissolved (pCi/L)			0.1	0.3		0.1	0.1	0.1	-0.02	0.1	2	-0.02	0.3
Radium 226-Suspended (pCi/L)			0.1	0.1	0.1	0.4	0.1	0.1	-0.7	0	3.1	-0.9	0.2
Radium 226-Total (pCi/L)	0.1	0.1	0.1		0.1	0.4	0.1	0.1	-0.7	0.1	5.1	-0.95	0.4
Selenium-Dissolved (mg/L)				0.0005	0.0005	0.002	0.002	0.003	0.0005	0.0005	0.0025	0.0005	0.0013
Selenium-IV-Dissolved (mg/L)				0.0005	0.0005	0.0005	0.0005	0.0005	0.0005	0.0005	0.002	0.0005	0.0007
Selenium-IV-Total (mg/L)				0.0005	0.0005	0.0005	0.0005	0.0005	0.0005	0.0005	0.0005	0.0005	0.0005
Selenium-Total (mg/L)	0.002	0.003	0.001	0.0005	0.0005	0.001	0.001	0.003	0.0005	0.0005	0.0005	0.0005	0.0012
Selenium-VI-Dissolved (mg/L)				0.0005	0.0005	0.002	0.002	0.003	0.0005	0.0005	0.0005	0.0005	0.0011
Selenium-VI-Total (mg/L)				0.0005	0.0005	0.001	0.001	0.003	0.0005	0.0005	0.0005	0.0005	0.0009
Silica-Dissolved (mg/L)				0.5	1.6	11	11	13	6.9	2.1	2.9	2.2	5.7
Silica-Total (mg/L)	2.7	6.2	3.8					14.6	8.2	4.8	51.9	12.9	13.1
Silver-Dissolved (mg/L)				0.0025	0.0025	0.0025	0.0025	0.0025	0.0025	0.0025	0.0025	0.0025	0.0025
Silver-Total (mg/L)	0.0025	0.0025	0.0025	0.0025	0.0025	0.0025	0.0025	0.0025	0.0025	0.0025	0.0025	0.0025	0.0025
Sodium Adsorption Ratio (SAR) (meq/L)				11	13	4.7	4.5	1.9	10	6.8	2.5	9.9	7.14
Sodium-Dissolved (mg/L)				950	1240	426	412	182	864	625	93	856	628
Sodium-Total (mg/L)	213	263	242					191	876	659	99	902	431
Solids-Suspended Sediment SSC (mg/L)	19	47	40	4510	20	13	13	12	11	19	4840	59	800
Solids-Total Dissolved Calculated (mg/L)	967	1120	1090	4520	5860	3110	3210	2610	4070	3840	609	3830	2903
Solids-Total Dissolved TDS (mg/L)	950	1100	1200	4600	6100	3500	3500	2900	4300	3800	620	4000	3048
Solids-Total Suspended TSS (mg/L)	27	51	31	2.5	20	10	12	12	12	17	4600	100	408
Sulfate (mg/L)	463	511	568	2180	2540	1430	1510	1470	2490	1570	317	1410	1372

POWERTECH (USA) INC.

BVC01													
Parameters	7/24/2007	8/20/2007	9/26/2007	10/17/2007	11/19/2007	12/11/2007*	12/11/2007*	1/11/2008	3/9/2008	4/14/2008	5/26/2008	6/17/2008	Average
TDS Balance (0.80 - 1.20) (dec.%)	0.98	0.96	1.08	1.02	1.04	1.14	1.1	1.09	1.04	0.99	1.01	1.04	1.04
Thorium 230-Dissolved (pCi/L)			0.1	0.1	0.1	0.1	0.1	0.1	0.0	0.3	0.0	0.1	0.1
Thorium 230-Suspended (pCi/L)			0.1	0.7	0.1	0.1	0.1	0.1	0.4	0.8	3.4	0.2	0.6
Thorium 230-Total (pCi/L)			0.1		0.1	0.1	0.1	0.1	0.4	1.1	3.4	0.3	0.6
Thorium 232-Dissolved (pCi/L)				0.0025	0.0025	0.0025	0.0025	0.0025	0.0025	0.0025	0.0025	0.0025	0.0025
Thorium 232-Suspended (mg/L)	0.0005	0.0005	0.0005	0.0005	0.0005	0.0005	0.0005	0.0005	0.0005	0.0005	0.013	0.0005	0.0015
Thorium 232-Total (mg/L)			0.0025	0.0025	0.0025	0.0025	0.0025	0.0025	0.0025	0.0025	0.04	0.0025	0.006
Uranium-Dissolved (mg/L)			0.0075	0.0097	0.0182	0.0124	0.0129	0.0134	0.0269	0.0125	0.002	0.0092	0.012
Uranium-Suspended (mg/L)	0.00015	0.00015	0.00015	0.00015	0.00015	0.00015	0.0004	0.00015	0.0009	0.00015	0.0031	0.00015	0.0005
Uranium-Total (mg/L)	0.004	0.0046	0.0076	0.0097	0.018	0.0142	0.0151	0.0139	0.0262	0.0127	0.0109	0.0113	0.012
Vanadium-Dissolved (mg/L)				0.05	0.05	0.05	0.05	0.05	0.05	0.05	0.05	0.05	0.05
Vanadium-Total (mg/L)	0.05	0.05	0.05	0.05	0.05	0.05	0.05	0.05	0.05	0.05	0.4	0.05	0.08
Zinc-Dissolved (mg/L)				0.005	0.005	0.005	0.005	0.005	0.005	0.005	0.005	0.005	0.005
Zinc-Total (mg/L)	0.005	0.005	0.005	0.005	0.03	0.005	0.005	0.005	0.005	0.005	0.54	0.02	0.053

* Replicate

POWERTECH (USA) INC.

Water Quality Data from BVC04

BVC04													
Parameters	7/24/2007	8/20/2007	9/28/2007	10/17/2007	11/19/2007	12/11/2007	1/11/2008	3/9/2008*	3/9/2008*	4/14/2008	5/26/2008	6/17/2008	Average
A/C Balance (± 5) (%)	4.79	0.739	-3.55	-4.07	-1.84	-2.15	1.72	3.3	-1.79	-6.02	-1.82	9.39	-0.11
Alkalinity-Total as CaCO3 (mg/L)	80	106	110	166	176	190	220	118	116	186	84	148	142
Aluminum-Dissolved (mg/L)			0.05	0.05	0.05	0.05	0.05	0.05	0.05	0.05	0.05	0.05	0.05
Aluminum-Total (mg/L)			2	0.6	0.2	0.1	0.6	9.9	8.3	0.7	61.3	3.2	8.7
Ammonia (mg/L)				0.05	0.05	0.05	0.05	0.05	0.05	0.05	0.05	0.05	0.05
Anions (meq/L)	26.6	14.6	91.7	94.5	67.4	51	41.7	26.1	27.9	91.1	7.96	46.6	48.9
Arsenic-Dissolved (mg/L)			0.001	0.0005	0.001	0.0005	0.0005	0.0005	0.0005	0.001	0.0005	0.0005	0.0007
Arsenic-Total (mg/L)	0.003	0.003	0.002	0.0005	0.001	0.0005	0.001	0.004	0.004	0.003	0.023	0.004	0.004
Bacteria, Fecal Coliform (cfu/100ml)	110	350	12	62	1	10	4	32	36	1	1200	44	155
Barium-Dissolved (mg/L)			0.05	0.05	0.05	0.05	0.05	0.05	0.05	0.05	0.05	0.05	0.05
Barium-Total (mg/L)	0.05	0.05	0.05	0.05	0.05	0.05	0.05	0.05	0.05	0.05	0.5	0.1	0.09
Bicarbonate as HCO3 (mg/L)	98	129	134	202	215	232	268	144	141	227	102	180	173
Boron-Dissolved (mg/L)			0.5	0.6	0.4	0.2	0.2	0.2	0.1	0.3	0.2	0.4	0.31
Boron-Total (mg/L)	0.2	0.05	0.4	0.6	0.4	0.2	0.2	0.1	0.1	0.4	0.2	0.4	0.27
Cadmium-Dissolved (mg/L)			0.0025	0.0025	0.0025	0.0025	0.0025	0.0025	0.0025	0.0025	0.0025	0.0025	0.0025
Cadmium-Total (mg/L)	0.0025	0.0025	0.0025	0.0025	0.0025	0.0025	0.0025	0.0025	0.0025	0.0025	0.0025	0.0025	0.0025
Calcium-Dissolved (mg/L)			288	382	426	449	463	225	220	455	51.5	300	326
Calcium-Total (mg/L)	146	77.8					508	217	223	401	81.3	309	245
Carbonate as CO3 (mg/L)	2.5	2.5	2.5	2.5	2.5	2.5	2.5	2.5	2.5	2.5	2.5	2.5	2.5
Cations (meq/L)	29.3	14.8	85.4	87.1	65	48.8	43.2	27.9	27	80.8	7.68	56.2	47.8
Chloride (mg/L)	251	118	1310	1540	1040	601	255	339	364	1730	9	739	691
Chromium-Dissolved (mg/L)			0.005	0.005	0.005	0.005	0.005	0.005	0.005	0.005	0.005	0.005	0.005
Chromium-Hexavalent (mg/L)			0.0025	0.0025	0.0025	0.0025	0.0025	0.0025	0.008	0.0025	0.0025	0.0025	0.0031
Chromium-Total (mg/L)	0.025	0.025	0.025	0.025	0.025	0.025	0.025	0.025	0.025	0.025	0.08	0.025	0.030
Chromium-Trivalent (mg/L)			0.005	0.005	0.005	0.005	0.005	0.005	0.005	0.005	0.005	0.005	0.005

POWERTECH (USA) INC.

BVC04													
Parameters	7/24/2007	8/20/2007	9/28/2007	10/17/2007	11/19/2007	12/11/2007	1/11/2008	3/9/2008*	3/9/2008*	4/14/2008	5/26/2008	6/17/2008	Average
Conductivity @ 25 C (umhos/cm)	2660	1400	7030	7130	5460	4370	3310	2640	2510	7540	784	514	3779
Copper-Dissolved (mg/L)			0.005	0.005	0.005	0.005	0.005	0.005	0.005	0.005	0.005	0.005	0.005
Copper-Total (mg/L)	0.005	0.005	0.005	0.005	0.005	0.005	0.005	0.005	0.005	0.005	0.07	0.005	0.010
Fluoride (mg/L)	0.45	0.4	0.05	0.05	0.5	0.3	0.3	0.4	0.3	0.05	0.6	0.7	0.3
Gross Alpha-Total (pCi/L)	11.4	7	2.3	26.6	34.7	17.1	13.9	6.7	8.8	23.4	12.5	3.9	14.0
Gross Beta-Total (pCi/L)	13.9	15.4	1	14	48.1	11.7	7.2	-2	2.9	2.8	12.9	-12.4	9.6
Gross Gamma-Total (pCi/L)			10	10	1080	1100	10	10	10	0	0	0	223
Iron-Dissolved (mg/L)			0.015	0.015	0.015	0.015	0.015	0.015	0.015	0.04	0.04	0.015	0.02
Iron-Total (mg/L)	1.34	2.48	1.34	0.39	0.31	0.19	0.68	8.65	8.28	0.74	63.1	2.69	7.5
Lead 210-Dissolved (pCi/L)			0.5	0.5	0.5	26	2.2				0.9		5.1
Lead 210-Suspended (pCi/L)			1	0.5	0.5	8.6	0.5				-30		-3.2
Lead 210-Total (pCi/L)					0.5	35	2.2				33		17.7
Lead-Dissolved (mg/L)			0.0005	0.0005	0.0005	0.0005	0.0005	0.0005	0.0005	0.0005	0.0005	0.0005	0.0005
Lead-Total (mg/L)	0.002	0.003	0.001	0.0005	0.0005	0.0005	0.0005	0.007	0.008	0.0005	0.047	0.002	0.006
Magnesium-Dissolved (mg/L)			171	210	140	101	124	53.3	51.9	177	13.2	105	115
Magnesium-Total (mg/L)	47.7	24.8					125	53.5	54.8	161	32.8	111	76
Manganese-Dissolved (mg/L)			0.02	0.16	0.1	0.04	0.05	0.08	0.09	0.55	0.005	0.28	0.14
Manganese-Total (mg/L)	0.51	0.41	0.1	0.18	0.1	0.05	0.12	0.28	0.29	0.72	1.34	0.44	0.38
Mercury-Dissolved (mg/L)			0.0005	0.0005	0.0005	0.0005	0.0005	0.0005	0.0005	0.0005	0.0005	0.0005	0.0005
Mercury-Total (mg/L)	0.0005	0.0005	0.0005	0.0005	0.0005	0.0005	0.0005	0.00055	0.00055	0.00055	0.00005	0.00005	0.0004
Molybdenum-Dissolved (mg/L)			0.05	0.05	0.05	0.05	0.05	0.05	0.05	0.05	0.05	0.05	0.05
Molybdenum-Total (mg/L)	0.05	0.05	0.05	0.05	0.05	0.05	0.05	0.05	0.05	0.05	0.05	0.05	0.05
Nickel-Dissolved (mg/L)			0.005	0.005	0.005	0.005	0.005	0.005	0.005	0.005	0.005	0.005	0.005
Nickel-Total (mg/L)	0.025	0.025	0.025	0.025	0.025	0.025	0.025	0.025	0.025	0.025	0.08	0.025	0.030
Nitrogen, Nitrate as N (mg/L)	0.05	0.4	0.05	0.05	0.1	0.3	0.4	0.5	0.5	0.05	0.3	0.05	0.23
pH	7.72	8.48	8.23	7.94	7.97	7.88	7.8	8.09	7.9	7.97	7.71	8.14	7.99
Polonium 210-Dissolved (pCi/L)			0.5	3	1.3	0.5	1.8				0.1		1.2

POWERTECH (USA) INC.

BVC04													
Parameters	7/24/2007	8/20/2007	9/28/2007	10/17/2007	11/19/2007	12/11/2007	1/11/2008	3/9/2008*	3/9/2008*	4/14/2008	5/26/2008	6/17/2008	Average
Polonium 210-Suspended (pCi/L)			1	0.5	1.7	2.9	0.5				3.7		1.7
Polonium 210-Total (pCi/L)					3	2.9	1.8				3.8		2.9
Potassium-Dissolved (mg/L)			10	9	7	5	5	5	5	6	6	9	7
Potassium-Total (mg/L)	10	10.1					5.4	6.6	6.4	14.4	20.4	9.7	10.4
Radium 226-Dissolved (pCi/L)			0.1	0.5		0.1	0.1	0.08	0.06	0.1	-0.06	0.1	0.1
Radium 226-Suspended (pCi/L)			0.45	0.1	0.8	0.3	0.1	2.5	-0.3	0.2	2.2	-0.7	0.6
Radium 226-Total (pCi/L)	0.1	0.7	0.7		0.8	0.3	0.1	0.1	-0.2	0.3	2.2	-0.53	0.4
Selenium-Dissolved (mg/L)			0.003	0.0005	0.004	0.002	0.003	0.002	0.001	0.0005	0.0025	0.0005	0.0019
Selenium-IV-Dissolved (mg/L)				0.0005	0.0005	0.0005	0.0005	0.001	0.0005	0.0005	0.0005	0.0005	0.0006
Selenium-IV-Total (mg/L)			0.0005	0.0005	0.0005	0.0005	0.0005	0.001	0.0005	0.0005	0.0005	0.0005	0.00055
Selenium-Total (mg/L)	0.002	0.002	0.0005	0.0005	0.004	0.002	0.003	0.002	0.002	0.0005	0.0005	0.0005	0.0016
Selenium-VI-Dissolved (mg/L)				0.0005	0.004	0.002	0.003	0.0005	0.001	0.0005	0.0005	0.0005	0.0014
Selenium-VI-Total (mg/L)			0.0005	0.0005	0.004	0.002	0.003	0.0005	0.001	0.0005	0.0005	0.0005	0.0013
Silica-Dissolved (mg/L)			1	2	9.1	11.9	14.1	7.4	7.2	2.6	2.8	4.1	6.2
Silica-Total (mg/L)	7.9	15.5					16.6	54.5	46.3	6	77.6	12.9	29.7
Silver-Dissolved (mg/L)			0.0025	0.0025	0.0025	0.0025	0.0025	0.0025	0.0025	0.0025	0.0025	0.0025	0.0025
Silver-Total (mg/L)	0.0025	0.0025	0.0025	0.0025	0.0025	0.0025	0.0025	0.0025	0.0025	0.0025	0.0025	0.0025	0.0025
Sodium Adsorption Ratio (SAR) (meq/L)				12	7.9	4.6	2.4	4.3	4.2	10	2.8	9.4	6.40
Sodium-Dissolved (mg/L)			1100	1160	736	415	224	280	266	995	89	743	601
Sodium-Total (mg/L)	404	194					259	273	277	1070	96	770	418
Solids-Suspended Sediment SSC (mg/L)	111	156	86	5820	14	11	24	323	326	40	2700	51	805
Solids-Total Dissolved Calculated (mg/L)	1770	945	5640	5700	4110	3140	2650	1680	1730	5340	516	3090	3026
Solids-Total Dissolved TDS (mg/L)	1800	910	5600	5800	4500	3500	3000	1800	1800	5100	520	3500	3153
Solids-Total Suspended TSS (mg/L)	100	160	47	16	16	10	25	270	290	32	2200	55	268
Sulfate (mg/L)	859	436	2520	2670	1920	1450	1450	681	736	1860	286	1090	1330
TDS Balance (0.80 - 1.20) (dec.%)	1.03	0.97	0.99	1.01	1.09	1.11	1.12	1.06	1.02	0.96	1.02	1.12	1.04

POWERTECH (USA) INC.

BVC04													
Parameters	7/24/2007	8/20/2007	9/28/2007	10/17/2007	11/19/2007	12/11/2007	1/11/2008	3/9/2008*	3/9/2008*	4/14/2008	5/26/2008	6/17/2008	Average
Thorium 230-Dissolved (pCi/L)			1.7	0.1	0.1	0.1	0.1	0.2	0.1	0.1	0.0	0	0.3
Thorium 230-Suspended (pCi/L)			1	0.1	0.1	0.1	0.1	0.3	1	0.1	2.1	0.3	0.5
Thorium 230-Total (pCi/L)					0.1	0.1	0.1	0.5	1	0.2	2.1	0.3	0.6
Thorium 232-Dissolved (pCi/L)			0.0025	0.0025	0.0025	0.0025	0.0025	0.0025	0.0025	0.0025	0.0025	0.0025	0.0025
Thorium 232-Suspended (mg/L)	0.0005	0.0005	0.0005	0.0005	0.0005	0.0005	0.0005	0.004	0.004	0.0005	0.009	0.0005	0.0018
Thorium 232-Total (mg/L)			0.0025	0.0025	0.0025	0.0025	0.0025	0.005	0.0025	0.0025	0.021	0.0025	0.005
Uranium-Dissolved (mg/L)			0.014	0.023	0.0189	0.0114	0.0141	0.0056	0.0055	0.0165	0.0017	0.0078	0.012
Uranium-Suspended (mg/L)	0.0006	0.00015	0.00015	0.00015	0.00015	0.00015	0.00015	0.0014	0.0011	0.00015	0.0021	0.00015	0.0005
Uranium-Total (mg/L)	0.0073	0.003	0.0137	0.0239	0.0177	0.0135	0.0144	0.0061	0.0062	0.0169	0.0069	0.0097	0.012
Vanadium-Dissolved (mg/L)			0.05	0.05	0.05	0.05	0.05	0.05	0.05	0.05	0.05	0.05	0.05
Vanadium-Total (mg/L)	0.05	0.05	0.05	0.05	0.05	0.05	0.05	0.05	0.05	0.05	0.2	0.05	0.06
Zinc-Dissolved (mg/L)			0.005	0.005	0.005	0.005	0.005	0.005	0.005	0.005	0.005	0.005	0.005
Zinc-Total (mg/L)	0.01	0.01	0.005	0.005	0.005	0.005	0.005	0.06	0.04	0.005	0.27	0.02	0.037

* Replicate

POWERTECH (USA) INC.

Water Quality Data from PSC01

PSC01			
Parameters	7/19/2007	7/18/2008*	Average
A/C Balance (± 5) (%)	-2.54	-4.89	-3.72
Alkalinity-Total as CaCO3 (mg/L)	56	104	80
Aluminum-Dissolved (mg/L)		0.05	0.05
Aluminum-Total (mg/L)		233	233
Ammonia (mg/L)		0.6	0.6
Anions (meq/L)	30.5	23.7	27.1
Arsenic-Dissolved (mg/L)		0.008	0.008
Arsenic-Total (mg/L)	0.003	0.073	0.038
Bacteria, Fecal Coliform (cfu/100ml)	4000		4000
Barium-Dissolved (mg/L)		0.3	0.3
Barium-Total (mg/L)	0.2	1.2	0.7
Bicarbonate as HCO3 (mg/L)	68	127	98
Boron-Dissolved (mg/L)		0.05	0.05
Boron-Total (mg/L)	0.05	0.6	0.33
Cadmium-Dissolved (mg/L)		0.0025	0.0025
Cadmium-Total (mg/L)	0.0025	0.0025	0.0025
Calcium-Dissolved (mg/L)		422	422
Calcium-Total (mg/L)	510	949	730
Carbonate as CO3 (mg/L)	2.5	2.5	2.5
Cations (meq/L)	29	21.5	25.3
Chloride (mg/L)	2.8	2	2.4
Chromium-Dissolved (mg/L)		0.005	0.005
Chromium-Total (mg/L)	0.025	0.34	0.183
Conductivity @ 25 C (umhos/cm)	1840	1710	1775
Copper-Dissolved (mg/L)		0.005	0.005
Copper-Total (mg/L)	0.005	0.21	0.108
Fluoride (mg/L)	0.14	0.2	0.17
Gross Alpha-Total (pCi/L)	8.8	7	7.9
Gross Beta-Total (pCi/L)	15.1	12.8	14.0
Gross Gamma-Total (pCi/L)		0	0
Iron-Dissolved (mg/L)		0.1	0.1
Iron-Total (mg/L)	2	253	128
Lead-Dissolved (mg/L)		0.0005	0.0005
Lead-Total (mg/L)	0.002	0.144	0.073
Magnesium-Dissolved (mg/L)		20.3	20.3
Magnesium-Total (mg/L)	30.5	387	209
Manganese-Dissolved (mg/L)		0.81	0.81
Manganese-Total (mg/L)	0.16	6.34	3.25
Mercury-Dissolved (mg/L)		0.0005	0.0005
Mercury-Total (mg/L)	0.0005	0.0001	0.0003
Molybdenum-Dissolved (mg/L)		0.05	0.05
Molybdenum-Total (mg/L)	0.05	0.05	0.05
Nickel-Dissolved (mg/L)		0.005	0.005
Nickel-Total (mg/L)	0.025	0.33	0.18

POWERTECH (USA) INC.

PSC01			
Parameters	7/19/2007	7/18/2008*	Average
Nitrogen, Nitrate as N (mg/L)	0.77	0.05	0.41
pH	7.16	7.12	7.14
Potassium-Dissolved (mg/L)		10	10
Potassium-Total (mg/L)	12.4	87.5	50.0
Radium 226-Dissolved (pCi/L)		0.3	0.3
Radium 226-Suspended (pCi/L)		7.1	7.1
Radium 226-Total (pCi/L)	0.7	7.4	4.1
Selenium-Dissolved (mg/L)		0.0025	0.0025
Selenium-IV-Dissolved (mg/L)		0.0005	0.0005
Selenium-Total (mg/L)	0.002		0.002
Selenium-VI-Dissolved (mg/L)		0.0005	0.0005
Silica-Dissolved (mg/L)		5.2	5.2
Silica-Total (mg/L)	16.5	64	40.3
Silver-Dissolved (mg/L)		0.0025	0.0025
Silver-Total (mg/L)	0.0025	0.0025	0.0025
Sodium Adsorption Ratio (SAR) (meq/L)		0.05	0.05
Sodium-Dissolved (mg/L)		4	4
Sodium-Total (mg/L)	6.3	6	6.2
Solids-Suspended Sediment SSC (mg/L)	134	9760	4947
Solids-Total Dissolved Calculated (mg/L)	2020	1530	1775
Solids-Total Dissolved TDS @ (mg/L)	1700	1600	1650
Solids-Total Suspended TSS @ (mg/L)	150	12000	6075
Sulfate (mg/L)	1400	1040	1220
TDS Balance (0.80 - 1.20) (dec.%)	0.86	1.06	0.96
Thorium 230-Dissolved (pCi/L)		0	0
Thorium 230-Suspended (pCi/L)		4.2	4.2
Thorium 230-Total (pCi/L)		4.2	4.2
Thorium 232-Dissolved (mg/L)		0.0025	0.0025
Thorium 232-Suspended (mg/L)	0.0005	0.038	0.0193
Thorium 232-Total (mg/L)		0.042	0.042
Uranium-Dissolved (mg/L)		0.0016	0.0016
Uranium-Suspended (mg/L)	0.0004	0.0131	0.0068
Uranium-Total (mg/L)	0.01	0.0206	0.0153
Vanadium-Dissolved (mg/L)		0.05	0.05
Vanadium-Total (mg/L)	0.05	0.5	0.28
Zinc-Dissolved (mg/L)		0.005	0.005
Zinc-Total (mg/L)	0.03	0.73	0.38

*Passive sampler bottle 2

POWERTECH (USA) INC.

Water Quality Data from PSC02

PSC02				
Parameters	7/19/2007	7/18/2008*	7/18/2008**	Average
A/C Balance (± 5) (%)	3.42	2.96	-4.26	0.71
Alkalinity-Total as CaCO3 (mg/L)	50	106	94	83
Aluminum-Dissolved (mg/L)		0.05	0.05	0.05
Aluminum-Total (mg/L)		324	322	323
Ammonia (mg/L)		0.6	0.4	0.5
Anions (meq/L)	14.5	27.6	31.5	24.5
Arsenic-Dissolved (mg/L)		0.008	0.003	0.006
Arsenic-Total (mg/L)	0.003	0.097	0.107	0.069
Bacteria, Fecal Coliform (cfu/100ml)	4400			4400
Barium-Dissolved (mg/L)		0.3	0.3	0.3
Barium-Total (mg/L)	0.3	1	1.1	0.8
Bicarbonate as HCO3 (mg/L)	61	129	115	102
Boron-Dissolved (mg/L)		0.05	0.05	0.05
Boron-Total (mg/L)	0.05	0.9	0.9	0.62
Cadmium-Dissolved (mg/L)		0.0025	0.0025	0.0025
Cadmium-Total (mg/L)	0.0025	0.0025	0.0025	0.0025
Calcium-Dissolved (mg/L)		551	564	558
Calcium-Total (mg/L)	270	1710	1780	1253
Carbonate as CO3 (mg/L)	2.5	2.5	2.5	2.5
Cations (meq/L)	15.6	29.3	28.9	24.6
Chloride (mg/L)	1.6	1	3	1.9
Chromium-Dissolved (mg/L)		0.005	0.005	0.005
Chromium-Total (mg/L)	0.025	0.51	0.52	0.352
Conductivity @ 25 C (umhos/cm)	1240	2000	2220	1820
Copper-Dissolved (mg/L)		0.005	0.005	0.005
Copper-Total (mg/L)	0.005	0.33	0.32	0.22
Fluoride (mg/L)	0.14	0.2	0.2	0.18
Gross Alpha-Total (pCi/L)	1.9	14.6	33.3	16.6
Gross Beta-Total (pCi/L)	11.9	-9	-5	-0.7
Gross Gamma-Total (pCi/L)		0	0	0
Iron-Dissolved (mg/L)		0.06	0.015	0.038
Iron-Total (mg/L)	0.28	337	356	231
Lead-Dissolved (mg/L)		0.0005	0.0005	0.0005
Lead-Total (mg/L)	0.002	0.229	0.24	0.157
Magnesium-Dissolved (mg/L)		16.8	22.4	19.6
Magnesium-Total (mg/L)	18	616	607	414
Manganese-Dissolved (mg/L)		0.8	0.86	0.83
Manganese-Total (mg/L)	0.12	10.8	11.4	7.4
Mercury-Dissolved (mg/L)		0.0005	0.0005	0.0005
Mercury-Total (mg/L)	0.0005	0.0001	0.0001	0.0002
Molybdenum-Dissolved (mg/L)		0.05	0.05	0.05
Molybdenum-Total (mg/L)	0.05	0.05	0.05	0.05
Nickel-Dissolved (mg/L)		0.005	0.005	0.005
Nickel-Total (mg/L)	0.025	0.54	0.51	0.36

POWERTECH (USA) INC.

PSC02

Parameters	7/19/2007	7/18/2008*	7/18/2008**	Average
Nitrogen, Nitrate as N (mg/L)	0.56	0.05	0.3	0.30
pH	7.26	7.21	7.16	7.21
Potassium-Dissolved (mg/L)		8	15	11.5
Potassium-Total (mg/L)	8	106	115	76
Radium 226-Dissolved (pCi/L)		0.05	0.6	0.33
Radium 226-Suspended (pCi/L)		21.3	24.8	23.1
Radium 226-Total (pCi/L)	0.1	21.3	25.4	15.6
Selenium-Dissolved (mg/L)		0.0025	0.0025	0.0025
Selenium-IV-Dissolved (mg/L)		0.0005	0.0005	0.0005
Selenium-Total (mg/L)	0.003			0.003
Selenium-VI-Dissolved (mg/L)		0.0005	0.0005	0.0005
Silica-Dissolved (mg/L)		4.8	4.7	4.8
Silica-Total (mg/L)	7	85.4	84.9	59.1
Silver-Dissolved (mg/L)		0.0025	0.0025	0.0025
Silver-Total (mg/L)	0.0025	0.0025	0.0025	0.0025
Sodium Adsorption Ratio (SAR) (meq/L)		0.05	0.1	0.08
Sodium-Dissolved (mg/L)		3	8	5.5
Sodium-Total (mg/L)	2	5	10	5.7
Solids-Suspended Sediment SSC (mg/L)	108	35800	24800	20236
Solids-Total Dissolved Calculated (mg/L)	998	1880	2060	1646
Solids-Total Dissolved TDS (mg/L)	1100	2100	2200	1800
Solids-Total Suspended TSS (mg/L)	140	26000	20000	15380
Sulfate (mg/L)	645	1220	1420	1095
TDS Balance (0.80 - 1.20) (dec.%)	1.07	1.1	1.08	1.08
Thorium 230-Dissolved (pCi/L)		0	0.1	0.05
Thorium 230-Suspended (pCi/L)		12.6	20	16.3
Thorium 230-Total (pCi/L)		12.6	20.1	16.4
Thorium 232-Dissolved (mg/L)		0.0025	0.0025	0.0025
Thorium 232-Suspended (mg/L)	0.0005	0.132	0.056	0.063
Thorium 232-Total (mg/L)		0.051	0.054	0.053
Uranium-Dissolved (mg/L)		0.0016	0.0172	0.0094
Uranium-Suspended (mg/L)	0.0005	0.0435	0.0543	0.0328
Uranium-Total (mg/L)	0.0012	0.0311	0.0888	0.0404
Vanadium-Dissolved (mg/L)		0.05	0.05	0.05
Vanadium-Total (mg/L)	0.05	0.7	0.8	0.5
Zinc-Dissolved (mg/L)		0.005	0.02	0.013
Zinc-Total (mg/L)	0.02	1.17	1.22	0.80

* Passive sampler bottle 1

** Passive sampler bottle 2

POWERTECH (USA) INC.

Water Quality Data from UNT01

UNT01	
Parameters	7/18/2008
A/C Balance (± 5) (%)	-7.33
Alkalinity-Total as CaCO3 (mg/L)	2.5
Aluminum-Dissolved (mg/L)	0.4
Aluminum-Total (mg/L)	8.1
Ammonia (mg/L)	0.4
Anions (meq/L)	5.89
Arsenic-Dissolved (mg/L)	0.0005
Arsenic-Total (mg/L)	0.03
Barium-Dissolved (mg/L)	0.05
Barium-Total (mg/L)	0.05
Bicarbonate as HCO3 (mg/L)	2.5
Boron-Dissolved (mg/L)	0.05
Boron-Total (mg/L)	0.05
Cadmium-Dissolved (mg/L)	0.0025
Cadmium-Total (mg/L)	0.0025
Calcium-Dissolved (mg/L)	51.6
Calcium-Total (mg/L)	59.2
Carbonate as CO3 (mg/L)	2.5
Cations (meq/L)	5.09
Chloride (mg/L)	1
Chromium-Dissolved (mg/L)	0.005
Chromium-Total (mg/L)	0.025
Conductivity @ 25 C (umhos/cm)	536
Copper-Dissolved (mg/L)	0.005
Copper-Total (mg/L)	0.01
Fluoride (mg/L)	0.3
Gross Alpha-Total (pCi/L)	6.1
Gross Beta-Total (pCi/L)	12.6
Gross Gamma-Total (pCi/L)	221
Iron-Dissolved (mg/L)	0.05
Iron-Total (mg/L)	8.93
Lead-Dissolved (mg/L)	0.0005
Lead-Total (mg/L)	0.008
Magnesium-Dissolved (mg/L)	22.4
Magnesium-Total (mg/L)	24.8
Manganese-Dissolved (mg/L)	3.87
Manganese-Total (mg/L)	5.06
Mercury-Dissolved (mg/L)	0.0005
Mercury-Total (mg/L)	0.0001
Molybdenum-Dissolved (mg/L)	0.05
Molybdenum-Total (mg/L)	0.05
Nickel-Dissolved (mg/L)	0.09
Nickel-Total (mg/L)	0.11
Nitrogen, Nitrate as N (mg/L)	0.6

POWERTECH (USA) INC.

UNT01	
Parameters	**7/18/2008**
pH	4.91
Potassium-Dissolved (mg/L)	8
Potassium-Total (mg/L)	10.1
Radium 226-Dissolved (pCi/L)	0.2
Radium 226-Suspended (pCi/L)	0.03
Radium 226-Total (pCi/L)	0.3
Selenium-Dissolved (mg/L)	0.0025
Selenium-IV-Dissolved (mg/L)	0.0005
Selenium-VI-Dissolved (mg/L)	0.0005
Silica-Dissolved (mg/L)	0.8
Silica-Total (mg/L)	12.5
Silver-Dissolved (mg/L)	0.0025
Silver-Total (mg/L)	0.0025
Sodium Adsorption Ratio (SAR) (meq/L)	0.05
Sodium-Dissolved (mg/L)	2.5
Sodium-Total (mg/L)	2
Solids-Suspended Sediment SSC (mg/L)	291
Solids-Total Dissolved Calculated (mg/L)	369
Solids-Total Dissolved TDS (mg/L)	380
Solids-Total Suspended TSS (mg/L)	290
Sulfate (mg/L)	278
TDS Balance (0.80 - 1.20) (dec.%)	1.02
Thorium 230-Dissolved (pCi/L)	0
Thorium 230-Suspended (pCi/L)	0
Thorium 230-Total (pCi/L)	-0.02
Thorium 232-Dissolved (mg/L)	0.0025
Thorium 232-Suspended (mg/L)	0.002
Thorium 232-Total (mg/L)	0.0025
Uranium-Dissolved (mg/L)	0.00015
Uranium-Suspended (mg/L)	0.00015
Uranium-Total (mg/L)	0.0009
Vanadium-Dissolved (mg/L)	0.05
Vanadium-Total (mg/L)	0.2
Zinc-Dissolved (mg/L)	0.06
Zinc-Total (mg/L)	0.09

POWERTECH (USA) INC.

Water Quality Data from SUB01

SUB01			
Parameters	3/24/2008	6/18/2008	Average
A/C Balance (± 5) (%)	4.36	1.86	3.11
Alkalinity-Total as CaCO3 (mg/L)	38	84	61
Aluminum-Dissolved (mg/L)	0.2	0.3	0.25
Aluminum-Total (mg/L)	22.4	52.8	37.6
Ammonia (mg/L)	0.05	1.2	0.63
Anions (meq/L)	2.17	2.54	2.36
Arsenic-Dissolved (mg/L)	0.001	0.003	0.002
Arsenic-Total (mg/L)	0.005	0.014	0.010
Bacteria, Fecal Coliform (cfu/100ml)	44	20	32
Barium-Dissolved (mg/L)	0.05	0.05	0.05
Barium-Total (mg/L)	0.1	0.2	0.15
Bicarbonate as HCO3 (mg/L)	46	102	74
Boron-Dissolved (mg/L)	0.05	0.1	0.08
Boron-Total (mg/L)	0.05	0.2	0.13
Cadmium-Dissolved (mg/L)	0.0025	0.0025	0.0025
Cadmium-Total (mg/L)	0.0025	0.0025	0.0025
Calcium-Dissolved (mg/L)	21	21.1	21.1
Calcium-Total (mg/L)	25.1	30.2	27.7
Carbonate as CO3 (mg/L)	2.5	2.5	2.5
Cations (meq/L)	2.37	2.63	2.50
Chloride (mg/L)	3	5	4
Chromium-Dissolved (mg/L)	0.005	0.005	0.005
Chromium-Hexavalent (mg/L)	0.005	0.025	0.015
Chromium-Total (mg/L)	0.025	0.06	0.043
Chromium-Trivalent (mg/L)	0.005	0.06	0.033
Conductivity @ 25 C (umhos/cm)	230	250	240
Copper-Dissolved (mg/L)	0.005	0.005	0.005
Copper-Total (mg/L)	0.02	0.03	0.025
Fluoride (mg/L)	0.3	0.6	0.45
Gross Alpha-Total (pCi/L)	2.4	16.2	9.3
Gross Beta-Total (pCi/L)	5.1	20.2	12.7
Gross Gamma-Total (pCi/L)	10	0	5
Iron-Dissolved (mg/L)	0.15	0.31	0.23
Iron-Total (mg/L)	15.1	44.1	29.6
Lead 210-Dissolved (pCi/L)		0.7	0.7
Lead 210-Suspended (pCi/L)		-2.1	-2.1
Lead 210-Total (pCi/L)		-1.4	-1.4
Lead-Dissolved (mg/L)	0.0005	0.0005	0.0005
Lead-Total (mg/L)	0.009	0.026	0.018
Magnesium-Dissolved (mg/L)	4.4	4.4	4.4
Magnesium-Total (mg/L)	8.4	15.1	11.8
Manganese-Dissolved (mg/L)	0.02	0.24	0.13
Manganese-Total (mg/L)	0.18	0.77	0.48
Mercury-Dissolved (mg/L)	0.0005	0.0005	0.0005

POWERTECH (USA) INC.

SUB01			
Parameters	3/24/2008	6/18/2008	Average
Mercury-Total (mg/L)	0.00005	0.0005	0.0003
Molybdenum-Dissolved (mg/L)	0.05	0.05	0.05
Molybdenum-Total (mg/L)	0.05	0.05	0.05
Nickel-Dissolved (mg/L)	0.005	0.005	0.005
Nickel-Total (mg/L)	0.025	0.025	0.025
Nitrogen, Nitrate as N (mg/L)	1.2	0.05	0.63
pH	7.73	7.07	7.40
Polonium 210-Dissolved (pCi/L)		0.1	0.1
Polonium 210-Suspended (pCi/L)		1.3	1.3
Polonium 210-Total (pCi/L)		1.4	1.4
Potassium-Dissolved (mg/L)	4	8	6
Potassium-Total (mg/L)	8.3	20.9	14.6
Radium 226-Dissolved (pCi/L)	0.2	0.5	0.35
Radium 226-Suspended (pCi/L)	1	-0.2	0.4
Radium 226-Total (pCi/L)	1.2	0.3	0.75
Selenium-Dissolved (mg/L)	0.0005	0.0025	0.0015
Selenium-IV-Dissolved (mg/L)	0.0005	0.0005	0.0005
Selenium-IV-Total (mg/L)	0.0005	0.0005	0.0005
Selenium-Total (mg/L)	0.001	0.0005	0.0008
Selenium-VI-Dissolved (mg/L)	0.0005	0.0005	0.0005
Selenium-VI-Total (mg/L)	0.001	0.0005	0.0008
Silica-Dissolved (mg/L)	8.6	7.9	8.25
Silica-Total (mg/L)	104	88.1	96.1
Silver-Dissolved (mg/L)	0.0025	0.0025	0.0025
Silver-Total (mg/L)	0.0025	0.0025	0.0025
Sodium Adsorption Ratio (SAR) (meq/L)	0.98	1.00	0.99
Sodium-Dissolved (mg/L)	18.9	20	19.5
Sodium-Total (mg/L)	17.8	21	19.4
Solids-Suspended Sediment SSC (mg/L)	198	393	296
Solids-Total Dissolved Calculated (mg/L)	162	164	163
Solids-Total Dissolved TDS @ (mg/L)	300	990	645
Solids-Total Suspended TSS @ (mg/L)	100	280	190
Sulfate (mg/L)	59	33	46
TDS Balance (0.80 - 1.20) (dec.%)	1.86	6.05	3.96
Thorium 230-Dissolved (pCi/L)	0.2	0.0	0.1
Thorium 230-Suspended (pCi/L)	0.2	0.4	0.3
Thorium 230-Total (pCi/L)	0.4	0.4	0.4
Thorium 232-Dissolved (mg/L)	0.0025	0.0025	0.0025
Thorium 232-Suspended (mg/L)	0.002	0.004	0.003
Thorium 232-Total (mg/L)	0.0025	0.012	0.0073
Uranium-Dissolved (mg/L)	0.00015	0.0003	0.0002
Uranium-Suspended (mg/L)	0.0006	0.0007	0.0007
Uranium-Total (mg/L)	0.0011	0.002	0.0016
Vanadium-Dissolved (mg/L)	0.05	0.05	0.05
Vanadium-Total (mg/L)	0.05	0.05	0.05
Zinc-Dissolved (mg/L)	0.005	0.01	0.008

POWERTECH (USA) INC.

SUB01			
Parameters	3/24/2008	6/18/2008	Average
Zinc-Total (mg/L)	0.06	0.13	0.10

POWERTECH (USA) INC.

Water Quality Data from SUB02

SUB02						
Parameters	9/27/2007	11/12/2007	2/10/2008	6/18/2008*	6/18/2008*	Average
A/C Balance (± 5) (%)	-4.01	-1.86	-3.33	4.36	3.39	-0.29
Alkalinity-Total as CaCO3 (mg/L)	92	102	90	96	98	96
Aluminum-Dissolved (mg/L)	0.05	0.05	0.05	0.05	0.05	0.05
Aluminum-Total (mg/L)	0.05	0.05	0.05	0.05	0.05	0.05
Ammonia (mg/L)		0.05	0.05	0.05	0.05	0.05
Anions (meq/L)	61.6	52.4	54.6	50.6	52.8	54.4
Arsenic-Dissolved (mg/L)	0.001	0.0005	0.001	0.0005	0.0005	0.0007
Arsenic-Total (mg/L)	0.0005	0.0005	0.0005	0.002	0.002	0.0011
Bacteria, Fecal Coliform (cfu/100ml)	2	1	1	1	1	1
Barium-Dissolved (mg/L)	0.05	0.05	0.05	0.05	0.05	0.05
Barium-Total (mg/L)	0.05	0.05	0.05	0.05	0.05	0.05
Bicarbonate as HCO3 (mg/L)	112	124	110	117	119	116
Boron-Dissolved (mg/L)	0.4	0.5	0.5	0.5	0.5	0.5
Boron-Total (mg/L)	0.5	0.4	0.5	0.5	0.5	0.5
Cadmium-Dissolved (mg/L)	0.0025	0.0025	0.0025	0.0025	0.0025	0.0025
Cadmium-Total (mg/L)	0.0025	0.0025	0.0025	0.0025	0.0025	0.0025
Calcium-Dissolved (mg/L)	622	561	538	609	620	590
Calcium-Total (mg/L)			579	602	627	603
Carbonate as CO3 (mg/L)	2.5	2.5	2.5	2.5	2.5	2.5
Cations (meq/L)	56.8	50.5	51.1	55.2	56.5	54.0
Chloride (mg/L)	23	22	24	19	19	21
Chromium-Dissolved (mg/L)	0.005	0.005	0.025	0.005	0.005	0.009
Chromium-Hexavalent (mg/L)	0.025	0.0025	0.0025	0.005	0.02	0.011
Chromium-Total (mg/L)	0.025	0.025	0.025	0.025	0.025	0.025
Chromium-Trivalent (mg/L)	0.005	0.005	0.005	0.005	0.005	0.005
Conductivity @ 25 C (umhos/cm)	3700	3340	3800	3540	3640	3604
Copper-Dissolved (mg/L)	0.005	0.005	0.005	0.005	0.005	0.005
Copper-Total (mg/L)	0.005	0.005	0.005	0.005	0.005	0.005
Fluoride (mg/L)	0.4	0.5	0.5	0.9	0.8	0.6
Gross Alpha-Total (pCi/L)	82.8	132	131	199	201	149
Gross Beta-Total (pCi/L)	55.9	83.3	81.5	80.1	88.7	77.9
Gross Gamma-Total (pCi/L)	10	1060	10	0	0	216
Iron-Dissolved (mg/L)	0.015	0.08	0.07	0.05	0.06	0.06
Iron-Total (mg/L)	0.14	0.23	0.22	0.18	0.25	0.20
Lead 210-Dissolved (pCi/L)	0.5	0.5		-1	-0.9	-0.2
Lead 210-Suspended (pCi/L)	0.5	0.5		1.5	-0.5	0.5
Lead 210-Total (pCi/L)		0.5		0.5	-1.4	-0.1
Lead-Dissolved (mg/L)	0.0005	0.0005	0.0005	0.0005	0.0005	0.0005
Lead-Total (mg/L)	0.0005	0.0005	0.0005	0.0005	0.0005	0.0005
Magnesium-Dissolved (mg/L)	212	180	198	204	211	201
Magnesium-Total (mg/L)			201	204	207	204
Manganese-Dissolved (mg/L)	0.005	0.005	0.005	0.005	0.005	0.005
Manganese-Total (mg/L)	0.02	0.02	0.04	0.005	0.01	0.019
Mercury-Dissolved (mg/L)	0.0005	0.0005	0.0005	0.0005	0.0005	0.0005

POWERTECH (USA) INC.

Parameters	SUB02					
	9/27/2007	11/12/2007	2/10/2008	6/18/2008*	6/18/2008*	Average
Mercury-Total (mg/L)	0.0005	0.0005	0.0005	0.0005	0.0005	0.0005
Molybdenum-Dissolved (mg/L)	0.05	0.05	0.05	0.05	0.05	0.05
Molybdenum-Total (mg/L)	0.05	0.05	0.05	0.05	0.05	0.05
Nickel-Dissolved (mg/L)	0.005	0.005	0.025	0.005	0.005	0.009
Nickel-Total (mg/L)	0.025	0.025	0.025	0.025	0.025	0.025
Nitrogen, Nitrate as N (mg/L)	0.05	0.1	0.2	0.05	0.05	0.09
pH	7.99	7.78	7.81	8.08	8.06	7.94
Polonium 210-Dissolved (pCi/L)	0.5	1.8		0	-0.2	0.5
Polonium 210-Suspended (pCi/L)	0.5	0.5		0.3	0.3	0.4
Polonium 210-Total (pCi/L)		1.5		0.3	0.1	0.6
Potassium-Dissolved (mg/L)	21	21	23	20	20	21
Potassium-Total (mg/L)			23.6	21.1	21.5	22.1
Radium 226-Dissolved (pCi/L)	0.6	0.6	0.4	0.7	0.6	0.6
Radium 226-Suspended (pCi/L)	0.1	0.1	0.1	-0.4	-0.5	-0.1
Radium 226-Total (pCi/L)		0.6	0.6	0.2	0.1	0.4
Selenium-Dissolved (mg/L)	0.006	0.002	0.002	0.0025	0.0025	0.003
Selenium-IV-Dissolved (mg/L)		0.0005	0.0005	0.0005	0.0005	0.0005
Selenium-IV-Total (mg/L)	0.0005	0.0005	0.0005	0.0005	0.0005	0.0005
Selenium-Total (mg/L)	0.001	0.002	0.002	0.003	0.001	0.0018
Selenium-VI-Dissolved (mg/L)		0.002	0.0005	0.002	0.001	0.001
Selenium-VI-Total (mg/L)	0.001	0.002	0.002	0.003	0.001	0.002
Silica-Dissolved (mg/L)	2	2.4	2.8	0.25	0.25	1.54
Silica-Total (mg/L)			2.9	0.25	0.25	1.13
Silver-Dissolved (mg/L)	0.0025	0.0025	0.0025	0.0025	0.0025	0.0025
Silver-Total (mg/L)	0.0025	0.0025	0.0025	0.0025	0.0025	0.0025
Sodium Adsorption Ratio (SAR) (meq/L)		1.6	1.6	1.5	1.6	1.6
Sodium-Dissolved (mg/L)	163	165	169	172	177	169
Sodium-Total (mg/L)			175	180	179	178
Solids-Suspended Sediment SSC (mg/L)	2.5	2.5	2.5	2.5	2.5	2.5
Solids-Total Dissolved Calculated (mg/L)	3950	3400	3510	3390	3520	3554
Solids-Total Dissolved TDS @ (mg/L)	3900	3900	2900	3800	3800	3660
Solids-Total Suspended TSS @ (mg/L)	2.5	2.5	10	7	5	5.40
Sulfate (mg/L)	2840	2390	2500	2310	2410	2490
TDS Balance (0.80 - 1.20) (dec.%)	0.99	1.15	0.83	1.12	1.07	1.03
Thorium 230-Dissolved (pCi/L)	0.1	0.1	0.4	0.1	0.1	0.2
Thorium 230-Suspended (pCi/L)	0.1	0.7	0.4	0.1	0.3	0.3
Thorium 230-Total (pCi/L)		0.1	0.5	0.2	0.4	0.3
Thorium 232-Dissolved (mg/L)	0.0025	0.0025	0.0025	0.0025	0.0025	0.0025
Thorium 232-Suspended (mg/L)	0.0005	0.0005	0.0005	0.0005	0.0005	0.0005
Thorium 232-Total (mg/L)	0.0025	0.0025	0.0025	0.0025	0.0025	0.0025
Uranium-Dissolved (mg/L)	0.164	0.171	0.177	0.175	0.174	0.172
Uranium-Suspended (mg/L)	0.00015	0.00015	0.00015	0.00015	0.00015	0.00015
Uranium-Total (mg/L)	0.168	0.162	0.168	0.19	0.19	0.18
Vanadium-Dissolved (mg/L)	0.05	0.05	0.05	0.05	0.05	0.05
Vanadium-Total (mg/L)	0.05	0.05	0.05	0.05	0.10	0.06
Zinc-Dissolved (mg/L)	0.005	0.005	0.005	0.005	0.005	0.005

POWERTECH (USA) INC.

SUB02						
Parameters	9/27/2007	11/12/2007	2/10/2008	6/18/2008*	6/18/2008*	Average
Zinc-Total (mg/L)	0.005	0.005	0.01	0.005	0.005	0.006

* Replicate

POWERTECH (USA) INC.

Water Quality Data from SUB03

SUB03			
Parameters	11/12/2007	6/18/2008	Average
A/C Balance (± 5) (%)	0.0673	4.34	2.20
Alkalinity-Total as CaCO3 (mg/L)	2.5	2.5	2.5
Aluminum-Dissolved (mg/L)	0.6	0.6	0.6
Aluminum-Total (mg/L)	0.7	1.2	1.0
Ammonia (mg/L)	0.1	0.1	0.1
Anions (meq/L)	12.9	10.7	11.8
Arsenic-Dissolved (mg/L)	0.0005	0.0005	0.0005
Arsenic-Total (mg/L)	0.0005	0.002	0.001
Bacteria, Fecal Coliform (cfu/100ml)	1	1	1
Barium-Dissolved (mg/L)	0.05	0.05	0.05
Barium-Total (mg/L)	0.05	0.05	0.05
Bicarbonate as HCO3 (mg/L)	2.5	2.5	2.5
Boron-Dissolved (mg/L)	0.05	0.2	0.13
Boron-Total (mg/L)	0.05	0.1	0.08
Cadmium-Dissolved (mg/L)	0.0025	0.0025	0.0025
Cadmium-Total (mg/L)	0.0025	0.0025	0.0025
Calcium-Dissolved (mg/L)	128	130	129
Calcium-Total (mg/L)		132	132
Carbonate as CO3 (mg/L)	2.5	2.5	2.5
Cations (meq/L)	12.9	11.7	12.3
Chloride (mg/L)	9	2	6
Chromium-Dissolved (mg/L)	0.005	0.005	0.005
Chromium-Hexavalent (mg/L)	0.0025	0.006	0.0043
Chromium-Total (mg/L)	0.025	0.025	0.025
Chromium-Trivalent (mg/L)	0.005	0.005	0.005
Conductivity @ 25 C (umhos/cm)	1080	975	1028
Copper-Dissolved (mg/L)	0.005	0.005	0.005
Copper-Total (mg/L)	0.005	0.005	0.005
Fluoride (mg/L)	0.2	0.4	0.3
Gross Alpha-Total (pCi/L)	16.6	19.9	18.3
Gross Beta-Total (pCi/L)	38.8	21.8	30.3
Gross Gamma-Total (pCi/L)	1270	1080	1175
Iron-Dissolved (mg/L)	0.12	0.24	0.18
Iron-Total (mg/L)	0.16	1.1	0.63
Lead 210-Dissolved (pCi/L)	0.5	-3	-1.3
Lead 210-Suspended (pCi/L)	0.5	-0.8	-0.2
Lead 210-Total (pCi/L)	0.5	-3.8	-1.7
Lead-Dissolved (mg/L)	0.0005	0.0005	0.0005
Lead-Total (mg/L)	0.0005	0.0005	0.0005
Magnesium-Dissolved (mg/L)	53.4	47.4	50.4
Magnesium-Total (mg/L)		48.6	48.6
Manganese-Dissolved (mg/L)	11.6	8.44	10.02
Manganese-Total (mg/L)	12.2	8.43	10.3
Mercury-Dissolved (mg/L)	0.0005	0.0005	0.0005

POWERTECH (USA) INC.

SUB03			
Parameters	11/12/2007	6/18/2008	Average
Mercury-Total (mg/L)	0.0005	0.0005	0.0005
Molybdenum-Dissolved (mg/L)	0.05	0.05	0.05
Molybdenum-Total (mg/L)	0.05	0.05	0.05
Nickel-Dissolved (mg/L)	0.23	0.17	0.20
Nickel-Total (mg/L)	0.23	0.17	0.20
Nitrogen, Nitrate as N (mg/L)	0.05	0.05	0.05
pH	4.58	4.4	4.49
Polonium 210-Dissolved (pCi/L)	0.5	0	0.3
Polonium 210-Suspended (pCi/L)	0.5	0.5	0.5
Polonium 210-Total (pCi/L)	2.5	0.5	1.5
Potassium-Dissolved (mg/L)	35	16	26
Potassium-Total (mg/L)		17.9	17.9
Radium 226-Dissolved (pCi/L)	4.5	2.6	3.6
Radium 226-Suspended (pCi/L)	0.1	-0.09	0.01
Radium 226-Total (pCi/L)	4	2.5	3.3
Selenium-Dissolved (mg/L)	0.0005	0.0025	0.0015
Selenium-IV-Dissolved (mg/L)	0.0005	0.0005	0.0005
Selenium-IV-Total (mg/L)	0.0005	0.0005	0.0005
Selenium-Total (mg/L)	0.0005	0.0005	0.0005
Selenium-VI-Dissolved (mg/L)	0.0005	0.0005	0.0005
Selenium-VI-Total (mg/L)	0.0005	0.0005	0.0005
Silica-Dissolved (mg/L)	7.5	2.1	4.8
Silica-Total (mg/L)		3.8	3.8
Silver-Dissolved (mg/L)	0.0025	0.0025	0.0025
Silver-Total (mg/L)	0.0025	0.0025	0.0025
Sodium Adsorption Ratio (SAR) (meq/L)	0.15	0.05	0.10
Sodium-Dissolved (mg/L)	8.2	4	6.1
Sodium-Total (mg/L)		5	5
Solids-Suspended Sediment SSC (mg/L)	2.5	37	19.8
Solids-Total Dissolved Calculated (mg/L)	851	716	784
Solids-Total Dissolved TDS (mg/L)	970	820	895
Solids-Total Suspended TSS (mg/L)	6	26	16
Sulfate (mg/L)	699	510	605
TDS Balance (0.80 - 1.20) (dec.%)	1.14	1.15	1.15
Thorium 230-Dissolved (pCi/L)	0.1	0.0	0.1
Thorium 230-Suspended (pCi/L)	1.3	0.4	0.9
Thorium 230-Total (pCi/L)	0.1	0.3	0.2
Thorium 232-Dissolved (mg/L)	0.0025	0.0025	0.0025
Thorium 232-Suspended (mg/L)	0.0005	0.0005	0.0005
Thorium 232-Total (mg/L)	0.0025	0.0025	0.0025
Uranium-Dissolved (mg/L)	0.0014	0.0023	0.0019
Uranium-Suspended (mg/L)	0.0008	0.0004	0.0006
Uranium-Total (mg/L)	0.0014	0.0031	0.0023
Vanadium-Dissolved (mg/L)	0.05	0.05	0.05
Vanadium-Total (mg/L)	0.05	0.20	0.13
Zinc-Dissolved (mg/L)	0.16	0.10	0.13

POWERTECH (USA) INC.

SUB03			
Parameters	11/12/2007	6/18/2008	Average
Zinc-Total (mg/L)	0.17	0.08	0.13

POWERTECH (USA) INC.

Water Quality Data from SUB04

SUB04			
Parameters	11/12/2007	6/17/2008	Average
A/C Balance (± 5) (%)	-0.902	2.01	0.55
Alkalinity-Total as CaCO3 (mg/L)	2.5	2.5	2.5
Aluminum-Dissolved (mg/L)	1.2	0.4	0.8
Aluminum-Total (mg/L)	1.5	0.5	1.0
Ammonia (mg/L)	0.3	0.05	0.18
Anions (meq/L)	22.3	6.13	14.2
Arsenic-Dissolved (mg/L)	0.0005	0.0005	0.0005
Arsenic-Total (mg/L)	0.0005	0.001	0.001
Bacteria, Fecal Coliform (cfu/100ml)	1	1	1
Barium-Dissolved (mg/L)	0.05	0.05	0.05
Barium-Total (mg/L)	0.05	0.05	0.05
Bicarbonate as HCO3 (mg/L)	2.5	2.5	2.5
Boron-Dissolved (mg/L)	0.1	0.05	0.08
Boron-Total (mg/L)	0.05	0.05	0.05
Cadmium-Dissolved (mg/L)	0.008	0.0025	0.005
Cadmium-Total (mg/L)	0.008	0.0025	0.005
Calcium-Dissolved (mg/L)	201	64.8	133
Calcium-Total (mg/L)		61.7	61.7
Carbonate as CO3 (mg/L)	2.5	2.5	2.5
Cations (meq/L)	21.9	6.39	14.15
Chloride (mg/L)	18	2	10
Chromium-Dissolved (mg/L)	0.005	0.005	0.005
Chromium-Hexavalent (mg/L)	0.025	0.0025	0.0138
Chromium-Total (mg/L)	0.025	0.025	0.025
Chromium-Trivalent (mg/L)	0.005	0.005	0.005
Conductivity @ 25 C (umhos/cm)	1650	692	1171
Copper-Dissolved (mg/L)	0.005	0.005	0.005
Copper-Total (mg/L)	0.005	0.005	0.005
Fluoride (mg/L)	0.6	0.4	0.5
Gross Alpha-Total (pCi/L)	13.6	3	8.3
Gross Beta-Total (pCi/L)	51.3	13	32.2
Gross Gamma-Total (pCi/L)	10	0	5
Iron-Dissolved (mg/L)	1.48	0.015	0.748
Iron-Total (mg/L)	3.73	0.18	1.96
Lead 210-Dissolved (pCi/L)	0.5	-2.1	-0.8
Lead 210-Suspended (pCi/L)	0.5	6.7	3.6
Lead 210-Total (pCi/L)	0.5	3	1.8
Lead-Dissolved (mg/L)	0.001	0.0005	0.0008
Lead-Total (mg/L)	0.0005	0.0005	0.0005
Magnesium-Dissolved (mg/L)	99.5	27.3	63.4
Magnesium-Total (mg/L)		26.8	26.8
Manganese-Dissolved (mg/L)	20.4	5.2	12.8
Manganese-Total (mg/L)	21.3	5.18	13.2
Mercury-Dissolved (mg/L)	0.0005	0.0005	0.0005

POWERTECH (USA) INC.

SUB04			
Parameters	11/12/2007	6/17/2008	Average
Mercury-Total (mg/L)	0.0005	0.00005	0.00028
Molybdenum-Dissolved (mg/L)	0.05	0.05	0.05
Molybdenum-Total (mg/L)	0.05	0.05	0.05
Nickel-Dissolved (mg/L)	0.43	0.09	0.26
Nickel-Total (mg/L)	0.44	0.1	0.27
Nitrogen, Nitrate as N (mg/L)	0.05	0.05	0.05
pH	4.65	4.89	4.77
Polonium 210-Dissolved (pCi/L)	2.2	0.2	1.2
Polonium 210-Suspended (pCi/L)	0.5	0.2	0.4
Polonium 210-Total (pCi/L)	3.4	0.4	1.9
Potassium-Dissolved (mg/L)	46	14	30
Potassium-Total (mg/L)		14.7	14.7
Radium 226-Dissolved (pCi/L)	3.4	3.1	3.3
Radium 226-Suspended (pCi/L)	0.1	-0.4	-0.2
Radium 226-Total (pCi/L)	3.5	2.7	3.1
Selenium-Dissolved (mg/L)	0.0005	0.0025	0.0015
Selenium-IV-Dissolved (mg/L)	0.0005	0.0005	0.0005
Selenium-IV-Total (mg/L)	0.0005	0.0005	0.0005
Selenium-Total (mg/L)	0.0005	0.001	0.0008
Selenium-VI-Dissolved (mg/L)	0.0005	0.0005	0.0005
Selenium-VI-Total (mg/L)	0.0005	0.001	0.0008
Silica-Dissolved (mg/L)	16.2	3.7	10.0
Silica-Total (mg/L)		3.9	3.9
Silver-Dissolved (mg/L)	0.0025	0.0025	0.0025
Silver-Total (mg/L)	0.0025	0.0025	0.0025
Sodium Adsorption Ratio (SAR) (meq/L)	0.25	0.05	0.15
Sodium-Dissolved (mg/L)	17.1	2.9	10.0
Sodium-Total (mg/L)		3	3
Solids-Suspended Sediment SSC (mg/L)	12	2.5	7.3
Solids-Total Dissolved Calculated (mg/L)	1450	412	931
Solids-Total Dissolved TDS (mg/L)	1700	450	1075
Solids-Total Suspended TSS (mg/L)	23	2.5	12.8
Sulfate (mg/L)	1200	291	746
TDS Balance (0.80 - 1.20) (dec.%)	1.18	1.08	1.13
Thorium 230-Dissolved (pCi/L)	0.9	0	0.5
Thorium 230-Suspended (pCi/L)	0.5	0.2	0.4
Thorium 230-Total (pCi/L)	0.1	0.2	0.2
Thorium 232-Dissolved (mg/L)	0.0025	0.0025	0.0025
Thorium 232-Suspended (mg/L)	0.0005	0.0005	0.0005
Thorium 232-Total (mg/L)	0.0025	0.0025	0.0025
Uranium-Dissolved (mg/L)	0.0021	0.0006	0.0014
Uranium-Suspended (mg/L)	0.0014	0.00015	0.0008
Uranium-Total (mg/L)	0.0024	0.0007	0.0016
Vanadium-Dissolved (mg/L)	0.05	0.05	0.05
Vanadium-Total (mg/L)	0.05	0.05	0.05
Zinc-Dissolved (mg/L)	0.37	0.07	0.22

POWERTECH (USA) INC.

SUB04			
Parameters	11/12/2007	6/17/2008	Average
Zinc-Total (mg/L)	0.41	0.06	0.24

POWERTECH (USA) INC.

Water Quality Data from SUB06

SUB06					
Parameters	9/27/2007	11/27/2007	2/10/2008	6/23/2008	Average
A/C Balance (± 5) (%)	2.82	-0.01	-2.74	3.85	0.98
Alkalinity-Total as CaCO3 (mg/L)	82	2.5	2.5	2.5	22.4
Aluminum-Dissolved (mg/L)	134	131	162	64.4	123
Aluminum-Total (mg/L)	160	0.05	166	62.8	97.2
Ammonia (mg/L)		3.4	4.5	2	3.3
Anions (meq/L)	119	119	154	66.6	114.7
Arsenic-Dissolved (mg/L)	0.003	0.004	0.004	0.002	0.003
Arsenic-Total (mg/L)	0.0015	0.003	0.004	0.002	0.003
Bacteria, Fecal Coliform (cfu/100ml)	1	1	1	1	1
Barium-Dissolved (mg/L)	0.05	0.05	0.05	0.05	0.05
Barium-Total (mg/L)	0.05	0.05	0.05	0.05	0.05
Bicarbonate as HCO3 (mg/L)	100	2.5	2.5	2.5	26.9
Boron-Dissolved (mg/L)	0.6	0.05	0.05	0.2	0.23
Boron-Total (mg/L)	0.7	0.05	0.05	0.2	0.25
Cadmium-Dissolved (mg/L)	0.026	0.026	0.036	0.015	0.026
Cadmium-Total (mg/L)	0.03	0.027	0.031	0.019	0.027
Calcium-Dissolved (mg/L)	512	471	534	328	461
Calcium-Total (mg/L)			571	330	451
Carbonate as CO3 (mg/L)	2.5	2.5	2.5	2.5	2.5
Cations (meq/L)	126	119	145	72	116
Chloride (mg/L)	10	7	10	5	8
Chromium-Dissolved (mg/L)	0.005	0.005	0.025	0.01	0.011
Chromium-Hexavalent (mg/L)	0.025	0.01	0.005	0.0025	0.0106
Chromium-Total (mg/L)	0.025	0.025	0.025	0.025	0.025
Chromium-Trivalent (mg/L)	0.005	0.005	0.005	0.005	0.005
Conductivity @ 25 C (umhos/cm)	6210	6390	7640	4110	6088
Copper-Dissolved (mg/L)	0.11	0.1	0.13	0.07	0.10
Copper-Total (mg/L)	0.14	0.1	0.13	0.06	0.11
Fluoride (mg/L)	3.7	5.5	7.4	3.9	5.1
Gross Alpha-Total (pCi/L)	3070	6780	8750	3570	5543
Gross Beta-Total (pCi/L)	2500	3200	3600	1200	2625
Gross Gamma-Total (pCi/L)	10	264	675	0	237
Iron-Dissolved (mg/L)	4.28	5.74	7.35	1.88	4.81
Iron-Total (mg/L)	4.66	5.93	8.22	2.19	5.25
Lead 210-Dissolved (pCi/L)	0.5	0.5		-0.6	0.1
Lead 210-Suspended (pCi/L)	0.5	0.5		3.7	1.6
Lead 210-Total (pCi/L)		0.5		3.1	1.8
Lead-Dissolved (mg/L)	0.001	0.001	0.001	0.0005	0.001
Lead-Total (mg/L)	0.0015	0.001	0.001	0.011	0.004
Magnesium-Dissolved (mg/L)	771	707	878	436	698
Magnesium-Total (mg/L)			930	439	685
Manganese-Dissolved (mg/L)	223	249	299	133	226
Manganese-Total (mg/L)	215	246	317	0.06	195
Mercury-Dissolved (mg/L)	0.0005	0.0005	0.0005	0.0005	0.0005
Mercury-Total (mg/L)	0.0005	0.0005	0.0005	0.00005	0.0004

POWERTECH (USA) INC.

SUB06					
Parameters	9/27/2007	11/27/2007	2/10/2008	6/23/2008	Average
Molybdenum-Dissolved (mg/L)	0.05	0.05	0.05	0.05	0.05
Molybdenum-Total (mg/L)	0.05	0.05	0.05	0.05	0.05
Nickel-Dissolved (mg/L)	5.07	5.58	6.45	3.01	5.03
Nickel-Total (mg/L)	6.53	0.025	6.14	3.03	3.93
Nitrogen, Nitrate as N (mg/L)	0.4	0.4	0.4	0.6	0.5
pH	3.22	3.2	3.19	3.52	3.28
Polonium 210-Dissolved (pCi/L)	0.5	1.7		0.3	0.8
Polonium 210-Suspended (pCi/L)	4.5	1.4		0.4	2.1
Polonium 210-Total (pCi/L)		3.1		0.7	1.9
Potassium-Dissolved (mg/L)	27	29	35	17	27
Potassium-Total (mg/L)			37.1	17.7	27.4
Radium 226-Dissolved (pCi/L)	4.3		2.2	2.2	2.9
Radium 226-Suspended (pCi/L)	0.1	0.1	1	-0.2	0.3
Radium 226-Total (pCi/L)		2	1.8	2	1.9
Selenium-Dissolved (mg/L)	0.035	0.014	0.017	0.009	0.019
Selenium-IV-Dissolved (mg/L)		0.0005	0.0005	0.0005	0.0005
Selenium-IV-Total (mg/L)	0.0005	0.0005	0.0005	0.0005	0.0005
Selenium-Total (mg/L)	0.013	0.013	0.016	0.008	0.013
Selenium-VI-Dissolved (mg/L)		0.014	0.002	0.009	0.008
Selenium-VI-Total (mg/L)	0.013	0.013	0.016	0.008	0.013
Silica-Dissolved (mg/L)	30	34.1	37.2	10.2	27.9
Silica-Total (mg/L)			41.5	11.4	26.5
Silver-Dissolved (mg/L)	0.0025	0.0025	0.0025	0.0025	0.0025
Silver-Total (mg/L)	0.0025	0.0025	0.0025	0.0025	0.0025
Sodium Adsorption Ratio (SAR) (meq/L)		0.59	0.7	0.44	0.58
Sodium-Dissolved (mg/L)	88	86.1	113	52	84.8
Sodium-Total (mg/L)			115	54	84.5
Solids-Suspended Sediment SSC (mg/L)	10	2.5	14	8	8.6
Solids-Total Dissolved Calculated (mg/L)	7090	7020	8910	4050	6768
Solids-Total Dissolved TDS (mg/L)	8100	8600	6800	4500	7000
Solids-Total Suspended TSS (mg/L)	5	5	10	14	9
Sulfate (mg/L)	5030	5700	7330	3180	5310
TDS Balance (0.80 - 1.20) (dec.%)	1.14	1.23	0.77	1.12	1.07
Thorium 230-Dissolved (pCi/L)	23.8	27.8	25.2	6.3	20.8
Thorium 230-Suspended (pCi/L)	0.1	1	0.1	0.2	0.4
Thorium 230-Total (pCi/L)		28.8	31.1	6.5	22.1
Thorium 232-Dissolved (mg/L)	0.011	0.01	0.013	0.0025	0.0091
Thorium 232-Suspended (mg/L)	0.0005	0.0005	0.0005	0.0005	0.0005
Thorium 232-Total (mg/L)	0.01	0.01	0.013	0.005	0.010
Uranium-Dissolved (mg/L)	5.29	5.84	7.84	3.22	5.55
Uranium-Suspended (mg/L)	0.0013	0.0013	0.0019	0.0015	0.0015
Uranium-Total (mg/L)	7.38	5.83	6.73	3.61	5.89
Vanadium-Dissolved (mg/L)	0.05	0.05	0.05	0.05	0.05
Vanadium-Total (mg/L)	0.05	0.05	0.05	0.05	0.05
Zinc-Dissolved (mg/L)	4.31	4.45	6.58	2.99	4.58
Zinc-Total (mg/L)	5.55	4.46	7.22	2.92	5.04

POWERTECH (USA) INC.

Water Quality Data from SUB07

SUB07					
Parameters	9/27/2007	11/12/2007	3/24/2008	6/23/2008	Average
A/C Balance (± 5) (%)	2.11	-1.25	-3.45	-16.2	-4.70
Alkalinity-Total as CaCO3 (mg/L)	2.5	2.5	2.5	2.5	2.5
Aluminum-Dissolved (mg/L)	1.1	0.5	0.2	0.1	0.5
Aluminum-Total (mg/L)	1.7	0.6	0.4	0.8	0.9
Ammonia (mg/L)		2.4	2.4	0.2	1.7
Anions (meq/L)	10.4	6.18	3.95	3.59	6.03
Arsenic-Dissolved (mg/L)	0.001	0.0005	0.0005	0.0005	0.0006
Arsenic-Total (mg/L)	0.001	0.0005	0.0005	0.002	0.001
Bacteria, Fecal Coliform (cfu/100ml)	1	1	1	1	1
Barium-Dissolved (mg/L)	0.05	0.05	0.05	0.05	0.05
Barium-Total (mg/L)	0.05	0.05	0.05	0.05	0.05
Bicarbonate as HCO3 (mg/L)	2.5	2.5	2.5	2.5	2.5
Boron-Dissolved (mg/L)	0.2	0.05	0.05	0.05	0.09
Boron-Total (mg/L)	0.3	0.05	0.05	0.05	0.11
Cadmium-Dissolved (mg/L)	0.0025	0.0025	0.0025	0.0025	0.0025
Cadmium-Total (mg/L)	0.0025	0.0025	0.0025	0.0025	0.0025
Calcium-Dissolved (mg/L)	80	45.6	27.6	21.6	43.7
Calcium-Total (mg/L)			27	22.6	24.8
Carbonate as CO3 (mg/L)	2.5	2.5	2.5	2.5	2.5
Cations (meq/L)	10.8	6.03	3.69	2.59	5.78
Chloride (mg/L)	10	7	4	2	6
Chromium-Dissolved (mg/L)	0.005	0.005	0.005	0.005	0.005
Chromium-Hexavalent (mg/L)	0.0025	0.01	0.025	0.0025	0.01
Chromium-Total (mg/L)	0.025	0.025	0.025	0.025	0.025
Chromium-Trivalent (mg/L)	0.005	0.005	0.005	0.005	0.005
Conductivity @ 25 C (umhos/cm)	972	610	402	283	567
Copper-Dissolved (mg/L)	0.01	0.005	0.005	0.005	0.006
Copper-Total (mg/L)	0.02	0.005	0.005	0.005	0.009
Fluoride (mg/L)	0.2	0.2	0.2	0.2	0.2
Gross Alpha-Total (pCi/L)	5.3	5.1	1.9	5.8	4.5
Gross Beta-Total (pCi/L)	33.1	25.8	13.4	12.1	21.1
Gross Gamma-Total (pCi/L)	10	1290	10	0	328
Iron-Dissolved (mg/L)	0.44	0.48	1.58	0.11	0.65
Iron-Total (mg/L)	1.6	0.58	1.67	1.47	1.33
Lead 210-Dissolved (pCi/L)	0.5	0.5		-1.4	-0.1
Lead 210-Suspended (pCi/L)	0.65	0.5		0.6	0.6
Lead 210-Total (pCi/L)		0.5		-0.8	-0.2
Lead-Dissolved (mg/L)	0.003	0.004	0.0005	0.0005	0.002
Lead-Total (mg/L)	0.003	0.001	0.0005	0.013	0.004
Magnesium-Dissolved (mg/L)	49	26.3	16.4	12.2	26.0
Magnesium-Total (mg/L)			16	12.7	14.4
Manganese-Dissolved (mg/L)	8.21	5.54	2.85	1.98	4.65
Manganese-Total (mg/L)	9.04	5.55	2.76	2.03	4.85
Mercury-Dissolved (mg/L)	0.0005	0.0005	0.0005	0.0005	0.0005
Mercury-Total (mg/L)	0.0005	0.0005	0.00005	0.00005	0.0003

POWERTECH (USA) INC.

Parameters	SUB07 9/27/2007	11/12/2007	3/24/2008	6/23/2008	Average
Molybdenum-Dissolved (mg/L)	0.05	0.05	0.05	0.05	0.05
Molybdenum-Total (mg/L)	0.05	0.05	0.05	0.05	0.05
Nickel-Dissolved (mg/L)	0.17	0.12	0.06	0.03	0.10
Nickel-Total (mg/L)	0.17	0.12	0.07	0.025	0.10
Nitrogen, Nitrate as N (mg/L)	0.05	0.2	0.4	0.2	0.21
pH	3.81	4.12	4.16	4.97	4.27
Polonium 210-Dissolved (pCi/L)	0.5	1.8		0.4	0.9
Polonium 210-Suspended (pCi/L)	0.65	0.5		0.9	0.7
Polonium 210-Total (pCi/L)		1.3		1.3	1.3
Potassium-Dissolved (mg/L)	38	27	14	10	22.3
Potassium-Total (mg/L)			13.7	10.7	12.2
Radium 226-Dissolved (pCi/L)	0.8	0.7	0.4	-0.02	0.47
Radium 226-Suspended (pCi/L)	0.15	0.1	0.5	-0.4	0.09
Radium 226-Total (pCi/L)		0.5	0.8	-0.38	0.31
Selenium-Dissolved (mg/L)	0.0005	0.0005	0.0005	0.0025	0.001
Selenium-IV-Dissolved (mg/L)		0.0005	0.0005	0.0005	0.0005
Selenium-IV-Total (mg/L)	0.0005	0.0005	0.0005	0.0005	0.0005
Selenium-Total (mg/L)	0.0005	0.0005	0.0005	0.0005	0.0005
Selenium-VI-Dissolved (mg/L)		0.0005	0.0005	0.0005	0.0005
Selenium-VI-Total (mg/L)	0.0005	0.0005	0.0005	0.0005	0.0005
Silica-Dissolved (mg/L)	0.5	0.25	1.4	2.8	1.2
Silica-Total (mg/L)			1.4	4.9	3.2
Silver-Dissolved (mg/L)	0.0025	0.0025	0.0025	0.0025	0.0025
Silver-Total (mg/L)	0.0025	0.0025	0.0025	0.0025	0.0025
Sodium Adsorption Ratio (SAR) (meq/L)		0.17	0.13	0.05	0.12
Sodium-Dissolved (mg/L)	10	6	3.4	2	5.4
Sodium-Total (mg/L)			3.5	2	2.8
Solids-Suspended Sediment SSC (mg/L)	17	16	2.5	26	15.4
Solids-Total Dissolved Calculated (mg/L)	682	399	254	225	390
Solids-Total Dissolved TDS (mg/L)	680	450	220	180	383
Solids-Total Suspended TSS (mg/L)	9	8	2.5	32	13
Sulfate (mg/L)	484	357	183	169	298
TDS Balance (0.80 - 1.20) (dec.%)	0.99	1.13	0.86	0.78	0.94
Thorium 230-Dissolved (pCi/L)	0.8	0.1	0.1	0	0.3
Thorium 230-Suspended (pCi/L)	0.15	0.9	0	0.2	0.3
Thorium 230-Total (pCi/L)		0.1	0.1	0.2	0.1
Thorium 232-Dissolved (mg/L)	0.0025	0.0025	0.0025	0.0025	0.0025
Thorium 232-Suspended (mg/L)	0.0005	0.0005	0.0005	0.0005	0.0005
Thorium 232-Total (mg/L)	0.0025	0.0025	0.0025	0.0025	0.0025
Uranium-Dissolved (mg/L)	0.0011	0.0004	0.00015	0.0024	0.0010
Uranium-Suspended (mg/L)	0.00015	0.00015	0.00015	0.00015	0.00015
Uranium-Total (mg/L)	0.0013	0.0004	0.0003	0.0006	0.0007
Vanadium-Dissolved (mg/L)	0.05	0.05	0.05	0.05	0.05
Vanadium-Total (mg/L)	0.05	0.05	0.05	0.1	0.06
Zinc-Dissolved (mg/L)	0.17	0.14	0.06	0.04	0.10
Zinc-Total (mg/L)	0.2	0.12	0.08	0.02	0.11

POWERTECH (USA) INC.

Water Quality Data from SUB08

SUB08					
Parameters	9/26/2007	11/27/2007	2/10/2008	6/23/2008	Average
A/C Balance (± 5) (%)	-0.475	0.414	6.26	3.86	2.51
Alkalinity-Total as CaCO3 (mg/L)	102	136	246	130	154
Aluminum-Dissolved (mg/L)		0.05	0.05	0.05	0.05
Aluminum-Total (mg/L)		0.05	0.05	0.3	0.1
Ammonia (mg/L)		0.05	0.4	0.05	0.2
Anions (meq/L)	37.6	36.4	43.5	18.6	34.0
Arsenic-Dissolved (mg/L)		0.0005	0.002	0.003	0.0018
Arsenic-Total (mg/L)	0.003	0.0005	0.002	0.004	0.0024
Bacteria, Fecal Coliform (cfu/100ml)	4	2	1	12	4.8
Barium-Dissolved (mg/L)		0.05	0.05	0.05	0.05
Barium-Total (mg/L)	0.05	0.05	0.05	0.05	0.05
Bicarbonate as HCO3 (mg/L)	90	166	300	149	176
Boron-Dissolved (mg/L)		0.5	0.7	0.4	0.5
Boron-Total (mg/L)	0.48	0.5	0.7	0.4	0.5
Cadmium-Dissolved (mg/L)		0.0025	0.0025	0.0025	0.0025
Cadmium-Total (mg/L)	0.0025	0.0025	0.0025	0.0025	0.0025
Calcium-Dissolved (mg/L)		134	186	79.4	133
Calcium-Total (mg/L)	102		181	83.1	122
Carbonate as CO3 (mg/L)	17	2.5	2.5	2.5	6.1
Cations (meq/L)	37.2	36.7	49.3	20.1	35.8
Chloride (mg/L)	34	26	42	14	29
Chromium-Dissolved (mg/L)		0.005	0.025	0.005	0.012
Chromium-Hexavalent (mg/L)		0.0025	0.008	0.0025	0.0043
Chromium-Total (mg/L)	0.025	0.025	0.025	0.025	0.025
Chromium-Trivalent (mg/L)		0.005	0.005	0.005	0.005
Conductivity @ 25 C (umhos/cm)	3630	3160	4180	1800	3193
Copper-Dissolved (mg/L)		0.005	0.005	0.005	0.005
Copper-Total (mg/L)	0.005	0.005	0.005	0.005	0.005
Fluoride (mg/L)	0.4	0.4	0.4	0.5	0.4
Gross Alpha-Total (pCi/L)	0.5	4.8	12.2	14.1	7.9
Gross Beta-Total (pCi/L)	14	9.7	13.9	11.9	12.4
Gross Gamma-Total (pCi/L)		10	10	0	6.7
Iron-Dissolved (mg/L)		0.015	0.03	0.04	0.03
Iron-Total (mg/L)	0.11	0.1	0.34	0.53	0.27
Lead 210-Dissolved (pCi/L)	0.5	4.6		1.9	2.3
Lead 210-Suspended (pCi/L)	0.5	0.5		3.4	1.5
Lead 210-Total (pCi/L)	0.5	4.6		5.3	3.5
Lead-Dissolved (mg/L)		0.0005	0.0005	0.0005	0.0005
Lead-Total (mg/L)	0.0005	0.0005	0.0005	0.013	0.0036
Magnesium-Dissolved (mg/L)		55.9	78.8	31.5	55.4
Magnesium-Total (mg/L)	60		78.3	33.5	57.3
Manganese-Dissolved (mg/L)		0.09	0.37	0.01	0.16
Manganese-Total (mg/L)	0.01	0.05	0.37	0.06	0.12
Mercury-Dissolved (mg/L)		0.0005	0.0005	0.0005	0.0005
Mercury-Total (mg/L)	0.0005	0.0005	0.0005	0.00005	0.0004

POWERTECH (USA) INC.

SUB08					
Parameters	9/26/2007	11/27/2007	2/10/2008	6/23/2008	Average
Molybdenum-Dissolved (mg/L)		0.05	0.05	0.05	0.05
Molybdenum-Total (mg/L)	0.05	0.05	0.05	0.05	0.05
Nickel-Dissolved (mg/L)		0.005	0.025	0.005	0.012
Nickel-Total (mg/L)	0.025	0.025	0.025	0.025	0.025
Nitrogen, Nitrate as N (mg/L)	0.05	0.2	0.05	0.05	0.09
pH	9.37	7.59	7.54	8.92	8.36
Polonium 210-Dissolved (pCi/L)	0.5	0.5		0.0	0.3
Polonium 210-Suspended (pCi/L)	0.5	2.3		0.2	1.0
Polonium 210-Total (pCi/L)	0.5	2.3		0.2	1.0
Potassium-Dissolved (mg/L)		13	17	11	13.7
Potassium-Total (mg/L)	14		16.1	11.5	13.9
Radium 226-Dissolved (pCi/L)	0.1		0.1	-0.1	0.03
Radium 226-Suspended (pCi/L)	0.1	0.1	1.2	-0.4	0.3
Radium 226-Total (pCi/L)	0.1	0.5	0.4	-0.52	0.12
Selenium-Dissolved (mg/L)		0.0005	0.0005	0.0025	0.0012
Selenium-IV-Dissolved (mg/L)		0.0005	0.0005	0.0005	0.0005
Selenium-IV-Total (mg/L)		0.0005	0.0005	0.0005	0.0005
Selenium-Total (mg/L)	0.001	0.0005	0.0005	0.0005	0.0006
Selenium-VI-Dissolved (mg/L)		0.0005	0.0005	0.0005	0.0005
Selenium-VI-Total (mg/L)		0.0005	0.0005	0.0005	0.0005
Silica-Dissolved (mg/L)		7	9.9	0.25	5.7
Silica-Total (mg/L)	0.5		11	0.8	4.1
Silver-Dissolved (mg/L)		0.0025	0.0025	0.0025	0.0025
Silver-Total (mg/L)	0.0025	0.0025	0.0025	0.0025	0.0025
Sodium Adsorption Ratio (SAR) (meq/L)		11	12	7.3	10.1
Sodium-Dissolved (mg/L)		576	759	304	546
Sodium-Total (mg/L)	618		789	324	577
Solids-Suspended Sediment SSC (mg/L)	2.5	11	66	13	23
Solids-Total Dissolved Calculated (mg/L)	2550	2470	3020	1270	2328
Solids-Total Dissolved TDS (mg/L)	2800	2600	3400	1300	2525
Solids-Total Suspended TSS (mg/L)	2.5	2.5	14	7	6.5
Sulfate (mg/L)	1880	1580	1790	747	1499
TDS Balance (0.80 - 1.20) (dec.%)	1.11	1.05	1.12	0.99	1.07
Thorium 230-Dissolved (pCi/L)	0.1	0.1	0.1	0.0	0.1
Thorium 230-Suspended (pCi/L)	0.1	0.1	0.1	0.0	0.1
Thorium 230-Total (pCi/L)	0.1	0.1	0.6	0.1	0.2
Thorium 232-Dissolved (mg/L)		0.0025	0.0025	0.0025	0.0025
Thorium 232-Suspended (mg/L)	0.0005	0.0005	0.0005	0.0005	0.0005
Thorium 232-Total (mg/L)	0.0025	0.0025	0.0025	0.0025	0.0025
Uranium-Dissolved (mg/L)	0.0017	0.0028	0.0025	0.0026	0.0024
Uranium-Suspended (mg/L)	0.00015	0.001	0.00015	0.00015	0.0004
Uranium-Total (mg/L)	0.0017	0.002	0.0023	0.0016	0.0019
Vanadium-Dissolved (mg/L)		0.05	0.05	0.05	0.05
Vanadium-Total (mg/L)	0.05	0.05	0.05	0.10	0.06
Zinc-Dissolved (mg/L)		0.02	0.02	0.005	0.015
Zinc-Total (mg/L)	0.005	0.005	0.02	0.005	0.0088

POWERTECH (USA) INC.

Water Quality Data from SUB09

SUB09			
Parameters	3/24/2008	6/23/2008	Average
A/C Balance (± 5) (%)	0.04	3.63	1.84
Alkalinity-Total as CaCO3 (mg/L)	28	80	54
Aluminum-Dissolved (mg/L)	0.05	0.2	0.13
Aluminum-Total (mg/L)	4.8	42.8	23.8
Ammonia (mg/L)	0.05	0.80	0.43
Anions (meq/L)	2.82	2.36	2.59
Arsenic-Dissolved (mg/L)	0.001	0.002	0.002
Arsenic-Total (mg/L)	0.002	0.017	0.010
Bacteria, Fecal Coliform (cfu/100ml)	2	190	96
Barium-Dissolved (mg/L)	0.05	0.05	0.05
Barium-Total (mg/L)	0.05	0.2	0.13
Bicarbonate as HCO3 (mg/L)	34	98	66
Boron-Dissolved (mg/L)	0.1	0.1	0.1
Boron-Total (mg/L)	0.1	0.2	0.2
Cadmium-Dissolved (mg/L)	0.0025	0.0025	0.0025
Cadmium-Total (mg/L)	0.0025	0.0025	0.0025
Calcium-Dissolved (mg/L)	18.2	17.4	17.8
Calcium-Total (mg/L)	19.1	22.6	20.9
Carbonate as CO3 (mg/L)	2.5	2.5	2.5
Cations (meq/L)	2.82	2.54	2.68
Chloride (mg/L)	8	4	6
Chromium-Dissolved (mg/L)	0.005	0.005	0.005
Chromium-Hexavalent (mg/L)	0.005	0.0025	0.0038
Chromium-Total (mg/L)	0.025	0.05	0.038
Chromium-Trivalent (mg/L)	0.005	0.05	0.028
Conductivity @ 25 C (umhos/cm)	297	249	273
Copper-Dissolved (mg/L)	0.005	0.005	0.005
Copper-Total (mg/L)	0.01	0.02	0.02
Fluoride (mg/L)	0.6	0.5	0.6
Gross Alpha-Total (pCi/L)	1.2	15.9	8.6
Gross Beta-Total (pCi/L)	14.7	20.6	17.7
Gross Gamma-Total (pCi/L)	10	0	5
Iron-Dissolved (mg/L)	0.04	0.21	0.13
Iron-Total (mg/L)	3.6	37	20.3
Lead 210-Dissolved (pCi/L)		-0.9	-0.9
Lead 210-Suspended (pCi/L)		4.5	4.5
Lead 210-Total (pCi/L)		3.6	3.6
Lead-Dissolved (mg/L)	0.0005	0.0005	0.0005
Lead-Total (mg/L)	0.004	0.045	0.025
Magnesium-Dissolved (mg/L)	11.1	10.3	10.7
Magnesium-Total (mg/L)	12.2	18.3	15.3
Manganese-Dissolved (mg/L)	0.005	0.08	0.043
Manganese-Total (mg/L)	0.02	0.23	0.13
Mercury-Dissolved (mg/L)	0.0005	0.0005	0.0005
Mercury-Total (mg/L)	0.00005	0.00005	0.00005

POWERTECH (USA) INC.

SUB09			
Parameters	3/24/2008	6/23/2008	Average
Molybdenum-Dissolved (mg/L)	0.05	0.05	0.05
Molybdenum-Total (mg/L)	0.05	0.05	0.05
Nickel-Dissolved (mg/L)	0.005	0.005	0.005
Nickel-Total (mg/L)	0.025	0.025	0.025
Nitrogen, Nitrate as N (mg/L)	0.05	0.3	0.18
pH	8.42	7.4	7.9
Polonium 210-Dissolved (pCi/L)		0	0
Polonium 210-Suspended (pCi/L)		0.9	0.9
Polonium 210-Total (pCi/L)		0.9	0.9
Potassium-Dissolved (mg/L)	15	13	14
Potassium-Total (mg/L)	17	24.9	21.0
Radium 226-Dissolved (pCi/L)	0.03	0.1	0.07
Radium 226-Suspended (pCi/L)	0.5	-0.06	0.22
Radium 226-Total (pCi/L)	0.5	0.04	0.27
Selenium-Dissolved (mg/L)	0.0005	0.0025	0.0015
Selenium-IV-Dissolved (mg/L)	0.0005	0.0005	0.0005
Selenium-IV-Total (mg/L)	0.0005	0.0005	0.0005
Selenium-Total (mg/L)	0.001	0.002	0.002
Selenium-VI-Dissolved (mg/L)	0.0005	0.0005	0.0005
Selenium-VI-Total (mg/L)	0.0005	0.002	0.0013
Silica-Dissolved (mg/L)	1.6	5.9	3.8
Silica-Total (mg/L)	19.5	73.4	46.5
Silver-Dissolved (mg/L)	0.0025	0.0025	0.0025
Silver-Total (mg/L)	0.0025	0.0025	0.0025
Sodium Adsorption Ratio (SAR) (meq/L)	0.62	0.42	0.52
Sodium-Dissolved (mg/L)	13.7	9	11.4
Sodium-Total (mg/L)	13.4	9	11
Solids-Suspended Sediment SSC (mg/L)	119	425	272
Solids-Total Dissolved Calculated (mg/L)	184	149	167
Solids-Total Dissolved TDS (mg/L)	250	280	265
Solids-Total Suspended TSS (mg/L)	100	190	145
Sulfate (mg/L)	95	28	62
TDS Balance (0.80 - 1.20) (dec.%)	1.37	1.87	1.62
Thorium 230-Dissolved (pCi/L)	0	0	0
Thorium 230-Suspended (pCi/L)	0.5	0.4	0.45
Thorium 230-Total (pCi/L)	0.5	0.5	0.5
Thorium 232-Dissolved (mg/L)	0.0025	0.0025	0.0025
Thorium 232-Suspended (mg/L)	0.001	0.005	0.003
Thorium 232-Total (mg/L)	0.0025	0.01	0.0063
Uranium-Dissolved (mg/L)	0.0005	0.0056	0.0031
Uranium-Suspended (mg/L)	0.0003	0.001	0.001
Uranium-Total (mg/L)	0.0008	0.0023	0.0016
Vanadium-Dissolved (mg/L)	0.05	0.05	0.05
Vanadium-Total (mg/L)	0.05	0.1	0.08
Zinc-Dissolved (mg/L)	0.005	0.01	0.008
Zinc-Total (mg/L)	0.02	0.11	0.065

POWERTECH (USA) INC.

Water Quality Data from SUB10

SUB10			
Parameters	3/24/2008	6/23/2008	Average
A/C Balance (± 5) (%)	6.52	5.17	5.85
Alkalinity-Total as CaCO3 (mg/L)	54	38	46
Aluminum-Dissolved (mg/L)	0.05	0.3	0.18
Aluminum-Total (mg/L)	3	35	19
Ammonia (mg/L)	0.05	0.3	0.18
Anions (meq/L)	27.1	3.73	15.42
Arsenic-Dissolved (mg/L)	0.0005	0.0005	0.0005
Arsenic-Total (mg/L)	0.002	0.01	0.006
Bacteria, Fecal Coliform (cfu/100ml)	4	170	87
Barium-Dissolved (mg/L)	0.05	0.05	0.05
Barium-Total (mg/L)	0.05	0.1	0.08
Bicarbonate as HCO3 (mg/L)	66	46	56
Boron-Dissolved (mg/L)	0.1	0.05	0.08
Boron-Total (mg/L)	0.05	0.1	0.08
Cadmium-Dissolved (mg/L)	0.0025	0.0025	0.0025
Cadmium-Total (mg/L)	0.0025	0.0025	0.0025
Calcium-Dissolved (mg/L)	248	34	141
Calcium-Total (mg/L)	255	39.6	147
Carbonate as CO3 (mg/L)	2.5	2.5	2.5
Cations (meq/L)	30.9	4.14	17.5
Chloride (mg/L)	32	3	18
Chromium-Dissolved (mg/L)	0.005	0.005	0.005
Chromium-Hexavalent (mg/L)	0.005	0.0025	0.0038
Chromium-Total (mg/L)	0.025	0.05	0.038
Chromium-Trivalent (mg/L)	0.005	0.05	0.028
Conductivity @ 25 C (umhos/cm)	2490	419	1455
Copper-Dissolved (mg/L)	0.005	0.005	0.005
Copper-Total (mg/L)	0.01	0.02	0.015
Fluoride (mg/L)	0.2	0.3	0.3
Gross Alpha-Total (pCi/L)	9	16.3	12.7
Gross Beta-Total (pCi/L)	36.5	22.1	29.3
Gross Gamma-Total (pCi/L)	10	0	5
Iron-Dissolved (mg/L)	0.015	0.14	0.078
Iron-Total (mg/L)	2.89	33.7	18.3
Lead 210-Dissolved (pCi/L)		0.1	0.1
Lead 210-Suspended (pCi/L)		5.2	5.2
Lead 210-Total (pCi/L)		5.3	5.3
Lead-Dissolved (mg/L)	0.0005	0.0005	0.0005
Lead-Total (mg/L)	0.003	0.039	0.021
Magnesium-Dissolved (mg/L)	103	14.5	58.8
Magnesium-Total (mg/L)	105	20.6	62.8
Manganese-Dissolved (mg/L)	0.02	0.04	0.03
Manganese-Total (mg/L)	0.04	0.35	0.20
Mercury-Dissolved (mg/L)	0.0005	0.0005	0.0005
Mercury-Total (mg/L)	0.00005	0.00005	0.00005

POWERTECH (USA) INC.

SUB10			
Parameters	3/24/2008	6/23/2008	Average
Molybdenum-Dissolved (mg/L)	0.05	0.05	0.05
Molybdenum-Total (mg/L)	0.05	0.05	0.05
Nickel-Dissolved (mg/L)	0.005	0.005	0.005
Nickel-Total (mg/L)	0.025	0.025	0.025
Nitrogen, Nitrate as N (mg/L)	0.05	0.6	0.33
pH	8.19	6.96	7.58
Polonium 210-Dissolved (pCi/L)		0	0
Polonium 210-Suspended (pCi/L)		1.1	1.1
Polonium 210-Total (pCi/L)		1.1	1.1
Potassium-Dissolved (mg/L)	41	13	27
Potassium-Total (mg/L)	42.3	23.1	32.7
Radium 226-Dissolved (pCi/L)	0.1	0.2	0.2
Radium 226-Suspended (pCi/L)	1.1	0.6	0.9
Radium 226-Total (pCi/L)	1.2	0.8	1.0
Selenium-Dissolved (mg/L)	0.0005	0.0025	0.0015
Selenium-IV-Dissolved (mg/L)	0.0005	0.0005	0.0005
Selenium-IV-Total (mg/L)	0.0005	0.0005	0.0005
Selenium-Total (mg/L)	0.0005	0.0005	0.0005
Selenium-VI-Dissolved (mg/L)	0.0005	0.0005	0.0005
Selenium-VI-Total (mg/L)	0.0005	0.0005	0.0005
Silica-Dissolved (mg/L)	0.25	4.3	2.28
Silica-Total (mg/L)	10.4	64.6	37.5
Silver-Dissolved (mg/L)	0.0025	0.0025	0.0025
Silver-Total (mg/L)	0.0025	0.0025	0.0025
Sodium Adsorption Ratio (SAR) (meq/L)	2.8	0.7	1.8
Sodium-Dissolved (mg/L)	208	19	114
Sodium-Total (mg/L)	209	19	114
Solids-Suspended Sediment SSC (mg/L)	195	737	466
Solids-Total Dissolved Calculated (mg/L)	1870	258	1064
Solids-Total Dissolved TDS (mg/L)	2100	410	1255
Solids-Total Suspended TSS (mg/L)	250	220	235
Sulfate (mg/L)	1210	135	673
TDS Balance (0.80 - 1.20) (dec.%)	1.1	1.59	1.35
Thorium 230-Dissolved (pCi/L)	0.1	0.1	0.1
Thorium 230-Suspended (pCi/L)	0.5	0.3	0.4
Thorium 230-Total (pCi/L)	0.6	0.5	0.6
Thorium 232-Dissolved (mg/L)	0.0025	0.0025	0.0025
Thorium 232-Suspended (mg/L)	0.003	0.005	0.004
Thorium 232-Total (mg/L)	0.0025	0.015	0.0088
Uranium-Dissolved (mg/L)	0.0027	0.0005	0.0016
Uranium-Suspended (mg/L)	0.0007	0.0008	0.0008
Uranium-Total (mg/L)	0.0033	0.0022	0.0028
Vanadium-Dissolved (mg/L)	0.05	0.05	0.05
Vanadium-Total (mg/L)	0.05	0.1	0.08
Zinc-Dissolved (mg/L)	0.005	0.01	0.008
Zinc-Total (mg/L)	0.01	0.09	0.05

POWERTECH (USA) INC.

Water Quality Data from SUB11

SUB11					
Parameters	9/27/2007	11/27/2007	3/24/2008	6/23/2008	Average
A/C Balance (± 5) (%)	-4.19	4.5	10.9	7.71	4.73
Alkalinity-Total as CaCO3 (mg/L)	122	56	18	6	51
Aluminum-Dissolved (mg/L)	0.7	0.05	0.2	0.3	0.31
Aluminum-Total (mg/L)	1.2	0.5	1.9	9.6	3.3
Ammonia (mg/L)		2.1	0.05	0.05	0.73
Anions (meq/L)	2.88	1.72	0.66	1.05	1.58
Arsenic-Dissolved (mg/L)	0.002	0.002	0.0005	0.001	0.0014
Arsenic-Total (mg/L)	0.006	0.005	0.004	0.005	0.005
Bacteria, Fecal Coliform (cfu/100ml)	14	12	1	20	12
Barium-Dissolved (mg/L)	0.05	0.05	0.05	0.05	0.05
Barium-Total (mg/L)	0.05	0.05	0.05	0.05	0.05
Bicarbonate as HCO3 (mg/L)	149	68	22	7	62
Boron-Dissolved (mg/L)	0.05	0.05	0.05	0.05	0.05
Boron-Total (mg/L)	0.1	0.05	0.05	0.05	0.06
Cadmium-Dissolved (mg/L)	0.0025	0.0025	0.0025	0.0025	0.0025
Cadmium-Total (mg/L)	0.0025	0.0025	0.0025	0.0025	0.0025
Calcium-Dissolved (mg/L)	22	14.8	6.3	11.2	13.6
Calcium-Total (mg/L)			6.7	12.3	9.5
Carbonate as CO3 (mg/L)	2.5	2.5	2.5	2.5	2.5
Cations (meq/L)	2.65	1.88	0.83	1.23	1.65
Chloride (mg/L)	4	2	1	0.5	1.9
Chromium-Dissolved (mg/L)	0.005	0.005	0.005	0.005	0.005
Chromium-Hexavalent (mg/L)	0.025	0.0025	0.005	0.0025	0.009
Chromium-Total (mg/L)	0.025	0.025	0.025	0.025	0.025
Chromium-Trivalent (mg/L)	0.005	0.005	0.005	0.005	0.005
Conductivity @ 25 C (umhos/cm)	202	188	68.7	131	147.4
Copper-Dissolved (mg/L)	0.005	0.005	0.005	0.005	0.005
Copper-Total (mg/L)	0.005	0.005	0.005	0.005	0.005
Fluoride (mg/L)	0.4	0.3	0.2	0.2	0.3
Gross Alpha-Total (pCi/L)	2.9	2	1.4	9.4	3.9
Gross Beta-Total (pCi/L)	10.6	9.1	5.8	10.4	9.0
Gross Gamma-Total (pCi/L)	10	1100	10	0	280
Iron-Dissolved (mg/L)	1.93	0.61	1.7	0.72	1.24
Iron-Total (mg/L)	0.015	31.8	15.7	21.4	17.2
Lead 210-Dissolved (pCi/L)	0.5	0.5		3.2	1.4
Lead 210-Suspended (pCi/L)	8.2	0.5		5	4.6
Lead 210-Total (pCi/L)		0.5		8.2	4.4
Lead-Dissolved (mg/L)	0.0005	0.0005	0.0005	0.0005	0.0005
Lead-Total (mg/L)	0.002	0.002	0.003	0.021	0.007
Magnesium-Dissolved (mg/L)	6	4.2	1.9	3.2	3.8
Magnesium-Total (mg/L)			2.1	4.3	3.2
Manganese-Dissolved (mg/L)	1.8	1.52	0.57	0.74	1.16
Manganese-Total (mg/L)	2.67	1.66	0.66	0.91	1.48
Mercury-Dissolved (mg/L)	0.0005	0.0005	0.0005	0.0005	0.0005
Mercury-Total (mg/L)	0.0005	0.0005	0.00005	0.00005	0.0003

POWERTECH (USA) INC.

SUB11					
Parameters	9/27/2007	11/27/2007	3/24/2008	6/23/2008	Average
Molybdenum-Dissolved (mg/L)	0.05	0.05	0.05	0.05	0.05
Molybdenum-Total (mg/L)	0.05	0.05	0.05	0.05	0.05
Nickel-Dissolved (mg/L)	0.03	0.005	0.005	0.005	0.011
Nickel-Total (mg/L)	0.025	0.025	0.025	0.025	0.025
Nitrogen, Nitrate as N (mg/L)	0.05	0.1	0.05	0.1	0.08
pH	7.04	6.41	6.68	5.96	6.52
Polonium 210-Dissolved (pCi/L)	0.5	0.5		-0.2	0.3
Polonium 210-Suspended (pCi/L)	1	1.8		1.1	1.3
Polonium 210-Total (pCi/L)		1.8		0.9	1.4
Potassium-Dissolved (mg/L)	13	11	4	6	9
Potassium-Total (mg/L)			5.2	9	7.1
Radium 226-Dissolved (pCi/L)	0.7		0.1	-0.1	0.2
Radium 226-Suspended (pCi/L)	0.2	0.1	0.8	-0.4	0.2
Radium 226-Total (pCi/L)		0.1	0.9	-0.51	0.2
Selenium-Dissolved (mg/L)	0.002	0.0005	0.0005	0.0025	0.0014
Selenium-IV-Dissolved (mg/L)		0.0005	0.0005	0.0005	0.0005
Selenium-IV-Total (mg/L)	0.0005	0.0005	0.0005	0.0005	0.0005
Selenium-Total (mg/L)	0.0005	0.0005	0.0005	0.0005	0.0005
Selenium-VI-Dissolved (mg/L)		0.0005	0.0005	0.0005	0.0005
Selenium-VI-Total (mg/L)	0.0005	0.0005	0.0005	0.0005	0.0005
Silica-Dissolved (mg/L)	8	7.1	0.8	2.6	4.6
Silica-Total (mg/L)			6.1	20.1	13.1
Silver-Dissolved (mg/L)	0.0025	0.0025	0.0025	0.0025	0.0025
Silver-Total (mg/L)	0.0025	0.0025	0.0025	0.0025	0.0025
Sodium Adsorption Ratio (SAR) (meq/L)		0.3	0.24	0.19	0.24
Sodium-Dissolved (mg/L)	6	5.1	2.7	3	4.2
Sodium-Total (mg/L)			1.9	2	2.0
Solids-Suspended Sediment SSC (mg/L)	72	120	77	189	115
Solids-Total Dissolved Calculated (mg/L)	155	97	42	79	93
Solids-Total Dissolved TDS (mg/L)	220	140	90	200	163
Solids-Total Suspended TSS (mg/L)	79	120	61	74	84
Sulfate (mg/L)	15	25	12	43	24
TDS Balance (0.80 - 1.20) (dec.%)	1.43	1.48	2.14	2.56	1.90
Thorium 230-Dissolved (pCi/L)	1.6	0.1	0.2	0	0.5
Thorium 230-Suspended (pCi/L)	0.2	3	0	0.1	0.8
Thorium 230-Total (pCi/L)		3	0.2	0.2	1.1
Thorium 232-Dissolved (mg/L)	0.0025	0.0025	0.0025	0.0025	0.0025
Thorium 232-Suspended (mg/L)	0.0005	0.001	0.0005	0.0005	0.0006
Thorium 232-Total (mg/L)	0.0025	0.0025	0.0025	0.0025	0.0025
Uranium-Dissolved (mg/L)	0.0336	0.0009	0.00015	0.00015	0.0087
Uranium-Suspended (mg/L)	0.0004	0.0017	0.0003	0.00015	0.0006
Uranium-Total (mg/L)	0.0004	0.0016	0.00015	0.0008	0.0007
Vanadium-Dissolved (mg/L)	0.05	0.05	0.05	0.05	0.05
Vanadium-Total (mg/L)	0.05	0.05	0.05	0.1	0.06
Zinc-Dissolved (mg/L)	0.04	0.03	0.005	0.03	0.026
Zinc-Total (mg/L)	0.02	0.005	0.01	0.03	0.02