# Official Transcript of Proceedings

# NUCLEAR REGULATORY COMMISSION

Title: 561st Meeting Advisory Committee on Reactor Safeguards

Docket Number: (n/a)

Location: Rockville, Maryland

Date: Thursday, April 2, 2009

Work Order No.: NRC-2757 Pages 1-275

**NEAL R. GROSS AND CO., INC.**
**Court Reporters and Transcribers**
**1323 Rhode Island Avenue, N.W.**
**Washington, D.C. 20005**
**(202) 234-4433**

# Vogtle Electric Generating Plant

**License Renewal ACRS**
**Committee Presentation**
**Mark Ajluni**
**April 2, 2009**

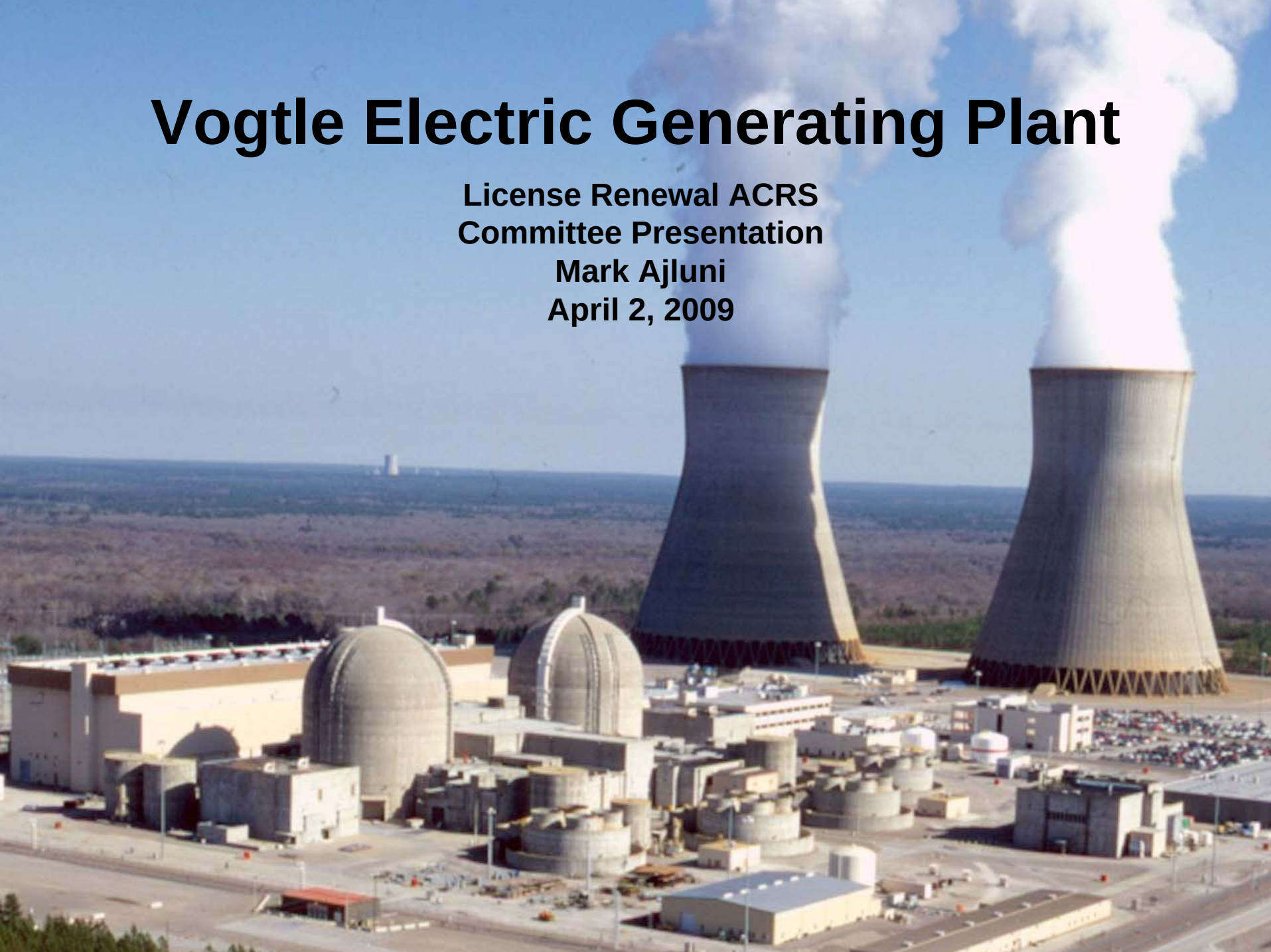

# Agenda

- Introductions
- VEGP Site Description
- Project Key Points
- Open Items
- Subcommittee Follow-Up Items
- Summation and Questions

# VEGP Representatives

- Tom Tynan, Site Vice President
- Lee Mansfield, Engineering Support Manager
- Mark Ajluni, Licensing Manager

# VEGP Site Description

- Westinghouse (NSSS), Bechtel (AE)
- Two 4 Loop PWR Units
  - 3625 MWt
  - 1250 MWe
- Ultimate Heat Sink – NSCW Forced Draft Cooling Towers and Basins
- Turbine Cycle Cooling Provided By Natural Draft Towers

# VEGP License Renewal Project Key Points

- 10 CFR 54.17(c) Exemption
  - NRC granted VEGP an exemption to 10 CFR 54.17(c) to submit Vogtle Unit 2 License Renewal Application prior to reaching 20 years remaining on the operating license
    - Basis: Unit 2 is the same design and construction as Unit 1

# VEGP License Renewal Project Key Points

- As a result of the aging management reviews, VEGP credited the following:
  - 38 Aging Management Programs
    - 9 existing programs with no change
    - 15 existing programs with enhancements
    - 14 new programs
  - 27 of the 38 are GALL Programs
    - Only minor exceptions
    - 11 plant specific programs incorporated GALL attributes where possible

# Open Item Resolution

- The VEGP Final SER for License Renewal has no Open or Confirmatory Items

# Subcommittee Follow-Up Items
# Containment Residue

- Region II Site Inspection performed walkdown of Boric Acid Corrosion Control Program during 1R14 (April 2008)
- Inspection concluded BACC Program would adequately manage boric acid corrosion
- However inspector noted non-boric acid deposits from NSCW leakage that could mask boric acid corrosion

# Subcommittee Follow-Up Items
# Containment Residue

# Subcommittee Follow-Up Items
# CNMT Residue Corrective Actions

- BACC Program procedure changes, training, and enhanced communication have been implemented to heighten awareness.
- Aggressive inspection, cleaning and repainting program is in progress – at power and during refueling outages.
- Tools developed to promptly identify and address leakage in containment.

# Subcommittee Follow-Up Items
# Containment Residue

016
NSCW
CNMT ELR
OUTLET
TEST CONN
A

# Subcommittee Follow-Up Items
# Containment Residue

- The valve on the preceding slide was discussed at the Subcommittee meeting
- The corrosion visible in the picture had been evaluated as minor surface corrosion that did not require remediation
- VEGP inspected and cleaned the valve. The initial evaluation was confirmed as correct.

# Subcommittee Follow-Up Items
# Water in Pullboxes

- Medium Voltage Cables
  - In scope medium voltage cables at VEGP are located in tunnels and not subject to submergence, with one exception
    - Non-safety related 4kV feeders to high voltage switchyard switch house
  - Region Inspection found water in pull box near switch house
  - Corrective action – accelerated implementation of the license renewal aging management program inspections
    - Quarterly inspection (later increased to monthly based on first two inspections)
    - Trending of results
  - Design changes initiated to add sump pumps to two boxes. Planned for installation in 2010.

# Subcommittee Follow-Up Items
# Aging Management of Boral

- VEGP Unit 1 spent fuel racks contain Boral™ neutron-absorbing panels. Unit 2 racks do not use Boral™.
- Our strategy monitors spent fuel pool aluminum concentration and monitors industry operating experience.
- To date, industry operating experience has not shown evidence of loss of neutron absorption in Boral™.
- SNC has committed to perform a baseline and a follow-up inspection to confirm the neutron-absorbing capacity of the Boral™ panels.

# Summary

- Experienced team created a high quality application
- Extensive use made of GALL
- Thorough audits and inspection of the application and programs
- VEGP responsive to NRC throughout review
- No Open or Confirmatory Items
- VEGP is confident that we are prepared to manage aging and continue to operate safely beyond 40 years

UNITED STATES OF AMERICA

+ + + + +

NUCLEAR REGULATORY COMMISSION

+ + + + +

ADVISORY COMMITTEE ON REACTOR SAFEGUARDS (ACRS)

+ + + + +

MEETING

+ + + + +

THURSDAY,

APRIL 2, 2009

+ + + + +

ROCKVILLE, MARYLAND

+ + + + +

The Advisory Committee convened in Room T2B3 in the Headquarters of the Nuclear Safety Regulatory Commission, Two White Flint North, 11545 Rockville Pike, Rockville, Maryland, at 8:30 a.m., Dr. Mario Bonaca, Chair, presiding.

MEMBERS PRESENT:

MARIO BONACA Chair

SAID ABDEL-KHALIK Vice Chair

J. SAM ARMIJO Member-at-Large

JOHN D. SIEBER Member

MICHAEL T. RYAN Member

MEMBERS PRESENT (CONTINUED):

SANJOY BANERJEE Member

DENNIS C. BLEY Member

JOHN W. STETKAR Member

WILLIAM J. SHACK Member

OTTO L. MAYNARD Member

CHARLES H. BROWN, JR. Member

HAROLD B. RAY Member

MICHAEL CORRADINI Member

GEORGE E. APOSTOLAKIS Member

NRC STAFF PRESENT:

Brian Holian

Donnie Ashley

Louis Lake (via telephone)

Emma Wong

David Pelton

Jay Collins

Jim Medoff

Steven Arndt

David DeSaulniers

G. Edward Miller

Ian Jung

Bill Kemper

Ted Quay

NRC STAFF PRESENT (CONTINUED):

William Kennedy

Tom Koshy

Stu Richards

George Russell

ALSO PRESENT:

Mark Ajluni

Lee Mansfield

Tom Tynan

Wade Richards

Mike Rowe

Paul Brand

Dave Brown

Robert Williams

Dan Flynn

William Horin

Philip Holzman

I N D E X


| AGENDA ITEMS | PAGE |
|---|---|
| Call to Order | 5 |
| Review of License Renewal of Vogtle (VEGP) | |
| Opening Remarks | 7 |
| VEGP Introduction | 11 |

SNC License Renewal Application 12
Staff Introduction 28
NRC Staff Review Summary 29
NRC Onsite Inspection Results 31
Committee Discussion 36
Digital Instrumentation and Control (I&C)
Interim Staff Guidances (ISGs) 46
Afternoon Session 133
Adjourn 275

P R O C E E D I N G S

(8:29 a.m.)

CHAIRMAN BONACA: Good morning. The meeting will now come to order.

This is the first day of the 561st meeting of the Advisory Committee on Reactor Safeguards. During today's meeting, the Committee will pursue the following: license renewal application and final Safety Evaluation Report for the Vogtle Nuclear Plant, digital instrumentation and control Interim Staff Guidances, license renewal application and Final Safety Evaluation Report for the National Institute of Standards and Technology reactor, draft final Regulatory Guide 1.211, Qualification of Safety-Related Cables and Field Splices for Nuclear Power Plants, preparation of ACRS reports.

This meeting is being conducted in accordance with the provisions of the Federal Advisory Committee Act. Mr. Sam Duraiswamy is the Designated Federal Official for the initial portion of the meeting.

Mr. Louis Lake of Region II is on the phone bridge line to listen to the discussion regarding the Vogtle license renewal application.

We will have some members representing the Nuclear Utility Group on Equipment Qualification which is NUGEQ on the phone bridge line to listen to the discussion regarding draft Final Regulatory Guideline 1.211.

To preclude interruption of the meeting, the phone will be placed in a listening mode for the presentation and committee discussion.

We have received no written comments from -- no, we have received written comments from NUGEQ regarding new Regulatory Guide 1.211. We have not received any requests for time to make oral statements from members of the public regarding today's sessions.

A transcript of portions of the meeting is being kept. And it is requested that speakers use one of the microphones, identify themselves, and speak with sufficient clarity and volume so that

they can be readily heard.

We'll move on to the first item on the agenda, which is the Vogtle License Renewal Application. But before that, I would like to -- Dr. Abdel-Khalik would like to make a statement.

VICE CHAIR ABDEL-KHALIK: Thank you, Mr. Chairman.

I have a conflict. Therefore, I will not participate in the discussions regarding to the Vogtle license renewal application.

CHAIR BONACA: Okay.

With that, I'll go to Mr. Sieber who will take us through the presentation.

MEMBER SIEBER: Okay. Thank you, Mr. Chairman.

Our first session this morning is the license renewal for two units at the Vogtle Nuclear Plant. The Vogtle plant consists of two units, four-loop Westinghouse-type PWRs with dry ambient containments. And it is located about 26 miles southeast of Augusta, Georgia, which was my hometown

for a while. And Michael lived in Aiken so we're familiar with the territory.

We had our subcommittee meeting on November 5th, which was clear there were some issues that came out of that. And I'll just briefly touch on what those issues were.

The first was the number of exception to GALL, of which there were 14, which is -- we have spoken to the issues of exceptions to GALL in previous reports on license renewals. I would just point out at this time that when there are a lot of exceptions, it indicates that GALL could possibly be updated to lower the number of exceptions taken.

Some applicants have taken an effort an to change their AMPs, Aging Management Programs, to better match GALL. And so that's another approach to that. But since we have discussed it in so many previous letters, I've concluded we need not discuss it again.

The second issue that came up during the subcommittee was medium-voltage cables that appeared

to be submerged at least part of the time. This is an issue that is generic to many plants in the United States that use medium-voltage cables that are underground or underground duct work.

And we consider this a current licensing issue and not a license renewal issue. So there is a generic letter out on that which the licensee must respond and come up with a program to solve that problem.

The third issue to come up during the subcommittee was the fatigue analysis. There is no open item here. The licensee has committed but has not yet done, to my knowledge, the fatigue analysis the way that is so suggested by the ASME Code.

And lastly there were some material condition issues, for example the boric acid program, there was some evidence of corrosion/deterioration based on photographs and the reports from the region.

In addition, there were photographs of anti-corrosive material that apparently came from

the containment air coolers when those coolers were repiped to use to cool containment during outages to provide a better working condition for the workers in containment during outages.

That does not appear to be a condition that would effect the safety of the plant. On the other hand, boric acid condition, to the extent they exist, is a current licensing issue. And needs to be remediated and not wait until license renewal occurs.

So those are the four issues. I would bring them out here just to put on the record the fact that we looked at these items and made some preliminary determinations about them. And you may not see them in our final letter or perhaps you will, depending on what the issue is.

So with that, I would like to introduce Brian Holian, Director of License Renewal, to introduce the staff speakers and the licensee for this session.

Thank you.

MR. HOLIAN: Thank you, Dr. Sieber.

I'm Brian Holian, Director of License Renewal. In accordance with the agenda, I will just introduce NRC staff and turn it over to Southern Nuclear for their presentation. The NRC presentation will follow the licensee's presentation.

One item before introductions, as Dr. Sieber mentioned, on the GALL update, I remind the Committee that the GALL has served, you know, very usefully in license renewal reviews. And we are in the process this year of updating the GALL.

The Nuclear Energy Institute, on behalf of a lot of licensees, has already sent us some comments that we get from the public and we'll be working through a GALL update to minimize exemptions and, you know, increase the efficiency of reviews really.

For introductions, to my right is Mr. Dave Pelton, the Branch Chief that also has the Vogtle review.

To his right and presenting later will be Donnie Ashley, the Senior Project Manager in License Renewal.

Already on the phone, the Chairman introduced Mr. Lou Lake, the reactor inspector from Region II. And he presented at the subcommittee back in November. And he's on the phone.

Also on the phone is his Branch Chief from the Division of Reactor Safety, Mr. George Hopper.

With that, I'll turn it over to Mark Ajluni, the Licensing Manager for Southern Nuclear Company.

MR. AJLUNI: Thank you.

Thank you, Mr. Chairman, and distinguished members of the ACRS staff.

I'd like to start off today by introducing myself. I'm Mark Ajluni. I'm the Licensing Manager for the Southern Nuclear Fleet. And I'd like to introduce the members of our team.

Mr. Todd Youngblood in back. Todd is

our Engineering Director at the site.

Mr. Jack Stringfellow, Jack is Licensing Supervisor for Vogtle.

Mr. Cary Martin, Project Engineer, electrical, for the license renewal project.

Jon Hornbuckle, Project Engineer, time-limited aging analysis -- I'll get that straight.

And I'd like to introduce Mr. Lou Bohn. And Lou is Project Engineer, electrical -- no, I'm sorry, mechanical.

And also with us today is Tom Tynan, Site Vice President.

And Lee Mansfield, Site Engineering Support Manager.

Next slide. Okay, I'd like to start off really talking about the site. And then I'll cover some key points, open items, and subcommittee follow-up items.

The Vogtle site is a Westinghouse, four-loop plant. Bechtel is the architect engineer. It went commercial in the late '80s. The megawatt

rating is 3625 and producing about 450 megawatts electric. It has been uprated and the latest uprate was a feedwater flow measurement uncertainty uprate.

Ultimate heat sink for the plant is the NSCW system forced draft cooling towers and basins, right there. And these are concrete structures, Category One seismic. And then for the power producing segment of the plant, there is a turbine cycle cool provided by natural draft cooling towers, the hyperbolic towers here.

And our latest core damage frequency is 1.5 E to the minus 5 for those of you that are interested.

Some of the key project points, when we applied for license renewal, we applied for Unit One and Unit Two even though Unit Two had not completed its 20-year requirement. And the NRC did review that and grant us an exemption pursuant to 10 CFR 54.17(c). Currently, both units are within the 20-year cycle.

Other key points, I'll talk about the

aging management reviews in a minute. We credited 38 aging management programs. Twenty-four of the 38 were existing programs and 15 of those required enhancements, nine there were no changes to the programs.

Twenty-seven of the 38 programs are GALL. Only minor exception were taken to GALL. And since we talked about it, some example of the exceptions would be different versions of a code or a standard, perhaps a different surveillance interval, and material environmental issues. And then other differences. Overall though we were greater than 85 percent match to the GALL program.

And one thing we are very proud of is the fact that there are no open or confirmatory items for the final SCR for license renewal. So that was -- we were pleased with that.

And now I'd like to turn it over to Lee Mansfield and Lee will talk about some of the subcommittee follow-up issues.

MR. MANSFIELD: Good morning.

The reason Region II did a site inspection and a walk-down of our Boric Acid Corrosion Control Program in the spring of 2008. They concluded that the program would adequately manage boric acid but pointed out that we had a non-boric acid residue in our containment. It is a white residue that could potentially mask boric acid leaks.

So we have taken a number of actions there and I'll describe those. Next slide please. I did want to show you an example of what this residue looks like. This is an area looking up under one of our containment coolers that has nuclear service cooling water passing through it.

The white residue and the staining is from past leakage out of the cooler that is above this area. And as you can see, it dries white and could potentially mask boric acid.

Next slide please. Our corrective actions have included procedure changes. We went and revised every procedure that has anything to do

with a walk-down or inspection or housekeeping at Plant Vogtle to make sure there is no confusion between this material and a boric acid leak.

We've actually done training which involves recurring training coming into outages as a reminder. We've done enhanced communication through our electronic means. And in general have made sure that while we're recovering our containments from this issue, that there is no confusion.

And we've told our plant staff whenever there is a question about this, you know, default to a condition report in our corrective action program, come ask the boric acid corrosion control engineer, and we'll get to the bottom of it.

We have put in place a very, very aggressive inspection, cleaning, and repainting program. We're making at-power entries as we speak. We've been doing that for a couple of months now. Actually for the last month, we've been doing that weekly.

The bulk -- those efforts are fairly

short in duration again because we're at power. They are really valuable because they are helping us plan for our outage cleaning efforts, which is where the bulk of our work is going to be.

So we have -- we currently have a significant commitment by Tom of people and budgets going forward to make sure that we come to grips with this residue issue and clean it up. We will be doing, as a minimum, these large clean-up efforts in the next two refueling outages on each unit.

We've also developed work controls tools to help us identify -- promptly identify leaks from cooling water systems and containment so that while we're cleaning and recovering, we don't have new leaks that go too long and create more of a problem for us.

Next slide please. This is the same photo I showed you before of the underside of one of our containment coolers. I just show this as an example of how we are able to recover these areas, clean and repaint and recoat and get back to our

original condition.

MR. TYNAN: Before we move further, I just want to make sure the Board understands that I've given this, you know, a lot of my personal attention. I've walked down all these areas in both containments. And make sure, as Lee mentioned, that we have resources and whatever we needed to clean up the containment and address these issues.

And to make sure that the station, my station has the proper focus on this item, we have made it number five on our major issues list which gets attention from the entire plant staff.

So we are going to make sure that, you know, we're not taking this lightly. We've taken this very seriously and intend to have this addressed in short order in the short term as well as making sure we have long-term actions so it doesn't occur again.

MR. MANSFIELD: Next slide please. This is a photograph that was shown at the subcommittee meeting on November 5th. And it was shown as an

example of the white residue. There was some discussion about the material condition of the valve, particularly the carbon steel packing follower and gland studs had minor corrosion on them.

We wanted to follow up with that issue and tell the Committee what we've done. Next slide please. We had originally evaluated this as minor corrosion in our corrective action program and had not planned a near-term remediation of that valve.

We have since gone back out to that valve -- I've gone personally and looked at it. And we've cleaned the valve and confirmed our initial belief that it was minor corrosion and we didn't have to replace any components.

Next slide please, Lou. This is an after photograph of the same value. And this was -- we did this without liquid cleaning methods. So this was the after condition. And I really just wanted to show that this was, indeed, what we thought it was.

MEMBER RAY: How do you deal with ALARA considerations when you elect to do something like that? I mean is it worth it?

MR. MANSFIELD: At-power cooling?

MEMBER RAY: No, just the manner and exposure --

MR. MANSFIELD: Okay.

MEMBER RAY: -- that's involved in the housekeeping.

MR. MANSFIELD: Well, we took that into account in doing this. And actually these are all of the work that we're doing inside containment now is outside the bioshield and in low-dose areas. The dose rates are very low and we're picking up very little dose doing this.

We looked at all of the impacts of doing that and see a real benefit in the head start in helping us prepare for the outages to refine our cleaning methods and make sure that when we get into the outages we can do the most, you know, the most cleaning and the best effort we can do.

MEMBER RAY: Well, I guess I conclude from that that if significant exposure would have been incurred, you wouldn't have done it.

MR. MANSFIELD: I certainly would say that there would be a point where it wouldn't make sense to go in and do this kind of work at power because of the dose.

MEMBER RAY: I'm not talking about at power necessarily.

MR. AJLUNI: I would say we always consider radiological consequences and dose when we do work. And that's a factor. For these valves in this area, you know, the Vogtle containment is a very large containment. Things are spread out. There's lots of shielding. And for this work, it is low dose.

MEMBER RAY: Well, low but some dose, I would guess. It may be negligible, I don't know what the field is in there. It just -- it didn't sound to me like you were taking that into consideration when you were talking about

progressing.

MR. TYNAN: We are top quartile in the industry for four-loop Westinghouse PWR in terms of overall dose. And looking at both non-outage and outage dose. And this particular project, you know, always gets a lot of attention when we go into containment. And we assess dose relative to our goals. And so --

MEMBER RAY: I just wouldn't want you to take away some message here that wasn't intended when it comes to incurring dose for housekeeping purposes.

MR. MANSFIELD: And we didn't. To be honest with you, we didn't. We see -- you know taking the dose into account, we really do see a great value in -- for our planning, to be able to get in there in these low-dose areas, do what cleaning we can, scope out what we're going to do during outages to make that the most effective.

MEMBER SIEBER: I think that goes two ways. And generally I leave it to the licensee's

judgment as to whether housekeeping is worth the dose that it takes. But we do have examples in the industry where housekeeping -- poor housekeeping has masked major problems, for example, in Ohio.

And so I think that the management of Vogtle and every other plant has to decide the extent to which they will expend dose to find out what the condition of their plant is. And I think in the examples that the applicant has shown here that it is reasonable.

And I agree with you --

MEMBER RAY: Well, Jack, I would just like to hear it mentioned.

MEMBER SIEBER: Right. It's on the record. But it is a judgment call.

MR. MANSFIELD: Next slide please. The second follow-up item is water in pullboxes. Now at Vogtle, the end scope medium voltage cables are all located in tunnels and not subjected to submergence with one exception. We have two non (1)(e), 4kV cable cables that run from the turbine building out

to our high-voltage switch yard to support switching operations for offsite sources.

During a region inspection, water was found in one of the pullboxes, the pullbox nearest the high-voltage switch yard. And our corrective action for that has been to go ahead and accelerate the implementation of the license renewal aging management program inspections.

So we were doing quarterly inspections of those boxes, those three boxes. We've now moved those inspections to monthly based on our findings. We'll continue to trend the results.

When we inspect and find water, we pump it out. We'll continue to trend those results. In the mean time, we are developing a design change. We have on our work list for 2010 to add automatic sump pumps to two of the three boxes that don't have sump pumps in them now.

And I will tell you that, you know, we're -- if we need to change the frequency again, if there are other actions we need to take in an

interim method before we get the sump pumps in, we'll do that.

MEMBER STETKAR: Remind me, I look at too many plants. Are the main safety-related pumps at Vogtle 4kV? Or are the 480 volt?

MR. MANSFIELD: The main safety-related pumps are 4kV.

MEMBER SIEBER: This issue is also a generic issue. In November of -- excuse me, March 21st, 2002, there was an information notice issued by the staff on this matter of submerged safety-related electrical cables. There is a Generic Letter issued in 2007, which Vogtle and other licensees are required to respond to that talks about inaccessible or underground power cable failures that disable accident mitigation systems or cause plant transients.

These are current licensing issues that would be handled under the reactor oversight process. I presume you have received the Generic Letter and have responded to it.

MR. MANSFIELD: Yes, we have.

MEMBER SIEBER: And so that would be the manner of disposition of this item with regard to license renewal is through your Generic Letter response.

MR. MANSFIELD: Okay. Next slide please. Mark Ajluni will cover the aging management of Boral.

MR. AJLUNI: Thank you.

Since the last ACRS meeting related to this issue, we got basically notified by the staff that they had expressed a concern concerning Unit One Boral spent fuel pool racks. And on Unit One, Boral is the material that is used for the spent fuel pool racks.

Unit Two uses a different material called Boroflex. And Unit Two does not credit the Boroflex in their licensing basis.

And the concern was that the Boral perhaps could experience similar degradation effects as Boroflex related with aging.

And we had proposed -- we currently monitor the spent fuel pool chemistry and one of the elements we look for is aluminum. And the presence of aluminum would indicate that there was some degradation going on potentially with the Boroflex. And we also monitor industry operating which, to date, has not shown any problems with the use of Boral as the material.

We had a lot of discussion with the staff about where do we go with this and there's really not any evidence of the degradation. The driving factor for us was, as pointed out the staff, was that the Unit One racks are, they're not original Vogtle racks. They were purchased from Maine Yankee. And so they actually are rather older racks. In fact, they are one of the older set of racks currently in use.

So if there was an aging impact or effect due to Boral degradation, one might expect them to show up on the Vogtle racks first. And given that and thinking about what the right thing

to do was, we made a commitment to go forth and conduct testing on the racks.

We'll do a baseline inspection in 2017. And then within ten years after that, we'll do -- but prior to the license renewal period starting, we'll do another neutron attenuation test or some other test and measuring absorber effectiveness and we'll look to see if there has been any degradation of that.

If we see degradation, we'll report it as OE and we will take appropriate measures to deal with it. And to address that, we made a commitment to do that. It is a one-time commitment.

MEMBER SIEBER: Let me ask you a question --

MR. AJLUNI: Yes.

MEMBER SIEBER: -- about your racks. Do you use flux trap design-type racks? That's the ones where you have the space between them.

MR. AJLUNI: Yes, the high density.

MEMBER SIEBER: And the idea is to put

the Boral where the flux peaks so you get the greatest capture?

MR. AJLUNI: That's correct.

MEMBER SIEBER: Okay. Those racks came out shortly after the Executive Order that banned recycling and a lot of plants backfit with those kind of racks. One of the issues, besides the loss of boron as an absorber material, is the change in geometry that occurs when the Boral blisters.

And so when you inspect and you do a determination as to whether the Boral is still there, you have to look at whether the geometry has changed because of blistering or other effects that would change the neutronic characteristics of the rack itself.

Are you aware that that could be a factor?

MR. AJLUNI: We are aware of the blistering.

MEMBER SIEBER: Okay.

MR. AJLUNI: And the issue. There's

industry OE out on it. And our testing would factor that into it.

MEMBER SIEBER: Okay. Thank you.

MR. AJLUNI: Okay. And that's all I have on that issue if there are no further questions.

In summary, we created an experienced, high-quality team and a high-quality application. The team -- the members of the team worked on all three Southern nuclear plants license renewals. This is the last one so they have had a lot of experience.

They've made extensive use of GALL. There were thorough audits and inspections of the program. We've been very responsive to the NRC throughout the review. We're proud of the fact that there's no open or confirmatory actions.

And finally, we're confident that Vogtle Electric Generating Plant is prepared to manage aging and continue to operate the plant safety beyond its 40-year regular life.

Thank you very much.

MEMBER SIEBER: Okay. Thank you.

Any questions of the applicant at this time?

MEMBER RYAN: Just one. You mentioned the residue several times. And it is interesting to see the change. Did you ever figure out what the residue is?

MR. MANSFIELD: Yes. The residue is principally from our nuclear service cooling water system. That system is made up to by well water. And the minerals in the well water, when they come out into the air and dry, they turn white.

There is a corrosion inhibitor in that system as well called tolytriazole. That dries white so between the two, when that system has had leakage over the years, it has caused this staining.

MEMBER RYAN: Okay. Thank you.

MEMBER SIEBER: Any other questions?

(No response.)

MEMBER SIEBER: If not, I would ask the

staff.

Thank you very much.

MR. HOLIAN: This is Brian Holian. I'm Director of License Renewal. We'll transition to the staff's presentation.

Presenting is Donnie Ashley, the Senior Project Manager. Also joining us at the side table is Dr. Sam Lee, Deputy Director of License Renewal.

And a reminder, primarily for questions, but the region is on the phone. That's Lou Lake, Reactor Inspector. Go ahead, Donnie.

MR. ASHLEY: Thanks, Brian.

Good morning to you all. As Brian said, I'm Donnie Ashley. I'm Project Manager for the Vogtle Electric Generating Plant License Renewal Project. I, along with the tech staff members here in the room, are here to provide you with the status of our review of the Vogtle application and to answer questions that you might have.

And Mr. Lou Lake, as has been been mentioned several times, is on the phone with us.

I'll begin with a brief overview of the license renewal effort on this particular project. And the audits and inspections, we're going to cover those in a little different path this time. Usually we do those after we do Section 2 but we'll do those first and then we'll talk about the individual sections of the Safety Evaluation Report.

The Safety Evaluation Report itself, the staff was aided with the audit reviews. In additional requests for information provided by the applicant, in response to 87 of those RAIs, there were 173 audit questions which appeared and ended up in the Q&A database, which is on the docket.

The information collected from the audit and the RAI responses, in addition to the information given to us from the inspection, was used to develop the final Safety Evaluation Report. There are 40 commitments in the Appendix A of the Safety Evaluation Report.

The applicant did not use two number so what we did is we went back to the SER Appendix and

changed that commitment list to show that Commitment No. 10 and Commitment No. 22 were not used at Vogtle. As has been mentioned, the SER contains no open items or confirmatory items. And we have three license conditions that normally -- they are in the back, the last page of your handout -- these are the standardized conditions that appear in all license renewal SERs.

And continuing the recap of the November 2008 subcommittee meeting, the three major issues that were discussed by the applicant are repeated here. Subsequent to the subcommittee meeting, the staff asked seven additional RAIs based on the discussions with the staff and on your questions from the subcommittee.

And this resulted in a revised commitment to provide for the inspection of the panels in addition to the Water Chemistry Program. That raised the total number of RAIs to 94.

The applicant also provided an update on the commitments that were in effect at the time the

subcommittee met. And we added one new commitment, which was involved in -- the emergency diesel generator fuel oil day tank vent line was added to the commitment list.

During the review, the NRC teams conducted three onsite audits and one inspection during the periods listed on this slide. The staff started the review with the scoping and screening methodology audits in September of 2007 at the corporate offices of the Southern Company.

This was followed with a series of onsite audits and inspections from October 2007 through June 2008. Region II conducted that inspection in May and June to review the scoping and screening and aging management programs.

CHAIR BONACA: On page three, you mention that additional components are broke into scope. Could you comment on that?

MR. ASHLEY: Yes, sir, I have a slide on that later.

CHAIR BONACA: All right.

MR. ASHLEY: The specific audit information was combined into the audit summary and used as input into the SER. And it was issued in September 2008.

The original inspection was completed during 2008 and the results were published in a July 18, 2008 Inspection Report that was provided to the subcommittee and Mr. Lake was the author of that Inspection Report.

As has been discussed by the applicant, the inspectors identified enhancements involved in the manhole flooding and the conditions inside the containment. Region II will follow up on these issues during a future 71003 inspections.

The inspection team concluded that the scoping and screening of the non-safety-related systems, structures, and components was implemented as required by the rule and the aging management portions of the license renewal activities were conducted as described in the application.

Mr. Lake, do you have any comments from

Region II?

MR. LAKE: No, we do not.

MR. ASHLEY: Any questions from the Board for Mr. Lake?

(No response.)

MR. ASHLEY: Section 2 discusses the scoping and screening methodology of those structures and components subject to aging management review. The methodology, plant level scoping reviews of the relevant systems and structures, mechanical systems, structures and electrical I&C systems are in those sections, too.

The staff found the results by the applicant also meet the review criteria in the standard review plan and in accordance with the rules.

Three components -- and this should answer your question, Dr. Bonaca -- three components were added to the scope of the review. And that was the non-ESF exhaust fan housing and unit heaters were added as a missile barrier function.

The makeup air duct for the electrical ventilation system was added as A2 on the scope. The chiller compressor components, including the housings, filters, and dryers, were added to the scope as a result of the RAIs that were asked.

Does that answer your question?

CHAIR BONACA: Yes.

MR. ASHLEY: Consistent with 10 CFR 54.4(a), the staff concludes that there were no omissions of mechanical components and structures within the scope of license renewal. The staff believes that the available guidance in identifying such components by the applicant is adequate.

The review of the aging management programs was performed, as I said, by a combination of license renewal audit teams, onsite teams, and headquarter's personnel, as documented in the SER. The summary of those reviews are listed on this slide.

Our counting is a little different than the applicant counts. But we did review 38 aging

management programs. Fourteen of those were new programs and 24 were existing programs. Twenty of the programs had exceptions and/or enhancements made to them. Eleven of the programs were plant-specific and seven were 100 percent consistent with GALL.

When considering the individual elements of the programs and looking at the individual line items that were evaluated, we agree with the applicant that approximately 85 percent of their programs were consistent with GALL.

In Section 3, the staff concluded that the aging management effects will be managed so that the intended functions will be maintained and that the activities authorized by the renewed license would continue in accordance with the current licensing basis to comply with the NRC's regulations.

Section 4, the time-limited aging analysis, our plant-specific safety analyses that involved time-limited assumptions defined by the current operating term, the staff reviewed

information in the application to determine whether the applicant has provided sufficient information pursuant to the regulations for the time-limited aging analysis and for the plant-specific TLAAs.

The applicant evaluates its calculations and analysis against the six criteria specified in the regulation. And that involves the SSEs within the scope of license renewal to consider its aging effects and are determined to be relevant by the applicant in making its safety determination.

The current licensing basis includes the updated UFSAR, engineering calculations, technical reports, engineering work requests, licensing correspondence, and applicable vendor reports. The applicant stated that it did not identify any exemptions granted under 50.12 based on the TLAAs as defined in CFR 54.3.

The plant-specific TLAAs are listed on this slide that were reviewed both in audits and in the office.

The staff has concluded that in

accordance with Part 54, the applicant has provided an adequate list of TLAAs, that the TLAAs will remain valid for the period of extended operations, and that the TLAAs have been projected to the end of the period of extended operation, and that the aging effects will be managed by those TLAAs.

Future commitments have been identified and a schedule is documented in the SER such that there is reasonable assurance that the activities approved by the license renewal will continue to be conducted in accordance with the current licensing basis and the changes associated with the license renewal.

In conclusion, the staff found that the requirements of 10 CFR 54.29(a) have been met for the license renewal of the Vogtle Electric Generating Plant. And that's all I have, sir.

MEMBER STETKAR: Donnie, regarding the Boral questions, I think we've heard that the staff is planning to issue Interim Staff Guidance regarding Boral inspections. Is that correct?

MR. ASHLEY: I believe Matt Yoder -- is Matt here? Matt or Emma Wong has some recent information on that.

MS. WONG: This is Emma Wong of the staff. Yes, that's true. We're working on that right now.

MEMBER STETKAR: I just -- so some of the issues I think the applicant mentioned that they have committed to do inspections by -- I wrote down the date -- 2017 or something like that. But with respect to this Interim Staff Guidance, those -- there may be requirements to perform inspections as part of the current licensing basis. Is that correct?

MS. WONG: Well, we're working on an Interim Staff Guidance for license renewal right now.

MEMBER STETKAR: Okay.

MS. WONG: So that would cover --

MEMBER STETKAR: So that's strictly within the context of license renewal.

MS. WONG: Right.

MEMBER STETKAR: Okay. Thank you. That's -- I was just trying to sort this out whether the Boral issue is going to become similar to the non-EQ cables in manholes where it has been brought up in the license renewal but has essentially gravitated into a current licensing basis.

MEMBER SIEBER: Well, let's ask that question. Does the staff plan to do anything on Boral with regard to current licensees outside of license renewal?

MR. PELTON: Yes, this is Dave Pelton from DOR. As, you know, Emma just introduced herself. And she and her branch are looking at this both, you know, generically for license renewal but also for the current licensing bases.

So the answer is yes. What form that takes ultimately, whether it is an ISG or some other generic NRC communication, that hasn't been resolved yet. So it is still under review.

Nonetheless, it doesn't resolve -- or

doesn't absolve the licensee from the responsibility of making their criticality calculations, you know, are current and suitable. But nonetheless, we are looking at it for both.

And as we do with all of these issues, water in the manholes, et cetera, we work closely with our tech staff to make sure that we understand aging management but also what's the impact on Part 50 in the current licensing bases.

MEMBER SIEBER: I think that's important. I would not like to see any issue of this type rest solely in the license renewal arena.

MR. PELTON: Absolutely agree.

MR. ASHLEY: Part of the commitment that the applicant made was to monitor industry operating experience and obviously to comply with any new requirements that would come out of the agency.

MEMBER ARMIJO: Now I'm a little confused here. The applicant's slide 16 says there is, to date, no industry operating experience showing evidence of loss of neutron absorption of

Boral. And if that's correct, why is the staff so concerned about this issue. You know something is inconsistent here.

MR. PELTON: Emma, can you address that? I'll give you the -- you know, my perspective is -- this is Dave Pelton again. As the Branch Chief and talking closely with Emma and the folks in her branch is that, you know, it's -- you know, there's known physical changes in Boral over time. And it is recognized in EPRI guidelines and a lot of operating experience.

And the concern is, we talked about it yesterday that as a blister forms, you know, right now there hasn't been a Boral issue related where the material, the substrate, the boron powder, you know, fall away and changes its configuration, thus maybe changing the criticality assumptions.

That doesn't mean it won't happen. So, you know, my impression is that these actions are precautionary to make sure that the licensee doesn't inadvertently -- you know doesn't find themselves

down the road in a situation where the criticality assumptions have changed because the configuration with the Boral plates themselves have changed based on these physical changes.

So we think it is prudent if nothing else at this point to make sure they are monitoring it.

MEMBER ARMIJO: So far, have there been any measurements of neutron absorption in plants that have exhibited this blistering? And have you found that there have been lots of them?

MR. PELTON: Emma, I'm going to turn that over to you.

MS. WONG: There has been blistering seen. But they all have been water filled. Our concern is if it is going to be gas filled, and then that changes the criticality analysis if they haven't accounted for it in their original criticality analysis.

MR. LAKE: But, you know, this is not a Vogtle issue. I'm just saying why is Vogtle being -

- this is not a Vogtle problem. This is a broader issue.

MR. PELTON: It is. And, you know, historically, you know I'm not going to pretend to be an absolute expert or all knowing, which -- well, sometimes I am but nonetheless -- you know in the past with Boroflex, you know, we did see changes both in physical properties and in its neutron-absorbing capability.

And there has been a relatively recent issue at Palisades with a material I've heard -- I believe it is Carborundum -- where, again, they had physical changes and then when the licensee did some neutron-absorbing tests, they found that some assumptions had changed in that regard as well.

So, you know, we're trying to stay one step ahead of --

MEMBER ARMIJO: I just want to get it straight. Have there been any measured losses in neutron-absorbing capability on Boral in in the industry?

MS. WONG: No.

MR. PELTON: I don't believe that there has been. Emma, is that true?

MS. WONG: I don't believe there is.

MEMBER ARMIJO: Okay. There have been measurements but nobody has found the loss but you've seen the blistering. You are anticipating there could be loss.

MR. PELTON: Correct.

MEMBER ARMIJO: Okay. I understand it. Thank you.

MEMBER BANERJEE: I have a question. What is the status with regard to inspections and so on related to CRDM cracking? Any potential for this?

MR. ASHLEY: From regional inspections?

MEMBER BANERJEE: Or by the licensee. Are there any issues related to it in the long term?

MR. ASHLEY: We're not aware of that for --

MR. COLLINS: This is Jay Collins from

the Piping and NDE Branch. We currently have issued a rule in September of 2008 which updated our requirements for a CRDM inspection. And the Vogtle licensee will continue to follow those requirements going forward. We don't anticipate anything that would be in the current licensing.

MEMBER BANERJEE: It's not one of the plants which are closer to the limits is it? Pressure, temperature, chemistry?

MR. COLLINS: The requirements --

MEMBER BANERJEE: I'm not talking about inspection but where is it in the sort of hierarchy of plants which are susceptible to this sort of --

MR. COLLINS: I can get back to you with the specifics but --

MEMBER BANERJEE: Okay.

MR. AJLUNI: Mark Ajluni, Southern Nuclear Licensing.

Vogtle is a low-TF plant and ranks low in susceptibility.

MEMBER BANERJEE: Thank you for

answering.

CHAIR BONACA: On page 17, you list three ways in which you may deal with TLAA. And the question I have is could you highlight which of the TLAAs as such that the aging effects would be managed for the period of extended operation?

MR. ASHLEY: All the plant-specific TLAAs would fall into that category to be managed. Unless I misunderstood your question.

CHAIR BONACA: Well, I'm trying to understand, you know, of the -- you are saying the TLAA will remain valid for the period of extended operation or they will be project or they will be managed typically means that that TLAA doesn't reach the 60 years.

MR. ASHLEY: They would continue to monitor the TLAAs --

CHAIR BONACA: That's right. I would have liked to see a list of those.

MR. ASHLEY: -- over the path -- over the entire period of extended operations to make

sure that they remained valid.

CHAIR BONACA: I understand that. I'm trying to understand which ones.

MR. ASHLEY: Oh, which ones specifically?

CHAIR BONACA: Yes.

MR. ASHLEY: Well, the plant specific ones obviously. But any additional that would require updates, I don't know a specific list of those.

CHAIR BONACA: Okay.

MEMBER SIEBER: Okay. I think the vessel TLAAs require ten-year updates, something like that. That would be an example.

MR. ASHLEY: Yes, they would be on the list.

Jim Medoff?

MR. MEDOFF: This is Jim Medoff with the staff. Typically the ones that you see aging management on, you may see them used on the III criterion for a fatigue TLAA. You may see it on, I

think it is EQ, but Doug can verify that with me. And you may see it occasionally on some plant-specific TLAAs that are in Chapter 47 of the application.

CHAIR BONACA: Yes, I mean the reason why I asked that question is that there is a special interest in those where aging effect have not been projected to the end of the license period. And, therefore, they have to be managed.

MR. ASHLEY: That is correct.

CHAIR BONACA: So that's why I asked that question.

MR. ASHLEY: Thank you.

MEMBER SIEBER: Is there any other questions from members?

(No response.)

MEMBER SIEBER: If there are no other questions, I think this concludes this portion.

CHAIR BONACA: Okay. Thank you for the presentation.

And we are well ahead of time. But we

cannot start the next session until 10:15. So we will recess until 10:15.

(Whereupon, the foregoing matter went off the record at 9:23 a.m. and went back on the record at 10:14 a.m.)

CHAIR BONACA: This section is on digital instrumentation and control interim staff guidance. Before I turn over the meeting to Mr. Brown, I would like to just announce that myself, Sam Armijo, and Abdel-Khalik will meet with the EDO at noontime, so we will be leaving, and I would like Bill Shack to chair the meeting for the brief time in which we will not be here, until we start the meeting at 1:00, if we are not back by that time.

With that, I'll turn over the meeting to Mr. Charlie Brown.

MEMBER BROWN: Thank you, Mr. Chairman. Just for a piece of information, this meeting is strictly to cover, and I say that -- try to make sure we focus on these two particular subjects, is Interim Staff Guidance 5. It's a new Section 3,

which are human factors of the overall ISG, but it's really as a result of some questions from us, or requests from the Committee on crediting manual operator actions for diversity and defense-in-depth as a substitute, as opposed to automated systems. I think I phrased that roughly correctly.

And the second one is to try -- ISG-6 is what's referred to as the licensing process for digital I&C. And the purpose of that is to try to put a little meat to go out to the folks submitting these, telling them what types of information they have to submit in order to allow the Staff to do a satisfactory job of evaluating those designs. And, right now, it's just kind of amorphous.

So, with that, I will turn it over to David Desaulniers, Steve Arndt, and Ed Miller. I guess Steve is the leader of the pack.

MR. ARNDT: I'm the first speaker, anyway.

Good morning.

(Chorus of good mornings.)

MR. ARNDT: Mr. Brown mentioned what we're going to do today, is give you a highlight of the ISG-5 update, and the status of ISG-6 licensing process update. We reviewed this with the Digital I&C Subcommittee on February 26th and 27th.

I will start off with giving you just a real basic background, hopefully skip through the slides fairly quickly, give you a reminder of the ISG process, and how we go to this point; particularly, for those of you who didn't read the article in this month's ANS Nuclear News that goes into this in detail. Then, Dave will give you an overview of what's actually in ISG-5 Rev. 1.

MEMBER APOSTOLAKIS: Which month is this, Steve?

MR. ARNDT: March. Then Ed will give you an overview of ISG-6. We are requesting a letter on this this week.

As a result of the November 2006 Commission meeting on Digital Instrumentation and Control, the Commission requested that the Staff put

together a project plan for improving the efficiency and effectiveness of digital I&C reviews, and, also, establish a Steering Committee to oversee those activities, and to coordinate interactions with the industry. We've had extensive interactions with the industry, as well as the public. We're up to almost 150 public meetings over the last two and a half years on developing and improving the digital I&C guidance.

One of the first things we did was establish a set of high-priority, short-term actions that we wanted to look at to improve the efficiency and effectiveness of the process. There is concerns by the industry, and by the Commission, that our process was good, it was adequate, we could get where we needed to be, but we didn't have everything well-established. It wasn't very efficient. We didn't know how to go through it in an effective way. So, what we did, was we established a set of particular issues to improve. Those were assigned to seven task working groups listed there. We

determined that the process by which we would update the guidance would be to develop interim staff guidance through public interactions and discussions.

Once those were established, we'd go back and update the regular guidance. We had a Reg Guide SRP Chapter, NUREG, whatever the appropriate guidance would be. During that discussion, the ACRS asked to be briefed on a regular basis on ISGs as they were being developed. Done that, in most cases prior to issuance, in some cases just after issuance, depending upon the schedule. And we're tried to incorporate as many of the inputs and guidance the Committee has provided to us in those guidance. The Committee will get another opportunity when they become part of the update to the regular regulatory guidance.

A few basic examples. I'll walk through this fairly quickly, so we can get to the meat. ISG-1, which was in cyber security. The ACRS reviewed it as part of their review, and issued a

letter in April. This was, basically, to look at the issue associated with the guidance for developing safety systems under Reg Guide 1.152, and the equivalent industry guidance, NEI 04-04. We reviewed those. We provided an ISG for additional information on how to meet those requirements in either 1.152, or the NEI guidance.

Diversity and defense-in-depth, which is a particularly challenging area for I&C, we provided a significant amount of additional technical guidance on what we meant, how we meant it, and what would be an acceptable guidance. This is acceptable guidance. Jack Herb likes to call it the fast lane, the HOV lane. If the industry chooses to do this particular methodology, we will have a more expedited review. In that, it includes discussions of how much diversity is sufficient, what kind of diversity, these kinds of issues.

One of the issues that was brought up during that review was, if you're going to credit manual operator action as part of your diversity

strategy, what would be the criteria associated with that crediting? ISG-2, which, again, is the fast lane, indicated that the criteria would be 30 minutes. If you have 30 minutes of time to evaluate and assess, that would be considered an acceptable mechanism. If it was less than that, the default position would be additional diverse actuation would be necessary.

Obviously, there are alternatives that have been proposed, and some that have been tentatively approved. The Committee, however, felt, as did the Staff, that a more formalized review process would be appropriate, so ISG-5 now is being updated to include that, and we'll get to that shortly.

Risk, of course, was a major issue. We've looked at this extensively. One of the challenges, of course, is that digital systems are incorporated in all the new plants, and Part 52 requires a comprehensive PRA to be evaluated, so the first part of that issue was to provide some

guidance on what would be an acceptable Part 52 PRA. That was issued after ACRS review in August of 2008. Other issues were brought up associated with what can we do for relaxing requirements based on risk information? Staff determined that that was not yet a ripe subject. That has been deferred to the Research Program.

ISG-4 looks at communications, electronic communications in the control room, issues associated with multi-divisional video display units, inter-channel communications, et cetera.

As I mentioned, ISG-5 looks at a number of issues. The first revision, which was issued in September of 2007, included -- help me, Dave.

MR. DESAULNIERS: First, included computer-based procedures.

MR. ARNDT: Thank you.

MR. DESAULNIERS: And minimum inventory.

MR. ARNDT: And minimum inventory. This new update goes on to include manual operator

action. One of the issues that was raised, the safety parameter display system, wording in the actual rule was going to require rule making, and that's been put on that track, instead of the ISG track.

Licensing process you'll hear more about, but this was the whole issue of what level of detail needs to be reviewed, how is it reviewed, when is it reviewed, how do you stage the reviews, how do you provide a level of assurance that the reviews are going well for the industry, so that they can better plan their resources?

ISG-7 is the fuel cycle facility. Originally, we were not going to have this, but as we looked more at the fuel cycle facilities, these are enrichment plants, the fuel facilities, and things like that that are being built right now, it looks like a lot of distributed computer-based control, a lot of very similar kinds of issues. So, we are in the process of taking care of the electronic and digital issues associated with that.

Slightly different issues associated with consequence, slightly different issues associated with how distributive the systems are, but we'll have a very similar one. That's currently under development, and we'll talk to the Subcommittee probably in August about that.

In addition, there's a lot of other I&C work going on. We talked to the Committee in February a little bit about the Oconee review. Wolf Creek is - I'm looking at Bill Kemper - we've just issued the Wolf Creek safety evaluation report, which is using a newer technology, field-programmable gate arrays for some of their safety systems.

We're also going back and looking at some of the operational issues associated with what are the challenges associated with digital I&C, when you actually get in the plant. How do you do 50.59 determinations? If you have an event, how do you do significant determination process? Are there going to be any challenges?

We believe that most of these will be fairly straightforward analysis. You just have to work them through the process. Since we don't have particularly good risk models, it will be a little bit more difficult. Maybe expert panel, like we do for the maintenance rule for systems, we don't have the model for things like that. We're in the process of working through those right now.

So, as the Steering Committee moves forward, we're going to complete the ISGs. Hopefully, we'll get the good alignment with our industry colleagues. We've been using very collaborative interactions with our industry colleagues. We've been using the ISGs in the reviews of Oconee, and Wolf Creek, and a number of other review items. Also, in the advanced reactor area for the review of topical reports in those areas. We've gotten pretty good feedback on it. We will update the regulatory guidance as we get more experience, and get the time to do those. We'll integrate those into our international

collaboration. We're getting a lot of input from our international colleagues, and, also, requests for how did we come up with this? How are we implementing it, things like that. We're proactively working in a number of bilateral areas. We're working extensively in the MDEP program. Ian Jung is one of the chairs of the INC part of the MDEP program. The International Database program on digital system failures important to safety, COMPSIS, we're collaborating, so we're continuing to work on this issue.

One of the biggest challenges, of course, is digital systems evolve so quickly compared to their analog inputs, we need to stay ahead of the curve, if we can, or, at least, keep up with it.

MEMBER APOSTOLAKIS: Steve, in your interactions with international organizations, have you noticed any differences in the emphasis they place, for example, here, we think now we are all on the same wavelength, and we're thinking potential

failure modes, and the risk part can wait until we know more. Although, these guys usually are not too hot about risks, is there a difference, you think, in perspectives?

MR. ARNDT: There is some difference. And I'll take a first crack at it, and let Ian weigh in if I don't capture everything.

Depending upon the regulatory structure, for example, the Brits have a much more heavily structured risk component in their licensing process. So, they're a little more enthusiastic about the risk efforts. The French, as you know, are very adverse to incorporating this, and we're kind of in-between. But, depending upon the licensing process, the structure of their issues, there are some differences. But we are seeing a lot of similarity, as well.

Diversity, for example. Most of the companies are coming in fairly close to where we are on diversity, in some cases, actually even more conservative than we are. But we're starting to see

a convergence in that area. Ian, would you like to amplify on that at all?

MR. JUNG: Yes, Ian Jung with NRO. One of the insights that we are gaining through new reactor reviews, for example, EPR, we've been interacting with the French and Germans extensively last couple of years. I think what we are finding is the design stages for those countries are not -- none of the reviews are completed. What we're finding as we go, we are finding that some of the new design details that brings out some of the new concerns. But, in all cases, the way each country is approaching, is based on sort of mostly a deterministic approach, that they are making significant assumptions of common cause failure, for example, and how to deal with that. And their approach has been somewhat different, and they have a hard-wire backup, for example. But, in the French case, they haven't even decided exactly what is acceptable diversity and defense-in-depth at this point. So, as we work together, I think we are

gaining a lot of insights.

MEMBER APOSTOLAKIS: So, is the approach that, if there is a common cause failure, and we don't even know why, are we protected? Which is really what I think one of our old NUREGs is doing. Are they following the same kind of philosophy? You have to speak up.

MR. JUNG: Oh, yes. I think we're making the same assumption, that we don't know exactly what failure modes we are talking about yet. We have to deal with it.

MEMBER APOSTOLAKIS: Do you think any of those groups are ahead of us, in the sense of they've done more work?

MR. ARNDT: I think from the area of operational experience, certainly, some countries have more years of dealing with the systems than we do, so they may have a little bit more insight in that aspect. But, by and large, we're probably as far along, if not ahead, of most countries in terms of actually figuring out what we want, why we want

it, and what the technical basis is associated with that.

MEMBER APOSTOLAKIS: Final question.

MEMBER BROWN: Don't worry. I'll interrupt you in a minute. This is not a common mode failure of this meeting.

(Laughter.)

MEMBER APOSTOLAKIS: You will address the issue of operator action, and timing, and all that. Are they addressing that, at all?

MR. ARNDT: I have not seen a lot of -- most of the international interactions I've had, have basically been, we generally agree with your 30-minute criteria, and we're either implementing it, or modifying it, but they're taking lead from us. Ian, you may have a different perspective.

MR. KEMPER: Yes. This is Bill Kemper. I'll just try to answer -- add some information to your question here, George. In that meeting that we had a couple of years ago with seven different regulators, we asked them specifically what was the

time response for operator actions, and almost of them had some criteria. It varied from 15 minutes, to 30 minutes, but they almost all were sensitive to that, and they brought that into their regulatory criteria.

MEMBER APOSTOLAKIS: Thank you.

MR. ARNDT: Okay.

MEMBER RAY: Let me make one comment here in the context of your talking about other organizations. Something you might not have noticed, perhaps you did. The March 19th FERC agenda had an interesting comment about that FERC would regulate all critical equipment within nuclear power plants that's not regulated by the NRC. So, it would be interesting to know how the heck we figure out what's regulated by the NRC. But that's not for this meeting. I just want to make sure you knew.

MR. ARNDT: We are intimately aware of that issue, both the electrical and the I&C branches both in NRR, NRO, and NSIR are working those issues

right now.

MEMBER RAY: Okay.

MR. ARNDT: With that, I am going to turn it over to my colleague, Dave. And he's going to go through, at some level of detail, ISG-5, Revision 1.

MR. DESAULNIERS: Good morning, all. My name is David Desaulniers. I'm Senior Technical Advisor for Human Factors in the Office of New Reactors. I'm also a member of TWG-5, as the human factors lead for that group.

Today, I'll be providing an overview of the most recent interim staff guidance developed by TWG-5. And, as Steve has already told you, that guidance concerns the crediting of manual operator actions in diversity and defense-in-depth analyses.

We amended ISG-5 in November of '08, to include that manual operator action guidance, and that's why the slide title here Rev. 1. As noted, also, previously, the subject is also an ISG-5, computer-based procedures and minimum inventory.

That guidance was completed in September of '07, and the Committee has been provided a presentation regarding those topics, previously.

By way of background to discuss the manual operator action guidance in ISG-5, I'm going to briefly speak to ISG-2, and we have Ian Jung here, so if I misrepresent ISG-2, please correct me here if I go astray. But, ISG-2 was really the genesis for this particular guidance in ISG-5. ISG-2 was addressing concern that a software problem, digital protection, reactor protection system could affect multiple channels, and result in a common cause failure of –

MEMBER APOSTOLAKIS: So, is the issue of operator action part of ISG-2 or 5, or both? Are they looking at different things?

MR. DESAULNIERS: No. They're looking at the same thing. What we're doing here is, is we're simply providing additional clarification and guidance that was in ISG-2, and we're expanding upon that to provide greater detail on how to credit

manual operator actions they hadn't discussed in ISG-2.

MEMBER APOSTOLAKIS: But 2 and 5 will be consistent.

MR. DESAULNIERS: Yes.

MEMBER APOSTOLAKIS: Okay.

MEMBER BROWN: They hope. ISG-2 says greater than 30 minutes.

MEMBER APOSTOLAKIS: Right.

MEMBER BROWN: The default is greater than 30 minutes.

MEMBER APOSTOLAKIS: Right.

MEMBER BROWN: If you have less than that, you build hardware, or something. This says –

MR. DESAULNIERS: The Staff –

MEMBER BROWN: You all asked, and I went back and read the minutes and the letter, and you all asked them to evaluate a process that would allow consideration of operator response in less than 30 seconds.

MR. DESAULNIERS: Thirty minutes.

MEMBER BROWN: Thirty. That would be –

(Simultaneous speech.)

MEMBER BROWN: I don't know. Okay. If we had a PRA, maybe we would. I'm just teasing. Okay. But, yes. Less than 30 minutes, yes. So that's --the thrust here was to lay out a process and methodology to address that, to address the less than 30 minutes issue, fundamentally. Although, to apply to whether it's greater than 30 minutes, is really valid, also.

MEMBER APOSTOLAKIS: I understand that, but my question is, why does it appear in two places, 2 and 5?

MEMBER CORRADINI: Yes. Why didn't you review 2, I guess is George's question.

MEMBER APOSTOLAKIS: What is my question?

(Laughter.)

MEMBER CORRADINI: Why didn't you just review 2, and put this in.

(Simultaneous speech.)

MR. DESAULNIERS: ISG-2 is currently in the process of being revised so that it appropriately points to ISG-5, where the human factors guidance is provided. So, we are working to insure the guidance appropriately point to each other, and we just put the details of the guidance in ISG-5 as human factors guidance.

MEMBER CORRADINI: Just so I understand, just for clarity. So, what you're saying is, if you accept 30, plus or minus 30, you'd stick with 2. If you want to get into the realm of less than 30, go see 5.

MEMBER APOSTOLAKIS: No, I don't think that's what I said.

MEMBER CORRADINI: That's what I heard you say. I apologize.

MR. DESAULNIERS: What we're doing is, basically, providing guidance that will -- ISG-2, basically said if you're going to credit manual operator action, you need to do a human factors

evaluation in order to credit that action. We're providing the guidance for how to do that human factors evaluation.

MEMBER APOSTOLAKIS: Okay.

MR. DESAULNIERS: Now, there was an assumption under ISG-2 that you were, basically, crediting action over 30 minutes. This guidance that we are providing, as Charlie mentioned, will provide methodology to credit action, whether it's over 30 minutes, or under 30 minutes.

MEMBER CORRADINI: Thank you.

MEMBER APOSTOLAKIS: But, I thought your answer would be that this issue of human factors appears naturally both in 2 and 5. In 2, it may be part of defense-in-depth. In 5, we are dealing with an integrated control room, and we want to know, again, how -- what the timing is, and all that. Is that the correct perception, that it's an issue that naturally appears in both? That's why it's in both.

MR. DESAULNIERS: I believe that would be a fair characterization.

(Off the record comments.)

MR. DESAULNIERS: Under the D3 analysis, going back to vulnerability for common cause failure, such vulnerabilities are identified. As previously stated, there's the option of using an inverse automated backup system to address such vulnerabilities. Alternatively, ISG-2 provides, as we've been discussing, the option to use manual operator action.

Specifically, with regard to manual operator action, ISG-2 stated what's on your screen here, and they may be credited for responding to events in which the protective actions subject to the common cause failure is not required for at least 30 minutes, and the plant response is bounded by the Branch Technical Position 7-19, recommended acceptance criteria.

This is the guidance that the Committee had heard. There was recommendation that we consider a process that looks at 30 minutes, above and below 30 minutes, and this is where we developed

guidance in ISG-5.

Not only did we hear that message from the Committee, but also industry. They were recommending that we consider guidance for less than 30 minutes. ACRS provided us a letter in October of '07 recommending development of such a process. So, the TWG-5 action plan was expanded to incorporate an action item to address this issue. We proceeded with public interactions with our industry counterparts to develop that guidance. Industry developed a White Paper for a methodology which we took into consideration as we were developing the ISG, so we gave that consideration, and we incorporated it into -- much of that into the process that I will go on to describe.

The ISG has three major sections to it, scope, Staff position, and methodology. And I'll address each of these in more detail in the subsequent slides. The guidance is review guidance. We're not specifying a specific mitigation strategy here, but, rather, outlining a methodology by which

licensees and applicants can demonstrate that the proposed manual actions are feasible, can be implemented reliably. You will, ultimately, see a key component of this process is a demonstration in real time of the ability to perform those actions.

This slide summarizes material and scope section of the ISG. This is where we, basically, highlight fundamental assumptions and expectations associated with this guidance. The scope covers the credited actions in the D3 analysis, as we've been discussing, talking about instances of abnormal operational occurrences, and postulated accidents concurrent with the software common cause failure, the digital protection system. Again, in the context of ISG-2, the digital protection system here, you're talking about the reactor trip system, and the SFAS system. As a result, you're talking about instances where you're looking at cases of beyond design-basis to consider for those actions, where you're talking about backup actions in this case. The guidance is applicable to both new and

existing reactors, so that summarizes the scope.

The Staff position, again, the general high-level expectations that the actions that are going to be credited would be included in the emergency operating procedures, they would be executed from within the main control room, so we're not, in this case, talking about crediting actions, local actions elsewhere in the plant. These should be demonstrated to be both feasible and reliable. And, ultimately, they can be addressed in the human factors engineering program consistent with Reg Guidance for that program, which is NUREG 0711.

MEMBER APOSTOLAKIS: You have an argument why you have excluded outside the control room?

MR. DESAULNIERS: Yes. Again, we're talking about actions that -- the emphasis in developing this guidance was clearly on can we credit actions in less than 30 minutes? So, there is a limited time –

MEMBER APOSTOLAKIS: This is the –

MR. DESAULNIERS: Yes, the guidance can be applied to instances of greater than 30 minutes, but going into development of guidance for actions outside the control room takes into additional considerations of environmental conditions, and transient requirements that we didn't attempt to encompass in this cut of the guidance.

MEMBER APOSTOLAKIS: But if somebody -- so, it's an application, and they give you a systematic approach to addressing this, you would still look at it. It's not excluded. You would probably question the timing, and the conditions, and so on, but –

MR. DESAULNIERS: This is guidance, and it doesn't prohibit the applicant from proposing approaches that would be outside that guidance.

MEMBER APOSTOLAKIS: Okay.

MEMBER MAYNARD: I guess, I still am not sure that it's a good idea for the Staff's position to exclude it. It may take more work, or it may be more difficult, or whatever. But when you put in

the Staff position that it excludes -- basically, just for actions in the control room, you're kind of into a no-man's land. And I agree that more scrutiny on actions outside the control room, but a lot of plants have unique features, and different things that -- you're probably going to have to address that, anyway. Are you going to address that within guidance, or are you going to do it totally outside of the Staff position?

MEMBER APOSTOLAKIS: The word "exclusion" is kind of strong.

MEMBER MAYNARD: Right. Yes. David?

MR. DESAULNIERS: Ultimately, the interim staff guidance will be developed further to be incorporated into a permanent guidance document. An opportunity will be there to address further issues. But, at this point, the objective was to try to get out something in a timely fashion for industry, so we limited the scope to where the Staff and industry believes it was most likely going to be needed, at this point. So, it was within the

control room.

MEMBER RAY: The bullet there about demonstrated to be feasible and reliable seems -- of course, you want that to be a criterion, but how to accomplish that would be awfully tough. Do you have any thoughts as to what that –

MR. DESAULNIERS: As I go into the process, you will see that that's specifically what the process is all about, demonstrating both the feasibility and reliability.

MEMBER RAY: Okay. I didn't attend the Subcommittee, so just go right ahead.

MR. DESAULNIERS: Okay. So we will go in, and we'll address that more in detail later in this presentation.

The methodology section is comprised of four phases; analysis, preliminary validation, integrated system validation, and then long-term monitoring. These phases roughly correspond to the phases you have seen in the industry White Paper. There are some differences in particular details,

and emphasis amongst these, but the process, overall, is -- we're fairly close. I'll move on to the analysis section, which is the first slide.

The objective of the analysis phase here, and this is the first part of -- again, the first section of the overall process. And the emphasis here is, preliminary assessment of what is the time available to perform the required actions, and that's based on analysis of a plant response. And, then, what is the time required for the operator to actually implement the actions necessary for the mitigation?

The objective here, also, is to identify what are the critical assumptions in critical operator errors that would underline this analysis. And, ultimately, establish an adequate margin between your estimate of time available, and your estimate of what the time required is.

MEMBER APOSTOLAKIS: Now, estimate, what -- are you going to tell us how people estimate things? Yes.

MR. DESAULNIERS: Yes. More specifically, time available is estimated using methods consistent with those described in ISG-2. We're talking about realistic assumptions regarding the plant response, and the criteria in BTP 7-19. To estimate the time required, it's expected that that time required would be based on an analysis of a documented sequence of actions, such as that you may find in the task analysis, the emergency procedure guidelines, or EOPs. And you would use one of several acceptable methods for developing those estimates. And we'll provide on a subsequent slide some of those methods.

The margin calculation, the methodology proposed by the Staff is that that would be -- margin would be established based on the time required to recover from credible errors. So what's the longest time that would be required to recover from a credible error? And you would use that as your margin, difference between your time available, and time required.

This slide lists acceptable methods. This is not an all-inclusive list. They're not limited to these, but the guidance provides examples of acceptable methods. And they range from developing your estimate of time required based on operator interviews and surveys, or looking at operating experience, making use of software models that model human behavior and task sequences, using mockups, control room mockups as a tool, expert panel elicitation, and it includes a ANSI Standard, which is ANSI/ANS 58.8, which was developed to provide a basis for estimating time required to perform safety-related operator actions.

That methodology, we provide as a means for basically doing the task decomposition, which means breaking down those operator actions into the particular elements so that you have a detailed analysis of that action sequence, provides a good framework for doing that. We're not, necessarily, endorsing that guidance through our risk, as a means of coming up with the specific numbers that are in

that guidance document, because there are specific numbers associated with action sequences that we don't believe, perhaps, are appropriate to application here in a digital control room.

MEMBER BROWN: Relative to this, though, if I go through that list and look at it, it's a pretty soft, very qualitative list, which, when I read the ISG and how that was put together, effectively - now, correct me if I'm wrong - but it, effectively, established a methodology for each licensee can develop his own metrics based on his operator interviews, his analysis, his surveys, his own particular experience. And there's no common metric that then gets carried forth from licensee to licensee. So, every time somebody wants to do it, you're going to have to re-evaluate whether that qualitative approach is satisfactory, how thorough was it, what was the detail of the modeling that they did, what standard, from where did they draw the standard when they did the analysis, if it was a standard?

I mean, it just seemed fairly vague when I went through it relative to a nice -- I didn't expect it to be hammered in concrete, but I would have expected some metrics to be laid out to define how you would do this. I mean, you can talk to people and say oh, yes, it only takes me five minutes to do that. Well, every time I figure it's only going to take me five minutes to do something, it takes me an hour. I'm being a little facetious, but I did it for a purpose. The individual's ability to estimate their time to perform something in a non-stressful situation is, I think, fraught with peril, from that standpoint.

MR. DESAULNIERS: I don't disagree with your observations, and I believe that is, in fact, why the subsequent phase, preliminary validation, is intended to be a independent confirmation of the initial analysis. Also, it behooves the applicant to be conservative in their assessments with respect to the time that's required. In other words, not to under-estimate the time required, but to estimate on

the high side, because, ultimately, this action will need to be proven out in a demonstration of integrated system validation. And if, at that point, that time required exceeds what was in their analysis, they're failing one of the criteria of their integrated system validation. So, yes, it's qualitative, and it would have been nice to be able to go to something more like ANSI/ANS 58.8, which provided specific time criteria associated with each of these elements, but we didn't believe we were prepared to do that at this point. And that's something that we have as a plan to develop in the future –

MEMBER BROWN: Having endorsed that standard. I think it said that when we go to the presentation somewhere, if I remember correctly.

MR. DESAULNIERS: Ultimately, we would like to support further development of ANSI/ANS 58.8, so that it could be endorsed as a standard appropriate to the application of digital control.

MEMBER BROWN: So, then are you –

MR. ARNDT: We have not endorsed the standard.

MEMBER BROWN: Yes, okay. I got that. I wasn't going to beat that to death. But here's a circumstance, whether you want to issue this late this year, or later this year, for actual use by the licensees when they're doing analyses. I think you said something about the fall, or whatever, you wanted to issue this.

MR. ARNDT: Well, we've already issued the interim guidance. We'd like to issue the long-term permanent regulatory guidance later this year, early next year.

MEMBER BROWN: Oh, so this -- I didn't understand. Is that actually already out, this Section 3?

MR. ARNDT: Yes, sir.

MEMBER BROWN: Okay.

MR. ARNDT: It can be revised.

MEMBER BROWN: I didn't know that. That's all. You answered a question, I was going to

ask that, and I forgot to, so I appreciate the answer.

MR. ARNDT: I'd also like to point out, there are industry standards, at least in the nuclear business, on how to conduct operator interviews, and operator surveys, and task network modeling, and things like that, so it's -- there are standardized methodologies out there, so it's not quite as loosey-goosey as it might seem.

MEMBER BROWN: Go ahead.

MR. DESAULNIERS: Okay. The -- I won't go into the detailed review criteria, but the general topics that are provided associated with the analysis phase for NRC review are listed here, ranging from time required, and time available, to the staff size, composition, and augmentation of that staff, and identification of credible operator errors.

As, for an example, one of the criteria would be that time required estimate to allow sufficient -- should be sufficient to allow for

implementation of the symptom or function-based EOPs to address the particular event. So, it would not -- it would allow for that type of response.

MEMBER APOSTOLAKIS: I have a question. I'm sorry.

MR. DESAULNIERS: Oh, I was going to say, a second example with regard, for example, staff size, is the criterion would be that they would be able to implement the actions, assuming the minimum crew size required by the technical specifications.

MEMBER APOSTOLAKIS: Something that has been bothering me for a long time, there appears to be a disconnect between this kind of approach, which you're proposing, which also has been proposed in the context of human actions under fire conditions, and the human reliability models that another group has developed. You are placing time available, and time requirement at the center of your evaluation. That's not the only thing, but your decision is primarily based on these estimates, and the margin

that there will be between the two times. That's not exclusive, but you are also considering other things.

Every time I propose to the Staff that was working on this time, really has to be central to their thinking, time just as another performance-shaping factor, varied in stress and other things. And I'm bothered by that inconsistency. The question is, who's right? I think you –

(Laughter.)

MEMBER APOSTOLAKIS: But I don't understand that. I don't understand. And then we have the experiments, I don't know if you're familiar with them, of Haldon. But they're really looking at time sequences. They have crews, and did they do it in time, and so on. So, it's not really a question to you, especially after I said that you're right.

MR. DESAULNIERS: I'll agree.

(Laughter.)

MEMBER APOSTOLAKIS: But something that

has been bothering me, and the conflict is primarily from my colleagues, so next time we talk about human reliability models, I will raise the issue again. I really don't think that time should be just another common shaping factor. I mean, it's –

MEMBER MAYNARD: I think another key element in this probably is training. And, also, recognition of when there is a time limit, not really the right term, but when timing is important, if an operator knows that, and that's part of the training and everything, they will generally meet that. If they're not aware that something needs to be done within 30 minutes, or 20 minutes, or whatever, they may, or may not make that time frame, just depending on what else is going on. So, I think that it needs to be clear if there is a time that something needs to be accomplished. And then, also, training, because -- and ongoing training. We run into this in fire protection and some others of shutdown outside the control room, of where when programs were initially put together, people trained

them that they were able to do it within the time frame, several years later go back and ask them to do it, and they couldn't do it within that time frame. So, I think that needs to be factored in, and I think it's implied that it needs to specifically be –

MR. DESAULNIERS: It specifically addresses part of the long-term monitoring phase, which is the last part of that. It addresses that point, exactly.

MEMBER APOSTOLAKIS: Actually, this raises the issue really of the other performance-shaping factors. Training is one, but, I mean, the issue of stress, and so on. Are you considering those at all in your evaluation?

MR. DESAULNIERS: Well, some of these other performing-shaping factors is what would be ferreted out in the end in terms of the integrated system validation when operators are expected to perform these activities in real time. That time factor would be a stressor, of sorts, as well as

some of the other factors.

MEMBER APOSTOLAKIS: So, they are part of this evaluation, of your evaluation, or the methodology.

MR. DESAULNIERS: Right. It's addressed, ultimately, in part of the integrated system validation.

MEMBER APOSTOLAKIS: Okay.

MR. DESAULNIERS: It's also, I believe, addressed as part of when we say that the margin should be based on credible operator errors, the expectation is, is that the analyst will be considering what some of those stressors are. And, as a result, what the potential for those errors are.

MEMBER STETKAR: Dave, I think all of these discussions are really good, like talking about operator responses, and uncertainty, and variability, and all that kind of stuff. The ISG, and everything you've spoken about so far, inherently presumes that we know the time required

absolutely, precisely. And it doesn't seem to provide much guidance, or warning about the fact that there could be just as much uncertainty in our ability to estimate that time required, as our ability to estimate the operator response times. In particular, the time available may be a function of the specific scenarios that you're asking people, the fidelity of the thermal hydraulic models to be able to -- and I don't see any of those kind of warnings in here for the time available part of the big equation. The fact the methodology does have some surrogate ways to account for crew variability, because of the mean value estimates that you use, and some -- your margin to account, essentially, for uncertainties in the time required. How do you answer questions when people say well, there could be just as much uncertainty in the time available, and I don't see those same kind of warnings in the ISG.

MR. ARNDT: Right now, the ISG assumes that you take those times as a direct pass-off from

your BTP-19 analysis, so the conceptual concept was that that would be a given in this analysis, and those issues would be dealt with in ISG-2, and/or BTP-19.

MEMBER STETKAR: Okay.

MR. ARNDT: We understand that those are issues. We had this discussion associated with it, and there is a criteria associated with how you do the analysis, and what assumptions are made in your thermal hydraulic models in the BTP-19 analysis. It's certainly an area that needs, probably, some additional looking at in that part of it, but for this analysis, it's a boundary condition.

MEMBER STETKAR: Along that line –

MR. ARNDT: I know that's not a perfect answer, but –

MEMBER STETKAR: One of the sources of uncertainty might be similar, but not identical scenarios, so I don't recall how you pick the scenarios that this is based on, and if there's any -- if you consider the range of scenarios, you can

suffer some of this uncertainty through that kind of an approach.

MR. ARNDT: Without going into gory detail, which we really don't have time for at this meeting, but the BTP-19 time required numbers are based on doing a best estimate thermal hydraulic analysis of the Chapter 15 analysis, and the AAOs. Strictly, that's the set.

MEMBER STETKAR: That's the set.

MR. ARNDT: That's the set. It's a deterministic analysis, assumed to be bounding based on that.

MEMBER STETKAR: Okay.

MR. DESAULNIERS: I think, with that, unless there's additional questions, I'll move on to the discuss of the preliminary validation phase.

Now, this phase, Phase Two, in essence, is intended to be an independent confirmation of the analysis results. And, it's really only applicable to those vendors and applicants under the Part 52 process, because it's a means of addressing

providing reasonable assurance where you have instances where the applicant would not have the benefit of trained crews, and full-scope simulator available to do a full validation, as would be available at an existing reactor.

The expectation here is that the methods used would be diverse, and as realistic as the maturity of the design allows consistent with my prior comments here. These analyses for the preliminary validation, this is the part where it would be submitted to the NRC as part of the D3 diversity and defense-in-depth submittal.

(Off the record comments.)

MR. DESAULNIERS: The methods, here, again, these are examples of acceptable methods. Applicants are not limited to these. They range from basic tabletop analysis, in which the applicant would be using people with expertise in the response of the plant and operation of the plant in order to be able to go over drawings and background material, basically just as the methodology implies. Tabletop

of a talk-through of what actions would be required, and how the plant would respond. A little bit more developed concept is actually walking through this activity, where you may have mockups associated with it, but you can begin to go into greater detail of the actual actions that would be required to be taken. There are software models, again, that can be used to perform these types of analyses. Man-in-the-loop testing, and even going to the extent that you have part task simulators that you could use to simulate some of the activities associated with this.

The intent here is that you would be going through these activities with a team of individuals that was independent of those that performed your initial analysis to identify any potential pitfalls, or missing pieces in the assumptions, and to come up with an independent assessment of the time required, and time available to perform the actions, and the margin, and confirm that the initial analysis was on target. That would

be used as the basis, again, for the D3 submittal.

MEMBER BROWN: Again, on something like tabletop walk-throughs, where these people sit down, they develop that methodology on their own. The level of detail, how they do it, the documents they have available, their vision of what the scenario looks like. Are there any established practices which define these things, which tell people how to develop those practices, and utilize them, or is it just going to be up to each licensee to figure out how to do the tabletop, whatever? And, then come -- I mean, part of your ability to accept a final decision that they make, to come into acceptance, having some fidelity to the methodology that they use based on some type of an accepted standard by industry, or what have you. And this, like the previous ones, just seems to be come in and tell us how you did it, and we'll evaluate it ad hoc with -- I agree, you can't tell them how to do it, unless you want to give them a standard that's an industry standard, based on previous comments. But there are

-- it sounds to me like, based on your comments, there are no real standards for these within which they would operate.

MR. DESAULNIERS: Well, there's various guideline documents and best practices, but there's nothing that's specifically cited in the ISG that says -- points to specific practices.

MEMBER BROWN: Well, prototype testing or simulator to you, and it's the level of detail that you're simulating, the level of detail of the prototype man-in-the-loop testing that you do, how far down do you track that relative to information he gets, the processes he has to go through, it just seems a little bit –

MR. ARNDT: As Dave has said, there are guidelines out there, 0700, 0711, are two NRC guidelines. There are other ones out there. But, as you'll see later on in the presentation, it behooves the licensee to do this in sufficient detail that they have a very high confidence that when they get to final validation, that they will

pass. So, why don't we revisit this at the end of the presentation, and see if you're a little more comfortable with it?

MEMBER MAYNARD: Well, the process, I take it that it initially would be up to the applicant to pick the method, and defend the method. And the NRC would be reviewing it at some point to determine whether those are appropriate methods for the type of actions that are being required. Because a walk-through may be very appropriate for one thing, but -- our tabletop may be appropriate for one thing, but inappropriate for another. They would propose that you would review the –

(Off mic comment.)

MEMBER BROWN: Isn't that a little late? By the time it gets in here, to finally say no, you didn't do it the way we like it. What I've heard in previous meetings, you'll have a hard time doing that if you haven't defined a standard or what have you within which they have to operate. If it's ad hoc –

MR. DESAULNIERS: Well, we provided the review criteria, again, associated with these activities, so while it doesn't prescribe methodologies, there are criteria with respect to the preliminary validation that they would need to make, need to meet, in addition to the analysis. And as Steve commented, in the end, here they're expected to use multiple methods within these so that they -- again, while there may not be specific standards that they're pointing to, use of multiple methods should insure that they're coming to some convergence on what the appropriate time is. And, in the end, because the times have been developed as part of the analysis and preliminary validation, that time required will be one of the standards they'll be held to in the actual demonstration of the -- in the integrated system validation. There's incentive there to insure that this is a bounding analysis.

MEMBER BROWN: Okay. We've got to move on, so I'll wait.

MEMBER APOSTOLAKIS: So what would you do if some licensee came to you and said as part of my preliminary validation, I used a human reliability model, probability that things will go wrong is ten to the minus four.

MR. DESAULNIERS: The review criteria that we've just put up on the screen here -- no, you were right. Go back. We were just talking about using validation of two or more methods, the particular -- what I was expecting to see is that there's an expectation that they're going to be evaluating time required and time available. To just give me a probability that there wouldn't be an error in performance is not going to address the minimum criteria of addressing those.

MEMBER APOSTOLAKIS: But that's my question, why? I mean, what if they come in as -- you guys at the NRC could develop ATHEANA, and we did a great application of ATHEANA, and the numbers turned out to be very low. I mean, why -- how can you turn down something that somebody used, an NRC-

developed methodology?

MR. DESAULNIERS: It goes back to the broader comment of we're providing, as Steve mentioned in the opening remarks, what is attempting to be a fast track of here's a methodology that if you're within these bounds, it will facilitate Staff review. It doesn't preclude an applicant from coming in with an alternative approach. But, yes, we would require additional review time to address that alternative approach. So that flexibility is available, it just wouldn't be considered part of the fast track, as described here.

MEMBER STETKAR: Let me see if I can sort that out in my head. Somebody came in with an ATWS situation where they, according to this methodology they demonstrated that the time required is just 15 seconds less than the time available. That would probably bother you a little bit. But, on the other hand, if they did some sort of detailed risk assessment, and could convince the Staff, through whatever means, that the frequency of ATWS

challenge -- those challenges was ten to the minus, pick a small number, per year, that might be taken into consideration. Is that reading too much into what you're saying, or is it –

MR. ARNDT: Let's not mix ATWS with common cause software failure diversity analysis. It's a little bit different beast, but similar requirements. But, the point being, if you come in with a analysis that does not meet this particular criteria, but you would like us to evaluate it irregardless of that, that's fine.

MEMBER STETKAR: And that would, I think –

MR. ARNDT: And both the criteria and the methodology would be evaluated. I'll use the Oconee trip example. When Oconee submitted their application for their SFAS and RPS upgrade, they provided certain accidents that did not bust the Part 100 requirement, so they didn't have to worry about the diversity requirement for that part of it. Certain accidents that did, and they chose to put

in a diverse actuation automated system, that met that checkbox. And one accident scenario that did neither, and would require manual operator action. So that last one, we evaluated, and although the methodology would have been appropriate to this, the actual criteria was not. It was much shorter.

We went in, and we looked at that, we look at what they provided, which was operational history, training, and other things, that gave us sufficient assurance that they could meet that in a reliable fashion. Most of it was done that way, one outside.

MEMBER CORRADINI: Just a comment. I can't find the restriction to Part 52 for this anywhere in the document. It's on the slide, but it doesn't say that in the document.

MR. DESAULNIERS: This is -- this portion –

MEMBER CORRADINI: This portion, right.

MR. DESAULNIERS: This portion, preliminary validation. Okay. Well, I can look

through it. I can tell you that that's the intent. I'd have to look through the document to point specifically to where –

MEMBER CORRADINI: It's very specific -- you won't find it mentioned in that context.

MEMBER BROWN: Are you talking about the ISG itself, or Part -- ISG is Section Phase Two. It's on page 16.

MEMBER CORRADINI: But it doesn't say that it's restricted to Part 52.

MR. DESAULNIERS: The preliminary validation part here –

(Simultaneous speech.)

MR. DESAULNIERS: The middle of the document on page 16, "Note: Licensees upgrading existing plants should skip this phase, and go directly to Phase Three, Integrated System Validation. The preliminary validation is only required for those vendors or applicants who are using the 10 CFR Part 52 process."

MEMBER APOSTOLAKIS: Let me see if I

understand your response to Mr. Stetkar's question. Phrase it a little differently. This evaluation is done –

MEMBER STETKAR: Mine came out of ADAMS.

MEMBER APOSTOLAKIS: -- independently of the accident sequence? In other words, we're just looking at the software, and we're postulating common cause failures, and so on, and we want to -- and if they want to take credit for manual action, they have to follow this process. Is this done independently of which accident sequences might be needed, and how unlikely that accident sequence might be? Or are you kind of neutral on that?

MR. ARNDT: Let me explain it again, and see if I -- because I'm not exactly sure of the question you're asking. The process is, you look at the BTP-19 accident scenarios, which are, basically, you make all your Chapter 15 accidents and you AOOs, you assume a concurrent software common mode failure. You then look at how that scenario plays out in thermal hydraulics, and other things.

MEMBER APOSTOLAKIS: So it's not really embedded in the PRA, which goes beyond those accidents.

MR. ARNDT: No. It's a deterministic analysis. Because of the way the Commission policy is, it permits best estimate analysis, but it's not a PRA-based beyond-design-basis type analysis.

MEMBER APOSTOLAKIS: Thank you.

MR. DESAULNIERS: Okay? Let's go on to the next slide here. I think I've already largely covered this slide here, the results for the preliminary validation documented in the D3 analysis for NRC review. Ultimately, they should support high confidence that the time required for manual operator action will satisfy the success criteria for the integrated system validation, which is the next phase of the analysis.

MEMBER APOSTOLAKIS: So this is like beyond a reasonable doubt. It remains undefined, but sort of wait and see, that type, high confidence. I remember in an earlier document

within fire protection, they demanded that there was a numerical guidance as to how much shorter the time required should be, time available. Are you giving anything like that here, or is it just judgment?

MR. DESAULNIERS: No, it's based on the calculation of a margin, which the guidance in this document, base that margin based on the time necessary to recover from a credible operator error. The error with the longest recovery.

MEMBER APOSTOLAKIS: Are you saying that the required language should be based on the available time by at least 10 minutes or something?

MR. DESAULNIERS: The time required to recover from -- so, analyze your action sequence, what errors might occur, identify that okay, there may be a mismanipulation of a switch, that the time to recover from that error, how much time is it? If that is your bounding error, that would be the basis for your margin.

MEMBER BROWN: Effectively, what it says, there's no addressing how short is too short.

I phrased it slightly different when I looked at it, so if somebody came in and said we only need eight minutes, we require five -- no, we require eight, but we can react in five, that would be -- theoretically, for this, that would be okay. If we require five, but we can do it in two, because our analysis -- that could be okay. There is no how short is too short.

MEMBER RAY: But George is asking about the use of the words "high confidence." What do you base high confidence on? The answer seems to be well, if it's capable of recovering from an operator error in the time required, then I have high confidence it will be done. That sounds like an answer to me.

MR. ARNDT: And it can be demonstrated in the validation.

MEMBER BROWN: That's our one -- I can show you that I can do it. Now that I have high confidence that I will do it, leaves me -- I don't know.

MR. DESAULNIERS: Well, they need to demonstrate it in multiple scenarios with multiple crews.

MEMBER BROWN: That's what I'm listening for, is how do I arrive at this high confidence. George is saying one way, is they have some arbitrary, admittedly, margin.

MEMBER APOSTOLAKIS: Right.

VICE CHAIR ABDEL-KHALIK: I understand that this has to be done for the Chapter 15 accident scenarios, and for the anticipated operational occurrences.

MR. DESAULNIERS: Correct.

VICE CHAIR ABDEL-KHALIK: But doesn't this depend on when this common mode failure occur during a specific scenario? I mean, put yourself in the position of the applicant, who's trying to go through this process. There's just an infinite number of scenarios for a specific accident scenario, depending on when you assume this failure to occur.

MR. DESAULNIERS: That's correct.

VICE CHAIR ABDEL-KHALIK: Have you shown this to be at all workable?

MR. ARNDT: What we're trying to do is define a set of scenarios that are, in our opinion, will be provide a reasonable assurance that all of this -- billions of possible scenarios would be reasonably recoverable based on these actions. Because of the way the BTP-19's structure is set up, we're looking at those scenarios that would possibly bust the Part 100 acceptance criteria. Admittedly, there is lots of other ways of doing this, but this is, what we hope, is a reasonable set of scenarios that the operator can use to demonstrate that their actions can be accomplished in a reasonable time period.

VICE CHAIR ABDEL-KHALIK: My concern is that the scope of the evaluations that the applicant would have to go through, even for a single accident scenario, you have to assume that the common cause failure would occur anytime during that accident,

and the operator actions required to recover at that time will depend on when that common cause failure occurs. And, therefore, this process is just incredibly open-ended. Demanding, I would say, the least, in terms of what the operator –

MEMBER APOSTOLAKIS: What you're saying, Said, is the starting point of the time required and the time available may not be the same.

VICE CHAIR ABDEL-KHALIK: Right.

MEMBER APOSTOLAKIS: That's what you're saying.

VICE CHAIR ABDEL-KHALIK: Well, not just, but the progression of the scenario can –

(Simultaneous speech.)

VICE CHAIR ABDEL-KHALIK: -- when this common cause failure occurs. I think you're asking something that would be very difficult, if not impossible, to do.

MR. ARNDT: It will certainly be challenging. However, you've got to remember, this is only one of several different options that the

licensee has in meeting the diversity requirements. Alternatively, they could install an automated diverse actuation, or they could have the actual system originally designed to be sufficiently diverse, not to be subject to the software common cause failure. So, there are a number of different options –

MEMBER RAY: But you said you met with industry, and worked with them on this. What would be their response to Said's comment, which is, basically, that you have to assume the failure could occur at any time. That's not their assumption, is it, or do you assume the failure initiates the –

MR. DESAULNIERS: Well, we can say that this phase of the methodology is largely consistent with what industry had proposed in their's, so I don't believe that they had identified that as an insurmountable problem.

MEMBER RAY: That's my point, exactly. They're assuming, I would think, that the common mode failure occurs initially, or is pre-existing,

or something of that kind, rather than that it occurs on demand. That's my -- what I would bet.

VICE CHAIR ABDEL-KHALIK: But is that logical?

MEMBER RAY: I don't know. I'm just asking them if they talked about this. I don't know the answer to that question.

MR. KEMPER: This is Bill Kemper, again. If I can provide some insights on this. The way we have evaluated this phase as, we assume, and licensees do their analysis in this method, that the reactor trip system, or the engineered safety feature system fails, concurrent with the accident. In other words, once you have a large break LOCA, it is assuming that the reactor trip fails. It does not perform its safety function at that point, and then the accident is evaluated from there, from a thermal hydraulic perspective, if you will. So, we've always considered that to be an enveloping scenario, if you will, because if the system partially actuates, then you still have some safety

function, if you will. Like, say one train of SFAS actuates, another train doesn't, that's not perceived as onerous as both trains not operating. So, that's been historically the way that's been treated.

MEMBER APOSTOLAKIS: So, what you are saying, Bill, is that the assumptions under which this ISG has been developed are bounded.

MR. KEMPER: That's correct.

MEMBER RAY: Said's hypothesis would argue with that, I think.

VICE CHAIR ABDEL-KHALIK: I guess I will have to think about specific scenarios in which this might not be the case.

MR. KEMPER: Well, the scope is limited primarily to the reactor trip system and engineer safety features.

(Off mic comments.)

MR. KEMPER: Okay. Yes, because, for example, during a LOCA scenario, once SFAS has initiated, of course, the safety function is being

enacted now. Obviously, there are other actions that have to be carried out pursuant to the EOPS, but the primarily safety system has performed its safety function.

MR. ARNDT: In terms of experience in what scenarios give us the most problem meeting the acceptance criteria, most of those are initial actuation-type issues. SFAS doesn't work, you don't have low pressure injection, you have fuel problems, you bust your Part 100 requirement. So, at least the ones we've looked at so far would argue that you probably wouldn't have too many problems with five minutes down, ten minutes down, things like that. Without having looked at every possible scenario, I can't give you a statement –

VICE CHAIR ABDEL-KHALIK: Same here.

MR. ARNDT: The things that we've looked at so far, the major issues are those immediate action-type issues.

VICE CHAIR ABDEL-KHALIK: Thank you.

MR. JUNG: This is Ian Jung. Just to

provide more perspective on this, none of the plants that have come in have not had the -- follow this particular approach, that to the extent that we have to worry about this time available, and all this elements. In some designs, like Wolf Creek case, for example, we told them we are making a decision for that from NR perspective. They don't even need to get into even diverse actuation scenarios, so we have to consider some scenarios. Some of the scenarios end up being according to the D3 analysis, it could be a very simple one manual action that punching reactor trip system. It could be as simple as that, so we need to think about that, and whether we need automatic actuation for that, versus a simple manual action that's going to do it in a few minutes. Maybe all this analysis might be over-killing it.

MEMBER RAY: Just take the swamp over water storage tank in the containment sump, for example, that's a pretty critical time critical thing. Let's assume a failure -- I'm taking too

much time here. But I think that that's the kind of thing we're talking about, not if a plant tripped or it didn't trip. And that's the end of the discussion.

MEMBER BROWN: Can we move on?

MR. DESAULNIERS: I think we might be running tight on time.

MEMBER BROWN: Poor management of time here.

MR. DESAULNIERS: Okay. With regard to integrated system validation, this is the point at which the objective is to confirm that operators are able to perform the credited actions in real time using the as-built design. The method is to use a plant reference simulator capable of realistically representing the abnormal operational occurrences in postulated accidents concurrent with the common cause failure. The intent here is to validate time required using both nominal and tech spec minimum crews to make sure that the actions can be implemented in both those configurations. And,

again, this is consistent with the overall human factors engineering process, can be implemented consistent with NUREG 0711.

The review criteria associated with the integrated system validation address these following areas; integration with the human factors engineering program, that should be done. The criteria for the simulator, the personnel used to run those scenarios, the operational conditions represented in those scenarios, as well as the performance times. And for, I guess, purposes of example, and perhaps the most critical area of criteria, I'll speak about the performance time criteria, just in the next slide

These two criteria, again, bring us back to some of the discussions earlier in the presentation that tie us back to looking at what was coming out of the analysis phase, specifically, the first criterion here. Multiple crews will be running for each abnormal operational occurrence, or postulated accident. The mean performance time of

the crew should be less than, or equal to the estimated time required derived from the analysis phase. So, this is where I was saying it behooved the applicant to insure that they provided a time at the analysis phase that was conservative to incorporate the times that they're actually going to see under the -- for the performance of the crew in the simulator, is if they under-estimate at the analysis phase, they will not meet the first criterion. And it brings that -- and, as a result, it brings in the analysis phase -- the analysis into question, because it would show somewhere that your analysis was not incorporating, perhaps, appropriate assumptions with regard to what was required to implement those operator actions. I'm sorry. You had a question?

MEMBER APOSTOLAKIS: I'm trying to digest all this. So, the first one refers only to the time required. Right?

MR. DESAULNIERS: Yes.

MEMBER APOSTOLAKIS: Second one to the

operator.

MEMBER RAY: You justify the mean time by what? Mean time less than required.

MR. DESAULNIERS: That case, we're looking, again, at verifying that the analysis was a valid analysis, and that it provided an estimate that was going to bound what those operators, on average, were going to be able to do. Ultimately –

MEMBER RAY: Bound and on average, those words just don't go together, to me.

MR. DESAULNIERS: Because the next criterion deals with the actual performance of each individual crew relative to time available, including margin. So, that addresses the other piece. So, both of those criteria have to be met.

MEMBER CORRADINI: So, I've been listening. Can I see the first bullet, again, since you started with the first bullet?

MR. DESAULNIERS: Yes.

MEMBER CORRADINI: So, you're saying if there's some sort of analysis of how the crews

behave, is there a mean performance time compared to a pre-done analysis that says we need to do it by X? If we need to do the action in an hour, and the mean crew performance shows by whatever mechanism is less than an hour, then you set aside bullet one.

MR. DESAULNIERS: Yes.

MR. ARNDT: Not quite. You didn't say it quite right.

MEMBER CORRADINI: Well –

MR. ARNDT: It's, if you do an analysis and it says you can do the operation in an hour, and then you later on say we do it, and we only take an hour or less, it's okay. This is the analyzed amount of time it takes to perform the action.

MEMBER CORRADINI: Oh, excuse me.

MEMBER MAYNARD: The term "time required" is a little misleading.

MR. ARNDT: Yes.

MEMBER MAYNARD: You have to read it in a different context.

MR. ARNDT: You have to read it in a –

MEMBER CORRADINI: Oh, so this is the time to perform the action, not the time available before the action must be performed.

MR. ARNDT: Right.

MEMBER CORRADINI: Okay. I'm sorry. Excuse me.

MR. ARNDT: I know. I do the same thing.

MR. DESAULNIERS: Yes. The time required to perform the action based on the analysis.

MEMBER APOSTOLAKIS: So, this is based on some sort of crew performance. Right?

MR. DESAULNIERS: Exactly.

MEMBER APOSTOLAKIS: Why are you allowing the mean in the first bullet, but in the second you want every crew to pass the test?

MEMBER CORRADINI: Because it's a different thing.

MR. DESAULNIERS: It's a different criteria.

MEMBER APOSTOLAKIS: It is different.

MR. DESAULNIERS: It is.

MEMBER APOSTOLAKIS: By why is the mean more appropriate in the first, and not the second?

MR. ARNDT: The mean is appropriate because it's -- you're going to have an analysis. The analysis is going to say, it's going to take an hour, or 30 minutes, or whatever. The first one you're simply saying, our analysis was acceptable, and we're validating our analysis by saying on average, the crews are meeting where we said we were going to. So, that's validating the analysis. The second one is validating –

MEMBER ARMIJO: I don't understand that. The analysis should be independent of the crew performance.

MEMBER STETKAR: No. This is the analysis of the crew performance. You've got -- there's two analyses going on here.

(Simultaneous speech.)

MR. ARNDT: Sorry. Keep going.

MR. DESAULNIERS: It's also important to take a look at this, because when you get to the -- looking at performance time, there you are looking, presumably, at just correct operator performance, and you may not have the benefit of operator error. So, with respect to that margin, you're not -- you don't have a means to validate that your margin is right, necessarily. And by going back and validating that at least your analysis of the time required, your margin is largely based on that. It'll also give you confirmation that you have an appropriate margin.

MEMBER CORRADINI: So, can I try one more time now with the two bullets, just for numbers. So, what you're saying, if the required time to perform the action is 30 minutes, the mean time of the crew performance has got to be 30 minutes or less. If the time available is an hour, then you're going to look at the crew performance in some methodology to determine not just the mean, but also the wings in the mean to make sure that that

falls within the hour.

MR. DESAULNIERS: Right.

MEMBER CORRADINI: Got it.

MR. DESAULNIERS: Yes.

MEMBER CORRADINI: Thank you.

MR. ARNDT: For each crew.

MEMBER CORRADINI: Got it.

MEMBER BROWN: Estimated time required for what? The first bullet.

MR. DESAULNIERS: The time required to perform the mitigation action.

(Simultaneous speech.)

MR. DESAULNIERS: Not time required to mitigate the accident. Time required to perform the mitigation action, but not, necessarily, to mitigate the accident.

MEMBER APOSTOLAKIS: That's time available.

MEMBER BROWN: Okay. Let's go on.

MR. DESAULNIERS: Okay.

MEMBER BROWN: I'll work on that one

later.

MR. DESAULNIERS: The last phase is long-term monitoring, and this addresses, I believe, some of the comments or questions that were raised earlier with regard to training, and insuring that if, I guess, the experience -- someone noted that if you train operators that they need to do it within a specific time available, that they generally will meet that. Part of this is insuring that that message remains clear throughout the life of the plant, or for as long as those actions are credited, and that programs should be to insure that there are no inadvertent changes to the design configuration of a plant, such that it would change the time available to perform the actions. So, in essence, through training, ongoing training process, there would be a continued look at the ability of operators to perform these actions within the credited period of time. And if that were failing to meet those times, to feed back into corrective action process to insure that the training was

modified, or whatever was necessary, to insure that they can continue to perform those actions within the credited time.

I think I largely addressed the points in this slide previously, so long-term, where do we go from here? That describes the process. The Staff's intent is, ultimately, to develop a Branch Technical Position that would incorporate the guidance that we have in this ISG, and to revise the Standard Review Plan in order to reference that Branch Technical Position.

Longer term in the future, we would hope to support future development of 58.8 as a methodology that addresses, again, some of the questions that I heard today, to provide a standardized methodology appropriate to the application in digital control rooms.

MR. ARNDT: We'll go on right now, because we're a little pressed on time, with ISG-6. This is a review –

MEMBER APOSTOLAKIS: Is this the

estimated time?

MEMBER BROWN: The time available.

(Laughter.)

MR. ARNDT: Our margin has been eaten into quite a bit. ISG-6 is in the process of development, and Ed will go through what it is, where it is, and where we are going in the future.

MR. MILLER: Okay. Great. Good afternoon. As Steve said, my name is Ed Miller. I'm a Project Manager in Operating Reactor Licensing in NRR. I've been in this position for about five years. Prior to that, I spent about two years in instrumentation controls, as a member of TWG-6, providing licensing perspective for ISG-6. What I'd like to do real quick, though, is go over –

(Off the record comments.)

MR. MILLER: Okay. Just real quick, who I was. Then I'd like to go into the purpose of ISG-6, initially. The first two purposes on there really get to reduction of regulatory uncertainty. We'd like to do that by creating a refined licensing

process that I'll discuss in more detail a bit later. And, clearly, defining our expectations for documentation. We'd like to do this both by laying out clearly the criteria we expect to evaluate these submittals by, and giving just a list of documents, and documentation that we would expect to be submitted, both with the application later on, and kept available for audit throughout the process.

Lastly, that we also expect this ISG to serve as a knowledge management tool. This will provide a learning tool for new reviewers as they come in, and as is becoming a very real situation right now, losing our senior review staff to retirement. And it will also promote consistency throughout the review process by serving as that guide. We certainly intend to incorporate lessons learned from recent ISG amendment reviews, such as Wolf Creek and Oconee. Next slide, please.

This is a very basic flow chart. It gives an overview of the process. And recognizing that digital instrumentation and controls are a

significant licensee resource commitment, we developed a phased approach to acknowledge that not all the information needed to make the decision is initially available when they submit a license amendment request. And, additionally, we structured the phases of this to parallel the life cycle of the digital I&C upgrade for a site.

Starting off with Phase Zero, which actually begins before they've even submitted a license amendment request. This is when they're engaging the NRC Staff in a discussion of what they plan to do for digital I&C upgrade, if it happens. And, we actually envision this being one of the most important aspects of the licensing process, even though it occurs before the submittal of an amendment request. And this is because we're trying to propose a creative use of our public meetings to discuss what they're intending to do. In these meetings, we're going to over things, such as defense-in-depth and diversity, any other unique or potentially complex topics associated with what

they're planning on submitting.

In addition to that, we're planning on using the meeting summaries that we issue after any public meeting today to document initial Staff assessments of what the licensee has presented to us. Included in those assessment would be identification of what we, as the NRC Staff, really find to be the critical factors in what they presented to us. This will serve a number of uses as we get into later phases by feeding into the acceptance review that we would perform. Again, we've already identified what's important to us in the submittal ahead of time, identifying with the licensee if you change something, do you think it's going to be as big of an impact? Granted, it's not set in stone. If they change something that we didn't identify before, it could come up. But, like I said, it reduces the regulatory uncertainty that changing something that we didn't identify as a critical factor before, is less likely to.

Phase One begins when they submit their

license amendment application. We'll put that through the acceptance review, which, as I said before, will be benefitted by the meeting summaries that have already been conducted, or issued. Moving into the RAI process. This is another point where we're going to try to make some creative use of our existing processes.

Typically, right now we ask questions when we need information, and leave it at that. We get responses, and, basically, silence is no more information needed. We'd like to start providing feedback in the RAI process of areas of review that we no longer have any questions on. This provides more of a positive feedback to the licensee that we have come to an understanding on that point. And, again, this doesn't mean that we're done, it's approved, no more questions can come up. But it does provide a reduction of regulatory uncertainty by identifying those areas that we feel are being addressed adequately at this point.

Phase Two picks up when promised

information that would be on a schedule established with the original submittal of the application comes in. There really is no absolute defining line between Phase One and Phase Two. We would certainly still continue to ask RAI questions on information submitted during Phase One, as we go into Phase Two. But, Phase Two is where we would expect to conduct the regulatory audits. Again, we've developed a new Office within NRR to govern those activities.

At the conclusion of all that, we would render a regulatory decision. In the case of approving the digital I&C upgrade, we transition into Phase Three. And this really breaks with the licensing, or breaks the end of the licensing process, when we issue that SE. Obviously, we're doing no more licensing reviews of it. It transitions into an inspection process. So, at this point, it goes out, they install the system in the plant, perform site acceptance testing, and all these reviews of those will be conducted by the region under their Inspection Procedure 52003,

which, again, was updated recently to address these issues. Go to the next slide, please.

For the format of ISG-6, we modeled it heavily after RS001, which is the review standard for extended power uprates. Basically, we had a good model that had been proven to be successful there, so we figured, if it's not broke, don't fix it.

MEMBER BROWN: Ed, I'm going to interject one point here, that for the table, the flow chart, I just checked the rest of the sheets and didn't really see this point. Once, if I remember from reading through the ISG that you presented, you will effectively step out of this process at the end of the Phase Two process. That means, it goes -- it's now the region. It's now the licensee, applicant, whoever, they install stuff, and everything else happens. NRC, the Staff, nobody looks at this anymore.

MR. ARNDT: Headquarters.

MEMBER BROWN: Headquarters doesn't. I'm

sorry. I apologize. I didn't mean to -- I was not excluding the region folks, staff from doing that. That's just a point that was not articulated in the rest of the slide.

MR. ARNDT: Headquarters steps out after the SE is issued. Right?

MEMBER BROWN: Correct. Yes.

MR. ARNDT: Okay.

MEMBER ARMIJO: Just before -- what do you actually issue? Is this -- do they get an amendment to the existing plant license?

MR. ARNDT: Correct.

MEMBER ARMIJO: That's what they get. Okay.

MR. MILLER: Yes. The headquarters staff is still available as a consult to the region when they do their inspection. And that has come up before.

MEMBER MAYNARD: Typically, what I've seen, they may be out of it from the design review and acceptance, but when it comes to implementation,

to testing and stuff, typically, somebody from headquarters has been aware of the inspection, and communicated, been a part of it, sometimes.

MR. MILLER: Right. So, again, you could see the format here. In the first part of the ISG, we describe that process in significant detail, going over the very smaller points of what we want to make sure it's accomplished. Again, providing an example, meeting summary to be issued that delineates the summary be included, identifying the critical points, things like that.

The other part of this is going to contain the review areas. And what we did was we broke down the overall digital I&C upgrade review into a number of conceptual review areas that allow somebody to get their mind around an individual review area first, and then put all those individual review areas together into a digital I&C review.

MEMBER APOSTOLAKIS: Is there anything unique to I&C here?

MR. ARNDT: In the format slide?

MEMBER APOSTOLAKIS: It seems to me, this is a standard process that one would follow.

MR. ARNDT: We actually borrowed from the extended power uprate. The concept was we wanted to have a more formalized, more structured approach. And what we looked at was other complicated reviews.

MEMBER APOSTOLAKIS: But, I mean, this is not something we're going to review. This is standard. Unless there is something unique to I&C.

MR. MILLER: The review areas, which we get into now. But that's what's the –

MEMBER BROWN: Yes. The ISG identifies, 8, 9, 10, whatever the number is, specific review areas and provides a definition of what they're looking for within those review areas.

MEMBER APOSTOLAKIS: Okay. That is of interest, the overall approach.

MR. MILLER: Okay. Moving on real quick. I'll go through this very quickly. This is just the tiers of review. It's another way to

reduce regulatory uncertainty. We also came up with the concept of defining different tiers for where an application would fall. Tier One is where you need a topical report already pre-approved with no deviations. This review is very confirmatory, making sure that you fit the envelope within which we approved the topical report. Tier Two is where you use a previously approved topical report, no deviations. I'm sorry, with deviations, so in that case, you identify some points that you need to change from the approval had previously. The parts of it that you do within the previous envelope would be confirmatory, the new parts would require more significant review. Finally, Tier Three is where there's a totally new system, and that requires, basically, a thorough review of all the technical areas that we would do if it were coming in under a topical report. Again, that's to reduce regulatory uncertainty. What tier it falls under will be discussed during the Phase Zero meetings, that we have broad feedback, again, in the meeting

summaries. Move on from that one.

So, this is really the part of it that's very, very specific to digital I&C. These are our working list of review areas. And what we're trying to do, as I mentioned before, is break it down into some conceptual areas to help our new reviewers get their minds around what this is, and really define kind of the points of the process that we get into here.

As you can see, we start off with defense-in-depth and diversity, move into the hardware architecture, how is the hardware built, the hardware design process. Is the design process such that it produces robust product? Looks at the communications on that hardware both within the system, with other class warning systems, and with non-safety systems. Then we look at the software that runs on the hardware, look at the design process that was used to develop the software. And then system qualifications, bins it up into okay, here's the whole system. What are my acceptance

criteria for running the system as a whole?

System, hardware, software, and methodology modifications really is only applicable to a Tier Two review. That's where they've got a previously approved topical report with deviations. And the idea here is we're going to delineate what really consider a deviation. We'll talk about how to address those. But, obviously, that wouldn't be a problem for a Tier One and for a Tier Three. We'd be reviewing everything, so there really wouldn't be any deviations.

Technical specifications, as with any license amendment, we certainly review the technical specifications to make sure that the LCOs and remaining SRs define the minimum level of functionality for the system. One of the things we're trying to include here, and we've been working with stakeholders on this one, is trying to figure out some of the things that might be specific to a digital I&C upgrade that we could prepare reviewers to see as technical specification changes. Are we

going to be getting rid of checks, because that would be something that's very important to a reviewer from a historical aspect.

MEMBER BROWN: Can you say that again? I didn't read that anywhere. You want to get rid of channel checks.

MR. MILLER: Just as a possible benefit, yes. The system has a self-checking feature.

MEMBER BROWN: Okay. You didn't read it in context.

MR. MILLER: I'm sorry. So, kind of a question we asked them was, what would you be anticipating you would like as a technical specification change in some of these to help prepare our reviewers to –

MEMBER BROWN: But if you're going to do that, I'm very familiar with it, because I actually did it. But, you have to have -- you just can't do that willy-nilly. You have to have a way how you check the checker.

MR. MILLER: Right.

MEMBER BROWN: So there's some process you have to incorporate in running that. And you also have to have some process that utilizes those self-checking type things, such that they provide you information as to what they did and didn't. If you don't have that, then you don't have the ability to know where you are at any one time. So, I just throw that out as a -- and I'm sorry I didn't understand the context. Why don't you tell me what you're thinking of that.

MR. MILLER: But, I think your point, though -- I mean, there's a big benefit, that if we bring that up as -- if a licensee proposes to delete a channel check, here's some of the things you really need to be on the watch for, too. I mean, we have a chance to introduce some consistency in how we look at those things, and make sure that we catch everything, too.

MEMBER BROWN: Yes. Just bear in mind, the self-checking doesn't necessarily check all aspects from input to output. So, it's a subset of

things you may or may not be able to do. Okay. Go ahead. I'm sorry.

MEMBER ARMIJO: I know at the Subcommittee meeting we talked about the guidance that's being prepared for how to deal with DAC items. An awful lot of the stuff on this list for the new plants is DAC. Can you say anything about how these requirements and how you would normally review them are going to work under DAC?

MR. WERMEIL: Do you want me to answer that? This is Jared Wermeil from the Staff. The guidance that we're writing in ISG-6 is not intended to be used in accordance with the DAC process under a Part 52 application.

MR. ARMIJO: Okay. I thought this did apply to Part 52.

MR. WERMEIL: It does not. This is strictly for operating plant amendments under 50.90.

MR. ARMIJO: I misunderstood.

MR. WERMEIL: Now, the elements in that working list of review areas are typical of any

digital system, and they would fit into a DAC process. I believe that was your point. That is absolutely true. However, this document is going to describe for a licensee how they would structure their amendment to address these review areas. It doesn't help a COL applicant, because the timing of the information that's asked for here is very different when you're providing a COL application that's referencing a standard design, as opposed to amending your operating license. And this is not going to help them in that regard. The types of documentation, the kind of information is the same, but it will be coming at very different times, and it may look very different. And this document won't help in that particular aspect.

I know that NRO is developing a DAC implementation guidance document. And, eventually, I would expect, because both offices have been talking about this, that there will be some similarities. But, at this particular moment, the structure of this document is not going to assist in

the DAC implementation. It's just for operating plant amendments.

MEMBER BROWN: I still want to emphasize one point. If you look at the draft review areas which they're talking about in here, and based on the ESBWR presentations, and the USABWR presentations at this point, these review areas not under this process, but are applicable relative to types of information that people really ought to be getting. It's a matter of how we do it, and how we fit it into this DAC ITAAC process, which would improve that process immensely, in my own personal opinion.

MR. WERMEIL: One point I would also make, with the implementation of DAC, there is even a question of who would be responsible for the review of those aspects, because DAC is a subset of ITAAC. And ITAAC is, basically, an inspection function. So it's hard to say at this point, and that's something that is being worked out.

MEMBER CORRADINI: I guess, just since

you have now gone into this realm, I really do think, though, this isn't directly applicable, so the timing is different. And the only one part of the thing that you had said at the end that I just want to make sure I understood it properly, was when we asked the question about who would be looking at DACs, we were told the regional office, or Region II, as well as headquarters together. Right?

MR. JUNG: Yes. Ian Jung with NRO. Current decision for NRO is the Division of Engineering in headquarters will take the lead on review of the DAC items. And, obviously, we need to coordinate with the program office for ITAAC construction inspection program.

MEMBER CORRADINI: Thank you.

MEMBER BROWN: I think you are just about done, aren't you?

MR. MILLER: Pretty much.

MEMBER BROWN: I wanted to introduce one other point, in that when I went through the list of this stuff, it effectively addresses what I would

call standard -- you get the software design process and stuff in, but it doesn't really -- the software design based systems bring a different perspective to the development of determinacy and independence in terms of how you assess those, and how are they meeting them relative to the rest of the general criteria for a plant. And this list does not really cover those very explicitly, so my thought process is, you need to expand this list by those two items to cover hey, what should we be getting to make sure we have a good assurance of the determinacy and the independence, and how, not telling them how, but how the licensee or the applicant decides they're going to meet those requirements. So, that's my thought process on the thing.

MR. KEMPER: Yes. Bill Kemper, again. If you could just go back a slide, and show us the list. Software design process, software architecture, those two items there are intended to address the entire software life cycle development process.

MEMBER BROWN: I understand, but it still doesn't cover explicitly the -- I mean, you bring software into the picture, and you start communicating between channels, there's nuance in how you get determinacy and independence. It's not straightforward, because of how you do it. So, you need to know how the guy is going to do it. You don't have to tell him how, but you need to know how, but you need to have some way of addressing it so that he presents the information in a manner in which you can understand how he's doing it. That's all. That's trying to -- I don't care how you -- if you want to expand the review area, the software, the other thing to do that, because it is intertwined with the hardware part of it, as well. They are not separable.

MR. KEMPER: Right. And the communications, the tick mark up there under communications, really that's a broad overarching area –

MEMBER BROWN: It's just not clear when

you read the document. One other point. You all significantly modified this from the first round. It went from this table, which was somewhat incomprehensible. Was that driven by a previous Committee meeting, or was that your choice?

MR. ARNDT: That was driven by a number of inputs.

MR. KEMPER: It's still there. The table will not disappear, but it will take on a different form, if you will. So the list of documents –

MEMBER BROWN: That will be back in the back as an Appendix.

MR. KEMPER: Yes, that's correct. The list of documents that licensees need to submit is extremely important to provide regulatory clarity on what's expected, and when they need to submit that.

MEMBER BROWN: Excuse me. Thank you. Are there any other questions? Number one, I wanted to thank everybody for a very interesting session, as I thought it would be. And I -- while we kind of

ran over five minutes here, I thought the discussion on ISG-5 was far more critical to the overall process here today, than the ISG-6. So, Ed, I apologize for shortchanging you a little bit, but I think a lot of good stuff came out, so I did want to thank you all for the time, and a very good presentation, and a good articulation of the thought process. Back to the chairman.

MEMBER SHACK: Okay, gentlemen. We're ready to adjourn for lunch. We will resume at 1:05.

(Whereupon, the proceedings went off the record at 12:06:42 p.m., and went back on the record at 1:04:19 p.m.)

1

2

3

4

A-F-T-E-R-N-O-O-N S-E-S-S-I-O-N

(1:04 p.m.)

MEMBER SHACK: Okay. If we can come into session.

Our next topic is the license renewal and final safety evaluation report for the National Institutes of Standard and Technology Reactor. And it is Jack Sieber again. It is a big day for Jack.

MEMBER SIEBER: Yes. I am earning my money today.

Thank you, Mr. Chairman, and thank all of you for attending. I guess as an introduction, when I look at what we have done, and what the staff and the licensee has done here on the NIST project, it is not really a license renewal but a relicensing of the plant. And I will spend a couple of minutes explaining why I used that term as opposed to what we have been used to in the last 52 or 53 license renewals under Part 54.

NIST, which is the National Institute of Standards and Technology -- when I was young we were

called the National Bureau of Standards -- and the reactor, which is located at, if you are going northbound, Exit 11, southbound Exit 10, on I-270, is known as NSBR. And that stands for National Bureau of Standards, NBSR, Reactor.

This reactor differs from those that we have renewed licenses for over the last 10 years, in that it is a Type 104C reactor, which is a research and test reactor. And because of that it falls under different portions of the rule, the rules which we use for normal power reactor relicensing, and it stems from actually the Atomic Energy Act of 1954, as amended.

And the Congress at that time had the foresight to recognize what research and test reactors do, along with educational reactors, and noted the fact that the power levels in research and test reactors are a couple of orders of magnitude lower than power reactors, and the source term is several orders of magnitude lower.

And the temperature and pressure

conditions -- for example, at full power -- a NIST reactor operates at 7.2 pounds per square inch, which is not a high pressure, and 115 degrees Fahrenheit, which is roughly bath water, if you don't mind tritium. But we wouldn't want you to do it because we don't want you to contaminate the moderator.

And so the rules are different. And if you trace through from the broad statement in the Atomic Energy Act to how this is interpreted in Title X, you find that the description of -- and the repeat of the statement in the Atomic Energy Act related to this is in Part 50.41, which basically grants broad leeway to the operator and owner of research and test reactors to modify the reactor, modify its operation, in a way to suit the experiments that it is conducting, keeping in mind the foremost consideration of public health and safety.

And because of that, certain of the regulations do not apply, and, of course, others do.

For example, a lot of Part 50 does not apply to research and test reactors -- notably, Appendix A, which is the general design criteria. And, therefore, you can't regulate a reactor like this to meet those criteria.

In addition to that, Part 54, which is license renewal, does not apply. On the other hand, there is a whole host of provisions of the Title X that do apply, and, for example, Part 19, which is notices; Part 20, basically health physics requirements; parts of Part 50, security; Part 100, accident doses, and so forth.

These reactors are built to national and local codes and standards, including the ASME boiler and pressure vessel code for unfired pressure vessels and NIST reactor vessels built to that standard, and B31.1 piping standard, and commercial codes for the confinement building and auxiliary building supporting the reactor. And that is in keeping with the low source term and mild environment of that reactor.

Now, we had our subcommittee meeting on February 4th of this year, which I thought was well done by both the applicant and the staff, and by our subcommittee members at the time. And we had a number of questions, which we collected during the meeting and after the meeting. And with the use of transcripts, which should make our Court Reporter happy, that we used -- actually used the transcripts to figure out what the questions really were, compiled those, submitted them to the staff, and between the staff and the applicant provided answers.

And I have provided all of you copies of this by e-mail, two drafts, one which was preliminary and then a final, and paper form here. And during the meeting today what I would like to do is you can read through the questions, and if your name is listed as the questioner you can read the response to that and determine whether you are satisfied with that response or not.

When I read through them, I see one

commitment, and it has to do with the first question on the adequacy of seismic analysis, where we talked about doing a seismic walkdown, and had you done one, and, of course, you aren't required to do one. On the other hand, the applicant took the initiative and performed one, found a block wall that potentially might not meet power reactor seismic qualifications, but if it failed could endanger essentially safety-related equipment.

And the licensee has agreed to either analyze that wall or remediate the wall, either by fixing it or removing it or replacing it or something like that. And I presume that the staff is incorporating that response into their SER.

And on the other hand, it seemed to me, at least from the questions I was involved in, that the answers were very thorough and satisfactory.

I would like to bring up an issue that is late arising, and this is an issue involving the safety analysis, and has to do with loss of flow in the coolant system. And I will just describe it

enough to let you know that that -- this issue is still out there, but not enough so that you will find fault with my description.

If you look at the loss of flow, this is loss of forced flow. There are four coolant pumps of roughly 100 horsepower each, 13-inch impellers. I think the capacity is something like 9,000 gpm or something like that. Three out of four must operate under the technical specifications, and the modes of failure is loss of one pump or rotor seizing of a pump while the other ones continued to run, and loss of all power to all pumps, which by my way of examining the analysis is the most severe case.

And the figure of merit is the critical heat flux ratio. The licensee has decided that, if you look at the actual flow coast down curve compared to the curve used in the analysis, which is supposed to fit the actual data, that there is a difference and the difference is probably not conservative. And it would appear to me, based on napkin calculation, that what it does is affect the

margin and to -- for the critical heat flux ratio roughly 10 to 15 percent.

On the other hand -- and I think that this issue needs to be addressed, and I would like the applicant and the staff to address it here, but it also needs to appear in the updated FSAR for this facility in a corrected form, in the SER, that says that the new analysis continues to meet the regulations. And that will be an open item from this meeting.

My intention is to cover everything that we can cover that relates to the license renewal for this reactor at this meeting. And when the applicant and the staff are ready to fully address this one outstanding issue, we can have another full committee meeting of short duration where we can hear your official analysis and the staff's review of that, and limit that meeting to that discussion and generate whatever letters or reports that we have to generate at that time.

I think that minimizes staff time and

minimizes the applicant's time. And I would also offer that this is the way the system ought to work, where the applicant finds and evaluates its own errors, reports those. Second best is if the staff finds, and the worst is if we find them. And so you are in the best of all situations at this point, and I think that is a very safety-conscious attitude on everybody's part with this regard.

And so with that introduction, what I would like to do is turn it over to Ted Quay, who is Deputy Director of NRR, Division of Policy and Rulemaking. And that is the division, as opposed to our ordinary License Renewal Division, this division is the division that does this type of reactor.

Ted?

MR. QUAY: Thank you. Good afternoon, Dr. Sieber, and members of the Committee.

My name is Ted Quay. I am the Deputy Director of the Division of Policy and Rulemaking in NRR. Our division is responsible for the NIST relicensing application, review of it.

With me, on the far end of this table I have Kathryn Brock, Chief of the Research and Test Reactors Branch A. Ms. Brock's branch has primary responsibility for relicensing reviews. Sitting next to me is Mr. William Kennedy. He is here as a Project Manager for the relicensing review. Mr. Kennedy will lead the staff presentation.

This afternoon we will begin with a presentation by the licensee that will include discussions of the concerns voiced by members of the ACRS Committee during last February's meeting. Following the February meeting, the staff issued a request for additional information to collect and document information related to the ACRS members' concerns. Mr. Kennedy reviewed the licensee's information and visited the facility to examine the licensee's seismic walkdown.

After the licensee's presentation, Mr. Kennedy will outline the licensing history of the facility, explain the staff's review criteria, and give an overview of the staff's final safety

evaluation report. Mr. Kennedy will also explain the closure of the open item and the staff's draft safety evaluation report.

The open item has been successfully resolved, and the staff final safety evaluation report will be in management concurrence in the next few days.

As you are aware, this week the licensee identified an error in two of their accident analyses. The staff will review the licensee's effort on this error and present the findings to the Committee later on this year. I expect the final safety evaluation report to be published as a NUREG this summer.

With that, I will turn the presentation over to the licensee.

MEMBER SIEBER: Thank you.

MR. RICHARDS: Thank you, Mr. Chairman, members of the ACRS. Thank you for letting us come and present our responses to your questions. I have a number of people here to assist in the responses.

Dr. Williams is the head of our nuclear analysis section. Dr. Rowe is a special assistant to the NCNR Director.

And in the back, from my left to your right, Dave Brown is the head of our health physics section, Dan Flynn is the -- an SRO, Dan Hughes is a trainee right now in the operations section, Dr. Brand is the Chief of Reactor Engineering, and Mr. Copley is the consultant we choose from Envirotech to answer some of the climactic questions.

And I am Wade Richards, and I am the Chief of Reactor Operations and Engineering.

Dr. Dimeo was unable to be here today. He had a family emergency, so -- he is our Director. So I will be -- I will very briefly go through his description of the NIST Center for Neutron Research at the NCNR, and then we will briefly describe the NBSR. We were asked to summarize our licensing basis accidents. We will be doing that. And then, we will get into the subcommittee followup items, if that is acceptable.

The NIST reactor is a source of the NIST Center for Neutron Research and its neutron-scattering user facility, serving over 2,200 researchers annually. Our mission is to assure that availability of neutron measurement capabilities to meet the needs of the U.S. researchers from industry, university, and other government agencies.

The research done at the NCNR is highly multidisciplinary, spanning basic and applied materials research to investigate into some of nature's most fundamental questions. In most of the research done at the NCNR, neutrons are used to probe matter. In some research, the neutron itself is to be studied.

Our scientific productivity is widely regarded as the highest of any neutron facility in the U.S., most recently cited in the 2008 APS report.

MEMBER BANERJEE: How many beam lines do you have with that --

MR. ROWE: Currently about 24. I am not

actually giving you beam lines. What I am giving you is instrumented positions.

MEMBER BANERJEE: Okay. So --

MR. ROWE: Sometimes we share beam lines.

MEMBER BANERJEE: Yes.

MR. ROWE: But it is on the order of 20 to 24. A little of it depends on how you count, but it is of that order.

MEMBER BANERJEE: Well, the reason I was interested in beam lines was, where do you -- you know, how many penetrations do you get to the core?

MR. ROWE: Okay. Penetrations going in are nine beam ports that penetrate into the reactor, plus one cold neutron port, which penetrates into the vessel. Then, there are two tangential tubes which come in underneath the fuel, so they come in low in the vessel and go across, and there are four rabbit tube possibilities.

MEMBER SIEBER: Yes. I have nine radial beam tubes, two through-reactor tubes, a cold

neutron source, a thermal column, four pneumatic tubes, and seven vertical tubes.

MR. ROWE: I guess I left out those other --

MEMBER SIEBER: Okay.

MR. RICHARDS: Okay. We are one of four major neutron-scattering facilities in the U.S., but the only one not run by the Department of Energy. Reports from the White House and the American Physicists Society emphasize a number of important observations regarding this essential measurement technique.

NIST is the only facility providing a broad range of world-class measurements and capabilities. NIST has the largest user program, mainly because of the cold neutron source, and the way to reduce the gap between the U.S. and Europe is through exploiting the best neutron sources and increasing the number of beam lines and instruments. We are way behind the Europeans in neutron sources for the use of neutron-scattering.

Given the success of the NCNR and its national and international reputation for excellence, and its critical role in the NIST mission, it is not surprising that it has received and continues to receive very strong support from senior leadership at NIST and at the Department of Commerce, to operate the NIST reactor costs effectively and while assuring safety of the staff and the general public.

An example of the agency's strong commitment to the NIST Center for Neutron Research is that we are in the midst of an initiative to significantly expand our cold neutron measurement capability over the next five years as part of the American Competive -- Competitive -- Competitiveness -- America Competes Act.

(Laughter.)

NIST and the Department of Commerce will continue to remain committed to the safe, reliable operation of the NIST reactor.

Are there any questions on the mission

of the NCNR?

(No response.)

If not, I want to go into a description of the NBSR itself very briefly.

I guess before we get into the description of the NBSR, the Chairman indicated there was a question on aging of the NBSR. The NBSR reactor first went critical in 1967, and it has been operating -- started out at 10 megawatts?

MEMBER SIEBER: That's right.

MR. RICHARDS: I am looking at these gentleman because they have been there the --

(Laughter.)

-- 10 megawatts, then went to 15, and then went to 20. But in the time that we have been operating, very recently, as recently as about a year and a half ago, we did a vessel investigation with a boroscope. And we looked down at the areas in the reactor tank where the effects of aging would be greatest -- that is, at the tips of our beam tubes.

Let me go back here and point out -- the tips of the beam tubes --

MEMBER CORRADINI: You are going to have to, unfortunately, be near a microphone.

MR. RICHARDS: Let me go back to the --

MEMBER CORRADINI: You have to --

MR. RICHARDS: There it is.

MR. ROWE: That is the tip of the cold neutron penetration, the way it is pointing at -- over on the other side you can see one of the normal radial beam tubes coming in. And then, down low you can see the thermal -- the tangential tubes that run below the actual fuel --

MEMBER CORRADINI: So, Mike, just like trigger reactors, which is what I think I know, you guys come in and then you cap off, so it is essentially at the end of this so-called insertion is where you are working by the insert --

MR. ROWE: That is right. It is right in -- at the inner end is the highest flux point.

MEMBER CORRADINI: Okay.

MR. ROWE: And basically what we have done is to look at aging, look at embrittlement, and, you know, or at least as many of you know, there is an aluminum vessel. This is not a steel vessel. There is no brittle ductile transition per se.

And what you have is a continuous degradation of ductility with thermal neutron fluence, not fast neutron fluence. The amount of that reduction in ductibility depends on the ratio of thermal to fast.

What we have done to estimate the effect of aging is to look at a program that was undertaken at Brookhaven reactor, the HFBR before it was shut down, and to look at that and to compare the thermal and fast flux in that to ensure that we were comparing the right kind of radiation condition.

At the end of the license period that we are asking for at the moment, we will not have reached half of the fluence that they had reached in their testing program. And we are well within any

reasonable -- ductility is still fine. We still would meet a make-before-break criterion.

The last thing I would mention is the -- in fact, there is a very low -- as the Chairman said, there is a very low pressure vessel, and the region of highest fluence is a region of compression, not tension. Where there is no tension -- and one of the things we have in our tech spec, we look very carefully at putting anything in there which could create a pressure in there. In fact, we are doing a lot of --

MEMBER SIEBER: The phenomena of concern is the aluminum in the structure and the vessel when it captures neutrons it creates silicon. Silicon is an embrittling agent, and the -- this is not pure aluminum. This is already an alloy that has additives to it so that it is not so ductile. And for -- in the short run you may be improving the strength of the vessel back in the neutron embrittlement before it becomes ductile enough to show cracks.

MR. ROWE: Certainly, the ultimate strength is rising capacity.

MEMBER SIEBER: That is right.

MR. ROWE: At the cost of some ductility. But as I say, we have done the calculations and we satisfied that the ductility will be fine until the end of this license period.

MEMBER ARMIJO: Just an order of magnitude, what kind of strain would you expect from -- at end of life for this vessel?

MR. ROWE: What kind of strain?

MEMBER ARMIJO: Yes. How much strain? Is it like five percent strain capability without --

MEMBER SHACK: Ductility at the end of life.

MEMBER ARMIJO: Yes, ductility at the end of life, as measured by strain or a reduction in area --

MR. ROWE: I guess I can't pull that off the top of my head really quickly.

MEMBER ARMIJO: Just ballpark. You

know, is it the order of -- these are inherently very ductile materials, so big numbers are -- at beginning of life are --

MR. ROWE: It is several percent, but I --

MEMBER ARMIJO: It is several percent.

MR. ROWE: That is the -- I won't try to go any closer, because I don't trust my memory anymore.

MEMBER ARMIJO: Okay.

MR. ROWE: Maybe 20 years ago I would have remembered that, but --

MEMBER ARMIJO: You don't have any materials guys around here that might --

MR. ROWE: Paul, do you remember? Paul Brand.

MR. BRAND: I am the Chief of Reactor Engineering, and I am trained as a Metallurgist, but it is a long time ago that I have discussed this. But roughly when Mike and I looked -- last looked at this the ductility and the amount of strain you will

get when you will do a uniaxial tensile experiment would go roughly to 50 percent to one-third. That is what I remember.

Before I would go in writing on that, I have to go back to that discussion with Mike.

MEMBER ARMIJO: Okay.

MR. BRAND: But it definitely doesn't go to a fraction of a percent. It goes to -- and I cannot possibly see a mechanism that would invoke that kind of ductility.

MEMBER ARMIJO: Yes. There is no loading mechanism.

MR. BRAND: There is no loading mechanism that we can think of that would invoke this. And then, add that to the fact that the thing has become a lot stronger, I don't think that this should be a consideration at this point.

MEMBER ARMIJO: Okay. Thank you.

MEMBER SHACK: What did we say the end-of-life fluence was going to be?

MR. ROWE: It is in the documentation,

and I will look it up for you at the break. I just don't have it -- again, I am not going to pull things off the top of my head.

MEMBER SIEBER: I probably have it here.

MR. ROWE: I just don't trust my memory on this.

MEMBER SIEBER: You applied for the extension April 9, 2004. And under provisions of timely renewal, the license continues. A renewed license would be a period of 20 years from the 2004 --

MR. ROWE: I guess the question was, what the fluence rate -- what the total fluence would be. I will look it up. I just -- I just don't want to do it off the top of my head.

MEMBER BANERJEE: What is the flux? What is the flux?

MR. ROWE: The flux is on the order of two times $10^{14}$. Thermals, that is the one that counts. That is the one that matters in this case, as you know. But I will get you that number.

MEMBER SIEBER: Thank you.

MR. RICHARDS: Any more questions on the aging?

(No response.)

If not, we will move ahead on the very brief description of the National Bureau of Standards reactor. It is heavy water moderated and cooled, and it is enriched fuel, tank-type reactor designed to operate at 20 megawatts. It is actually a custom designed variation of the Argonne CP-5 reactor.

MEMBER BANERJEE: There is actually no pressure in this. It is --

MEMBER SIEBER: It is hydrostatic pressure.

MEMBER BANERJEE: Hydrostatic.

MR. RICHARDS: Hydrostatic.

MEMBER BANERJEE: And you have to pump stuff through it, I take it.

MR. RICHARDS: It really is hydrostatic.

MEMBER SIEBER: It's hydrostatic.

MR. ROWE: There is --

MEMBER SIEBER: It's vented.

MR. ROWE: -- helium pressure above the vessel, above the motor in it. It sits in a few inches of water. It really is a hydrostatic process.

MR. RICHARDS: This picture depicts the four cadmium shim arms, two on this side and two on the other side.

MEMBER SIEBER: You have to sit by the mic.

MR. RICHARDS: The four cadmium shim arms and the 30 fuel elements, you can see the top of the fuel element heads, and then the one large hydrogen cold source are shown here.

The fuel element itself is very unique. It is an MTR-type element of U-308 with an aluminum-dispersion clad. It is 93 percent enriched in U-235, has about 350 grams per element, 17 plates. There are 17 plates in the upper section, and there are 17 plates in the lower section, and

you can see that there is a gap in the middle. The plates are about 13 inches long by about 2.7 inches wide, and there should be no clads.

(Pause.)

MR. ROWE: While we have a break, let me give you the number you asked for -- two times $10^{23}$.

MEMBER SHACK: And I just -- I looked up -- the elongation of that is somewhere around eight to 10 percent. So it is ductile stuff. We didn't just decide on a number between us, but I just didn't want to give you a number without --

MR. RICHARDS: This is the seven-inch gap, which is a rather unique feature of our fuel. It is non-fueled, and this is actually on the center line of the core, so that we are actually increasing the thermalization by not having a fueled area looking right at the center line. And then, of course, there is the lower section. The overall length of the fuel is about 70 inches.

MEMBER ARMIJO: Are all of the assemblies the same -- have that gap in --

MR. RICHARDS: Yes, they are.

MEMBER ARMIJO: Okay.

MEMBER BANERJEE: And what is the -- does it have a positive void coefficient or --

MR. ROWE: No.

MEMBER SIEBER: No.

MR. ROWE: So we will get to that, because that was one of the questions asked. We are going to talk about that.

MEMBER SIEBER: All of the coefficients are negative.

MEMBER BANERJEE: Oh, okay. That is right there.

MR. RICHARDS: Yes, we just -- I tried to point it out here.

The MBSR includes many inherent capacity systems. The prompt neutron lifetime is long due to the heavy water. These are unique features of this heavy water reactor, makes everything very slow. The reactivity coefficients, void, and temperature are all negative.

As the Chairman said, the reactor operates at a very low temperature compared to what you are used to seeing, and a very low pressure. And it has no large energy content.

MEMBER BANERJEE: Does this have a lot of tritium?

MR. RICHARDS: Oh, yes.

(Laughter.)

MEMBER SIEBER: Well, I think you have to --

MR. RICHARDS: You probably have to quantify that.

MEMBER SIEBER: There are a number of replaceable things in this reactor besides the fuel. One of them is the --

MR. RICHARDS: Heavy water.

MEMBER SIEBER: -- heavy water, which is replaced basically for ALARA principles, radiation dose.

MR. RICHARDS: Operational considerations, yes.

MEMBER SIEBER: But it also aids in coolant purification. There is an online coolant purification system that is replacing the entire heavy water load, guarantees periodic refreshing of that. The same thing with the -- in fact, talking about void coefficient, one of the emergency shutdown mechanisms, the third one, is to dump the moderator out of the reactor and that shuts it down.

MR. RICHARDS: One of our passive systems.

MEMBER SIEBER: And the control rods are also replaced from time to time, depending on depletion as opposed to mechanical issues that might occur.

MEMBER BANERJEE: So is the tritium distilled off? I mean, tritium oxide or dioxide?

MR. RICHARDS: We actually have a tech spec limit on the amount of tritium that we will tolerate in the water, and it is -- when the tritium reaches the five curie level --

MR. ROWE: Five curies per liter.

MR. RICHARDS: -- we will replace the whole tritium inventory.

MEMBER BANERJEE: So you --

MR. RICHARDS: I am sorry, the whole P20.

(Laughter.)

MEMBER BANERJEE: So you don't have an online tritium removal system.

MR. ROWE: No, we don't.

MEMBER SIEBER: No.

MR. ROWE: In fact, we have always replaced the heavy water far ahead of the time that we got to five times -- to five curies per liter. If we never replaced it, five curies per liter would be the limiting concentration at the end of life, but we replace it long before then, as the Chairman said, for ALARA purposes.

MEMBER BANERJEE: So how long does it take to reach five curies?

MEMBER SIEBER: Several years.

MR. ROWE: To reach five curies, I'm

sorry, you said? Typically, we would replace it -- I am going to ask Dave Brown, who is the head of Health Physics Branch.

MR. BROWN: Dave Brown, Health Physics. I would estimate about 12 years.

MEMBER BANERJEE: Okay.

MR. BROWN: Twelve full power operating years.

MEMBER ARMIJO: What happens with the tritiated water that -- do you send it somewhere else?

MEMBER SIEBER: Yes.

MR. RICHARDS: We sent it to ACL. Take it and pour it in their reactor.

MEMBER ARMIJO: There is nobody else.

MEMBER SIEBER: Right.

MEMBER BANERJEE: Well, they know how to separate it.

MR. RICHARDS: Yes, they do.

MEMBER BANERJEE: Okay.

MR. RICHARDS: The next topic is the

licensing basis accident. We were asked to just very briefly summarize the accidents that we did analyze. The startup accident -- it is an accident that goes from 100 kilowatts to 130 percent of full power, which was 20 megawatts, at a delta rho over delta T over times $10^{-4}$ per second.

Maximum reactivity insertion accident, experiment removed .5 percent delta rho in half a second. Loss of coolant accident, inlet pipe break in the process room, offsite tritium doses with this accident were found to be well within the 10 CFR Part 20 limits.

Misloading of a fuel element, we put a fresh element in all possible locations. The loss of flow -- if you'll notice, loss of flow, we have the loss of offsite power, and there is an asterisk on that one. And there is an asterisk on the single pump seizure. That is because of the --

MR. ROWE: No, five.

MR. RICHARDS: I'm sorry?

MR. ROWE: On loss of both shutdown

pumps, the other asterisk.

MR. RICHARDS: Oh, I'm sorry. It is one missing, you said?

MR. ROWE: It is missing, unfortunately, in the viewgraph, but it should have been on number five. It seems to show --

MR. RICHARDS: Oh, loss of both shutdown pumps.

MEMBER SHACK: So, number two, it disappears and it goes to --

MR. RICHARDS: There is no issue with number two. It is just on number five.

MR. ROWE: One and five.

MR. RICHARDS: One and five. Got my asterisk in the wrong place.

MR. ROWE: And one -- five is a modification of one, in which the shutdown pumps don't start up.

MR. RICHARDS: And the asterisks are there because of this situation with the coast down curve, which we will talk about.

MEMBER SIEBER: Right.

MR. RICHARDS: Throttling of the inlet valves to either plenum, and the spurious signal closing of DWV-19. This is one of the ones that you identified -- you folks asked about, and that we have done the analysis on now. And, of course, the MHA, maximum hypothetical accident, postulates a complete melting of an MTR-type fuel. And even after that melting, complete melting, we still satisfy the 10 CFR 100 limits at our site boundary.

Now, the open item that was discussed before is the fact that when we were actually doing the analysis for DWV-19, we decided to start looking at a number of flow situations besides that one, and we found that the 20-second coast down curve that is in the present SAR, and also mentioned in the SER, is incorrect. And we let the non-power branch know that what we wanted to do was do some recalculations on that coast down curve.

We are collecting the data tomorrow. We will actually get -- the reactor portion is down

right now. We will collect up all of the data tomorrow, and then send the analysis off to BNL to run the RELAP code for us, and we should get some updated coast down curves.

We consider this situation analogous to -- analogous, and bounded by the way, by the DWV-19 valve situation, which we have analyzed, because that is a complete loss of flow. So we -- as the Chairman stated, we will be coming back to you probably in a month, or whenever we can get back on your calendar, with an analysis of a new coast down curve.

VICE CHAIRMAN ABDEL-KHALIK: What is the worth of a control rod in --

MR. RICHARDS: The control rods are usually worth eight to sometimes even $10.

MR. WILLIAMS: Bob Williams. The group of them together is more than $30. So roughly eight to $10.

VICE CHAIRMAN ABDEL-KHALIK: So where did the .5 percent delta rho in half a second come

from then?

MR. WILLIAMS: That is from the removal of the -- an experiment from the core with the maximum reactivity allowed.

VICE CHAIRMAN ABDEL-KHALIK: But it doesn't have anything to do with the --

MR. WILLIAMS: No. Actually --

VICE CHAIRMAN ABDEL-KHALIK: -- kind of failure?

MR. WILLIAMS: -- the startup accident has to do with it. The reactivity insertion rate there is our tech spec limit. So we just assume that that reactivity insertion rate continues unabated from 100 kilowatts to -- is it 100 kilowatts? To full power, yes.

MR. ROWE: Until it's --

MR. WILLIAMS: Without a period scram.

VICE CHAIRMAN ABDEL-KHALIK: Thank you.

MR. WILLIAMS: That is the maximum reactivity insertion rate, and then the other accident is the experiment, the highest worth

experiment.

MEMBER SIEBER: I just might add at this time you have the SER -- SAR available to you. It's Figure 4.9 -- 4-9 in the SAR, that compares the curve of flow coast down for -- that was used in RELAP versus plant data that existed at the time. And the issue is not so much the displacement of the curve but the slope, as I see it. And the coast down slope looks to be steeper, a little bit steeper, for the actual plant data than the curve used in RELAP.

MEMBER BANERJEE: So I presume that the mode of cooling -- and I think we may have addressed it -- is natural circulation when the pumps --

MR. RICHARDS: Yes.

MEMBER BANERJEE: Now, you said a way to chop this thing down is to dump the heavy water, right? So what happens when you dump the heavy water?

MR. ROWE: It is not dumped all the way.

MEMBER BANERJEE: Oh. You just dump --

MR. ROWE: We don't empty the vessel. We drop it down until the top reflector is removed.

MEMBER BANERJEE: And that is enough --

MR. ROWE: And that is enough -- that is enough to give us a shutdown margin against full removal of all four amounts.

MEMBER BANERJEE: So when you drop it to that level you still have sufficient natural circulation to keep it cool?

MR. ROWE: No. No, you would want the pump running. And we don't use that -- that's a backup shutdown mechanism.

MEMBER BANERJEE: Normal shutdown is with the rods.

MR. ROWE: Normal shutdown is with the rods, and then we leave that water there. But where the level drops to the natural circulation would not be as good as we would want to have.

MR. WILLIAMS: One more thing. Bob Williams. Our inner reserve tank, then, would empty into the fuel elements in the case that they dropped

the moderator level. So there would be cool reporting on top of the fuel.

MEMBER SIEBER: Yes, cool --

MEMBER BANERJEE: From heavy water.

MR. WILLIAMS: Yes. Yes.

MEMBER BANERJEE: And where is your heat sink in this problem?

MR. ROWE: When it's in natural circulation? There is a vessel plus the core support structures plus the biological shield.

MEMBER BANERJEE: Thanks.

MR. ROWE: Okay.

MR. RICHARDS: The next area to cover is the actual response to the items that the Committee came up with from our last meeting. I would like to ask the Chairman -- I am not exactly sure how to proceed here. There are over 19 of these items, and we can either address the ones that you have -- you have all had the writeups. We can either address the questions that you have or I can go through each one and -- with a small summary.

MEMBER SIEBER: I think that would be pretty time-consuming to do it that way, particularly since the answers that you provided us and the staff provided us are so thorough. What I had initially asked members to do is to look at the list that I -- we had handed out to them, to find the questions that they asked, and if they are satisfied with the answers, so be it. If they have further questions based on what they read as responses, then they should feel free to ask those followup questions.

MEMBER RAY: Well, Jack, I have done as you asked, and I will start, if it's okay, with the following question.

MEMBER SIEBER: Okay.

MEMBER RAY: The subject is groundwater monitoring, and I have read the answer, the response. And I know I am not an expert in this. Maybe Mike Ryan --

MEMBER RYAN: Could you jump in on what question it is, please, just what page you are on?

MEMBER RAY: I would if they were numbered. It happens to be on page 6 of my -- the copy I have, Mike. It's entitled ground --

MEMBER SIEBER: The pages are numbered.

MEMBER RAY: -- groundwater monitoring. I don't have a numbering of them. I have it by titles. Anyway, as Jack has said, it is a complete response referring to this having been looked at by URS, and USGS I guess.

But the conclusion seems -- can I say sort of hedged? And the rationale provided is -- I would just say reads like it is sort of, well, this is the best we can surmise. It ends by saying there appears to be a technically adequate approach to monitoring potential offsite migration of constituents in groundwater.

So, anyway, it just seemed to be like less than the kind of response we would expect normally. And I wondered if there was anything stronger that could be said.

MEMBER RYAN: The first rule of geology

is you always want to dig one more hole.

MEMBER RAY: Well, Mike, while I am talking here, read it yourself and see what you conclude.

MEMBER RYAN: No. I appreciate your point that it is not as definitive as one might like.

MEMBER RAY: You are a better judge of this than I would be.

MEMBER RYAN: I guess the proof is in the pudding on the second question. I am interested in -- because the second question informs whether we need to push the first question further. And you told -- let's see, it is the one regarding the tritium. Maybe it is not on that page, it is one later on.

MEMBER RAY: Right below it. Member Ryan asked about the applicant's environmental monitoring. You know, you say monitoring for tritium, and you never really said what your finding -- you are saying it is below the drinking water

standard, but is it 1,000 or 2,000 or 19,600?

MR. RICHARDS: I'd refer to Dave.

MR. BROWN: Dave Brown, Health Physics. I guess I am wondering, what is your exact question?

MEMBER RYAN: Well, in the groundwater monitoring results you monitored for tritium. Can you give me a range of values that you see in groundwater?

MR. BROWN: Zero.

MEMBER RYAN: It is not zero. It is background.

MR. BROWN: Oh, it is background, excuse me.

MEMBER RYAN: Okay. So background in your area is 1,000? 800? What is the background you measured, do you know, have a range of numbers or --

MR. BROWN: Background --

MEMBER RYAN: For tritium.

MR. BROWN: -- for tritium?

MEMBER RYAN: Yes, picocuries per mL.

MR. BROWN: Picocuries per mL we are measuring -- our lower level detection is on the order of -- I am trying to convert picocuries per mL. It is like 10 -- a couple dpm per mL, and we don't see anything above that.

MEMBER RYAN: Okay. That is really, really low.

MR. BROWN: We don't measure any positive results in our environmental samples.

MEMBER RYAN: Really? Okay. All right. Thank you. That is fine.

So if the numbers are at or near background, and they are not creeping up or you don't see any trends, that is my --

MR. BROWN: That's correct.

MEMBER RYAN: -- second question, you don't see any trends up or down because you are not measuring anything. I don't mean to be critical, but there is two reasons. You are not looking in the right place, which I am thinking you are looking

in the right place, or the numbers really confirm that there is no area of concern.

So I guess with that, Harold, I am satisfied that if the tritium values are very low compared to the drinking water standard that it is reasonable to conclude that, you know, they are okay.

MEMBER RAY: I will accept it on that basis, then, and I really wasn't going to say I wouldn't accept it anyway. I just want to draw attention to the fact that it was a very qualified and hedged answer about why the sampling points were adequate.

MEMBER RYAN: The proof is in the numbers in the samples to me. That is where you really gain confidence in statements that are equivocal, you know, about what is actually happening.

MEMBER RAY: Yes. Well, I had a leaking spent fuel pool, and we never found anything until we dug it up. But that is okay.

MEMBER BANERJEE: How do you know to dig it up?

MEMBER RAY: We decommissioned the plant.

MEMBER SIEBER: Don't have to worry about shutting it down then.

MEMBER RAY: Okay. Anyway, that is -- the other one I had was on this issue of what we would normally refer to as the tech specs on the diesel generators. The answer is we don't need them anyways. They are just there as backup.

It is a little confusing, because, you know, these things are always for backup. But I -- in this case, I think what Jack said at the outset is probably the right way to look at it, which is at such low power density, and so on, that it is inherently safe without emergency power -- electrical power supplies.

So the fact that you have them out of service for an extended period of time is not something we would take exception to I guess. So,

anyway, those are the two questions I had.

MEMBER RYAN: I can finish up pretty quick, Jack, if it's all right.

MEMBER SIEBER: Okay. Go ahead.

MEMBER RYAN: I really appreciate the experimental review flow diagram, and so forth, that you provided. It certainly answered my question there.

And then, I guess on the waste question you really have until the end of facility lifetime to store waste, so --

MR. ROWE: Yes.

MEMBER RYAN: And, again, I am not looking for a further followup question, but you addressed the, you know, access and personnel control, and that kind of thing, I am sure in your in-house procedures for who can get in, when they can get in. Are you going to get to any kind of inventory where you would be, you know, of concern of how much inventory you had? Are we talking curies or thousands of curies?

MR. RICHARDS: I am not aware we are going to get to that level, are we, Dave?

MEMBER RYAN: And I would permit it for storage separately from the operation of the reactor I guess.

MR. BROWN: Dave Brown, Health Physics. Right now there is reactor-produced material, and it is included within the reactor license.

MEMBER RYAN: So they are authorized to store that onsite, right?

MR. BROWN: As far as I know, yes.

MEMBER RYAN: Well, how many curies of stuff do you have in inventory in waste?

MR. BROWN: Right now?

MEMBER RYAN: Yes.

MR. BROWN: Well, we just did a shipment in June before the site closure, so we are very low.

MEMBER RYAN: So very low.

MR. BROWN: Millicuries.

MEMBER RYAN: Where would you get -- I mean, what do you think -- and, again, I am asking

for an insight, so please don't take this as a question, but where would you anticipate accumulation might cause you some operational, you know, concerns, where you are going to be more focused on managing the waste in storage than you are now?

MR. BROWN: Well, our plans are pretty straightforward. It is passive storage. When we reach a level to where we normally would ship, if there is no site available to ship it to we will put it in the same type of package, transfer it to one of these storage facilities, and put the sealed lead on it and wait for a --

MEMBER RYAN: Around the storage areas.

MR. BROWN: Yes.

MEMBER RYAN: Yes, okay. And how many years in between shipments did you go?

MR. BROWN: Four to five.

MEMBER RYAN: Four to five.

MR. BROWN: That is for the Class C waste.

MEMBER RYAN: Right. Okay. Thank you. That's it. I just -- that is good enough detail. I appreciate the followup. Thanks so much.

MEMBER SIEBER: Okay. Does any other member have followup questions to the questions that they posed at the last meeting --

MEMBER STETKAR: Yes.

MEMBER SIEBER: -- based on the answers?

MEMBER STETKAR: A few, and I know we are short on time here, so --

MEMBER SIEBER: Go ahead.

MEMBER STETKAR: The DWV-19 closure, I really appreciate all of the analysis you did, but a couple of questions. One is the conclusion is that the maximum temperature remains quite low for at least a couple of hours, if not longer than that. And you make the statement that there has been ample opportunity to reopen the valve and provide supplemental cooling.

If you can't open the valve, suppose you can't open the valve, it has fallen apart, are there

other -- you mentioned other vent paths and things like that, and I couldn't find -- I didn't have enough wherewithal to go try to search through different drawings, because part of the question was also on venting -- vent capability. Are there enough vent paths available that you could remove heat, you know, in the event that you couldn't get that valve open, if the gate --

MR. ROWE: We have enough vent paths that we don't have to worry about pressure, in spite of the fact that DWV-19 remains closed. We are vented as well as -- we have vents equivalent to the one that is beyond the pipe. But heat transfer goes -- we actually have done measurements looking at what happens over -- for a long period of time. We would be fine for a long time.

MEMBER STETKAR: Okay. Okay.

MR. ROWE: It has been measured. And I can't give you a good calculation.

MEMBER STETKAR: Well, that was my sense. I was just curious whether there was

something magic about this couple of hours, and we would have enough time to --

MR. ROWE: The statement about a couple of hours is under normal circumstances what we would do is -- as soon as we had the problem, we would go down, and there is a disconnect for the automatic operator. We would use that disconnect and close them manually.

Now, if the valve completely failed, that is not -- that is obviously not what we are going to do. Well, I guess you wait for it to happen, understand the question, and then we would be fine. We would have to --

MEMBER STETKAR: I was --

MR. ROWE: -- understand how to deal with it over the longer term.

MEMBER STETKAR: Occasionally valves fall apart.

MR. ROWE: Occasionally valves fall apart.

MEMBER STETKAR: Not very frequently.

That is enough, because of the time.

Responses on -- we had questions on the general topic of single failure criterion. But you made the statement that says because you only have one DC bus, one DC power supply is adequate because DC power is not necessary to achieve or maintain safe shutdown. That was a simple --

MR. ROWE: Right.

MEMBER STETKAR: -- sentence. There were a couple of amplifying paragraphs after that sentence, but those paragraphs basically describe redundancy and instrumentation and things like that that -- it is not clear if you had -- if you didn't have any DC power you would have any instrumentation.

So I was curious, what is the basis for the statement that said DC power is not necessary to achieve or maintain safe shutdown?

MR. ROWE: Let me first try and explain what the supplementary paragraphs were intended for, and then try to answer your actual question. In the

supplementary paragraphs we are addressing the question which had been asked about diversity of detection capability.

And there was some question -- and I don't remember who asked the question anymore, but anyway there was a question about, was it really a single detector in which the failure --

MEMBER STETKAR: Okay. Those are not relevant to the --

MR. ROWE: But safe shutdown goes -- we can scram, and after rescram that is all we have to do. With DC power you are not required to scram.

MEMBER STETKAR: Right.

MR. ROWE: And we can scram. And the reactor, when it has scram, it will just sit there.

MEMBER STETKAR: Okay. Okay. That's what I thought. I got a bit confused whether the second --

MR. ROWE: I'm sorry.

MEMBER STETKAR: -- was somehow a qualification of that first statement somehow.

MR. ROWE: And then, the only other ones I had were I understand now -- thank you very much -- I had a question about scaling of the return period or the frequency on high wind speed, the 100 mile per hour wind speed. And I understand now how the calculation was performed. It is not -- still not clear to me how data derived from wind speeds in Kingston, Jamaica, are necessarily relevant to scaling of wind speeds in Rockville or Gaithersburg, Maryland.

What I -- that is just a whiny statement in a sense. The real question I had was I understand now how the numbers that you used were calculated. My question was: how do you account for the actual historical data that I pointed out in the subcommittee meeting about high wind speeds measured here in the greater metropolitan D.C. area?

And there is a paragraph -- and I honestly don't understand -- it is on page 22 for the other Committee members, the middle of the page. And I would like you to explain to me a little bit

better what that discussion means about -- it starts off, "These data points are relevant only to the extent," and so forth. So if somebody could help me out on that, I would really appreciate it.

MR. CROSBY: Good afternoon. My name is John Crosby. I am with Envirotech. I am a consultant to NIST on the project. We did the climate study.

It is an interesting question. Let me just read through. Is your question at the end, the last sentence, sir, about the --

MEMBER STETKAR: It was actually the whole paragraph.

MR. CROSBY: The whole paragraph.

MEMBER STETKAR: Well, yes, the whole -- I was trying to understand a little bit better what the --

MR. CROSBY: There doesn't seem to be a method to incorporate data that happened, and I will say yesterday, not in a sarcastic way, but in the recent future to put those into the tables that are

used in these volumes provided by ASME and others. So, in effect, something that happened in the last few years hasn't been incorporated and would -- but would be incorporated in the next update of the volume.

MEMBER STETKAR: Oh. Is that -- oh.

MR. CROSBY: That is what we are trying to say.

MEMBER STETKAR: Ah. That is --

MR. CROSBY: I apologize.

MEMBER STETKAR: Okay. Now I understand what you are trying to say.

MR. CROSBY: Then, what we tried to do was explain that in the old days -- in recent past they would use the highest wind data per year, the one epochal data point.

MEMBER STETKAR: Okay.

MR. CROSBY: Currently, they are using what they call peaks over threshold, so they are trying to determine what is this threshold supposed to be, and then any time the wind goes above that

that data point would count, which makes it a much better data set, much more realistic.

So they could -- because there could be many data points above this threshold. And that was the last sentence where apparently there is an ongoing discussion point about what that threshold would be, so --

MEMBER STETKAR: Oh, okay. Thank you. I now understand what that paragraph means. I am not sure if it answers my original concern, because I think --

MR. CROSBY: Well, the original concern --

MEMBER STETKAR: The original concern was basically taking your -- the curve that you show in Figure 1, which is derived from data in Jamaica --

MR. CROSBY: Yes, right.

MEMBER STETKAR: -- and saying how -- how would that curve change if I actually looked at historical wind data for this area?

MR. CROSBY: Right.

MEMBER STETKAR: Which in principle you could do.

MR. CROSBY: I would refer you then to that Table C6-7 at the top of page 22. The data from Kingston, Jamaica, because of the fact that it is a well-instrumented island, they are able to collect a lot of data there over a number of years, and they developed the numbers in Table 1 on page 21 as well as confirmed this reverse Weibull curve, which is the curve on the top of page 21.

What they show is that the numbers are actually higher than what the current ASCE shows in that Table C6-7. So --

MEMBER STETKAR: But that is an average of the continental United States, and I am talking about --

MR. CROSBY: Right.

MEMBER STETKAR: -- you know, the D.C. area.

MR. CROSBY: But we have --

MEMBER STETKAR: Which might be better or worse, but I don't know.

MR. CROSBY: Right. Well, the wind curve data, though, that we -- I hate to keep flipping here. Let me just go back a minute. There are wind speed charts, if you will, like the one we show on page 19. While it is in wind pressures as opposed to velocity, you can basically see that we are in a very, very low wind area compared to, say, the south tip of Florida, which receives hurricanes, or the Outer Banks. Those darker areas have much, much higher potential wind velocities than we do.

MEMBER STETKAR: Yes.

MR. CROSBY: I think if we were on the coast, we would have a much bigger concern about the winds than we do here from hurricanes.

MEMBER STETKAR: Thanks. And because of the time, I -- you have explained -- I understand. Thank you very much.

MR. CROSBY: You're welcome.

MEMBER SIEBER: John, any further

questions?

MEMBER STETKAR: I don't have -- I have some for the staff, but we need to get them --

MEMBER BROWN: Just one other one on the radiation monitors. You talk about -- this is on the redundancy. How did you get redundancy? And you mentioned your basic reactor monitoring devices. You are required to have a redundancy by your tech specs, I presume. So you've got two, and I presume one out of two is enough to shut you down on any one of the particular functions, is that correct?

MR. ROWE: That's correct.

MEMBER BROWN: Okay. And then, you went on to talk about the radiation monitors for airborne radioactive material. You said you had two detectors monitoring the normal air and irradiated air drawn into the building air exhaust system. And I didn't quite catch -- and you had -- your third one was actually monitoring stack exhaust.

MR. ROWE: Yes.

MEMBER BROWN: So I am not quite -- what

is this -- you said measure normal air. Is this from outside the building, bringing it in into the intake? Are you talking about normal air into the exhaust or irradiated air into the exhaust?

MR. ROWE: Let me try, and if I get in trouble I will bring Dan Flynn in. We have two different air systems within the reactor, two different ventilation systems -- one that we call normal air, which is just taking air out of the normal places, others that we call the active air system, where we -- there are actually places where we expect that we might have a problem, close to the beam port, places where we might generate argon.

So those are the two systems, but they are both taking air from inside the reactor and taking it to the outside.

MEMBER BROWN: Okay. So there is one detector in each of those, and each one of them is supposed to cause a scram, if it detects radiation according to the statements in here. Okay? Is that correct?

MR. ROWE: I'll let Dan --

MR. FLYNN: Dan Flynn, Reactor Operations.

MEMBER BROWN: There is three of them. There is normal air, irradiated air expected places, and then there is the stack, stuff going out to the environment.

MR. ROWE: Right.

MEMBER BROWN: So just two of those three?

MR. FLYNN: We need two out of the three. Dan Flynn, Reactor Operations. We need two out of three. Each channel will give you a scram.

MEMBER BROWN: But two out of -- oh, you need two out of three to be operational? Is that what you mean?

MR. FLYNN: That is correct. Each channel will give you a scram at 50,000 counts.

MEMBER BROWN: Okay. All right. Thank you.

MEMBER SIEBER: Any additional

questions?

MEMBER ARMIJO: Just a couple of things on the spent fuel pool. I asked questions about that.

I was looking for any issues related to accidents, and not necessarily criticality, but, you know, things dropping on the fuel, misloading, which actually is a criticality event. So that is what I was looking for, but I -- I think you pretty much answered that question.

But in the case of the criticality analysis, you do some very conservative analysis. And do you or don't you take into account the Boral in your racks?

MR. WILLIAMS: No, I do not.

MEMBER ARMIJO: You do not.

MR. WILLIAMS: I did not take into account any poisons when I did those calculations. And I didn't take into account structural material either. I just put the fuel in the geometry that it is with water and concrete. The only exception was

one rack had stainless steel cans, and I put the stainless steel there. But that doesn't make a huge difference.

MEMBER ARMIJO: Which are the racks that have the Boral? Is it most of your racks?

MR. WILLIAMS: No. Two of them do, and two of them don't. There is a rack that holds 24 elements I think, 22, that -- whether it's Boral separating the pairs of elements, that are just in two rows. And then, the combination rack that has one row of fuel elements and shelves with fuel pieces. The fuel pieces would be one section of our fuel element, just where the plates are.

MEMBER ARMIJO: In your operations, do you have to assure yourself that the Boral is still effective? You know, there is a current issue in power reactors that some Boral is losing its neutron capture ability.

MR. WILLIAMS: I heard that. I don't -- I don't really know. But that is why I didn't include it in the calculations.

MEMBER SIEBER: Right.

MEMBER ARMIJO: So it is not in your calculations.

MEMBER SIEBER: Not in the --

MEMBER ARMIJO: It is in the safety analysis that --

MR. WILLIAMS: That is correct.

MEMBER ARMIJO: Okay.

MR. WILLIAMS: Just in case.

MEMBER SIEBER: Okay.

MEMBER ARMIJO: All right. Thank you.

MEMBER SIEBER: Any further questions?

MEMBER BANERJEE: I just have a general question. What is the largest sort of credible penetration that could break, and how long would it take your tank to drain them? Is there a penetration into the tank that could conceivably break? And, if it did, how long would it take the tank to drain through that?

MR. ROWE: The answer to the first question is not in any credible way that we have

found. We have calculated the worth of flooding the tanks, and that is all well within the controls of --

MEMBER BANERJEE: There are no pipes leading in/out of the tank?

MR. ROWE: Well, only the one that we analyzed in the loss of coolant accident. We did an analysis without -- without saying how it happened, and said that we had a rupture in the lower part under the reactor, we had a complete rupture. I don't remember the time it took to drain, but that is one of the accidents that we actually analyzed.

MEMBER BANERJEE: And you made up --

MR. ROWE: But that would be the fastest way to drain it that I know of. I can't think of a faster way to drain it.

MEMBER BANERJEE: Yes. I wasn't at the subcommittee meeting, so I -- so you did analyze that.

MR. ROWE: We analyzed the loss of coolant.

MEMBER BANERJEE: Emergency water which is --

MR. ROWE: Yes, we do. We have a completely passive emergency tank, which will start to drain. That is adequate for half an hour. With a single reactor operator intervention, we are good for a couple of hours. Following that, we have backup systems to either use potable water or to bring the heavy water back up from where it is collected in the process room and feed it back in.

MEMBER SIEBER: We are running a little bit behind time, so if there are additional questions that are important to the process, let me know now. If not, I would like to thank the applicant for being well prepared and responsive to our questions and concerns, and invite the staff to just summarize the preparation of their SER.

And while they are getting ready to do that -- and thank you very much -- I will point out that because of the complexity of licensing and relicensing of Type 104 reactors there is a standard

review plan which each of you got a copy. It is NUREG-1737, and it was published about 13 years ago.

Volume 1 tells applicants how to write their final safety analysis report and tech specs. Volume 2 tells the NRC staff how to review it and what the acceptance criteria are.

This process that NIST has gone through now has basically updated the FSAR, since they are not required to annually update the FSAR for this type of reactor, as power reactors are required to do.

And so the review job is extensive. The SER has been provided to all of you electronically. At least I got a paper copy of it, which I will give to anybody who wants it. And maybe you can summarize the findings and conclusion from your review.

Thank you.

MR. KENNEDY: Okay. Thank you. Good afternoon, Mr. Chairman, and distinguished members of the subcommittee. My name is William Kennedy. I

am the NRR Project Manager for this license renewal. I want to thank you all for being here, and also thank the members of the subcommittee for raising some good concerns that really helped us to improve the process overall and the review of the application.

And my goal today is just to provide common understanding for everyone regarding our conclusions in the safety evaluation report or resolution of the open items. And also, if there are any additional questions regarding your concerns from the subcommittee meeting, I can try to address those as well.

What I am going to cover briefly is the licensing history, the staff review criteria, overview of the safety evaluation report, resolution of the open item, and I can mention again briefly the additional open item if there are more questions on that.

This reactor was originally licensed for construction in 1963, and received a provisional

license from the Atomic Energy Commission for short-term operation, kind of start up and verify the reactor was operating as designed. That was in 1967.

They got their 15-year license in 1970. They applied for a license renewal and a power uprate in 1980, and that was -- the license was issued in 1984. And we recently received the application in 2004 for the current licensing action.

Some of the requirements have already been covered, so I am going to go through these briefly. Part 54 does not apply to test reactors, and there is a statement in the Atomic Energy Act calling for the minimum amount of regulation necessary for the NRC to complete its obligations under the Atomic Energy Act.

MEMBER CORRADINI: Just for background. The Section 104, that was instituted for primarily test reactors or for what was the -- what you know to be the historical intent? I assume --

MR. KENNEDY: Research and test reactors, yes. The test reactor criteria that applies in this case is that the power level is over 10 megawatts, not that they do excursion testing or fuel testing. It is just based on power level alone.

MEMBER CORRADINI: And then, this goes down to a level of what? The Section 104 goes down to any power you want.

MR. KENNEDY: Yes.

MEMBER SIEBER: If it's critical, it's in there.

MR. KENNEDY: We have five watts and --

MEMBER CORRADINI: I just wanted to make sure. Thanks.

MR. KENNEDY: This has already been covered. Just to clarify, Part 100 is applicable to test reactors, but it is only -- only the part about accident doses. The seismic appendix is not applicable.

This is our standard review plan, NUREG-

1537, and we are doing the application and also associated reg guides, standards, and other NUREGs.

These are the areas we reviewed. Seismic and groundwater monitoring fall under the siting criteria; the structures, systems, and components; reactor characteristics like the moderator, void, and temperature coefficients; electrical power systems, including the backup power systems that are provided for defense-in-depth, their experiment program.

We spent a lot of work on the accident analyses and also rewrote essentially the technical specifications to conform to the format of the current standard. And we also looked at prior use of reactor components, which you would call aging.

These are the principal safety conclusions that we reached as a result of our review. We found that the structures, systems, and components that are important to safety continue to be acceptable, and we can expect them to ensure safe operation of the facility. We also concluded that

the licensee's management organization is acceptable to maintain and operate the reactor safely.

The research programs at the reactor, including a failure of those programs, will not pose a significant risk to continued safe operation. They do have limits in their technical specifications that cover the experiment program, and those limits were appropriately analyzed for accidents.

We also concluded that routine exposures will be below the limits in Part 20 for members of the public and personnel at the facility, and there won't be any releases to the environment in excess of the concentration limits specified in Appendix B to Part 20. And they also have provisions for maintaining doses as low as reasonably achievable.

MEMBER CORRADINI: Just for my own edification -- I should have asked the licensee, but you probably know -- what is the curie content of tritium residing in the reactor on a basis?

MR. KENNEDY: The number of curies

total?

MEMBER CORRADINI: Yes, approximate.

MR. KENNEDY: I don't know that number. We heard that the --

MEMBER CORRADINI: Or how about --

MR. KENNEDY: -- concentration limit was five curies per liter of primary coolant.

MEMBER CORRADINI: Is it significantly below that?

MEMBER SIEBER: Yes.

MR. KENNEDY: I would ask the licensee to clarify that.

MR. BROWN: Dave Brown, Health Physics. We are currently about 1.1 curie per liter.

MEMBER CORRADINI: How many liters do you have? How many liters do you have in the vessel?

MEMBER SIEBER: It is six feet by 12 feet, so --

MEMBER CORRADINI: So it is like about 100,000 curies.

MEMBER BLEY: What are you just before you discharge and start over again? How high does it get?

MR. BROWN: Historically, anywhere between one and a half to two and a half curies per liter. It is about 100,000 pounds of $D_20$ in the system, so convert that, maybe 40,000 liters.

MEMBER SIEBER: Right.

MEMBER CORRADINI: Thank you.

MR. KENNEDY: Okay. And we also concluded based on our review of the accident analyses that the licensee has conservatively considered a range of accidents, including a maximum hypothetical accident that is bounding in its consequences. And the radiological consequences of this maximum hypothetical accident are below the guidelines in Part 100, and actually well below the limit for members of the public in 10 CFR Part 20. I think total dose was around eight millirem, I believe.

I mentioned that we -- there was a lot

of work done to update and get the tech specs into conformance with the standard, and found -- we concluded that those tech specs and the operating license provide reasonable assurance that this facility can be operated as it has been analyzed, and that that won't lead to any adverse consequences to public health and safety or the environment or facility personnel.

And we also found that there has not been any significant degradation of structures, systems, or components related to safety, and the surveillance requirements in the technical specifications ensure that any degradation will be caught in a timely manner and remedied.

MEMBER STETKAR: Can I ask about the -- this came up at a subcommittee meeting. We had a few questions about surveillance requirements. I wanted to ask you because the response that we received from NIST explains a rationale. Is the staff okay with the fact that NIST is essentially taking a number of exceptions to the surveillance

intervals specified in the ANSI ANS standards?

You know, for example, quarterly tests, quarterly functional testing of pumps, they say, well, once a year is good enough because their experience is that they haven't had any pump failures. And the staff is okay with that?

MR. KENNEDY: Yes. Not -- we are not okay with it purely based on your statement that they haven't had any pump failures, so let's extend the surveillance requirement.

MEMBER STETKAR: But, I mean, you --

MR. KENNEDY: Based on other considerations, including ALARA and the number of redundant systems they have, the quarterly testing -- annual testing I believe is what the new requirement is, would be adequate.

MEMBER STETKAR: I just wanted to be sure that you thought about that. I mean --

MR. KENNEDY: Yes.

MEMBER STETKAR: -- you can do --

MR. KENNEDY: Yes.

MEMBER STETKAR: Okay.

MR. KENNEDY: And I had a discussion while I was at the site for the seismic walkdown about the emergency power surveillance requirements or the backup power surveillance requirements. And the diesel -- the diesel surveillance requirement is in conformance with the standard. It is less restrictive than their old surveillance requirement, but it is in conformance with the standard.

And based on their operational experience with the backup battery, the slow decline in performance of that battery would be caught by annual surveillance before it became an actual issue. The battery is double the size it needs to be, and the degradation is not a rapid process that wouldn't be caught.

Not discussed here, but also in our review, were the physical security plan and the emergency plan. They were both found to be acceptable. And, finally, we concluded that the continued operation of this facility does not pose a

significant risk to public health and safety, facility personnel, or the environment.

In terms of the open item, it was a timing requirement in their operator training and requalification program. They simply changed that requirement to be -- to meet the regulation. That is all documented.

MEMBER SIEBER: Right.

MR. KENNEDY: If there are any other questions about this new open item, I can briefly address them. Otherwise, I think everything that we know now has been said.

MEMBER STETKAR: I don't have any on the additional ones, but I did have one that I wanted to ask you. And this is -- I -- one of the questions I had on the meteorological stuff was rain-over-snow loading on the roof and how that analysis was done. The response essentially says that the ASCE requirements basically don't require you to add rain loading as long as the expected snow loading is greater than, whatever it is, 20 pounds per square

foot or something like that.

Now, I know historically the staff has always required a rain-on-snow loading. What is your position on that? Are you willing -- do you accept the fact that -- essentially, what they are saying is it doesn't make any difference how you do the rain-over-snow loading, because basically they are not required to do that according to the ASCE standard, which is true if you read the standard.

MEMBER SIEBER: It has to meet the local building code.

MEMBER STETKAR: It has got to meet the local building codes, but I --

MEMBER BROWN: Right.

MEMBER STETKAR: -- know in other types of licensing applications the NRC staff has required, despite that, that you have to put the rain on top of snow. So it is --

MEMBER BLEY: Which nature does.

MEMBER STETKAR: Which nature does also. But, I mean, theoretically the ASCE thinks about

the nature of that. So I was just curious whether the -- if their essential statement that they don't really need to do that, and, therefore, however they add the rain doesn't make any difference is -- is kind of an acceptable position to the staff.

MR. KENNEDY: Well, if they hadn't provided that in the application, if they had just provided the standard in the application and we reviewed that, that would have been acceptable.

MEMBER STETKAR: That would have?

MR. KENNEDY: According to our guidance, yes.

MEMBER STETKAR: Okay. Thanks. That is all -- that is basically what I was asking.

MEMBER SIEBER: That is the requirement, and you have met the requirement.

MR. KENNEDY: Once I saw their -- that statement in their response to our RAIs to address your concerns, I felt that what they had done originally was a conservative analysis and acceptable.

MEMBER STETKAR: That is true. And the reason I didn't ask them about the analysis is I just wanted to make sure the staff was okay with just meeting the standard, because I am familiar with other applications where people have made that argument and the staff has come back and said, "Well, that is not the way we want you to do the analysis." So thanks. That is it. I am happy.

MR. KENNEDY: That is all I have, unless there are other questions.

MEMBER SIEBER: Okay. We are running a little bit behind. I appreciate the work that the applicant has done, and also the staff. In my tenure with the ACRS, that is one of the nicest jobs I have had dealing with both the applicant and the staff, and very interesting.

I think that both have been thorough in the performance of the update of the FSAR, and the rethinking of some of the accident analysis where there was questions, and also in the development of the technical specifications. And so I thank all

for the effort that has been placed to this project.

And with that, Mr. Chairman, I turn it back to you, just a minute or two late.

CHAIRMAN BONACA: No, just on time.

MEMBER SIEBER: Okay.

CHAIRMAN BONACA: We will take a break. Come back at 2:45.

(Whereupon, the proceedings in the foregoing matter went off the record at 2:29 p.m. and went back on the record at 2:46 p.m.)

CHAIRMAN BONACA: Let's resume the meeting.

The next item on the agenda is the draft final Regulatory Guide 1.211, Qualification of Safety-Related Cables and Field Splices for Nuclear Powerplants. And Otto Maynard will take us through the presentation.

MEMBER MAYNARD: Thank you, Mr. Chairman.

I never thought cable qualification could be so exciting until I got this --

(Laughter.)

We previously reviewed this subject last September, and during that meeting some of the members questioned the scope. We had some questions on things, and there was also a little bit of confusion over some of the changes, and that wasn't necessarily all the staff's fault; it was the documents we were looking at. So we thought it best to come back and discuss it at a future meeting, so that is what we are here today for.

We will be hearing from the staff, and then we also have comments from NUGEQ. I think all of you got a copy of the letter from NUGEQ on the -- some of the issues and concerns that they had, so we will be hearing from them at the end of this meeting, too. So I want to make sure we leave time at the end.

A couple of things I will point out that at least from what I read has changed, and the staff and NUGEQ can both correct me if I am wrong. One of the key things on the position of condition

monitoring, the scope has changed. That is one of the areas that we -- some of the members have questioned a subset of risk-significant, safety-related. And I believe now the scope is for basically what is in the maintenance rule.

And I also want to just point out, as we are listening to the staff here, and then get to the NUGEQ, the NUGEQ is challenging the need for the condition monitoring, whether the data really supports the need for that, and also the scope of -- we thought the original scope that the staff had was better than what it is now, and then also the special condition monitoring, that it lacks some specificity, it is pretty broad.

So we will be hearing more about that, and we will be hearing more from the staff. So right now I will turn it over to the staff to begin their presentation of Reg. Guide 1.211.

MR. AGGARWAL: Mr. Chairman, and the members of the Committee, good afternoon. As pointed out to you, the staff is here to make a

presentation to you on Reg. Guide 1.211, with the expectation the Committee will agree with the position taken by the staff and look forward to receiving a letter.

Let me point for a moment -- recap a little background about this reg guide. As you aware, the IEEE Standard 383, first time was issued in 1974, and for 30 years actually nothing was done. IEEE worked on this previously. They issued a standard in 2003, which in my opinion, in the staff's opinion, is a much-improved standard, and it actually meets the NRC requirement.

As you know, often these standards being a process of society, they want to write the best standard. Sometimes it happens that we may take an exception if we feel that the information given in a given standard is not enough. This is how we took the exceptions in this particular standard, which I will talk to you very briefly.

Ultimately, DG-1132 was issued for public comment in June 2007, and at that time we

have taken 10 exceptions to the IEEE standard. We received five comment letters from five different organizations. And, as you know, we met with you on September 4th and made a presentation.

Now, I would also like to point out again that this is Standard 383. To improve the standard, the whole thing is based on testing of non-prototype cable. As you know, in a given week at a powerplant you use thousands and millions of feet of cable, and often a manufacturer will qualify a given cable based on the standard. And then, many times they will allow -- they use the same analogy to qualify by analysis cables of different kinds.

The bottom line is there is only one prototype for a given cable, and that is all this standard is limited to. Okay?

Next one.

Now I would like to address some of the questions which were raised at the meeting in September with the ACRS. The first question was raised that -- provide the definition of "risk-

significant, safety-related cable." The Committee found that there was no precise information available, and the staff agreed. We went and looked in a number of regulations. The term is not really very precisely defined.

Therefore, the staff decided to remove those terms and said, okay, let them use the term which is commonly understood for years, and we ran -- okay, let's go back to the maintenance rule. So what we are saying, only those safety-related cable, cables -- safety-related cable, not non-safety-related cable, only the safety-related cable which falls under the maintenance rule should be the scope of the guide.

Again, the licensees expect you will -- is supposed to know where the hottest spots are in these plants, and he can only know that by knowing the monitoring of radiation and the temperature. Once they know, so they can focus on those safety-related cables, which are in those hottest parts.

Based on that --

MEMBER APOSTOLAKIS: Do you mean the safety-related -- all the cables that are part of the safety-related system are themselves safety-related? Is that what these safety-related cables are?

MR. AGGARWAL: After they had determined -- defined that in 50.49, and essentially it tells you that, again, what I am saying it is in the maintenance rule, have safety-related cables plus non-safety-related cables. This guide is going to address only safety-related cable.

MEMBER APOSTOLAKIS: The maintenance rule actually identifies safety-related cables? That's -- I don't --

MR. KOSHY: Safety-related is those systems that are relied on for accident mitigation and the whole definition of --

MEMBER APOSTOLAKIS: I understand that.

MR. KOSHY: But the maintenance rule has safety-related and more in it. But what we are saying is the subset of the maintenance rule cable,

which are also classified as safety-related, are within the scope of this reg guide.

MEMBER SHACK: So you really do mean "and." You want safety-related and covered by the maintenance rule.

MEMBER APOSTOLAKIS: Yes.

MEMBER MAYNARD: So this is really very close to the same scope that you had before. Before you called it risk-significant safety-related. Now you are saying the maintenance rule that are safety-related.

CHAIRMAN BONACA: And it is important.

MEMBER STETKAR: Just to make sure I understand, things that come up in license renewal are underground cables that provide a station blackout recovery function, which are typically non-safety-related cables. Those would not be covered by this, is that correct?

MR. AGGARWAL: That is correct.

MEMBER STETKAR: Okay.

MEMBER BROWN: Say that again.

MEMBER MAYNARD: Please.

MEMBER STETKAR: You want me to say that again?

MEMBER BROWN: Exactly.

MEMBER STETKAR: Well, I don't know if I can say it exactly, but in license renewal applications there have been questions regarding the monitoring of cables that are non-safety-related cables, but that are in scope for license renewal because they provide the function of station blackout recovery. In many cases, those cables are routed underground, and we have had those problems in manholes.

Those particular types of cables in those functions would not be covered by this regulatory guide.

MR. KOSHY: We cannot say all of it, but some of it may fall into this category, because that --

MEMBER STETKAR: If they are not safety-related cables.

MR. KOSHY: If they are not safety-related and not in maintenance rule, then it --

MEMBER STETKAR: No. Be careful, because if they are not safety-related as I -- that is why I am trying to understand the logic of this. If they are not safety-related --

MR. KOSHY: It is out.

MEMBER STETKAR: -- it is out. Even though the maintenance rule would call them risk-significant.

MR. KOSHY: Yes.

MEMBER APOSTOLAKIS: So it may be limited.

MR. AGGARWAL: So based on what we just discussed, the position was changed as you see in yellow highlighted, the words were added. The condition monitoring of safety-related cable may be related to this -- covered by --

MEMBER SHACK: Why do you leave out the risk-significant cables that aren't safety-related?

MR. AGGARWAL: If you will recall, we

had a lot of discussion last time in September, and the issue basically was that -- how do you define "risk-significant"?

MEMBER MAYNARD: There is a concern of mixing the two, because typically risk-significant isn't just limited to the safety-related part.

MEMBER RAY: Yes, but he is right. There isn't a definition.

MEMBER MAYNARD: Right.

MEMBER BLEY: But 50.69 sets up the alternative policy to use that definition.

MEMBER RAY: It does. That is right, Dennis. But the problem is that stuff that is not safety-related but is within the scope of the maintenance rule is what you are --

MEMBER SHACK: 50.69 is a voluntary rule.

MEMBER RAY: That is where I was gong.

MEMBER SHACK: But the maintenance rule is somewhat similar in scope to 50.69, and is certainly part of the regulations that everybody --

you know, so it -- that certainly seems to me to give you a way to define "risk-significant."

MEMBER RAY: But it can't impose requirements for equipment qualification on stuff that is not safety-related merely because it is inside the maintenance rule. I mean, you know, you are talking about a huge issue here that -- you know, where the industry thinks it is well established. The maintenance rule imposes requirements on non-safety-related stuff, but the requirements are limited.

What the yellow ones to me do is they say something that is safety-related but not covered by the maintenance rule is excluded. And I was going to ask: well, what is that?

Well, wait a minute, what I said was simple.

MEMBER SHACK: No, no, I understand what you said.

MEMBER RAY: Okay. And I am just saying, well, why would you have something that is

safety-related and not covered by the maintenance rule that you don't want to include within this reg guide? Because that is what the words said to me when I read them.

MEMBER CORRADINI: So you are asking, is that the null set, or is there actually something out there?

MEMBER RAY: Yes.

MEMBER MAYNARD: Let's let him -- one conversation here at a time. Do you have -- you asked a question.

MEMBER RAY: Well, I did ask a question. I made a statement, but there is a question implied. The statement is, the words to me said, if you've got something safety-related not covered by the maintenance rule, then the reg guide doesn't apply to that step. The implicit question is: is that correct? Is that what you intended? Because that is not what I heard him say.

What I heard him say was this covers everything that is in the maintenance rule that is

safety-related.

MEMBER ARMIJO: Right. That is what I heard.

MEMBER RAY: Well, that is only the other side of the coin, Sam. I mean, if it covers -- if it is safety-related within the maintenance rule, then it doesn't cover stuff that is safety-related not within the maintenance rule.

MEMBER MAYNARD: As I interpreted what you have written and what you have said is that we are dealing with a subset of safety-related. It is not all the safety-related. It is only the safety-related that are within the maintenance rule.

MEMBER RAY: Correct. And I would just ask the question, then, what is not in the maintenance rule that is safety-related?

MR. KOSHY: Let me give you a quick example. For example, the feedwater system is falling within the maintenance rule, but it is not considered safety-related.

MEMBER RAY: What is safety-related and

not within the maintenance rule? That is the question.

MR. KOSHY: Feedwater system.

MEMBER RAY: It is safety-related?

MR. KOSHY: No. Feedwater system is non-safety-related but within maintenance rule.

MEMBER RAY: My question is: what is safety-related but not within the maintenance rule?

MR. AGGARWAL: Nothing.

MEMBER RAY: Nothing. And that is what this is saying to me is, if it's safety-related and not in the maintenance rule, then it is not covered. That is what the words say. You are telling me what you intended was if it is within the maintenance rule in safety-related it is covered. Why don't you just say if it's safety-related and in there.

MR. AGGARWAL: That's what I --

MEMBER RAY: I mean, that eliminates the confusion that we are all having here.

MR. RICHARDS: This is Stu Richards with

Research. I think -- Mr. Ray, how are you?

MEMBER RAY: I'm fine.

(Laughter.)

MR. RICHARDS: I think the idea here was to go look for a widely used definition, and we looked at the maintenance rule and said, okay, here is a whole scheme of things that is already laid out in the regulations that has been widely addressed by the industry, so the industry will know what is covered by this definition. And I think the challenge was, what does "safety-significant" and "safety-related" mean? That was what we had before.

Now we've gone to a definition that the industry I think is comfortable with, and we have excluded the non-safety items that are addressed by the maintenance rule. So, to answer your question, you know, we went looking for a good definition that was pre-existing. We didn't really take it that next step to figure out, well, you know, what is excluded by this.

MEMBER RAY: I am not asking you to do

that. I was only trying to establish that -- didn't you end up with just the safety-related stuff? What does reference to the maintenance rule add to --

MR. RICHARDS: It points to a pre-existing program for which there is a long history of what is in it and what is not.

MEMBER BLEY: Safety-related is even older than that.

MEMBER RAY: Okay. I give up. To me, you are talking about what is safety-related, and that is the set that you are referring to. The maintenance rule has us all confused, but it doesn't seem to add anything. But with that I will just quit repeating myself.

MEMBER BROWN: No. You shouldn't quit repeating yourself, because --

MEMBER MAYNARD: Is it your opinion or position that still all the safety-related cables are covered by this condition monitoring?

MR. AGGARWAL: Correct.

MEMBER ARMIJO: That is your intention.

MEMBER MAYNARD: So I think what they saying is this applies to safety-related cables.

MEMBER BROWN: I do, too. But I am --

MEMBER MAYNARD: So I think we are struggling with why do we even bring in the maintenance rule aspect. Why don't we just say "safety-related cable"?

MEMBER BLEY: I guess I'm -- I just went back and looked at 50.65, and it says safety-related SSCs, and then it qualifies which ones. So I don't know of any, but maybe there are some that don't meet those qualifications.

MEMBER RAY: No, that's right. I am not an expert in plant design, so --

MEMBER SHACK: I mean, certainly we know if you look at 50.69 there are safety-related components that are not risk-significant. Whether they are cables or not I -- you know, I would suspect that varies from plant to plant. I don't know. So I think this, in fact, could limit the set somewhat.

MEMBER RAY: In principle.

MEMBER SHACK: In principle, it could.

MEMBER RAY: Yes.

MEMBER SHACK: But if their intent is to cover all safety-related cables, then --

MR. KOSHY: Yes. The very title is qualification of safety-related cable, how to qualify if it is doing a safety-related function.

MEMBER RAY: But I am with everybody else, why bring in the maintenance rule if that's what you want?

MR. AGGARWAL: I will concede if the committee recommends to drop that into maintenance rule, we will do so, and simply say "safety-related cables."

MEMBER RAY: That is what you mean. It would be okay to exclude some safety-related stuff that is not covered by the maintenance rule probably. And if that is what you meant, then fine, that is what --

MEMBER BLEY: And the maintenance rule

does give a qualification. I don't know what is in the qualification. I mean, I know what --

MEMBER MAYNARD: Well, why don't we -- this is an area we may want to come back to later. Let's go ahead and move on. And after we get through the rest of it, we will see if we want to come back and talk a little bit more about this. So let's go ahead and move on.

MEMBER BROWN: Well, the only question I thought -- there is still disagreement somewhere on whether you should even have condition monitoring at all, isn't there? If you read some of the other paper, there is --

MEMBER BLEY: Yes.

MEMBER BROWN: Okay. We will get to that later?

MEMBER BLEY: The disagreement is not at the staff level. It is --

MEMBER BROWN: I understand. I understand that, and I -- I've got some other questions I wanted to address on that. Go ahead.

MR. AGGARWAL: One of the other questions which was raised by ACRS was again on this code, and we just discussed we really meant safety-related cables, and this is wrong.

Next?

One of the questions that was raised, again in the September meeting, are the cables covered under Appendix R? Are they within the scope of this guide? And the answer is no. The requirements for Appendix R are somewhat different as compared to this requirement for qualification of cables for low power environment, to a different issue. And for reference we have pointed out here that -- there the requirements for Appendix R are included.

The bottom line is for purposes of this reg guide requirement for Appendix R not covered by this reg guide.

MEMBER BROWN: But this reg guide is just not -- "condition monitoring" means go off and monitor this, the environment in which these cables

are, for the life of their application. So this is more than just qualification of cables. This is actual plant requirements on the licensees over the 40-year or 60-year life of the application.

So it is more than just qualification, so I would just take an issue with the point -- the difference between fire -- that fire doesn't cover qualification. Well, this also has non-qualification attributes in it also. That is -- I was quibbling a little bit, but it is clarifying.

MR. KOSHY: The IEEE Standard 323, even the recent version, includes monitoring the qualification as part of the qualification process. That is how the industry has addressed that issue, in the sense --

MEMBER BROWN: For fire.

MR. KOSHY: No, for qualification. IEEE 323, 2003 version, which we are going to endorse, and we have endorsed the previous version already. That is -- considers maintaining qualification as part of the qualification process itself. And,

therefore, monitoring falls into the same qualification standard.

MEMBER BROWN: To ensure you don't exceed the qualification environment.

MR. KOSHY: The assumptions -- you are within the assumptions, and that is what the industry chose to go with. And chances are when we endorse it we will be considering the endorsement in the full scope of the standard itself.

MEMBER BROWN: That is in 323?

MR. KOSHY: Yes.

MR. AGGARWAL: That is the model standard.

MR. KOSHY: That is a model document for all standards. And this is -- you can -- this standard you can see it as a daughter standard, focusing just on cables. 323 addresses the qualifications at large for all -- all components.

MEMBER MAYNARD: And I do think that is important to note. This isn't the only requirement dealing with condition monitoring and with equipment

qualification. This is specific to the cables. It does fall under other standards, and there are other requirements.

Okay. Let's move on.

MR. AGGARWAL: Okay. The next concern the Committee has, they wanted us to justify the need for protecting specialty cable with connectors for tri-axial and bi-axial. That position has been removed from the reg guide.

MEMBER ARMIJO: Why did you remove it? All we needed -- we asked for a justification. We may have agreed with you, but we --

MR. AGGARWAL: We conceded the standard adequately covers, so we didn't have to take an exception.

MR. KOSHY: But what you will also see is that in the discussion part we have shared the thought that in some specialty cables, some must be tested with this respective connector. It may not work very well, in the sense if you separately qualify the connector and the specialty cable

separately, when you put it together you find that functionally it may fail.

So that thought is shared in the discussion part, but we did not go to the extent of saying that in every case you shall test it like that. So that is where we backed out and said, okay, we have shared that concern, and now the industry knows it. And the standard also talks about the same discussion, so that should be adequate, rather than addressing another exception.

MEMBER ARMIJO: Was that issue of the cables and the connectors addressed? Is it addressed in some other regulation, in some other --

MR. KOSHY: No, it is not.

MEMBER ARMIJO: So, if it is a real problem, why isn't it?

MR. KOSHY: Okay. It is a real problem, but it may not be widespread, in the sense what we know of is certain connectors and certain cables, when separately qualified and put it together, it didn't work right. But that is not a generality, in

the sense all cases are not like that. So we shared that thought in the discussion part, and we left it rather than going for a specific example.

MEMBER ARMIJO: And you said that point is also raised in the standard.

MR. KOSHY: That point is discussed, and it's in the standard also, yes.

MEMBER BLEY: But it is not a requirement to test it.

MEMBER ARMIJO: Well, maybe we will ask the industry guys whether they believe it is significant or not.

MR. KOSHY: And, you know, as we progress in testing, if we come across cases, we had -- the other method would be to issue an information notice stating, okay, in this particular application we find this to be available, and let the industry know about it.

MR. AGGARWAL: So, finally, the issue was raised with regard to that the staff has not specified or offered any specific condition

monitoring techniques. And the requirement of condition monitoring is imposed without any condition monitoring techniques.

Let me now address that issue. My position is that the staff continues to believe that condition monitoring is required and must be implemented. And the reason is that that is -- as was stated previously, all we do is do one prototype testing, and that test, whether it is in Plant A or Plant B or C, that test is used not only in U.S.A. but all over the world, to focus attention that one prototype, one cable, is tested, and you come back that, hey, I don't want to do anything for 40 years. The staff thinking is not acceptable.

And this is also based on our operating experience, particularly includes the power cable. Therefore, the staff is saying that there are probably 14 techniques available for condition monitoring now. We are not in a position at this time to tell you that Technique A, B, or C, you are leaving to licensee that you can put any technique

which may fit to the type of the cables you have or the environment you are exposed to, and take a lot of factors.

The bottom line is that we require that you do something other than test the cable, and the cable is good for 40 years, 60 years, and some plants are now thinking to go 80 years. So you need to know in your plan really how these are. You should know the temperature, you should know the radiation, and, once you know, then you should have simple walkdowns, or use any appropriate techniques.

I may also point out that the staff and the international community at this time is working to focus on different matters of condition monitoring. And we may be back before this Committee some time in the near future when we may specify that this kind of technique for this particular type of cable is appropriate. For the time being, the staff is submitting that, hey, we would like something to be done, and it is up to the licensee to pick any technique. They can pick what

they think is best justified.

With that, I conclude.

MEMBER RAY: This is a reg guide. How does it get implemented in the way that you have just now been talking about it?

MR. AGGARWAL: Very good question. You are 100 percent. Reg guides are advisory. And not only that, it is voluntary. If you are in an operating plant, you don't have to use this at all.

MEMBER RAY: If you are what?

MR. KOSHY: If it is an operating plant.

MEMBER RAY: Oh, okay.

MR. KOSHY: It is voluntary. But for new licensees, they need to address all of the reg guides.

MR. AGGARWAL: They are expected to attend.

MEMBER RAY: Understood.

MR. AGGARWAL: So all I am saying, this is the staff intention which we are expressing in black and white that is -- that some kind of

condition monitoring will be done.

MEMBER RAY: Okay. So this isn't going to have a big impact on the existing operating plants, except those who voluntarily follow the guidance.

MR. AGGARWAL: Correct. They don't have to do anything at all.

MEMBER RAY: Okay. No, I understand.

MEMBER MAYNARD: Well, the existing -- they don't have to do anything relative to this. They have to meet whatever their current commitments are.

MEMBER RAY: Yes. They --

MR. AGGARWAL: However, I must caution you that a nuclear powerplant -- suppose they decide to change the system in entirety on their own, okay? Not that NRC is asking, but they decided to change their whole RPS system, for example, then they must comply with this reg guide, because this is a change in the system.

MEMBER RAY: Well, okay.

MEMBER MAYNARD: You said that later you may have -- well, one of the questions relative to this, and I think we will be hearing more from NUGEQ on this, is the broadness of this without much specifics on exactly what to be done. And that is a two-edged sword.

You mentioned that you may come back later with more specifics as to what types of monitoring are appropriate in what cases. Would that be like a revision to the reg guide or --

MR. AGGARWAL: It could be.

MEMBER MAYNARD: -- how would that be done?

MR. AGGARWAL: It could be test revision on a new reg guide.

MR. KOSHY: There are two things in the works. One is our research is working with one of our national labs to look at the essential elements of the cable test program. That is actually possibly -- the draft reg guide should be coming out by the end of the year. They have just finished

their initial work. We saw some initial reports, so that is coming, to essentially explain the essential elements of a test program.

The second part which Satish referring to is the -- these techniques are gradually getting refined. We know of one technique developed in the Haldon project which is -- looks very promising. It has been tested in about four nuclear stations overseas, three of the Swedish plants, and I forgot the other name. And they find that to be one test that is suitable for all types of cable. That is the first one of its kind.

And so far all of their tests have been very successful, and it is able to measure the insulation all the way to the full run of the cable. And within their country EPRI also has experimented with the same technique, and their report is that it looks very promising.

So what I am hoping is in the near future we should be able to -- if this test is one -- one for all, it will be a great success. If not,

we may have to look at a couple more and present a reg guide explaining why this is the most suitable way to go.

In the meantime, there are three IEEE standards which essentially talk about all of the best techniques that are in the market now, and giving level of clarification as to which technique is best suited for which type of cable. So there are three IEEE standards in the works already.

We are holding off an endorsement because of the -- see this industry work that is progressing, and we hopefully looking at this one technique that may be applicable to all types of cables.

MEMBER BROWN: Okay. I want to -- a little more calibration and then a question. Condition monitoring -- there is two things called out in this, environmental condition monitoring whereas -- and I presume -- and then condition monitoring. These are -- so you've got two -- there's two aspects to this.

So as far as the environmental, I am just trying to understand it. Wherever the cables run, if they are in a space, you should have cognizance monitoring of that space -- its temperature, radiation, whatever the appropriate parameters are -- so that you know now the environment in which whatever cables are in there are enduring, and you an evaluate that relative to their qualification status.

Second is what I would -- condition monitoring. That is tests of the cable, like megger tests, hi-pots, time domain reflectometer test, you know, impedance measurement, whatever the heck they are for co-ax, etcetera. And I am just reflecting back on some experience.

The last thing I ever wanted to do was take cables apart. Every time I took cables apart and put them back together I ended up with loose connections somewhere. Okay? So I've got kind of a very jaded thought process. If you have to do it every now and again, what type of periodicity are

you talking about relative to making these -- and there is a second piece of this -- this condition monitoring, are you talking about every year, every 10 years, every shutdown for refueling? Is there something in your mind relative to that?

Second question related to this is, most of the cables that are safety-related are actually energized in performing their function. For example, neutron detectors, pressure detectors, temperature detectors. And you are reading those all the time. Motors are running, all kinds of stuff like that. So you know that they are working.

Now, lights, you know, cables that go off to something that is intermittently on, you don't know what their status is at any time, unless the light is on all the time, which is a different circumstance. So do you -- there is no differentiation in here in terms of cables which are continuously energized with a visual evidence of their application in work? Or is it just cables -- there is nothing in here, okay, that just cables

that are not in a state where you can know what their operational mode is?

MEMBER RAY: That is a harsh environment qualification.

MEMBER BROWN: Well, I mean, go through -- you know, the harsh environment is where you have a -- I mean, cables are in radiation environments, and I just didn't -- co-ax cables, and I didn't go take them apart, just --

MR. KOSHY: We are trying to gain assurance that these cables can in fact withstand a LOCA environment to the accident, so that we are confident of the information that comes into the control room and the actions that we need to take.

So the fact that it is functioning now is not an assurance that it can survive a LOCA environment. And the next part about the environment that -- the question that you addressed, too -- during the qualification process, we make some assumptions on what is the probable environment in its operating life -- for example, a certain

level of radiation and certain level of temperature condition.

And in the test process we tried to integrate it and accelerate its aging, bringing it to its end of life and then expose it to an accident radiation. That is --

MEMBER BROWN: I saw that. Yes, I got that part.

MR. KOSHY: Okay. Now, so the fact that it is functioning now gives me assurance that under fair conditions it is functional. But if I am to have an accident, and parts of the cable is exposed to this extreme environment, would it still do it with the same level of, you know, conductivity and lack of leakage current through that accident? Because that affects my setpoints and the preciseness of the signal that I am expecting.

Now, some more details on the environmental side, you are going back to the environment to reconfirm that the cable that you have qualified is still within the original design

assumptions. Speaking from operating experience, these days we come across a problem only if it fails. For example, in some thermal lagging on a steam pipe, it was removed to enter into the update early and so some of the fire work. That heat dissipation was so much on the cable, the MO, it stopped functioning.

Then, we noticed -- looked into it earlier and found out that insulation had completely hardened, and it was breaking. So what we noticed in the normal operating experience is only when things are crossed far beyond to the extent they are failing, or we catch it in the next surveillance.

So in looking into the safety significance, what we are hoping is this program will give us reasonable assurance that this cable can function through the accident environment and serve its safety function. That is why we are going this far to say that you need to do additional testing to make sure that the insulation is remaining intact to serve its function.

MR. AGGARWAL: Let me also add that it is not the staff's intention that licensees remove all the cable, dismantle, only doing for condition monitoring. We are expecting them to use their judgment, and pick some selective cables, and the given technique that is useful for the plant.

We totally agree with you that dismantling cable, connecting them back, will create more problems. But they are techniques available now while the cables are energized and operational you can use relative to the techniques.

MR. KOSHY: And you had one more question regarding the frequency. We stated in the reg guide that condition monitoring and its frequency may be adjusted based on the cable performance. For example, if I am buying a cable now, the cable chemistry is so good, if I took a baseline data, in about probably five to seven years I don't have to look at it at all. I take annual reading at, let's say, five years or seven years. I will find that the rate of degradation is very low.

I will endure only for the next 10 years.

So, in a sense, you can adjust your frequency based on what you read from this test program. But if you see a serious degradation, we expect the frequency to become closer, by the same token.

MEMBER BROWN: Well, the techniques I have experienced that have had wide -- that have wide variability in application. So that your data trending is hard.

MR. KOSHY: Well, we are hoping they will dwell on the same techniques, so that you can --

MEMBER BROWN: Are you using the same technique, whether it's a megger test or whether it's a time domain reflectometer, to make sure you've got continual continuity, the level of continuity you want on certain types of co-ax cables, things of that nature? Those are -- you don't get the nice, you know 1.0 times $10^6$ every time. They bounce around, so --

MR. KOSHY: We can limit some reasonable radiation, so long as, you know, your outages kind of reflect the same way on cables of comparable, let's say, average and also application. If it is exhibiting certain level of difference, you can eliminate some of those questions.

But, you know, if you see a gross difference, that is an early indication that insulation is seriously degraded. And we want licensees to be prepared to attend to it, rather than finding out later that this is not working.

MEMBER BROWN: Are megger tests on your list?

MR. KOSHY: We were not going to supply a list in --

MEMBER BROWN: No. Is that one of the 14 techniques?

MR. KOSHY: If it -- yes, it is one of them, and they cannot use that -- the lowest one of, you know, unrolled megger for doing that testing.

MEMBER BROWN: Well, I am just saying,

take a 5,000-volt megger on a 5 kV system, whatever it is, and you will find -- depending on all types of conditions, you will get numbers from one meg-ohm to 100 meg-ohms or 100 gig-ohms over a five-year period. And I don't know what you are going to do with this.

MR. RUSSELL: This is George Russell, NRR. I have -- Tom Koshy in Research is writing, as he stated earlier, the effective characteristics of a cable monitoring program. We don't want just one test. You are going to have to evaluate what type of cables do you have in your plant, and do a series or a combination of tests.

To answer your other question, there is methods out right now that provide a pretty good trending, such as partial discharge and tan delta, but they are using them for power cables and they are doing correlation curves and deciding when to replace the cables.

So with your one method, yes, your megger won't give you that, but the tan delta method

will give that, so -- for certain types of cables. So there already is methods out there that I can trend and make a choice through a correlation curve when I am going to replace the cable. So there is methods right now that the utilities are utilizing, and several of them in the southeast part of the United States have -- they are trying to perfect the tan delta, and there are several companies going after partial discharge.

I understand with your megger, but we are not talking about just doing a megger, we would like to see a correlation of tests based on the cables that you have. And then, you can get your trend.

MEMBER MAYNARD: The way I read the reg guide, at this point you are not specifying a frequency or a test. You basically do something. And as long as it is even close to reasonable at this point you would be accepting that. But at some time in the future you may be coming out with another reg guide or whatever to get some --

MR. KOSHY: And we will build confidence on certain techniques that we can say, okay, this is the way to go.

MEMBER MAYNARD: So you are not saying that people have to disassemble cables or whatever. They can take a look on a case-by-case basis and what they --

MR. AGGARWAL: Exactly.

MR. KOSHY: Some of these techniques -- you know, like if you have a break in one and the opening on one side of the cable is sufficient for running the test. And especially the one technique that I was referring to -- is referred to as LIRA, Line Impedance Resonance Assessment.

They are also experimenting on doing that on live wire in the sense not at all disconnecting, but just attaching two patches to the end and running the signal.

MR. AGGARWAL: And the cables are energized.

MR. KOSHY: While the cables remain

energized, yes.

MEMBER MAYNARD: And at this point, you are not really -- although some of the plants and some of the utilities may be doing some research and developing new plants, you are not really asking anyone to go beyond the current state of knowledge or capability.

MR. AGGARWAL: Correct. Yes.

MEMBER MAYNARD: I think we will hear some more from NUGEQ on this.

MEMBER BROWN: Yes, I just -- I wanted to get my thoughts out there. That's all.

MEMBER MAYNARD: Okay.

MR. AGGARWAL: Thank you.

MEMBER MAYNARD: All right. Did you have any more? I think that is your last slide, right?

MR. AGGARWAL: Yes.

MEMBER MAYNARD: I guess I would like -- before you leave, I would like to go back -- we talked a little bit on scope earlier. Is everybody

clear on the scope that they are proposing?

CHAIRMAN BONACA: Yes.

MEMBER MAYNARD: And does anybody have any more questions on that scope?

(No response.)

Okay. With that, thank you very much.

MEMBER BROWN: Good morning.

MEMBER MAYNARD: Oh no, we are not done yet.

I believe we have an individual here from NUGEQ.

MR. HORIN: I am here.

MEMBER MAYNARD: All right. All right. Come to a microphone anyway there. Introduce yourself. Why don't you come on up here, yes.

MR. HORIN: Good afternoon, Mr. Chairman, and the rest of the Committee. We come before you again.

Thank you very much for allowing us to take some time to discuss this guide and the direction that we are going in some of these areas.

I think that the progress that has been made over the last couple of years in looking at this guide is important. But we still have a couple of issues that we think are very important that we have not fully resolved.

My name is Bill Horin. I am with Winston & Strawn. We are the counsel to the Nuclear Utility Group on Equipment Qualification.

Phil Holzman, who is our Technical Consultant with Strategic Technology and Resources, is listening in on the phone. We have been in existence since 1981, and the sole purpose of this group is to examine issues related to equipment qualification and primarily the environmental qualification of electric equipment.

We represent over 95 of the operating reactors in the United States, and we have been following this issue for many years and continue to follow it. It is an important one.

Let me say first that we do not object to condition monitoring. I heard that mentioned on

a couple of occasions. We believe that it must be clearly laid out that proven and effective means of condition monitoring are the ones that we must focus on.

There is a lot of discussion about, you know, 14 methods, but the applicability of any one of those to a broad set of cables that would result in -- provide results and provide any information that is useful for determining the survivability of that cable in a harsh environment is very limited.

The slides that we I guess -- next slide. Or do I do this? Okay. Thank you, Tom. One moment.

Okay. What I wanted to start with here, because I think it is an important factor, and there were only -- there is only a handful of the Committee members that were here in 2002 when this issue came before you -- is to provide a bit of background related to the substantial research effort that the staff undertook in the 1992 to 2003 timeframe to address qualification, the adequacy of

our qualification standards, to address also specifically the availability of reasonable condition monitoring techniques.

We said at the very beginning -- and this was a comment with NUMARC, and we worked closely with them, is that we believe research in the area of condition monitoring may be useful toward developing information for assessing the actual service life of equipment. We didn't object to doing research on condition monitoring, and we don't object again, as I pointed out, more effective and proven methods of condition monitoring to be considered for facilities.

MEMBER ARMIJO: Let me ask you, do you consider it -- you know, maybe useful isn't a real big endorsement. Do you think it is important and a high priority to do condition monitoring?

MR. HORIN: If we get useful information.

MEMBER ARMIJO: Sure, I agree, you know, that is a prerequisite. But do you really think --

so you -- you are not against it, but you are against it if it is -- provides garbage --

MR. HORIN: The way this guide is written presents a very broad and undefined expectation with respect to the application of cable condition monitoring. And perhaps we should back up just for a second. We are distinguishing here between cable monitoring, environmental monitoring, walkdowns, corrective action programs, which licensees do already and which future licensees will do.

The issue that we are focusing on here is supplementing those efforts with actual cable condition monitoring techniques. And so if we, again, have, you know, proven and effective means, it would be -- to provide the information that we need, you know, it would be an appropriate thing to expect.

But we don't have that at this point in time, and the reg guide is written in a way that would expose licensees who either adopt this at new

plants, or who are, as Mr. Aggarwal pointed out, conducting a major change to their facility where you are fundamentally changing the licensing basis, and, therefore, you may be expected to utilize the newest guidance available, under those circumstances we don't believe that this is adequately defined.

In the 1992 to 2003 timeframe, the NRC undertook a substantial research effort, which was to address the question in the Generic Safety Issue 168 and to address several components related to the environmental qualification standards. Now, one of those components was the adequacy of the existing standards, the adequacy of the application of testing techniques.

We have heard today that we do a single prototype, and then licensees go off and change, manufacturers go off and change the configuration. Well, that is not 100 percent clear or accurate, because when you do a prototype of a particular type of cable you are required to evaluate and maintain that that qualification applies to cable which is

similar design and function and materials, and you have to do a detailed analysis of that.

And the generic safety issue resolution and the task action plans, a result of the task action plan efforts, concluded that that type of testing was adequate, and that it was appropriate given the standards and conditional measures of conservatism we have in our regulatory system.

But most importantly, with respect to this particular issue that we are dealing with right now, and that is -- and I am focusing first on the condition monitoring question -- we identified as part of that task action plan 12 techniques I believe it was, and we have tacked on a couple of others that are out there now, that have -- at least in laboratory applications are in limited applications, potential benefit, or have the possibility of providing some information with respect to the condition of the cable.

But whether any one of these is appropriate for any particular type of cable in situ

that will provide information that tells you, which is what we are most concerned about, how this will perform in the event of an accident as opposed to some particular, you know, gross failure of the -- you know, of the insulation or some part of the cable construction -- is -- was the focus of this task action plan, a review of condition monitoring. And we -- the staff spent taxpayer's dollars, millions of dollars on this effort.

Let's see. So in October of 2000, this testing was completed, and the staff briefed the ACRS. There were still a number of questions related to the characterization of the results of the testing that were performed under the GSI, and so some additional meetings and interactions were -- took place over the next couple of years to focus on in particular, you know, the need for monitoring plant environments and cable condition monitoring.

In June of 2002, the staff came before this Committee and described what the results were of that process. What the staff demonstrated or

stated -- and we provide specific citations to the ACRS transcripts on our web -- that with respect to the methods that no single technique was effective, and a combination of techniques would be needed to provide useful information, and that overall -- and this goes to the question of terminating, determinating, and whether or not there is a higher risk component with respect to equipment performance versus cable performance, but the benefits of conducting condition monitoring were modest at best.

And, fundamentally, that was done by a risk analysis that the NRC had conducted that examined the question of, you know, we are going to establish the specific -- assume failure probability for cable. And even if we are able to reduce that down to zero, okay, the change in the risk related to, you know, cable failures was going to be -- that could be prevented by condition monitoring, even if condition monitoring could take the risk to zero, there was not a significant change in the risk involved.

MEMBER STETKAR: Can I ask a question about that? I am not familiar with that study, although I have some background in risk assessment and electrical things. So I -- I am kind of curious. You are characterizing the study. Are you familiar with that study and how it was done?

MR. HORIN: Yes. Bill is our technical consultant for it.

MEMBER STETKAR: Okay. He is on the line.

MR. HORIN: He is listening.

MEMBER STETKAR: Okay.

MEMBER MAYNARD: We can open it up if you need him to answer a question. We'll see how --

MEMBER STETKAR: My experience has been that: a) cables are not modeled in any risk assessment, so determining the net changes of failure rate of something that is not there is --

MEMBER APOSTOLAKIS: Problematic.

MEMBER STETKAR: -- problematic. Thank you, George.

(Laughter.)

And, second of all, that if -- I have seen risk assessments that have included cables, but the presumption is those cables are under good condition. In other words, the presumption is that they are not degraded, and that sufficient monitoring has been done to ensure that they are in condition as -- essentially the same condition that they were installed when the plant was built.

So that is why I am curious about the conclusion that making the cables perfect doesn't change things.

MR. HORIN: There was a failure rate model, then, for the cable. And I believe it was one percent.

MEMBER STETKAR: I am not sure what a one percent failure rate means, but that's okay.

MEMBER BLEY: You are saying somebody took a PRA of a whole powerplant, modeled all of the cables, and put in a one percent --

MR. HORIN: All of the cabling with a --

an assumed --

MEMBER BLEY: Something is real suspect about that.

MEMBER STETKAR: I have never heard of anyone ever doing that, so that is curious.

MEMBER APOSTOLAKIS: That is something that perhaps --

MR. HORIN: Yes, Phil might be able to provide more, so go ahead and open up the line.

MEMBER MAYNARD: Go ahead.

MR. HORIN: Phil, we're going to try and tap you in here.

MR. HOLZMAN: Can you hear me?

MR. HORIN: Okay.

MR. HOLZMAN: Okay. Good afternoon.

MEMBER STETKAR: Good afternoon. Have you been listening?

MR. HOLZMAN: Of course.

MEMBER STETKAR: Are you familiar with the study that was done that concluded that perfect cables has no effect on -- making cables perfect has

no effect on risk?

MR. HOLZMAN: I am reasonably familiar with it. And, in fact, I think we provided an overview of that -- of that study in Enclosure 2 to the letter we provided to the ACRS. But, in summary, I believe that the PRA evaluation took a look at the most risk-significant accident scenarios, particularly those that were scenarios that produced harsh environments in the plant, and then it looked at the specific ones that were the most significant in terms of risk contributions.

And it looked at -- and those scenarios and the equipment necessary to support those scenarios were a substantially smaller subset of the equipment than the whole plant.

And then, Arthur Buslick, who I think was the NRC staffer that did work on this, and his contractors -- I don't know really who actually did the work -- took a look at the available research information that the NRC had conducted on cable performance during accidents and other information.

And based on that, they came to the conclusion that for the purposes of modeling cables in the PRA they would assume a failure rate of .01 for the cables, which I think is a number to start with.

I think those of us who have experience in qualification would have disagreed with that number and thought it was very low. Oh, excuse me, very high in terms of failure rate.

My understanding also is that in the modeling, the PRA modeling they did, they assumed that if there was a cable that failed in one redundant train of a system that the -- that the cable also failed in the other train. So you had a .01 failure rate for actually both cables in both trains.

And they modeled that -- those cables in as supporting the equipment, and then they came up with a CDF for that model. And then, they took the same model and they said, okay, let's take in that model the -- and assume now that the failure -- that the cables don't fail, they have a failure rate of

zero, and see what the change in CDF is.

And then, they went through that process, and I think the conclusions that Bill just expressed to you are stated in their study, which was part of the proposed -- was part of the technical assessment for this GSI, which was that the -- that the -- I think they would have called it the monetized benefit in terms of however this goes on for latent cancer fatalities and everything else -- that given other analyses they had done for other reasons that this was a modest -- that there was a modest benefit.

And there was a recognition that it was modest even assuming that the cable -- that the cables were perfect now, that the condition monitoring took the failure rate from .01 to zero. And I think the study also went on and said if there were -- if there was credit for other licensee activities, such as environmental monitoring, walkdowns, and things like that, the benefit would be even less. And then, obviously, recognizing that

you can't make the cables perfect, the benefit would be even less than that.

And I think in the enclosure that we provided to you that is -- I think on page 2 of that enclosure there is an interaction between Satish Aggarwal, Arthur Buslick, and one of the members of the ACRS. And they in essence all said that the benefits -- it says the benefit -- I will just get down to -- to the ACRS member's statement at the end. "So the benefits of industry actions are, then, even smaller than modest, because you are getting all the way to zero." And the ACRS said, "That's right."

And I think even Satish said at that time, when he was making the presentation, said that, "And we find that any requirements such as condition monitoring, the benefits are zero to modest." And so we are confused. I will let you get back to the discussion. But, I mean, frankly, we are confused because, as you saw today, there has never been a mention of GSI-168 or the significant

efforts that the staff had in that area.

And it seems like the conclusions -- they are bringing up the same questions and the same perspectives they had before the GSI was even started. I mean, I can remember back in '93 we were hearing the same thing, that condition monitoring is necessary. And they set about in the GSI-168 program in essence to prove it, so that they could make it a regulatory requirement.

MEMBER MAYNARD: Okay. John, did you get --

MEMBER STETKAR: I did. And thanks for your elaboration. As you were speaking, I kind of reread the Enclosure 2. It is my understanding that the study you are citing looked at Surry and Peachbottom and only the contributions from LOCA events, and made some assumptions about how much cables might contribute to LOCA events. And that is really not a risk assessment. It is --

MR. HOLZMAN: I don't believe that they were looking at LOCAs. I think they were looking

at --

MEMBER MAYNARD: I would like to move along. I think we understand their position.

MR. HORIN: Okay. To move on, I think the fundamental point, or actually there is another point to be made on this particular slide -- we have already talked about the conclusions, but also there was an additional contractor report that was issued, and it is NUREG/CR-6704, that was issued at that time, which indicated that you had to look at the condition monitoring methodologies closely because a lot of the information that comes from them were obtained in laboratory settings.

And that the conclusion was that additional testing needed to be performed on the effect in actual plant conditions in situ to truly assess the viability, the efficacy, of these condition monitoring techniques.

So, ultimately, at the conclusion of 10 years of research and effort, the ultimate conclusion was that we were not going to impose

specific expectations with respect to condition monitoring, and that we needn't change the fundamental qualification criteria that we have used with respect to environmental qualification of electric equipment.

To jump ahead, there has been nothing that has been placed before stakeholders -- and I would ask that if there is anything that is in the public document room, give me an ADAMS number. If there is anything that has been fully vented with stakeholders concerning supporting any change to the conclusions of the task action plan, and if they come forward with it, and we will be happy to examine it.

But all we have at this point in time is, well, we have some condition monitoring techniques that are promising. There is one in particular that we think may be good. But the tooth fairy -- you know, thinking what the tooth fairy is going to bring you until that quarter is under your pillow doesn't tell you what is happening.

And we haven't had the opportunity, as we mentioned, that -- to examine any change in the basis for the conclusions that were reached in 2002 and 2003. I think that it is also important to note that EPRI, with respect to the one methodology that Mr. Koshy mentioned, is planning to do in situ examination of that methodology in 2010, but we are not there yet.

I mean, we have some claims of promising results in some plants in Europe, but we don't have anything that tells us, as U.S. regulated and regulatory bodies, that, yes, this is the answer. And yet we are looking to put language into a reg guide that will apply to new plants, can apply under some circumstances to existing plans, that expects condition monitoring with essentially no limitation on that provision.

MEMBER MAYNARD: I am going to have to ask you to move it along a little bit. We do have some other questions for the staff, so --

MR. HORIN: Okay. So we will move it

along here. We have heard the suggestion that doing nothing is what licensees are doing, and that is a mischaracterization. We are doing environmental monitoring. We are doing walkdowns and inspections. Anything that we find we put in corrective action programs and follow through with the root cause analyses.

Those are not nothing, and those have been shown to be effective in identifying situations where you have cables, other equipment in the plant, that may have been stressed in a manner that is, you know, not expected from the original design.

We have already talked about the efficacy of condition monitoring techniques to put it in --

MEMBER RAY: Let me interrupt you for just a second, just very briefly. All those things that are being done now would not satisfy this reg guide in your judgment?

MR. HORIN: No, because they add additional language with respect to cable condition

monitoring, which we distinguish between monitoring, environmental monitoring. And those elements -- and the new language -- we just saw this new language today, because this wasn't released previously. The new language seems to confuse condition monitoring with the type of environmental monitoring that is being conducted.

We would view monitoring, cable monitoring, as involving inspections, walkdowns, environmental monitoring. That would be cable monitoring. Condition monitoring is specific to and would be in addition to those other efforts that are undertaken already. And this reg guide suggests that you should be doing this condition monitoring -- cable condition monitoring in addition to the other methods that you are doing.

MEMBER RAY: And that is not being done now.

MR. HORIN: And it is not being done, because we don't have any proven ways. There are some cables -- I think we mentioned some power

cables. There are some methods that are useful for particular cables. But we are talking about instrumentation and control cables, medium voltage cables, we don't have some method that we can point to that is the silver bullet here.

And all we are asking is that there be some recognition in this language that those techniques, to the extent that condition monitoring remains in the guide, that there be some qualification on that language that suggests that it has to be some proven and effective means of condition monitoring, not just, "Well, do something. We want you to do something. We don't know what that is, but do something."

And if we don't have any criteria or any standard by which to even approach this, we are running into a situation where licensees will be unable to demonstrate that they reasonably satisfied what the expectation is. So that is our fundamental --

MEMBER RAY: Okay. But it would seem --

and I can -- I have been admonished we need to move on here, but it would seem like the guide, were it to exist, would invite licensees to propose what they would intend to do specifically. And it would be whatever was available at the time. And I gather your concern is that that wouldn't be enough.

MR. HORIN: No. The guide is not clear on that point.

MEMBER RAY: So it is a matter of clarity.

MR. HORIN: So it is a matter of clarity. And our suggestion, which we have at the end of our presentation, and we have essentially cut through these -- let's go right to here -- is we use language that says that, where appropriate, these activities should be supplemented with -- "these activities" being conditioned or -- being cable monitoring or environmental monitoring -- should be supplemented with condition monitoring techniques that are proven to be effective for assessing in situ degradation for the cables and conditions of

concern.

And we provide some additional language that we should also be focusing on those that are most at risk. But our question here is, if we are really intending to have licensees that are -- become committed to this reg guide only do those things that really work, then what is wrong with putting that language in?

I mean, we are looking for clarity here, and all we are saying is that, given the uncertainty -- significant uncertainty that exists with respect to the applicability of particular of any of those 14 methods of condition monitoring, and, in particular, the absence of any additional record beyond what was done in the Generic Safety Issue 168 resolution, that it is inappropriate to simply say, "Oh, and we expect you to do condition monitoring."

I would point out that among the people who commented upon this guide, the draft guide originally -- we mentioned there are five different groups -- IEEE itself commented and opposed

inclusion of condition monitoring, because the IEEE standard on which this is premised and on which an exception is being taken doesn't address condition monitoring. So that is somewhere else.

And we recognize that there are going to be additional efforts, that there is an additional reg guide that is going to be evaluated, and we would suggest that this language, if we are going to come out with this reg guide now, would be appropriate in that to the extent that more detailed guidance with respect to condition monitoring and the status of that within the -- you know, our universe of activities we can employ to provide additional assurance of cable condition, is best addressed in the context of these additional efforts that are ongoing and will result in additional guidance -- sometime by the end of the year that we are looking for another reg guide that would focus -- draft reg guide that would focus on condition monitoring.

MR. KOSHY: Essential elements of a test

program.

MR. HORIN: Essential elements. But that type of effort that is focused purely on this issue, which is -- I hope we have gotten across is not clear that we can point to any one of those 14 methods and say, "Use it."

MEMBER MAYNARD: What I see is a key difference between what you are proposing -- you are limiting -- you are saying "where appropriate," whereas they are saying "all within the scope." So you are saying -- and that is one key difference.

The other is to basically only use it when there is a proven method or technique proven to be effective.

MR. HORIN: Right.

MEMBER SHACK: Where do you think it is appropriate?

MR. HORIN: In what respect?

MEMBER SHACK: Well, you say "where appropriate." I want to know what your definition of "appropriate is."

MR. HORIN: We were looking at -- if you look -- on the next line down, or the next sentence, most effective when applied to cables with the least margin due to qualification level, service condition, those cables that are at risk, those cables that we know are right on the border in terms of their, you know, temperature environment, so their radiation environments, to look at those perhaps that have, you know, greater potential risk or significance in the plant, because we know that there are a number of cables that are out there that are subject -- that are safety-related, that are subject to 50.49, and it is only because they just barely exceed a temperature limit that licensees will have in their plants.

MEMBER BLEY: How about cables that are in service in environments for which they weren't qualified?

MR. HORIN: Well, that is something for corrective action. I mean, if they are not qualified, then they need to be qualified. I mean,

that is a separate issue. That is a regulatory compliance issue.

MEMBER MAYNARD: I would like to bring this to a close. I think we are clear on your position here. And unless there are some other burning questions for him, I think Charlie had a couple of questions for the staff on IEEE itself, I believe.

MEMBER BROWN: Yes, these are general. The IEEE standard 383-2003 is relatively general in a couple of places, and so a little bit of this is to make sure I understand how this is supposed to be applied. You describe design basis event simulations, but the design basis event environment will be different for different plants, if I am not mistaken, isn't that correct?

MR. AGGARWAL: Correct.

MEMBER BROWN: And so for applications in the commercial plants, do licensees qualify explicitly for theirs? Or do the cable manufacturers have an envelope within which they

operate that they may qualify? I mean, I just don't know the difference. I know what I used to do. I don't know what you all do.

MR. AGGARWAL: Take a worst-case scenario. Going back to IEEE Standard 32374, they have provided typical cases of PWR and BWR. And most of the cables in that country have been qualified based on those presumptions.

MEMBER BROWN: So that is what the licensees and other folks --

MR. AGGARWAL: The obligation for the licensees to show that their plant-specific conditions did not exceed what is --

MEMBER BROWN: They try to fit it within a generic qualification. But if a plant has a unique situation, they may have to do a supplemental test or qualification.

MEMBER BROWN: And that is in another IEEE standard?

MR. KOSHY: That is another document that I referred to, 323-2003.

MR. HORIN: All right. And it is also a compliance issue. I mean, if you are outside --

MEMBER BROWN: No, that is fine. I just didn't -- I didn't see it in this one, and I didn't have a reference to the other document.

When you do -- again, this is aging. What I am used to seeing is you bend cables, because that is the stress point.

MR. AGGARWAL: That is after the LOCA testing.

MEMBER BROWN: Yes, I saw that also. But it just -- you are doing it to radii that are somewhere in the neighborhood of 20 to 40 times --

MR. AGGARWAL: Yes.

MEMBER BROWN: -- the diameter of the cable. And the applications I have used to qualify were like in the eight to 12, whatever the design bend radius was of the cable. That is the way we tested it, because that way we knew that if we ran into a condition during building a plant we could -- we would not exceed the qualification capability.

And 40 times a two-inch diameter cable is 80 inches, which is a huge bend radius. So --

MR. AGGARWAL: But, remember, these are brand-new cables.

MR. KOSHY: The presumption is this is verification after the post-LOCA condition. In a sense, I aged -- radiation aging, thermal aging, exposed LOCA environment. Then, I am making sure it has enough life for a basic flexibility, not the pulling conditions of the cable.

MEMBER BROWN: But why aren't you interested in the performance of a cable within where it might be installed? For instance, if it's installed with a 15 bend radius, why wouldn't you test it to that, and then just -- in the LOCA conditions?

MR. KOSHY: When the cable is new, you are stressing to a higher surface tension, and you have installed it in place already. So the LOCA is happening much later. So when it is new, it is capable of flexing more, and we believe -- at least

the standard community believes that is not seriously affecting enough to reduce its qualified life.

MEMBER BROWN: I was talking about after your temperature -- after your aging you would have it bent to --

MR. KOSHY: Because the cable is -- we are not going to move in the post-accident environment. It is fixed in place. It is routed, connected --

MEMBER BROWN: I understand that.

MR. KOSHY: -- stays in place.

MEMBER MAYNARD: And just to see if it could withstand some flexibility.

MEMBER BROWN: I've got it installed with a 20-inch bend radius. I would do the aging, the thermal -- you know, thermal and radiation, and then I would do the LOCA. And that is just like it is installed. Then, I would go see, does it embrittle? Does it fall apart or not? As opposed to trying to bend it.

MR. KOSHY: Yes. Some rough bending to see if the insulation will fall apart.

MEMBER BROWN: Okay. You answered my question. We can get on.

VICE CHAIRMAN ABDEL-KHALIK: Let me just ask -- maybe I'm missing something. After a plant is built, how would you test a cable in situ at LOCA conditions?

MR. HORIN: That is one of the questions that we have here. In terms of being able to test the cable proven and effective for the purposes for which you are trying to do the testing, if you are able to utilize the condition -- if there is a condition monitoring technique that is ever shown to be able to get down to the level of measurement that would give you some indication of whether this cable is capable of performing in a LOCA, you know, that would be -- you know, somebody ought to go out and patent that right now.

Right now, condition monitoring, some of the techniques we will find gross failures. They

will find more significant degradation of cables. But it is very difficult to even suggest that there is anything that would get you to that point.

VICE CHAIRMAN ABDEL-KHALIK: But if the bottom-line purpose of this is to show -- is to monitor the condition of the cable to prove that they will actually perform adequately under LOCA conditions, to limit this to in situ methods, is in my opinion inappropriate.

MR. HORIN: Well, that is what we are talking about here.

VICE CHAIRMAN ABDEL-KHALIK: But you are saying --

MEMBER RAY: I think they are looking for change. I am just offering that in situ can only, obviously, detect change.

VICE CHAIRMAN ABDEL-KHALIK: Detect change, but not at LOCA conditions.

MEMBER RAY: That's right. But if you find change, then you have to do something to say, "Well, is the change indicative of a loss of

qualifications."

MEMBER MAYNARD: Especially looking for --

MEMBER ARMIJO: Well, it's reducing your margin from the original qualification, right?

MR. HORIN: Yes.

MEMBER ARMIJO: So there must be some margin at which you would say it probably won't --

MR. HORIN: And that is the question: do we have any techniques that can get us to that?

MEMBER RAY: And then, you look at what is the significance of the change to the qualification? Which means you had to pull some cable in. All right? But the first thing you do is figure out, has there been any change?

Now, the argument is that isn't sufficiently dispositive on qualification.

MR. AGGARWAL: Just for clarify, condition monitoring is not replacing your regular testing of the cable that you had to have creating the cable -- thermal radiation, and then the LOCA

testing, and the tests we talked about. That is what you call testing at Level III. So the staff is not telling that condition monitoring is going to replace LOCA testing. That is given, that you will do that.

What the staff is saying, that -- just do the test once, and then don't walk away for 40 years, 60 years, 80 years. And Bill described some of those matters with -- they are doing, but that is not in any of the regulatory guides. But that will be one of the acceptable ways to meet the requirement of the guide.

VICE CHAIRMAN ABDEL-KHALIK: I guess, you know, I brought up this question reading the suggested alternate wording that you have on this page where you say, "Where appropriate, these activities should be supplemented with condition monitoring techniques that are proven to be effective for assessing in situ degradation for the cables and conditions of concern."

MR. HORIN: You want me to say what that

means?

VICE CHAIRMAN ABDEL-KHALIK: Please.

MR. HORIN: Yes. This guide is focused on providing some guidance, and what we are looking at is whether, for cables that have already been installed -- and Mr. Aggarwal was pointing out -- this doesn't address the testing issue -- for cables that have already been installed, do we have a methodology that will provide information that will address the condition of the cable with respect to its ability to perform under the conditions for which it is expected to perform? And that is all that is saying, and that these methods would not be -- we wouldn't be pulling cable. We would have to be determinating, reterminating. We would be --

MEMBER RAY: Yes. But you are never going to meet the standard. What you need, as I said to Said, is something that detects a change, and then you pull the cable and see if the change affects --

MR. HORIN: And I think that is a great,

you know, point, and I think that is the type of thing that would be in the context of what we are talking about coming up later this year.

MEMBER RAY: All right. Okay.

VICE CHAIRMAN ABDEL-KHALIK: Or perhaps laboratory samples that are appropriately aged.

MEMBER RAY: That is another way to do it, pull some samples.

VICE CHAIRMAN ABDEL-KHALIK: That would truly represent the conditions in the field and you measure how the degradation is with aging at LOCA conditions. So my objection is to the word "in situ," because that sort of constrains the acceptability of the --

MR. HORIN: And we say "in situ" here because that is what this is aimed -- this reg guide is aimed at.

MEMBER RAY: Yes. The demonstration of, you know, ability to provide information doesn't necessarily mean that demonstrating the adequacy of that particular technique is limited to in situ. It

could be laboratory. But what we are concerned with is we right now have a situation where it is essentially a guidance document that would say do something, we don't care what it is, just do something.

VICE CHAIRMAN ABDEL-KHALIK: I'm sorry, but I read your wording differently.

MR. HORIN: Okay. And we'll stop.

MEMBER MAYNARD: I think we've aired this out enough. I think we understand the positions, and we have tried to solve the problems and everything here. But I think we have enough to lead our discussion when we get to this. So unless there is any other pressing questions for the staff, or for Mr. Horton --

MR. HORIN: Horin.

MEMBER MAYNARD: -- Horin, I will go back to my original opening statement. I never thought cable qualification could be so exciting.

(Laughter.)

And with that, I will turn it over --

back to you, Mr. Chairman.

CHAIRMAN BONACA: Thank you. And with that, if there are no further questions from the public, we are going to take a break until 4:30, and we will start then.

(Whereupon, at 4:13 p.m., the proceedings in the foregoing matter went off the record.)

1

2

3

4

United States Nuclear Regulatory Commission

*Protecting People and the Environment*

# Advisory Committee on Reactor Safeguards (ACRS) License Renewal Full Committee Vogtle Electric Generating Plant (VEGP)

## Safety Evaluation Report (SER)

April 2, 2009

Donnie J. Ashley, Project Manager
Office of Nuclear Reactor Regulation

# Introduction

- Overview of VEGP license renewal review
- License Renewal Audit and Inspection
- SER Section 2: Scoping and Screening review results
- SER Section 3: Aging Management review results
- SER Section 4: Time-Limited Aging Analyses (TLAAs)

# Overview

- License Renewal Application (LRA) submitted June 2007

Recap of November 2008 Subcommittee Meeting

- 87 RAI items issued
- 173 Audit Questions
- 40 Commitments
- Additional Components Brought Into Scope
- Draft SER issued November 19, 2008
- Final SER issued March 13, 2009
- No Open Items (OIs)
- No Confirmatory Items
- Three (3) License Conditions [(1)]

# Overview

Recap of November 2008 Subcommittee Meeting (cond't)

- Material Condition in Containment
  - Identified during June Regional Inspection
  - Region has evaluated past inspections and will continue to monitor
- Boral
  - Questions about adequacy of AMP
  - Telecon with Applicant and Tech Staff
  - Revised AMP commitment
- Water in Cable Pull-Box
  - Applicant revised monitoring program
  - Region will continue to monitor

# Overview (cond't)

## Subsequent to sub-committee meeting

- 7 additional RAIs issued on Boral
  - Resulted in a revised commitment to provide for inspection of panels in addition to water chemistry program.

- 94 total RAIs

- Applicant provided update on Commitments
  - Added one new commitment on debris screens.

# Audits and Inspections

- Scoping and Screening Methodology Audit
  9/17 – 9/21, 2007
- Aging Management Program (AMP) Audit
  10/15 – 10/19, 2007
- Aging Management Review (AMR) Audit
  12/9 – 12/14, 2007
- Region II Inspection (Scoping and Screening & AMP)
  5/19/ – 06/06, 2008

# Audit and Review

- Audit Summary (ADAMS Accession No. ML080430373)
  - Publicly Available, Issued on September 30, 2008
  - Audit Summary Includes :
    - Audit and Review Results
    - Audit and Review Q&A Database
    - List of Documents Reviewed by the Audit and Review Team

# Regional Inspection

- Two Weeks on Site
- AMP inspection May 19 – June 6, 2008
- 10 CFR 54.2(a)
- License renewal chapter - MC 2516
- License renewal inspection procedure IP 71002

# Regional Inspection

- Inspectors identified enhancements
  - Manhole flooding with Medium Voltage Non-Safety Related Cable
  - Condition inside containments
- Region II will follow up on these issues during a future IP 71003 inspection

# Regional Inspection

The inspection team concluded that the scoping and screening of non-safety related systems, structures, and components, was implemented as required by the rule and the aging management portions of the license renewal activities were conducted as described in the application.

United States Nuclear Regulatory Commission
*Protecting People and the Environment*

# SER Section 2: Structures and Components Subject to Aging Management Review

<u>Section 2.1</u> Scoping and Screening Methodology

<u>Section 2.2</u> Plant-Level Scoping Results

<u>Section 2.3</u> Mechanical Systems Results

<u>Section 2.4</u> Structures Results

<u>Section 2.5</u> Electrical and I&C Control Systems

# Section 2 – Conclusion

Based on its review of the LRA, the onsite audit results, and additional information submitted as the result of RAIs, the staff concluded that:

- The applicant's scoping and screening methodology meets the requirements of 10 CFR 54.4 and 54.21(a)(1), and
- That the applicant adequately identified those SSCs within the scope of license renewal in accordance with 10 CFR 54.4(a), and those SCs subject to an AMR in accordance with 10 CFR 54.21(a)(1)

U.S.NRC
United States Nuclear Regulatory Commission
*Protecting People and the Environment*

# Section 3: Aging Management Review Results

## Aging Management Programs (AMPs)

- 38 AMPs
  - 14 are NEW programs
  - 24 are EXISTING programs
- 20 programs with exceptions and/or enhancements
- 11 are plant specific
- 7 are consistent with GALL

U.S.NRC
United States Nuclear Regulatory Commission
*Protecting People and the Environment*

# Section 3 – Conclusion

Based on its review of the LRA and additional information submitted as the result of RAIs, the staff concluded that:

- Aging effects will be managed so that the intended functions will be maintained consistent with the CLB for the period of extended operation, per 10 CFR 54.21(a)(3), and
- That activities authorized by the renewed license would continue to be conducted in accordance with the CLB, and any changes made to the CLB in order to comply with 10 CFR 54.21(a)(3), would be in accordance with the NRC's regulations

U.S.NRC
United States Nuclear Regulatory Commission
*Protecting People and the Environment*

# SER Section 4: Time-Limited Aging Analyses

- 4.1 TLAA Process
- 4.2 Reactor Vessel Neutron Embrittlement
- 4.3 Metal Fatigue
- 4.4 Environmental Qualification of Electrical Equipment
- 4.5 Concrete Containment Tendon Prestress
- 4.6 Containment Liner Plate Metal Containments and Penetration Fatigue
- 4.7 Other Plant Specific TLAA

# 4.7 Other Plant Specific TLAAs

- 4.7.1 Leak Before Break Analysis
- 4.7.2 Fuel Oil Storage Tank Corrosion Allowance
- 4.7.3 Steam Generator Tube, Loss of Material
- 4.7.4 Cold Overpressure Protection System
- 4.7.5 Underclad Cracking of Reactor Pressure Vessel

U.S.NRC
United States Nuclear Regulatory Commission
*Protecting People and the Environment*

# Section 4 - Conclusion

Based on its review of the LRA and additional information submitted as the result of RAIs, the staff concluded that the applicant provided an adequate list of TLAAs, per 10 CFR 54.3 and that the:

- TLAAs will remain valid for the period of extended operation, per 10 CFR 54.21(c)(1)(i)
- TLAAs have been projected to the end of the period of extended operation, per 10 CFR 54.21(c)(1)(ii)
- Aging effects will be managed for the period of extended operation, per 10 CFR 54.21(c)(1)(iii)

U.S.NRC
United States Nuclear Regulatory Commission
*Protecting People and the Environment*

# Overall Conclusion

The staff has concluded there is reasonable assurance that the activities authorized by the renewed license will continue to be conducted in accordance with the CLB, and that any changes made to the VEGP CLB in order to comply with 10 CFR 54.29(a) are in accordance with the Act and the Commission's regulations.

U.S.NRC

United States Nuclear Regulatory Commission

*Protecting People and the Environment*

U.S.NRC
United States Nuclear Regulatory Commission
*Protecting People and the Environment*

# License Conditions (1)

- The first license condition requires the applicant to include the UFSAR supplement required by 10 CFR 54.21(d) in the next UFSAR update, as required by 10 CFR 50.71(e), following the issuance of the renewed license.

- The second license condition requires future activities identified in the UFSAR supplement to be completed prior to the period of extended operation.

- The third license condition requires that all capsules in the reactor vessel that are removed and tested meet the requirements of American Society for Testing and Materials (ASTM) E 185-82 to the extent practicable for the configuration of the specimens in the capsule. Any changes to the capsule insertion and withdrawal schedule, including use of spare capsules, must be approved by the staff prior to implementation. All capsules placed in storage must be maintained for future insertion. Any changes to storage requirements must be approved by the staff, as required by 10 CFR Part 50, Appendix H.

U.S.NRC

United States Nuclear Regulatory Commission

*Protecting People and the Environment*

# Digital Instrumentation Control Interim Staff Guidance on Highly Integrated Control Room - Human Factors, Licensing Process Issues, and Related Matters

April 2, 2009


Steven Arndt
Office of Nuclear Reactor Regulation

David Desaulniers
Office of New Reactors

G. Edward Miller
Office of Nuclear Reactor Regulation

# Agenda

- Background on Steering Committee
  - Digital I&C Project Products
  - Path Forward
- Overview of ISG-5, Revision 1
  - Manual Operator Action Background
  - Overview of ISG for crediting manual operator actions
- Overview of ISG-6
  - Process Overview
  - Format of ISG-6
  - Tiers of Complexity
  - Phases of Process
  - Areas of Review
  - Path Forward

# Background on Steering Committee

- Digital I&C Steering Committee formed January 2007
- 7 Task Working Groups formed to address specific issues
  - TWG-1 Cyber Security
  - TWG-2 Diversity and Defense in Depth (D3)
  - TWG-3 Risk-Informing Digital I&C
  - TWG-4 Highly-Integrated Control Room – Communications
  - TWG-5 Highly-Integrated Control Room – Human Factors
  - TWG-6 Licensing Process
  - TWG-7 Fuel Cycle Facilities
- Industry established counterpart groups
- Over 100 public meetings to define, discuss and resolve issues

# Status of Digital I&C Products

- TWG-1: Cyber Security - ISG-1 Issued 12/2007
  - ACRS Review: Letter dated April 29, 2008
  - Next Steps: Update SRP and RG 1.152 following rulemaking and RG 5.71

- TWG-2: Diversity and Defense in Depth (D3) - ISG-2 Issued 9/2007
  - Industry Concern: Credit defensive measures and component level actuation
  - ACRS Review: Letter dated October 16, 2007
    - Recommends Process to Evaluate < 30 Minute Operator Action
  - Next Steps: Complete NUREG on diversity attributes, update SRP

# Status of Digital I&C Products (cont'd)

- TWG-3: Risk Informing Digital I&C - ISG-3 Issued 8/2008
  - Industry Concern: Risk informing guidance on D3 and policy on diverse actuation systems
  - ACRS Review: Letter dated April 29, 2008
    - Recommends emphasize failure modes vs. sensitivity studies
    - ISG-3 was revised to incorporate recommendations
  - Next Steps: Methods for obtaining risk insights and risk informing digital I&C to be addressed in 5-year research plan

- TWG-4: Highly Integrated Control Room Communications ISG-4 Issued 9/2007
  - ACRS Review: Letter dated October 16, 2007
  - Next Steps: Update SRP, RG 1.152, and IEEE 7.4.3.2

# Status of Digital I&C Products (cont'd)

- TWG-5: Highly Integrated Control Room Human Factors ISGs issued 9/2007 and 11/2008
  - ACRS Review: Letter dated October 16, 2007
    - Present ISG on Manual Action today
  - Next Steps: Rulemaking on Safety Parameter Display System, and update NUREG, Reg. Guide, and SRP

- TWG-6: Licensing Process - ISG-6 under development, inspection procedure issued 10/2008, audit procedure issued 12/2008
  - Industry Concern: Level of staff review and slow progress on ISG
  - ACRS Review: Letter Dated April 29, 2008
    - Present update today
  - Next Steps: Bi-weekly public meetings, workshop on licensing experiences in Spring 2009, add cyber security, issue final ISG

# Status of Digital I&C Products (Cont.)

- TWG –7: Fuel Cycle Facilities - ISG-7 under development
  - ACRS Review: Request Review End of Summer
  - Next Steps: Issue ISG, update and issue appropriate NUREGs
- Ongoing Work
  - Updates to Regulatory Documents
  - Operational Program Updates

# Path Forward

- Complete ISG for Licensing and Fuel Cycle Facilities
- Update Regulatory Documents
- Address Operational Issues
- Continue to use ISGs in Ongoing Reviews
- International Cooperation
  - MDEP
  - Bilateral Work
  - COMPSIS
  - IAEA and Other Interactions
- Ongoing Research Activities

# ISG-05, Revision 1

- Manual operator actions
- Computer-based procedures
- Minimum inventory

# Background

ISG-02, Interim Staff Guidance on Diversity and Defense-in-Depth Issues, September 26, 2007

- Provided acceptable methods for implementing diversity and defense-in-depth (D3) in digital I&C system designs
- Clarified use of operator action as a diverse defensive measure and established corresponding operator action times

# Background

ISG-02 states:

"Manual operator actions may be credited for responding to events in which the protective action subject to a CCF is not required for at least the first 30 minutes and the plant response is bounded by BTP 7-19 recommended acceptance criteria."

# Background

- Industry sought flexibility and guidance to credit manual operator actions in less than 30 minutes
- ACRS letter (10/16/07) recommended development of an alternative process to the 30-minute criterion
- Scope of TWG-5 action plan expanded to develop guidance for crediting manual operator actions
- Public interactions between TWG-5 and industry counterparts
- Industry developed white paper methodology for crediting manual operator actions
- Staff considered and incorporated, as appropriate, white paper methods in developing an amendment to ISG-05

# ISG-05 (Revision 1)

## Manual Operator Action ISG

- Scope
- Staff Position
- 4-Phase Methodology

# Scope

- Manual actions credited in D3 analyses for coping with abnormal operational occurrences and postulated accidents (AOO/PAs) concurrent with software CCF of the digital protection system
- New and existing reactors

# Staff Position

Credited actions should be:

- Included in emergency operating procedures (EOPs)
- Executed from within the main control room
- Demonstrated to be feasible and reliable
- Addressed in the human factors engineering (HFE) program consistent with NUREG-0711

# Overview of ISG-5

## Method

4-Phases:

- Analysis
- Preliminary Validation
- Integrated System Validation
- Long-term Monitoring

# Analysis

## Objective

- Estimate *time available* and *time required*
- Identify critical assumptions and credible operator errors
- Establish adequate *margin*

# Analysis

## Method

Time Available

- Use methods and realistic assumptions consistent with BTP 7-19.

Time Required

- Use a documented sequence of actions (from task analysis, EPGs, EOPs)
- Use one of several acceptable methods for developing estimates of time required to perform action sequence

Margin

- Time to recover from credible errors

# Analysis

## Examples of Acceptable Methods

- Operator interviews and surveys
- Operating experience reviews
- Software models of human behavior, such as task network modeling
- Use of control/display mockups
- Expert panel elicitation
- ANSI/ANS 58.8, *Time Response Design Criteria for Safety-Related Operator Actions (task decomposition)*

# Analysis

## Review Criteria Topics

- Time required
- Time available
- Use of alarms, controls, and displays
- Use of symptom/function-based EOPs
- Staff size, composition and augmentation
- Level of detail
- Identification of credible operator errors

# Preliminary Validation

Objective

- Independent confirmation of analysis results

Applicability

- Only required for those vendors/applicants who are using the 10 CFR Part 52 process

Method

- Use diverse methods that are as realistic as maturity of design allows
- Submit analysis and results for NRC review as part of D3 submittal(s)

# Preliminary Validation

## Examples of Acceptable Methods

- Tabletop analysis
- Walkthrough/talkthrough analysis
- Software models of human behavior, such as task network modeling
- Use of control/display mockups
- Man-in-the-loop prototype testing
- Real-time validation using part-task simulator

# Preliminary Validation

Review Criteria Topics

- Independence from Phase 1
- Validation team qualifications
- Use of two or more methods
- Validation of time required

# Preliminary Validation

## Results

- Shall be documented in the D3 analysis for NRC review
- Should support high confidence that the time required for manual operator actions will satisfy the success criteria for the integrated system validation

# Integrated System Validation

Objective

- Confirm operators are able to perform credited actions in real-time using as-built design

Method

- Use plant-referenced simulator capable of realistically representing AOO/PA with CCF
- Validate time required using both nominal and TS minimum crews
- Accomplish as part of HFE program activities per NUREG-0711

# Integrated System Validation

Review Criteria Topics

- Integration with HFE program
- Simulator
- Personnel
- Operational Conditions
- Performance Times

# Integrated System Validation

Performance Time Criteria

- For each AOO/PA, the *mean performance times* of the crews is less than or equal to the estimated *time required* derived from the analysis phase.
- For each AOO/PA, the *performance time* for each crew, *including margin* determined in the time required analysis, is less than the analyzed *time available*.

# Long-term Monitoring

## Objective

- Ensure credited actions remain feasible and reliable

## Method

- Design and configuration controls ensure discrepancies from D3 assumptions and constraints are identified and corrected
- Training keeps performance within assumptions of the analysis

# Long-term Monitoring

## Review Criteria

- A long-term monitoring strategy is capable of tracking performance of the manual operator actions to demonstrate that performance continues to support the associated D3 analysis
- The program is structured such that corrective actions are formal, effective, and timely

# ISG-5 Path Forward

- Develop BTP and revise SRP
- Support future development and revision of ANSI/ANS 58.8, Time Response Design Criteria for Safety-Related Operator Actions

# Introduction

- Purpose of ISG-6
  - Refined licensing process
  - Expectations for documentation
  - Knowledge management
- Lessons learned from recent I&C amendment reviews

# Process Overview

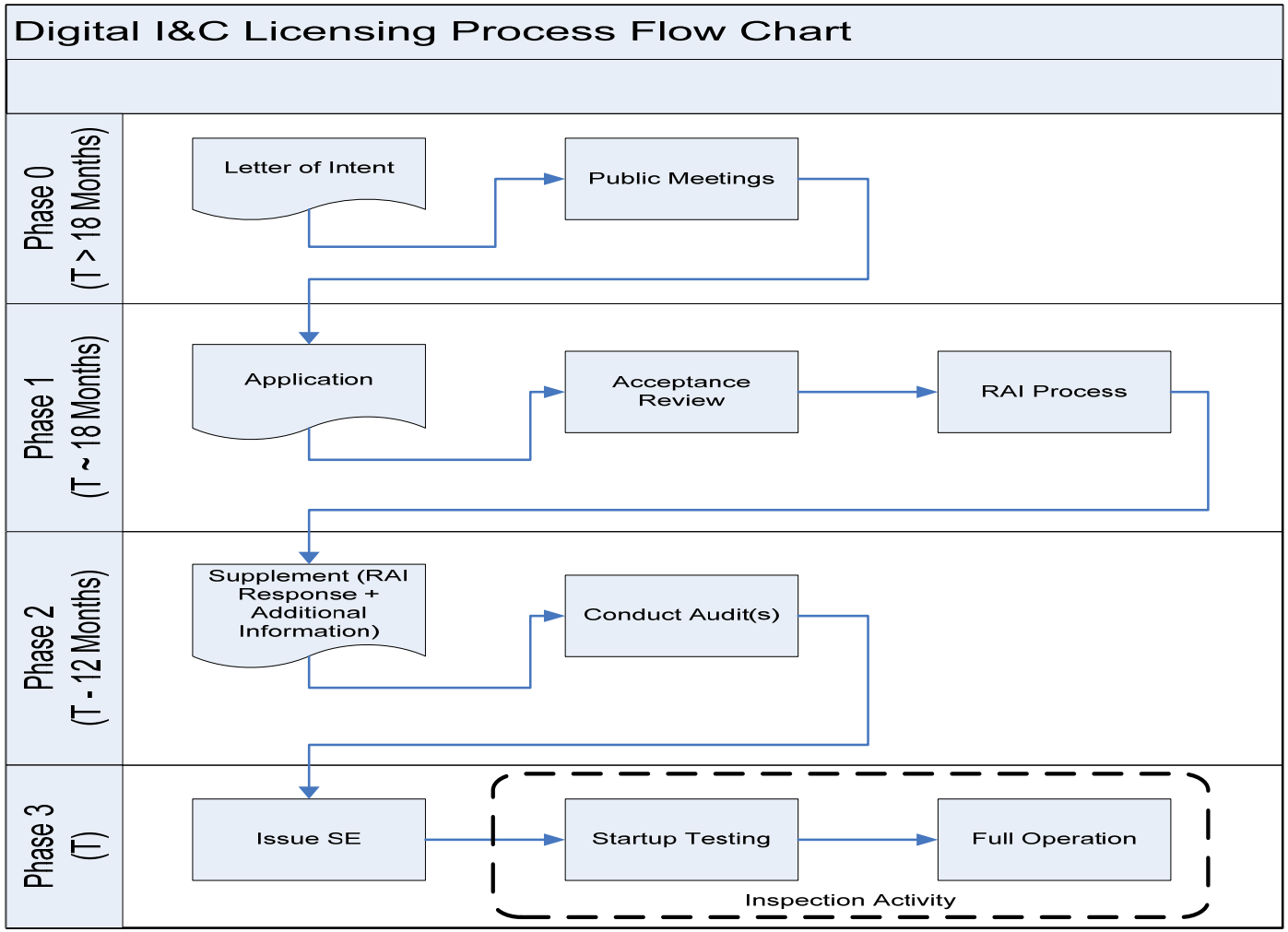

# Format of ISG-6

- Introduction
- Purpose
- Licensing Process
  - Process Overview
  - Pre-Application Meetings
  - Initial Application
  - Continued Review and Audit
  - Implementation and Inspection
  - Review Areas
    - Scope of Review
    - Information to be Provided
    - Regulatory Evaluation
    - Technical Evaluation
    - Conclusion
- Appendices (Example Formats)

# Tiers of Review

- Each Tier corresponds to an expected review complexity:
  - Tier 1: Previously approved system, no deviations from topical report, review to focus on plant specific aspects, least review effort expected.
  - Tier 2: Previously approved system, with deviations, moderate review effort expected.
  - Tier 3: Totally new system, extensive review effort expected. Thorough review of all technical areas.

# Draft Review Areas

- Working List of Review Areas
  - Defense-in-depth & Diversity
  - Hardware Architecture
  - Hardware Design Process and Quality Control
  - Communications
  - Software Architecture
  - Software Design Process
  - System Qualifications
  - System, Hardware, Software, and Methodology Modifications
  - Technical Specifications
  - IEEE 603 Compliance
  - IEEE 7-4.3.2 Compliance
  - Cyber Security

# Path Forward

- Monthly Public Meetings
  - Next meeting is April 28, 2009
- Monthly conference calls on status
- Full Draft of ISG for Public Comment
  - Summer, 2009
- ISG-6 Issued
  - Fall, 2009
- Pilot application encouraged

# NIST Center for Neutron Research
# ACRS Meeting April 2, 2009

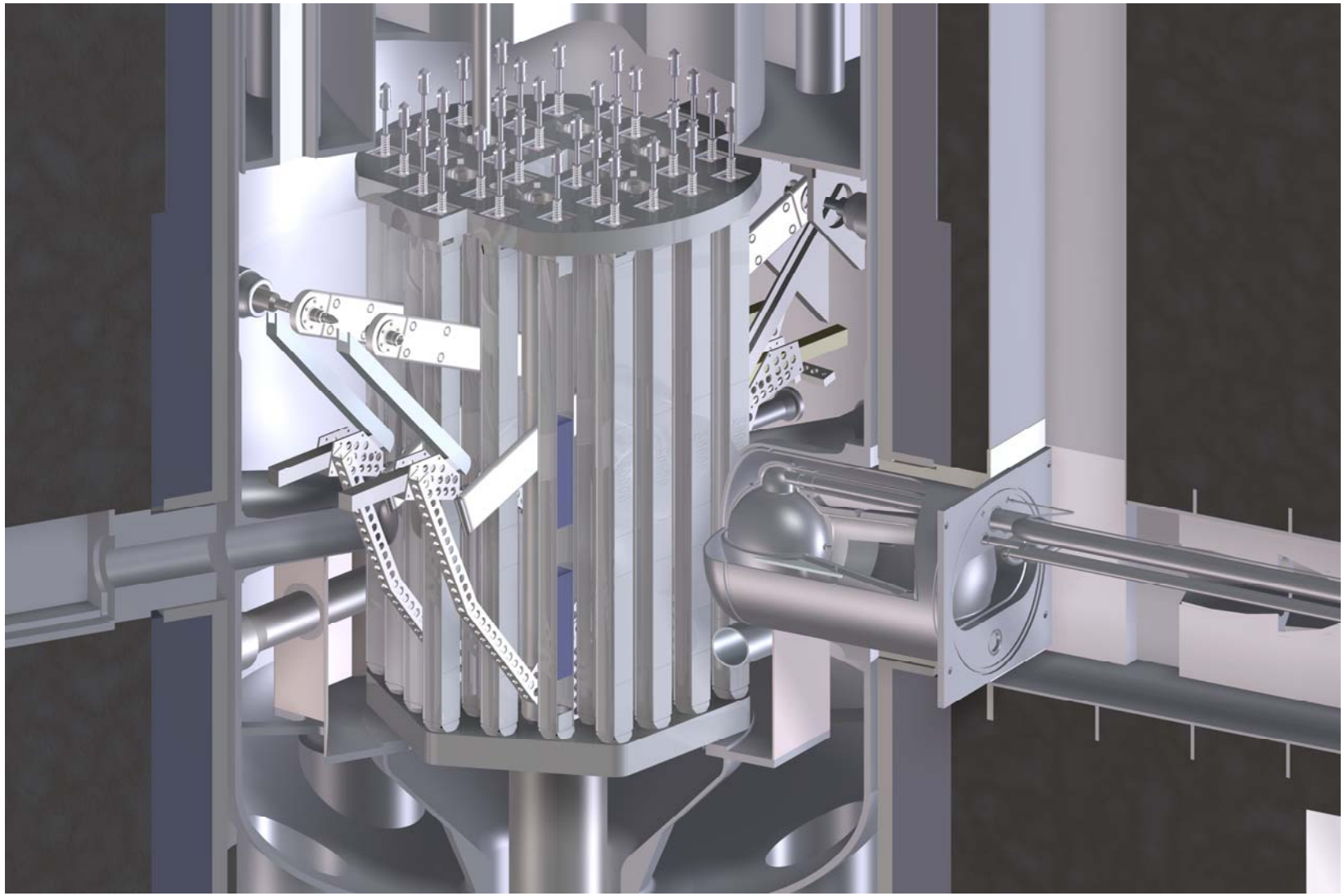

# ACRS Meeting April 2, 2009

- **<u>NIST Participants</u>**
- Dr. Robert Dimeo, Director NCNR
- Dr. Michael Rowe, Special Advisor to the NCNR Director
- Dr. Wade Richards, Chief Reactor Operations & Eng.
- Dr. Paul Brand, Chief Reactor Engineering
- Dr. Robert Williams, Section Head Nuclear Analysis
- Mr. David Brown, Supervisor Health Physics
- Mr. Daniel Flynn, Senior Reactor Operator
- Mr. John Crosby, Enviro Tech Sensors Inc.

# ACRS Meeting April 2, 2009

- Description of NCNR
- Description of the NBSR
- Licensing Basis Accidents
- Subcommittee Follow-up Items

# ACRS Meeting April 2, 2009

## Description of the NCNR

# The NIST Center for Neutron Research
# A National User Facility

The mission of the NIST Center for Neutron Research is to assure the availability of neutron measurement capabilities to meet the needs of U.S. researchers from industry, university and other Government agencies.

- 23 instruments with access based on technical merit
- Highly interdisciplinary: basic/applied materials science & fundamental physics
- More than 2200 research participants per year
- Over 300 scientific publications per year
- Numerous partnerships with other agencies, industry, and academia (e.g. NSF, ExxonMobil, FDA, Smithsonian, Johns Hopkins, UMD,…)

*Largest user program and highest productivity of any neutron facility in the US* [1]

[1] The American Physical Society: *Access to Major International X-Ray and Neutron Facilities*, November 2008.

# The National Context

"The NIST facility is the only U.S. facility which currently provides a broad range of world-class capability." [1]

"…the NIST Center for Neutron Research (NCNR) currently has the largest number of users in the United States, largely because of its modern suite of cold neutron instruments." [2]

"The highest priority for federal investments in neutron scattering is to fully exploit the best U.S. neutron source capabilities...for the benefit of the broadest scientific community." [1]

"To improve access and to enable the user community to grow it is critically important to increase the number of beamlines and instruments at major facilities in the US." [2]

[2] The American Physical Society: *Access to Major International X-Ray and Neutron Facilities*, November 2008.

[1] The Office of Science and Technology Policy Interagency Working Group on Neutron Science: *Report on the Status and Needs of Major Neutron Scattering Facilities and Instruments in the United States*, June 2002.

# Strong Management Support
# NIST and DoC

*NIST and DoC leadership have been extremely supportive of and remain committed to the safe, effective, and reliable operation of the NIST Reactor as a critical component of the NIST measurement mission.*

<u>Past</u>

- Upgrade from 10 MW to 20 MW (1984)
- Cold neutron source/guide hall (1994)
- Upgraded cold source installed (2002)
- Cooling tower w/plume abatement installed (2002)
- Initiative to expand access by supporting more instruments and developing new capabilities (2004)

<u>Present/future</u>

- NCNR Expansion and Reliability Enhancements Project (2007-2011)

# ACRS Meeting April 2, 2009

## Description of the NBSR

# ACRS Meeting April 2, 2009

- The National Bureau of Standards Reactor (NBSR) is a heavy water moderated and cooled, enriched fuel, tank type reactor designed to operate at 20Mw.
- It is a custom designed variation of the Argonne CP-5 class reactor.

# NIST Center for Neutron Research

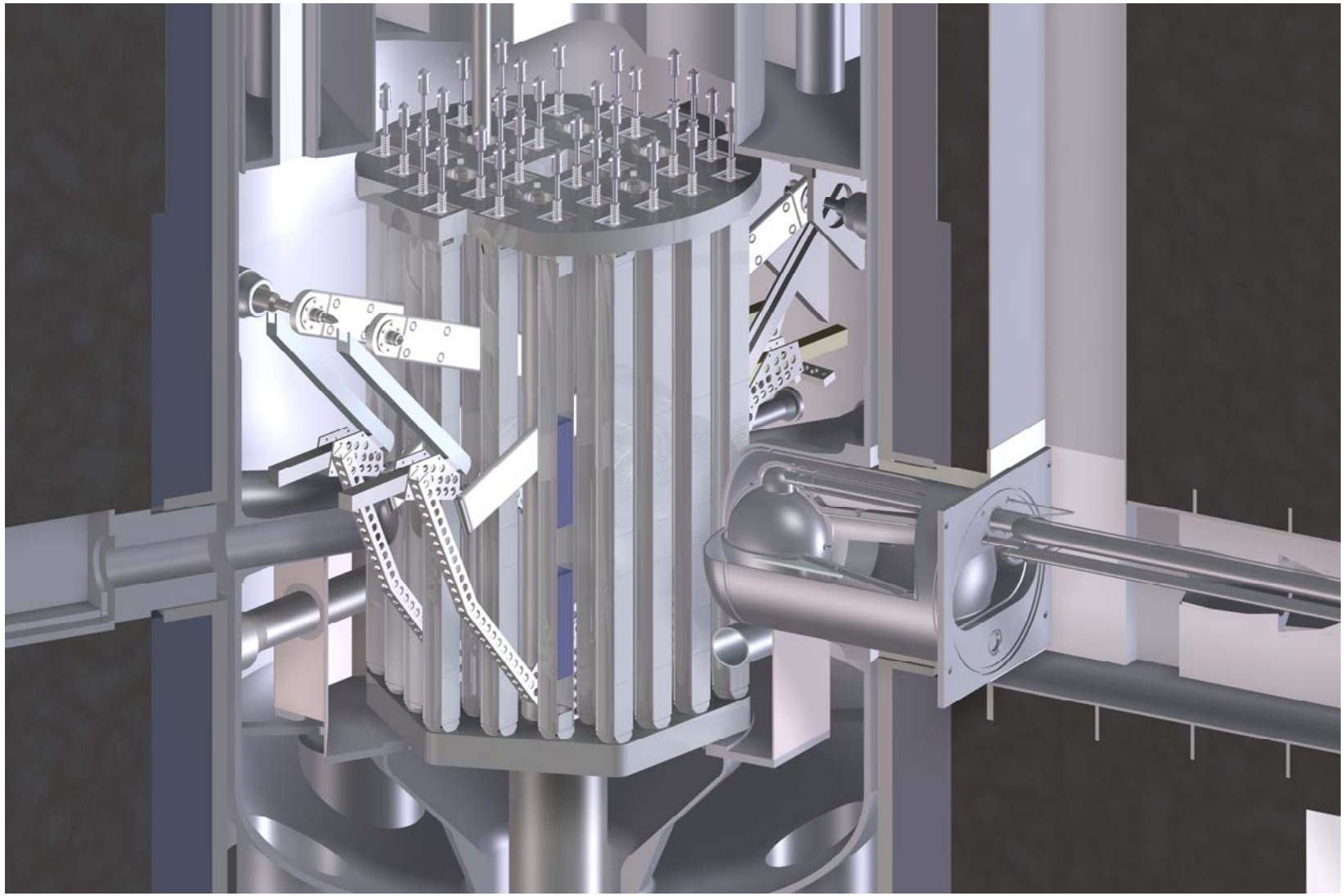

# ACRS Meeting April 2, 2009

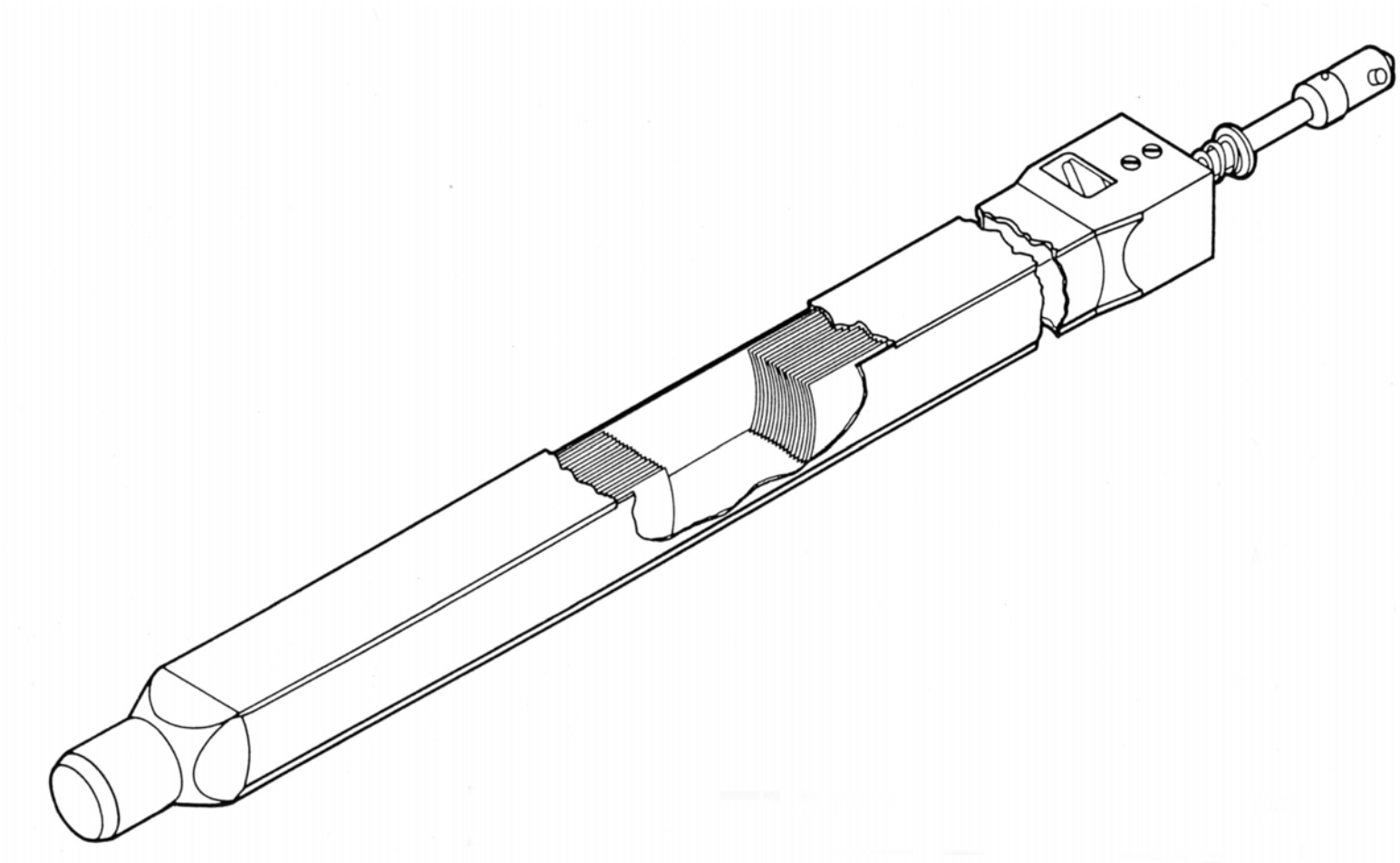

# ACRS Meeting April 2, 2009

- The NBSR includes many inherent, passive safety features
- The prompt neutron lifetime is long due to the heavy water
- The reactivity coefficients of void and temperature are negative
- Reactor operates in a low temperature, unpressurized condition and has no large stored energy content.

# ACRS Meeting April 2, 2009

# **Licensing Basis Accidents**

# Accidents Analyzed

- **Startup Accident**
  - 100 kW → 130% at $\Delta\rho/\Delta t = 5x10^{-4}\ \Delta\rho/s$
- **Maximum Reactivity Insertion**
  - Experiment removed $\Delta\rho$ =.5% in .5 sec
- **Loss of Coolant**
  - Inlet pipe break in process room
  - Offsite tritium doses within 10 CFR 20 limits
- **Misloading of Fuel**
  - Fresh element in all locations

# Accidents Analyzed II

- **Loss of Flow**
  1. Loss of Offsite Power *
  2. Single Pump (1 of 3) Seizure *
  3. Throttling of Inlet Valves to either Plenum
  4. Spurious signal closing DWV-19 (Hot Leg)
  5. Loss of Both Shutdown Coolant Pumps
- **Maximum Hypothetical Accident**

  - Postulates complete melting of fuel element

  - Satisfies 10 CFR 100 limits

* Open Item

# Open Item

- Flow coastdown data out-of-date.
- New data will be measured this week.
- BNL will analyze loss of flow accidents again with updated coastdown data.

# ACRS April 2, 2009

## Subcommittee Follow-up Items

# ACRS Meeting April 2, 2009

- Discuss the methodology used to monitor the groundwater at the reactor site for contamination by releases of radioactive material from the facility.

# ACRS Meeting April 2, 2009

- Provide a discussion of seismically-induced damage to any structures and components that have been installed since the analysis in 1966 whose failure could impact proper operation of safety-related structures and components.

# ACRS Meeting April 2, 2009

- The most recent revision of the proposed Technical Specifications contains some surveillance requirements that are less conservative than those specified in the current TSs. Provide a discussion that explains why the recommended surveillance requirements contained in ANS 15.1-2007 are inappropriate or overly conservative for the NBSR. Provide a discussion that explains how the decrease in conservatism maintains the current level of safety.

# ACRS Meeting April 2, 2009

- Provide a detailed step-by-step explanation of the experiment review, approval, and implementation process. Include discussions of the applicable requirements specified in the proposed Tss and administrative requirements that ensure no experiment will have an adverse impact on reactor safety or the health and safety of the public and staff personnel.

# ACRS Meeting April 2, 2009

- Provide a discussion and analysis of the adequacy of natural circulation cooling in the event that DWV-19 is isolated during extended full-power operation. Include a discussion of the heat sinks, flow paths, peak vessel temperature, and ability of the pressure relief valve to perform its intended function. Also discuss any actions or preventative measures to mitigate the consequences of such a occurrence or measures taken to prevent it altogether.

# ACRS Meeting April 2, 2009

- The moderator temperature coefficient and moderator void coefficient appeared to be inconsistent with each other. Discuss how these coefficients were determined including methods of calculation. Discuss whether these coefficients necessarily need to be consistent given the methods of calculation. Discuss how these coefficients represent the most limiting conditions in the coolant and/or how the values chosen for these coefficients provide adequate conservatism.

# ACRS Meeting April 2, 2009

- Discuss the storage and disposal of Class B and Class C waste that may be generated at the NBSR during the period of the renewed license.

# ACRS Meeting April 2, 2009

- Proposed TS 3.9.1,"Fuel Storage", specified that "all fuel elements shall be stored and handled in a geometry such that the calculated $k_{eff}$ shall not exceed 0.90 under optimum conditions of water moderation and reflection". Provide a summary and discussion of this calculation for storage in the spent fuel pool.

# ACRS Meeting April 2, 2009

- Clarify whether the confinement building design is based on loading from 100-mph sustained winds or a 100-mph wind gust.

# ACRS Meeting April 2, 2009

- Discuss the derivation of the 50-year and 100-year numerical scaling factors for wind speeds. If Caribbean hurricane wind data was used to estimate the 100-year maximum wind gust speed at the NBSR site, provide a discussion of the relevance of that date to winds at the NBSR site. Otherwise, provide a discussion of the wind data used to estimate the 100-year maximum wind gust speed for the NBSR site.

# ACRS Meeting April 2, 2009

- In March 2008, storms in the Washington DC metro area generated wind gust speeds of 74 mph and 60 mph measured at Regan National Airport and 66 mph measured at Dulles International Airport. Discuss how this storm data affects the projection of the 100-year maximum wind gust speed.

# ACRS Meeting April 2, 2009

- Discuss the technical basis for the applied additional rain-on-snow loading including historical data to justify the assumed 50% rain fraction.

# ACRS Meeting April 2, 2009

**The End**

U.S.NRC
UNITED STATES NUCLEAR REGULATORY COMMISSION
*Protecting People and the Environment*

# Advisory Committee on Reactor Safeguards (ACRS) License Renewal Full Committee

## National Institute of Standards and Technology National Bureau of Standards Test Reactor License Renewal

April 2, 2009

William B. Kennedy, Project Manager
Office of Nuclear Reactor Regulation

U.S.NRC
UNITED STATES NUCLEAR REGULATORY COMMISSION
*Protecting People and the Environment*

# Introduction

- National Institute of Standards and Technology (NIST) National Bureau of Standards Reactor (NBSR) License Renewal
- Topics:
  - Licensing History
  - Staff Review Criteria
  - Overview of the Safety Evaluation Report (SER)
  - Resolution of Open Items in the draft SER
  - Additional Open Item in the final SER

# Licensing History

- 1961
  - The National Bureau of Standards applied for a construction permit and operating license for a 10 Megawatt thermal (MW(t)) heavy-water-cooled-and-moderated reactor
- 1963
  - The Atomic Energy Commission (AEC) issued a construction permit
- 1967
  - The AEC issued Provisional Operating License No. TR-5

# Licensing History

- 1970
  - The AEC issued Facility License No. TR-5 with a term of 15 years
- 1980
  - The National Bureau of Standards applied for a 20-year renewal and an increase in the maximum licensed power level to 20 MW(t)
- 1984
  - The NRC issued the renewed license at the increased power level for a period of 20 years
- NIST filed an application for license renewal April 9, 2004

# Regulatory Review Criteria

- In accordance with Section 104 of the Atomic Energy Act of 1954, as amended (the Act), the NRC must “impose the minimum amount of regulation consistent with its obligations under this Act...”
- 10 CFR Part 54 does not apply to license renewal for non-power reactors

# Regulatory Review Criteria

- Non-power reactor license renewal is primarily conducted in accordance with 10 CFR Parts 20, 50, 51, and 100 (in part, for test reactors)
  - Part 100 guidelines for radiological consequences of accidents apply to test reactors
  - Part 100, Appendix A, “Seismic and Geologic Siting Criteria for Nuclear Power Plants,” does not apply

# Staff Review Guidance

- NUREG-1537, Part II, “Guidelines for Preparing and Reviewing Applications for the Licensing of Non-Power Reactors: Standard Review Plan and Acceptance Criteria,” dated February 1996, provides the staff with review criteria, including:
  - NUREGs pertinent to special areas of the review, e.g., emergency planning
  - Regulatory Guides, division 2
  - American National Standards Institute/American Nuclear Society ANSI/ANS-15 series standards

U.S.NRC
UNITED STATES NUCLEAR REGULATORY COMMISSION
*Protecting People and the Environment*

# Areas of Review

- Facility siting criteria
- Structures, systems, and components
- Reactor characteristics
- Electrical power systems
- Experiment program
- Radiation protection
- Accident analyses
- Technical specifications
- Prior use of components

U.S.NRC
UNITED STATES NUCLEAR REGULATORY COMMISSION
*Protecting People and the Environment*

# Safety Conclusions

Based on its safety evaluation, the staff concludes:

- The design, testing, and performance of SSC important to safety during normal operation are acceptable; safe operation can reasonably be expected to continue
- The licensee's management organization is acceptable to maintain and safely operate the reactor

U.S.NRC
UNITED STATES NUCLEAR REGULATORY COMMISSION
*Protecting People and the Environment*

# Safety Conclusions

- The licensee's research activities and programs, including experiment malfunctions, will not pose a significant risk to continued safe operation of the facility
- Exposures from and releases of radioactive effluents and waste from the facility are not expected to result in doses or concentrations in excess of the limits specified in 10 CFR Part 20, and are consistent with as-low-as-reasonably-achievable principles

U.S.NRC
UNITED STATES NUCLEAR REGULATORY COMMISSION
*Protecting People and the Environment*

# Safety Conclusions

- The licensee has conservatively considered the consequences of a bounding maximum hypothetical accident and shown the radiological consequences to be a small fraction of those specified in 10 CFR Part 100
- The licensee has conservatively considered an appropriate range of postulated credible accidents using appropriate initiating and mitigating assumptions

U.S.NRC
UNITED STATES NUCLEAR REGULATORY COMMISSION
*Protecting People and the Environment*

# Safety Conclusions

- The renewed Facility Operating License and TSs provide reasonable assurance that the licensee will operate the facility in accordance with the assumptions in the SAR
- No significant degradation of SSC has occurred, and the TSs will continue to provide reasonable assurance that no significant degradation of SSC will occur

U.S.NRC
UNITED STATES NUCLEAR REGULATORY COMMISSION
*Protecting People and the Environment*

# Safety Conclusions

- The licensee's physical security plan continues to be acceptable to protect its special nuclear material
- The licensee's emergency plan provides acceptable assurance that the licensee will continue to be prepared to assess and respond to emergency events

U.S.NRC
UNITED STATES NUCLEAR REGULATORY COMMISSION
*Protecting People and the Environment*

# Safety Conclusions

- Continued operation of the NBSR during the period of the renewed license poses no significant radiological risk to the health and safety of the public, facility personnel, or the environment

U.S.NRC
UNITED STATES NUCLEAR REGULATORY COMMISSION
*Protecting People and the Environment*

# Resolution of Open Item

- Draft SER contained one open item regarding a timing requirement in the operator training and requalification program
- NRC issued an RAI on February 18, 2009
- The licensee responded March 3, 2009, stating that the requalification "program shall be administered over a period not to exceed 24 months, followed by successive 24 month periods."

U.S.NRC
UNITED STATES NUCLEAR REGULATORY COMMISSION
*Protecting People and the Environment*

# Resolution of Open Item

- The RAI response resolved the open item by changing the timing requirement in the operator training and requalification program to meet the regulatory requirement
- Final SER concludes that the program meets all applicable regulatory requirements and is consistent with standard ANSI/ANS-15.4, “Selection and Training of Personnel for Research Reactors,” issued 1988

U.S.NRC
UNITED STATES NUCLEAR REGULATORY COMMISSION
*Protecting People and the Environment*

# Additional Open Item

- In addressing the concerns of the ACRS subcommittee members, the licensee identified an unrelated inaccuracy in the pump coastdown data used in two loss-of-flow accident analyses
- The licensee will perform additional analyses to determine if the inaccuracy is safety-significant
- The staff will review the analyses, verify that the conclusions in the final safety evaluation report remain valid, and present the findings to the ACRS full committee later this year

# Backup Material

- Responses to ACRS subcommittee member concerns

U.S.NRC
UNITED STATES NUCLEAR REGULATORY COMMISSION
*Protecting People and the Environment*

# Seismic Hazard Analysis

- NRC staff reviewed the seismic design basis for the facility (0.1 g peak ground acceleration)
- NRC staff reviewed past AEC and NRC approvals of the seismic design for the facility
- The staff concludes that the seismic design is adequate and conservative

U.S.NRC
UNITED STATES NUCLEAR REGULATORY COMMISSION
*Protecting People and the Environment*

# Seismic Hazard Analysis

- The licensee performed a seismic walk-down that identified a wall that, if it collapsed, could affect emergency core cooling system piping
- NRC staff visited the facility to review the walk-down
- The licensee will perform a seismic analysis for a 0.1 g earthquake and reinforce the wall if necessary
- The staff finds this acceptable

U.S.NRC
UNITED STATES NUCLEAR REGULATORY COMMISSION
*Protecting People and the Environment*

# Groundwater Monitoring

- The licensee performs groundwater monitoring by sampling surface water fed by groundwater for tritium and other nuclides
- This is consistent with analysis performed by the U.S. Geological Survey during initial licensing
- A 2006 report confirmed the original analysis
- The staff finds the current groundwater monitoring program acceptable

U.S.NRC
UNITED STATES NUCLEAR REGULATORY COMMISSION
*Protecting People and the Environment*

# Natural Circulation Cooling

- The licensee performed an analysis of natural circulation cooling following full power operation
- The safety margin is greater than 2
- There is adequate time (more than 2 hours) to manually open a valve to reestablish flow
- Even with no action, the reactor vessel will not over-pressurize
- The staff finds the analysis acceptable and the consequences are bounded by the MHA

U.S.NRC
UNITED STATES NUCLEAR REGULATORY COMMISSION
*Protecting People and the Environment*

# Single Failure Criterion

- The staff reevaluated redundancy in systems
- Electrical power is not required for maintaining safe shutdown, so redundancy only provides defense-in-depth
- Multiple monitoring devices for a single variable have diverse designs and are electrically and physically separated
- The staff finds the level of redundancy acceptable to prevent a single failure from causing an unanalyzed accident

U.S.NRC
UNITED STATES NUCLEAR REGULATORY COMMISSION
*Protecting People and the Environment*

# Surveillance Requirements

- The licensee provided additional justification for relaxing surveillance requirements
- Annual emergency sump pump testing is justified by the redundancy in emergency coolant sources
- Quarterly start tests of the diesel generators is consistent with the approved standard
- Annual surveillance of the station battery is supported by operational data and experience
- The staff finds the surveillances acceptable

U.S.NRC
UNITED STATES NUCLEAR REGULATORY COMMISSION
*Protecting People and the Environment*

# Experiment Review Process

- The licensee provided additional clarification of the extent of the experiment review and approval process
- The experiment review process meets the guidance found in the accepted standards
- The staff found that the technical specifications ensure that the licensee's experiment program will not pose a significant risk to the health and safety of the public

U.S.NRC
UNITED STATES NUCLEAR REGULATORY COMMISSION
*Protecting People and the Environment*

# Moderator Coefficients

- The licensee provided additional clarification of the consistency of the moderator void and temperature reactivity coefficients
- The coefficients are consistent when calculated for the entire coolant volume
- The coefficients are always negative
- The accident analyses do not take credit for the coefficients and are conservative
- The staff finds the licensee's treatment of the moderator coefficients acceptable

U.S.NRC
UNITED STATES NUCLEAR REGULATORY COMMISSION
*Protecting People and the Environment*

# Waste Disposal

- The licensee provided additional information on plans for storage and disposal of Class B and Class C wastes
- The NBSR license TR-5 provides possession limits for these wastes and requires appropriate storage and disposal
- The licensee plans to construct an interim storage facility with 40 years of capacity
- The staff finds the licensee's storage and disposal of these wastes acceptable

U.S.NRC
UNITED STATES NUCLEAR REGULATORY COMMISSION
*Protecting People and the Environment*

# Spent Fuel Pool Safety

- The licensee provided results of calculations of criticality safety for the spent fuel storage pool
- The licensee used conservative assumptions to show that the stored fuel cannot achieve criticality
- The effective multiplication factor remains below the limit of 0.9 in the technical specifications
- The staff finds the spent fuel pool storage facility acceptable for storage of spent fuel in accordance with license TR-5

U.S.NRC
UNITED STATES NUCLEAR REGULATORY COMMISSION
*Protecting People and the Environment*

# Site Meteorology - Wind

- The licensee provided additional information on the confinement building design for wind loads
- The building was design and built to the accepted standards at the time of construction
- The licensee's derivation of the maximum 100-year return wind speed was conservative
- The American Society of Civil Engineers (ASCE) standard gives a wind speed of 96 mph which is below the design limit of 100 mph

# Site Meteorology – Snow

- The licensee provided additional information on potential roof snow loading
- The licensee's analysis is conservative compared to the ASCE standard
- The licensee's calculations and the ASCE standard give maximum snow loads that are below the design load for the confinement building roof

WINSTON & STRAWN LLP

*Advisory Committee on Reactor Safeguards*
*561st ACRS Meeting*
*April 2-4, 2009*

# Draft Final Regulatory Guide 1.211, "Qualification of Safety-Related Cables and Field Splices for Nuclear Power Plants"

***Comments of the Nuclear Utility Group on Equipment Qualification***

# Nuclear Utility Group on Equipment Qualification ("NUGEQ")

- ***Formed in 1981 to address issues related to equipment qualification.***
- ***NUGEQ includes utilities operating nuclear power reactors in the United States and Canada.***
- ***NUGEQ represents over 95 operating nuclear power plants in the United States***

William A. Horin – Winston & Strawn, Counsel to NUGEQ
Philip M. Holzman – Strategic Technologies & Resources, Inc., Consultant to NUGEQ

# NRC EQ Task Action Plan (EQ TAP) GSI-168, "Environmental Qualification of Low Voltage Instrumentation and Control Cables"

- NUGEQ actively participated in industry interactions with NRC staff – 1993 to 2003:
- Clear industry support for cable CM research
  - NUMARC comments to NRC, "we believe that research in the area of condition monitoring may be useful toward developing information for assessing the actual service life of equipment." (Reprinted in 1993 workshop proceedings NUREG/CP-0135 (pp. H-3 to H-6))
- Clear NRC staff interest in cable CM
  - 11/15/96 memorandum to the Commission – staff states it would be prudent to have some form of cable CM
- NRC undertook a new cable test program to address six issues.
  - Two of these issues involved cable condition monitoring (CM):
    - Issue 5 – whether condition monitoring methods exist that could be used to monitor the condition of cables in situ, and
    - Issue 6 – whether condition monitoring could be used to predict the accident survivability of cables



WINSTON & STRAWN LLP

# Consideration of Cable Conditioning Monitoring

- October 2000 – testing completed; NRC Staff briefs ACRS on GSI-168
  - Subsequent public meetings and interactions including input on the need for monitoring plant environments and cable CM
- June 2002 – NRC presents GSI-168 proposed resolution to ACRS, including results of CM research and estimates of CM risk benefits



WINSTON & STRAWN LLP

# NRC EQ Task Action Plan (EQ TAP) GSI-168, "Environmental Qualification of Low Voltage Instrumentation and Control Cables"

- NRC Staff Conclusions Regarding Cable Condition Monitoring
  - Methods – No single technique was effective and a combination of techniques would be needed.
  - Risk Benefits – the benefits of reducing cable failure probability to zero [an unrealistic but bounding condition that assumed *perfect* condition monitoring techniques exist] were modest at best.

- ACRS and NRC Conclusion
  - Actual cable condition monitoring benefits, if any, would be even less than modest.

- GSI-168 Contractor Report
  - Condition Monitoring results obtained in laboratory setting
  - Additional testing needed to determine effect of plant conditions on use of techniques in situ



WINSTON & STRAWN LLP

# Regulatory Guide Regarding "Qualification of Safety-Related Cables and Field Splices for Nuclear Power Plants"

- Draft Guide DG-1132
  - NRC concluded some form of cable CM needed to establish reasonable assurance of performance.
  - NRC asserted CM is needed in lieu of "doing nothing"
  - NUGEQ perspective
    - "Doing nothing" is mischaracterization
      - Environmental Monitoring
      - Walkdowns/Inspections
      - Corrective Action Programs
    - Efficacy of CM techniques not supported by the record
      - GSI-168 or subsequent information
    - Risk benefit of CM (even assuming perfect techniques) not supported by the record



WINSTON & STRAWN LLP

# Regulatory Guide Regarding "Qualification of Safety-Related Cables and Field Splices for Nuclear Power Plants"

- NUGEQ Conclusions and Recommendations
  - Environmental Monitoring & walkdowns/inspections are proven & effective (NRC and industry concur).
  - Condition Monitoring can supplement environmental monitoring and walkdowns/inspections when the method is proven and effective for the cable design and conditions of concern.
  - Cable aging management activities should be focused on risk significant cables.
  - Cable aging management activities should be focused on "at risk" cables (those with the least margin).
  - Regulatory Position 7 in Regulatory Guide should be modified to reflect above perspectives.


WINSTON & STRAWN LLP

# Regulatory Guide Regarding "Qualification of Safety-Related Cables and Field Splices for Nuclear Power Plants"

NUGEQ Proposed Language

(7) Programs for monitoring of environmental conditions (such as temperature, radiation levels) coupled with walkdowns to look for visible signs of anomalies attributable to aging with particular emphasis on the identification of localized adverse environments or “hot spots” should be implemented for power, instrumentation, and control cables whose failures could disable risk-significant equipment. Where appropriate these activities should be supplemented with condition monitoring techniques that are proven to be effective for assessing in situ degradation for the cables and conditions of concern. Such activities are most effective when applied to cables with the least margin due to qualification levels, service conditions, or other application considerations. For safety-related power cables, which are inaccessible or installed underground and may be exposed to condensation and wetting, appropriate inspection, testing and monitoring programs should be implemented to detect degradation.

Query: Why is this language unreasonable?



WINSTON & STRAWN LLP

United States Nuclear Regulatory Commission

*Protecting People and the Environment*

# Regulatory Guide 1. 211
# Qualification of Safety-Related Cables and Field Splices

ACRS Meeting: April 2, 2009

Satish Aggarwal
Division of Engineering
Office of Nuclear Regulatory Research
301-251-7627

# Regulatory Guide 1. 211

## BACKGROUND

### Standards Activities:

-IEEE Std 383-1974

-IEEE Std 383-2003 published in June 2004

### Regulatory Activities:

-DG-1132 was issued for public comment in June 2007 with 10 exceptions to IEEE Std 383-2003.

-Received comment letters from 5 organizations.

-Staff met with the ACRS on September 4, 2008.

U.S.NRC
United States Nuclear Regulatory Commission
*Protecting People and the Environment*

# ACRS Concerns and the Staff Responses

ACRS:

1) Provide the definition of risk-significant safety-related equipment (e.g. cable).

Staff:

The terminology “risk significant” safety-related equipment has been removed from the RG. The condition monitoring of the safety-related cables is limited to those covered by the maintenance rule.

U.S.NRC
United States Nuclear Regulatory Commission
*Protecting People and the Environment*

# Regulatory Guide 1.211 (March 2009) C. Regulatory Position (Revised)

(6) Programs for monitoring of environmental conditions (such as temperature, radiation levels), and condition monitoring should be implemented for power, instrumentation, and control cables (***the condition monitoring of safety-related cables may be limited to those cables covered by 10 CFR 50.65, "Requirements for monitoring the effectiveness of maintenance at nuclear power plants.").*** Condition monitoring programs may include any appropriate technique(s), supplemented with walkdowns to look for visible signs of anomalies attributable to aging with particular emphasis on the identification of localized adverse environments or "hot spots." For safety-related power cables that are inaccessible or installed underground, appropriate inspection, testing and monitoring programs should be implemented to detect degradation. The condition monitoring and its frequency may be adjusted based on the cable performance.

U.S.NRC
United States Nuclear Regulatory Commission
*Protecting People and the Environment*

# ACRS Concerns and the Staff Responses

ACRS:

2) Clarification is needed in the scope of the guide which should be limited to safety-related cables.

Staff:

The scope of the guide is limited to only safety-related cables.

U.S.NRC
United States Nuclear Regulatory Commission
*Protecting People and the Environment*

# ACRS Concerns and the Staff Responses

ACRS:

3) The cables under Appendix R (Fire Protection) are not within the scope of the RG.

Staff:

The Appendix R requirements are not covered within this RG, however, they are covered by:

- Regulatory Guide 1.189 “Fire Protection for Nuclear Power Plants”; March 2007; Rev 1.
- NUREG-0800 “Standard Review Plan Sec 9.5.1: Fire Protection System”; October 2003; Rev 4, (Formerly NUREG-75/087 March 1979).
- “Guidelines for Fire Protection for Nuclear Power Plants”; Branch Technical Position ASB 9.5-1; May 1976.
- “Guidelines for Fire Protection for Nuclear Power Plants”; Branch Technical Position ASB 9.5-1; Rev 1; March 1978.
- “Recommended Fire Protection Policy and Program Actions” (GL 85-01); October 26, 1984.
- “NRC Positions on Certain Requirements of Appendix R to 10CFR50” (GL 83-33); October 1983.

U.S.NRC
United States Nuclear Regulatory Commission
*Protecting People and the Environment*

# ACRS Concerns and the Staff Responses

ACRS:

4) Justify the need for testing specialty cables with connectors.

Staff:

This regulatory position was removed from the RG.

U.S.NRC
United States Nuclear Regulatory Commission
*Protecting People and the Environment*

# ACRS Concerns and the Staff Responses

ACRS:

The RG does not offer any specific condition monitoring techniques to assess physical and operational conditions of the cables. The requirement for condition monitoring is being imposed without any conditions monitoring techniques being endorsed by the staff.

Staff:

The condition monitoring of safety-related cables should be implemented. The licensees need to choose the most applicable technique(s) based on the cable type and environment. There are about 14 condition monitoring techniques available.