Summary of Stress Analysis Results for the US-APWR Accumulator

Non-Proprietary Version

March 2009

©2009 Mitsubishi Heavy Industries, Ltd.

All Rights Reserved

Prepared:

Engineer Component Designing Section Nuclear Plant Component Designing Department	Date

Reviewed:

Acting Manager Component Designing Section Nuclear Plant Component Designing Department	Date

Approved:

Manager Component Designing Section Nuclear Plant Component Designing Department	Date

Approved:

Deputy Manager Nuclear Plant Component Designing Department	Date

Approved:

Manager Nuclear Plant Component Designing Department	Date

Revision History

Revision	Page	Description
0	All	Original Issue

© 2009

MITSUBISHI HEAVY INDUSTRIES, LTD.

All Rights Reserved

This document has been prepared by Mitsubishi Heavy Industries, Ltd. ("MHI") in connection with the U.S. Nuclear Regulatory Commission's ("NRC") licensing review of MHI's US-APWR nuclear power plant design. No right to disclose, use or copy any of the information in this document, other than by the NRC and its contractors in support of the licensing review of the US-APWR, is authorized without the express written permission of MHI.

This document contains technology information and intellectual property relating to the US-APWR and it is delivered to the NRC on the express condition that it not be disclosed, copied or reproduced in whole or in part, or used for the benefit of anyone other than MHI without the express written permission of MHI, except as set forth in the previous paragraph.

This document is protected by the laws of Japan, U.S. copyright law, international treaties and conventions, and the applicable laws of any country where it is being used.

MITSUBISHI HEAVY INDUSTRIES, LTD.
16-5, Konan 2-chome, Minato-ku
Tokyo 108-8215 Japan

Abstract

This report contains a summary of the structural evaluation of the three Accumulator (ACC) parts is based on the discuss about evaluation points.

The evaluations performed were based on the loading conditions defined in the US-APWR Accumulator ASME Design Specification (Reference 4) and on the procedures of ASME Boiler & Pressure Vessel Code up to and including the 2003 addenda, referred to as the ASME Code of Reference, Section III (Reference 1).

The analyses and results presented demonstrate that the ACC satisfies all of the applicable structural limits of the ASME Code of Reference.

Table of Contents

1.0 INTRODUCTION 1-1

2.0 SUMMARY OF RESULTS 2-1

3.0 CONCLUSIONS 3-1

4.0 NOMENCLATURE 4-1

5.0 ASSUMPTIONS AND OPEN ITEMS 5-1

5.1 ASSUMPTIONS 5-1

5.2 OPEN ITEMS 5-1

6.0 ACCEPTANCE CRITERIA 6-1

7.0 DESIGN INPUT 7-1

7.1 GEOMETRY 7-1

7.2 MATERIAL 7-1

7.3 LOADS, LOAD COMBINATIONS, AND TRANSIENTS 7-2

7.3.1 Pressure Loads and Temperature 7-2

7.3.2 External Mechanical Loads 7-2

7.3.3 Load Combinations 7-3

7.3.4 Thermal and Pressure Transient Loads 7-4

8.0 METHODOLOGY 8-1

8.1 HEAT TRANSFER COEFFICIENTS AND THERMAL ANALYSIS 8-1

8.2 STRESS ANALYSIS 8-1

8.3 FATIGUE ANALYSIS MODEL AND METHOD 8-2

9.0 STRUCTURAL ANALYSIS RESULTS 9-1

9.1 SHELLS & HEADS 9-2

9.1.1 Dimensions 9-2

9.1.2 Analysis Summary 9-3

9.1.3 Stress Results 9-3

9.2 SUPPORT SKIRT 9-4

9.2.1 Dimensions 9-4

9.2.2 Analytical Method 9-4

9.2.3 Stress Results 9-4

9.3 SUPPORT SKIRT ANCHOR BOLTS 9-5

9.3.1 Dimensions 9-5

9.3.2 Method of Analysis 9-6

9.3.3 Stress Results 9-6

10.0 FRACTURE MECHANICS ASSESSMENT 10-1

11.0 REFERENCES 11-1

List of Tables

Table2-1	Summary of Most Limiting Results	2-1
Table 6-1	Class 2 Component NC-3321-1 Stress Limits (other than bolts & skirt)	6-1
Table 6-2	Class 2 Support Stress Limits	6-2
Table 7-1	Accumulator Basic Design Drawing List	7-1
Table 7-2	Materials of Construction	7-1
Table 7-3	Material Properties for	7-1
Table 7-4	Material Properties for	7-2
Table 7-5	Pressures and Temperatures	7-2
Table 7-6	Load Combinations	7-3
Table 7-7	Accumulator Design Transients	7-4
Table 8-1	NC-3219.2 Fatigue Assessment	8-1
Table 9-1	Shell & Heads Result Summary	9-2
Table 9-2	Skirt Result Summary	9-4
Table 9-3	Anchor Bolts Result Summary	9-6

List of Figures

Figure 2-1	Accumulator Evaluated Parts	2-1
Figure 8-1	Stress Evaluation Process	8-2
Figure 9-1	Shell & Head Dimensions	9-1
Figure 9-2	Anchor Bolt Dimensions	9-5

List of Acronyms

The following list defines the acronyms used in this document.

ACC	Accumulator
SSE	Safe Shutdown Earthquake
RCP	Reactor Coolant Pump
RCS	Reactor Coolant System
LOCA	Loss-of-Coolant Accident
FSRF	Fatigue Strength Reduction Factor
RT	Radiographic Examination
SRSS	Square-Root-Of-The-Sum-Of-The-Squares
SLB	Steam Line Break

1.0 INTRODUCTION

This Technical Report provides a summary of the stress analysis results for the US-APWR Accumulator (ACC) consistent with MHI's commitment letter (Reference 6). The content of this report follows the ASME guidelines for Design Reports (Section III Division 1 Appendix C).

This report provides structural evaluations for three ACC parts listed in Table 2-1 and shown in Figure 2-1.

The results of the detailed stress analyses summarized in this report demonstrate that the three parts of the ACC that were evaluated satisfy all of the applicable structural limits of the Design Specification (Reference 4) and the 2001 Edition of Section III of the ASME Boiler & Pressure Vessel Code up to and including the 2003 addenda, referred to herein as the ASME Code of Reference, (Reference 1).

2.0 SUMMARY OF RESULTS

The three evaluated parts of the ACC are shown in Figure 2-1. The structural analysis results for each of these parts are listed in Section 9. The most limiting results in each evaluation are listed in Table 2-1 below.

Table 2-1 Summary of Most Limiting Results

Section	Evaluated Part	Max Stress / Allowable Ratio[1]	Highest Fatigue[2] Usage Factor
9.1	Shells & Heads		
9.2	Support Skirt		
9.3	Support Skirt Bolts		

Note-1: The allowable ratio is the “ratio” of the calculated stress intensity to the allowable stress intensity. Therefore, any ratio less than or equal to 1.0 is acceptable.

$$\text{Ratio} = \frac{\text{Calculated Stress Intensity}}{\text{Allowable Stress Intensity}} \text{ or } \text{Ratio} = \frac{\text{Required Thickness}}{\text{Nominal Thickness}}$$

Note-2: The fatigue calculations performed in this report meet the requirements of the ASME code. Environmental fatigue per RG 1.207 is not applicable to this Class 2 component.

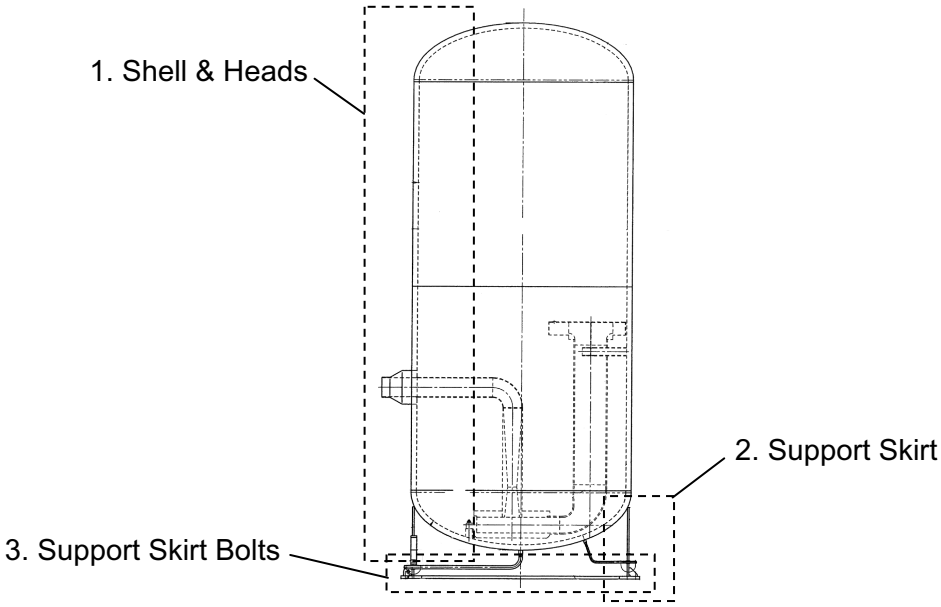

Figure 2-1 Accumulator Evaluated Parts

3.0 CONCLUSIONS

The US-APWR ACC is designed to the requirements of the ASME Boiler and Pressure Vessel Code, 2001 Edition up to and including the 2003 Addenda for the Design, Service Loadings, Operating Conditions, and Test Conditions as specified in the Design Specification (Reference 4).

The results summarized in this report and a review of the component design drawings, demonstrate that the US-APWR ACC satisfies all of the requirements of the Design Specification (Reference 4) for structural integrity.

4.0 NOMENCLATURE

Symbol	Unit	Definition
P_m	ksi	General Primary Membrane Stress
P_b	ksi	Primary Bending Stress
S	ksi	Design Stress Intensity
Sy	ksi	Yield Stress
S_u	ksi	Tensile Strength
S_t	ksi	Averaged Stress for Bolt (neglecting stress concentration)
$S_t + S_b$	ksi	Tension plus Bending Stress for Bolt (neglecting stress concentration)
P	-	Design Pressure
1/3 SSE	-	Design Condition & Level B Service Loading Earthquake (i.e. OBE)
SSE	-	Safe Shutdown Earthquake

5.0 ASSUMPTIONS AND OPEN ITEMS

5.1 Assumptions

The basic modeling assumptions from the detailed analyses were as follows:

1. The inside diameter was taken as the drawing nominal value of the cladding per NC-3122.2(a)
2. The wall thickness was the drawing nominal value
3. The corrosion allowance was considered to be zero
4. The anchor bolt diameter was reduced by 0.25-inches to account for potential degradation over time (i.e. corrosion allowance).

5.2 Open Items

There are no open items in this Technical Report.

6.0 ACCEPTANCE CRITERIA

The stress intensity acceptance criteria for Class 2 components are specified in NC-3220. Table 6-1 lists the stress limits for the shell, Table 6-2 lists the stress limits for the skirt, and Table 6-3 lists the stress limits for the bolts.

Table 6-1 Class 2 Component NC-3321-1 Stress Limits (other than bolts & skirt)

Condition	Stress Category	Stress Limits	Remarks
Design	σ_m	S	NC-3221
	$(\sigma_m$ or $\sigma_L) + \sigma_b$	1.5 S	NC-3221
Test	P_m	0.9 Sy	NC-3218
	$P_m + P_b$	1.35 Sy for Pm $\leq$ 0.67 Sy (2.15 Sy – 1.2 Pm) for 0.67 Sy < Pm $\leq$ 0.9 αSy	NC-3218

Note-1 For the ACC the Design Condition stress limits are used for the Level D SSE loading and the Design Pressure. These conditions are bounding for Levels A, B, C & D, all of which have higher stress allowable limits.

The building foundation anchor bolts used to hold the ACC in place are outside the ACC jurisdictional boundary. However, the anchor bolt stresses were identified in reference 12 as an item to be evaluated in this report.

The rules of NF-3324.6 were used for a simplified analysis applying the Level D SSE loading to the ACC. This analysis is bounding for the Design, Levels A, B, C, D and Test Conditions.

Maximum bolt tensile stress $\leq$ Su/2

Maximum bolt shear stress $\leq$ 0.62 Su/3

Maximum sum of bolt tensile & shear stress must satisfy the following relationship…

$[\text{max tensile stress} / (Su/2)]^2 + [\text{max shear stress} / (0.62/ Su/3)]^2 < 1.0$

Table 6-2 Class 2 Support Stress Limits

Condition	Stress Category	Stress Limits	Remarks
Design	P_m	S_m	NF-3221.1
	$P_m + P_b$	$1.5\ S_m$	NF-3221.1
Level D	P_m	Min [Max (1.2 Sy, 1.5 Sm), 0.7 Su]	NF- 3332.1
	$P_m + P_b$	1.5 Min [Max (1.2 Sy, 1.5 Sm), 0.7 Su]	NF- 3332.2
Test	P_m	$1.33\ S_m$	NF-3221.3
	$P_m + P_b$	$1.33\ (1.5\ S_m)$	NF-3221.3

7.0 DESIGN INPUT

7.1 Geometry

The ACC basic drawings used to supply dimensions for the stress analysis are listed in Table 7-1. Figures describing the detailed geometry and dimensions of the parts evaluated are provided in Section 9.

Table 7-1 Accumulator Basic Design Drawing List

No.	Drawing Title	Reference Number
1	The Drawing for Stress Analysis	N0-F000001

7.2 Material

The materials of construction for the ACC parts are listed in Table 7-2.

Table 7-2 Materials of Construction

Part or Assembly	Material
Shell Plates & Heads	
Support Skirt	
Foundation Anchor Bolts	

The material strength properties used in the stress analyses were obtained from ASME Section II, Part D, Subpart 1 Tables 1A, 1B and 3.

Table 7-3 Material Properties for

Temperature, °F	S	Sy	Su
70			
100			
200			
300			

Table 7-4 Material Properties for

Temperature, °F	S	Sy	Su
<100			
200			

7.3 Loads, Load Combinations, and Transients

The loads, load combinations, and transients are defined in the Design Specification. The following is a summary of those used for the accumulator structural evaluations.

7.3.1 Pressure Loads and Temperature

Table 7-5 Pressures and Temperatures

Parameter	Value
Design pressure	715 psia (700 psig)
Design temperature	300°F
Normal operating pressure	640 psig
Normal operating temperature	Ambient (70 °F to 120 °F)
Hydrostatic test pressure	1065psia (1050 psig)
Minimum hydrostatic test temperature	70°F

7.3.2 External Mechanical Loads

The external loads are dead weight and seismic acceleration. The maximum, flooded weight of the ACC is klb.

7.3.3 Load Combinations

The accumulator has no thermal or pressure transient loads, no thermal expansion loads, and no accident loadings. The loads combinations considered in the analysis are listed in the Table below.

Table 7-6 Load Combinations

Design	• Design Pressure (700 psig) • Dead weight
Level A	• Full power operating pressure • Dead weight
Level B	• Maximum operating pressure • Dead weight • ± 1/3 SSE Loads
Level C	• Maximum operating pressure • Dead weight
Level D	• Maximum operating pressure • Dead weight • ± SSE
Test	• Dead weight • Hydrostatic test pressure (1050 psig)

7.3.4 Thermal and Pressure Transient Loads

The design transients are listed in the Table below. These transients were determined based on a 60-year plant operating period. Although each transient has a plant operating condition associated with it, for the accumulator the Level B, C and D plant condition transients were treated as Design Conditions.

Table 7-7 Accumulator Design Transients

Mark	Transient	Occurrence	Remark
Test Conditions			
1-1	a) Hydrostatic pressure test	10	1050 psid, 120°F
1-2	b) Injection test	5	120°F
1-3	c) Check valve operation test	60	440 psid to 400 psid
Design Conditions			
2	In leak of primary water at full power (Plant: Level B)	10	120°F
3	Out leak of N_2 gas at full power (Plant: Level B)	720	695 → 586 psid, 120 °F
4	Large loss of coolant accident (Plant: Level D)	1	300 °F
5	Small loss of coolant accident (Plant: Level C)	10	300 °F
6	Pressurization / depressurization events	120	640 psid normal operational pressure cycle for taking unit

Because these loading conditions are so low, this Technical Report evaluates the hydrostatic test pressure and the Level D SSE acceleration and compares them to design condition allowable limits.

8.0 METHODOLOGY

The ACC was treated as a Class 2 storage tank. This component functions when large flow injection is needed to refill the reactor vessel (i.e. during the postulated LOCA event) and is subject only to the loads identified in Table 7.6. Hand calculations were used to determine the structural acceptability of this component.

8.1 Heat Transfer Coefficients and Thermal Analysis

The ACC operating temperature is ~120°F (always less than the 300°F Design Temp) and there are no significant thermal transients.

8.2 Stress Analysis

Classical structural equations were used to calculate the pressure boundary stresses, the support skirt stresses, and the support skirt anchor bolt stresses.

Detailed assumptions associated with the stress analysis are documented in the detailed calculations.

8.3 Fatigue Analysis Model and Method

Table 8-1 NC-3219.2 Fatigue Assessment

	NC-3219.2 Condition B Criteria	Accumulator Evaluation

9.0 STRUCTURAL ANALYSIS RESULTS

The results of the stress analysis are conservative. It is expected that the resulting stress values would have been lower if more detailed calculations had been performed, but since the results of the analyses all met the ASME Code allowable limits, further analyses were not necessary.

9.1 Shells & Heads

9.1.1 Dimensions

Figure 9.1 Shell, Head and Skirt Dimensions

9.1.2 Analysis Summary

(a) Shell Thickness

Thickness of Shell under Internal Pressure (NC-3224.3)

$$t = \frac{PR}{S - 0.5P}$$

Thickness of Shell under External Pressure (NC-3224.6)

$$t = \frac{D}{S}\left(e^{P/S} - 1\right)$$

(b) Head Thickness

Thickness of Head with Pressure on Concave Side (NC-3242)

$$Pa = \frac{4B}{3\left(Do/T\right)}$$

Thickness of Head with Pressure on Convex Side (NC-3242)

$$Pa = \frac{B}{R/T}$$

(c) Reinforcement for opening in shell and head (NC-3230)

Comparison between required area and effective area for reinforcement

9.1.3 Stress Results

The calculated stress-to-allowable ratio (calculated stress divided by allowable value) results for the most limiting locations are summarized in the Table below.

Table 9-1 Shell & Heads Result Summary

Condition	Part	Stress-to-Allowable Ratio Calculated by Thickness
Design		

9.2 Support Skirt

9.2.1 Dimensions

Dimensions are shown in Figure9.1.

9.2.2 Analytical Method

Compression stress is obtained by consideration the vertical load by Acc. weight. Comparison the compression stress and allowable stress obtained by ASME NF-3000.

9.2.3 Stress Results

The calculated stress-to-allowable ratio (calculated stress divided by allowable value) results for the most limiting locations are summarized in the Table below.

Table 9-2 Skirt Result Summary

Condition	Part	Stress-to-Allowable Ratio
		Buckling Evaluation
Design (bounding SSE loading used)		
Test (hydrostatic test pressure)		

9.3 Support Skirt Anchor Bolts

9.3.1 Dimensions

Figure 9.2 Anchor Bolt Dimensions

9.3.2 Method of Analysis

Calculation method of anchor bolts stress is following process. This method is based on typical formulas Strength of Materials.

(a) Calculate the moment, horizontal force and vertical force at Acc bottom level.

(b) Anchor bolts tensile stress is obtained by load combination of moment and vertical force at Acc. bottom level.

Consider loads at Acc base and displacement balance of anchor bolt and base concrete, and anchor bolt tensile load and base concrete compression load is calculated.

(c) Anchor bolts shear stress is obtained by horizontal force at Acc bottom level.

9.3.3 Stress Results

The calculated stress-to-allowable ratio (calculated stress divided by allowable value) results for the most limiting locations are summarized in below.

Results are based on use of a corrosion allowance of 0.25” on the diameter. So the analyzed bolt diameter was .

Table 9-3 Anchor Bolts Result Summary

Condition	Stress	Stress-to-Allowable Ratio
Design	Tensile stress	
	Shear stress	
	Tensile + shear	

10.0 FRACTURE MECHANICS ASSESSMENT

A detailed fracture mechanics assessment of the ACC was not performed because the ACC operating conditions are such that there is no risk of brittle fracture.

11.0 REFERENCES

1. ASME Boiler and Pressure Vessel Code, Section III, Nuclear Power Plant Components, 2001 Edition through 2003 Addenda
2. ASME Boiler and Pressure Vessel Code, Section II Material Specification, 2001 Edition through 2003 Addenda
3. N0-FB10L01 Rev.0, “US-APWR General ASME Design Specification for Class 1 and CS Components”
4. N0-F000L01, Rev.0, “US-APWR Accumulator ASME Design Specification”
5. “Manual of Steel Construction”, Eighth Edition, American Institute of Steel Construction Inc.
6. “Additional Information for Design Completion Plan of US-APWR Piping and Components” UAP-HF-08123