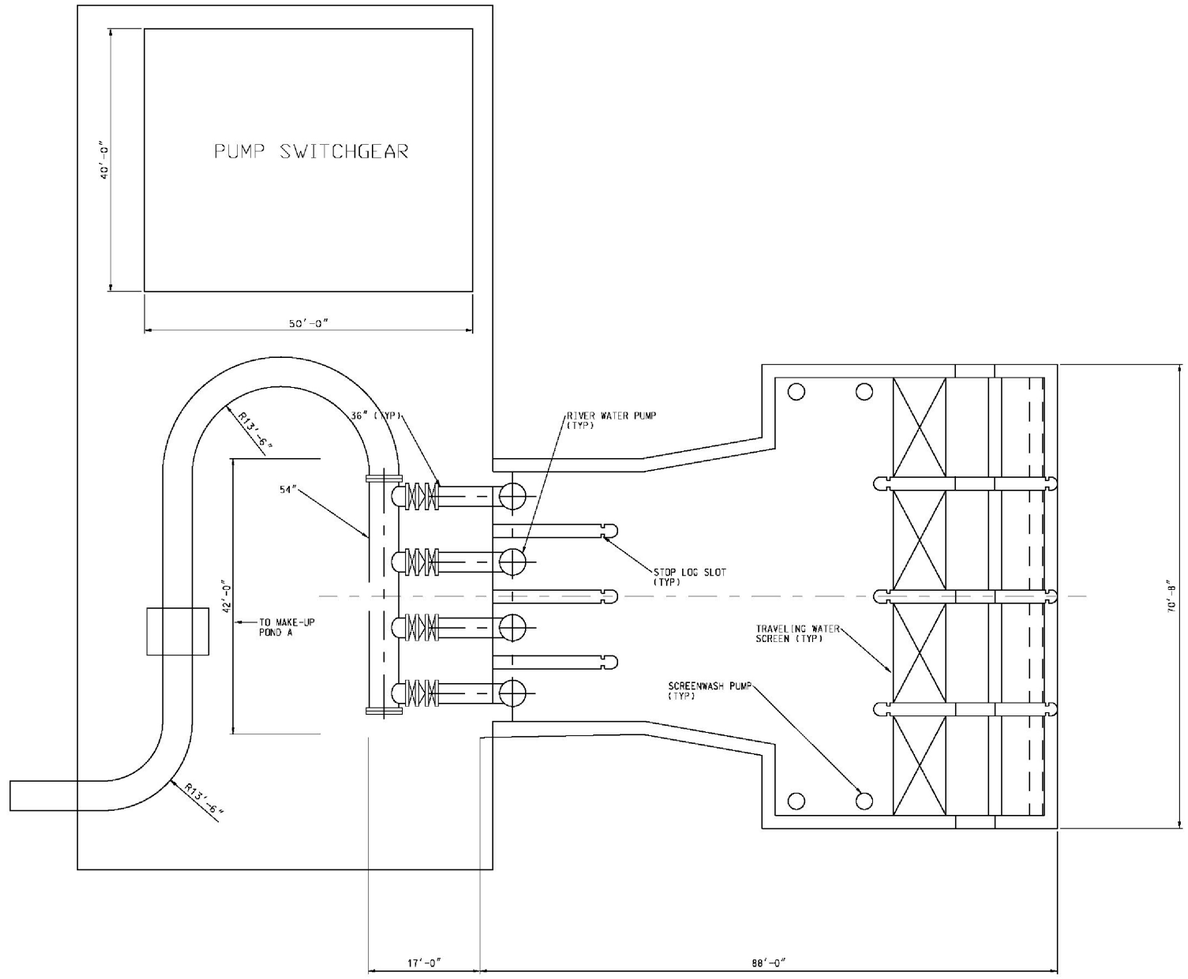

PLAN

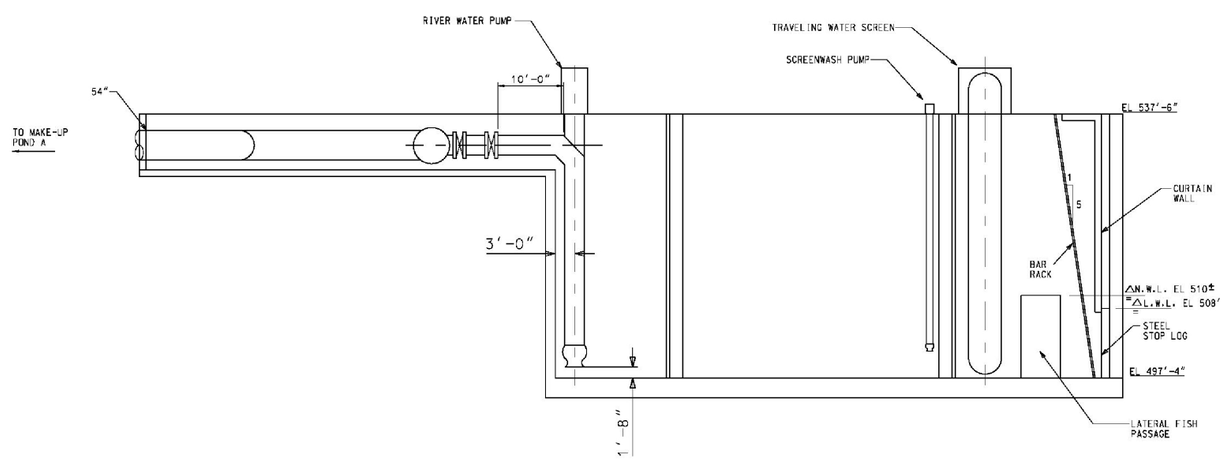

PROFILE

PRELIMINARY

WILLIAM STATES LEE III
NUCLEAR STATION UNITS 1 & 2

River Water Intake Structure

FIGURE 5.3-1 Rev 0