Rancho Seco

Final Status Survey Summary Report

November 10, 2008

Reactor Building Drains

Survey Unit F8990401

Prepared By: Eric L. Brown **Date:** 11/10/2008
FSS Engineer

Reviewed By: RF Deuber **Date:** 11/16/08
Lead FSS Engineer

Approved By: E.T. B **Date:** 2-27-09
Dismantlement Superintendent, Radiological

FINAL STATUS SURVEY SUMMARY REPORT

Survey Unit:

F8990401, Reactor Building Drains

Survey Unit Description:

Operating History: This system provided an alternate pathway for delivering feed water to the steam generators. This system was reported to have been contaminated as a result of steam generator primary to secondary tube leaks. Operating records and the HSA document occurrences of radioactive contamination associated with this system piping.

Survey Unit Design Information:

The Survey Unit Design Parameters are presented in Table 1 below. The survey unit and measurement locations are depicted on the maps in Attachment 1. Direct measurement locations were spaced at 15cm intervals and 12 m^2 were scanned for 100% coverage. The instrumentation used for the survey along with the MDC values are listed in Tables 2-1 and 2-2 in Attachment 2.

Table 1. Survey Unit Design Parameters

Survey Design Parameter	Value	Comment
Survey Area:	F899	Reactor Building Drains
Survey Unit:	0401	Structure Surface
Class:	1	LTP Table 5-4
SU Area (m^2)**:**	12	
Evaluator:	Erin L. Brown	
DCGL (dpm/100 cm^2)**:**	100000	Gross Activity DCGL
Area Factor:	1	Class 1
Design DCGLemc (dpm/100 cm^2)**:**	100000	Class 1
LBGR (dpm/100 cm^2)**:**	50000	Default = 50% DCGL
Design Sigma (dpm/100 cm^2)**:**	100000	
Type I Error:	0.05	
Type II Error:	0.05	
Predominant Nuclide:	Cs-137	
Sample Area (m^2)**:**	N/A	Embedded Pipe
Scan Area (m^2)**:**	12	
Scan Coverage (%):	100%	Class 1
$Z_{1-\alpha}$ **:**	1.645	
$Z_{1-\beta}$ **:**	1.645	
Sign P:	0.691462	
Calculated Relative Shift:	0.5	
Relative Shift Used:	0.5	Uses 3.0 if Relative Shift is >3
N-Value:	74	
Design N-Value + 20%:	89	NUREG-1575 Table 5-5
Design Min Samples N:	89	Class 1
Grid Spacing L:	0.3	Class 1

Survey Results:

A total of 203 direct measurements were made in F8990401. The results including mean, median, standard deviation and range are shown in Table 2. All direct measurements were less than the DCGL. None of the measurements indicated areas of elevated activity. Survey activity ranged from 1757 to 19144 dpm/100 cm², based on the pipe detector efficiency.

Table 2. Direct Measurement Results

Measurement ID	Gross Activity (dpm/100 cm^2)
F8990401-M0001GI	19144
F8990401-M0002GI	18081
F8990401-M0003GI	13937
F8990401-M0004GI	15624
F8990401-M0005GI	11099
F8990401-M0006GI	9676
F8990401-M0007GI	7753
F8990401-M0008GI	6938
F8990401-M0009GI	4896
F8990401-M0010GI	3710
F8990401-M0011GI	5729
F8990401-M0012GI	8753
F8990401-M0013GI	5285
F8990401-M0014GI	4315
F8990401-M0015GI	3865
F8990401-M0016GI	3928
F8990401-M0017GI	4047
F8990401-M0018GI	4918
F8990401-M0019GI	4121
F8990401-M0020GI	3913
F8990401-M0021GI	4762
F8990401-M0022GI	5206
F8990401-M0023GI	4458
F8990401-M0024GI	3841
F8990401-M0025GI	3822
F8990401-M0026GI	3447
F8990401-M0027GI	3337
F8990401-M0028GI	3260
F8990401-M0029GI	3785
F8990401-M0030GI	3709
F8990401-M0031GI	3360
F8990401-M0032GI	3024
F8990401-M0033GI	3312
F8990401-M0034GI	3371
F8990401-M0035GI	3488
F8990401-M0036GI	3147
F8990401-M0037GI	3025
F8990401-M0038GI	3186
F8990401-M0039GI	3282
F8990401-M0040GI	3255

F8990401-M0041GI	3451
F8990401-M0042GI	3506
F8990401-M0043GI	3858
F8990401-M0044GI	4348
F8990401-M0045GI	4835
F8990401-M0046GI	4741
F8990401-M0047GI	4216
F8990401-M0048GI	3941
F8990401-M0049GI	3685
F8990401-M0050GI	3825
F8990401-M0051GI	4395
F8990401-M0052GI	4353
F8990401-M0053GI	5091
F8990401-M0054GI	4966
F8990401-M0055GI	5756
F8990401-M0056GI	6814
F8990401-M0057GI	8685
F8990401-M0058GI	8395
F8990401-M0059GI	6928
F8990401-M0060GI	5871
F8990401-M0061GI	6857
F8990401-M0062GI	6794
F8990401-M0063GI	7228
F8990401-M0064GI	7057
F8990401-M0065GI	7329
F8990401-M0066GI	6698
F8990401-M0067GI	6213
F8990401-M0068GI	5863
F8990401-M0069GI	4452
F8990401-M0070GI	3802
F8990401-M0071GI	3426
F8990401-M0072GI	4505
F8990401-M0073GI	5254
F8990401-M0074GI	6081
F8990401-M0075GI	6454
F8990401-M0076GI	7253
F8990401-M0077GI	7555
F8990401-M0078GI	8107
F8990401-M0079GI	8157
F8990401-M0080GI	7131
F8990401-M0081GI	5777
F8990401-M0082GI	6731
F8990401-M0083GI	9428
F8990401-M0084GI	10379
F8990401-M0085GI	9122
F8990401-M0086GI	9231
F8990401-M0087GI	10492
F8990401-M0088GI	9031
F8990401-M0089GI	7449
F8990401-M0090GI	6772
F8990401-M0091GI	5854
F8990401-M0092GI	4853
F8990401-M0093GI	5682
F8990401-M0094GI	7363
F8990401-M0095GI	8469
F8990401-M0096GI	7609

F8990401-M0097GI	7331
F8990401-M0098GI	7900
F8990401-M0099GI	8100
F8990401-M0100GI	10649
F8990401-M0101GI	14694
F8990401-M0102GI	17950
F8990401-M0103GI	16001
F8990401-M0112GI	2633
F8990401-M0113GI	2804
F8990401-M0114GI	2817
F8990401-M0115GI	3123
F8990401-M0116GI	4260
F8990401-M0117GI	3860
F8990401-M0118GI	2970
F8990401-M0119GI	2680
F8990401-M0120GI	2389
F8990401-M0121GI	2336
F8990401-M0122GI	2256
F8990401-M0123GI	2208
F8990401-M0124GI	2212
F8990401-M0125GI	2191
F8990401-M0126GI	2121
F8990401-M0127GI	2116
F8990401-M0128GI	2124
F8990401-M0129GI	2078
F8990401-M0130GI	1983
F8990401-M0131GI	2141
F8990401-M0132GI	2177
F8990401-M0133GI	2150
F8990401-M0134GI	2184
F8990401-M0135GI	2257
F8990401-M0136GI	2294
F8990401-M0137GI	2359
F8990401-M0138GI	2439
F8990401-M0139GI	2516
F8990401-M0140GI	2714
F8990401-M0141GI	2867
F8990401-M0142GI	2320
F8990401-M0143GI	2234
F8990401-M0144GI	2141
F8990401-M0145GI	2093
F8990401-M0146GI	2128
F8990401-M0147GI	2162
F8990401-M0148GI	2200
F8990401-M0149GI	2225
F8990401-M0150GI	2267
F8990401-M0151GI	2129
F8990401-M0152GI	2227
F8990401-M0153GI	2172
F8990401-M0154GI	2150
F8990401-M0155GI	2251
F8990401-M0156GI	2313
F8990401-M0157GI	2353
F8990401-M0158GI	2345
F8990401-M0159GI	2245
F8990401-M0160GI	2194

F8990401-M0161GI	2238
F8990401-M0162GI	2237
F8990401-M0163GI	2168
F8990401-M0164GI	2264
F8990401-M0165GI	2228
F8990401-M0166GI	2207
F8990401-M0167GI	2174
F8990401-M0168GI	2068
F8990401-M0169GI	2066
F8990401-M0170GI	2178
F8990401-M0171GI	2178
F8990401-M0172GI	2176
F8990401-M0173GI	2176
F8990401-M0174GI	2198
F8990401-M0175GI	2170
F8990401-M0176GI	2259
F8990401-M0177GI	2260
F8990401-M0178GI	2609
F8990401-M0179GI	2410
F8990401-M0180GI	2251
F8990401-M0181GI	2337
F8990401-M0182GI	2281
F8990401-M0183GI	2291
F8990401-M0184GI	2410
F8990401-M0185GI	2084
F8990401-M0186GI	2338
F8990401-M0187GI	2360
F8990401-M0188GI	3382
F8990401-M0189GI	3073
F8990401-M0190GI	2527
F8990401-M0191GI	2355
F8990401-M0192GI	2510
F8990401-M0193GI	2612
F8990401-M0194GI	2494
F8990401-M0195GI	2413
F8990401-M0196GI	2341
F8990401-M0197GI	2195
F8990401-M0198GI	2107
F8990401-M0199GI	1999
F8990401-M0200GI	2081
F8990401-M0201GI	2067
F8990401-M0202GI	2070
F8990401-M0203GI	2036
F8990401-M0204GI	2096
F8990401-M0205GI	2053
F8990401-M0206GI	2057
F8990401-M0207GI	1994
F8990401-M0208GI	2022
F8990401-M0209GI	2054
F8990401-M0210GI	1788
F8990401-M0211GI	1757
Mean:	4427
Median:	3255
Standard Deviation:	3215
Range:	1757 - 19144

Survey Unit Data Assessment:

The survey design required 203 direct measurements for the Sign Test. The critical value and the results of the Sign Test are presented in Table 4. The sample mean and median values were less than the DCGL. The sample standard deviation was less than the design standard deviation so no additional samples were required.

Table 4. Data Assessment Results

Survey Results Parameter	Value	Comment
Material Background Used (dpm/100 cm^2):	N/A	
Ambient Background Used (dpm/100 cm^2):	N/A	Average Ambient BKG = 0
Actual Direct Measurements (N):	203	
Median (dpm/100 cm^2):	3255	
Mean (dpm/100 cm^2):	4427	
Direct Measurement Standard Deviation (dpm/100 cm^2):	3215	
Total Standard Deviation (dpm/100 cm^2):	3215	Based on samples and backgrounds.
Maximum (dpm/100 cm^2):	19144	
Material Type:	N/A	Background Subtract Not Applied
Sign Test Final N Value:	203	
S+ Value:	203	
Critical Value:	113	
Sufficient Samples Collected:	Yes	
Maximum Value < DCGL:	Yes	
Median Value < DCGL:	Yes	
Mean Value < DCGL:	Yes	
Maximum Value < DCGLemc:	Yes	Class 1
Total Standard Deviation <= Sigma:	Yes	
Pass the Sign Test?	Yes	
Reject the Null Hypothesis?	Yes	
Does the Survey Unit Pass All Criteria?	Yes	

Survey Unit Investigations and Results:

No investigations were required and no investigation results are reported.

ALARA Statement:

As stated in Chapter 4 of the LTP, as long as the residual activity within the survey unit is less than the DCGL (i.e. the survey unit average activity is less than the DCGL and the EMC criterion has been met), the ALARA criterion has been met.

Changes in Initial Survey Unit Assumptions:

The survey unit was designed as a Class 1 structure survey and the sample results are consistent with that classification. The variability of the survey results was less than the characterization data used for survey design. No potential areas of elevated activity were detected.

Conclusion:

The FSS of this survey unit was properly designed as a Class 1 survey based on Table 5-4 of the LTP. The required number of direct measurements was made and the scan coverage met the requirement of the LTP for pipe surveys. No direct measurements exceeded the DCGL of 100000 dpm/100 cm^2. No investigations were required.

The direct measurement data support rejection of the null hypothesis, providing high confidence that the survey unit satisfied the release criteria and that the data quality objectives were met.

It is concluded that survey unit F8990401 meets the release criteria of 10CFR20.1402.

Attachment 1

Maps

November 10, 2008

Survey Unit F8990401

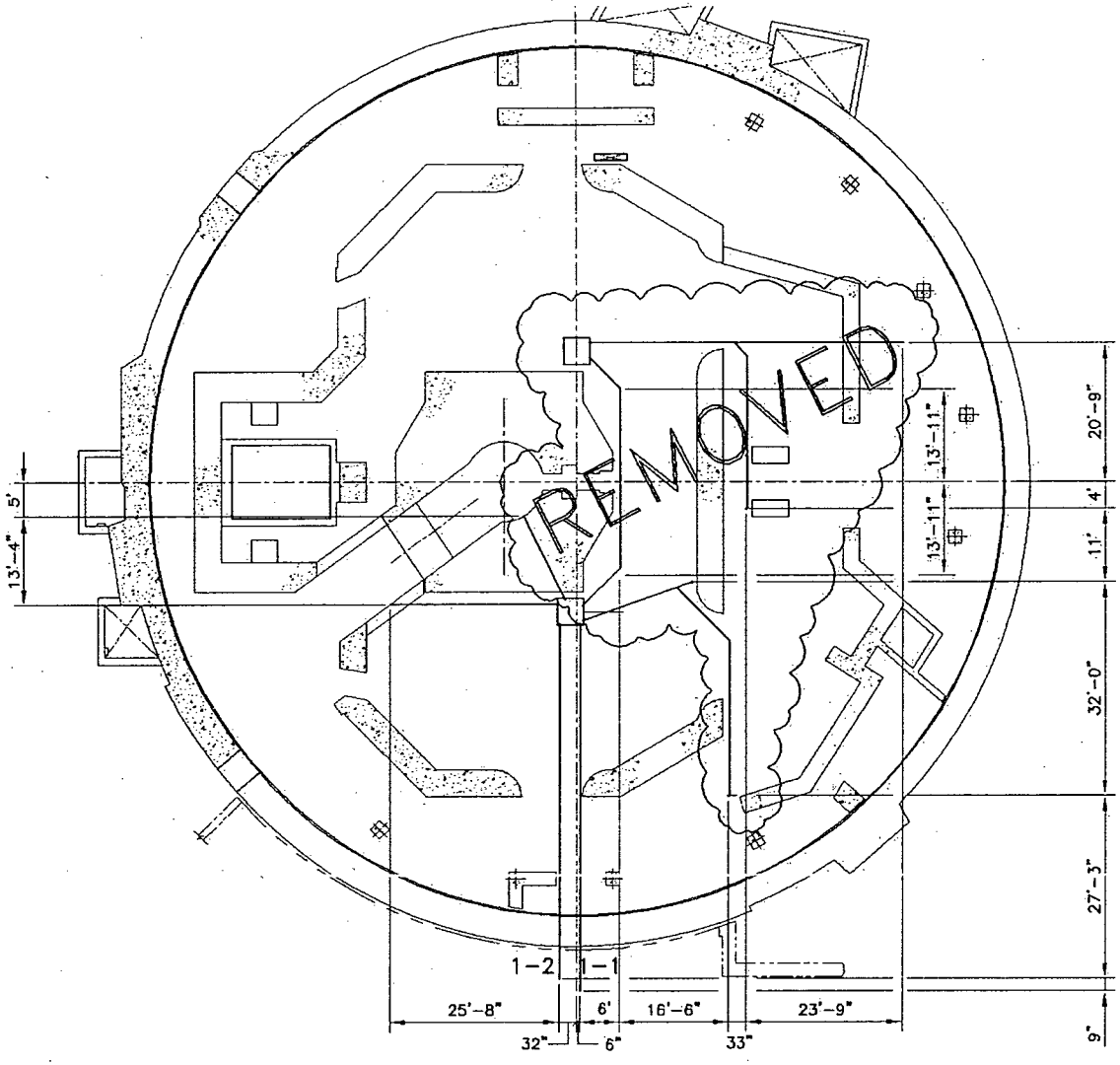

PLAN VIEW EL. -25'-0"

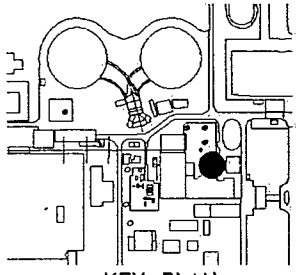

KEY PLAN

0 1 2 3 4 5
SCALE
METERS

N

SMUD
SACRAMENTO MUNICIPAL
UTILITY DISTRICT

REACTOR BUILDING EL. -25'
FLOOR DRAIN PIPING

F8990401-M1

FILE: F899040 SHEET 1 OF 1 RC RAYMOND

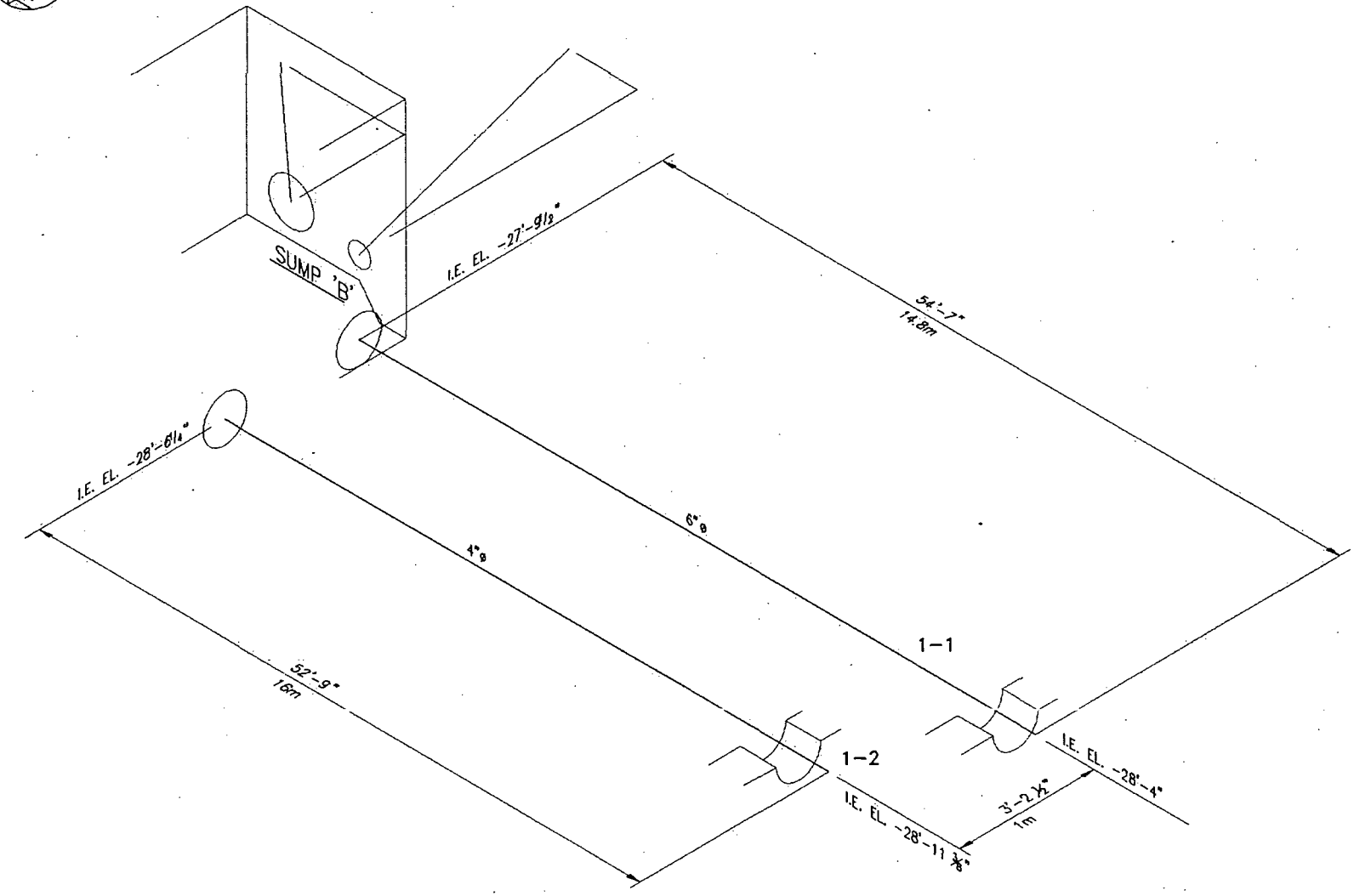

PIPING SUMMARY

SIZE	LENGTH	AREA
4"ø	55 LF	5.5 SM
6"ø	55 LF	8.5 SM

SMUD
SACRAMENTO MUNICIPAL UTILITY DISTRICT

REACTOR BUILDING EL. -25'
SUMP B DISCHARGE
F8990401-M2

FILE: F899040 SHEET 1 OF 1 RC RAYMOND

Attachment 2

Instrumentation

November 10, 2008

Survey Unit F8990401

Table 2-1. Survey Unit Instrumentation

Instrument Model; Serial No.	Detector Model; Serial No.	MDC Static (dpm/100 cm²)	MDC Scan (dpm/100 cm²)
M2350; 142512	44-157; 215958	1750	N/A

The MDC noted for the detector model 44-157 is for the 4" diameter piping which is the most conservative for the survey performed.

Table 2-2. Investigation Criteria and DCGL

Parameter	Value (dpm/100 cm^2)
Investigation Criteria - Direct	100000
Investigation Criteria – Scan	N/A
$DCGL_W$	100000
$DCGL_{EMC}$	N/A

Attachment 3

Investigation

November 10, 2008

Survey Unit F8990401

(none required)

Attachment 4

Data Assessment

November 10, 2008

Survey Unit F8990401

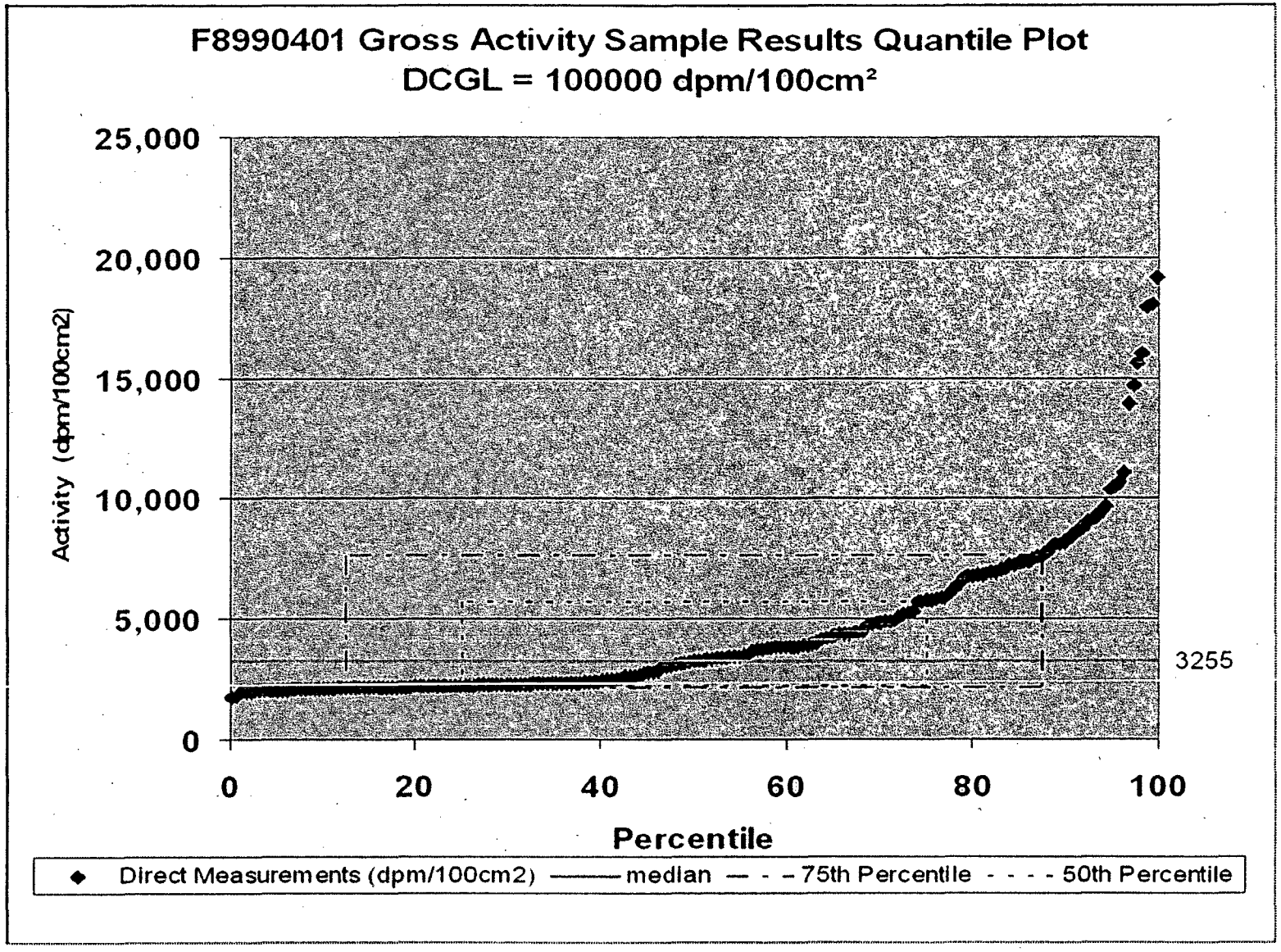
F8990401 Gross Activity Sample Results Quantile Plot
DCGL = 100000 dpm/100cm²
Activity (dpm/100cm2)
25,000
20,000
15,000
10,000
5,000
0
0
20
40
60
80
100
Percentile
3255
Direct Measurements (dpm/100cm2)
median
75th Percentile
50th Percentile

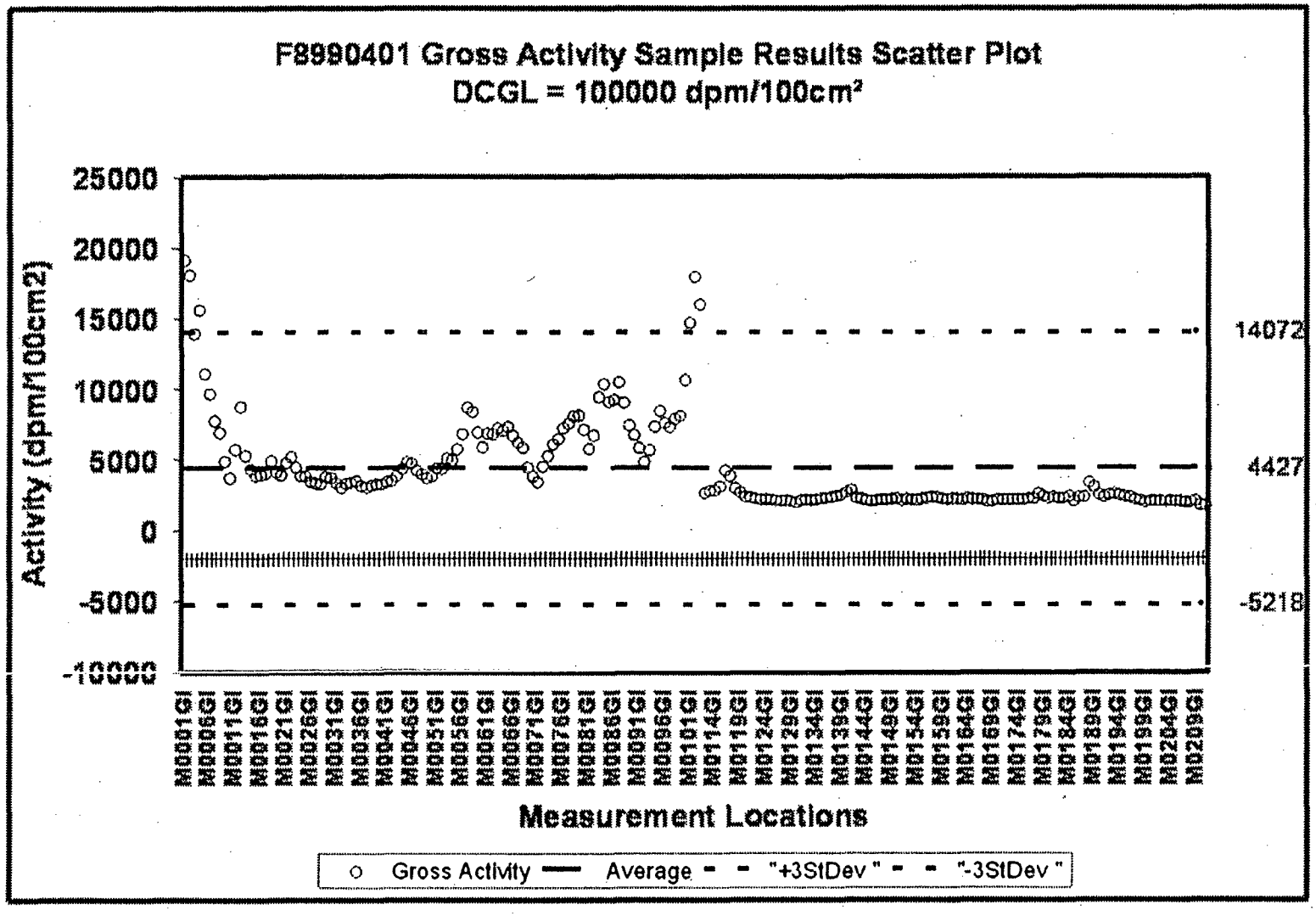
F8990401 Gross Activity Sample Results Scatter Plot
DCGL = 100000 dpm/100cm²
Activity (dpm/100cm2)
25000
20000
15000
10000
5000
0
-5000
-10000
14072
4427
-5218
M0001GI
M0006GI
M0011GI
M0016GI
M0021GI
M0026GI
M0031GI
M0036GI
M0041GI
M0046GI
M0051GI
M0056GI
M0061GI
M0066GI
M0071GI
M0076GI
M0081GI
M0086GI
M0091GI
M0096GI
M0101GI
M0114GI
M0119GI
M0124GI
M0129GI
M0134GI
M0139GI
M0144GI
M0149GI
M0154GI
M0159GI
M0164GI
M0169GI
M0174GI
M0179GI
M0184GI
M0189GI
M0194GI
M0199GI
M0204GI
M0209GI
Measurement Locations
Gross Activity
Average
"+3StDev"
"-3StDev"

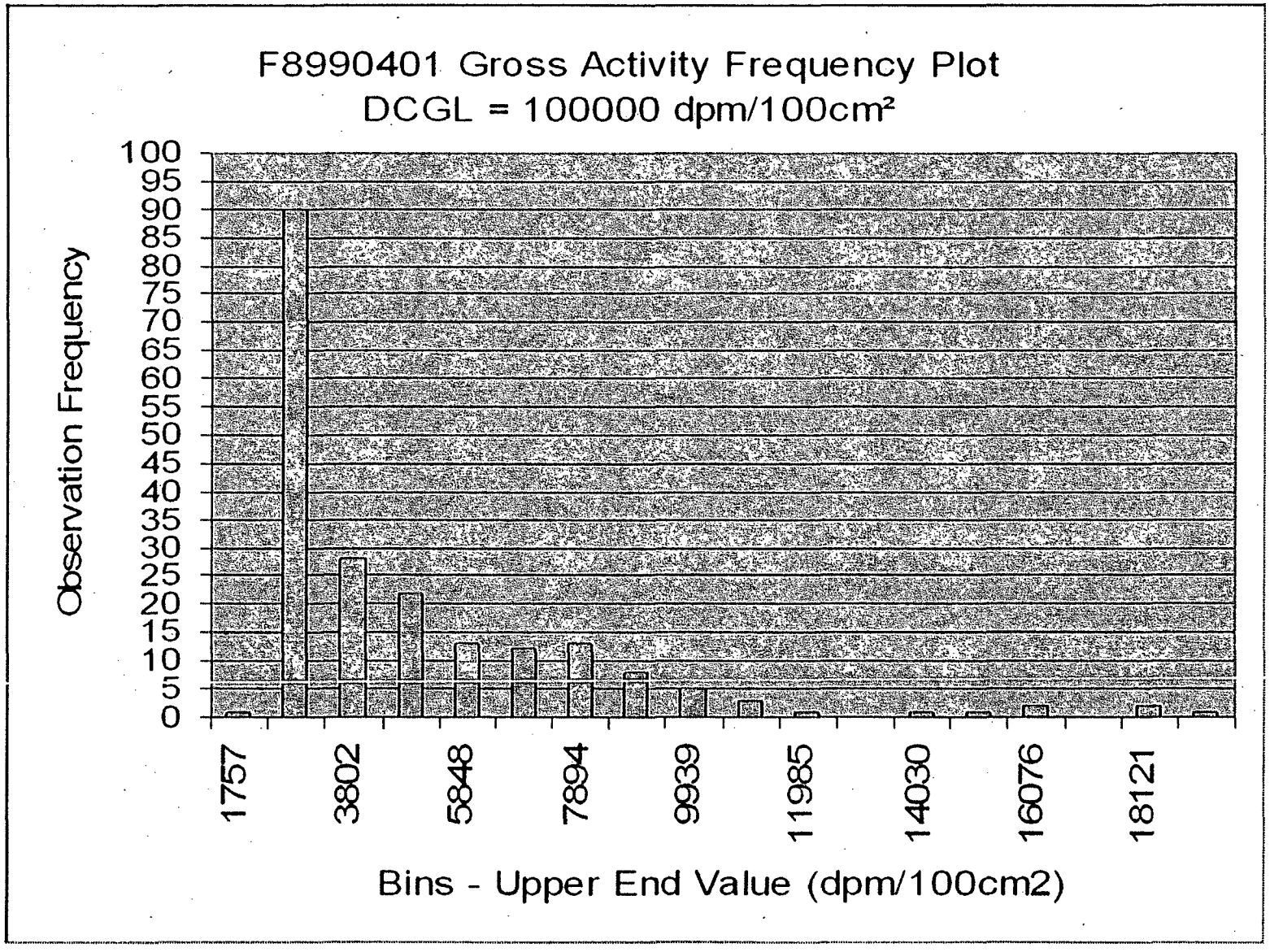
F8990401 Gross Activity Frequency Plot
DCGL = 100000 dpm/100cm²
Observation Frequency
100
95
90
85
80
75
70
65
60
55
50
45
40
35
30
25
20
15
10
5
0
1757
3802
5848
7894
9939
11985
14030
16076
18121
Bins - Upper End Value (dpm/100cm2)