Rancho Seco

Final Status Survey Summary Report

November 10, 2008

Decay Heat Drains Reactor Building

Survey Unit F8990111

Prepared By: Erin L. Brown Date: 11/10/2008

FSS Engineer

Reviewed By: R T Duhn Date: 11/16/08

Lead FSS Engineer

Approved By: E.T. Date: 2-27-09

Dismantlement Superintendent, Radiological

FINAL STATUS SURVEY SUMMARY REPORT

Survey Unit:

F8990111, Decay Heat Drains Reactor Building

Survey Unit Description:

Operating History: This system transported contaminated reactor coolant water through the heat exchangers which removed reactor decay heat during shutdown conditions. This system was known to be contaminated. Operating records and the HSA document the occurrence of radioactive contamination associated with this system piping.

Site Characterization: Direct measurements were made of the interior surfaces of the system piping which confirmed the presence of plant-derived radionuclides. Direct measurements of the interior showed a mean gross activity level of 480,508 dpm/100 cm^2 and a maximum value of 3,412,000 dpm/100 cm^2. Based on the classification procedure (DSIP-0020) and levels of gross activity reported, the system was determined to be a Class 1 system.

HSA Events: N/A Radioactive by design.

Survey Unit Design Information:

The Survey Unit Design Parameters are presented in Table 1 below. The survey unit and measurement locations are depicted on the maps in Attachment 1. Direct measurement locations were spaced at 15 cm intervals and 49 m^2 were scanned for 100% coverage. The instrumentation used for the survey along with the MDC values are listed in Tables 2-1 and 2-2 in Attachment 2.

Table 1. Survey Unit Design Parameters

Survey Design Parameter	Value	Comment
Survey Area:	F899	Decay Heat Drains Reactor Building
Survey Unit:	0111	Structure Surface
Class:	1	LTP Table 5-4
SU Area (m^2)**:**	49	
Evaluator:	Erin L. Brown	
DCGL (dpm/100 cm^2)**:**	100000	Gross Activity DCGL
Area Factor:	1	Class 1
Design DCGLemc (dpm/100 cm^2)**:**	100000	Class 1
LBGR (dpm/100 cm^2)**:**	50000	Default = 50% DCGL
Design Sigma (dpm/100 cm^2)**:**	15498	
Type I Error:	0.05	
Type II Error:	0.05	
Predominant Nuclide:	Cs-137	
Sample Area (m^2)**:**	N/A	Embedded Pipe
Scan Area (m^2)**:**	49	
Scan Coverage (%):	100%	Class 1
$Z_{1-\alpha}$ **:**	1.645	
$Z_{1-\beta}$ **:**	1.645	
Sign P:	0.99865	
Calculated Relative Shift:	3.3	
Relative Shift Used:	3	Uses 3.0 if Relative Shift is >3
N-Value:	11	
Design N-Value + 20%:	14	NUREG-1575 Table 5-5
Design Min Samples N:	14	Class 1
Grid Spacing L:	1.8	Class 1

Survey Results:

A total of 227 direct measurements were made in F8990111. The results including mean, median, standard deviation and range are shown in Table 2. All direct measurements were less than the DCGL. None of the measurements indicated areas of elevated activity. Survey activity ranged from 10024 to 44824 dpm/100 cm², based on the pipe detector efficiency.

Table 2. Direct Measurement Results

Measurement ID	Gross Activity (dpm/100 cm²)
F8990111-M0001GI	12284
F8990111-M0002GI	13066
F8990111-M0003GI	15075
F8990111-M0004GI	18099
F8990111-M0005GI	21841
F8990111-M0006GI	28894
F8990111-M0007GI	37338
F8990111-M0008GI	44824
F8990111-M0009GI	37274
F8990111-M0010GI	32526
F8990111-M0011GI	31363
F8990111-M0012GI	30305
F8990111-M0013GI	26612
F8990111-M0014GI	24802
F8990111-M0015GI	23759
F8990111-M0016GI	22902
F8990111-M0017GI	21549
F8990111-M0018GI	20522
F8990111-M0019GI	20086
F8990111-M0020GI	19273
F8990111-M0021GI	18889
F8990111-M0022GI	18646
F8990111-M0023GI	18412
F8990111-M0024GI	17833
F8990111-M0025GI	18676
F8990111-M0026GI	20982
F8990111-M0027GI	24705
F8990111-M0028GI	28962
F8990111-M0029GI	27938
F8990111-M0030GI	24215
F8990111-M0031GI	22750
F8990111-M0032GI	25178
F8990111-M0033GI	27911
F8990111-M0034GI	29611
F8990111-M0035GI	33970
F8990111-M0036GI	38618
F8990111-M0037GI	39483
F8990111-M0038GI	38366
F8990111-M0039GI	34393
F8990111-M0040GI	27850

F8990111-M0041GI	22426
F8990111-M0042GI	18962
F8990111-M0043GI	18026
F8990111-M0044GI	17379
F8990111-M0045GI	16820
F8990111-M0046GI	17263
F8990111-M0047GI	17520
F8990111-M0048GI	18493
F8990111-M0049GI	19584
F8990111-M0050GI	20004
F8990111-M0051GI	18617
F8990111-M0052GI	18262
F8990111-M0053GI	18556
F8990111-M0054GI	18616
F8990111-M0055GI	19691
F8990111-M0056GI	20728
F8990111-M0057GI	24040
F8990111-M0058GI	23886
F8990111-M0059GI	24870
F8990111-M0060GI	26692
F8990111-M0061GI	28638
F8990111-M0062GI	30437
F8990111-M0063GI	33051
F8990111-M0064GI	34653
F8990111-M0065GI	31202
F8990111-M0066GI	34755
F8990111-M0067GI	37259
F8990111-M0068GI	37481
F8990111-M0069GI	34480
F8990111-M0070GI	31747
F8990111-M0071GI	32166
F8990111-M0072GI	28260
F8990111-M0073GI	30612
F8990111-M0074GI	29633
F8990111-M0075GI	28592
F8990111-M0076GI	30235
F8990111-M0077GI	32902
F8990111-M0078GI	30779
F8990111-M0079GI	32286
F8990111-M0080GI	28675
F8990111-M0081GI	28393
F8990111-M0082GI	28210
F8990111-M0083GI	28988
F8990111-M0084GI	26514
F8990111-M0085GI	26504
F8990111-M0086GI	24184
F8990111-M0087GI	25945
F8990111-M0088GI	29699
F8990111-M0089GI	32267
F8990111-M0090GI	30896
F8990111-M0091GI	28210
F8990111-M0092GI	27316
F8990111-M0093GI	25980
F8990111-M0094GI	24271
F8990111-M0095GI	27264
F8990111-M0096GI	28682

F8990111-M0097GI	29249
F8990111-M0098GI	27863
F8990111-M0099GI	24856
F8990111-M0100GI	22701
F8990111-M0101GI	21669
F8990111-M0102GI	21352
F8990111-M0103GI	20480
F8990111-M0104GI	19256
F8990111-M0132GI	10024
F8990111-M0133GI	12758
F8990111-M0134GI	17502
F8990111-M0135GI	17744
F8990111-M0136GI	16861
F8990111-M0137GI	16771
F8990111-M0138GI	16960
F8990111-M0139GI	18821
F8990111-M0140GI	20165
F8990111-M0141GI	21464
F8990111-M0142GI	21263
F8990111-M0143GI	21197
F8990111-M0144GI	21366
F8990111-M0145GI	21727
F8990111-M0146GI	22949
F8990111-M0147GI	23716
F8990111-M0148GI	26965
F8990111-M0149GI	28351
F8990111-M0150GI	26516
F8990111-M0151GI	37003
F8990111-M0152GI	36558
F8990111-M0153GI	37452
F8990111-M0154GI	39794
F8990111-M0155GI	38062
F8990111-M0156GI	28767
F8990111-M0157GI	25855
F8990111-M0158GI	23788
F8990111-M0159GI	23344
F8990111-M0160GI	22379
F8990111-M0161GI	21792
F8990111-M0162GI	20121
F8990111-M0163GI	17193
F8990111-M0164GI	15517
F8990111-M0165GI	15265
F8990111-M0166GI	15488
F8990111-M0167GI	15488
F8990111-M0168GI	15948
F8990111-M0169GI	17802
F8990111-M0170GI	17814
F8990111-M0171GI	17112
F8990111-M0172GI	16745
F8990111-M0173GI	15208
F8990111-M0174GI	14503
F8990111-M0175GI	14673
F8990111-M0176GI	14581
F8990111-M0177GI	14446
F8990111-M0178GI	13818
F8990111-M0179GI	12965

F8990111-M0180GI	13191
F8990111-M0181GI	12912
F8990111-M0182GI	12774
F8990111-M0183GI	12605
F8990111-M0184GI	11888
F8990111-M0185GI	11943
F8990111-M0186GI	11984
F8990111-M0187GI	12100
F8990111-M0188GI	12339
F8990111-M0189GI	12508
F8990111-M0190GI	12467
F8990111-M0191GI	12946
F8990111-M0192GI	13352
F8990111-M0193GI	13587
F8990111-M0194GI	13982
F8990111-M0195GI	15341
F8990111-M0196GI	18119
F8990111-M0197GI	22070
F8990111-M0198GI	24848
F8990111-M0199GI	27184
F8990111-M0200GI	30387
F8990111-M0201GI	32333
F8990111-M0202GI	31002
F8990111-M0203GI	27034
F8990111-M0204GI	21012
F8990111-M0205GI	18743
F8990111-M0206GI	18648
F8990111-M0207GI	18033
F8990111-M0208GI	18386
F8990111-M0209GI	19883
F8990111-M0210GI	21022
F8990111-M0211GI	21405
F8990111-M0212GI	22996
F8990111-M0213GI	24141
F8990111-M0214GI	24497
F8990111-M0215GI	26433
F8990111-M0216GI	26274
F8990111-M0217GI	26329
F8990111-M0218GI	25898
F8990111-M0219GI	22279
F8990111-M0220GI	19479
F8990111-M0221GI	17524
F8990111-M0222GI	16657
F8990111-M0223GI	16728
F8990111-M0224GI	16291
F8990111-M0225GI	16670
F8990111-M0226GI	16825
F8990111-M0227GI	16411
F8990111-M0228GI	15854
F8990111-M0229GI	14952
F8990111-M0230GI	14541
F8990111-M0231GI	15166
F8990111-M0232GI	15994
F8990111-M0233GI	17710
F8990111-M0234GI	17826
F8990111-M0235GI	17588

F8990111-M0236GI	17383
F8990111-M0237GI	17600
F8990111-M0238GI	18449
F8990111-M0239GI	19327
F8990111-M0240GI	19051
F8990111-M0241GI	18494
F8990111-M0242GI	18061
F8990111-M0243GI	17467
F8990111-M0244GI	17650
F8990111-M0245GI	18383
F8990111-M0246GI	19377
F8990111-M0247GI	20741
F8990111-M0248GI	21704
F8990111-M0249GI	21349
F8990111-M0250GI	19520
F8990111-M0251GI	18410
F8990111-M0252GI	17955
F8990111-M0253GI	18151
F8990111-M0254GI	18580
Mean:	22512
Median:	21022
Standard Deviation:	6987
Range:	10024 - 44824

Survey Unit Data Assessment:

The survey design required 227 direct measurements for the Sign Test. The critical value and the results of the Sign Test are presented in Table 4. The sample mean and median values were less than the DCGL. The sample standard deviation was less than the design standard deviation so no additional samples were required.

Table 4. Data Assessment Results

Survey Results Parameter	Value	Comment
Material Background Used (dpm/100 cm^2):	N/A	
Ambient Background Used (dpm/100 cm^2):	N/A	Average Ambient BKG = 0
Actual Direct Measurements (N):	227	
Median (dpm/100 cm^2):	21022	
Mean (dpm/100 cm^2):	22512	
Direct Measurement Standard Deviation (dpm/100 cm^2):	6987	
Total Standard Deviation (dpm/100 cm^2):	6987	Based on samples and backgrounds.
Maximum (dpm/100 cm^2):	44824	
Material Type:	N/A	Background Subtract Not Applied
Sign Test Final N Value:	227	
S+ Value:	227	
Critical Value:	126	
Sufficient Samples Collected:	Yes	
Maximum Value < DCGL:	Yes	
Median Value < DCGL:	Yes	
Mean Value < DCGL:	Yes	
Maximum Value < DCGLemc:	Yes	Class 1
Total Standard Deviation <= Sigma:	Yes	
Pass the Sign Test?	Yes	
Reject the Null Hypothesis?	Yes	
Does the Survey Unit Pass All Criteria?	Yes	

Survey Unit Investigations and Results:

No investigations were required and no investigation results are reported.

ALARA Statement:

As stated in Chapter 4 of the LTP, as long as the residual activity within the survey unit is less than the DCGL (i.e. the survey unit average activity is less than the DCGL and the EMC criterion has been met), the ALARA criterion has been met.

Changes in Initial Survey Unit Assumptions:

The survey unit was designed as a Class 1 structure survey and the sample results are consistent with that classification. The variability of the survey results was less than the characterization data used for survey design. No potential areas of elevated activity were detected.

Conclusion:

The FSS of this survey unit was properly designed as a Class 1 survey based on Table 5-4 of the LTP. The required number of direct measurements was made and the scan coverage met the requirement of the LTP for pipe surveys. No direct measurements exceeded the DCGL of 100000 dpm/100 cm^2. No investigations were required.

The direct measurement data support rejection of the null hypothesis, providing high confidence that the survey unit satisfied the release criteria and that the data quality objectives were met.

It is concluded that survey unit F8990111 meets the release criteria of 10CFR20.1402.

Attachment 1

Maps

November 10, 2008

Survey Unit F8990111

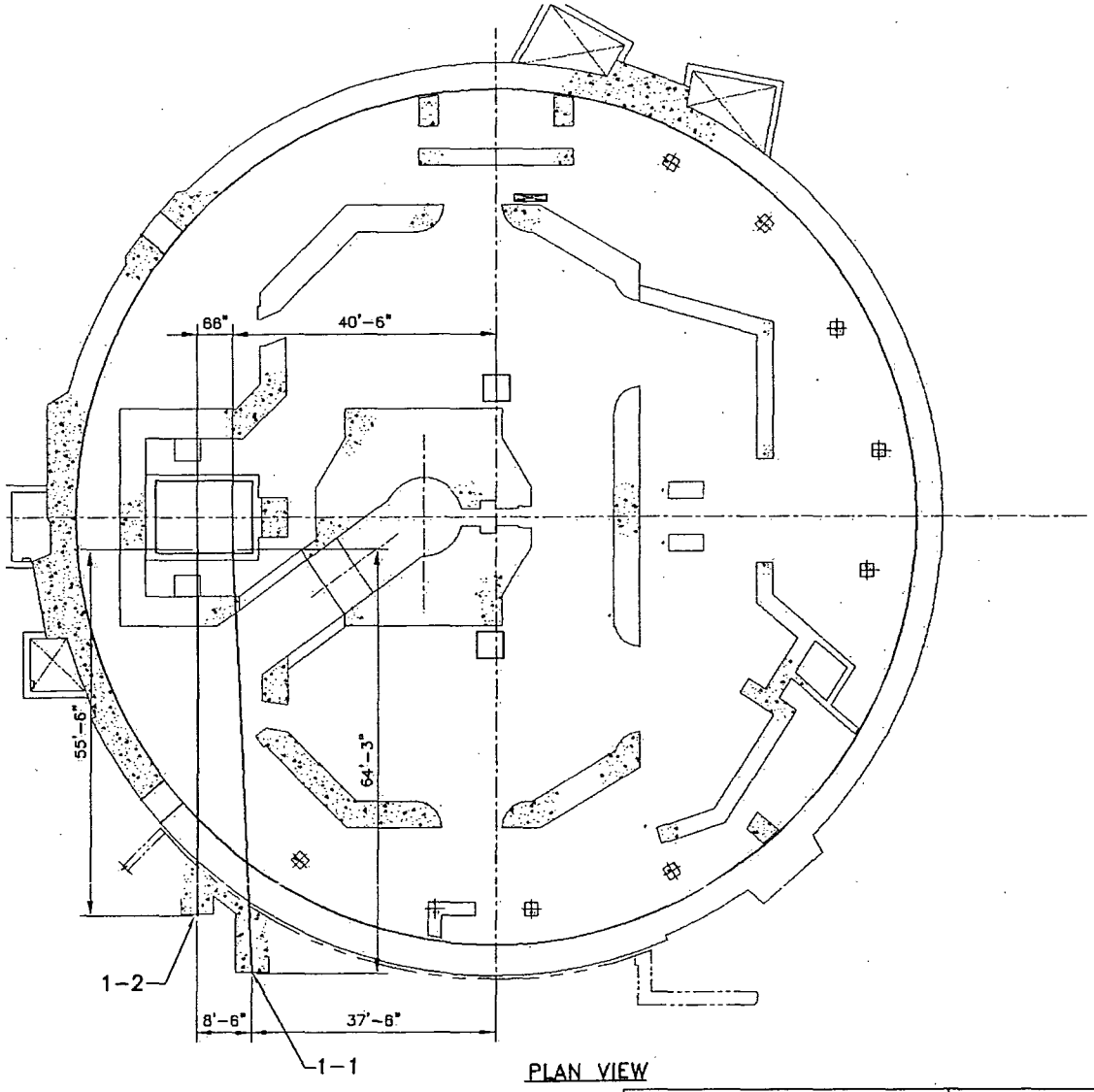

PLAN VIEW

0 1 2 3 4 5
SCALE
METERS

N

SMUD
SACRAMENTO MUNICIPAL
UTILITY DISTRICT

REACTOR BUILDING EL. -25'
DECAY HEAT PIPING

F8990111-M1

FILE: F899011 SHEET 1 OF 1 RC RAYMOND

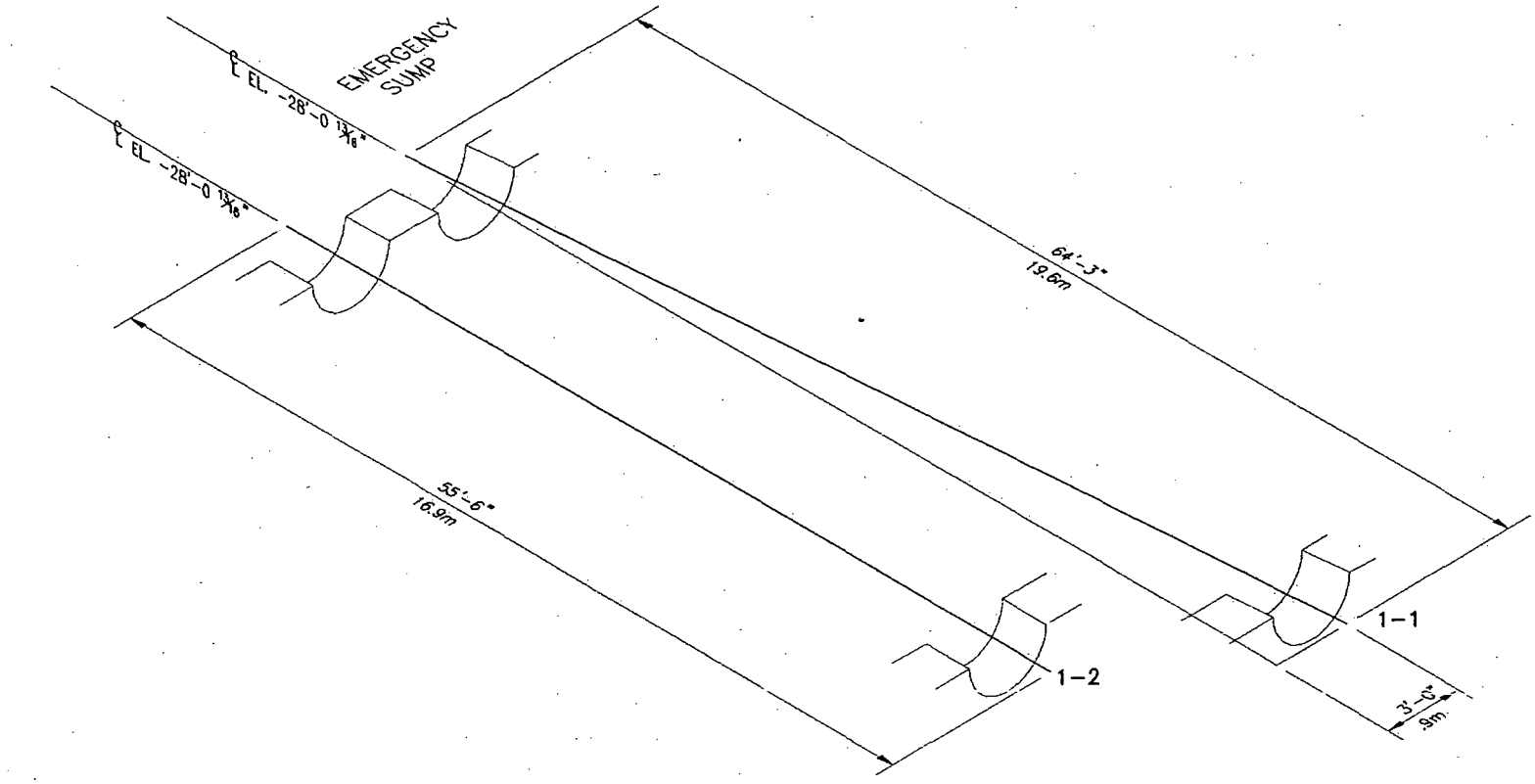

PIPING SUMMARY

SIZE	LENGTH	AREA
18"ø	125 LF	53 SM

SMUD
SACRAMENTO MUNICIPAL UTILITY DISTRICT

REACTOR BUILDING EL. -25'
DECAY HEAT PIPING ISOMETRIC

F8990111-M2

FILE: F899011 SHEET 1 OF 1 RC RAYMOND

Attachment 2

Instrumentation

November 10, 2008

Survey Unit F8990111

Table 2-1. Survey Unit Instrumentation

Instrument Model; Serial No.	Detector Model; Serial No.	MDC Static (dpm/100 cm²)	MDC Scan (dpm/100 cm²)
M2350; 142512	44-162; L206935	2590	N/A

The MDC noted for the detector model 44-162 is for the 18" diameter piping which was the actual survey performed.

Table 2-2. Investigation Criteria and DCGL

Parameter	Value (dpm/100 cm^2)
Investigation Criteria - Direct	100000
Investigation Criteria – Scan	N/A
$DCGL_W$	100000
$DCGL_{EMC}$	N/A

Attachment 3

Investigation

November 10, 2008

Survey Unit F8990111

(none required)

Attachment 4

Data Assessment

November 10, 2008

Survey Unit F8990111

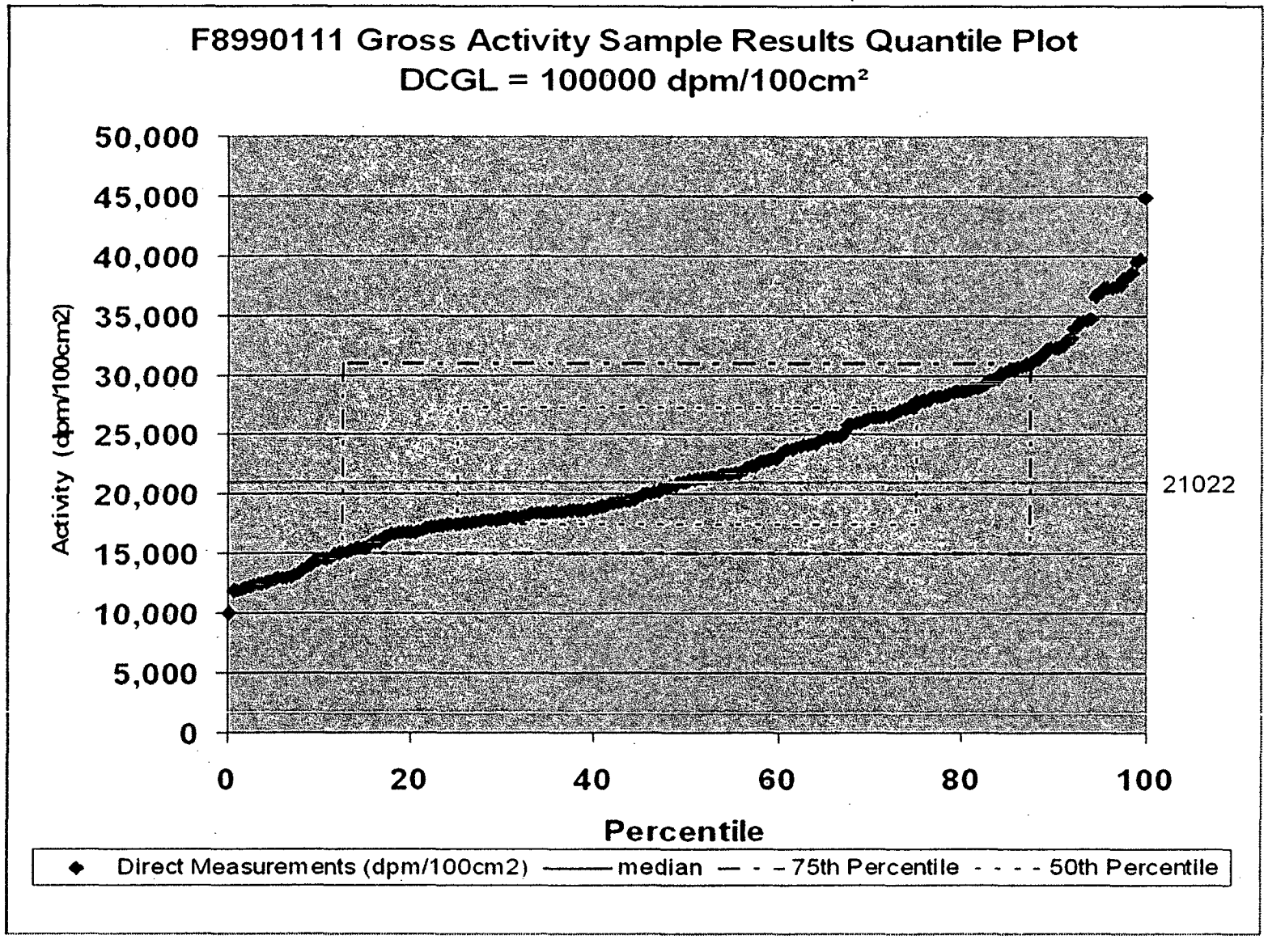
F8990111 Gross Activity Sample Results Quantile Plot
DCGL = 100000 dpm/100cm²
Activity (dpm/100cm2)
50,000
45,000
40,000
35,000
30,000
25,000
20,000
15,000
10,000
5,000
0
0
20
40
60
80
100
Percentile
21022
Direct Measurements (dpm/100cm2)
median
75th Percentile
50th Percentile

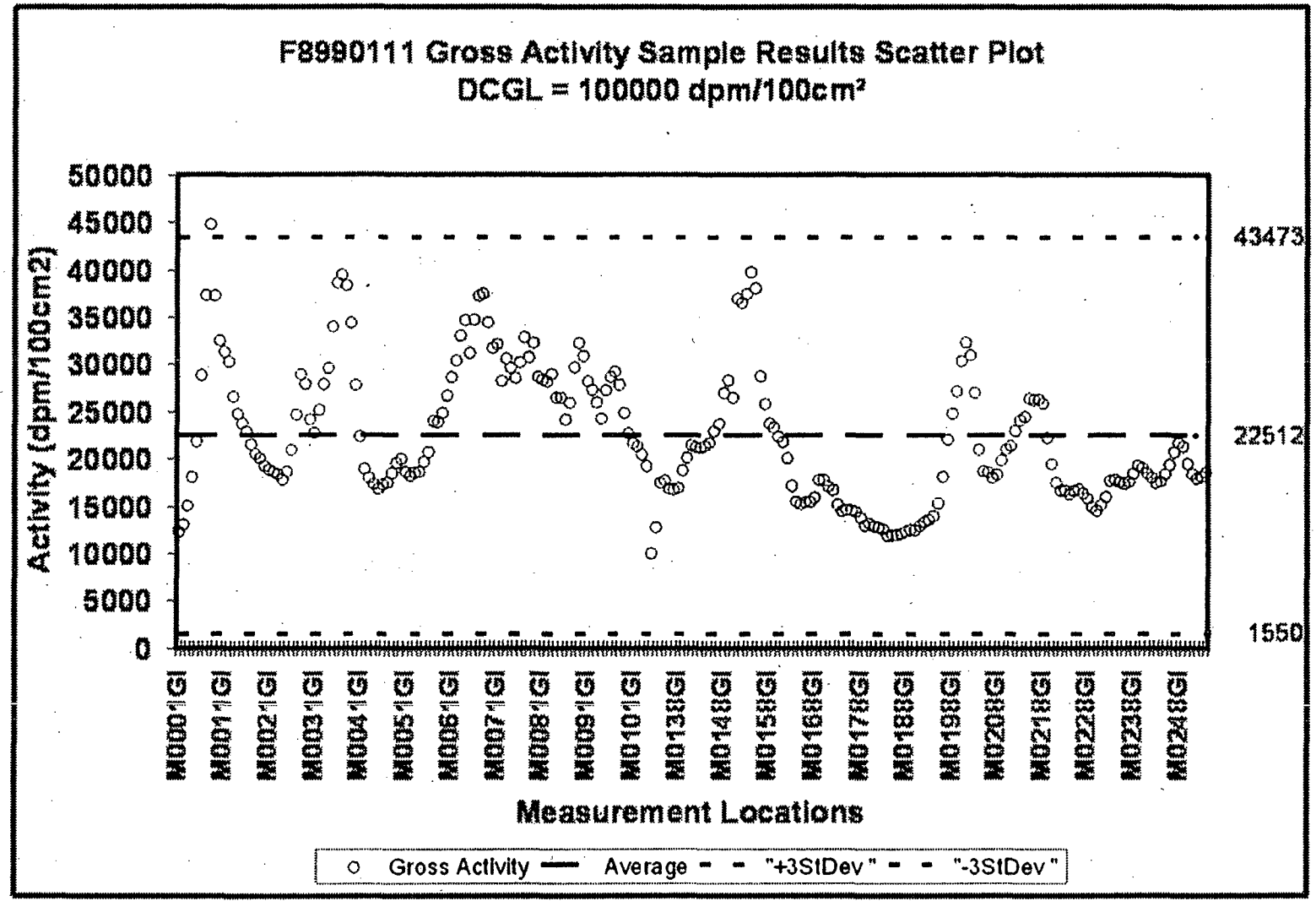
F8990111 Gross Activity Sample Results Scatter Plot
DCGL = 100000 dpm/100cm²
Activity (dpm/100cm2)
50000
45000
40000
35000
30000
25000
20000
15000
10000
5000
0
43473
22512
1550
M001GI
M011GI
M021GI
M031GI
M041GI
M051GI
M061GI
M071GI
M081GI
M091GI
M101GI
M131GI
M141GI
M151GI
M161GI
M171GI
M181GI
M191GI
M201GI
M211GI
M221GI
M231GI
M241GI
Measurement Locations
Gross Activity
Average
"+3StDev"
"-3StDev"

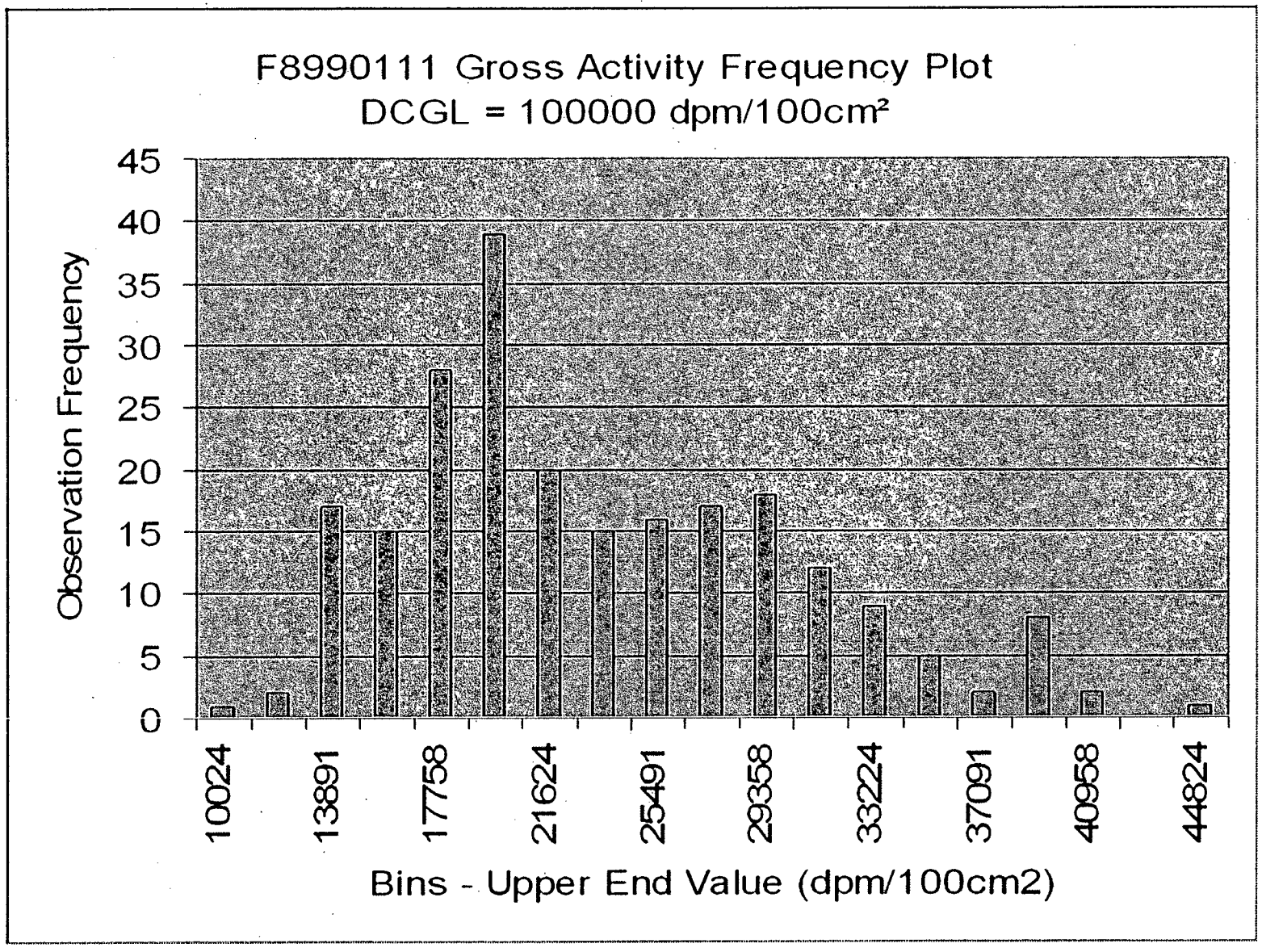
F8990111 Gross Activity Frequency Plot
DCGL = 100000 dpm/100cm²
Observation Frequency
45
40
35
30
25
20
15
10
5
0
10024
13891
17758
21624
25491
29358
33224
37091
40958
44824
Bins - Upper End Value (dpm/100cm2)