8.0 ELECTRIC POWER

This chapter of the U.S. EPR Final Safety Analysis Report (FSAR) is incorporated by reference with supplements as identified in the following sections.

© 2008 UniStar Nuclear Services, LLC. All rights reserved.
COPYRIGHT PROTECTED

8.1 INTRODUCTION

This section of the U.S. EPR FSAR is incorporated by reference with the following supplements.

8.1.1 OFFSITE POWER DESCRIPTION

The U.S. EPR FSAR includes the following COL Item in Section 8.1.1:

> A COL applicant that references the U.S. EPR design certification will provide site-specific information describing the interface between the offsite transmission system, and the nuclear unit, including switchyard interconnections.

This COL Item is addressed as follows:

{The transmission system consists of two circuits. One circuit connects the Nine Mile Point 3 Nuclear Power Plant (NMP3NPP) switchyard to the Clay Substation located in Onondaga County and one circuit connects the NMP3NPP switchyard to the Scriba Substation located in Oswego County. The circuit from NMP3NPP to Clay is a single three-phase 345 kV transmission line run on a common right-of-way and the circuit from NMP3NPP to Scriba is a single three-phase 345 kV transmission line run on a common right-of-way. The routes for the 345 kV transmission line from the NMP3NPP site to the Clay Switchyard and the 345 kV transmission line from the NMP3NPP site to the Scriba Switchyard are presented in Figure 8.1-1.

The NMP3NPP switchyard is integrally connected to the existing Nine Mile Point (NMP) Unit 1 345 kV switchyard by one 345 kV, 1030 MVA line on individual towers. At the existing NMP Unit 1 switchyard, the line position previously used for the 345 kV transmission circuit from NMP Unit 1 to Clay Switchyard is modified and extended to provide a transmission line connection to the NMP3NPP switchyard.

The NMP3NPP is connected to NMP3NPP switchyard by means of six overhead lines.}

The interface between the transmission system and the nuclear unit is further described in Section 8.2.

8.1.2 ONSITE POWER SYSTEM DESCRIPTION

No departures or supplements.

8.1.3 SAFETY-RELATED LOADS

The U.S. EPR FSAR includes the following COL Item in Section 8.1.3:

> A COL applicant that references the U.S. EPR design certification will identify site-specific loading differences that raise the EDG or Class 1E battery loading and demonstrate the electrical distribution system is adequately sized for the additional load.
>
> This COL Item is addressed as follows:

{The loads powered from the U.S. EPR EDGs are specified in Table 8.3-4, Table 8.3-5, Table 8.3-6, and Table 8.3-7 of the U.S. EPR FSAR. Additional site-specific loads powered from the EDGs are specified in Table 8.1-1 through Table 8.1-4. This information supplements U.S. EPR FSAR Table 8.3-4, Table 8.3-5, Table 8.3-6, and Table 8.3-7. The site specific loads are within the design margin of the EDGs.

© 2008 UniStar Nuclear Services, LLC. All rights reserved.
COPYRIGHT PROTECTED

EUPS DC power system load requirements are specified in Tables 8.3-12 through 8.3-15 of the U.S. EPR FSAR. Additional site-specific loads powered from the Class 1E battery source include an additional feeder breaker on the 31/2/3/4BDD bus that provides electrical power to the 6.9 kV to 480 V UHS transformers. Each feeder breaker requires steady state control power of 0.04 kW as listed in the EUPS Battery Sizing Calculation. The additional control power demand on the EUPS is within the design margin of the EUPS battery sizing calculation and does not change the DC power (kW DC) load requirements listed on U.S. EPR FSAR Tables 8.3-12 through 8.3-15.

The NMP3NPP site specific design for UHS makeup does not require additional DC Loads from the class 1E battery.}

8.1.4 DESIGN BASES

8.1.4.1 Offsite Power System

No departures or supplements.

8.1.4.2 Onsite Power System

No departures or supplements.

8.1.4.3 Criteria, Regulatory Guides, Standards, and Technical Positions

No departures or supplements.

8.1.4.4 NRC Generic Letters

The information requested by the NRC in Generic Letter 2006-02 (NRC, 2006), as indicated in U.S. EPR FSAR Section 8.2.1.1, is presented in Section 8.2.1.1.

8.1.5 REFERENCES

{**NRC, 2006.** Grid Reliability and the Impact on Plant Risk and Operability of Off-site Power, NRC Generic Letter 2006-02, U.S. Nuclear Regulatory Commission, February 2006.}

© 2008 UniStar Nuclear Services, LLC. All rights reserved.
COPYRIGHT PROTECTED

Table 8.1-1—{Division 1 Emergency Diesel Generator Nominal Loads}

Time Sequence (sec)	Load Description	Volts	Rating (hp/kW)	Operating Load LOOP (kW)	Operating Load DBA/LOOP (kW)
Load Step Group 1 (Note 1)					
15 (Note 2)	Supply Air Fan for UHS Intake Pump House (1 per division)	480	2.5 hp	2.1	2.1
15 (Note 2)	Electric Duct Heater for UHS Intake Pump House (1 per division)	480	23 kW	0	0
15 (Note 3)	Air Control Damper for UHS Intake Pump House (2 per division, 0.3 HP each)	480	0.6 Hp	0	0
15 (Note 3)	UHS Makeup Water Discharge MOVs (1 per division)	480	2 hp	0	0
15 (Note 3)	UHS Makeup Recirculation MOVs (1 per division)	480	2 hp	0	0
15 (Note 3)	UHS Makeup Water Strainer Isolation MOVs (2 per division, 2 HP each)	480	8 hp	0	0
15 (Note 3)	UHS Test Bypass MOV (1 per division)	480	2 hp	0	0
15 (Note 3)	UHS Bypass MOV (1 per division)	480	2 hp	0	0
15 (Note 3)	UHS Flow Control MOV	480	2 hp	0	0
15	Self Cleaning filter motor. (4 per division, 2 HP each)	480	4 hp	0	0
15 (Note 4)	Estimated Cable Losses per division		2 kW	2	2
15	Allowance for future small loads		5 kW	5	5
Subtotal of Additional Loads for Load Step Group 1				**9.1**	**9.1**
Additional Manually Connected Loads					
N/A (Note 5)	UHS Makeup Water Pumps	480	50 hp	0	0
Total of Additional Manually Connected Loads				**0**	**0**

Notes:

1. Power to the UHS Makeup Water Intake Structure and is available from the 31BMD bus during the EDG Loading Sequence Step 1.
2. Cooling systems are assumed to be operating and heating systems are off.
3. Loads seldom function and are not credited towards EDG loading.
4. Estimated Losses.
5. UHS Makeup Water Pumps are not required to run during the first 72 hours of a DBE.

© 2008 UniStar Nuclear Services, LLC. All rights reserved.
COPYRIGHT PROTECTED

Table 8.1-2—{Division 2 Emergency Diesel Generator Nominal Loads}

Time Sequence (sec)	Load Description	Volts	Rating (hp/kW)	Operating Load LOOP (kW)	Operating Load DBA/LOOP (kW)
Load Step Group 1 (Note 1)					
15 (Note 2)	Supply Air Fan for UHS Intake Pump House (1 per division)	480	2.5 Hp	2.1	2.1
15 (Note 2)	Electric Duct Heater for UHS Intake Pump House (1 per division)	480	16 kW	0	0
15 (Note 2)	Air Control Damper for UHS Intake Pump House (2 per division, 0.3 HP each)	480	0.6 Hp	0	0
15 (Note 3)	UHS Makeup Water Discharge MOVs (1 per division)	480	2 Hp	0	0
15 (Note 3)	UHS Makeup Recirculation MOVs (1 per division)	480	2 Hp	0	0
15	UHS Makeup Water Strainer Isolation MOVs (2 per division, 2 HP each)	480	8 Hp	0	0
15 (Note 3)	UHS Test Bypass MOV (1 per division)	480	2 Hp	0	0
15 (Note 3)	UHS Bypass MOV (1 per division)	480	2 Hp	0	0
15 (Note 3)	UHS Flow Control MOV	480	2 Hp	0	0
15 (Note 3)	Self Cleaning filter motor. (2 per division, 2 HP each)	480	4 Hp	0	0
15 (Note 4)	Estimated Cable Losses per division		2 kW	2	2
15	Allowance for future small loads		5 kW	5	5
Subtotal of Additional Loads for Load Step Group 1				**9.1**	**9.1**
Additional Manually Connected Loads					
N/A (Note 5)	UHS Makeup Water Pumps	480	50 hp	0	0
Total of Additional Manually Connected Loads				**0**	**0**

Notes:

1. Power to the UHS Makeup Water Intake Structure and is available from the 32BMD bus during the EDG Loading Sequence Step 1.
2. Cooling systems are assumed to be operating and heating systems are off.
3. Loads seldom function and are not credited towards EDG loading.
4. Estimated Losses.
5. UHS Makeup Water Pumps are not required to run during the first 72 hours of a DBE.

© 2008 UniStar Nuclear Services, LLC. All rights reserved.
COPYRIGHT PROTECTED

Table 8.1-3— {Division 3 Emergency Diesel Generator Nominal Loads}

Time Sequence (sec)	Load Description	Volts	Rating (hp/kW)	Operating Load LOOP (kW)	Operating Load DBA/LOOP (kW)
Load Step Group 1 (Note 1)					
15 (Note 2)	Supply Air Fan for UHS Intake Pump House (1 per division)	480	2.5 Hp	2.1	2.1
15 (Note 2)	Electric Duct Heater for UHS Intake Pump House (1 per division)	480	16 kW	0	0
15 (Note 2)	Air Control Damper for UHS Intake Pump House (2 per division, 0.3 HP each)	480	0.6 Hp	0	0
15 (Note 3)	UHS Makeup Water Discharge MOVs (1 per division)	480	2 Hp	0	0
15 (Note 3)	UHS Makeup Recirculation MOVs (1 per division)	480	2 Hp	0	0
15 (Note 3)	UHS Makeup Water Strainer Isolation MOVs (4 per division, 2 HP each)	480	8 Hp	0	0
15 (Note 3)	UHS Test Bypass MOV (1 per division)	480	2 Hp	0	0
15 (Note 3)	UHS Bypass MOV (1 per division)	480	2 Hp	0	0
15 (Note 3)	UHS Flow Control MOV	480	2 Hp	0	0
15	Self Cleaning filter motor. (2 per division, 2 HP each)	480	4 Hp	0	0
15 (Note 4)	Estimated Cable Losses		2 kW	2	2
15	Allowance for future small loads		5 kW	5	5
Subtotal of Additional Loads for Load Step Group 1				**9.1**	**9.1**
Additional Manually Connected Loads					
N/A (Note 5)	UHS Makeup Water Pumps	480	50 hp	0	0
Total of Additional Manually Connected Loads				**0**	**0**

Notes:

1. Power to the UHS Makeup Water Intake Structure and is available from the 33BMD bus during the EDG Loading Sequence Step 1.
2. Cooling systems are assumed to be operating and heating systems are off.
3. Loads seldom function and are not credited towards EDG loading.
4. Estimated Losses.
5. UHS Makeup Water Pumps are not required to run during the first 72 hours of a DBE.

© 2008 UniStar Nuclear Services, LLC. All rights reserved.
COPYRIGHT PROTECTED

Table 8.1-4—{Division 4 Emergency Diesel Generator Nominal Loads}

Time Sequence (sec)	Load Description	Volts	Rating (hp/kW)	Operating Load LOOP (kW)	Operating Load DBA/LOOP (kW)
Load Step Group 1 (Note 1)					
15 (Note 2)	Supply Air Fan for UHS Intake Pump House (1 per division)	480	2.5 Hp	2.1	2.1
15 (Note 2)	Electric Duct Heater for UHS Intake Pump House (1 per division)	480	16 kW	0	0
15 (Note 2)	Air Control Damper for UHS Intake Pump House (2 per division, 0.3 HP each)	480	0.3 Hp	0	0
15 (Note 3)	UHS Makeup Water Discharge MOVs (1 per division)	480	2 Hp	0	0
15 (Note 3)	UHS Makeup Recirculation MOVs (1 per division)	480	2 Hp	0	0
15 (Note 3)	UHS Makeup Water Strainer Isolation MOVs (4 per division, 2 HP each)	480	8 Hp	0	0
15 (Note 3)	UHS Test Bypass MOV (1 per division)	480	2 Hp	0	0
15 (Note 3)	UHS Bypass MOV (1 per division)	480	2 Hp	0	0
15 (Note 3)	UHS Flow Control MOV	480	2 Hp	0	0
15	Self Cleaning filter motor. (2 per division, 2 HP each)	480	4 Hp	0	0
15 (Note 4)	Estimated Cable Losses		2 kW	2	2
15	Allowance for future small loads		5 kW	5	5
Subtotal of Additional Loads for Load Step Group 1				**9.1**	**9.1**
Additional Manually Connected Loads					
N/A (Note 5)	UHS Makeup Water Pumps	480	50 hp	0	0
Total of Additional Manually Connected Loads				**0**	**0**

Notes:

1. Power to the UHS Makeup Water Intake Structure and is available from the 34BMD bus during the EDG Loading Sequence Step 1.
2. Cooling systems are assumed to be operating and heating systems are off.
3. Loads seldom function and are not credited towards EDG loading.
4. Estimated Losses.
5. UHS Makeup Water Pumps are not required to run during the first 72 hours of a DBE.

© 2008 UniStar Nuclear Services, LLC. All rights reserved.
COPYRIGHT PROTECTED

Figure 8.1-1—{NMP3NPP Site 345 kV Circuit Corridors}

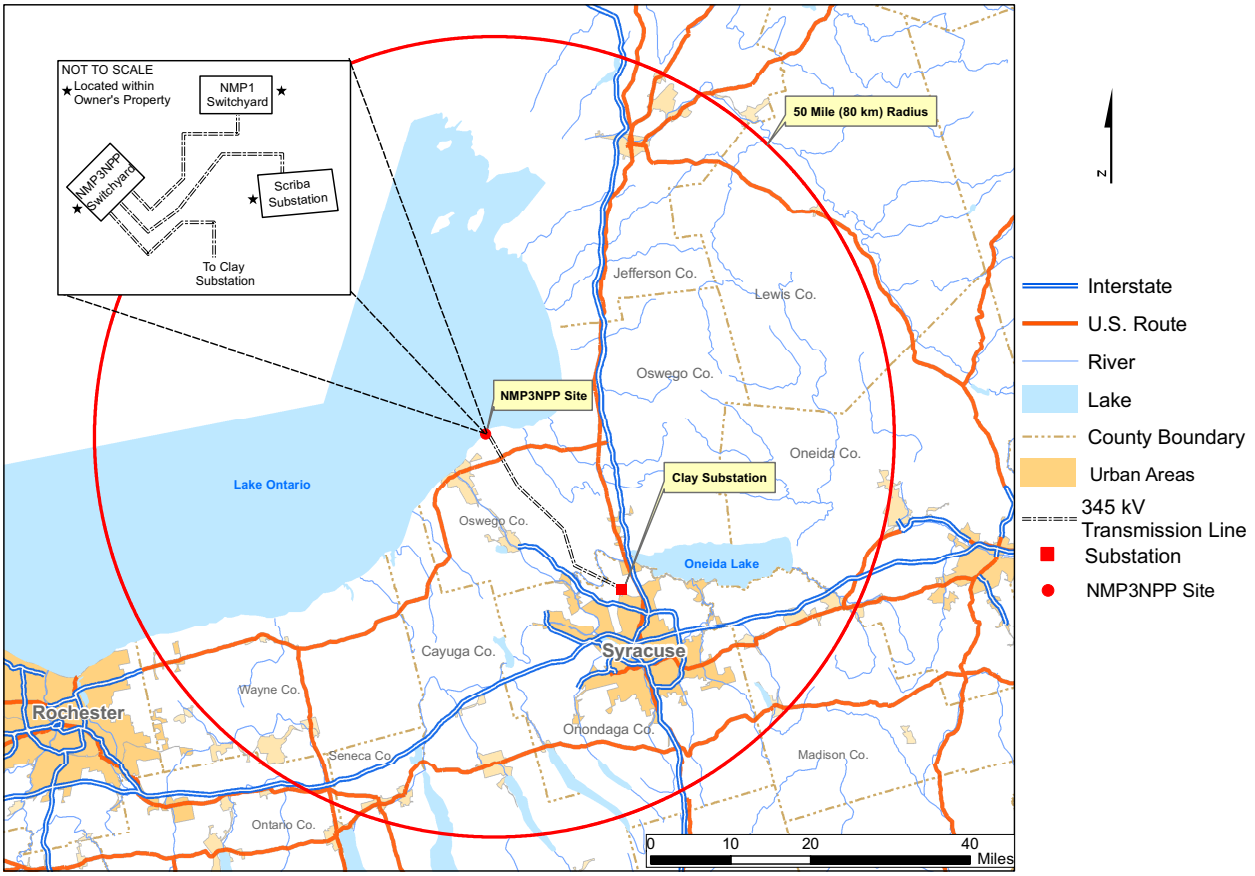

© 2008 UniStar Nuclear Services, LLC. All rights reserved.
COPYRIGHT PROTECTED

8.2 OFFSITE POWER SYSTEM

This section of the U.S. EPR FSAR is incorporated by reference with the following supplements.

8.2.1 DESCRIPTION

8.2.1.1 Offsite Power

The U.S. EPR FSAR includes the following COL Item in Section 8.2.1.1:

> A COL applicant that references the U.S. EPR design certification will provide site-specific information regarding the offsite transmission system and connections to the station switchyard.

This COL Item is addressed as follows:

{The new NMP3NPP switchyard is connected to NMP3NPP by means of six overhead lines.

- One line connects to the plant main transformer and is used for power export to the transmission system.
- Five lines connect to the auxiliary transformers. (Two emergency auxiliary transformers (EATs) and three normal auxiliary transformers (NATs).)

In addition, three normally energized, physically independent transmission lines, designed and located to minimize the likelihood of their simultaneous failure under operating, postulated accident, and postulated adverse environmental conditions, including transmission line tower failure or transmission line breaking; connect the NMP3NPP switchyard to the transmission system:

- One new approximately 0.7 mi (1.1 km) long overhead 345 kV transmission line connects the new NMP3NPP switchyard to the existing 345 kV Scriba switchyard.
- The Clay line #8 that previously connected NMP Unit 1 to Clay Substation was modified with two new overhead 345 kV transmission line extensions. One extension connects NMP Unit 1 switchyard with NMP3NPP switchyard and the second extension connects NMP Unit 1 switchyard to the Clay Substation.

The one new transmission line and two new transmission line extensions from the existing Clay #8 transmission line that connect the NMP3NPP site to the Nation Grid transmission system have a thermal rating greater than 2000 MVA. The retained segments of the Elay transmission line also have a rating greater than 2000 MVA. Figure 8.2-1 depicts the 345 kV transmission configuration.

At least two of the overhead 345 kV transmission lines provide the two preferred sources of power for the reactor protection system and engineered safety features (ESFs) during normal, abnormal, and accident conditions.

NMP3NPP transmission lines utilize the existing (from NMP Unit 1) corridor and right-of-way for interconnects to the existing off-site power transmission grid as shown in Figure 8.2-1. The three circuits are supported on separate structures which are located to minimize the likelihood of simultaneous power failures.

© 2008 UniStar Nuclear Services, LLC. All rights reserved.
COPYRIGHT PROTECTED

The connections to the transmission system consist of three circuits. One circuit consists of a single three-phase 345 kV transmission line from the NMP3NPP to the scriba substation. The second circuit consists of a single three-phase 345 kV transmission line from the NMP3NPP site to the Clay substation. The NMP3NPP- Clay circuit continues in an easterly direction and connects to the existing Line #8, which travels south to Clay Substation, having an approximate length (new extension plus portion of existing Clay Line # 8) of 26.47 mi (42.6 km). The third circuit consists of a single three-phase 345 kV transmission line from the NMP3NPP site to the NMP Unit 1 site. This transmission line is approximately 0.7 mi (1.1 km) in length. The interconnection layout of the transmission lines are shown in Figure 8.2-1.}

The U.S. EPR FSAR includes the following COL Item in Section 8.2.1.1:

> A COL applicant that references the U.S. EPR design certification will provide site-specific information regarding the communication agreements and protocols between the station and the transmission system operator, independent system operator, or reliability coordinator and authority. Additionally, the applicant will provide a description of the analysis tool used by the transmission operator to determine, in real time, the impact that the loss or unavailability of various transmission system elements will have on the condition of the transmission system to provide post-trip voltages at the switchyard. The information provided will be consistent with information requested in NRC generic letter 2006-02.

This COL Item is addressed as follows:

{The New York Independent System Operator (NYISO), operates New York's bulk electricity grid, administers the state's wholesale electricity markets, and provides comprehensive reliability planning. The local transmission facilities that directly interconnect to NMP3NPP are owned and operated by NG under the direction and control of NYISO. NG, NYISO and the NMP3NPP operator have formal agreements and protocols in place to provide safe and reliable operation of the transmission system and equipment at NMP3NPP. These agreements will ensure Nuclear Plant Licensing Requirements will be monitored and maintained.

NYISO undertakes extensive studies during the initial planning of the addition of a large generating unit such as NMP3NPP. These studies identify transmission system modifications to accommodate the generating unit (combined turbine-generator-exciter) and the main step-up transformer including modifications to substations and switchyards. Further studies to assess the impact of NMP3NPP transmission line interconnection system are conducted in accordance with NYISO large generation interconnections procedure (LGIP).

The reliability of the NG system is continuously (real time) analyzed by NYISO and National Grid.

Voltage on all critical busses in the bulk transmission system is monitored by the NYISO and Transmission Owners (TO). TOs are responsible to maintain voltage levels within specified time limits and to coordinate actions that would affect voltage levels on busses of other TO or Neighboring systems. If the NYISO anticipates conditions which would cause the voltage at any critical bus to violate Normal State Criteria, the NYISO will notify the TO and together they shall formulate a corrective strategy. If implementation of the corrective strategy does not produce the desired result and the NYISO determines further corrective action is necessary to remain in the normal state, the NYISO shall request such actions in accordance with Normal State Responses. TOs must coordinate and implement corrective actions as requested by the NYISO.

© 2008 UniStar Nuclear Services, LLC. All rights reserved.
COPYRIGHT PROTECTED

Using this program, NG continuously monitors and evaluates grid reliability and switchyard voltages, and informs NMP3NPP of any grid instability or voltage inadequacies. NMP3NPP reviews the transmission system parameters and informs NG immediately prior to initiating any plant activities that may affect grid reliability. In addition, plant operators inform NG of changes in generation ramp rates and notify them of any developing problems that may impact generation.

The formal agreement between NMP3NPP and NG establishes the requirements for transmission system studies and analyses. NYISO performs short-term grid analyses to support NMP3NPP plant startup and normal shutdown. Long-term grid studies are performed and coordinated with NMP3NPP. Studies of future load growth and new generation additions are performed in accordance with North American Electric Reliability Corporation (NERC), Northeastern Power Coordinating Council NPCC and NYISO standards. Future transmission system improvements resulting from these studies are planned in support of NMP3NPP.

The agreement between NG and NMP3NPP demonstrates protocols in place for the plant to remain cognizant of grid vulnerabilities to make informed decisions regarding maintenance activities critical to the electrical system. During plant operation, NMP3NPP relies on NG to continuously monitor real-time power flows and assesses contingency impacts through use of a state-estimator tool. Operational planning studies are also performed using offline power flow study tools to assess near term operating conditions under varying load, generation, and transmission topology patterns.}

8.2.1.2 Station Switchyard

The U.S. EPR FSAR includes the following COL Item in Section 8.2.1.2:

> A COL applicant that references the U.S. EPR design certification will provide site-specific information for the switchyard layout design.

This COL Item is addressed as follows:

{The new 345 kV air insulated switchyard for NMP3NPP has been designed and is sized and configured to accommodate the output of NMP3NPP. The location of this switchyard is on the NMP3NPP site approximately 150 ft (46 m) south-east of NMP3NPP and approximately 850 ft (260 m) west of the existing Scriba 345 kV switchyard. The 345 kV switchyard transmits electrical power output from NMP3NPP to the NG transmission system. The NMP3NPP switchyard layout and location are shown on Figure 8.2-1.

A single line of the NMP3NPP switchyard layout design, which incorporates a breaker-and-a-half/double breaker scheme, is presented in Figure 8.2-2. Circuit breakers and disconnect switches are sized and designed in accordance with the latest codes and applicable laws and ordinances. All circuit breakers are equipped with dual trip coils. The 345 kV circuit breakers in the switchyard are rated according to the following criteria.

- Circuit breaker continuous current ratings are chosen such that no single contingency in the switchyard (e.g., a breaker being out for maintenance) will result in a load exceeding 100% of the nameplate continuous current rating of the breaker.

- Interrupting duties are specified such that no fault occurring on the system, operating in steady-state conditions will exceed the breaker's nameplate interrupting capability.

© 2008 UniStar Nuclear Services, LLC. All rights reserved.
COPYRIGHT PROTECTED

- Momentary ratings are specified such that no fault occurring on the system, operating in steady-state conditions will exceed the breaker's nameplate momentary rating

- Voltage ratings are specified to be greater than the maximum expected operating voltage.

The design of the NMP3NPP switchyard includes six bays in the configuration. The breaker-and-a-half/double breaker switchyard arrangement offers the operating flexibility to maintain the anticipated operational containment integrity and other vital functions in the event of postulated failures as described in the Failure Modes and Effects Analysis (FMEA) as described in Section 8.2.2.4 and U.S. EPR FSAR Section 8.2.2.4. Some of the specific advantages of the breaker-and-a-half/double breaker switchyard arrangement are as follows.

- Any transmission line into the switchyard can be cleared either under normal or fault conditions without affecting any other transmission line or bus.

- Either bus can be cleared under normal or fault conditions without interruption of any transmission line or the other bus.

- Any circuit breaker can be isolated for maintenance or inspection without interruption of any transmission line or bus.

- A fault in a tie breaker or failure of the breaker to trip for a line fault results only in the loss of its two adjacent circuits until it can be isolated by disconnect switches.

- A fault in a bus side breaker or failure of the breaker to trip for a line or generator fault results only in the loss of the adjacent circuits and the adjacent bus until it can be isolated by disconnect switches.}

The U.S. EPR FSAR includes the following COL Item in Section 8.2.1.2:

> A COL applicant that references the U.S. EPR design certification will provide site-specific information regarding indication and control of switchyard components.

This COL Item is addressed as follows:

{A control house is located along the east side of the switchyard to support control and protection requirements. Control power for switchyard breakers required to connect or disconnect any components of NMP3NPP from the transmission system is provided by the switchyard batteries. There is a dual set of batteries located inside the switchyard control house. Switchyard breakers operate to clear a fault on any auxiliary transformer and for system faults such as bus differential or breaker failure. A switchyard DC system undervoltage condition is alarmed in the main control room.

Administrative control of the switchyard breakers is shared between NMP3NPP and NG. The circuit breakers are controlled remotely from the plant control room or by the transmission system operator (i.e. NG). Local tripping control is also provided at the circuit breakers. Disconnect switches are provided to individually isolate each circuit breaker from the switchyard bus and associated lines. This permits individual breaker maintenance and testing to proceed while the switchyard and lines remain energized.}

The U.S. EPR FSAR includes the following COL Item in Section 8.2.1.2:

© 2008 UniStar Nuclear Services, LLC. All rights reserved.
COPYRIGHT PROTECTED

A COL applicant that references the U.S. EPR design certification will provide site-specific information for the protective devices that control the switchyard breakers and other switchyard relay devices.

This COL Item is addressed as follows:

{Electrical protection of circuits from the NMP3NPP switchyard is provided by a primary and secondary relaying scheme. The current input for the protective relaying schemes come from separate sets of circuit breaker bushing current transformers. Also, the control power for all primary and secondary relaying schemes is supplied from separate switchyard 125 VDC battery systems. These schemes are used for the following:

- The scheme is used on each of the two 345 kV transmission circuits from the NMP3NPP 345 kV switchyard to the NYISO grid. The potential input for the primary and secondary transmission circuit relaying systems is supplied from fused branch circuits originating from a set of coupling capacitor potential devices connected to the associated transmission circuit.

- The switchyard buses use a primary and backup scheme. The zone of protection of each 345 kV bus includes all the 345 kV circuit breakers adjacent to the protected bus.

- Line protection for the Main Step-Up (MSU) transformer and auxiliary transformers use primary and backup schemes.

In addition to the above described relaying systems, each of the 345 kV circuit breakers has an associated circuit breaker failure relaying system. A circuit breaker failure scheme is provided in the unlikely event a circuit breaker fails to trip. If a breaker fails to open coincident with a line fault, tripping of all breakers adjacent to the failed breaker will occur. If the failed breaker is the center breaker, then only the remaining bus breaker will trip resulting in the undesired loss of the other line in the bay. If the failed breaker is a bus breaker then all breakers connected to the same bus will be tripped. Assuming all bus and center breakers are normally closed, the remaining bus will continue to supply all line elements.

For the two 125 VDC batteries located in the NMP3NPP 345 kV switchyard control house, each battery has its own battery charger. Each battery charger is connected to separate 480 VAC distribution panel boards also located in the control house. The switchyard 125 VDC battery systems are independent of the NMP3NPP non-Class 1E and Class 1E battery systems.}

8.2.1.3 Transformer Area

No departures or supplements.

8.2.2 ANALYSIS

No departures or supplements.

8.2.2.1 Compliance with GDC 2

No departures or supplements.

8.2.2.2 Compliance with GDC 4

No departures or supplements.

© 2008 UniStar Nuclear Services, LLC. All rights reserved.
COPYRIGHT PROTECTED

8.2.2.3 Compliance with GDC 5

No departures or supplements.

8.2.2.4 Compliance with GDC 17

The U.S. EPR FSAR includes the following COL Item in Section 8.2.2.4:

> A COL applicant that references the U.S. EPR design certification will provide a site-specific grid stability analysis. The results of the analysis will demonstrate that:
>
> - The PPS is not degraded below a level that will activate EPSS degraded grid protection actions after any of the following single contingencies:
> - U.S. EPR turbine generator trip.
> - Loss of the largest unit supplying the grid.
> - Loss of the largest transmission circuit or inter-tie.
> - Loss of the largest load on the grid.
> - The transmission system will not subject the reactor coolant pumps to a sustained frequency decay of greater than 3.5 Hz/sec as bounded by the decrease in reactor coolant system flow rate transient and accident analysis described in Section 15.3.2.

This COL Item is addressed as follows:

{A load flow and stability study was performed that analyzed load flow, transient stability and fault analysis for the addition of NMP3NPP. The study was prepared using NMP3NPP planning criteria against the 2011/2012 summer peak load and identified the system upgrades necessary to maintain the reliability of the transmission system. For the short circuit analysis, all buses 115 kV and above except for the New York City area were included in the analysis. For the load flow analysis, peak loading is utilized. For the stability analysis, contingencies are based on the NYISO Transmission and Interconnection Manual, Attachment F (NYISO, 1999).

The computer analysis was performed using the Seimens PSS/E Software. The analysis examined conditions involving loss of the largest generating unit, loss of the most critical transmission line, and multiple facility contingencies. The study also examined the import / export power flows between adjacent systems.

The results of the study conclude that with the additional generating capacity of NMP3NPP, the transmission system remains stable under the analyzed conditions, preserving the grid connection, and supporting the normal and shutdown requirements of NMP3NPP. During certain maintenance outages the output of the unit will need to be limited due to instability. The most restrictive output limitation is during an outage of 345 kV NMPNS to Clay line.

The study determined that modifications to the existing substations are required. The loading capacities of the Scriba-Volney 345 kV transmission lines and the NMP3NPP Clay transmission line are upgraded, consistent with this study. These modifications, along with other modifications identified in subsequent studies, will be completed prior to initial fuel loading.

© 2008 UniStar Nuclear Services, LLC. All rights reserved.
COPYRIGHT PROTECTED

A system voltage study was performed to determine that maximum and minimum voltage that switchyard can maintain without any reactive support for NMP3NPP. This study was prepared using the same reliability planning criteria as was used in the load flow and stability study.

The computer analysis was performed using the Siemens PSS/E Software. The load flow analysis included the station service loads and multiple system contingencies.

The results of the study conclude that the new NMP3NPP substation 345 kV bus will operate within an acceptable voltage range to satisfy U.S. EPR FSAR requirements with NMP3NPP at zero reactive power output.

The U.S. EPR FSAR states that the plant will operate with a transmission system operating voltage range of ±10%. The transmission system supports the U.S. EPR FSAR voltage limits.

Based on the results of the impact study the grid will not be lost due to the loss of the largest generating unit (i.e., NMP3NPP) or the loss of the most critical transmission line or the loss of the largest load on the grid. The design (i.e., tap range & bus regulation voltage setting) of the on-load tap changers for each EAT will ensure that the downstream EPSS 6.9 kV buses will have sufficient voltage to preclude the degraded voltage protection scheme from separating the buses from the preferred power source as described in the Section 8.3.1.1.3. A site specific system calculation will be performed to confirm the design. (See Chapter 16, Technical Specifications, Section 3.3.1, for specific degraded grid voltage protection settings.)

Grid availability in the region over the past 11.5 years was also examined and it was confirmed that the system has been highly reliable with minimal forced outages. During these component outage occurrences, the transmission grid as a whole has remained available for 99.95% of the time, with a total of 27 forced outages in the 11.5 year period. Almost half of the outages were momentary and automatic. Three of the outages were manual emergency outages.

The NG grid is maintained at 60Hz. During a system underfrequency condition, the NPCC utilizes an automatic load shedding scheme.

Historic data of transient frequency events on the Eastern Interconnection provided by NYISO indicates that no transient frequency events have occurred that would subject the NMP3NPP reactor coolant pumps to a sustained frequency event in recent history occurred on 3.5 Hz/sec or greater. The largest frequency event in recent history occurred on August 04, 2007 and was caused by the loss of almost 4000 MW in the Midwest. This caused a decay of 116 mHz over approximately 14 seconds (0.008 Hz/sec). The steepest decay rate observed over the 14 second period was 0.036 Hz/sec.

Failure Mode and Effects Analysis

A failure mode and effects analysis (FMEA) of the switchyard components has been performed to assess the possibility of simultaneous failure of both circuits for NMP3NPP as a result of single events, such as a breaker not operating during fault conditions, a spurious relay trip, a loss of a control circuit power supply, or a fault in a switchyard bus or transformer. This FMEA supplements the FMEA described in U.S. EPR FSAR Section 8.2.2.4.

The 345 kV components addressed in this FMEA are as follows and a summary of the results of this FMEA is presented below.

- Transmission System

© 2008 UniStar Nuclear Services, LLC. All rights reserved.
COPYRIGHT PROTECTED

- Transmission Line Towers
- Transmission Line Conductors
- Switchyard
- Circuit Breakers
- Disconnect Switches

Transmission System Failure Mode Evaluation

The off-site power system is comprised and built with sufficient capacity and capability to assure that design limits and design conditions, relative to the off-site power system, maintain their function in the event of a postulated accident.

The transmission system associated with the NMP3NPP is designed and constructed so that no loss of off-site power to the 345 kV switchyard is experienced with the occurrence of any of the following events:

- Loss of one transmission circuit.
- Loss of a generator.
- A three phase fault occurring on any transmission circuit which is cleared by primary or backup relaying.

The off-site electric power system supplies at least two preferred power circuits, which will be physically independent and separate. These lines are located to minimize the likelihood of simultaneous failure under operating, postulated accident, and postulated adverse environmental conditions. The preferred circuits are maintained and connected to the NMP3NPP MSU transformer via the NMP3NPP switchyard.

Transmission Line Tower Failure Mode Evaluation

The new 345 kV towers will be designed and constructed using a transmission tower design providing clearances consistent with the National Electrical Safety Code and NG engineering standards. All existing towers are grounded with either ground rods or a counterpoise ground system. All new transmission line towers will be constructed and grounded using the same methods.

Failure of any one tower or failure of any components within the tower structure, due to structural failure can at most disrupt and cause a loss of power distribution to only those circuits on the tower. The spacing of the towers between adjacent power circuits is designed to account for the collapse of any one tower.

Therefore, one of the preferred sources of power remains available for this failure mode in order to maintain the containment integrity and other vital functions in the event of a postulated accident.

Transmission Line Conductors Failure Mode Evaluation

The new transmission lines will have conductors sized to accommodate the load as a result of NMP3NPP.

© 2008 UniStar Nuclear Services, LLC. All rights reserved.
COPYRIGHT PROTECTED

All new 345 kV NMP3NPP transmission lines will be constructed to provide clearances consistent with the National Electrical Safety Code and NG engineering standards. At a minimum, all clearances for high voltage conductors above grade would be equal to or exceed present clearance minimums. High voltage conductor span lengths are engineered to establish the required installation guidelines and tensions for each line. All transmission lines crossing roads and railroads comply with the National Electrical Safety Code and NG engineering standards. The new transmission lines are configured to preclude the crossing of other transmission lines.

Failure of a line conductor would cause the loss of one preferred source of power but not more than one. Therefore, a minimum of one preferred sources of power remains available for this failure mode in order to maintain the containment integrity and other vital functions in the event of a postulated accident.

Switchyard Failure Mode Evaluation

As indicated in Figure 8.2-2, a breaker-and-a-half/double breaker scheme is incorporated in the design of the 345 kV switchyard at NMP3NPP. The 345 kV equipment, in the NMP3NPP switchyard, is all rated and positioned within the bus configuration according to the following criteria in order to maintain load flow incoming and outgoing from the unit.

- Equipment continuous current ratings are chosen such that no single contingency in the switchyard (e.g., a breaker being out of for maintenance) can result in current exceeding 100% of the continuous current rating of the equipment.
- Interrupting duties are specified such that no faults occurring on the system exceed the equipment rating.
- Momentary ratings are specified such that no fault occurring on the system exceeds the equipment momentary rating.
- Voltage ratings are specified to be greater than the maximum expected operating voltage.

The breaker-and-a-half/double breaker switchyard arrangement offers the following flexibility to control a failed condition within the switchyard.

- Any faulted transmission line into the switchyard can be isolated without affecting any other transmission line.
- Either bus can be isolated without interruption of any transmission line or other bus.
- Each battery charger is connected to a separate 480 VAC distribution panel board located in the 345 kV switchyard control house.
- A primary and secondary relaying system is included on each of the four 345 kV transmission circuits from the 345 kV switchyard to the NG grid. All relay schemes used for protection of the off-site power circuits and the switching station equipment include primary and backup protection features. All breakers are equipped with dual trip coils. Each protection circuit which supplies a trip signal is connected to a separate trip coil.

© 2008 UniStar Nuclear Services, LLC. All rights reserved.
COPYRIGHT PROTECTED

- Instrumentation and control circuits of the main power off-site circuit (i.e., normal preferred power circuit) are separated from the instrumentation and control circuits for the reserve power circuit (i.e., alternate preferred power circuit)

- The current input for the primary and secondary transmission circuit relaying systems is supplied from separate sets of circuit breaker bushing current transformers. The potential input for the primary and secondary transmission circuit relaying systems is supplied from fused branch circuits originating from a set of coupling capacitor potential devices connected to the associated transmission circuit. The control power for the primary and secondary transmission circuit relaying systems is supplied from separate 125 VDC systems.

- A primary and secondary relay system is included for protection of each of the 345 kV switchyard buses. The zone of protection of each 345 kV bus protection system includes all the 345 kV circuit breakers adjacent to the protected bus. The primary relay is the instantaneous high impedance type used for bus protection to detect both phase and ground faults. This relay is connected in conjunction with auxiliary relays and pilot wire relaying to form a differential protection, instantaneous auxiliary tripping, and transferred tripping relay system. The secondary relay system is a duplicate of the primary relay system.

- The current input for the primary and secondary 345 kV bus relaying systems is supplied from separate sets of 345 kV circuit breaker bushing current transformers. The control power for the relay terminals of the primary and secondary 345 kV bus relaying systems located in the 345 kV switchyard control house is supplied from separate 125 VDC systems.

- A primary and secondary relay system is included on each of the circuits connecting the MSU transformer, EATs and the NATs to their respective 345 kV switchyard position. The zone of protection of each of the Main Power Transformers (MPTs) circuit protection system includes two associated circuit breakers at the 345 kV switchyard and the high side bushings of the MSU transformer. The secondary relay system is a duplicate of the primary relay system.

- The current input for the primary and secondary MSU transformer, EATs and the NATs circuit relaying systems are supplied from separate sets of 345 kV circuit breaker bushing current transformers, MSU, EATs and the NATs transformer bushing current transformers. The control power for the relay terminals of the primary and secondary MSU circuit relaying systems located in the 345 kV switchyard control house are supplied from separate 125 VDC systems. The control power for the relay terminals of the primary and secondary MSU, EATs and NATs circuit relaying systems located at the unit relay room are supplied from the respective unit non-Class 1E 125 VDC battery systems.

- Spurious relay operation within the switchyard that trips associated protection system will not impact any primary or backup system.

Therefore, a minimum of one preferred source of power remains available for this failure mode in order to maintain the containment integrity and other vital safety functions in the event of a postulated accidents.

© 2008 UniStar Nuclear Services, LLC. All rights reserved.
COPYRIGHT PROTECTED

Circuit Breakers Failure Mode Evaluation

As indicated in Figure 8.2-2, a breaker-and-a-half/double breaker scheme is incorporated in the design of the 345 kV switchyard for NMP3NPP. The 345 kV equipment in the NMP3NPP switchyard is rated and positioned within the bus configuration according to the following criteria in order to maintain load flow incoming and outgoing from the units:

- Circuit breaker continuous current ratings are chosen such that no single contingency in the switchyard (e.g., a breaker being out for maintenance) will result in a load exceeding 100% of the nameplate continuous current rating of the breaker.
- Interrupting duties are specified such that no fault occurring on the system, operating in steady-state conditions will exceed the breaker's nameplate interrupting capability.
- Any circuit breaker can be isolated for maintenance or inspection without interruption of any transmission line or bus.
- A fault in a tie breaker or failure of the breaker to trip for a line or generator fault results only in the loss of its two adjacent circuits until it can be isolated by disconnect switches.
- A fault in a bus side breaker or failure of the breaker to trip for a line fault results only in the loss of the adjacent circuits and the adjacent bus until it can be isolated by disconnect switches.

In addition to the above described 345 kV switchyard for NMP3NPP relaying systems, each of the 345 kV circuit breakers has an associated circuit breaker failure relaying system. A circuit breaker failure scheme is provided in the unlikely event a circuit breaker fails to trip. If a breaker fails to open coincident with a line fault, tripping of all breakers adjacent to the failed breaker will occur. If the failed breaker is the center breaker, then only the remaining bus breaker will trip resulting in the undesired loss of the other line in the bay. If the failed breaker is a bus breaker then all breakers connected to the same bus will be tripped. Assuming all bus and center breakers are normally closed, the remaining bus will continue to supply all line elements.

The primary and secondary relaying systems of the 345 kV switchyard for NMP3NPP are connected to separate trip circuits in each 345 kV circuit breaker. The control power provided for the 345 kV switchyard primary and secondary relaying protection and breaker control circuits consists of two independent 125 VDC systems.

Disconnect Switch(s) Failure Mode Evaluation

All 345 kV disconnect switches have a momentary rating higher than the available short circuit level. The disconnect switches are implemented into the switchyard configuration to isolate main power circuits that have failed or are out for maintenance. A failure of the disconnect switch results only in the loss of the circuit in which it is connected.

Therefore, a minimum of one preferred source of power remains available for this failure mode in order to maintain the containment integrity and other vital functions in the event of a postulated accident.

FMEA Conclusion

The finding of this FMEA analysis is that there are no single failures which would cause the simultaneous failure of both preferred sources of off-site power.}

© 2008 UniStar Nuclear Services, LLC. All rights reserved.
COPYRIGHT PROTECTED

8.2.2.5 Compliance with GDC 18

The U.S. EPR FSAR includes the following COL Item in Section 8.2.2.5:

> A COL applicant that references the U.S. EPR design certification will provide site-specific information for the station switchyard equipment inspection and testing plan.

This COL Item is addressed as follows:

{NMP3NPP shall establish an interface agreement that defines the interfaces and working relationships between various NMPNS site organizations and NG to ensure the off-site power design requirements for the transmission facilities are maintained. The agreement defines the necessary requirements for maintenance, calibration, testing and modification of transmission lines, switchyards, and related equipment. The NMP Unit 1 and Unit 2, NMP3NPP, and NG are responsible for maintaining these facilities.

For performance of maintenance, testing, calibration and inspection, NG follows its own field test manuals, vendor manuals and drawings, industry's maintenance practices and observes Federal Energy Regulatory Commission (FERC) requirements.

Transmission line inspections and any resultant maintenance are performed on a periodic basis. As a result of these inspections any required maintenance is then performed for any of the structural/conductor components.

Multiple levels of inspection and maintenance are performed on the NMP3NPP switchyards, as well as other substation facilities. This inspection and maintenance is as follows.

- Walk-throughs and visual inspections of each substation facility including, but not limited to, reading and recording of equipment counters and meters, site temperature and conditions, and equipment condition.
- Protective relay system testing including: visual inspection, calibration, verification of current and potential inputs, functional trip testing, and correct operation of relay communication equipment.
- Oil sampling of large power transformers. Oil samples are evaluated through the use of gas chromatography and dielectric breakdown analysis.
- Several levels of inspection and maintenance for power circuit breakers. The frequency of each is a function of the number of operations and the length of time in service. Maintenance leverages the use of external visual inspection of all functional systems, an external test, and an internal inspection. Frequency of the various maintenance/inspection efforts is based on a combination of operating history of the type of breaker, industry practice and manufacturer's recommended maintenance requirements.
- Thermography is used annually to identify potential thermal heating issues on buses, conductors, connectors and switches.
- Annual maintenance of battery systems is performed, including quarterly visual inspections, verification of battery voltage, and verification of electrolyte level.}

© 2008 UniStar Nuclear Services, LLC. All rights reserved.
COPYRIGHT PROTECTED

8.2.2.6 Compliance with GDC 33, GDC 34, GDC 35, GDC 38, GDC 41, and GDC 44

No departures or supplements.

8.2.2.7 Compliance with 10 CFR 50.63

The U.S. EPR FSAR includes the following COL Item in Section 8.2.2.7:

> A COL applicant that references the U.S. EPR design certification will provide site-specific information that identifies actions necessary to restore offsite power and use available nearby power sources when offsite power is unavailable.

This COL Item is addressed as follows:

{NMP3NPP} includes two redundant SBO diesel generators designed in accordance with 10 CFR 50.63 (CFR, 2008) and Regulatory Guide 1.155 (NRC, 1988). As such, reliance on additional offsite power sources as an alternate AC source is not required. {There are no special local power sources that can be made available to re-supply the plant following a loss of the off-site power grid or an SBO. However, actions necessary to restore off-site power are identified as part of the procedures and training provided to plant operators for an SBO event described in response to the COL Item in Section 8.4.2.6.4.}

8.2.2.8 Compliance with 10 CFR 50.65(a)(4)

No departures or supplements.

8.2.2.9 Compliance with Branch Technical Position 8-3

No departures or supplements.

8.2.2.10 Compliance with Branch Technical Position 8-6

No departures or supplements.

8.2.3 REFERENCES

{**CFR, 2008.** Loss of All Alternating Current Power, Title 10, Code of Federal Regulations, Part 50.63, U.S. Nuclear Regulatory Commission, 2008.

IEEE, 2000. IEEE Standard for AC High-Voltage Circuit Breakers on a Symmetrical Current Basis – Preferred Ratings and Related Required Capabilities, IEEE Std. C37.06-2000, Institute of Electrical and Electronics Engineers, 2000.

NRC, 1988. Station Blackout, Regulatory Guide 1.155, U.S. Nuclear Regulatory Commission, August 1988.

NYISO, 1999. Transmission Expansion and Interconnection Manual, New York Independent System Operator, available online: http://www.nyiso.com/public/webdocs/documents/manuals/planning/tei_mnl.pdf, accessed September 25, 2008.

NYISO, 2008a. System Impact Study, NYISO, September 2008.

NYISO, 2008b. System Voltage Study, NYISO, September 2008.}

© 2008 UniStar Nuclear Services, LLC. All rights reserved.
COPYRIGHT PROTECTED

Table 8.2-1—{NG Transmission System Circuits Connected to the NMP3NPP Site}

Termination	Nominal Voltage	Thermal Capacity	Approximate Length
Scriba Switchyard	345 kV	1282 MVA	0.4 mi (0.6 km)
Clay Switchyard	345 kV	1728 MVA	26.47 mi (km)
NMP Unit 1 Switchyard	345 kV	1728 MVA	0.7 mi (1.1 km)

© 2008 UniStar Nuclear Services, LLC. All rights reserved.
COPYRIGHT PROTECTED

Figure 8.2-1—{NMP3NPP 345kV Switchyard and Transmission Line Layout}

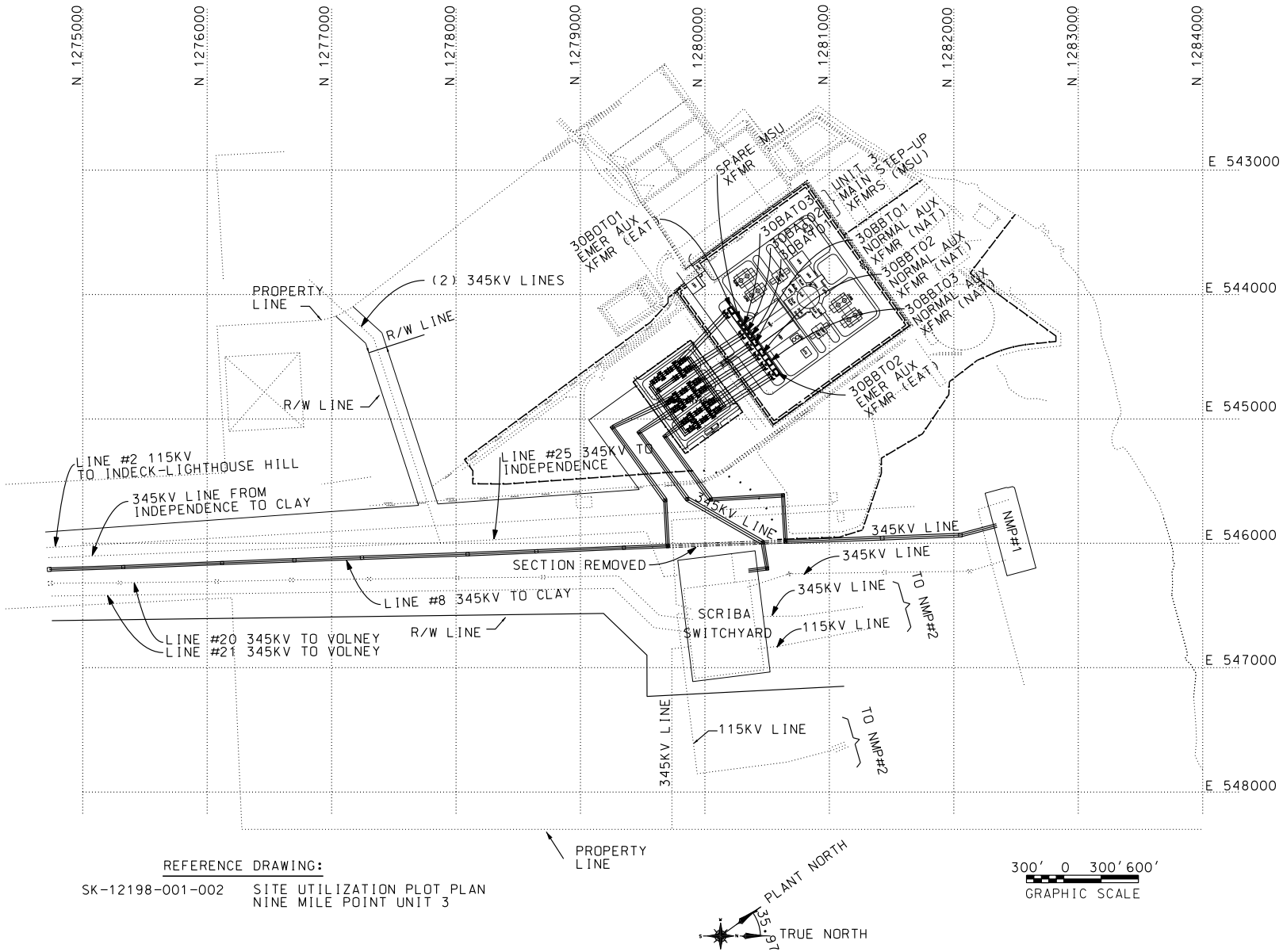

© 2008 UniStar Nuclear Services, LLC. All rights reserved.
COPYRIGHT PROTECTED

Figure 8.2-2—{NMP3NPP New 345kV Swithchyard Single Line Diagram}

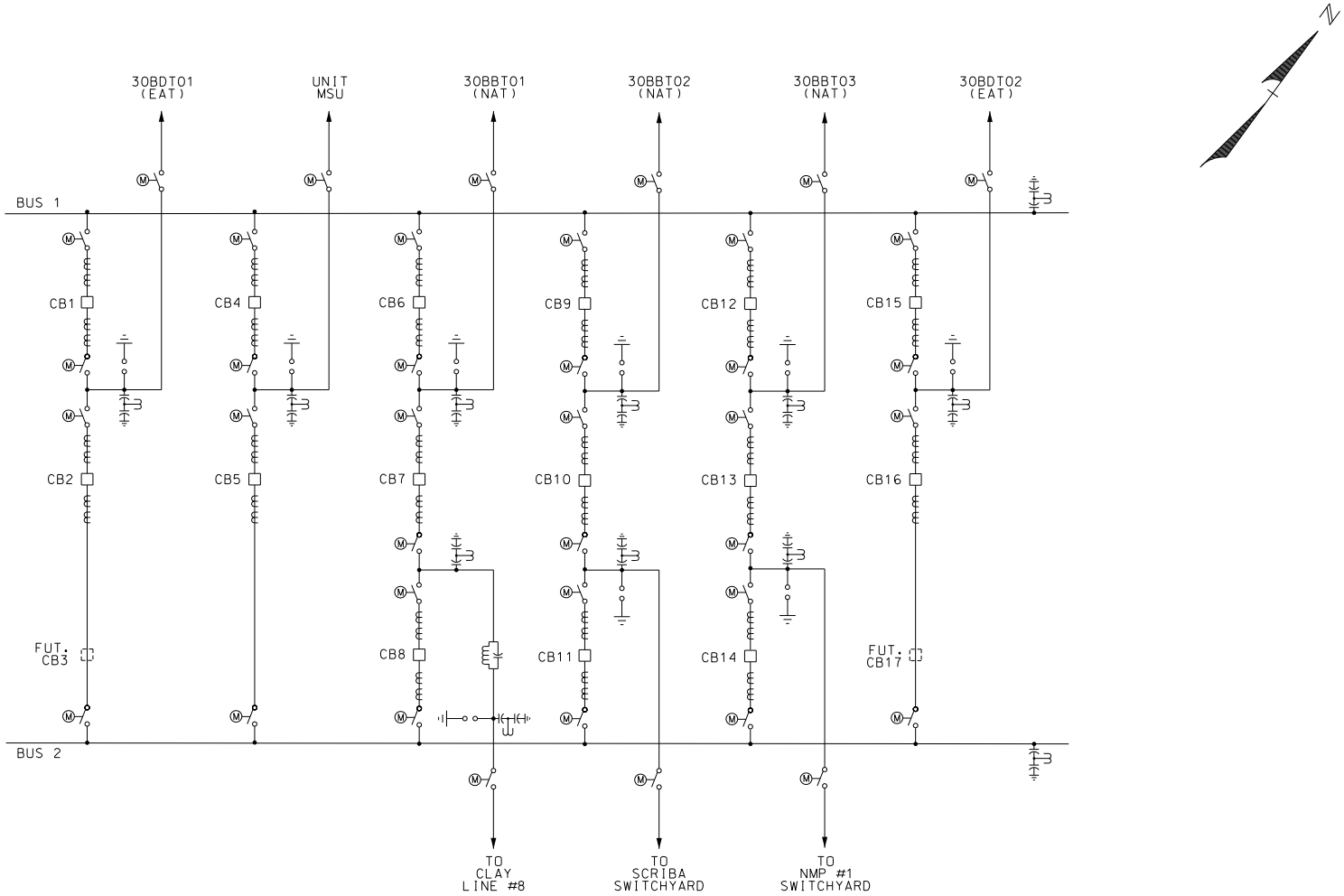

© 2008 UniStar Nuclear Services, LLC. All rights reserved.
COPYRIGHT PROTECTED

Figure 8.2-3—{NMP3NPP New 345kV Swithchyard Plan}

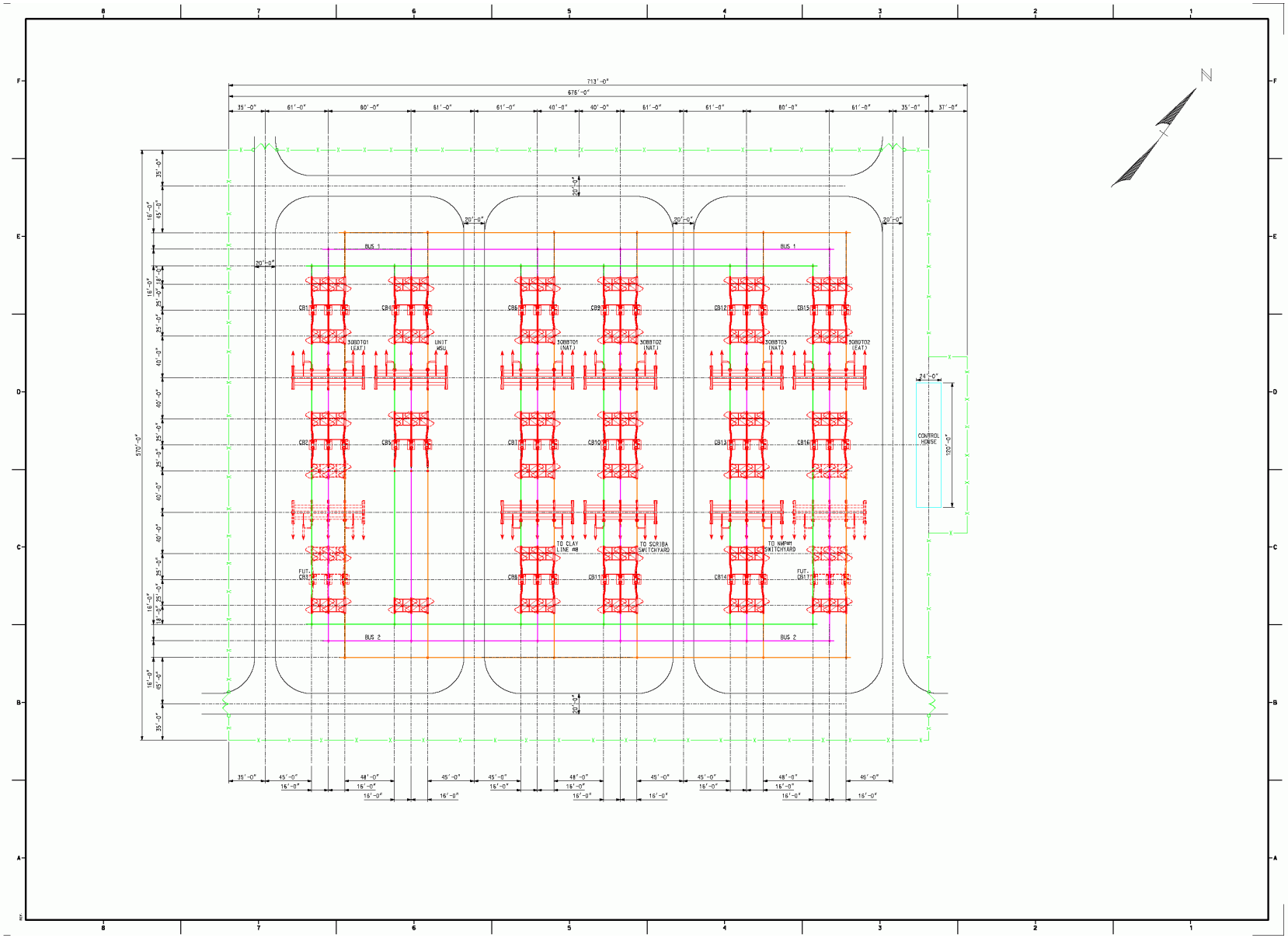

© 2008 UniStar Nuclear Services, LLC. All rights reserved.
COPYRIGHT PROTECTED

8.3 ONSITE POWER SYSTEM

This section of the U.S. EPR FSAR is incorporated by reference with the following supplements.

8.3.1 ALTERNATING CURRENT POWER SYSTEMS

8.3.1.1 Description

Additional site-specific loads powered from the station EDGs are specified in Table 8.1-1, Table 8.1-2, Table 8.1-3, and Table 8.1-4. These tables supplement the information provided in U.S. EPR FSAR Tables 8.3-4, 8.3-5, 8.3-6, and 8.3-7.

{Figure 8.3-1 through Figure 8.3-7} provide the site-specific modifications to the Emergency and Normal Power Supply Systems Single Line Diagrams. This information supplements U.S. EPR FSAR Figures 8.3-2 and 8.3-3. The site-specific load analysis is provided in Section 8.1.3.

Table 8.3-1 identifies the nominal ratings for the site-specific AC power system main components. This information supplements U.S. EPR FSAR Table 8.3-1.

8.3.1.1.1 Emergency Power Supply System

{The following site-specific information is provided as a supplement to the information provided in Section 8.3.1.1.1 of the U.S. EPR FSAR.

There are four divisions of Emergency Power Supply System (EPSS) distribution equipment for the UHS Makeup Water System. Each division of EPSS distribution equipment is located in the respective Seismic Category 1 Safeguards Building (SB), Essential Service Water Pump Building (ESWPB), UHS Intake Structure, or Diesel Generator Building, which provides physical separation from the redundant equipment. Each division of EPSS distribution equipment is located in the respective Seismic Category 1 Safeguards Building (SB), Essential Service Water Pump Building (ESWPB), UHS Intake Structure, or Diesel Generator Building, which provides physical separation from the redundant equipment}

The site-specific EPSS distribution switchgear and nominal bus voltages are shown in Table 8.3-2. This information supplements U.S. EPR FSAR Table 8.3-2.

8.3.1.1.2 Normal Power Supply System

{The site-specific Normal Power Supply System major distribution switchgear and nominal bus voltages are shown in Table 8.3-3. U.S. EPR FSAR Table 8.3-3 lists 480 V AC Load Centers 35BFB, 35BFC, and 35BFD for Train 5, and 480 V AC Load Centers 36BFB, 36BFC, and 36BFD for Train 6. These 480 V AC Load Centers are replaced in the site-specific design with 6.9 kV Switchgear 35BBE and 35BBF for Train 5 and 6.9 kV Switchgear 36BBE and 36BBF for Train 6. The standard cooling tower electrical distribution system is a conceptual design, and the changes are not considered a departure. The changes resulted from increasing the size of the cooling tower wet fans from 250 hp (each) to 350 hp (each).}

8.3.1.1.3 Electric Circuit Protection and Coordination

No departures or supplements.

8.3.1.1.4 Onsite AC Power System Controls and Instrumentation

No departures or supplements.

© 2008 UniStar Nuclear Services, LLC. All rights reserved.
COPYRIGHT PROTECTED

8.3.1.1.5 Standby AC Emergency Diesel Generators

The U.S. EPR FSAR includes the following COL Item in Section 8.3.1.1.5:

> A COL applicant that references the U.S. EPR design certification will monitor and maintain EDG reliability during plant operations to verify the selected reliability level target is being achieved as intended by RG 1.155.

This COL Item is addressed as follows:

{Nine Mile Point 3 Nuclear Project, LLC and UniStar Nuclear Operating Services} shall monitor and maintain EDG reliability to verify the selected reliability level goal of 0.95 is being achieved as intended by Regulatory Guide 1.155 (NRC, 1988).

8.3.1.1.6 Station Blackout Diesel Generators

No departures or supplements.

8.3.1.1.7 Electrical Equipment Layout

{The electrical distribution system components distribute power to safety-related and non-safety-related loads in the Reactor Building, Safeguards Buildings, Diesel Buildings, Essential Service Water Pump Buildings, Turbine Island, Fuel Building, Nuclear Auxiliary Building, Access Building, Cooling Water Structure, UHS Intake Structure, Circulating Water Intake Structure, Retention Basin Pump House, Waste Treatment Building, Switchyard, and Radioactive Waste Processing Building.

EPSS 6.9 kV switchgear, 480 Vac load centers, MCCs and distribution transformers, are located in electrical switchgear rooms in Seismic Category I buildings. The electrical equipment is located in the Safeguards Building, Essential Service Water Pump Building, UHS Intake Structure, or Diesel Building associated with its division.}

8.3.1.1.8 Raceway and Cable Routing

{The following site-specific information is provided as a supplement to the information provided in Section 8.3.1.1.8 of the U.S. EPR FSAR.

Each group is separated to the extent practical by placing the AC power distribution equipment in the divisional Safeguards Building, Essential Service Water Pump Building, UHS Intake Structure, and Diesel Building.}

8.3.1.1.9 Independence of Redundant Systems

{The following site-specific information is provided as a supplement to the information provided in Section 8.3.1.1.9 of the U.S. EPR FSAR. Redundant Class 1E switchgear, load centers and MCCs are located in their respective division Safeguards Building, Essential Service Water (ESW) Pump building, UHS Intake Structure, or Diesel Generator Building.}

8.3.1.1.10 Containment Electrical Penetrations

No departures or supplements.

8.3.1.1.11 Criteria for Class 1E Motors

No departures or supplements.

© 2008 UniStar Nuclear Services, LLC. All rights reserved.
COPYRIGHT PROTECTED

8.3.1.1.12 Overload Protection for Motor-Operated Safety-Related Valves

No departures or supplements.

8.3.1.1.13 Physical Identification of Safety-Related Equipment

No departures or supplements.

8.3.1.2 Analysis

No departures or supplements.No departures or supplements.

8.3.1.2.1 Compliance with GDC 2

No departures or supplements.

8.3.1.2.2 Compliance with GDC 4

No departures or supplements.

8.3.1.2.3 Compliance with GDC 5

No departures or supplements.

8.3.1.2.4 Compliance with GDC 17

{The following site-specific information is provided as a supplement to the information provided in Section 8.3.1.2.4 of the U.S. EPR FSAR. The affected information is located in an unnumbered subsection titled "Conformance with RG 1.75." Each EPSS division is located in an independent Seismic Category I Safeguards Building, Essential Service Water Pump Building, Diesel Building, or UHS Intake Structure which is physically separated into four divisions.}

8.3.1.2.5 Compliance with GDC 18

No departures or supplements.

8.3.1.2.6 Compliance with GDC 33, GDC 34, GDC 35, GDC 38, GDC 41, and GDC 44

No departures or supplements.

8.3.1.2.7 Compliance with GDC 50

No departures or supplements.

8.3.1.2.8 Compliance with 10 CFR 50.63

No departures or supplements.

8.3.1.2.9 Compliance with 10 CFR 50.65(a)(4)

No departures or supplements.

8.3.1.2.10 Compliance with 10 CFR 50.34 Pertaining to Three Mile Island Action Plan Requirements

No departures or supplements.

© 2008 UniStar Nuclear Services, LLC. All rights reserved.
COPYRIGHT PROTECTED

8.3.1.2.11 Branch Technical Positions

No departures or supplements.

8.3.1.3 Electrical Power System Calculations and Distribution System Studies for AC Systems

The U.S. EPR FSAR includes the following conceptual design information in Section 8.3.1.3:

Figure 8.3-4 [[Typical Station Grounding Grid]]

The conceptual design information is addressed as follows:

{The above U.S. EPR FSAR conceptual design information, including U.S. EPR FSAR Figure 8.3-4, is applicable to NMP3NPP}.

8.3.2 DC POWER SYSTEMS

No departures or supplements.

8.3.3 REFERENCES

{**NRC, 1988.** Station Blackout, Regulatory Guide 1.155, U.S. Nuclear Regulatory Commission, August 1988.}

© 2008 UniStar Nuclear Services, LLC. All rights reserved.
COPYRIGHT PROTECTED

Table 8.3-1—{NMP3NPP AC Power System Component Data Nominal Values}

Component	Nominal Ratings
EPSS Distribution Transformers 31BMT05, 32BMT05 33BMT05, 34BMT05	Dry Type 60 Hz, three phase, air cooled 6.9 kV to 480 V 500 kVA

© 2008 UniStar Nuclear Services, LLC. All rights reserved.
COPYRIGHT PROTECTED

Table 8.3-2—{NMP3NPP EPSS Switchgear, Load Center, and Motor Control Center Numbering and Nominal Voltage}

Nominal Voltage Level	Division	Switchgear / Load Center / Motor Control Center
480 V MCC	1	31BNG01[(1)]
480 V MCC	2	32BNG01[(1)]
480 V MCC	3	33BNG01[(1)]
480 V MCC	4	34BNG01[(1)]

Note:

(1) Equipment located in the respective division in the UHS Intake Structure.

© 2008 UniStar Nuclear Services, LLC. All rights reserved.
COPYRIGHT PROTECTED

Table 8.3-3—{NMP3NPP Normal Power Supply System Switchgear, Load Center, and Motor Control Center Numbering and Nominal Voltage}

Nominal Voltage Level	Train	Bus / Load Center(2)
6.9 kV Switchgear	5	35BBE(1), 35BBF(1)
6.9 kV Switchgear	6	36BBE(1), 36BBF(1)

Note:

(1) Equipment Located in the Circulating Water System Cooling Tower Area.
(2) U.S. EPR FSAR Table 8.3-3 lists 480 V AC Load Centers 35BFB, 35BFC, and 35BFD for Train 5, and 480 V AC Load Centers 36BFB, 36BFC, and 36BFD for Train 6. These 480 V AC Load Centers are replaced in the site-specific design with 6.9 kV Switchgear 35BBE and 35BBF for Train 5 and 6.9 kV Switchgear 36BBE and 36BBF for Train 6.

© 2008 UniStar Nuclear Services, LLC. All rights reserved.
COPYRIGHT PROTECTED

Figure 8.3-1—{Supplemental EPSS Single Line Drawing}

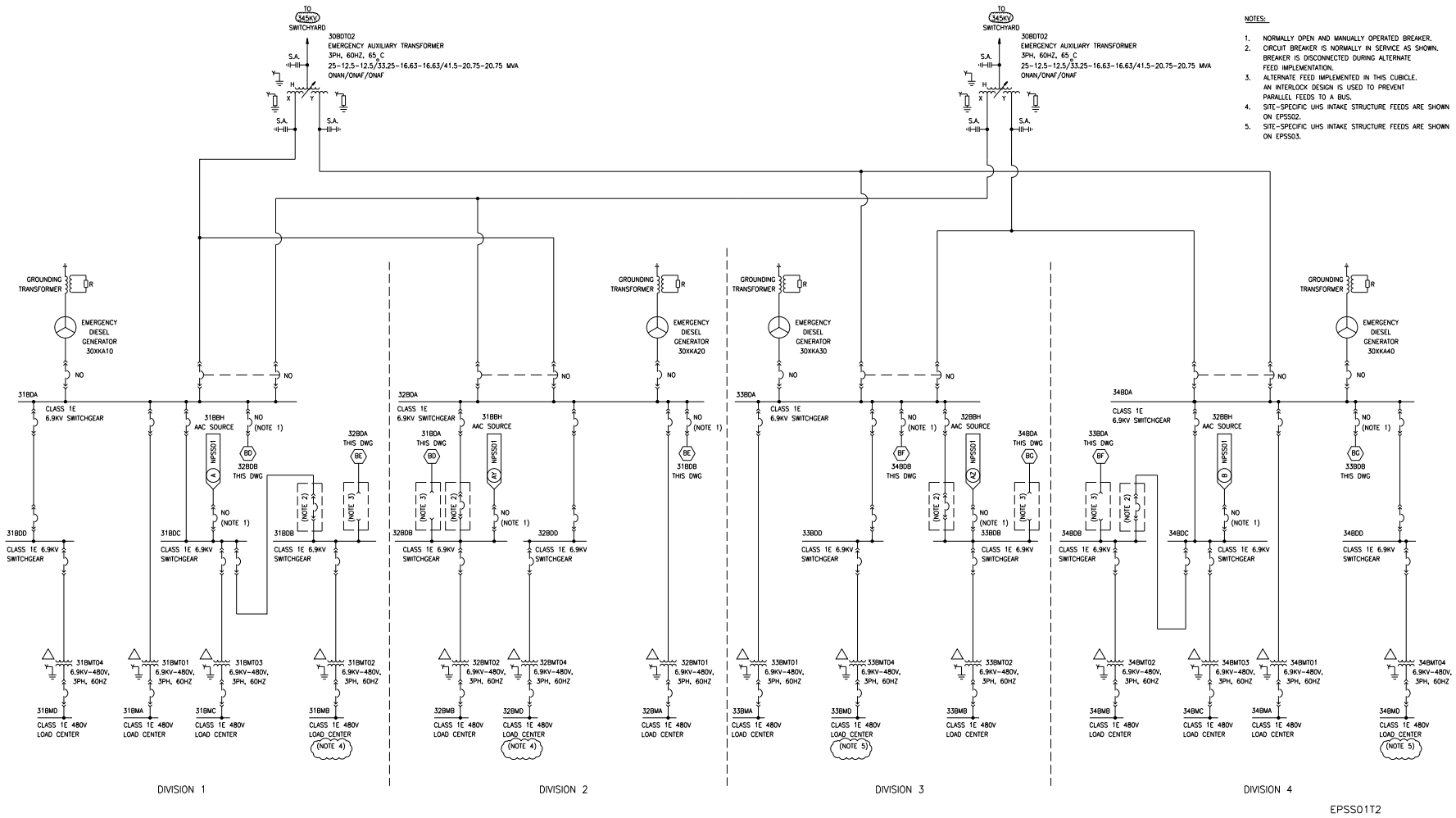

© 2008 UniStar Nuclear Services, LLC. All rights reserved.
COPYRIGHT PROTECTED

Figure 8.3-2—{Supplemental EPSS Single Line Drawing}

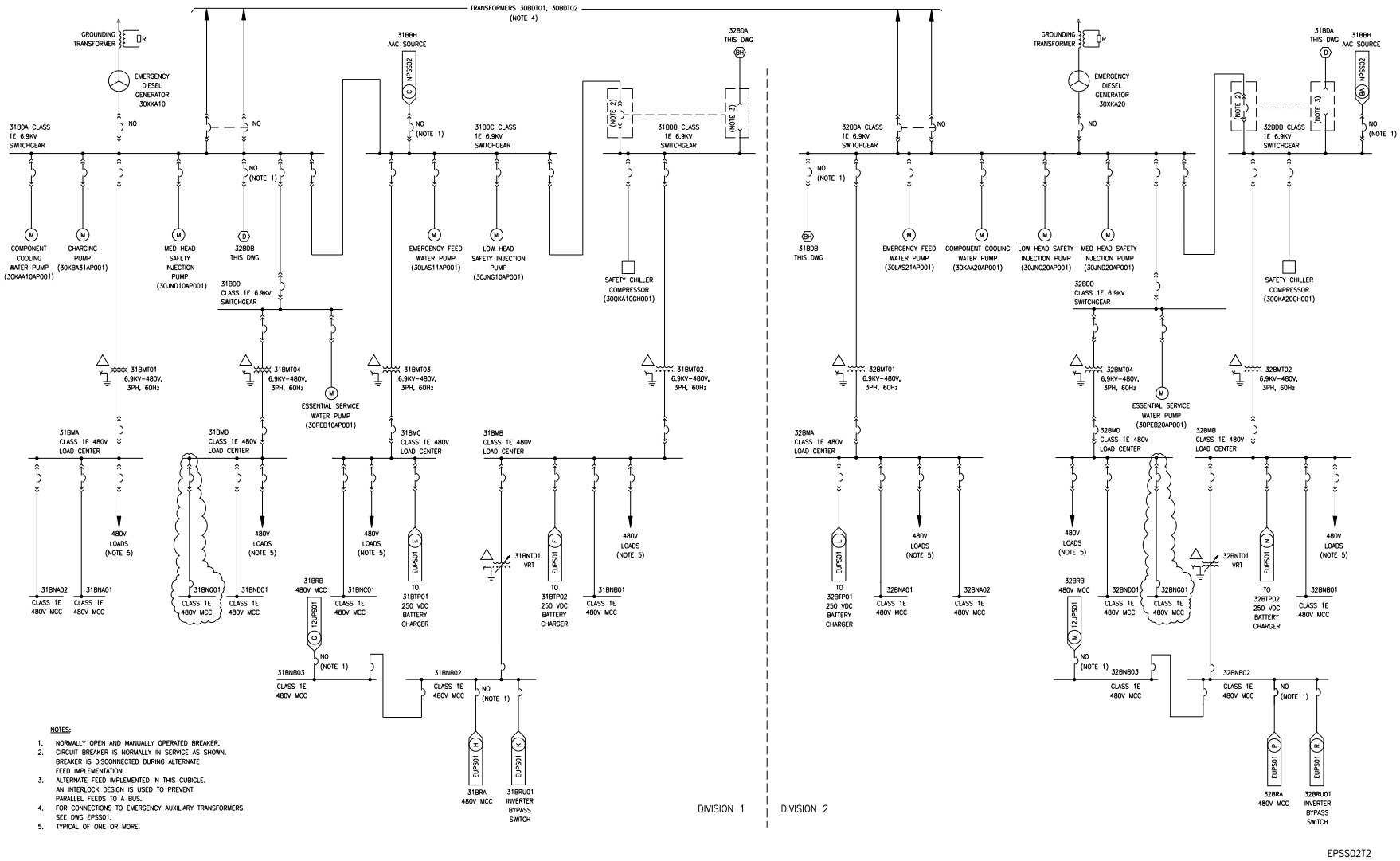

NOTES:

1. NORMALLY OPEN AND MANUALLY OPERATED BREAKER.
2. CIRCUIT BREAKER IS NORMALLY IN SERVICE AS SHOWN. BREAKER IS DISCONNECTED DURING ALTERNATE FEED IMPLEMENTATION.
3. ALTERNATE FEED IMPLEMENTED IN THIS CUBICLE. AN INTERLOCK DESIGN IS USED TO PREVENT PARALLEL FEEDS TO A BUS.
4. FOR CONNECTIONS TO EMERGENCY AUXILIARY TRANSFORMERS SEE DWG EPSS01.
5. TYPICAL OF ONE OR MORE.

© 2008 UniStar Nuclear Services, LLC. All rights reserved.
COPYRIGHT PROTECTED

Figure 8.3-3—{Supplemental EPSS Single Line Drawing}

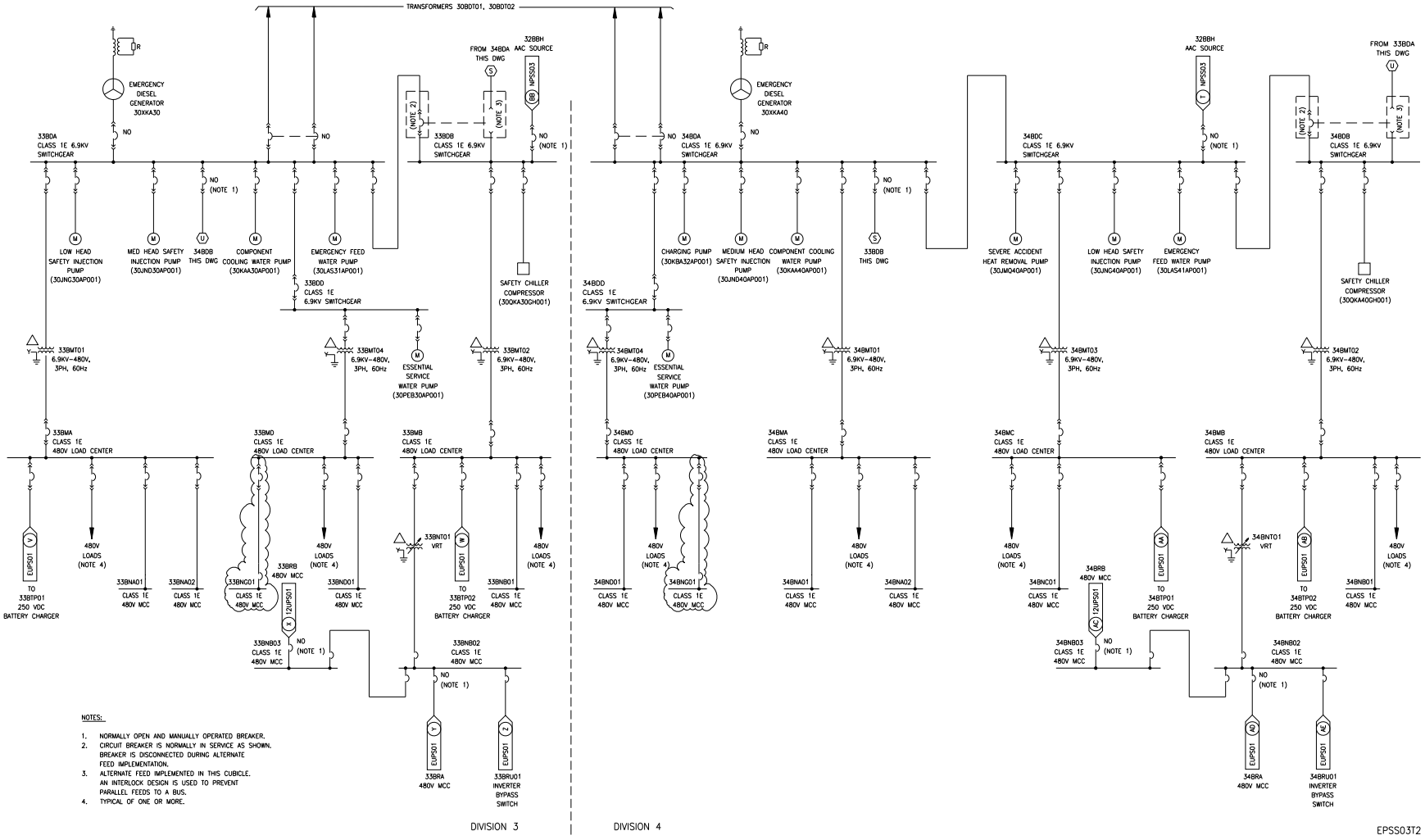

© 2008 UniStar Nuclear Services, LLC. All rights reserved.
COPYRIGHT PROTECTED

Figure 8.3-4—{Supplemental NPSS Single Line Drawing}

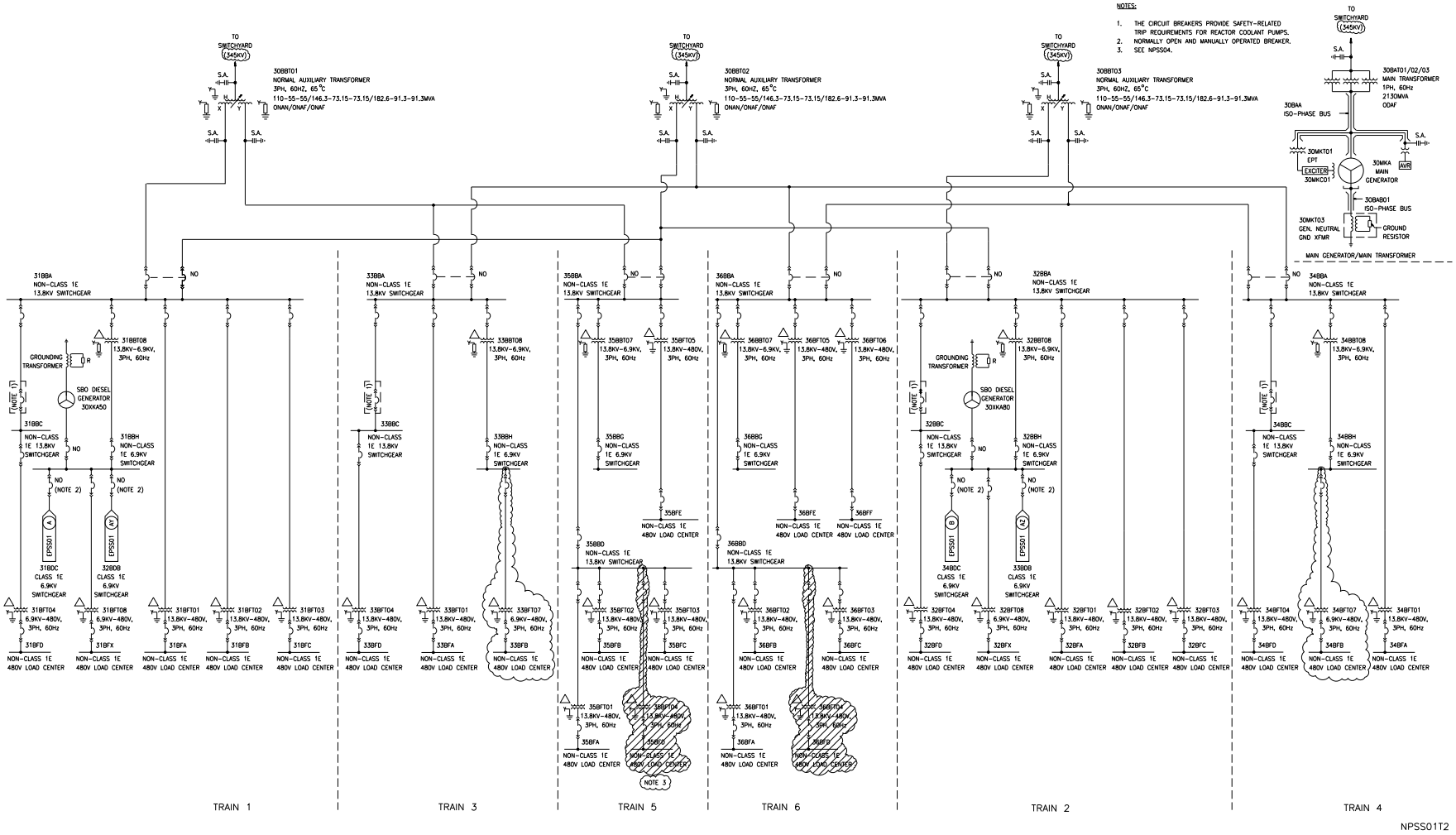

© 2008 UniStar Nuclear Services, LLC. All rights reserved.
COPYRIGHT PROTECTED

Figure 8.3-5—{Supplemental NPSS Single Line Drawing}

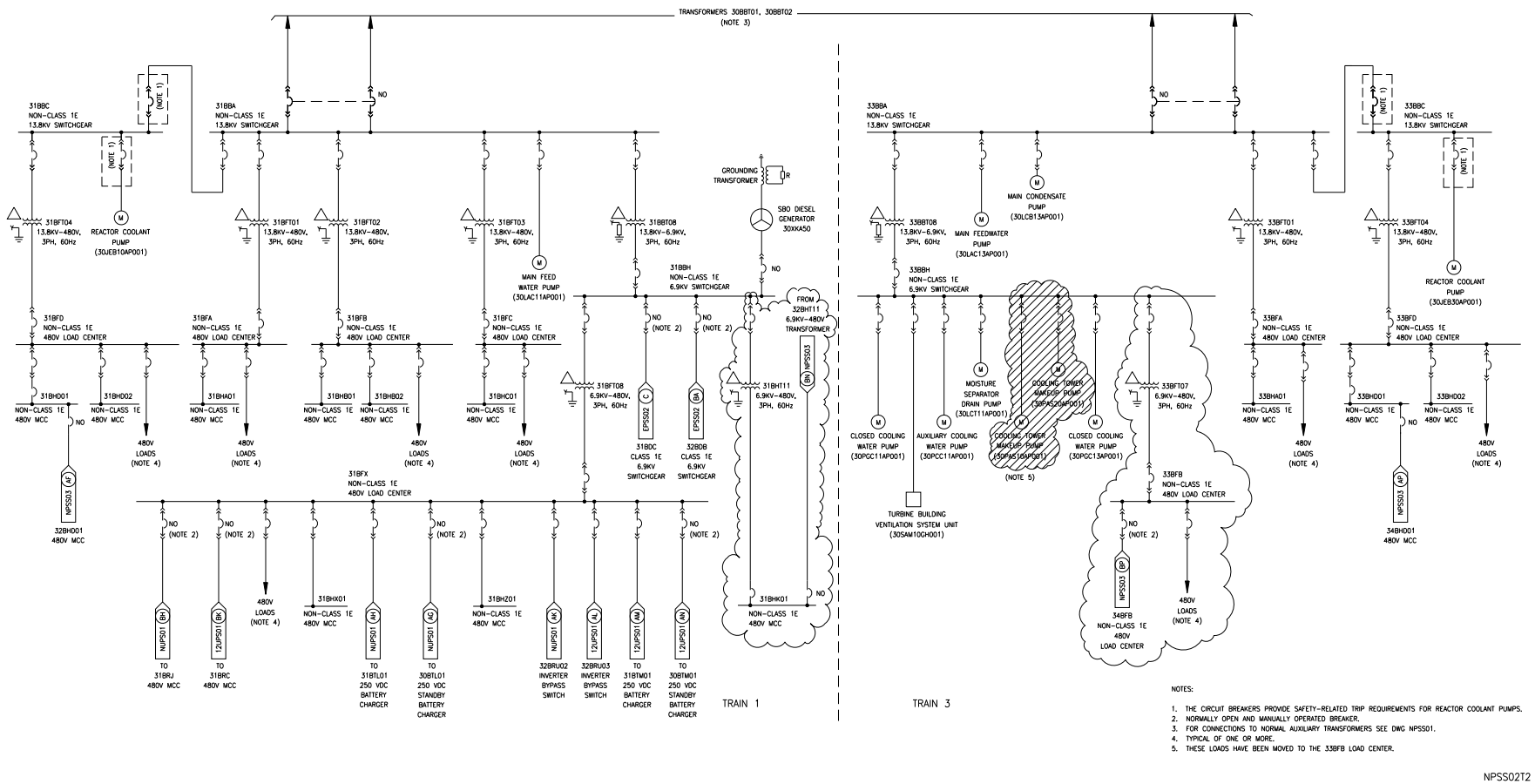

© 2008 UniStar Nuclear Services, LLC. All rights reserved.
COPYRIGHT PROTECTED

Figure 8.3-6—{Supplemental NPSS Single Line Drawing}

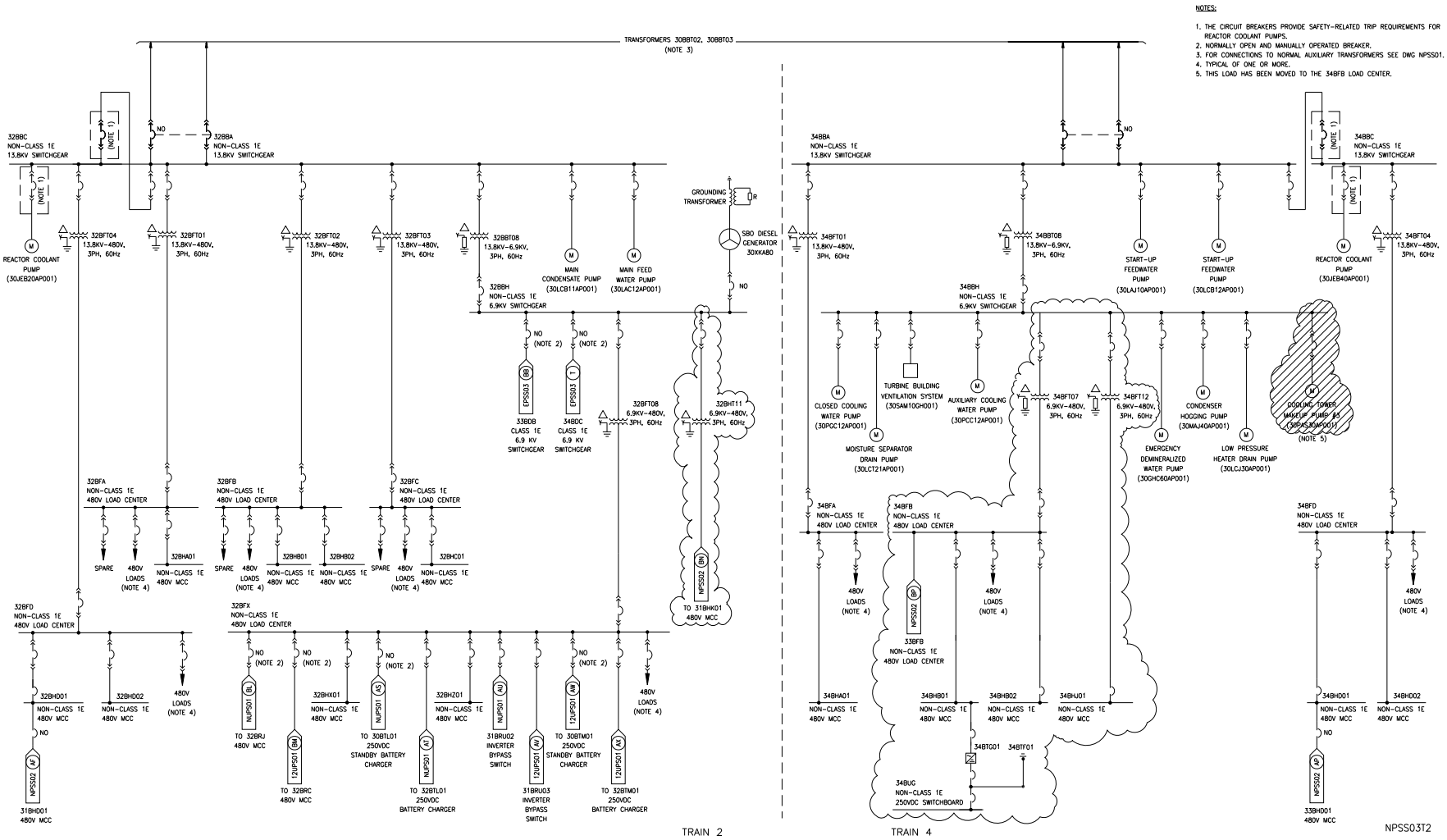

© 2008 UniStar Nuclear Services, LLC. All rights reserved.
COPYRIGHT PROTECTED

Figure 8.3-7—{Supplemental NPSS Single Line Drawing}

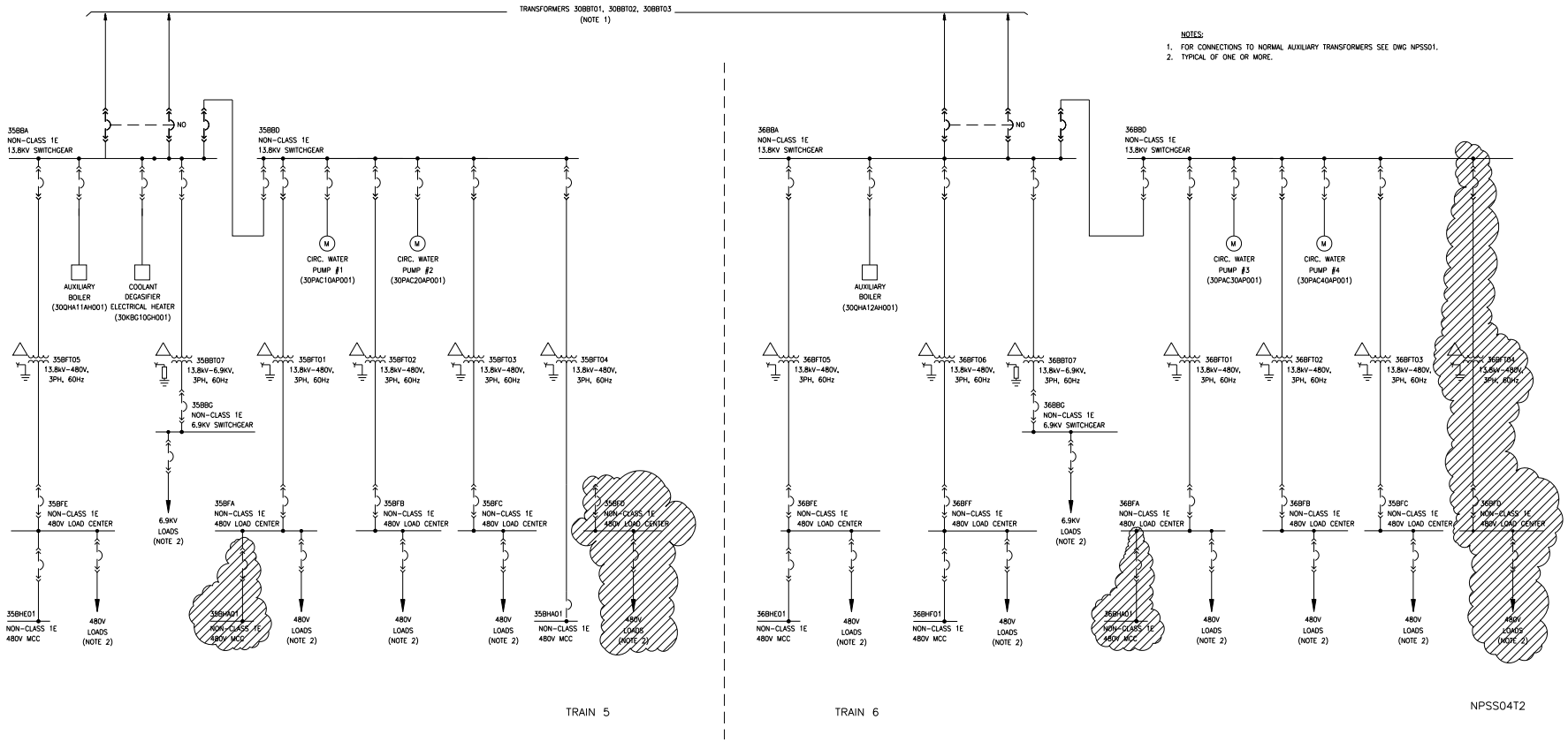

© 2008 UniStar Nuclear Services, LLC. All rights reserved.
COPYRIGHT PROTECTED

8.4 STATION BLACKOUT

This section of the U.S. EPR FSAR is incorporated by reference with the following supplements.

8.4.1 DESCRIPTION

No departures or supplements.

8.4.1.1 Station Blackout Diesel Generators

No departures or supplements.

8.4.1.2 Generator

No departures or supplements.

8.4.1.3 Alternate AC Power System Performance

The U.S. EPR FSAR includes the following COL Item in Section 8.4.1.3:

> A COL applicant that references the U.S. EPR design certification will provide site-specific information that identifies any additional local power sources and transmission paths that could be made available to resupply the power plant following a LOOP.

This COL Item is addressed as follows:

> {The NMP3NPP switchyard will be constructed immediately west of the existing Nine Mile Point Nuclear Station (NMPNS) site. The existing NMP Unit 1 to Clay Substation 345 kV power line will be intercepted and routed from Clay Substation to NMP3NPP. New power lines will be constructed between NMP3NPP and NMP Unit 1, and between NMP3NPP and Scriba substation. The existing Scriba substation adjacent to the NMPNS site includes 345 kV connections to the James A. Fitzpatrick Nuclear Power Plant (JAFNPP) and NMP Unit 1 and Unit 2, and also includes un-credited 115 kV connections to the JAFNPP and NMP Unit 2. Several other generation sources also exist in the Oswego area. The only credited transmission paths are the NMP Unit 1, Scriba, and Clay 345 kV power lines. There are no credited unique site-specific power sources that could be made available to re-supply power to the plant following a loss of a grid or SBO.
>
> The U.S. EPR FSAR Table 8.4.1-1 and Table 8.4.1-2 are incorporated by reference with the following supplemental information.
>
> The U.S. EPR FSAR Table 8.4.1-1 and Table 8.4.1-2 include a provision (450 kW per SBODG) for site-specific, non-Class 1E loads. Possible site-specific loads would have included security systems, emergency response equipment, and switchyard equipment. The site-specific loads identified for NMP3NPP are 100 kW per SBODG for emergency response organization equipment. Security systems will not be powered from the SBODGs. The switchyard control equipment has two backup power connections to buses supplied from the SBODGs; however, this equipment has a battery backup so that the switchyard does not require SBODG power during the minimum station blackout duration.}

8.4.1.4 Periodic Testing

No departures or supplements.

© 2008 UniStar Nuclear Services, LLC. All rights reserved.
COPYRIGHT PROTECTED

8.4.2 ANALYSIS

No departures or supplements.

8.4.2.1 10 CFR 50.2-Definitions and Introduction

No departures or supplements.

8.4.2.2 10 CFR 50.63-Loss of All Alternating Current Power

No departures or supplements.

8.4.2.3 10 CFR 50.65-Requirements for Monitoring the Effectiveness of Maintenance of Nuclear Power Plants

No departures or supplements.

8.4.2.4 Appendix A to 10 CFR 50, GDC for Nuclear Power Plants

No departures or supplements.

8.4.2.5 RG 1.9-Application Testing of Safety-Related Diesel Generators in Nuclear Power Plants-Revision 4

No departures or supplements.

8.4.2.6 RG 1.155-Station Blackout

No departures or supplements.

8.4.2.6.1 RG 1.155 C.3.1-Minimum Acceptable Station Blackout Duration Capability (Station Blackout Coping Duration)

{NMP3NPP and UniStar Nuclear Operating Services} utilize the coping analysis described in Section 8.4.2.6 of the U.S. EPR FSAR.

8.4.2.6.2 RG 1.155 C.3.2-Evaluation of Plant-Specific Station Blackout Capability (Station Blackout Coping Capability)

No departures or supplements.

8.4.2.6.3 RG 1.155 C.3.3-Modification to Cope with Station Blackout — AAC Power Sources

No departures or supplements.

8.4.2.6.4 RG 1.155 C.3.4-Procedures and Training to Cope with Station Blackout (Procedures and Training)

The U.S. EPR FSAR includes the following COL Item in Section 8.4.2.6.4:

> A COL applicant that references the U.S. EPR design certification will address the RG 1.155 position C.3.4 related to procedures and training to cope with SBO.

This COL Item is addressed as follows:

Procedures and training shall include the operator actions necessary to cope with a station blackout for at least the duration determined according to Regulatory Guide 1.155 (NRC, 1988),

© 2008 UniStar Nuclear Services, LLC. All rights reserved.
COPYRIGHT PROTECTED

Regulatory Position C.3.1, and shall include the operator actions necessary to restore normal decay heat removal once AC power is restored.

Procedures shall be integrated with the plant-specific technical guidelines and emergency operating procedure program, consistent with Supplement 1 to NUREG-0737 (NRC, 1982). The task analysis portion of the emergency operating procedure program shall include an analysis of instrumentation adequacy {to support operator action required} during a station blackout.

8.4.2.7 Quality Assurance

No departures or supplements.

8.4.3 REFERENCES

{**NRC, 1982.** Supplement to NUREG-0737-Requirements to Emergency Response Capability, Generic Letter 82-33, U.S. Nuclear Regulatory Commission, December 1982.

NRC, 1988. Station Blackout, Regulatory Guide 1.155, U.S. Nuclear Regulatory Commission, August 1988.}

© 2008 UniStar Nuclear Services, LLC. All rights reserved.
COPYRIGHT PROTECTED