# Revised TPBAR Content
# NAC-LWT Shipment

*March 17, 2009*

*NAC International is a Wholly Owned Subsidiary of USEC Inc., the World's Leading Supplier of Enriched Uranium Fuel for Commercial Nuclear Power Plants.*

NAC INTERNATIONAL

# TPBAR Amendment Application

NAC-LWT Legal Weight Truck

Spent Fuel Transport Cask

Docket #71-9225

# Content Conditions

- NAC-LWT currently authorized to transport the following TPBAR contents within a TPBAR basket:
  - **300 TPBARs in a Consolidation Canister**
  - **Up to 55 TPBARs (or segments) in a Waste Container**
- NAC to request authorization to ship up to 25 TPBARs in a PWR/BWR Rod Transport Canister (in 5x5 rod insert)
- Additional request to modify 5x5 rod insert for PWR/BWR transport canister for larger tube - allows transport of larger than single lattice position PWR guide tube or BWR water rod

# Transport Configuration for PWR/BWR Rod Transport Canister TPBAR Shipment

- Configuration uses TPBAR basket with slight (0.5 inch) reduction in bottom spacer
  (6.5-inch spacer versus 7.0-inch)
- TPBAR basket content:
  - PWR Insert
    - PWR/BWR Rod Transport Canister
      - Internal Spacer and Rod Insert
        - TPBARs

# PWR/BWR Rod Transport Canister Assembly

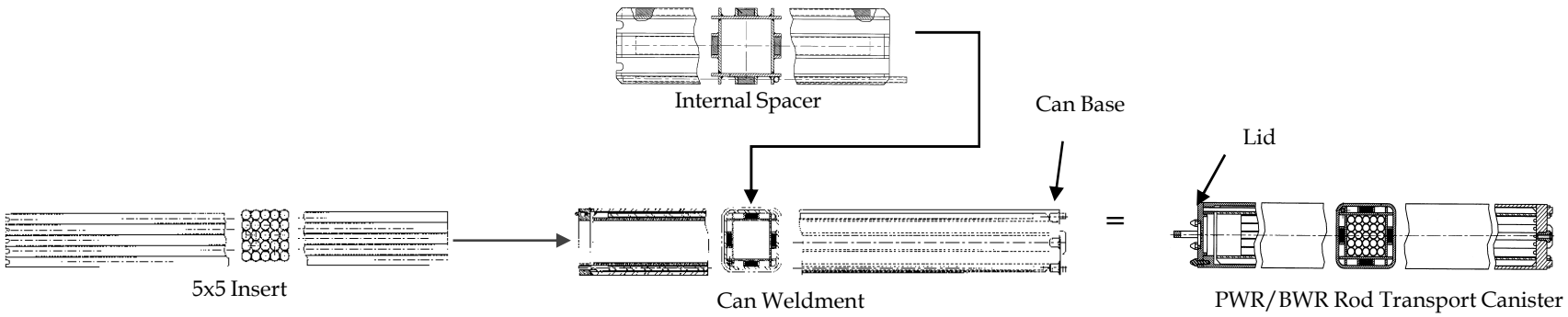


# PWR/BWR Rod Transport Canister with the TPBAR Basket Assembly

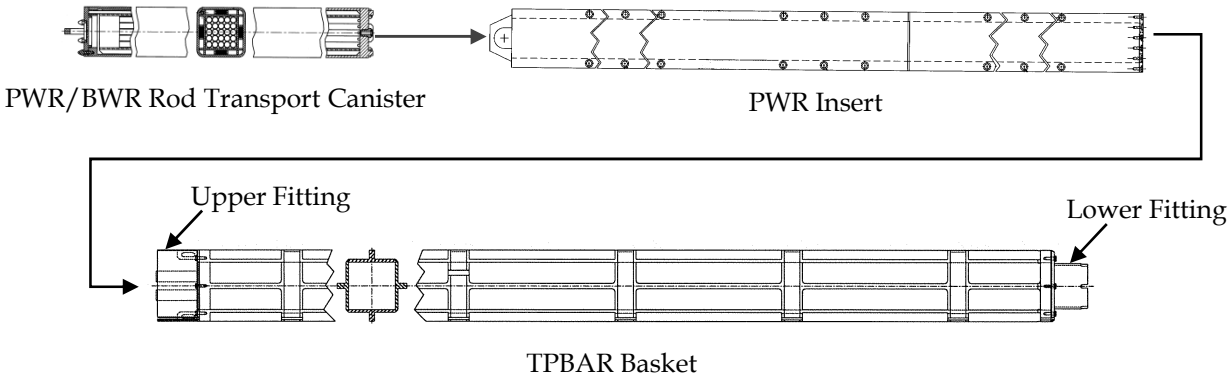

# Loaded NAC-LWT Configuration – TPBAR Basket and PWR/BWR Transport Rod Canister

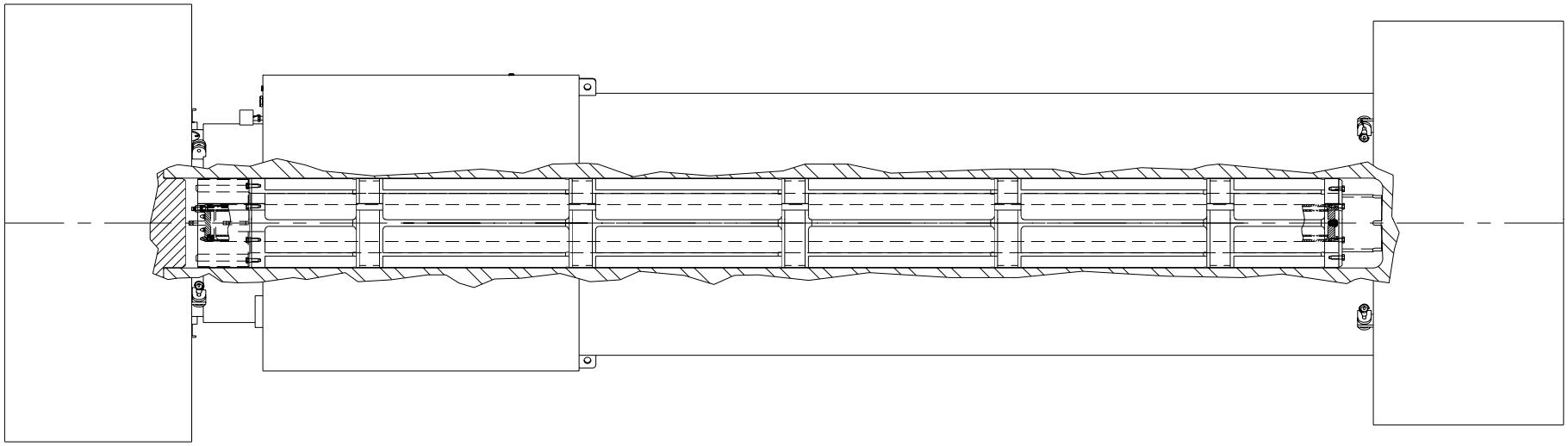

# Structural Considerations for PWR/BWR Rod Transport Canister TPBAR Shipment

- PWR high burnup rods with rod container shipment licensed in 2000
- Weight of PWR rod cask body contents bounds TPBARs cask body contents
  - for 25 PWR rods in container with PWR basket: 2,494 pounds
  - for 25 TPBARs in container with TPBAR basket: 1,901 pounds
- Weight applied to TPBAR basket is increased above previously evaluated load of 1,000 pounds (loaded consolidation canister weight of 978 lb)
  - Estimated weight of insert and loaded rod canister is 1,326 pounds
  - TPBAR basket structural calculation is revised to carry a1,650 lb load and FS is large
  - Minimum FS is 2.32 (normal condition)

NAC INTERNATIONAL

# Structural Considerations for PWR/BWR Rod Transport Canister TPBAR Shipment (Continued)

- TPBAR in PWR rod container shipment contents weight for cask body evaluation is 1,901 pounds as compared to the previous TPBAR cask body evaluation contents weight of 1,800 pounds
  - Minimum margin for TPBAR cask body stresses were revised ( by ratios) to account for minimal **101**-pound weight increase (empty cask weight is **47,208** pounds)
  - Pressure from TPBAR configuration (600 psi) combined with the increased weight (101 pounds) is used to show that the existing main cask lid bolt torque is still bounding

NAC INTERNATIONAL

# Thermal Considerations for PWR/BWR Rod Transport Canister TPBAR Shipment

- Heat load of 25 TPBARs is 58 Watts as compared to 2,500 Watts of the PWR high burnup rod configuration
- Thermal conduction differences within the rod transport container configuration is insignificant between TPBAR and PWR rods
- The TPBAR basket differs from the PWR basket which supports the rod transport container.
  - Fuel clad temperatures are revised to account for the rod container in the TPBAR basket using temperature results from the PWR high burnup model and the TPBAR basket model
    - Normal condition and fire accident condition
  - Maximum temperature of TPBAR is 234°F (normal) as compared to 290°F for the original TPBAR shipment
- Temperature margins are therefore increased

NAC INTERNATIONAL

# Containment Considerations for PWR/BWR Rod Transport Canister TPBAR Shipment

- Retain NAC-LWT leaktight (no credible leakage) configuration with metallic seals
- ANSI N.14.5-1997 leak testing invoked in current SAR operating procedures
- No changes to containment chapter and pressure section as previous configuration of 300 TPBARs bounds
  - No pressure increase due to 80% of system free volume is associated with the TPBAR basket cross section and pressurizing gases are reduced to 20% of the 300 TPBAR shipment
  - 20% rather than 8% (25/300) due to presence of 2 pre-failed rods in both 25 and 300 TPBAR transport configurations

# Shielding Considerations for PWR/BWR Rod Transport Canister TPBAR Shipment

- Reduced source (8% of 300 TPBAR shipment)
- Increased shielding provided by basket insert and rod canister structure
- Canister lid structure provides axial offset from cask lid – TPBAR source remains within cask lead shield
- TPBARs in PWR/BWR Transport Rod Canister are bounded by the analysis for 300 TPBARs in Consolidation Canister

# Criticality Considerations for PWR/BWR Rod Transport Canister TPBAR Shipment

- There are no criticality considerations as TPBARs do not contain fissile material

# Evaluation Summary for TPBARs in PWR/BWR Rod Transport Canister

- Only TPBAR basket structural analysis and associated cask body analysis are not clearly bounded by 300 TPBARs in the consolidation canister
- Structural analysis presented within SAR are repeated with increased weight and demonstrated to retain significant safety margin
- Thermal, containment, shielding chapters are modified to include justifications why requested payload is bounded

# Design Modifications for Increased Tube Size in PWR/BWR Rod Transport Canister

- Larger tube replaces four 11/16 tubes in the current rod (5x5) configuration
- Allows for placement of oversize PWR guide tube or BWR water/inert rod in insert

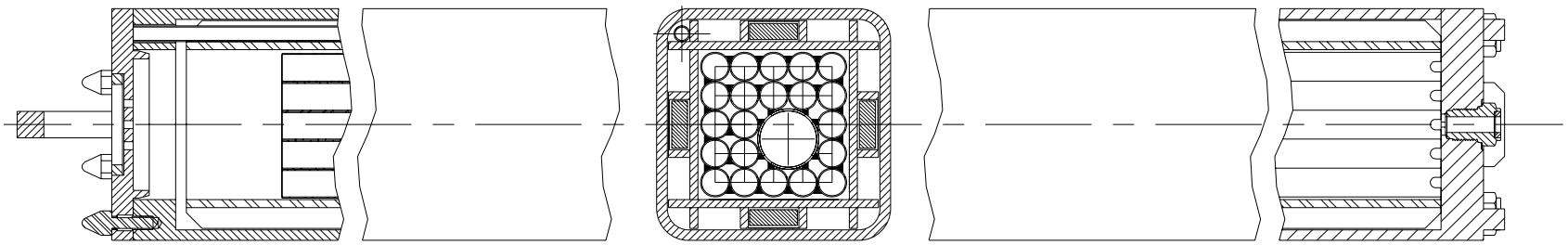

# Structural Considerations for Increased Tube Size in PWR/BWR Rod Transport Canister

- Weight of the existing rod transport container bounds the additional configuration (guide tube or water rods weight significantly less than fuel rods)
- The larger cross section has a cross section moment of inertia of 0.83 $in^4$ compared to the combined cross section moment of inertia of the four tubes of 0.20 $in^4$
- Existing evaluation for the rod transport container is considered to bound the rod transport container with the larger tube

# Thermal Considerations for Increased Tube Size in PWR/BWR Rod Transport Canister

- Heat load due to hardware component (guide tube / water rod) is negligible
- Maximum heat load is reduced by four rods or 1.76 kW as compared to 2.1 kW
- Near centering positioning of the larger tube places the location of the maximum temperature away from the center of the rod holder to further reduce the maximum clad temperature.
- Existing maximum temperature for the fuel rods of 672°F bounds the maximum rod temperature for the configuration with the enlarged tube

# Nuclear Considerations for Increased Tube Size in PWR/BWR Rod Transport Canister

- Criticality
  - Removal of fissile material mass due to removal of four fuel rods
  - Fuel rods placed at maximum reactivity pitch in baseline evaluation
  - Lower reactivity for 21 fuel rod configuration
- Shielding
  - Maintained per rod heat load / source definition
  - Removal of fissile material mass / source from model
  - No significant source in zirconium alloy guide/instrument tube or water rod located within oversize tube
  - Reduced source produces reduced/bounded dose rates

# Evaluation Summary for Increased Tube Size in PWR/BWR Rod Transport Canister

- Due to the reduction in number of fuel rods within the insert and PWR/BWR Rod Transport Canister (from a maximum 25 fuel rods to 21 fuel rods) all disciplines are bounded by the currently licensed submittal
- CoC change request limited to inclusion of BWR water/inert rods as allowed hardware in BWR rod shipment and addition of the optional large tube insert

# License Drawing Updates

- Additional Configuration
  - Updated TPBAR Transport Configuration with PWR/BWR Rod Transport Canister Configuration
  - Updated 5x5 Rod Insert with Oversize Tube Added as an Alternate

# Questions?