Revised TPBAR Content
NAC-LWT Shipment

March 17, 2009

NAC International is a Wholly Owned Subsidiary of USEC Inc., the World's Leading Supplier of Enriched Uranium Fuel for Commercial Nuclear Power Plants.

NAC INTERNATIONAL

TPBAR Amendment Application

NAC-LWT Legal Weight Truck

Spent Fuel Transport Cask

Docket #71-9225

Content Conditions

- NAC-LWT currently authorized to transport the following TPBAR contents within a TPBAR basket:
  - **300 TPBARs in a Consolidation Canister**
  - **Up to 55 TPBARs (or segments) in a Waste Container**
- NAC to request authorization to ship up to 25 TPBARs in a PWR/BWR Rod Transport Canister (in 5x5 rod insert)
- Additional request to modify 5x5 rod insert for PWR/BWR transport canister for larger tube - allows transport of larger than single lattice position PWR guide tube or BWR water rod

Transport Configuration for PWR/BWR Rod Transport Canister TPBAR Shipment

- Configuration uses TPBAR basket with slight (0.5 inch) reduction in bottom spacer
  (6.5-inch spacer versus 7.0-inch)
- TPBAR basket content:
  - PWR Insert
    - PWR/BWR Rod Transport Canister
      - Internal Spacer and Rod Insert
        - TPBARs

PWR/BWR Rod Transport Canister Assembly

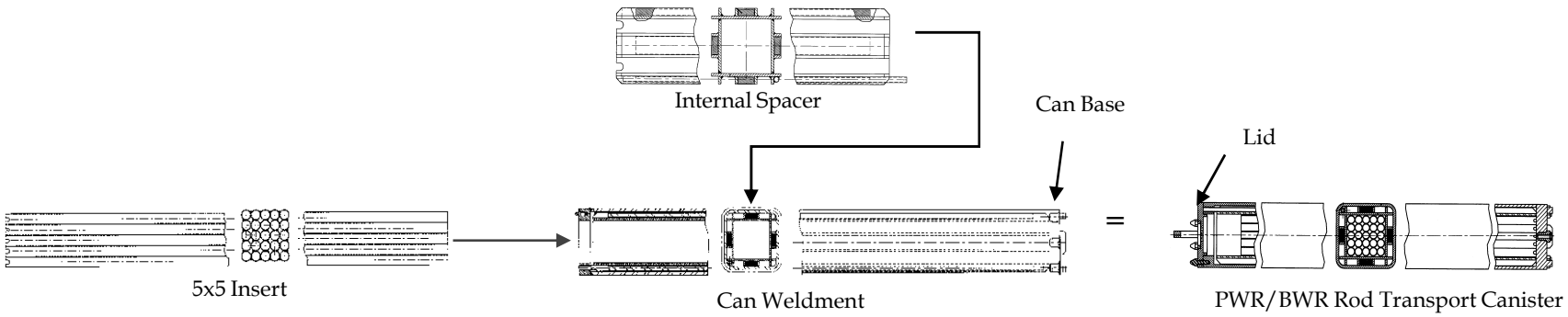

PWR/BWR Rod Transport Canister with the TPBAR Basket Assembly

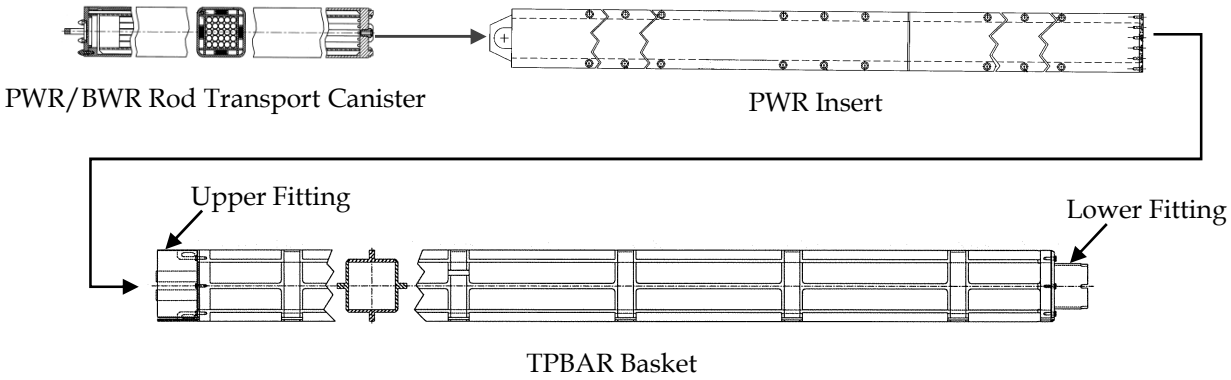

Loaded NAC-LWT Configuration – TPBAR Basket and PWR/BWR Transport Rod Canister

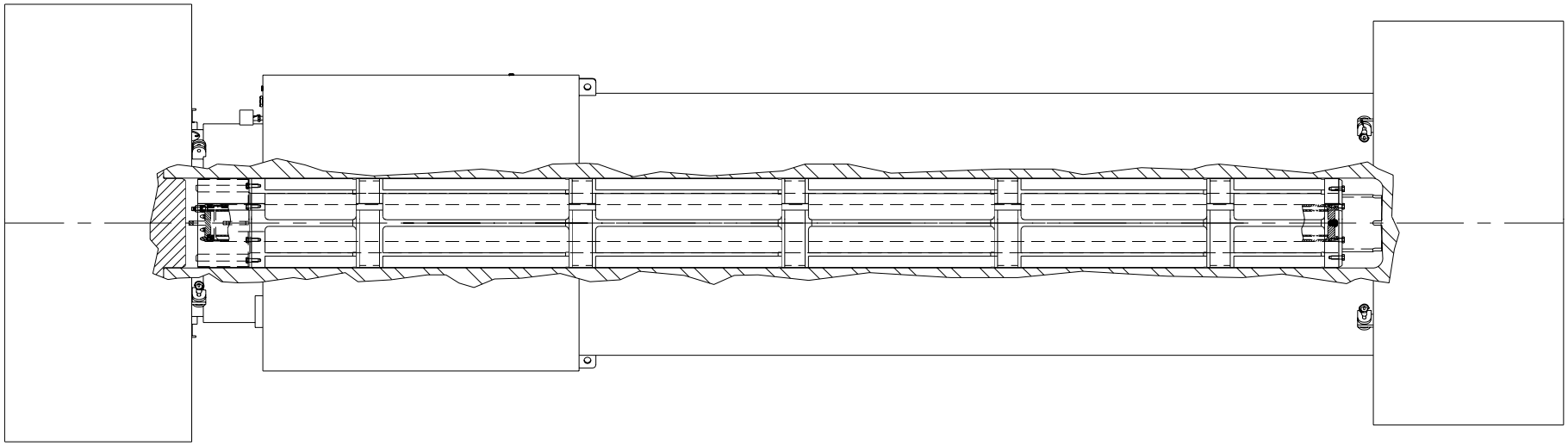

Structural Considerations for PWR/BWR Rod Transport Canister TPBAR Shipment

- PWR high burnup rods with rod container shipment licensed in 2000
- Weight of PWR rod cask body contents bounds TPBARs cask body contents
  - for 25 PWR rods in container with PWR basket: 2,494 pounds
  - for 25 TPBARs in container with TPBAR basket: 1,901 pounds
- Weight applied to TPBAR basket is increased above previously evaluated load of 1,000 pounds (loaded consolidation canister weight of 978 lb)
  - Estimated weight of insert and loaded rod canister is 1,326 pounds
  - TPBAR basket structural calculation is revised to carry a1,650 lb load and FS is large
  - Minimum FS is 2.32 (normal condition)

NAC INTERNATIONAL

Structural Considerations for PWR/BWR Rod Transport Canister TPBAR Shipment (Continued)

- TPBAR in PWR rod container shipment contents weight for cask body evaluation is 1,901 pounds as compared to the previous TPBAR cask body evaluation contents weight of 1,800 pounds
  - Minimum margin for TPBAR cask body stresses were revised (by ratios) to account for minimal **101**-pound weight increase (empty cask weight is **47,208** pounds)
  - Pressure from TPBAR configuration (600 psi) combined with the increased weight (101 pounds) is used to show that the existing main cask lid bolt torque is still bounding

NAC INTERNATIONAL

Thermal Considerations for PWR/BWR Rod Transport Canister TPBAR Shipment

- Heat load of 25 TPBARs is 58 Watts as compared to 2,500 Watts of the PWR high burnup rod configuration
- Thermal conduction differences within the rod transport container configuration is insignificant between TPBAR and PWR rods
- The TPBAR basket differs from the PWR basket which supports the rod transport container.
  - Fuel clad temperatures are revised to account for the rod container in the TPBAR basket using temperature results from the PWR high burnup model and the TPBAR basket model
    - Normal condition and fire accident condition
  - Maximum temperature of TPBAR is 234°F (normal) as compared to 290°F for the original TPBAR shipment
- Temperature margins are therefore increased

NAC INTERNATIONAL

Containment Considerations for PWR/BWR Rod Transport Canister TPBAR Shipment

- Retain NAC-LWT leaktight (no credible leakage) configuration with metallic seals
- ANSI N.14.5-1997 leak testing invoked in current SAR operating procedures
- No changes to containment chapter and pressure section as previous configuration of 300 TPBARs bounds
  - No pressure increase due to 80% of system free volume is associated with the TPBAR basket cross section and pressurizing gases are reduced to 20% of the 300 TPBAR shipment
  - 20% rather than 8% (25/300) due to presence of 2 pre-failed rods in both 25 and 300 TPBAR transport configurations

Shielding Considerations for PWR/BWR Rod Transport Canister TPBAR Shipment

- Reduced source (8% of 300 TPBAR shipment)
- Increased shielding provided by basket insert and rod canister structure
- Canister lid structure provides axial offset from cask lid – TPBAR source remains within cask lead shield
- TPBARs in PWR/BWR Transport Rod Canister are bounded by the analysis for 300 TPBARs in Consolidation Canister

Criticality Considerations for PWR/BWR Rod Transport Canister TPBAR Shipment

- There are no criticality considerations as TPBARs do not contain fissile material

Evaluation Summary for TPBARs in PWR/BWR Rod Transport Canister

- Only TPBAR basket structural analysis and associated cask body analysis are not clearly bounded by 300 TPBARs in the consolidation canister
- Structural analysis presented within SAR are repeated with increased weight and demonstrated to retain significant safety margin
- Thermal, containment, shielding chapters are modified to include justifications why requested payload is bounded

Design Modifications for Increased Tube Size in PWR/BWR Rod Transport Canister

- Larger tube replaces four 11/16 tubes in the current rod (5x5) configuration
- Allows for placement of oversize PWR guide tube or BWR water/inert rod in insert

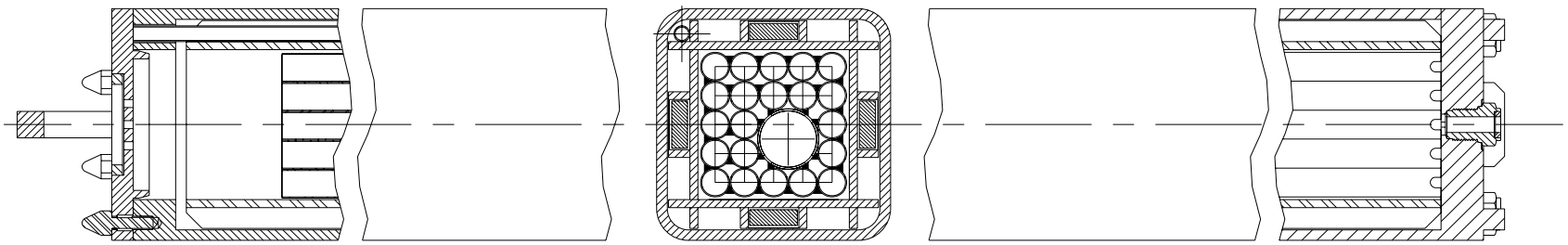

Structural Considerations for Increased Tube Size in PWR/BWR Rod Transport Canister

- Weight of the existing rod transport container bounds the additional configuration (guide tube or water rods weight significantly less than fuel rods)
- The larger cross section has a cross section moment of inertia of 0.83 in^4 compared to the combined cross section moment of inertia of the four tubes of 0.20 in^4
- Existing evaluation for the rod transport container is considered to bound the rod transport container with the larger tube

Thermal Considerations for Increased Tube Size in PWR/BWR Rod Transport Canister

- Heat load due to hardware component (guide tube / water rod) is negligible
- Maximum heat load is reduced by four rods or 1.76 kW as compared to 2.1 kW
- Near centering positioning of the larger tube places the location of the maximum temperature away from the center of the rod holder to further reduce the maximum clad temperature.
- Existing maximum temperature for the fuel rods of 672°F bounds the maximum rod temperature for the configuration with the enlarged tube

Nuclear Considerations for Increased Tube Size in PWR/BWR Rod Transport Canister

- Criticality
  - Removal of fissile material mass due to removal of four fuel rods
  - Fuel rods placed at maximum reactivity pitch in baseline evaluation
  - Lower reactivity for 21 fuel rod configuration
- Shielding
  - Maintained per rod heat load / source definition
  - Removal of fissile material mass / source from model
  - No significant source in zirconium alloy guide/instrument tube or water rod located within oversize tube
  - Reduced source produces reduced/bounded dose rates

Evaluation Summary for Increased Tube Size in PWR/BWR Rod Transport Canister

- Due to the reduction in number of fuel rods within the insert and PWR/BWR Rod Transport Canister (from a maximum 25 fuel rods to 21 fuel rods) all disciplines are bounded by the currently licensed submittal
- CoC change request limited to inclusion of BWR water/inert rods as allowed hardware in BWR rod shipment and addition of the optional large tube insert

License Drawing Updates

- Additional Configuration
  - Updated TPBAR Transport Configuration with PWR/BWR Rod Transport Canister Configuration
  - Updated 5x5 Rod Insert with Oversize Tube Added as an Alternate

Questions?