Nuclear Operating Company
South Texas Project Electric Generating Station P.O. Box 289 Wadsworth, Texas 77483

March 25, 2009
U7-C-STP-NRC-090022

U. S. Nuclear Regulatory Commission
Attention: Document Control Desk
One White Flint North
11555 Rockville Pike
Rockville, MD 20852-2738

South Texas Project
Units 3 and 4
Docket Nos. 52-012 and 52-013
Revised Responses to Requests for Additional Information

Reference:
1. Letter, M. A. McBurnett to Document Control Desk, "Response to Requests for Additional Information," dated January 28, 2009 (U7-C-STP-NRC-090001, ML090300648)
2. Letter, S. Head to Document Control Desk, "Supplemental Responses to Requests for Additional Information," dated February 23, 2009 (U7-C-STP-NRC-0900012, ML090710301)

This letter provides revised responses to the following previously submitted RAI responses:

02.04.02-3	02.04.04-1	02.04.10-1	02.04.13-10	03.04.01-5
	02.04.04-2			
	02.04.04-3			
	02.04.04-4			
	02.04.04-5			
	02.04.04-6			
	02.04.04-7			
	02.04.04-8			

The responses to these RAI questions have been revised to incorporate the results of the revised embankment breach analysis for the Main Cooling Reservoir (MCR). The revised MCR embankment breach analysis was described in the responses to RAI questions 02.04.04-9 and RAI 02.04.04-10 (Reference 1) and the associated proposed changes to COLA, Part 2, Tier 2, were subsequently provided as supplemental information (Reference 2). The list of RAIs provided above differs from the list provided in Reference 2 to reflect a more thorough evaluation of the RAIs affected by the revised MCR embankment breach analysis.

There are no commitments in this letter.

STI 32446923 D091 NRO

If you have any questions regarding these responses or commitments, please contact me at (361) 972-7136, or Bill Mookhoek at (361) 972-7274.

I declare under penalty of perjury that the foregoing is true and correct.

Executed on 3/25/2009

Scott Head
Manager, Regulatory Affairs
South Texas Project Units 3 & 4

rhb

Attachments:

1. Question 02.04.02-3, Response Revision 1
2. Question 02.04.04-1, Response Revision 1
3. Question 02.04.04-2, Response Revision 1
4. Question 02.04.04-3, Response Revision 1
5. Question 02.04.04-4, Response Revision 1
6. Question 02.04.04-5, Response Revision 1
7. Question 02.04.04-6, Response Revision 1
8. Question 02.04.04-7, Response Revision 1
9. Question 02.04.04-8, Response Revision 1
10. Question 02.04.10-1, Response Revision 1
11. Question 02.04.13-10, Response Revision 1
12. Question 03.04.01-5, Response Revision 1

Enclosure: DVD: STP 3& 4 - RAI 02.04.04-8, Response Revision 1, "MCR Breach Analysis Input And Output Files"

cc: w/o attachment except*
(paper copy)

Director, Office of New Reactors
U. S. Nuclear Regulatory Commission
One White Flint North
11555 Rockville Pike
Rockville, MD 20852-2738

Regional Administrator, Region IV
U. S. Nuclear Regulatory Commission
611 Ryan Plaza Drive, Suite 400
Arlington, Texas 76011-8064

Kathy C. Perkins, RN, MBA
Assistant Commissioner
Division for Regulatory Services
P. O. Box 149347
Austin, Texas 78714-9347

Alice Hamilton Rogers, P.E.
Inspections Unit Manager
Texas Department of Health Services
P. O. Box 149347
Austin, Texas 78714-9347

C. M. Canady
City of Austin
Electric Utility Department
721 Barton Springs Road
Austin, TX 78704

*Steven P. Frantz, Esquire
A. H. Gutterman, Esquire
Morgan, Lewis & Bockius LLP
1111 Pennsylvania Ave. NW
Washington D.C. 20004

*George F. Wunder
*Tekia Govan
Two White Flint North
11545 Rockville Pike
Rockville, MD 20852

(electronic copy)

*George Wunder
*Tekia Govan
Loren R. Plisco
U. S. Nuclear Regulatory Commission

Steve Winn
Eddy Daniels
Joseph Kiwak
Nuclear Innovation North America

Jon C. Wood, Esquire
Cox Smith Matthews

J. J. Nesrsta
R. K. Temple
Kevin Pollo
L. D. Blaylock
CPS Energy

RAI 02.04.02-3:

QUESTION:

Provide a discussion of (A) flood magnitude and timing; (B) the effect on water levels in the power block area; and, (C) the effect of the 34 ft MSL constant water level boundary condition in HEC-RAS simulation, if FM 521 were not to act like a barrier and flood runoff from North 1 and 2 subbasins were not lagged significantly. Provide justification for using a 6-hr PMP, rather than using a shorter duration and more intense PMP value, to obtain a peak PMF water level in the power block area. Specify in the FSAR, at which spot within the power block area, the peak flooding level was simulated.

REVISED RESPONSE:

This RAI response is being revised to reflect the revised MCR embankment breach analysis described in the responses to RAI questions 02.04.04-9 and RAI 02.04.04-10, which were submitted on January 28, 2009. The MCR embankment breach analysis was re-evaluated to establish critical embankment breach parameters based on available literature on dam failure case studies. The average breach width used in the present analysis was 417 feet, as opposed to the postulated breach width of 4,757 feet in the analysis documented in COLA Revision 2. On February 23, 2009, STP provided supplements to the responses to RAI questions 02.04.04-9 and RAI 02.04.04-10 that show proposed changes to the COLA that incorporate the results of the revised MCR embankment breach analysis.

In order to provide clarity, the response to this question is provided in three parts:

RAI Part 1: Provide a discussion of (A) flood magnitude and timing; (B) the effect on water levels in the power block area; and, (C) the effect of the 34 ft MSL constant water level boundary condition in HEC-RAS simulation, if FM 521 were not to act like a barrier and flood runoff from North 1 and 2 subbasins were not lagged significantly.

RAI Part 1 Response:

In the analysis of local probable maximum precipitation (LPMP) flooding, presented in Revision 0 of FSAR 2.4S.2 (also referred to as the COLA base case in this response), highway FM 521 was modeled as a drainage divide. It separated subbasins North1 and North2, as defined in Revision 0 of FSAR Figure 2.4S.2-5, in the north and west sides of the STP 3 and 4 site from the rest of the contributing drainage area of the Main Drainage Channel (MDC) (Revision 0 FSAR Figure 2.4S.2-4). Flood flow from North1 and North2 was postulated to pass through the culvert crossing of FM521 at Little Robins Slough (LRS), and also spill over the road crest towards LRS when the flood level was high. FM 521 was modeled as drainage divide that backs up flood flow from North1 and North2 because it has a road crest elevation of 32 ft NGVD29, which is about 4 ft higher than the surrounding natural ground elevation of approximately 28 ft NGVD29. If FM

521 were not to act like a barrier, flood flow from North1 and North2 towards LRS and MDC would be not restricted, and would potentially have a smaller lag behind the flood flow from other contributing subbasins. Two new modeling scenarios, each representing a different bounding level of effectiveness of FM 521 as a flow barrier, are formulated to evaluate the impact of FM 521 on the LPMP flooding pattern as described below.

In Scenario 1, flood flow from North1 and North2 is assumed to discharge to LRS unimpeded. This is accomplished in the HEC-HMS flood routing model (Reference 1) by assigning a junction element, instead of a reservoir element as in the COLA base case, at the FM 521 crossing at LRS. The conceptual model for Scenario 1 as represented in HEC-HMS is shown on Figure 1, while the scheme for the COLA base case presented in the FSAR is shown on Figure 2.4S.2-6 of Revision 0 of the FSAR.

In Scenario 2, FM 521 is assumed to be completely ineffective as a flow barrier and no longer constitutes a drainage divide between subbasins North1/North2 and North3. Flood flow from the northern subbasins North1, North2 and North3, now combined to form a bigger subbasin North1A, would discharge to MDC at its junction with LRS. The conceptual model of Scenario 2 as represented in HEC-HMS is shown on Figure 2.

The HEC-HMS modeling results of the two scenarios show that Scenario 1 produces a higher flood peak at the junction of LRS and MDC (model junction "Outflow") than Scenario 2 (at model junction "Outflow"). This is primarily a result of the longer time of concentration estimated for the larger subbasin North1A, which has a longer flow path. Consequently, the predicted flood hydrograph for Scenario 1 is used to estimate the maximum water level in the power block area by using the HEC-RAS model previously developed for the COLA base case.

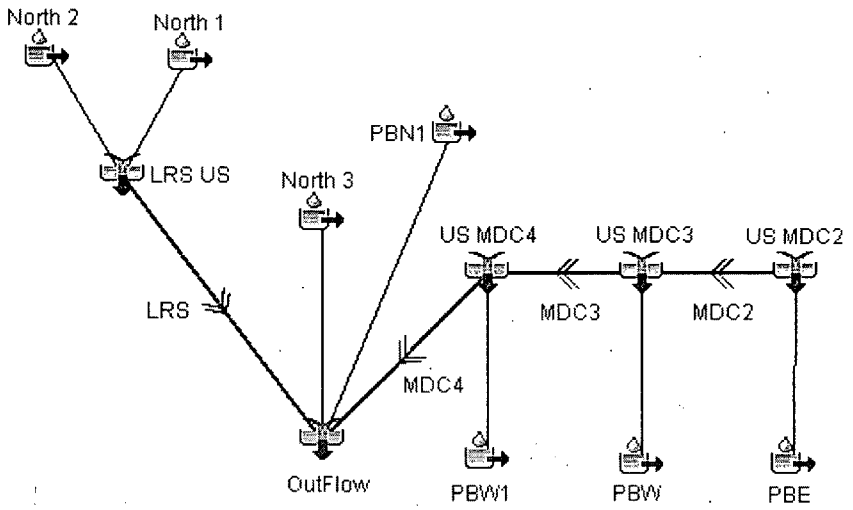

Figure 1 – HEC-HMS Hydrologic Diagram for Scenario 1

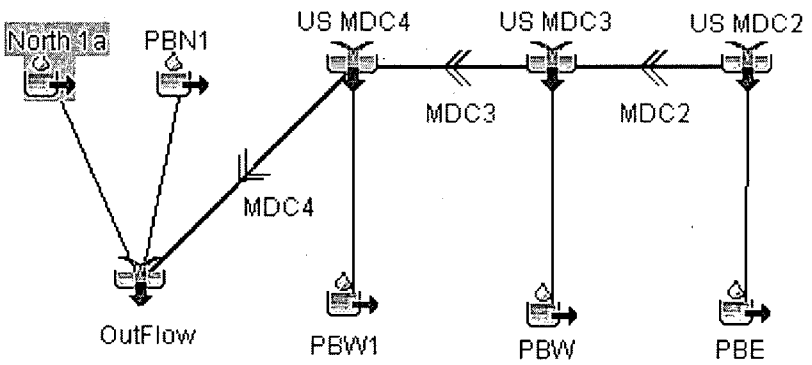

Figure 2 – HEC-HMS Hydrologic Diagram for Scenario 2

(A) Flood Magnitude and Timing

The HEC-HMS results for Scenario 1 show that the peak discharge from the northern subbasins (North1 and North2) that contributes to LRS (9,714.9 cfs) is higher and arrives earlier (5:25 hrs into the storm) than the peak discharge (7,690.3 cfs) and arrival time (6:25 hrs into the storm) from the COLA base case. For Scenario 1, the predicted peak discharge at model junction Outflow is 11,459.6 cfs, which is about 16% higher than the peak discharge of 9852.0 cfs from the COLA base case simulation. The arrival times of the peaks are nearly the same, 3:35 hrs and 3:40 hrs into the storm, respectively. The peak discharges and their arrival times at the subbasin outlets for the eastern subbasins (PBE, PBW, PBN1 and PBW1) remain unchanged. The

predicted peak discharges and the corresponding flood peak arrival time for each subbasin are shown in Table 1. A time step of 5 min is used in the HEC-HMS model simulation.

(B) Effect on Water Levels in the Power Block Area

For water level estimation, the steady-flow routing option in HEC-RAS is used. As in the COLA base case simulation, the predicted flood hydrographs from the HEC-HMS model at each of the subbasin outlets and junction elements are used to establish the inflow at the corresponding model channel cross sections in the HEC-RAS model. Because the HEC-HMS flood hydrograph at Junction Outflow peaks at 3:40 hrs into the storm, the predicted flood discharges at Junction LRS US and at the outlet of subbasin North3 at 3:40 hrs are used to estimate the HEC-RAS inflow. However, for subbasins PBW, PBE, PBN1 and PBW1, the peaks of the predicted flood hydrographs are conservatively used, regardless of their peak arrival times. This conservative approach results in approximately 16% higher flow discharge (13,293.1 cfs) assigned to the downstream-most section (West Access Road) in the HEC-RAS model than the peak flow of 11459.6 cfs at junction Outflow predicted in the HEC-HMS model. A similar approach was used in the COLA base case simulation, where the peak flow at the downstream-most cross section was 11,080.4 cfs. The Scenario 1 peak discharge at the downstream-most cross section (13,293.1 cfs) is about 20% higher than the corresponding peak discharge used in the COLA base case. The incremental and cumulative discharges at each HEC-RAS river cross section for Scenario 1 are shown in Table 2.

The maximum water level near the power block area is predicted to be 36.8 ft MSL for Scenario 1. This elevation is 0.2 ft higher than the flood elevation from the COLA base case. Although the peak discharge at the outflow location is increased by about 20% for Scenario 1 compared to that in COLA base case, the increase in the maximum flood elevation is only about 0.6%.

This maximum flood water level of 36.8 ft MSL occurs in the East Channel at the most-upstream river station (Cross Section or CS 1690), as well as at two cross sections on the East Channel near the Unit 3 reactor building, CS 1000 and CS 1200. The locations of the cross sections are shown on Figure 2.4S.2-7 of the Revision 0 of the FSAR.

It should be noted that the predicted increase in the peak water level in the power block for Scenario 1 is the result of using conservative assumptions in establishing the conceptual model that do not reflect the realistic flood routing characteristics in the contributing drainage area. For instance, Scenario 1, which represents a partial breach of FM 521 near the LRS crossing, does not account for the attenuation of the flood peaks from the northern subbasins due to the backwater effects at the narrow FM 521 breach. Similarly, Scenario 2, which represents complete failure of FM 521, does not account for the reduction of flood flow as a portion of the runoff from the northern subbasins would be diverted away from the MDC and LRS without FM 521.

(C) Effect of the 34 ft MSL Constant Water Level Boundary Condition in HEC-RAS Simulation

The sensitivity of the constant water level downstream boundary condition on the upstream water levels is discussed in Revision 0 of FSAR Subsection 2.4S.2.3.4. It indicates that the critical flow condition exists at the West Access Road crossing when the water level downstream is at 34 ft MSL or below. The general topography of the areas shows that there would only be minor changes to the drainage divide and flood flow patterns downstream of the West Access Road crossing in the hypothetical event that FM 521 would not act as a barrier. Therefore, the 34 ft MSL downstream boundary condition used in the COLA base case and Scenario 1 would still be valid.

No COLA revision is required as a result of this Part 1 response.

Table 1 – STP 3 & 4 Site PMP Peak Discharges for Scenario 1

Hydrologic Element	Drainage Area (mi^2)	Peak Discharge (cfs)	Time of Peak	Runoff Volume (in)
LRS	1.764	9707.1	26Jul2007, 05:35	31.68
LRS US	1.764	9714.9	26Jul2007, 05:25	31.68
MDC2	0.089	1428.7	26Jul2007, 03:30	31.68
MDC3	0.224	3588.4	26Jul2007, 03:35	31.68
MDC4	0.273	3937.5	26Jul2007, 03:35	31.68
North 1	1.466	7971.5	26Jul2007, 05:30	31.68
North 2	0.298	1773.1	26Jul2007, 05:15	31.68
North 3	0.177	1457.3	26Jul2007, 04:25	31.68
OutFlow	2.533	**11459.6**	26Jul2007, 03:40	31.68
PBE	0.089	1443.3	26Jul2007, 03:25	31.68
PBN1	0.319	4243.8	26Jul2007, 03:35	31.68
PBW	0.135	2304.4	26Jul2007, 03:25	31.68
PBW1	0.049	1367.7	26Jul2007, 03:10	31.68
US MDC2	0.089	1443.3	26Jul2007, 03:25	31.68
US MDC3	0.224	3635.2	26Jul2007, 03:25	31.68
US MDC4	0.273	3976.3	26Jul2007, 03:30	31.68

Table 2 – HEC-RAS Inflow Discharges for Different Cross Sections (River Stations)

Channel	Reach	River Station	Downstream Reach Length (ft)	Contributing Subbasins	Incremental Inflow (cfs)	Model Discharge in HEC-RAS (cfs)	Comments
EastChannel	EC-R1	1690	90	PBE	632.5	632.5	Upstream CS
EastChannel	EC-R1	1600	200		90.1	722.6	
EastChannel	EC-R1	1400	200		90.1	812.6	
EastChannel	EC-R1	1200	200		90.1	902.7	
EastChannel	EC-R1	1000	200		90.1	992.8	
EastChannel	EC-R1	0800	200		90.1	1082.9	
EastChannel	EC-R1	0600	200		90.1	1173.0	
EastChannel	EC-R1	0400	200		90.1	1263.1	
EastChannel	EC-R1	0200	100		90.1	1353.2	
EastChannel	EC-R1	0150	In-line Structure				
EastChannel	EC-R1	0050	0		90.1	1443.3	
LRS	LRS-R1	2200	200	North1, North2, North3[a]	3099.8	3099.8	From LRS US[a]
LRS	LRS-R1	2000	200		83.4	3183.2	
LRS	LRS-R1	1800	200		83.4	3266.6	
LRS	LRS-R1	1600	200		83.4	3350.0	
LRS	LRS-R1	1400	200		83.4	3433.4	
LRS	LRS-R1	1200	200		83.4	3516.9	
LRS	LRS-R1	1000	200		83.4	3600.3	
LRS	LRS-R1	0800	200		83.4	3683.7	
LRS	LRS-R1	0600	200		83.4	3767.1	
LRS	LRS-R1	0400	200		83.4	3850.5	
LRS	LRS-R1	0200	0		83.4	3933.9	

Table 2 – HEC-RAS Inflow Discharges for Different Cross Sections (River Stations) (continued)

Channel	Reach	River Station	Downstream Reach Length (ft)	Contributing Subbasins	Incremental Inflow (cfs)	Model Discharge in HEC-RAS (cfs)	Comments
MDC	MDC-R1	5380	100	PBE, PBW, PBN1, PBW1	1330.3	1330.3	Upstream CS
MDC	MDC-R2	5200	200		144.7	2918.3	EC flow added
MDC	MDC-R2	5000	200		144.7	3063.0	
MDC	MDC-R2	4800	200		144.7	3207.7	
MDC	MDC-R2	4600	200		144.7	3352.3	
MDC	MDC-R2	4400	200		144.7	3497.0	
MDC	MDC-R2	4200	200		144.7	3641.7	
MDC	MDC-R2	4000	200		144.7	3786.4	
MDC	MDC-R2	3800	200		144.7	3931.0	
MDC	MDC-R2	3600	200		144.7	4075.7	
MDC	MDC-R2	3400	0		144.7	4220.4	
MDC	MDC-R3	3200	200		144.7	6669.5	WC flow added
MDC	MDC-R3	3000	200		144.7	6814.1	
MDC	MDC-R3	2800	200		144.7	6958.8	
MDC	MDC-R3	2600	200		144.7	7103.5	
MDC	MDC-R3	2400	200		144.7	7248.2	
MDC	MDC-R3	2200	200		144.7	7392.8	
MDC	MDC-R3	2000	200		54.4	7447.3	
MDC	MDC-R3	1800	200		54.4	7501.7	
MDC	MDC-R3	1600	200		54.4	7556.1	
MDC	MDC-R3	1400	200		54.4	7610.5	

Table 2 – HEC-RAS Inflow Discharges for Different Cross Sections (River Stations) (continued)

Channel	Reach	River Station	Downstream Reach Length (ft)	Contributing Subbasins	Incremental Inflow (cfs)	Model Discharge in HEC-RAS (cfs)	Comments
MDC	MDC-R3	1200	200		54.4	9032.7	PBW1 flow added
MDC	MDC-R3	1000	200		54.4	9087.1	
MDC	MDC-R3	0800	200		54.4	9141.5	
MDC	MDC-R3	0600	0		54.4	9195.9	
MDC	MDC-R4	0400	200		54.4	13184.3	LRS flow added
MDC	MDC-R4	0200	100		54.4	13238.7	
MDC	MDC-R4	0050	In-line Structure				
MDC	MDC-R4	0000	0		54.4	13293.1	
WestChannel	WC-R1	1690	90	PBW	472.8	472.8	Upstream CS
WestChannel	WC-R1	1600	200		203.5	676.3	
WestChannel	WC-R1	1400	200		203.5	879.8	
WestChannel	WC-R1	1200	200		203.5	1083.4	
WestChannel	WC-R1	1000	200		203.5	1286.9	
WestChannel	WC-R1	0800	200		203.5	1490.4	
WestChannel	WC-R1	0600	200		203.5	1693.9	
WestChannel	WC-R1	0400	200		203.5	1897.4	
WestChannel	WC-R1	0200	100		203.5	2100.9	
WestChannel	WC-R1	0150	In-line Structure				
WestChannel	WC-R1	0050	0		203.5	2304.4	

[a] Inflow corresponding to 03:40 hrs into the storm

RAI Part 2: Provide justification for using a 6-hr PMP, rather than using a shorter duration and more intense PMP value, to obtain a peak PMF water level in the power block area.

RAI Part 2 Response:

The 6-hr PMP storm used as input to the HEC-HMS flood model is represented by PMP rainfall depths of 5 min, 15 min, 1 hr, 2 hrs, 3 hrs and 6 hrs durations as shown in Table 2.4S.2-4 of Revision 0 of FSAR. The effect of the more intense PMP values corresponding to shorter duration events, down to a 5-minute duration, on the water level in the power block area have been captured in the HEC-HMS and HEC-RAS analyses. Figure 3, which shows the distribution of precipitation intensities and resulting runoff hydrograph for the subbasin PBN1, is provided as an example.

No COLA revision is required as a result of this Part 2 response.

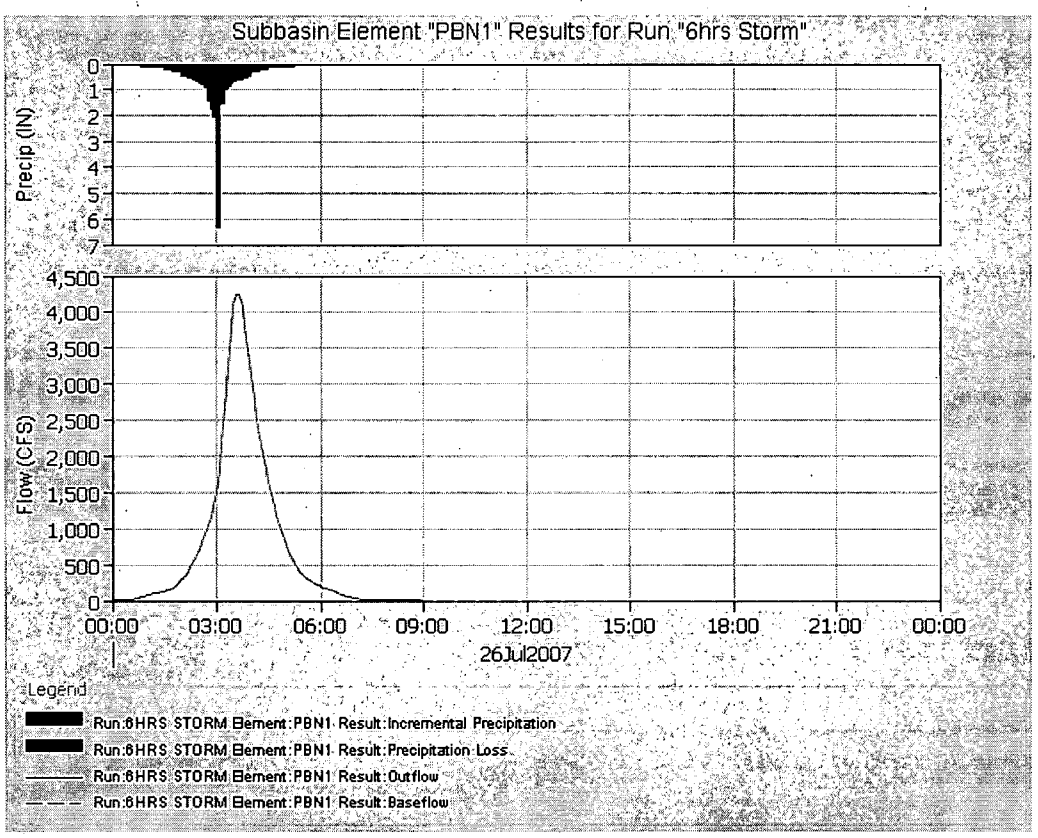

Figure 3 – Precipitation Distribution and Resulting Runoff for Subbasin PBN1

RAI Part 3: Specify in the FSAR, at which spot within the power block area, the peak flooding level was simulated.

RAI Part 3 Response:

The peak water level due to the local PMP storm event is computed on the East Channel within the protected area boundary. The maximum water level of 36.6 ft MSL occurs between river stations CS 1690 and CS 0050 with essentially a flat water surface elevation because of the back water effect from the MDC. The maximum water surface elevation would impact the safety-related reactor building and control building. In addition, the peak water levels along the entire West Channel are predicted to be at 36.4 ft MSL. Conservatively, it is assumed that the power block area with its safety related facilities are subject to the same peak flood level of 36.6 ft MSL during a local PMP event as stated in Revision 0 of FSAR Subsection 2.4S.2.3.5.

First paragraph of FSAR Section 2.4S.2.3.5 will be revised in the COLA as follows in response to Part 3 of this RAI:

> The HEC-RAS computer model simulation was used to estimate the maximum water surface elevation within the STP 3 & 4 power block area. Model simulation results showed that the maximum water surface elevation within the power block area was elevation 36.6 ft MSL. This elevation is conservatively assumed to affect the entire power block area of STP 3 & 4. This flooding elevation is higher than the power block grade elevation and the ground floor slab elevation of the safety-related SSCs. However, the local PMP water surface elevation is less than the flood elevation estimated from the postulated breach of the MCR embankment, which was estimated to be at elevation ~~47.6~~38.8 ft MSL, as discussed in Subsection 2.4S.4. Flood protection measures for the safety-related SSCs against flooding due to the MCR embankment breach are sufficient to provide protection against flood elevation due to the local PMP storm event.

References:

1. U.S. Army Corps of Engineers, Hydrologic Engineering Center, HEC-HMS, Hydrologic Modeling System, Technical Reference Manual, March 2000

RAI 02.04.04-1:

QUESTION:

Describe all metrics in addition to the level of inundation, such as duration of inundation and flow velocity effects, considered in the design of safety-related SSCs.

REVISED RESPONSE:

This RAI response is being revised to reflect the revised MCR embankment breach analysis described in the responses to RAI questions 02.04.04-9 and RAI 02.04.04-10, which were submitted on January 28, 2009. The MCR embankment breach analysis was re-evaluated to establish critical embankment breach parameters based on available literature on dam failure case studies. The average breach width used in the present analysis was 417 feet, as opposed to the postulated breach width of 4,757 feet in the analysis documented in COLA Revision 2. On February 23, 2009, STP provided supplements to the responses to RAI questions 02.04.04-9 and RAI 02.04.04-10 that show proposed changes to the COLA that incorporate the results of the revised MCR embankment breach analysis. Additionally, this RAI response is revised to reflect the results of the revised wave run-up analysis on the flood level for the Colorado River cascading dam failures.

This RAI response reflects the new Ultimate Heat Sink (UHS) location as described in COLA Revision 2.

The flood related metrics that may influence the design of the safety-related SSCs are: (a) duration of inundation; (b) inundation lead time; and (c) peak and time history of flow velocity and flow velocity effects. These metrics are discussed below for the two dam break flooding events that, hypothetically, could affect the STP Units 3 & 4 site: (1) breaching of the Main Cooling Reservoir (MCR) embankment, and (2) cascading failures of upstream dams on the Colorado River.

(a) Duration of Inundation

(a.1) Duration of Inundation due to the MCR Embankment Breach

According to FLDWAV modeling, the water level in the MCR would drop below the approximate grade elevation of the STP 3 & 4 power block (34.0 feet) within 30 hours after the start of the embankment breach. Refer to Table 2.4.4-6 in the COLA markup for the MCR embankment breach hydrograph and the associated water surface elevations within the MCR.

~~As stated in FSAR Subsection 2.4S.4, the Acceptance Criteria Limits for SRP Section 2.4.4 from the reference Table 2.1-1 of the COLA specifies that the flood level from the failure of existing and potential upstream or downstream water control structures will not exceed 30.5 cm (1.0 ft) below grade. On this basis, the reference elevation used to estimate the duration of inundation is~~

~~set to 34.0 ft (10.4 m) MSL, which is 1.0 ft (30.5 cm) below the design entrance level slab elevation of 35.0 ft (10.7 m) MSL for all safety-related structures at STP 3 & 4. Specifically, the duration of inundation is defined as the time period between the arrival of the MCR breaching flood wave at the power block area of STP 3 & 4 and when the flood level recedes below elevation 34.0 ft (10.4 m) MSL.~~

~~The duration of inundation, estimated using the Delft3D model, is approximately seven hours. This is illustrated in Figure 1, which shows a time history of the simulated water level at the southern face of the STP 3 & 4 UHS where the maximum water level within the power block area would occur according to the model predictions.~~

~~The main features of the Delft3D model that was developed in support of the flood duration estimation are discussed below:~~

~~(1) The model domain was expanded to cover a larger physical area than the Delft3D model discussed in Subsection 2.4S.4 of COLA Revision 2. The boundaries were extended 3000 m (9842.5 ft), towards the east and the west, to better approximate the duration of inundation.~~

~~(2) The breach width used in the simulation was 1450 m (4757 ft), which is the same breach width that generates the maximum predicted level of inundation at the power block area as described in COLA Revision 2.~~

~~(3) The no-flow boundary condition is specified in the model, leading to a conservative over-prediction of the duration of inundation.~~

~~(4) The bathymetry of the model was developed based on the U.S. Geological Survey's National Elevation Dataset. Figure 2 shows the bathymetry used for the expanded model domain.~~

~~(5) A dry bed initial condition was specified for the area outside the MCR. This is justified by the result of a sensitivity analysis showing that the initial water level outside the MCR has no appreciable impact on the maximum water levels in the power block during the MCR breach.~~

~~(6) The model simulation period was 12 hours, with a computational time step of 1.2 seconds.~~

As discussed in Subsection 2.4S.2.2~~4.3.2~~, all the safety related facilities of STP 3 & 4 are designed to be water tight at or below elevation of ~~48.5~~ 40.0 ft (~~14.8~~12.2 m) MSL.

(a.2) Duration of Inundation due to Failures of Upstream Dams

As discussed in Subsection 2.4S.4.3.1, the maximum still water level at STP 3 & 4 due to the failures of upstream dams and coincidental wind set-up is estimated to be 32.5 ft (9.9 m) MSL, and the breaking wave height is estimated to be 3.5 ft (1.1 m). Under this condition, the wave run-up at the power block is about ~~1.2~~1.9 ft (~~0.4~~ 0.6 m), which is estimated using the methodology given by the Coastal Engineering Manual (CEM), Reference 2.4S.4-13, and based on a maximum run-up slope of ~~no more than 6.5~~10% (near the eastern side) at the power block

area of the revised grading plan~~layout shown in COLA Revision 2~~. Therefore, the maximum flooding water level due to the failures of upstream dams, including wind setup and wave run-up, is ~~33.7~~34.4 ft (~~10.3~~10.5 m) MSL. This is below the plant building floor~~DCD flood level Acceptance Criteria Limit of~~ elevation ~~34.0~~35.0 ft (~~10.4~~10.7 m)~~ MSL for floods from failures of upstream and downstream water control structures~~. As a result, no duration of inundation due to failures of upstream dams was estimated because the safety related structures would not be inundated.

(b) Inundation Lead Time

Inundation occurs when flood waters rise above the entrance elevations of the STP 3 & 4 safety-related SSCs, which is at elevation 35.0 feet (1 foot above the plant grade elevation of 34.0 feet). According to the 2-D modeling performed for the MCR embankment breach analysis, the time it takes from the start of the breach for the flood water levels reach elevation 35.0 feet at various locations is estimated as follows:

- Southern Edge of Unit 3 UHS and Unit 4 UHS = 0.778 hours = 46.68 minutes
- Southern Edge of Unit 3 Plant Buildings = 0.813 hours = 48.78 minutes
- Southern Edge of Unit 4 Plant Buildings = 0.825 hours = 49.50 minutes

~~The lead time of the inundation due to the MCR breach event is estimated to be about 1.25 minutes (75 s), which is approximated by the time of arrival of the flood wave at the power block area as indicated on Figure 2.4S.4-21 of COLA Revision 2.~~

Because the floods from the failures of the upstream dams do not result in inundations of the safety related structures at STP 3 & 4, this metric is not applicable for this flood scenario.

(c) Peak and Time History of Flow Velocity and Flow Velocity Effects

Peak velocities and time variation of velocity resulting from the MCR embankment breach analysis are discussed in detail in Subsection 2.4S.4.2.2.4.1 of the COLA markup. The peak velocity is used to determine the hydrodynamic force on STP 3 & 4 SSCs, which is discussed in Subsection 2.4S.4.2.2.4.3 of the COLA markup.

Due to the maximum velocity of 4.72 ft/s in the STP 3 & 4 plant area, some erosion may occur at the corners of the buildings. However, because the area around the buildings is either gravel or paved surface, this erosion would be limited and would not impact the safety-related buildings.

~~The simulated flow velocity distribution near the STP 3 & 4 power block area at 12 minutes after the MCR breach is illustrated on Figure 3. This condition corresponds to the timing when the safety related structures experience the peak flood levels as a result of the MCR breach. As shown on Figure 3, the flow velocity in the vicinity of the safety related structures of both units~~

~~are on the order of 3 m/s (10 ft/s) or less. Further away from the safety related structures towards the east and west of the power block, higher velocities on the order of 5 m/s are observed in the model. The time history of flow velocity just upstream of the STP 3 & 4 UHS normal to the wall and within one grid cell (10 m or 32.8 ft) is depicted on Figure 4. As the figure indicates, the initial impact of the MCR breaching wave reaches 1.7 m/s (5.6 ft/s) and decreases to about 0.17 m/s (0.6 ft/s) at 10 minutes after the MCR breach.~~

Because the floods from the failures of the upstream dams do not result in inundations of the safety related structures in the STP 3 & 4 power block area, these metrics are not applicable for this flood scenario.

No COLA revision is required as a result of this response.

The following figures, which were part of the original response to RAI 02.04.04-1, are no longer part of the response and are deleted:

RAI 02.04.04-1 Figure 1: 'Time History of Water Level at the Southern Face of STP 3 & 4 UHS';

RAI 02.04.04-1 Figure 2: 'Model Bathymetry in Reference to MSL, in meters (negative values are above the MSL)';

RAI 02.04.04-1 Figure 3: 'Velocity Vectors at the Power Blocks after 12 Minutes of the MCR Breach'; and,

RAI 02.04.04-1 Figure 4: 'Time History of Flow Velocity in m/s (northwards) at the Southern Face of STP 3 & 4 UHS'.

RAI 02.04.04-2:

QUESTION:

Provide a discussion supporting the validity and conservativeness of the hydrostatic and hydrodynamic pressure assumptions used in the postulated MCR Breach and Delft3D-FLOW application.

REVISED RESPONSE:

This RAI response is being revised to reflect the revised MCR embankment breach analysis described in the responses to RAI questions 02.04.04-9 and RAI 02.04.04-10, which were submitted on January 28, 2009. The MCR embankment breach analysis was re-evaluated to establish critical embankment breach parameters based on available literature on dam failure case studies. The average breach width used in the present analysis was 417 feet, as opposed to the postulated breach width of 4,757 feet in the analysis documented in COLA Revision 2. On February 23, 2009, STP provided supplements to the responses to RAI questions 02.04.04-9 and RAI 02.04.04-10 that show proposed changes to the COLA that incorporate the results of the revised MCR embankment breach analysis.

This RAI response reflects the new Ultimate Heat Sink (UHS) location as described in COLA Revision 2.

The RMA2 model was used in the present analysis instead of the Delft3D-FLOW model in Rev. 2 of the FSAR. The present analysis used in the modeling effort was conducted using FLDWAV and RMA2 for breach and downstream two-dimensional hydrodynamic simulations. In RMA2, hydrostatic pressure is the basic assumption, i.e. the acceleration in the vertical direction is negligible given that it is a two-dimensional, depth-averaged model. In FLDWAV, the modeling was conducted based on two possible flood conditions: orifice or weir flow. Equations for both orifice and weir flow simulations have been well established, including their fundamental assumptions of conservation of mass and energy. Both RMA2 and FLDWAV are verified and validated. Use of the RMA2 model is reflected in Subsection 2.4S.4 of the COLA mark-ups that were submitted in conjunction with the responses to RAI questions 02.04.04-9 and 02.04.04-10. ~~Delft3D-FLOW solves the governing flow equations based on shallow-water approximations whereby a hydrostatic pressure distribution is assumed. For rapidly varying flows, such as dam-break, flows over weirs, and hydraulic jumps, etc., a hydrostatic pressure assumption is typically not valid locally. To more accurately approximate rapidly varied flows, Delft3D-FLOW employs a numerical approximation technique (referred to as "Flooding" scheme in Delft3D-FLOW) that uses conservation properties, derived from physical balance principles in open channel hydraulics, with the shallow water equations. The numerical algorithm is an extension of the classical staggered grids with implicit integration schemes. The numerical approximation method, which is applicable to a wide range of Froude numbers, is based on the following principles (References 1 and 2):~~

~~1.Mass conservation combined with non-negative water depths to improve flooding characteristics~~
~~2.Momentum balance in flow expansions to ensure accurate representation of hydraulic jumps and bores~~
~~3.Energy head conservation in strong contractions.~~

~~The accuracy of this improved shallow water approximation method has been satisfactorily tested with analytical solutions on one-dimensional problems such as sudden contraction, sudden expansion, hydraulic jumps and dam break. Results from a 2-dimensional dam break laboratory experiment were found to be represented accurately by the numerical approximations (Reference 2).~~

~~As the flood wave travels further downstream from the MCR breach location into the far field shallow water flow regime where the safety-related facilities are located, hydrostatic pressure distribution, which is widely used and verified in practical applications, is a reasonable assumption for the flow simulation.~~

No COLA Revision is required as a result of this RAI response.

~~References:~~

~~1. WL|Delft Hydraulics (2004), Computer Program - Delft3D-FLOW for flooding computations (dam break simulation capability summary of Delft3D).~~

~~2. Stelling, G.S. and Duinmeijer, S.P.A. (2003), "A staggered conservative scheme for every Froude number in a rapidly varied shallow water flows," International Journal for Numerical Methods in Fluids, No. 43-2003, 1329-1354.~~

RAI 02.04.04-3:

QUESTION:

Provide an explanation of how the structures specifically used in the STP modeling analysis of the postulated MCR breach were handled. Discuss the effects of omitting many existing and proposed structures on the flooding level estimates.

REVISED RESPONSE:

This RAI response is being revised to reflect the revised MCR embankment breach analysis described in the responses to RAI questions 02.04.04-9 and RAI 02.04.04-10, which were submitted on January 28, 2009. The MCR embankment breach analysis was re-evaluated to establish critical embankment breach parameters based on available literature on dam failure case studies. The average breach width used in the present analysis was 417 feet, as opposed to the postulated breach width of 4,757 feet in the analysis documented in COLA Revision 2. On February 23, 2009, STP provided supplements to the responses to RAI questions 02.04.04-9 and RAI 02.04.04-10 that show proposed changes to the COLA that incorporate the results of the revised MCR embankment breach analysis.

This RAI response reflects the new Ultimate Heat Sink (UHS) location as described in COLA Revision 2.

Buildings at the STP plant site were designated as "hard" or "soft" for the two-dimensional model grid development. "Hard" buildings are rigid concrete structures which are expected to remain intact during the MCR embankment breach flood, and these structures are represented in the model grid as obstructions to the flow. "Soft" buildings are considered to be removed by the flood flow and are represented in the model grid as areas with increased Manning's friction coefficients. The removal of the "soft" buildings decreases the obstructions to the flood flow and results in more conservative flood water levels and higher velocities at the STP 3 & 4 plant buildings. However, it should be noted that these buildings are not completely omitted, as they are represented through higher Manning's friction coefficients to account for flow resistance due to remaining debris. The handling of these structures during model simulations is discussed in Subsection 2.4S.4.2.2.3.2 of the COLA markup.

~~(a) In the MCR breach flooding analysis conducted for STP 3 & 4 (referred to as the COLA base case), as described in COLA Revision 2, the existing and proposed structures, with the exception of the UHSs and other buildings inside the power block, were omitted from the model based on the assumption that they could potentially be washed away. This assumption was considered to be conservative in that these structures, most of which are located between the power blocks and the MCR, would have the effect of partially diverting and blocking the breaching flood wave before it reaches the safety-related facilities in the power block of STP 3 & 4. With the retardation of the flood flow, the predicted flood level at the power block will decrease.~~

~~(b) A sensitivity analysis was conducted to evaluate the effect of the inclusion of the structures between the power blocks and the MCR on the flooding level estimates at the safety-related facilities of STP 3 & 4. The sensitivity case includes the existing and proposed structures as listed in Table 1 in the model simulation, and their placements are shown in Figures 1A, 1B and 1C in accordance with Figure 1.2-37. Structures that occupy a small footprint or which are of open types are not included. All other modeling parameters remain the same as in the COLA base case. The maximum flood level at the power block (southern faces of STP 3 & 4 UHS) was predicted to be 14.5 m (47.6 ft) MSL, which is 0.1 m (0.3 ft) lower than the maximum flood level of 14.6 m (47.9 ft) MSL predicted for the COLA base case. (Note that, for design purposes, a maximum flood level of 48.5 ft (MSL) is used for the design basis flood level as stated in Table 2.4S.4-7.)~~

~~The predicted flood levels (of the sensitivity case) at 14 minutes after the MCR breach are shown on Figure 2. Figure 3 compares the time histories of the simulated flood levels for the COLA base case and the sensitivity case. The flood levels depicted are for a location at the southern face of the STP 3 & 4 UHS where the maximum flood level for safety-related facilities is predicted to occur.~~

~~In summary, the omission of existing and proposed structures, as represented in the COLA base case model, results in a conservative maximum flood level at STP 3 & 4 due to the postulated MCR breach.~~

No COLA revision is required as a result of this RAI response.

~~Table 1 Existing/Refurbish and Proposed Structures (between the Power Blocks and MCR) Added in the Sensitivity Case~~

~~Existing/Refurbish Structures (STP 1 & 2)~~		~~Proposed Structures (STP 3 & 4)~~	
~~Ref.~~	~~Description~~	~~Ref.~~	~~Description~~
~~5~~	~~MOC Building 5 (Refurbish)~~	~~6~~	~~Makeup Water Treatment Building~~
~~8~~	~~Potable Water Plant~~	~~13~~	~~North Security Gatehouse~~
~~15~~	~~East Security Gatehouse~~	~~14~~	~~South Security Gatehouse~~
~~20~~	~~East Fabrication Shop~~	~~16~~	~~West Sewage Treatment Plant~~
~~21~~	~~Hazardous Materials Building~~	~~17~~	~~Nuclear Training Facility Units 1—4~~
~~27~~	~~Receiving Warehouse (Refurbish)~~	~~18~~	~~Chemical Storage & Transfer Systems~~
~~29~~	~~Annex to Building 27 (Refurbish)~~	~~19~~	~~Combustible Storage Building~~
~~33~~	~~Building 33 (Medical)~~	~~23~~	~~Nitrogen Storage~~
~~45~~	~~Building 45~~	~~28~~	~~Cryogenic Carbon Dioxide Storage Equipment~~
~~48~~	~~West Security Gatehouse~~	~~31~~	~~Climate Controlled Warehouse~~
~~49~~	~~Guard Facility~~	~~32~~	~~Non-Climate Controlled Warehouse~~
~~50~~	~~MOC Building 50 (Refurbish)~~	~~37~~	~~Demineralized Water Storage Tanks/Prover Tanks A, B, C, D~~
~~56~~	~~Warehouse E~~	~~42~~	~~Receiving Warehouse~~
~~63~~	~~Maintenance Operations Facility~~	~~44~~	~~Low Level Radwaste Storage~~
~~69~~	~~NTF (Refurbish)~~	~~47~~	~~Well Water Storage~~
~~71~~	~~MOC Building 71 (Refurbish)~~	~~51~~	~~MOC Building 51~~
~~72~~	~~Gas Storage Rack~~	~~57~~	~~Communications Building~~
~~78~~	~~Old Steam Generator Storage~~	~~60~~	~~MET Lab~~
~~79~~	~~Future Reactor Head Storage~~	~~70~~	~~Hydrogen Storage Tank~~
~~90~~	~~Existing Paint Shop~~	~~77~~	~~Demin. Water Equipment~~
~~100~~	~~NSC (Administration Building)~~		
~~19A~~	~~Make up Demineralizer Building~~		
~~28A~~	~~Fire Water Storage Tanks and Pump House~~		
~~30A~~	~~Demineralizer Water Storage Tank~~		
~~32A~~	~~Electrical Load Center Building 12J~~		
~~36A~~	~~Refueling Equipment Building~~		
~~55A~~	~~Lighting Diesel Generator Building~~		
~~57A~~	~~Hypochlorination Facility~~		

~~Source: STP 3 & 4 COLA Revision 2, FSAR Figure 1.2-37~~

The following figures, which were part of the original response to RAI 02.04.04-3, are no longer part of the response and are deleted:

RAI 02.04.04-3 Figure 1A: 'Model Representation of the Structures in the Sensitivity Analysis (Source: STP 3 & 4 COLA Revision 2, FSAR Figure 1.2-37)';

RAI 02.04.04-3 Figure 1B: 'Structures between the MCR and STP 3 & 4 (west of STP 1 & 2) Modeled in the Sensitivity Analysis';

RAI 02.04.04-3 Figure 1C: 'Major Structures Near STP 1 & 2 Modeled in the Sensitivity Analysis';

RAI 02.04.04-3 Figure 2: 'Predicted Water Level Contours at 14 minutes after the MCR Breach for the Sensitivity Case, in meters, MSL'; and.

RAI 02.04.04-3 Figure 3: 'Time History of Predicted Flood Levels at the Southern Face of STP 3 & 4 UHS for the COLA Base Case and Sensitivity Case' is deleted in its entirety.

RAI 02.04.04-4:

QUESTION:

Explain the validity of the mesh resolution used in the Delft3D-FLOW application, and justify why more complex mesh options were not considered. During the safety audit this issue was explained as a typographical error. Verify that the change was made to the FSAR.

REVISED RESPONSE:

This RAI response is being revised to reflect the revised MCR embankment breach analysis described in the responses to RAI questions 02.04.04-9 and RAI 02.04.04-10, which were submitted on January 28, 2009. The MCR embankment breach analysis was re-evaluated to establish critical embankment breach parameters based on available literature on dam failure case studies. The average breach width used in the present analysis was 417 feet, as opposed to the postulated breach width of 4,757 feet in the analysis documented in COLA Revision 2. On February 23, 2009, STP provided supplements to the responses to RAI questions 02.04.04-9 and RAI 02.04.04-10 that show proposed changes to the COLA that incorporate the results of the revised MCR embankment breach analysis.

This RAI response reflects the new Ultimate Heat Sink (UHS) location as described in COLA Revision 2.

The RMA2 computer model was used for flood flow simulation for the revised MCR embankment breach analysis instead of the Delft3D-FLOW model. The two-dimensional grids for RMA2 modeling were generated with tools in the Mesh module of SMS followed by significant manual modifications to ensure good mesh quality and well representation of the physical conditions of the study area. A detailed grid was first developed and tested with a very fine 30 feet by 30 feet mesh resolution at Units 3 & 4 power block and the surrounding areas while coarser grids up to 200 feet by 250 feet were used near the mesh boundaries. To ensure that the two-dimensional grid represents the physical conditions correctly, objects such as buildings, Unit 1 & 2 ECP, channels, roads, vehicle barrier walls, the hypothetical breach, etc. were first drawn as feature arcs in the SMS Map module and then closely built into the mesh. However, the complexity and size of the grid resulted in impractical model run times and model instability issues. To resolve these issues and find a balance among model stability, execution time, and mesh resolution, the two-dimensional grid was revised and tested. The final mesh is coarser than the initial fine mesh tested, but it maintains the physical representation of the study area. The mesh, or grid, resolution is discussed in detail in Subsection 2.4S.4.2.2.3.1 of the COLA markup. The final mesh includes the major structure dimensions and features of the site. In addition, a sensitivity run using a different boundary condition resulted in similar model results within the plant area. Therefore, the final mesh is considered adequate to support the RMA2 modeling.

~~(a) The mesh resolution for the Delft3D-FLOW model presented in COLA Revision 2, the COLA base case, varies from 10 m by 10 m (32.8 ft by 32.8 ft) for the area of interest between the Main Cooling Reservoir (MCR) and power blocks to 20 m by 20 m (65.6 ft by 65.6 ft) farther away near the model boundaries, as shown in Figure 2.4S.4-13. The mesh-size independence of the model results, primarily the simulated flood levels, has been examined using different discretizations of the model domain with finer and coarser grid sizes. Specifically, a sensitivity model run based on a finer mesh, referred to hereinafter as Case 1, is used to demonstrate the validity of the mesh resolution selected for the COLA base case. The model grid size for Case 1, shown in Figure 1, varies from 7.5 m by 7.5 m (24.6 ft by 24.6 ft) in the area of interest to 7.5 m by 14.0 m (24.6 ft by 45.9 ft) next to the north and south model boundaries. The model has a uniform grid spacing of 7.5 m (24.6 ft) across the entire model width in the east-west orientation. Figure 2 compares the simulated flood levels of the two cases at a location near the southern face of STP 3 & 4 UHS where the highest flood level was predicted to occur. As the figure shows, there is no appreciable difference in the time histories of the simulated flood levels between the two cases, and the maximum flood level of 14.6 m (47.9 ft) predicted in Case 1 is the same as the COLA base case prediction. (Note that a maximum flooding level of 48.5 ft (MSL) is used conservatively as the design basis flood level as stated in Table 2.4S.4-7 of COLA Revision 2.) In summary, the Delft3D-FLOW model mesh resolution that was developed to predict the maximum flood level at STP 3 & 4 due to the postulated MCR breach is adequate.~~

~~(b) The model discretization including the orientation of the mesh was selected considering the expected flow pattern, especially in the area of interest, from the postulated MCR breach. The breach flood flow towards the power blocks is characteristically two dimensional with the predominant flow direction normal to the northern MCR embankment as the mesh is oriented. In addition, the model boundaries were placed far away from the power blocks such that the maximum flood level at the safety-related facilities would occur before the effect of the boundaries is felt at the power blocks.~~

~~(c) The typographical error on Figure 2.4S.4-13 of COLA Revision 1, as indicated in the RAI is corrected in COLA Revision 2 (specifically, one of the labels stated "20 × 20 m grid size" is corrected as "10 m × 20 m grid size.")~~

The typographical error mentioned in the RAI question is no longer in the COLA, as COLA Tier 2 Figure 2.4S.4-13 was deleted in its entirety and replaced in the COLA mark-up provided as a supplement to the responses to RAI questions 02.04.04-9 and 02.04.04-10.

No COLA revision is required as a result of this RAI response.

The following figures, which were part of the original response to RAI 02.04.04-4, are no longer part of the response and are deleted:

RAI 02.04.04-4 Figure 1: 'Model Grid Resolution for Case 1'; and,

RAI 02.04.04-4 Figure 2: 'Predicted Time History of Flood Level at the Southern Face of STP 3 & 4 UHS for Base Case and Case 1'.

RAI 02.04.04-5:

QUESTION:

Explain (A) how the MCR bottom level was selected, (B) what water volume is stored between 20 and 27-29 ft MSL in the MCR, (C) any sensitivity analysis that was done to make the selection of a flat MCR bottom elevation, and (D) why more realistic bathymetry for the MCR was not used in the dam-failure analysis.

REVISED RESPONSE:

This RAI response is being revised to reflect the revised MCR embankment breach analysis described in the responses to RAI questions 02.04.04-9 and RAI 02.04.04-10, which were submitted on January 28, 2009. The MCR embankment breach analysis was re-evaluated to establish critical embankment breach parameters based on available literature on dam failure case studies. The average breach width used in the present analysis was 417 feet, as opposed to the postulated breach width of 4,757 feet in the analysis documented in COLA Revision 2. On February 23, 2009, STP provided supplements to the responses to RAI questions 02.04.04-9 and RAI 02.04.04-10 that show proposed changes to the COLA that incorporate the results of the revised MCR embankment breach analysis.

This RAI response reflects the new Ultimate Heat Sink (UHS) location as described in COLA Revision 2.

(A) ~~As discussed in Subsection 2.4S.4.2.2.2 of COLA Revision 2, the~~ The bottom elevations of the MCR vary approximately between El. 16.0 ft MSL at the southern end to El. 28.0 ft MSL at the northern end. Specifically, the MCR bottom generally slopes down from the higher ground of 28.0 ft MSL at the northern end towards the lowest lying area in the southern end where the nominal elevation is about 20.0 ft MSL, with a few small localized areas that go down to El. 16.0 ft MSL. The MCR bottom elevation was assumed to be 20.0 feet for the revised MCR embankment breach analysis. This value was used to determine the average depth of water in the MCR required for wind set-up calculations that were used to determine the water level in the MCR before the start of the breach. ~~For the MCR breach flooding analysis, the bottom elevation of 20.0 ft, or 6.1 m MSL, was conservatively selected to simulate a larger breach height at the northern embankment, which results in higher flood levels at STP 3 & 4. Response to part (C) has details on the sensitivity analysis conducted to support the selection of the bottom elevation in the MCR breach model.~~

(B) According to Figure 2.4.8-7 of the UFSAR, Section 2.4, Revision 0 for STP 1 & 2, water volume stored between 20 and 27 ft MSL is approximately 41,100 ac-ft (50,500 ac-ft – 9400 ac-ft) and between 20 and 29 ft MSL is approximately 54,800 ac-ft (64,200 ac-ft – 9400 ac-ft).

(C) A sensitivity analysis was conducted to evaluate the effect of the MCR bottom elevation on the wind set-up calculation results. Changes to the bottom elevation of the MCR produced negligible changes to the wind set-up results.

Variations in the bottom elevation of the MCR would not affect the results of the embankment breach simulation because the embankment breach parameter equations consider only the depth of water above the breach bottom elevation of 29.0 feet, which is above the MCR bottom elevation of 20.0 feet. Refer to Subsection 2.4S.4.2.2.2.2 for a discussion of breach bottom elevation and breach parameter selection. Additionally, the MCR is not included in the two-dimensional flow model grid, which encompasses the northern MCR embankment and the plant area downstream. Thus, the bottom elevation of the MCR has no impact on the flood level simulation results. ~~A sensitivity analysis was conducted to evaluate the effect of the MCR bottom elevation on the simulated flood level at STP 3 & 4 due to a postulated breach of the MCR. In addition to the base case presented in COLA Revision 2, two sensitivity runs based on different model representations of the reservoir bottom were made: (1) a constant MCR bottom elevation of 24.0 ft (7.3 m) MSL, and (2) a uniformly sloping bottom with El. 28.0 ft (8.5 m) MSL at the northern embankment to El. 20.0 ft (6.1 m) MSL at the southern embankment. The results showed that the bottom elevation of 20.0 ft (6.1 m) MSL specified in the COLA base case produces a more conservative estimate of the maximum water level at STP 3 & 4 than the 2 sensitivity runs. Figure 1 shows the time history of the predicted flood levels at the southern face of the STP 3 & 4 UHS of the COLA base case and the two sensitivity cases.~~

(D) A more realistic representation of MCR bathymetry, or bottom elevation, was not used in the revised MCR embankment breach analysis because the results of the analysis are not sensitive to the MCR bottom elevation, as discussed in Section (C) above. ~~A more realistic bathymetry of the MCR could have been used in the dam failure analysis. However, due to significance of the design basis flood elevation, a reasonably conservative approach as discussed in (C) was adopted to establish the maximum water level at STP 3 & 4.~~

No COLA Revision is required as a result of this RAI response.

The following figure, which was part of the original response to RAI 02.04.04-5, is no longer part of the response and are deleted:

> RAI 02.04.04-5 Figure 1: 'Predicted Flood Levels at STP 3 & 4 UHS for Three Model Representations of the MCR Bottom Elevations'.

RAI 02.04.04-6:

QUESTION:

Describe sensitivity analyses undertaken to establish the basis for selecting a uniform Manning's in the postulated MCR Breach analysis.

REVISED RESPONSE:

This RAI response is being revised to reflect the revised MCR embankment breach analysis described in the responses to RAI questions 02.04.04-9 and RAI 02.04.04-10, which were submitted on January 28, 2009. The MCR embankment breach analysis was re-evaluated to establish critical embankment breach parameters based on available literature on dam failure case studies. The average breach width used in the present analysis was 417 feet, as opposed to the postulated breach width of 4,757 feet in the analysis documented in COLA Revision 2. On February 23, 2009, STP provided supplements to the responses to RAI questions 02.04.04-9 and RAI 02.04.04-10 that show proposed changes to the COLA that incorporate the results of the revised MCR embankment breach analysis.

This RAI response reflects the new Ultimate Heat Sink (UHS) location as described in COLA Revision 2.

A uniform Manning's roughness coefficient was not used in the revised MCR embankment breach analysis. Manning's roughness coefficients were selected to conservatively represent the geographic features, ground surfacing and buildings at STP 3 & 4 plant for the revised MCR embankment breach analysis and are discussed in Subsection 2.4S.4.2.2.3.2 of the COLA markup.

~~A sensitivity analysis with four different model representations of the surface roughness was conducted to evaluate the effect of the Manning's *n* selection on the results of the MCR breach analysis. The base case that establishes the design basis flood level for STP 3 & 4 as presented in COLA Revision 2 is based on a uniform Manning's n value of 0.046 and a postulated instantaneous failure on a 4757-feet wide section of the northern embankment of the MCR. The Manning's *n* values adopted in the sensitivity runs include both values in the low end of the range that are typically used to model developed areas with smooth paved surfaces, and values in the high end of the range that are typically used to represent vegetated areas. The four sensitivity cases, Cases 1 to 4, were developed with the consideration that a land surface represented by a low Manning's *n* in some areas, (e.g., the developed areas between the MCR and the power blocks), would offer a low resistance to the breach flood wave and could therefore produce higher run-ups at the structures located along the predominant flow path. Conversely, a high Manning's *n* in other locations such as the areas north, east and west of the power blocks, could potentially produce higher water levels at the safety-related structures because of the backwater effect. Table 1 summarizes the Manning's *n* selection of the four sensitivity model cases.~~

~~A breach width of 1200 feet was simulated in all the sensitivity runs. Although it is smaller than the highly conservative breach width of 4757 feet in the COLA base case, the 1200 feet width represents a reasonably conservative estimate of the maximum breach width for embankments that are comparable in design to that of the MCR. For instances, the longest breach width estimated using the method proposed by Froehlich (1995b in Reference 3) is about 550 feet. Considering an uncertainty of about ±1/3 order of magnitude (2.15 to 0.46 times the estimated value) as suggested in Reference 4 on the estimates by Froehlich's method, the upper bound of the breach width could be about 1200 feet.~~

~~All other modeling parameters for the sensitivity cases remain the same as in the COLA base case.~~

~~Table 1. Manning's *n* Selection for the Sensitivity Models~~

~~Sensitivity Cases~~	~~Manning's *n* Selection~~
~~Case 1~~	~~A uniform Manning's *n* of 0.046 for the entire model area, same as the COLA base case~~
~~Case 2~~	~~A uniform Manning's *n* of 0.06 to represent a model area that is vegetated. The value of 0.06 is slightly higher than the maximum Manning's *n* value of 0.05 recommended in Reference 1 for cultivated areas with crops.~~
~~Case 3~~	~~A uniform Manning's *n* of 0.013 to represent a model area that is developed with paved surfaces. The value of 0.013 is the minimum Manning's *n* value recommended in Reference 1 for smooth paved (asphalt) channels.~~
~~Case 4~~	~~Spatially varying Manning's *n* values from 0.013 to 0.16 to approximate the plant development of STP 3 & 4 and existing ground cover condition delineated in Figure 1 according to the National Land Cover Database (Reference 2). The 15 land cover types identified for the model area are grouped into 5 roughness classes, each represented by a unique Manning's *n* value based on the guidelines from Reference 1. Table 2 summarizes the grouping of the 5 Manning's *n* (roughness) classes. The model representation of the Manning's *n* distribution in Case 4 is shown in Figure 2.~~

~~**Table 2. Manning's *n* Grouping for Sensitivity Model Case 4**~~

~~Land Cover Type~~	~~Roughness Class~~	~~Class Manning's *n*~~
~~Open Water~~	~~Water/MCR Bed~~	~~0.02~~
~~Developed: Open Space~~ ~~Developed: Low Intensity~~ ~~Developed: Medium Intensity~~ ~~Developed: High Intensity~~ ~~Barren Land: Rock/Sand/Clay~~	~~Developed~~	~~0.013~~
~~Deciduous Forest~~ ~~Evergreen Forest~~ ~~Mixed Forest~~ ~~Woody Wetlands~~	~~Forest/Woody~~	~~0.16~~
~~Shrub/Scrub~~	~~Shrub/Scrub~~	~~0.06~~
~~Grassland: Herbaceous~~ ~~Pasture/Hay~~ ~~Cultivated Crops~~ ~~Emergent Herbaceous Wetlands~~	~~Low Vegetation~~	~~0.05~~

~~Figure 3 compares the time histories of the predicted flood levels for the four sensitivity cases and the COLA base case at a location near the southern face of STP 3 & 4 UHS where the maximum flood level for safety-related structures was predicted to occur. Among the four sensitivity cases, Case 4 produces the highest maximum flood level of 14.1m (46.3 feet) MSL, which can be explained by the designation of a very low Manning's n value of 0.013 to the area between the MCR and the power blocks and the general plant area of STP 3 & 4 and the existing Units 1 & 2, and higher Manning's *n* values to the remainder of the model area. For the three sensitivity cases (Cases 1, 2 and 3) that simulated a single land cover, i.e., a uniform Manning's *n* for the entire model area, the maximum flood level is shown to increase with decreasing Manning's *n* values. The difference in the maximum flood levels between Case 4 and Case 2 (which uses the same Manning's *n* of 0.046 as the COLA base case) is about 0.6 m (2 feet). Figure 3 also shows that the maximum flood level of 14.6 m (47.9 feet)MSL from the COLA base case is about 0.5 m (1.6 feet) higher than the maximum flood level of 14.1 m (46.3 feet)MSL from Case 4.~~

~~In summary, the Manning's *n* sensitivity analysis demonstrates that the uniform Manning's *n* value of 0.046 in conjunction with the highly conservative breach width of 4757 feet selected for~~

~~the COLA base case produce a conservatively bounding flood level prediction for the determination of the design basis flood level for STP 3 & 4.~~

No COLA revision is required as a result of this RAI response.

~~**References:**~~

~~1.Chow, V. T., 1981, "Open-Channel Hydraulics," McGraw-Hill Kogakusha, Ltd, International Student Edition, Tokyo, Japan.~~

~~2.Multi-Resolution Land Characteristics (MRLC), 2001, National Land Cover Database (NLCD), in ESRI RASTER GRID format, downloaded on April 3, 2008 from the MRLC Consortium website (http://www.mrlc.gov/scripts/mapserv.exe?map=d%3A%5CInetpub%5Cwwwroot%5Clccp%5Cmrlc2k%5Czones%5Czones.map)~~

~~3.Wahl, Tony L., 1998, "Prediction of Embankment Dam Breach Parameters, A Literature Review and Needs Assessment," Water Resources Research Laboratory, USBR Report DSO-98-004, Denver, Colorado.~~

~~4.Wahl, Tony L., 2001, "The Uncertainty of Embankment Dam Breach Parameter Predictions Based on Dam Failure Case Studies," Prepared for USDA/FEMA Workshop on Issues, Resolutions, and Research Needs Related to Dam Failure Analysis, June 26-28, 2001, Oklahoma City, OK.~~

The following figures, which were part of the original response to RAI 02.04.04-6, are no longer part of the response and are deleted:

RAI 02.04.04-6 Figure 1: 'Existing Land Cover Conditions of the Model Area' is deleted in its entirety.

RAI 02.04.04-6 Figure 2: 'Model Representation of Manning's n *Distribution for Sensitivity Model Case 4' is deleted in its entirety.*

RAI 02.04.04-6 Figure 3: 'Time Histories of Predicted Flood Levels near the Southern Face of STP 3 & 4 UHS' is deleted in its entirety.

RAI 02.04.04-7:

QUESTION:

Provide a description of any mass or volume balance checking that was performed for the postulated MCR Breach analysis.

REVISED RESPONSE:

This RAI response is being revised to reflect the revised MCR embankment breach analysis described in the responses to RAI questions 02.04.04-9 and RAI 02.04.04-10, which were submitted on January 28, 2009. The MCR embankment breach analysis was re-evaluated to establish critical embankment breach parameters based on available literature on dam failure case studies. The average breach width used in the present analysis was 417 feet, as opposed to the postulated breach width of 4,757 feet in the analysis documented in COLA Revision 2. On February 23, 2009, STP provided supplements to the responses to RAI questions 02.04.04-9 and RAI 02.04.04-10 that show proposed changes to the COLA that incorporate the results of the revised MCR embankment breach analysis.

This RAI response reflects the new Ultimate Heat Sink (UHS) location as described in COLA Revision 2.

No mass or volume balance checking was explicitly performed for the postulated Main Cooling Reservoir (MCR) embankment breach analysis. During the computer software validation and verification process, the FLDWAV, RMA2 and SED2D models were hand verified for proper representation of water volume released from the reservoir and the volume of sediment conveyed from the embankment breach. The differences between model results and hand calculations were minimal.

~~However, Delft3D-FLOW, the computer code used to perform the MCR breach simulation, employs a numerical approximation technique (referred to as the "Flooding" scheme) that uses conservation properties, derived from physical balance principles including mass conservation, energy conservation and momentum balance, on the shallow water equations. The accuracy of Delft3D-FLOW has been satisfactorily tested with analytical solutions on one-dimensional problems. Results from a 2-dimensional dam break laboratory experiment were found to be represented accurately by the numerical approximations used in Delft3D-FLOW (Reference 1). Additional discussions on the numerical scheme used by the Delft3D-FLOW model are provided in response to RAI 02.04.04-2.~~

No COLA Revision is required as a result of this RAI response.

RAI 02.04.04-8:

QUESTION:

(A) Provide Delft3D_Flow modeling input and output files including any calibration datasets of all postulated MCR breach simulations, (B) provide HEC-RAS input and output files for the Colorado River dam break analysis, and (C) in 2.4S.4.2.1.4, discuss the effect of increasing Manning's values on the estimation of flooding levels.

REVISED RESPONSE:

This RAI response is being revised to reflect the revised MCR embankment breach analysis described in the responses to RAI questions 02.04.04-9 and RAI 02.04.04-10, which were submitted on January 28, 2009. The MCR embankment breach analysis was re-evaluated to establish critical embankment breach parameters based on available literature on dam failure case studies. The average breach width used in the present analysis was 417 feet, as opposed to the postulated breach width of 4,757 feet in the analysis documented in COLA Revision 2. On February 23, 2009, STP provided supplements to the responses to RAI questions 02.04.04-9 and RAI 02.04.04-10 that show proposed changes to the COLA that incorporate the results of the revised MCR embankment breach analysis.

This RAI response reflects the new Ultimate Heat Sink (UHS) location as described in COLA Revision 2.

(A) The input and output files for the embankment breach simulation (using FLDWAV), two-dimensional flood flow modeling (using RMA2), and sediment transport and deposition (using SED2D) are provided in the enclosed DVD. ~~The Delft3D-FLOW input and output files for the MCR breach simulations including descriptions are provided in the enclosed DVD in a subfolder named: "RAI-02-04-04-8_Delft3D-FLOW_Input-Output." No calibration task was performed in regards to Delft3D-FLOW modeling and therefore no calibration datasets are provided. The files provided reflect the new Ultimate Heat Sink location as described in COLA Revision 2. This enclosure contains security-related sensitive information and should be withheld from public disclosure in accordance with 10 CFR 2.390(a)(1). The enclosure (DVD) is marked "Security-Related Information - Withhold Under 10 CFR 2.390."~~

(B) The HEC-RAS input and output files used for upstream dam breach simulations including descriptions are provided in the enclosed DVD in a subfolder named: "RAI-02-04-04-8_HEC-RAS_Input-Output." This enclosure contains security-related sensitive information and should be withheld from public disclosure in accordance with 10 CFR 2.390(a)(1). The enclosure (DVD) is marked "Security-Related Information - Withhold Under 10 CFR 2.390."

(C) As discussed in Subsection 2.4S.4.2.1.4, the calibrated Manning's *n* values were adjusted upwards relative to the calibration values to account for the high level of turbulence and entrainments of debris, and higher roughness of floodplain flows associated with the large

magnitude of flows due to the failures of the upstream dams. The upward adjustment of the Manning's *n* values is a conservative approach in that the simulated flooding water levels at the site would be higher than simulated water levels that are based on the calibrated Manning's *n* values.

The following sentence will be added as the last sentence of the last paragraph of Subsection 2.4S.4.2.1.4 of the COLA:

> Increasing the Manning's *n* values increases the simulated water levels because of increased roughness and therefore is a conservative approach in estimating the maximum flooding water levels at the plant site.

RAI 02.04.10-1:

QUESTION:

Section C.I.2.4.10 of Regulatory Guide 1.206 specifies that "the applicant should describe the static and dynamic consequences of all types of flooding on each pertinent safety-related facility." Also, Section C.I.2.4.14 states that "if the applicant will use emergency procedures...appropriate water levels and lead times available should be provided. The applicant should develop specific details on ... (2) the amount of time available to initiate and complete emergency procedures ...." To meet the above requirements, provide, in addition to severe flooding levels, other flooding parameters such as flow velocity and duration (beginning, peak, and ending) of inundation important for design of safety-related SSCs and preparation of emergency procedures.

REVISED RESPONSE:

This RAI response is being revised to reflect the revised MCR embankment breach analysis described in the responses to RAI questions 02.04.04-9 and RAI 02.04.04-10, which were submitted on January 28, 2009. The MCR embankment breach analysis was re-evaluated to establish critical embankment breach parameters based on available literature on dam failure case studies. The average breach width used in the present analysis was 417 feet, as opposed to the postulated breach width of 4,757 feet in the analysis documented in COLA Revision 2. On February 23, 2009, STP provided supplements to the responses to RAI questions 02.04.04-9 and RAI 02.04.04-10 that show proposed changes to the COLA that incorporate the results of the revised MCR embankment breach analysis.

The elevation of the entrance level slab for all safety-related buildings at the STP 3 & 4 site is 35.0 ft MSL (or NGVD29). FSAR Section 2.4S for STP 3 & 4 reports water level estimates for various flooding events. As reported in Subsection 2.4S.3, the maximum still water elevation for the probable maximum flood (PMF) on the Colorado River is estimated to be Elevation 26.3 ft MSL. The maximum still water level as a result of the probable maximum surge (PMS) at the STP 3 & 4 site is estimated to be at Elevation 31.1 ft MSL as reported in Subsection 2.4S.5. Subsection 2.4S.6 indicates that the maximum water level as a result of the probable maximum tsunami (PMT) at the Texas Gulf shoreline near the site is at Elevation 16.3 ft MSL. All of these flooding events are less controlling than the scenario of possible failures of upstream dams on the Colorado River discussed in Subsection 2.4S.4, which gives a predicted maximum still water level of 28.6 ft MSL at the power block and a maximum water level of 32.5 ft MSL when wind setup is included. Taking into account the coincidental wave runup of ~~1.2~~1.9 ft as described in the response to RAI 02.04.04-1, the maximum water level at the power block from the upstream dam failure flood event would be approximately ~~33.7~~34.4 ft MSL. This maximum flood level is ~~more than 1.0~~0.6 ft below the grade slab elevation for safety-related facilities at the STP 3 & 4 site~~, meeting the DCD flood level Acceptance Criteria limit~~. Thus, the safety-related SSCs for the STP 3 & 4 site are not exposed to flood hazards from the flooding scenarios listed above and flooding durations and velocities have not been determined. It should also be noted that the

flooding scenarios above are either results of slow moving events or there would be a long travel path for the flood wave to reach the site thus providing time for action by plant operators.

Flood levels were also estimated as a result of the local probable maximum precipitation (PMP) on the STP 3 & 4 site. As discussed in Subsection 2.4S.2, the maximum water level as a result of the local PMP is estimated to be Elevation 36.6 ft MSL. This elevation is above the grade slab elevation of the safety-related buildings. The channel velocities in the power block area are estimated in the HEC-RAS analysis that was performed for the local PMP flooding analysis. The average cross sectional velocities in the West Channel, which is located west of the Unit 4 power block, are estimated to be between 0.1 and 0.7 feet per second. The average cross sectional velocities in the East Channel, located east of the Unit 3 power block, are estimated to be between 0.2 and 1.2 feet per second.

The duration of the local PMP flood level is estimated from the local PMP hydrographs for the east and west power block drainage areas (PBE and PBW) shown in Figures 1 and 2. As shown in these figures, the duration of the entire runoff hydrograph is approximately 7 hours. The duration of flood flows above 1,000 cubic feet per second lasts less than 1 hour, and less than 3 hours for flood flows above 200 cubic feet per second for both the east and west drainage channels. The local PMP event is also a slow moving event providing time for action by plant operators.

FSAR Subsection 2.4S.2 also indicates that the ~~design basis~~ flood elevation due to a breach of the MCR embankment is at elevation ~~48.5~~38.8 ft MSL. Detailed discussion on the estimation of the MCR embankment breach flood elevation is found in FSAR Subsection 2.4S.4. As discussed in the response to RAI 02.04.04-01, the duration of inundation for the safety related structures of STP 3 & 4 as a result of a postulated breach of the MCR embankment is estimated to be approximately ~~7~~ 30 hours with a lead time to inundation estimated to be about ~~1.25~~47 minutes. However, as indicated in Subsection 2.4S.10, all safety-related facilities are designed to be water tight at or below the design basis flood elevation of ~~48.5~~40.0 ft MSL. The response to RAI 02.04.04-01 also indicates that the flow velocities in the vicinity of the safety related structures are on the order of ~~10~~ 4.7 feet per second. ~~Just upstream of the UHS, the peak velocity normal to the wall is estimated to be about 5.6 feet per second.~~ The response to RAI 02.04.04-1 reflects the new Ultimate Heat Sink (UHS) location as described in COLA Revision 2.

The time needed for preparation of emergency operating procedures during an MCR embankment breach is discussed in the response to RAI 02.04.14-1.

No COLA revision is required as a result of this RAI response.

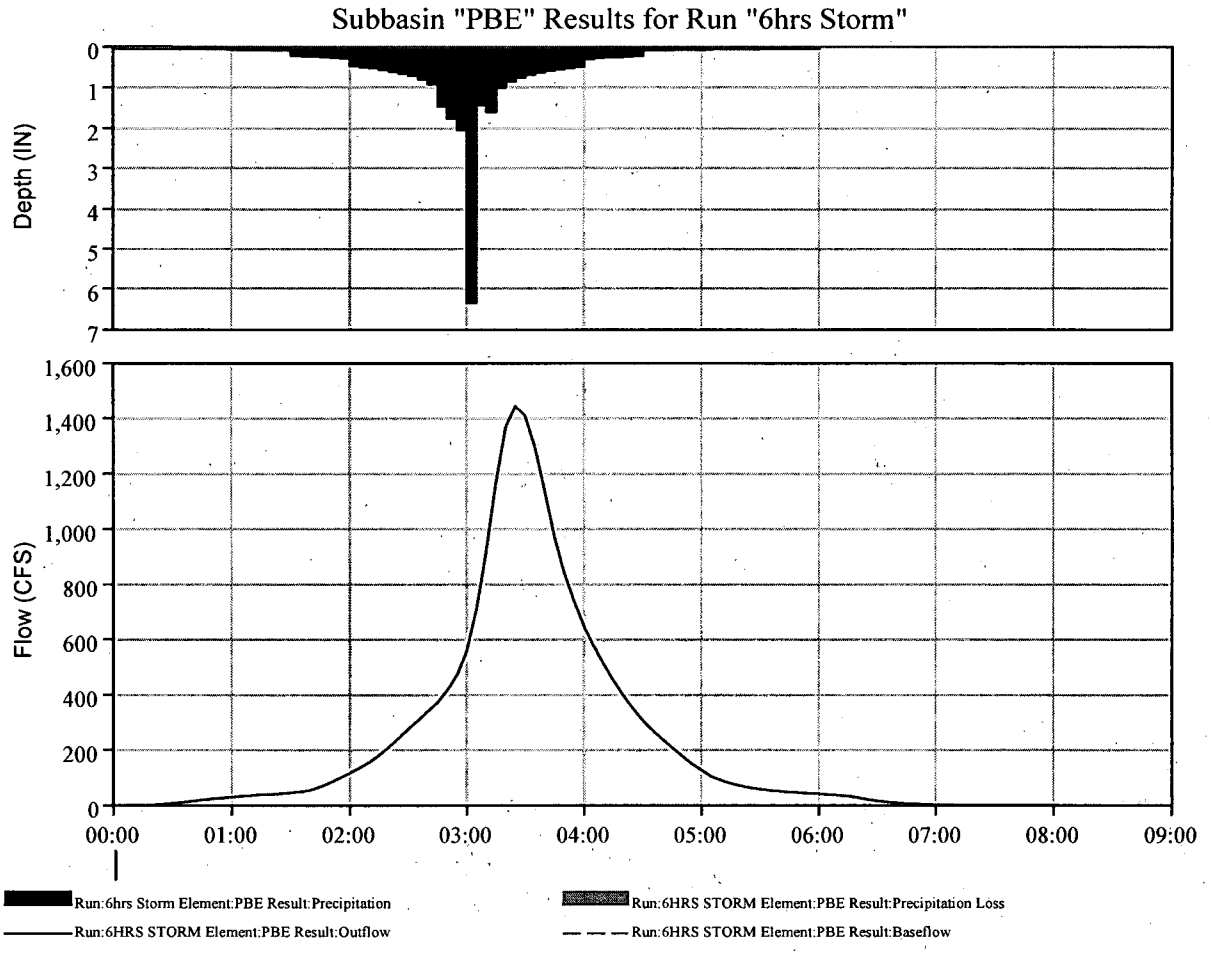

Figure 1 – PBE Local PMP Flood Hydrograph

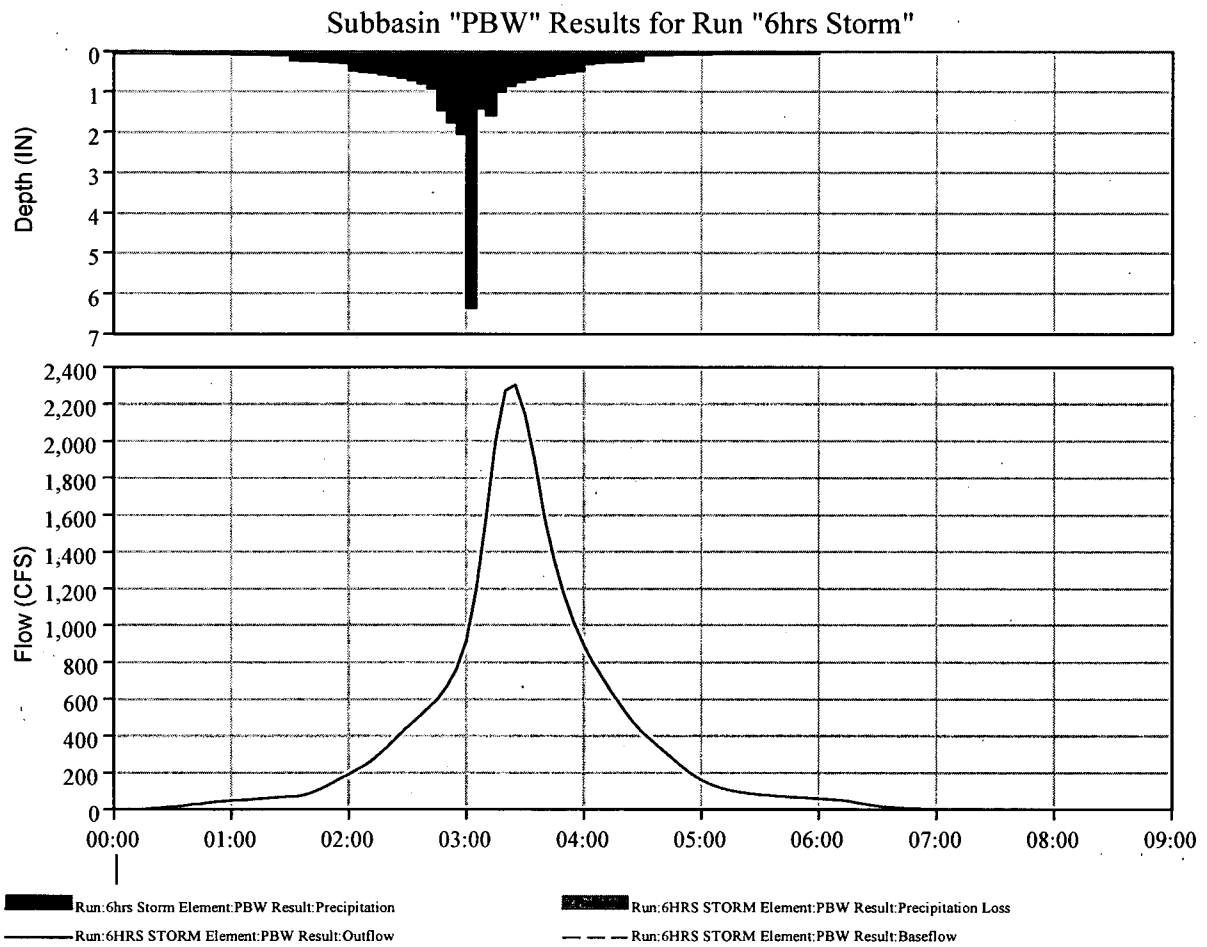

Figure 2 – PBW Local PMP Flood Hydrograph

RAI 02.04.13-10:

QUESTION:

Describe the mechanisms of and effects from floods other than that caused by the postulated breach of the MCR embankment on the Radwaste Building. Postulate the most severe accidental release of radionuclide liquid effluents to the surface water, and provide a conservative analysis of the contamination process for the postulated scenario.

REVISED RESPONSE:

This RAI response is being revised to reflect the revised MCR embankment breach analysis described in the responses to RAI questions 02.04.04-9 and RAI 02.04.04-10, which were submitted on January 28, 2009. The MCR embankment breach analysis was re-evaluated to establish critical embankment breach parameters based on available literature on dam failure case studies. The average breach width used in the present analysis was 417 feet, as opposed to the postulated breach width of 4,757 feet in the analysis documented in COLA Revision 2. On February 23, 2009, STP provided supplements to the responses to RAI questions 02.04.04-9 and RAI 02.04.04-10 that show proposed changes to the COLA that incorporate the results of the revised MCR embankment breach analysis. Additionally, this RAI response is revised to reflect the results of the revised wave run-up analysis on the flood level for the Colorado River cascading dam failures.

The design basis flooding (DBF) elevation for the STP 3 & 4 site is determined by considering a number of different flooding scenarios. The flooding scenarios potentially applicable and investigated for the site include the following: local probable maximum precipitation (PMP) at the site, potential dam failures, probable maximum flood (PMF) on streams and rivers, probable maximum surge and seiche (PMSS), probable maximum tsunami (PMT), flooding due to ice effects, and flooding caused by channel diversions. In applicable cases the flooding scenarios were investigated in conjunction with other flooding and meteorological events, such as wind-generated waves and tidal levels, as recommended in the guidelines presented in ANSI/ANS 2.8-1992 (Reference 2.4S.2-9). Detailed discussions on each of these flooding events and how they were estimated are found in Subsections 2.4S.2 through 2.4S.7, and Subsection 2.4S.9. The estimated flood elevations are based on the site plan provided in the COL application.

The maximum water level due to a local PMP storm event is estimated and discussed in Subsection 2.4S.2. The maximum water level in the power block area due to a local PMP storm event is estimated to be at elevation 36.6 ft MSL. This level is higher than the ground floor elevation of approximately 35 ft MSL at the Radwaste Buildings for Unit 3 and Unit 4, where the postulated accident described in Section 2.4S.13.1.1 occurs. Therefore, a local PMP storm event could potentially pose a flooding risk to a Radwaste Building.

The impacts of postulated dam failures on the STP 3 & 4 safety-related systems, structures and components (SSCs) are discussed in Subsection 2.4S.4. Two aspects of flooding are considered.

First, flood elevation at the site is investigated as a result of cascading failure of dams in the Colorado River basin and its tributaries upstream of the site. The resulting water level at the site is 32.5 ft MSL including coincidental wind set-up, and ~~41.9~~34.4 ft including coincidental wind set-up and wave run-up. Second, the flood elevation at the site is investigated due to the failure of the Main Cooling Reservoir (MCR) embankment. A maximum flood elevation of ~~47.6~~38.8 ft MSL was determined at the STP 3 & 4 site as a result of the MCR embankment breach. ~~This flood elevation of 47.6 ft MSL also constitutes the DBF at the site.~~Conservatively, the design basis flood elevation was established at 40.0 ft MSL.

Estimation of the PMF water level on the Colorado River is discussed in Subsection 2.4S.3. The maximum PMF water level for the Colorado River at the STP 3 & 4 site has been determined to be at elevation 26.3 ft MSL. However, including coincidental wind set-up and wave run-up, the water level at the site from the PMF would be about the same as the flood elevation due to cascading failure of dams in the upstream Colorado River basin (~~41.9~~34.4 ft MSL). Both flooding scenarios could potentially pose a flooding risk to the Radwaste Building.

Flooding from the probable maximum surge and seiche as a result of the probable maximum hurricane (PMH) in the Gulf of Mexico is discussed in Subsection 2.4S.5. The maximum water level at the site due to the PMH is estimated to be elevation 31.1 ft MSL. Since this water level is lower than the water level of 32.5 ft for upstream dam failure (with coincidental wind set-up), the resulting maximum water level at the site after factoring in the wave run-up would be lower than 41.9 ft that was predicted for the upstream cascading dam failure event. However, the water level at the site due to the PMH, including coincidental wind set-up and wave run-up, is still higher than the entrance elevation to the Radwaste Buildings at STP 3 and 4. Therefore, maximum surge and seiche due to the PMH could potentially pose a risk of flooding the Radwaste Buildings.

Subsection 2.4S.6 describes estimation of the probable maximum tsunami water level. The maximum water level associated with a PMT at the STP 3 & 4 site is 16.3 ft MSL. Therefore, the PMT would not be a flood risk to the STP 3 & 4 site. As discussed in Subsections 2.4S.7 and 2.4S.9, ice effects and channel diversions, respectively, would not pose a flooding risk to the STP 3 & 4 site.

Of the several flooding mechanisms considered, other than a breach of the MCR embankment, the local PMP storm, a cascading failure of upstream dams in the Colorado River basin, the PMF, and the PMSS are the four mechanisms that have the potential to flood the Unit 3 and Unit 4 Radwaste Buildings. The local PMP storm potentially could result in release of the greatest concentration of radioactive material to the environment because the flood level from this event would be lower than that from the three other flood mechanisms and, therefore, would provide less dilution if the material were to escape the Radwaste Building.

Four of the five flooding scenarios with the potential to flood the Radwaste Building can be considered a slow-moving event for which advance notice would be available. For this reason, there would be opportunity to initiate operator action to mitigate potential flooding effects. Except during shipment of waste, doors to the Radwaste Building are normally closed to

optimize performance of the HVAC system. Upon receiving a flood warning, plant procedures would require securing the doors and implementing other mitigating action such as sandbagging [COM 19.9-3]. Therefore, none of the flooding mechanisms considered present a credible risk of environmental contamination.

The time needed for initiation of emergency operating procedures during an MCR embankment breach is discussed in the response to RAI 02.04.14-1.

Reference:

2.4S.2-9 "Determining Design Basis Flooding at Power Reactor Sites," ANSI/ANS-2.8-1992, Historical Technical Reference, American Nuclear Society, July 1992.

The second paragraph of Section 2.4S.13.2 will be revised as follows:

> The Radwaste Building is a reinforced concrete structure consisting of Seismic Category I substructure. As described in Section 3.4, the building does not contain safety-related equipment and is not contiguous with other plant structures except through the radwaste piping and tunnel. In case of flooding, the building structure serves as a large sump which can collect and hold ~~any~~ leakage within the building. The medium and large radwaste tanks are housed in sealed compartments which are designed to contain any spillage or leakage from tanks that may rupture.

The following paragraphs will be inserted following the third paragraph of Section 2.4S.13.2:

> The design basis flooding (DBF) elevation for the STP 3 & 4 site is determined by considering a number of different flooding scenarios. The potential flooding scenarios applicable and investigated for the site include the following: local probable maximum precipitation (PMP) at the site, potential dam failures, probable maximum flood (PMF) on streams and rivers, probable maximum surge and seiche (PMSS), probable maximum tsunami (PMT), flooding due to ice effects, and flooding caused by channel diversions. In applicable cases the flooding scenarios were investigated in conjunction with other flooding and meteorological events, such as wind-generated waves and tidal levels, as recommended in the guidelines presented in ANSI/ANS 2.8-1992 (Reference 2.4S.2-9). Detailed discussions on each of these flooding events and how they were estimated are found in Subsections 2.4S.2 through 2.4S.7, and Subsection 2.4S.9. The estimated flood elevations are based on the site plan provided in the COLA.
>
> The maximum water level due to a local PMP storm event is estimated and discussed in Subsection 2.4S.2. The maximum water level in the power block area due to a local PMP storm event is estimated to be at elevation 36.6 ft MSL. This level is higher than the ground floor elevation of approximately 35 ft MSL at the Radwaste Buildings for Units 3 and 4, where the postulated accident described in Section

2.4S.13.1.1 occurs. Therefore, a local PMP storm event could potentially pose a flooding risk to a Radwaste Building.

The impacts of postulated dam failures on the STP 3 & 4 safety-related SSCs are discussed in Subsection 2.4S.4. Two aspects of flooding are considered. First, flood elevation at the site is investigated as a result of cascading failure of dams in the Colorado River basin and its tributaries upstream of the site. The resulting water level at the site is 32.5 ft MSL including coincidental wind set-up, and ~~41.9~~34.4 ft including coincidental wind set-up and wave run-up. Second, the flood elevation at the site is investigated due to the failure of the Main Cooling Reservoir (MCR) embankment. A maximum flood elevation of ~~47.6~~38.8 ft MSL was determined at the STP 3 & 4 site as a result of the MCR embankment breach. ~~This flood elevation of 47.6 ft MSL also constitutes the DBF at the site.~~ Conservatively, the design basis flood elevation was established at 40.0 ft MSL.

Estimation of the PMF water level on the Colorado River is discussed in Subsection 2.4S.3. The maximum PMF water level for the Colorado River at the STP 3 & 4 site has been determined to be at elevation 26.3 ft MSL. However, including coincidental wind set-up and wave run-up, the water level at the site from the PMF would be about the same as the flood elevation due to cascading failure of dams in the upstream Colorado River basin (~~41.9~~34.4 ft MSL). Both flooding scenarios could potentially pose a flooding risk to the Radwaste Building.

Flooding from probable maximum surge and seiche as a result of the probable maximum hurricane (PMH) in the Gulf of Mexico is discussed in Subsection 2.4S.5. The maximum water level at the site due to the PMH is estimated to be elevation 31.1 ft MSL. Since this water level is lower than the water level of 32.5 ft for upstream dam failure (with coincidental wind set-up), the resulting maximum water level at the site after factoring in the wave run-up would be lower than ~~41.9~~34.4 ft that was predicted for the upstream cascading dam failure event. However, the water level at the site due to the PMH, including coincidental wind set-up and wave run-up, is still higher than the entrance elevation to the Radwaste Buildings at STP 3 and STP 4. Therefore, maximum surge and seiche due to the PMH could potentially pose a risk of flooding the Radwaste Buildings.

Subsection 2.4S.6 describes estimation of the probable maximum tsunami water level. The maximum water level associated with a PMT at the STP 3 & 4 site is 16.3 ft MSL. Therefore, the PMT would not be a flood risk to the STP 3 & 4 site. As discussed in Subsections 2.4S.7 and 2.4S.9, ice effects and channel diversions, respectively, would not pose a flooding risk to the STP 3 & 4 site.

Of the several flooding mechanisms considered, other than a breach of the MCR embankment, the local PMP storm, a cascading failure of upstream dams in the Colorado River basin, the PMF and the PMSS are the four mechanisms that have the potential to flood the Unit 3 and Unit 4 Radwaste Buildings. The local PMP storm

potentially could result in release of the greatest concentration of radioactive material to the environment because the flood level from this event would be lower than that from the three other flood mechanisms and, therefore, would provide less dilution if the material were to escape the Radwaste Building.

Other than the MCR breach, each of the four flooding scenarios with the potential to flood the Radwaste Building can be considered a slow-moving event for which advance notice would be available. For this reason, there would be opportunity to initiate operator action to mitigate potential flooding effects. Except during shipment of waste, doors to the Radwaste Building are normally closed to optimize performance of the HVAC system. Upon receiving a flood warning, plant procedures would require securing the doors and implementing other mitigating action such as sandbagging [COM 19.9-3]. Therefore, none of the flooding mechanisms considered present a credible risk of environmental contamination.

RAI 03.04.01-5

QUESTION:

The following statements are unclear. Please clarify the following statements in FSAR Tier 2:

Subsection 3.4.1.1.1:

1) "...flood level arise accomplished"
2) "...exposure to water3.4.1.1.2, site-specific supplements."

Subsection 3.4.2: "...as well as ground and soild pressures, are calculated."

Revise the FSAR accordingly, and provide a markup in your response.

REVISED RESPONSE:

This RAI response is being revised to reflect the revised MCR embankment breach analysis described in the responses to RAI questions 02.04.04-9 and RAI 02.04.04-10, which were submitted on January 28, 2009. The MCR embankment breach analysis was re-evaluated to establish critical embankment breach parameters based on available literature on dam failure case studies. The average breach width used in the present analysis was 417 feet, as opposed to the postulated breach width of 4,757 feet in the analysis documented in COLA Revision 2. On February 23, 2009, STP provided supplements to the responses to RAI questions 02.04.04-9 and RAI 02.04.04-10 that show proposed changes to the COLA that incorporate the results of the revised MCR embankment breach analysis.

The following additional changes to the COLA text will be made in the next revision. The text that is changed from Revision 1 is highlighted with gray shading.

Subsection 3.4.1.1.1:

1) The first sentence will be corrected as shown below:

   Waterproofing of foundations and walls of Seismic Category I structures below ~~grade~~ flood level *~~arise~~ is accomplished principally by the use of water stops at expansion and construction joints.*

2) The last sentence was corrected to deleted the phrase "3.4.1.1.2, site-specific supplements" in COLA Revision 1, submitted to the NRC on January 31, 2008. The sentence now reads:

   In addition to water stops, waterproofing of the plant structures and penetrations that house safety-related systems and components is provided up to 8 cm above the ~~plant ground~~ flood *level to protect the external surfaces from exposure to water.*

Subsection 3.4.2:

This sentence was corrected to delete the "d" from the word "soil" in COLA Revision 1, submitted to the NRC on January 31, 2008. The sentence now reads:

> *Since the design flood elevation is ~~30.5 cm below~~* 414.5182.9 cm above *the finished plant grade, ~~there is no dynamic force due to flood. The~~ the lateral hydrostatic* and hydrodynamic *pressure on the structures due to the design flood water level, as well as ground and soil pressures, are calculated.*