PBMR Research Activities

Mark Mitchell, Scott Penfield, Shahed Fazluddin, Mary Fechter

Presented to: WORKSHOP ON NUCLEAR GRAPHITE RESEARCH, Organized by ORNL and Sponsored NRC. Legacy Hotel and Meeting Center

Rockville, MD – March 16-18, 2009

Overview

- Introduction
  - PBMR and South African framework
  - R&D at PBMR
  - Graphite Reactor Safety Case Model and Life Cycle.
- Activities and Priorities
  - Prioritisation of work:
    - Work supporting build programme
    - Mid Term Research Objectives
  - Presentation of Example Activities
- Integration with International programmes.

PBMR in South Africa

- The following roles are defined in the South African Nuclear Energy Policy*:
- South African Nuclear Energy Corporation (NECSA):
  - The main functions of NECSA are to undertake and promote research and development in the field of nuclear energy and radiation sciences and technology;
  - to process source material, special nuclear material and restricted material and
  - to co-operate with persons in matters falling within these functions.
- The South African utility Eskom
  - Eskom is the owner and operator of the Koeberg Nuclear Power Station. Construction of Koeberg's two reactors commenced in 1976 under a turn-key contract and they have operated safely in the more than 20 years since their commissioning in 1984 and 1985 respectively.
  - Koeberg supplies 1800 MWe to the national grid when both reactors are operating at full power contributing approximately 6% of South Africa's electricity.
  - South Africa's expertise with respect to the management, operation and maintenance of nuclear power plants resides in Eskom.
- Pebble Bed Modular Reactor (Pty) Ltd. (PBMR)
  - The PBMR Company is developing a fuel manufacturing plant and a first of fleet demonstration plants designed to meet Generation IV requirements, applicable to both electricity generation and process heat applications.

*DEPARTMENT OF MINERALS AND ENERGY. NUCLEAR ENERGY POLICY FOR THE REPUBLIC OF SOUTH AFRICA. JUNE 2008

Implications to R&D at PBMR

- PBMR fulfils the role of Nuclear vendor.
- PBMR Focuses on development of the Fuel, Reactor System and it's components, and minimisation of waste.
  - Research efforts directed at near term needs
    - Focus on applications, qualification and characterisation.
  - Expands to consider technology growth path for the PBMR products
  - Collaborate with NECSA and other institutions such as universities where possible on longer term R&D objectives.
- In terms of graphite, the majority of the work in South Africa takes place at PBMR, focussed on supporting our product.
  - PBMR contributes to the Carbon Chair at the University of Pretoria which was established by the DST.
  - PBMR has research contracts with several other universities and companies in this area.

Classification of Areas of Interest

- In order to understand the areas that are receiving attention for graphite, the following information must be considered:
  - South African Regulatory Requirements
  - The Graphite Life-cycle Model: How do we see the graphite life cycle.
  - Graphite Reactor Safety Case Model: The model that is implied by the planned PBMR safety case.
- These two models overlap as the Safety Case Model shows the safety case for the various stages of the life cycle. Both models respond to the South African Regulatory Requirements.
- PBMR has recently completed an effort within the NGNP Project to reconcile the results of the October 2007 PIRTS to U.S. NGNP requirements

South African Regulatory Requirements

- The NNR is not prescriptive, however some specific guidelines and regulations are provided. The key requirements documents are described below.
  - RD-0016 "Requirements for Licensing Submissions Involving Computer Software and Evaluation Models for Safety Calculations"
  - RD-0018 "Basic Licensing Requirements for the Pebble Bed Modular Reactor"
  - RD-0019: Requirements for the Core Design of the Pebble Bed Modular Reactor
  - **LD-1097 "Qualification of the Core Structure Ceramics of the PBMR"**
  - RD-0034 "Quality and Safety Management Requirements for the PBMR"

Graphite Reactor Safety Case Model

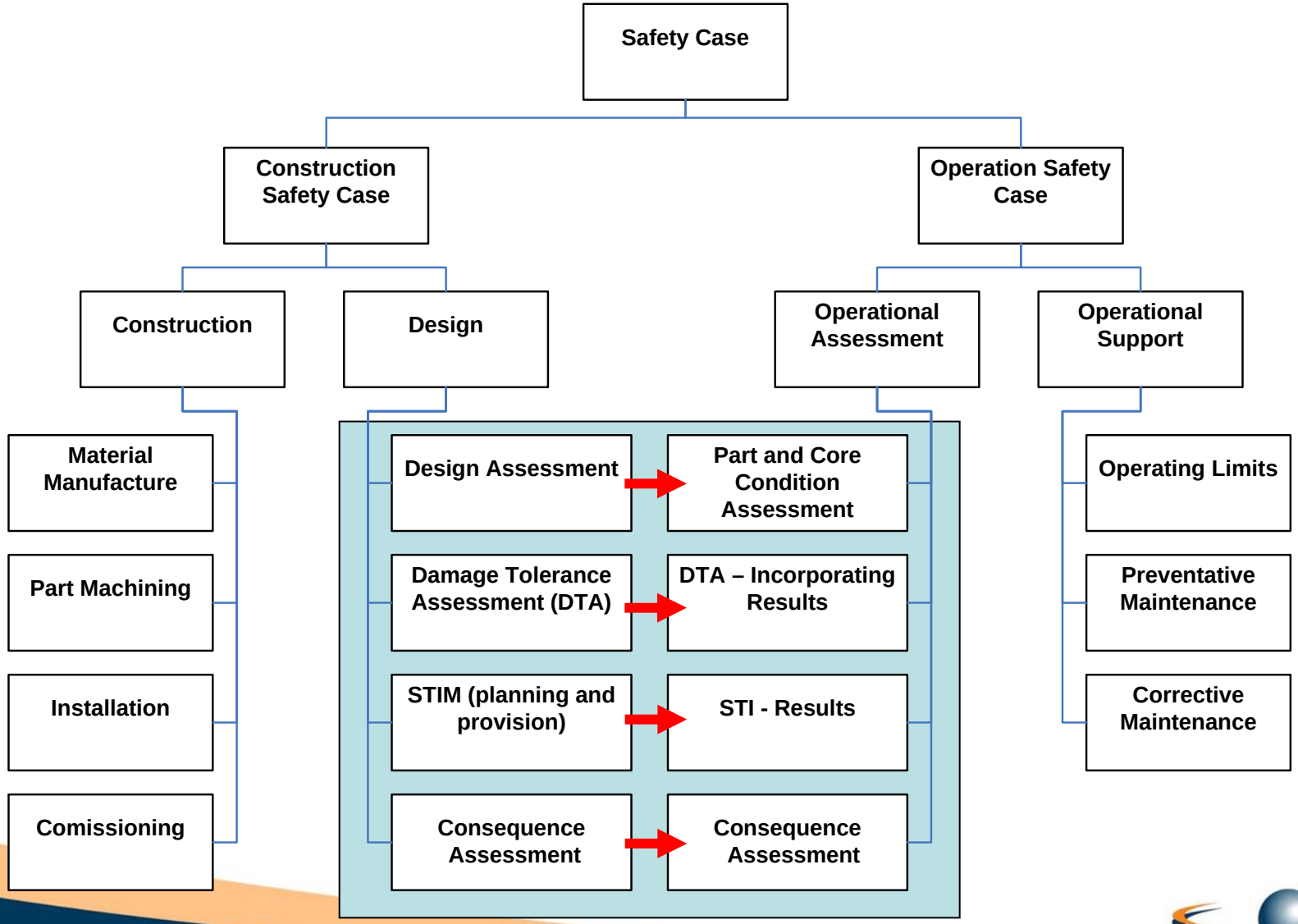

PBMR Graphite Life Cycle Model

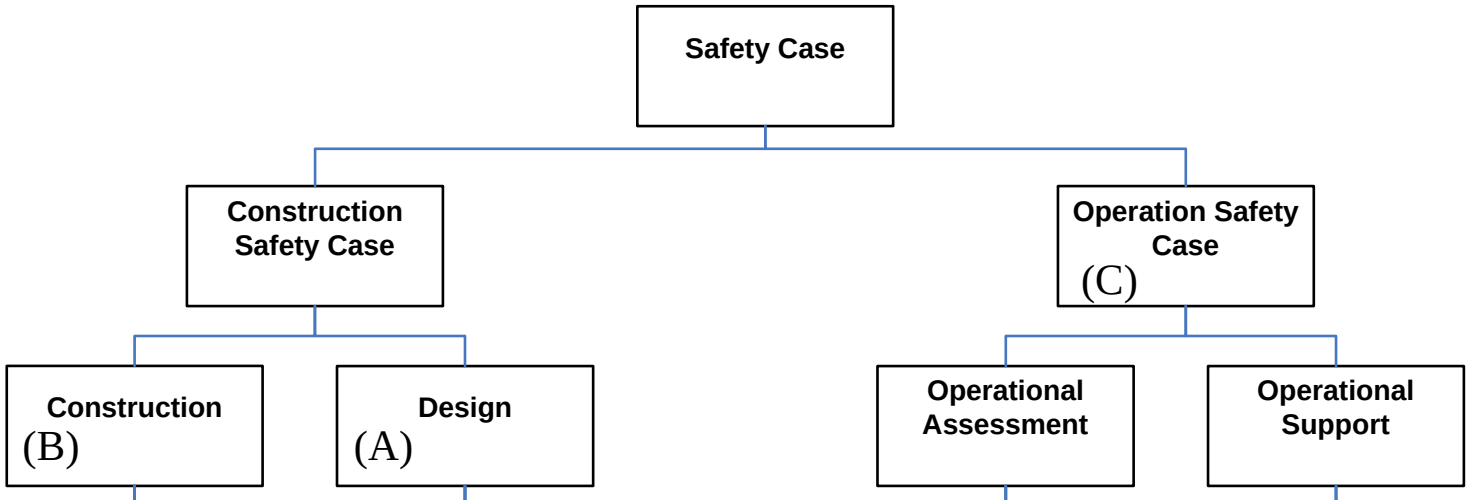

- Our view of the life cycle:
  - (A) Design and Specification
    - Including Characterization / Qualification
  - (B) Construction:
    - Material Manufacture
    - Part Machining
    - Installation & Testing
  - (C) Operation and Maintenance
  - (D) Decommissioning + waste disposal
- Currently PBMR's focus is on the early stages of the life cycle, specifically Design and Construction. Supporting the Construction Safety Case.

Activities

- Work is prioritised:
  - First priority:
    - Design Assessment and Specification
    - Manufacture and Quality Control
    - Establishment of Surveillance, Test Inspection and Maintenance (STIM)
  - Next Priority:
    - Mid-term research goals, focussed on incremental improvements for following reactors.

- Notes:
  - PBMR is committed to the establishment of international standards. Participation in ASTM and ASME.
  - This approach is pragmatic and areas that are of great longer-term interest such as security of supply of graphite raw materials are at present assigned lower priority in the near-term, this is however included in our Technology Development Roadmap.

Design Assessment

- Design Assessment Comprises the following major activities:
  - Integrated Assessments, determine the loads that parts are subjected to due to:
    - Core physics analysis
    - Coolant Flow
    - Temperatures
    - External loads
    - Interaction between parts in the assembly
  - And, Part Assessment, determining the suitability of the parts that comprise the CSC to resist the applied loads. This includes:
    - Non-irradiated part assessment, and
    - Lifetime assessment to determine the life of irradiated parts
  - Additional specialist assessments are completed such as Oxidation (Thermal and Radiolytic) to comply with LD-1097 requirements.
  - Additional Safety Analysis, specifically relating to Dust and Release Calculations.

PBMR Graphite life assessment process

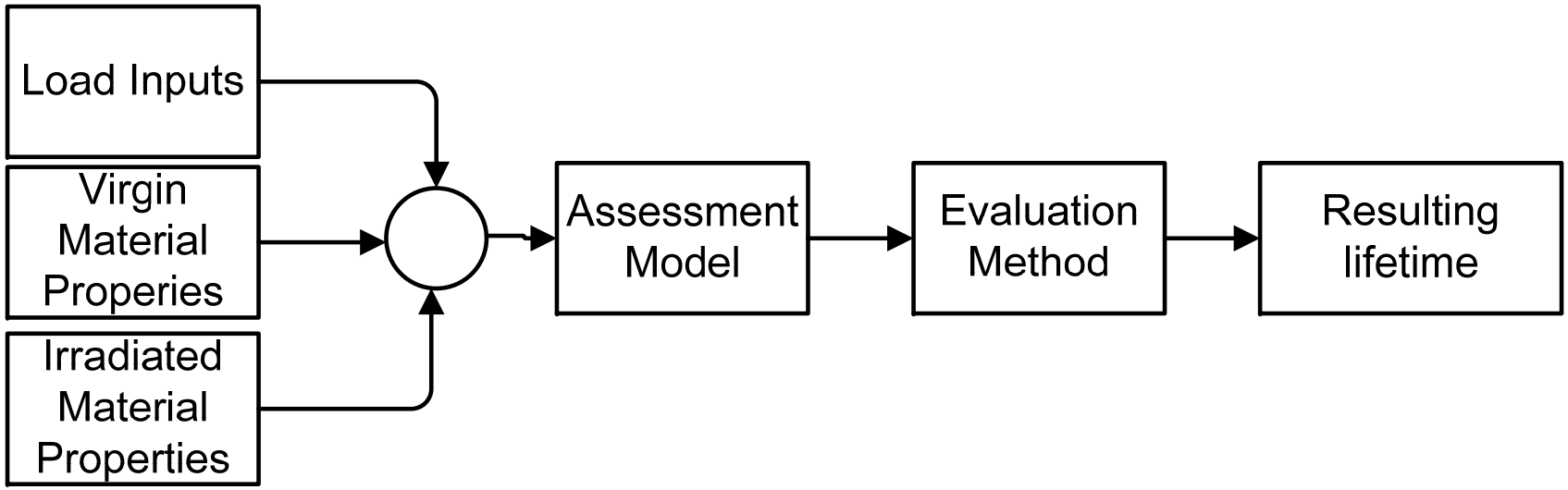

- Described as follows:
  - Load inputs: Flux and temperature fields, external loads etc.
  - Virgin Material Properties: Determine representative material properties for the selected material (Graphite NBG-18)
  - Irradiated Material Properties: Determine representative irradiated material properties
  - Stress analysis: Complete stress analysis to predict the through life stresses in both
    - Non-irradiated parts, and
    - Irradiated parts
  - Stress evaluation, to compare the stress analyses to acceptable limits.

Key Elements Supporting Design Assessment

- Material Selection / Quality Requirements
- Material Production Qualification
- Virgin material characterisation:
  - Material production qualification and property measurement on trial material.
  - Gather data on all properties required in LD-1097 and additional properties used for design.
  - Determination of variability of properties (between charges, within charges and within billets)
  - Provision of design values to be used for design, coupled with determination of specification values to ensure consistent production.
  - Multiple Properties (Strength, Thermal conductivity, Emissivity, …)

Activities Supporting Design Assessment (2) – Irradiated Properties

- Model based on ATR-2E and VQMB data
  - Dimensional change
  - Volume change
  - CTE
  - Thermal conductivity
  - Elastic Modulus
  - Strength
  - Irradiation creep
- The statistical validity of the empirical fits is ensured through the implementation of polynomials of low order with statistically significant coefficients.
- To be Verified by PSMP.

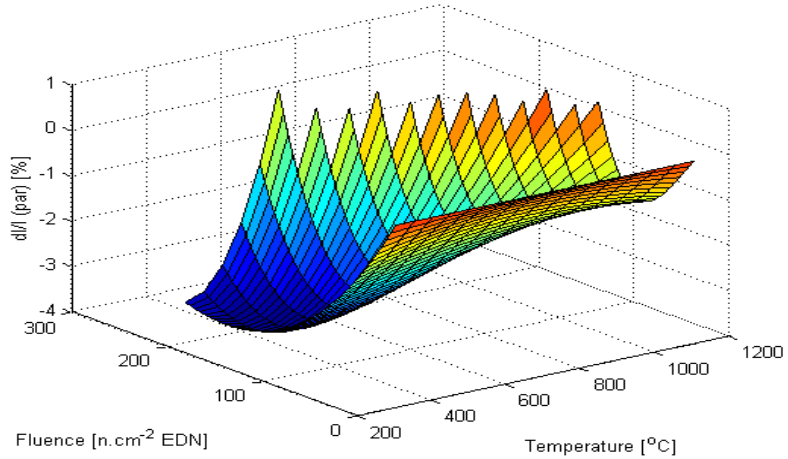

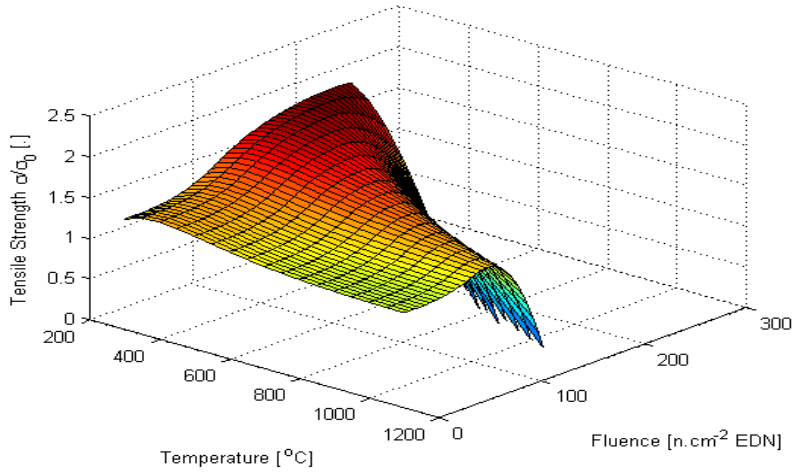

Activities Supporting Design Assessment - PSMP

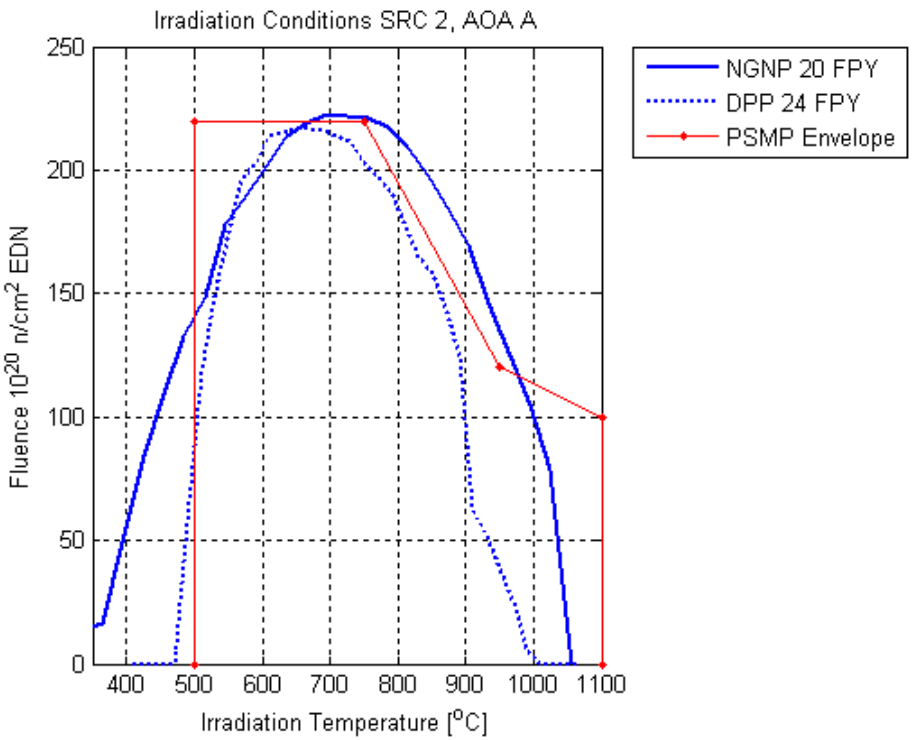

Based on preconceptual design results (Oct-2007)

- PSMP = PBMR Specific Material Test Reactor Programme.
- This programme is designed to characterise the behaviour of NBG-18 under DPP operating conditions to support operation of the CSC. The programme includes the following experiments:-
  - High and low fluence testing of NBG-18, augmented by an extended irradiation strength testing programme.
  - Testing of other materials of interest: SiO_2 based rigid ceramic insulation; Composite materials for control rod applications.

Activities Supporting Design Assessment – PSMP (2)

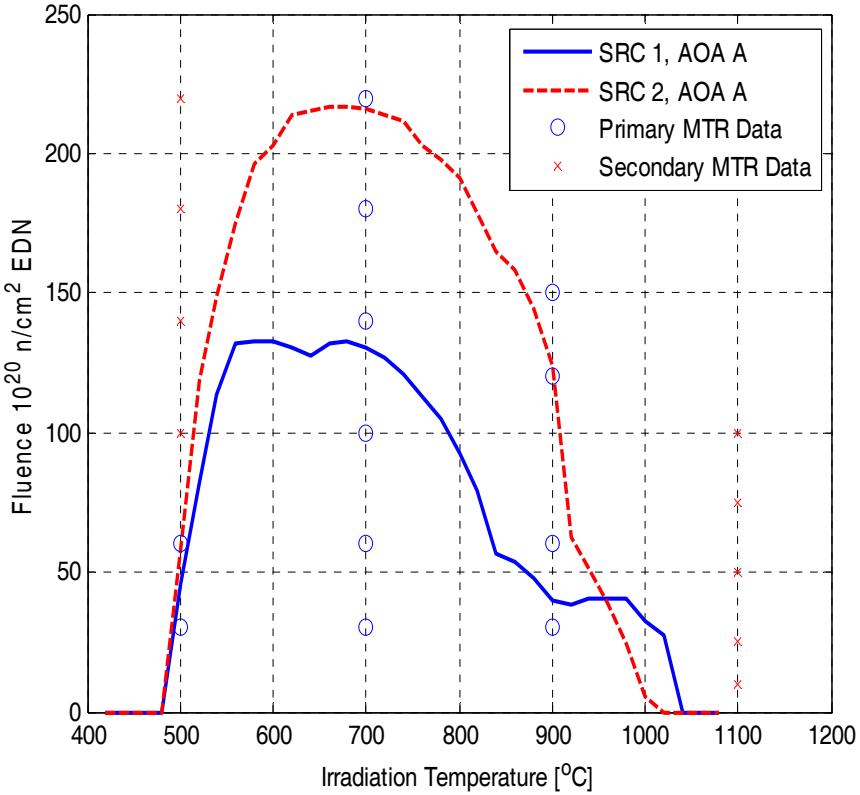

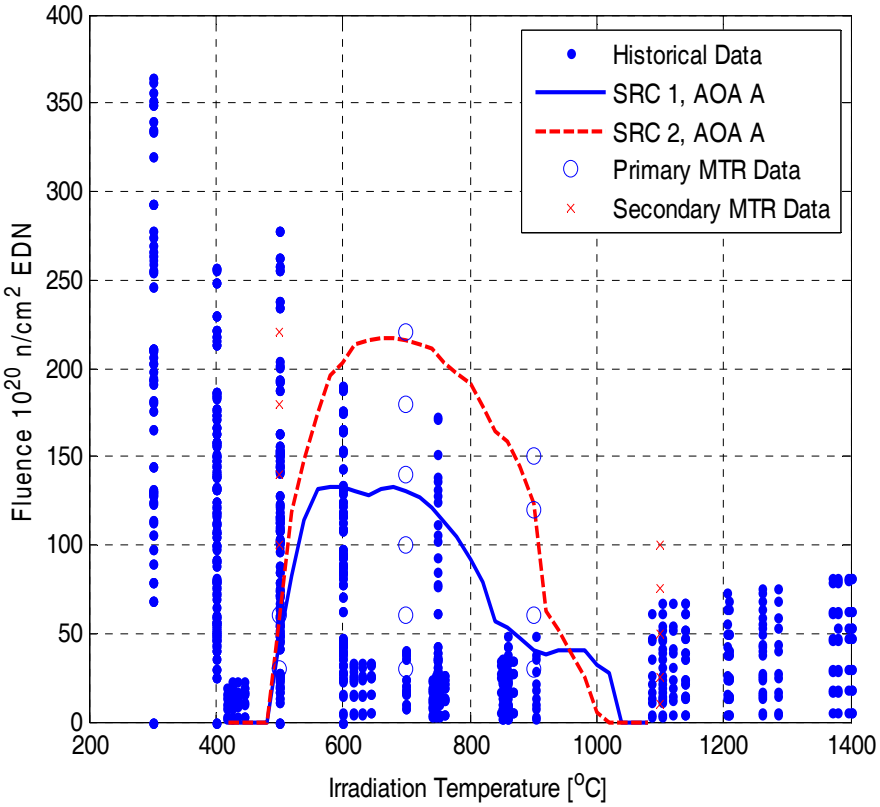

PSMP Planned Material Property Tests

	ID	Property	Direction	Proposed Test Method	Minimum Number of Test Specimens / Remark
PHYSICAL	1.	Mass	Not Applicable	No Standard	Perform measurements on all irradiation test specimens for each irradiation condition Measure lateral dimensions on all irradiated specimens for each condition, i.e. AG, WG
	2.	Dimensions	WG, AG		
	3.	Volume	Not Applicable		
	4.	Density	Not Applicable	ASTM C1039	
	5.	Open Porosity	Not Applicable		
	6.	Pore Size Distribution	Not Applicable	No Standard	Measure 3 select specimens per direction per condition Preference to be given to helium intrusion
	7.	Electrical Resistivity	WG, AG	ASTM C611	6 specimens per direction per condition
	9.	CTE (20°C - 1600°C)	WG, AG		Measure 3 select (20-200°C) specimens per direction per condition
	11.	Thermal Conductivity (RT - 1600°C)	WG, AG		Measure 3 select (RT) specimens per direction per condition
	13.	Microstructural Examination	Not Applicable	No Standard	Examine 3 select specimens per condition
	14.	Activity (Gamma Spectrum)	Not Applicable	No Standard	Measure 2 select specimens per condition after a minimum of 2 decay periods
MECHANICAL	15.	Dynamic Elastic Modulus	WG, AG	ASTM C1198 / ASTM C1259	6 specimens per direction per condition
	16.	Shear Modulus	WG, AG		
	17.	Poisson's Ratio	WG, AG		
	18.	Tensile Strength	WG, AG	ASTM C749	6 specimens per direction per condition
	19.	Strain to Failure	WG, AG	ASTM C749	Derive from stress-strain measurement for each specimen

Irradiation Creep

- For Design Assessment, PBMR uses models based on historical data.
  - Material independent
  - Relate Creep to other properties
- Question on creep behavior after turnaround.
- PBMR plans via cooperative efforts to acquire data from our GenIV partners to validate the models in this area.
- This phenomenon affects our certainty on the end of life. Uncertainty leads to the introduction of large margins and increased inspection.

Activities Supporting Design Assessment – Stress Analysis

- GRMAT implementation described in figures.

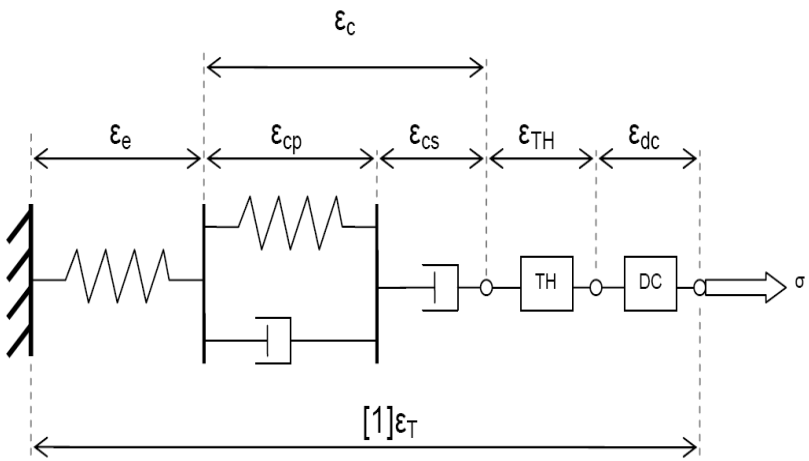

$$\varepsilon_{TOT} = \varepsilon_e + \varepsilon_{cp} + \varepsilon_{cs} + \varepsilon_{TH} + \varepsilon_{dc}$$

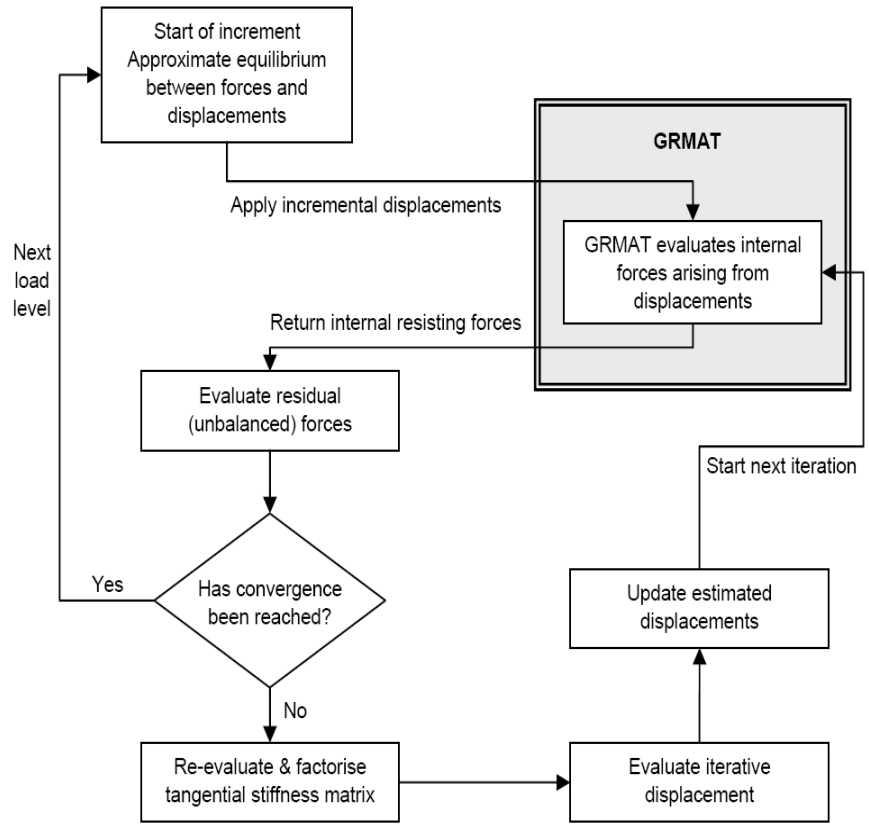

- The accounts for elastic, thermal, dimensional changes and creep strains.

Activities Support Design – Fracture model validation

•Example – Failure prediction validation
AN-18 Dog-bone (Test direction 1)

• 10 Samples of 4 Different fillet radii tested

- 1mm
- 5mm
- 10mm
- 20mm

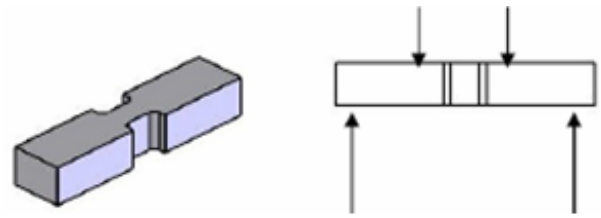

Fillet radius	Median test failure load (N)	Predicted median failure load (N)	Predicted / Test
1 mm	9663	7910	81%
5 mm	10249	8764	86%
10 mm	10991	9142	83%
20 mm	11264	9766	86%

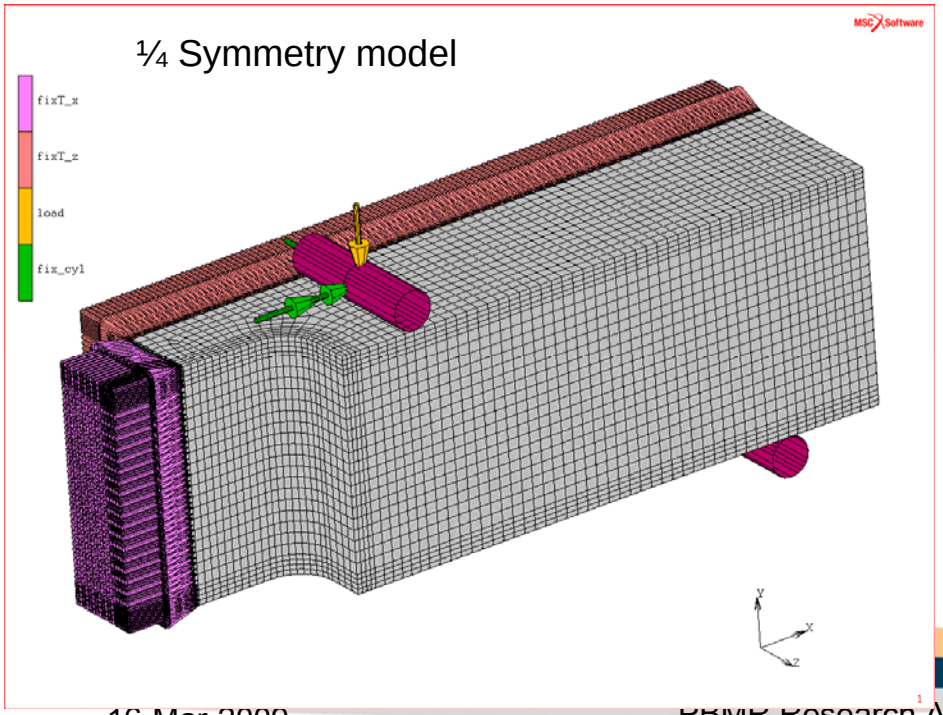

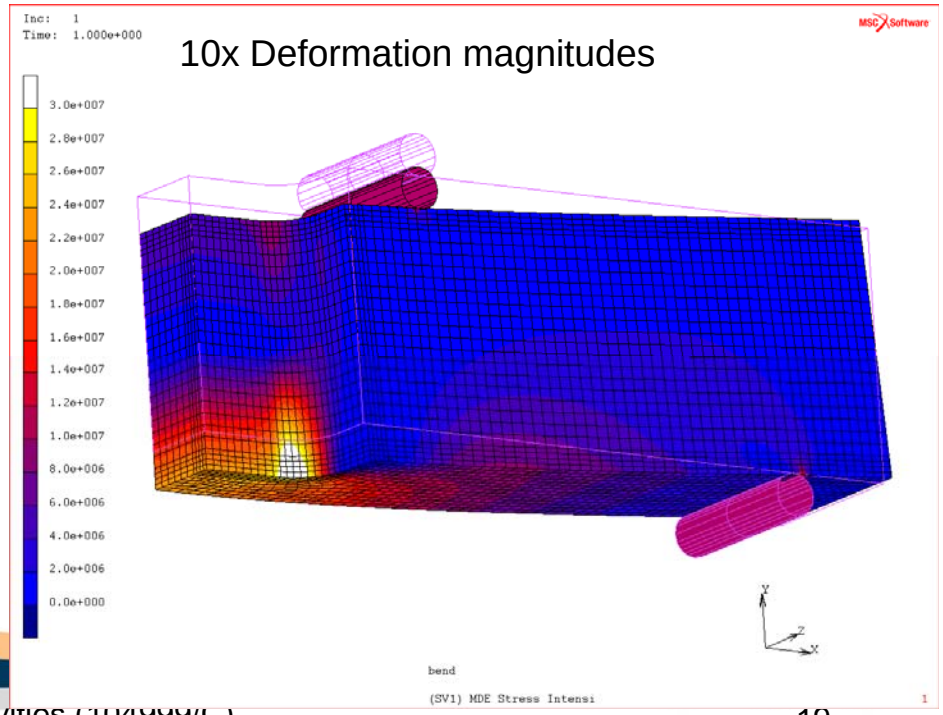

Mid Term Research Activity Focus

- Improved plant performance through management of margins
  - Better understanding of the margins and uncertainties in the design will lead to the ability to improve the efficiency of the design, enhance performance and reduce operating cost.
- Improved plant performance through better quality control on materials and parts
  - The more effective the quality control applied in the manufacture of the CSC materials and components, the better the overall plant performance. This will primarily be due to reduction in outages for repair or replacement and improved confidence in the hardware.
- Improved plant performance through the ability to effectively monitor the performance and condition of the plant in operation
  - The ability to effectively determine the condition of the CSC in service is important to successful plant operation. Any advances made in this field will be beneficial to PBMR.

Integration with International Programmes

- Gen IV International forum, VHTR, Materials and Project Management Group
- 1.1 WP 1 GRAPHITE
  - Task 1. Data, Design Methodology and Construction
    - Task 1.1 Graphite Selection and Qualification Strategy
    - Task 1.2 Graphite Physical and Mechanical Properties (virgin material)
    - Task 1.3 Graphite Fracture Behaviour
    - Task 1.4 Graphite Oxidation Behaviour
    - Task 1.5 Graphite Component Testing
    - Task 1.6 Graphite Irradiation Effects
    - Task 1.7 Graphite Irradiation Induced Creep
    - Task 1.8 Graphite Codes & Standards Development
    - Task 1.9 Graphite Behaviour Model Development
    - Task 1.10 Links to Existing Graphite Irradiation Behaviour Databases
    - Task 1.11 Materials data base
  - Task 2. Data, Design Methodology and Construction
    - Task 2.1 Graphite Qualification Strategy
    - Task 2.1 Methodologies for ISI of graphite cores
  - Task 3. Decommissioning and Disposal
    - Task 3.1 Literature Survey
    - Task 3.2 Defining of project
    - Task 3.3 Decontamination
    - Task 3.4 Recycling
    - Task 3.5 Disposal
- Possible collaboration with other parties.

Conclusion

- PBMR follows a comprehensive approach to developing core graphite technologies for use in the reactor fleet.
  - The examples provided are indicative of both the breadth and depth of the scope.
- This approach is prioritized and supported by mid term R&D objectives.