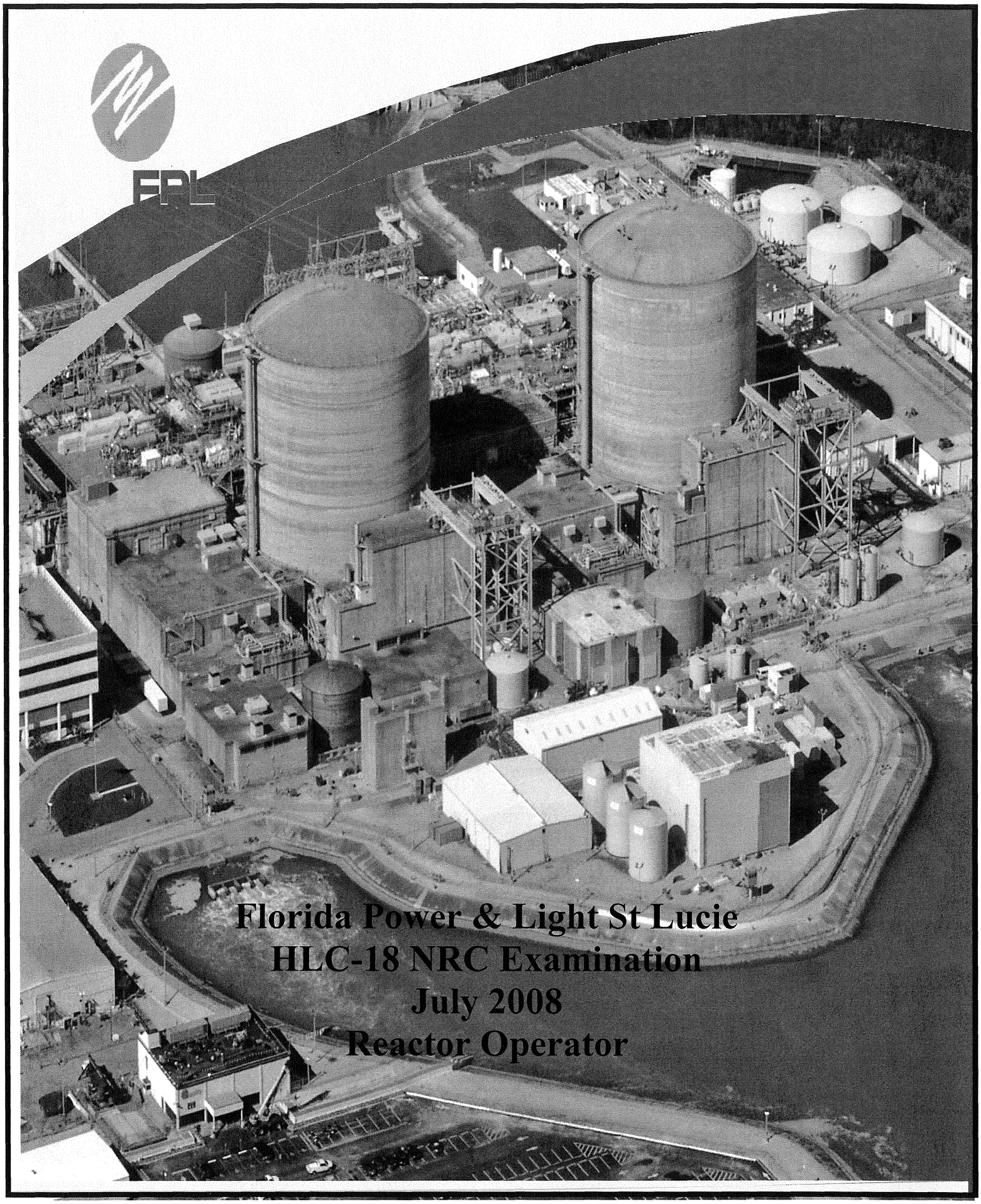

# Florida Power & Light St Lucie
# HLC-18 NRC Examination
# July 2008
# Reactor Operator

Written Examination
Question Worksheet

| Examination Outline Cross-reference: | Level | RO | SRO |
|---|---|---|---|
| | Tier # | 1 | |
| | Group # | 1 | |
| | K/A # | EK2 | |
| | Importance Rating | 3.3 | |

E02 / Reactor Trip Recovery Knowledge of the interrelations between the (Reactor Trip Recovery) and the following: Components, and functions of control and safety systems, including instrumentation, signals, interlocks, failure modes, and automatic and manual features.

Proposed Question: RO 1

Unit 2 tripped from 100% power. 2-EOP-02 is being implemented. Reactor power is $5X10^{-4}$% as indicated on Wide Range Instrumentation. Which of the following correctly describes the status of the Nuclear Startup Channels <u>at this time</u>? ONE

A. Energized. They automatically energize at $10^{-4}$% power.

B. NOT energized. They will energize if the Startup Channel switches are placed in "on".

C. Energized. They automatically energize on the reactor trip signal.

D. NOT energized. They will NOT energize if the Startup Channel switches are placed in "on".

Proposed Answer: D

Explanation (Optional):

A. voltage is automatically *removed* from the startup channels, must be manually energized
B. correct method, power level not low enough
C. reactor trip signal not correct
D. correct

Technical Reference(s): 2-EOP-99, Appendix X, Section 2, 0711403 (Attach if not previously provided)

Proposed references to be provided to applicants during examination: _____

Learning Objective: 0702403-8 (As available)

Question Source: Bank # _____
Modified Bank # _____ (Note changes or attach parent)
New X

Question History: Last NRC Exam _____

Question Cognitive Level: Memory or Fundamental Knowledge x
Comprehension or Analysis _____

10 CFR Part 55 Content: 55.41 7

Written Examination
Question Worksheet

55.43 _____

Comments

**APPENDIX X**
**SECONDARY POST TRIP ACTIONS**
(Page 7 of 8)

**Section 2: CONTROL ROOM ACTIONS** (continued)

| INSTRUCTIONS | CONTINGENCY ACTIONS |
|---|---|
| ☐ **9.** When Turbine speed reaches ZERO rpm, Then VERIFY the turning gear automatically ENGAGES. | ☐ **9.1** PERFORM **ALL** of the following:<br>☐ **A.** PLACE Turning Gear in MANUAL.<br>☐ **B.** VERIFY the Turning Gear Permissive Light is ON.<br>☐ **C.** Locally ENSURE the Turning Gear is ENGAGED.<br>☐ **D.** Locally START the Turning Gear. |
| ☐ **10.** If Reactor power history is low, Then CONSIDER reducing steam generator blowdown flow to maintain RCS temperature. | |
| ☐ **11. Place Boron Dilution Alarm System in Operation.**<br>When indicated Reactor power is less than $10^{-5}$%, Then PERFORM **BOTH** of the following:<br>☐ **A.** ENERGIZE **BOTH** channels of Startup Nuclear Instrumentation to place the Boron Dilution Alarm System in operation.<br>☐ **B.** VERIFY **BOTH** Boron Dilution Alarm System Channels are operating. | ☐ **11.1** If **BOTH** Boron Dilution Alarm System channels are NOT operating, Then PERFORM applicable actions of ONP-02.01, Boron Concentration Control. |

## LOGARITHMIC STARTUP CHANNEL, UNIT 2

Each of the two log startup channels utilizes a boron trifluoride ($BF_3$) detector assembly. Figure 11 illustrates the radial positioning of the detector wells located on the periphery of the reactor. Figure 18 illustrates the axial positioning of an individual detector assembly, in relation to the core midplane.

The detector assembly is a can that contains four detector tubes.

4 separate detector tubes effectively increases the detector target area to the incident neutron-flux, thereby providing the high degree of sensitivity required during low flux conditions.

Each tube interior is filled with boron trifluoride gas ($BF_3$).

Tubes operate in the Proportional Region of the detector characteristic curve, and exhibit gas amplification that makes them very sensitive.

Tubes have a DC potential of 2500 volts applied to them.

- Powered from Reactor Regulation cabinets.

## Unit 2 Logarithmic Startup Channel Circuitry

As illustrated on Figure 18, the detector output is fed to a preamplifier. The preamplifier is located in containment, reducing the effects of plant electrical noise and cable attenuation by amplifying the detector output signal.

The output of the preamplifier is an analog pulse signal that is proportional to the neutron-flux. The discriminator converts this signal into a square wave compatible with the rest of the startup circuitry. This is accomplished by amplifying the signal and passing it through a comparator. The comparator removes gamma-induced pulses by rejecting all input pulses that fall below a preset threshold level. The output of the comparator is a spiked signal, the frequency of which is proportional to the neutron-flux.

The function of the log count rate circuit is to provide an analog output voltage

proportional to the log of the square wave input signal. This function is accomplished by passing the square wave signal through a series of log counter circuits. The output of the counter circuits is a DC voltage proportional to the log of the input pulse count rate.

- The output of the log count rate circuit is displayed locally on a front panel meter. The meter has a log scale that ranges from 1 to $10^5$ cps

- A Startup Count Rate Recorder is also located on RTGB 204.

- The high counts-per-second bistable monitors the log count rate output and actuates a HIGH START-UP CPS alarm light at **~10,000 cps**.

- To prolong the life of the detectors, voltage is automatically removed when power exceeds **~10,000 cps**.

- The operator can also manually remove detector voltage with the switches mounted on RTGB 204.

- MUST manually energize the detectors when decreasing power (at ~$10^{-4}$%) following shutdown.

- A pushbutton on the drawer enables viewing either the Startup or Control Channel detector voltage.

## Audible Countrate Circuitry

The audio count rate (ACR) circuit provides an audible indication of startup detector counts. Because the range of the startup channel is from 1 to $10^5$ counts per second, it is necessary to divide the input count rate to provide the operator with a discernible audio level change during increasing or decreasing counts. The divider network provides a voltage that is proportional to the input frequency. This voltage level is used as an input to a tone generator. The tone generator is capable of producing five tone output frequencies, dependent on the input voltage, increasing in frequency with counts.

The audio count rate circuit provides two audio outputs. One supplies an audio signal to speakers located in the containment, and the other supplies speakers in the control

5. Describe the Unit 1 and 2 instrumentation available to monitor neutron flux during normal, and off-normal operations by:

   A. Listing Nuclear Instruments used to track Reactor power during an approach to criticality.
   B. Identifying all locations where each NI channel can be monitored.
   C. Given a plant condition, listing all Nuclear Instrumentation which would be available.
   D. Identifying the power level indicated by a Wide Range channel meter.

6. Describe the expected response of the Unit 1 and 2 Nuclear Instrumentation System to the following control manipulations performed during NI testing:

   A. Operation of the Linear channel operate calibrate switch.
   B. Operation of the six position calibrate switch.
   C. Operation of the trip test switch.
   D. Operation of the rate calibrate switch.

7. Describe the Unit 1 and 2 Nuclear Instrumentation System response to plant conditions by:

   A. Explaining the traces of NI power from Mode 4 to Mode 1 during a Reactor Start-up.
   B. Explaining the traces of NI power during the first 20 minutes post-trip.
   C. Explaining the traces of NI power following a dropped rod.
   D. Predicting the effect of RCS temperature changes on indicated NI power.
   E. Predicting the effect of fuel depletion on indicated NI power.

8. Describe the operation of the Unit 1 and 2 Nuclear Instrumentation System (including operating bands or setpoints) during normal, off-normal and emergency conditions.

   A. Given a set of plant indications, diagnose a NI channel failure.
   B. State the power range where the Log Counting circuitry is in operation.
   C. State the power range where the Mean Square Voltage circuitry is in operation.
   D. State the power at which the extended range bistable operates.
   E. State the power range where the Low Power Feedwater System is in operation.

9. Describe the signals, bypasses, or interlocks which effect the Unit 1 and 2 Nuclear Instrumentation System operation.

   A. Signal cutouts.
   B. Bistables actuated by NI power level.
   C. Low Power Feedwater.

10. Describe how the wide and linear range channels compensate for gamma flux.

Written Examination
Question Worksheet

| Examination Outline Cross-reference: | Level | RO | SRO |
|---|---|---|---|
| | Tier # | 1 | |
| | Group # | 1 | |
| | K/A # | AA1.08 | |
| | Importance Rating | 3.8 | |

000008 / Pressurizer Vapor Space Accident Ability to operate and / or monitor the following as they apply to the Pressurizer Vapor Space Accident: PRT level pressure and temperature.

Proposed Question: RO 2

Given the following:

- The plant is operating at 100% power, NOP / NOT
- Quench tank pressure is ~~being ma~~intained at 7 psig
- The source of the Quench Tank pressure is Pressurizer Safety Valve (V1201) leakage.

Which of the following is the temperature expected to be seen on the Tailpipe Temperature monitor?

A. 182°F

B. 234°F

C. 306°F

D. 652°F

Proposed Answer: B

Explanation (Optional):

Technical Reference(s): Steam Tables (Attach if not previously provided)

Proposed references to be provided to applicants during examination: Steam Tables

Learning Objective: 0702121-3 (As available)

Question Source: Bank # ____

Modified Bank # ____ (Note changes or attach parent)

New X

Question History: Last NRC Exam ____

Question Cognitive Level: Memory or Fundamental Knowledge ____

Comprehension or Analysis X

10 CFR Part 55 Content: 55.41 7

Written Examination
Question Worksheet

55.43 _____

Comments

Written Examination
Question Worksheet

| Examination Outline Cross-reference: | Level | RO | SRO |
|---|---|---|---|
| | Tier # | 1 | |
| | Group # | 1 | |
| | K/A # | | |
| | Importance Rating | EK3.21 | |

009 / Small Break LOCA / 3 Knowledge of the reasons for the following responses as they apply to the small break LOCA: Actions contained in EOP for small break LOCA / leak.

Proposed Question: RO 3

Unit 1 was manually tripped due to an RCS leak. The following is the sequence of events:

0000 Reactor trip
0011 SIAS actuation
0015 1-EOP-01 Complete / 1-EOP-99, Appendix J complete
0017 1-EOP-03 entry

Current Plant Parameters:

- Containment Pressure 2.8 psig
- Containment Temperature 117°F
- RCS Pressure 575 psia
- RCS Temperature 450°F

Which one of the following describes the correct action required and the reasons, based on current plant conditions?

A. Trip one RCP in each loop to minimize leak flow from the RCS.

B. Trip all RCPs to ensure RCP seal integrity.

C. Trip one RCP in each loop to minimize heat input to the RCS.

D. Trip all RCPs due to insufficient subcooling.

Proposed Answer: D

Explanation (Optional):

A. Would be correct if subcooling met requirements
B. Would be correct if > 10 minutes had elapsed since CCW was lost (on SIAS)
C. Heat input is a reason to trip in EOP-05, not EOP-03
D. Correct (less than adequate subcooling)

Technical Reference(s): 1-EOP-03 (Attach if not previously provided)
1-EOP-99, Figure 1A

Proposed references to be provided to applicants during examination: 1-EOP-99, Figure 1A /

Written Examination
Question Worksheet

1B

Learning Objective: 0702824-6 (As available)

Question Source: Bank # _____

Modified Bank # _____ (Note changes or attach parent)

New x

Question History: Last NRC Exam _____

Question Cognitive Level: Memory or Fundamental Knowledge _____

Comprehension or Analysis x

10 CFR Part 55 Content: 55.41 7

55.43 _____

Comments:

RO-3



**4.0 OPERATOR ACTIONS** (continued)

| INSTRUCTIONS | CONTINGENCY ACTIONS |
|---|---|
| * **6. Maximize SI Flow** | |
| If SIAS is present, Then PERFORM **ALL** of the following: | |
| **A.** ENSURE **ALL** available SI Pumps are RUNNING. | |
| **B.** VERIFY adequate SI flow. **REFER TO** Figure 2, Safety Injection Flow vs. RCS Pressure. | **B.1** TAKE actions to restore SI flow:<br>**1.** ENSURE electrical power to SI pumps and valves.<br>**2.** ENSURE correct SI valve alignment.<br>**3.** ENSURE operation of necessary auxiliary systems. |
| **C.** ENSURE **ALL** available Charging Pumps are RUNNING. | **C.1** If the Charging Header is NOT available, Then CONSIDER charging to the HPSI header. **REFER TO** Appendix T, Alternate Charging Flow Path to RCS Through Aux. HPSI Header. |
| * **7. RCP Trip Strategy** | |
| **A.** If RCS pressure is less than 1600 psia, Then ENSURE **ONE** RCP in **EACH** loop is STOPPED. | |
| **B.** If RCS subcooling is less than minimum subcooling, Then ENSURE **ALL** RCPs are STOPPED. | |
| **C.** If CCW is LOST to the RCPs for greater than 10 minutes, Then STOP **ALL** RCPs. | |

# FIGURE 1A
## RCS PRESSURE TEMPERATURE
(Page 1 of 1)

(Containment Temperature Less Than or Equal to 200°F)

**CAUTION**

The RCP NPSH curve assumes one pump is operating in each loop. RCP instrumentation should be monitored for seal and pump performance in accordance with 1-EOP-99, Table 13.

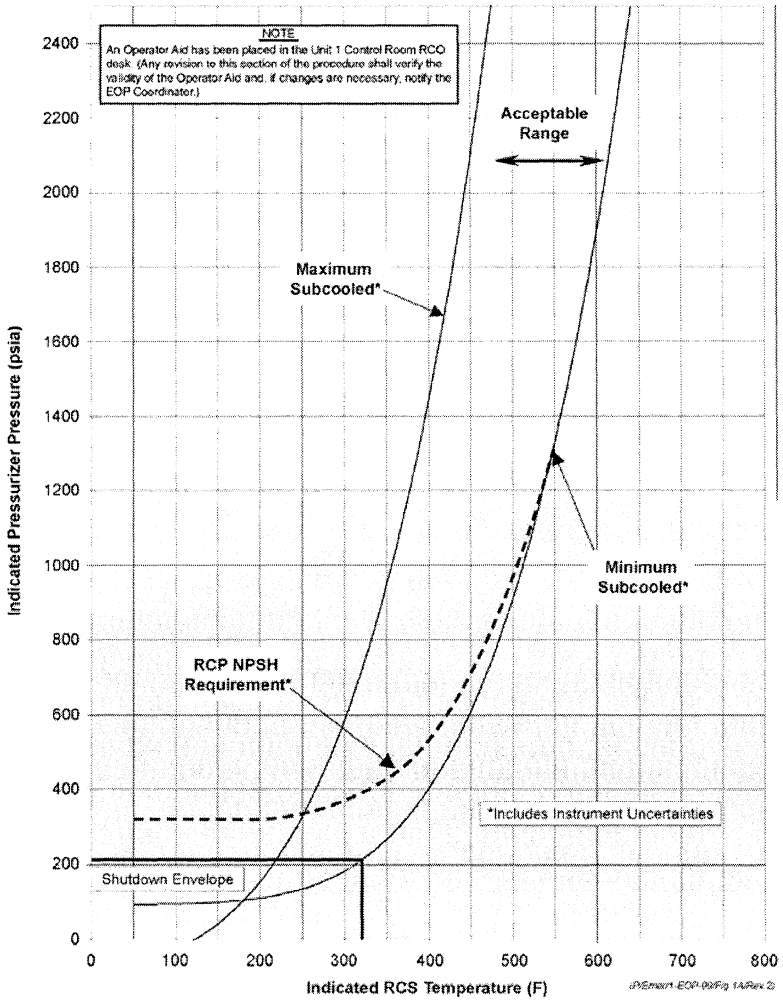


| RCS Pressure Range | Required QSPDS Subcooled Margin Reading (Rep CET) |
|---|---|
| 2250 psia to 1000 psia | 40 to 180°F |
| 1000 psia to 500 psia | 50 to 170°F |
| Less than 500 psia | 80 to 160°F |

/R38

## TERMINAL OBJECTIVE

Given a set of unit conditions, evaluate the XYZ System response to normal, off-normal and emergency operations on a written examination without references unless stated. The student will be able to diagnose and evaluate plant parameters to recognize a loss of coolant accident, assess its severity, and implement the appropriate emergency procedures to mitigate consequences of the event.

## ENABLING OBJECTIVES

1. Define the following terms:

   A. Loss Of Coolant Accident (LOCA)

   B. Harsh Environment

   C. Interfacing System LOCA

2. Describe two types of LOCAs including their distinguishing characteristics, recovery actions and primary heat removal methods.

3. State the Reactor Coolant System and Steam Generator conditions necessary to establish and maintain single-phase natural circulation and state the parameters that are monitored to verify its effectiveness.

4. Describe the two-phase natural circulation (reflux boiling) process and state the parameters that are monitored to verify its effectiveness.

5. Describe the effects that the following factors would have on a LOCA:

   A. RCS and Containment Pressure

   B. Break Location

   C. Reactor Power/Decay Heat

6. Describe the RCP trip strategy for LOCAs.

7. Describe the restrictions that a harsh environment puts on monitoring parameters.

8. Explain the expected trends for the following key parameters during a small break LOCA inside the Containment:

   A. Reactor Power

   B. RCS Temperatures

   C. Pressurizer Pressure

   D. Pressurizer Level

Written Examination
Question Worksheet

| Examination Outline Cross-reference: | Level | RO | SRO |
|---|---|---|---|
| | Tier # | 1 | |
| | Group # | 1 | |
| | K/A # | EK.01 | |
| | Importance Rating | 4.1 | |

009 / Large Break LOCA / 3 Knowledge of the operational implications of the following concepts as they apply to the Large Break LOCA : Natural circulation and cooling, including reflux boiling.

Proposed Question: RO 4

A LOCA /LOOP has occurred on Unit 1 The following are current plant parameters:

- Containment Pressure 12 psig ↑
- Containment Temperature 205°F ↑
- RCS Pressure 680 psia ↓
- RCS Thot 497°F ↔
- RCS Tcold 496°F ↔
- Rep CET Temperature 510°F ↔
- Figure 2 SI Flow 700 gpm ↔
- Steam Generator Levels 45% WR ↑
- Aux Feed Flow 220 gpm / Generator ↔

Which one of the following describes the status of Natural Circulation at this time?

A. Single phase natural circulation is currently being met.

B. Single phase natural circulation will be met when Rep. CET temperature is <485°F.

C. Two-phase natural circulation is currently being met.

D. Two-phase natural circulation will be met when safety injection flow is >780 gpm.

Proposed Answer: D

Explanation (Optional):

A. Would be correct if subcooling were within limits
B. If the correct figure (1B) is used, subcooling still not adequate.
C. Would be met if SI flow were adequate
D. Correct

Technical Reference(s): 1-EOP-03, 1-EOP-99, Figures 1A, 1B, 2 (Attach if not previously provided)

Proposed references to be provided to applicants during examination: 1-EOP-99, figures 1A, 1B and figure 2

Learning Objective: 0702824-3, 4 (As available)

Written Examination
Question Worksheet

| | | | |
|---|---|---|---|
| Question Source: | Bank # | | |
| | Modified Bank # | | (Note changes or attach parent) |
| | New | x | |
| Question History: | Last NRC Exam | | |
| Question Cognitive Level: | Memory or Fundamental Knowledge | | |
| | Comprehension or Analysis | x | |
| 10 CFR Part 55 Content: | 55.41 | 8, 10 | |
| | 55.43 | | |

Comments:

RO-4



**4.0 OPERATOR ACTIONS** (continued)

| INSTRUCTIONS | CONTINGENCY ACTIONS |
|---|---|
| * **31. Verify Single Phase Natural Circulation**<br><br>If **NO** RCPs are operating,<br>Then VERIFY natural circulation flow in at least **ONE** loop by **ALL** of the following:<br><br>• Loop $\Delta T$ ($T_{HOT}$ minus $T_{COLD}$) less than 50°F<br>• Hot leg temperature constant or lowering<br>• Cold leg temperature constant or lowering<br>• RCS subcooling is greater than or equal to minimum subcooling based on Rep CET temperature<br>• NO abnormal difference (greater than 20°F) between $T_{HOT}$ and Rep CET temperature | **31.1** ENSURE proper control of S/G feeding and steaming. |

**4.0 OPERATOR ACTIONS** (continued)

| INSTRUCTIONS | CONTINGENCY ACTIONS |
|---|---|
| * **32. Ensure Two Phase Natural Circulation**<br><br>If **NO** RCPs are operating,<br>and single phase natural circulation can NOT be maintained,<br>Then ENSURE **ALL** of the following conditions exist,<br><br>• **ALL** available Charging pumps are RUNNING<br><br>• SI flow is within the SI flow delivery curve.<br>**REFER TO** Figure 2, Safety Injection Flow vs. RCS Pressure<br><br>• At least **ONE** S/G is available for RCS heat removal with level being maintained or restored to between 60 and 70% NR<br><br>• Rep CET temperature is less than 22°F superheated | |
| * **33. RCP Restart**<br><br>If RCP restart is desired,<br>and **BOTH** of the following conditions are met,<br><br>• Single phase natural circulation flow has existed in the RCS for at least 20 minutes<br><br>• RCP restart criteria are met.<br>**REFER TO** 1-NOP-01.02, Reactor Coolant Pump Operation<br><br>Then START **ONE** RCP in **EACH** loop. | |

## FIGURE 1A
## RCS PRESSURE TEMPERATURE
(Page 1 of 1)

(Containment Temperature Less Than or Equal to 200°F)

**CAUTION**

The RCP NPSH curve assumes one pump is operating in each loop. RCP instrumentation should be monitored for seal and pump performance in accordance with 1-EOP-99, Table 13.

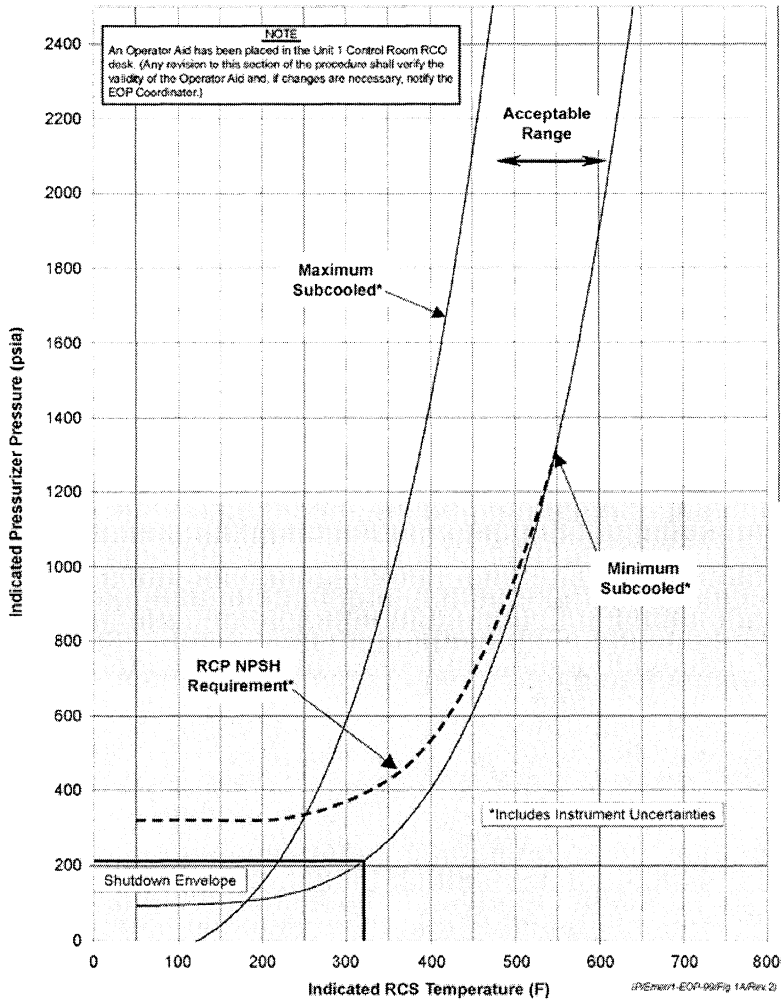


| RCS Pressure Range | Required QSPDS Subcooled Margin Reading (Rep CET) |
|---|---|
| 2250 psia to 1000 psia | 40 to 180°F |
| 1000 psia to 500 psia | 50 to 170°F |
| Less than 500 psia | 80 to 160°F |

/R38

# FIGURE 1B
## RCS PRESSURE TEMPERATURE
(Page 1 of 1)

(Containment Temperature Greater Than 200°F)

**CAUTION**

The RCP NPSH curve assumes one pump is operating in each loop. RCP instrumentation should be monitored for seal and pump performance in accordance with 1-EOP-99, Table 13.

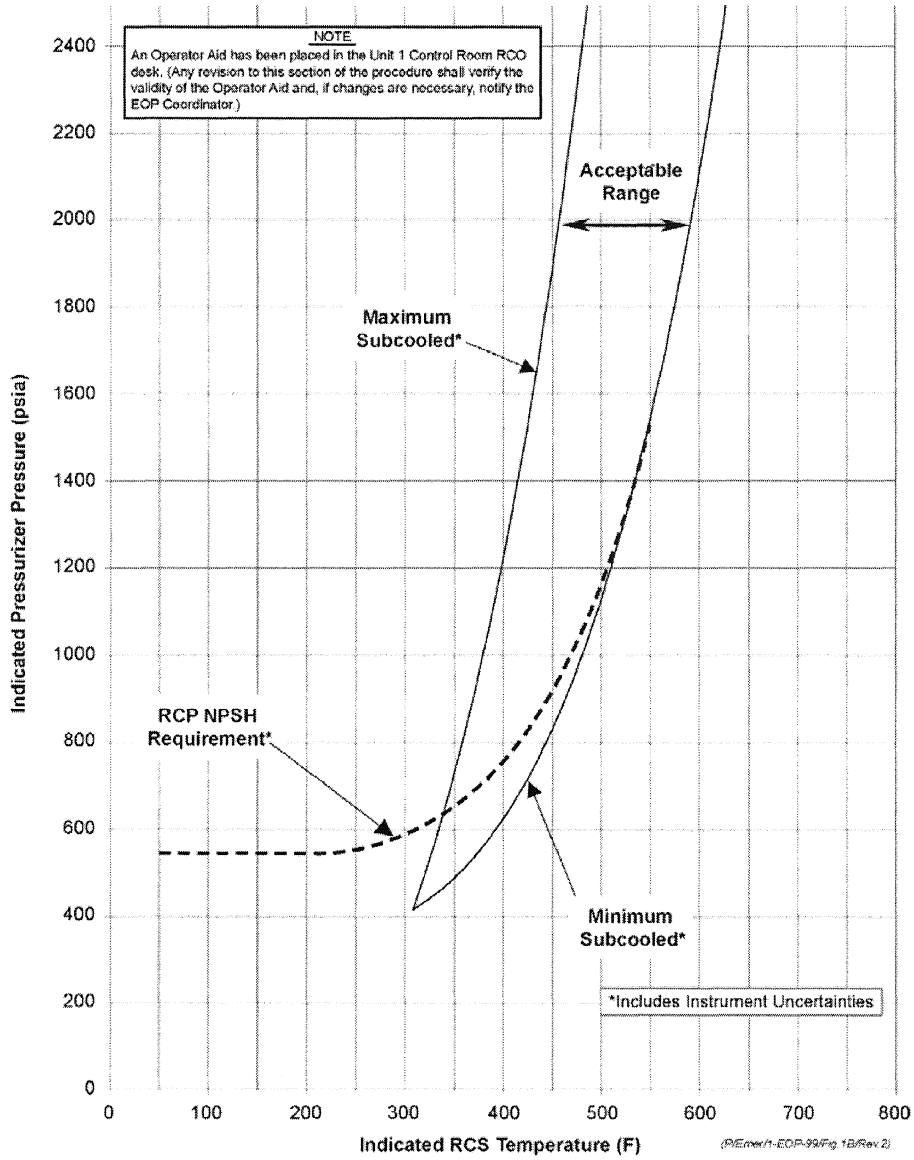

**FIGURE 2**
**SAFETY INJECTION FLOW VS. RCS PRESSURE**
(Page 1 of 1)

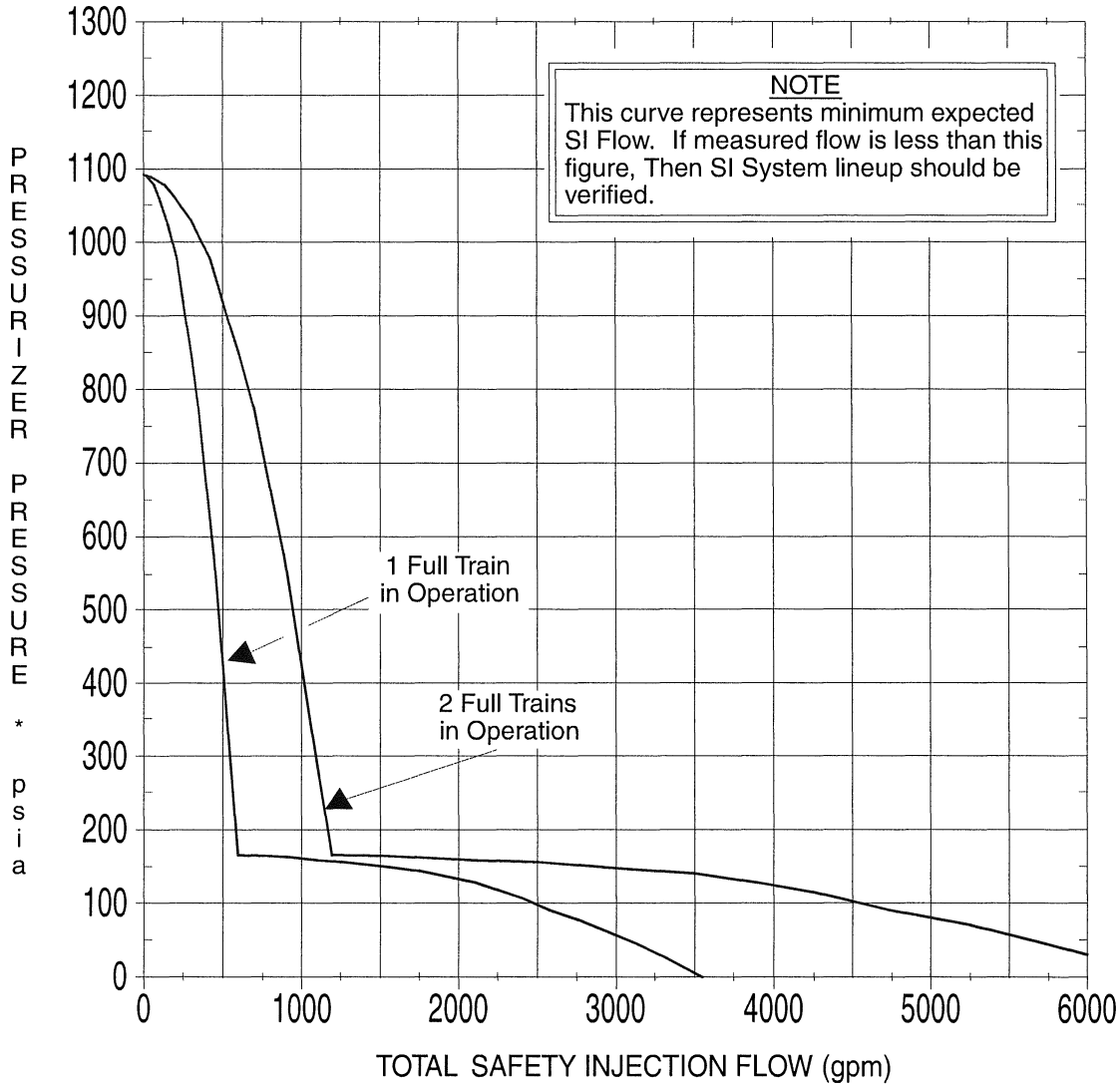


*(P/EOP/1-EOP-99-F2-R0)*

## TERMINAL OBJECTIVE

Given a set of unit conditions, evaluate the XYZ System response to normal, off-normal and emergency operations on a written examination without references unless stated. The student will be able to diagnose and evaluate plant parameters to recognize a loss of coolant accident, assess its severity, and implement the appropriate emergency procedures to mitigate consequences of the event.

## ENABLING OBJECTIVES

1. Define the following terms:

   A. Loss Of Coolant Accident (LOCA)

   B. Harsh Environment

   C. Interfacing System LOCA

2. Describe two types of LOCAs including their distinguishing characteristics, recovery actions and primary heat removal methods.

3. State the Reactor Coolant System and Steam Generator conditions necessary to establish and maintain single-phase natural circulation and state the parameters that are monitored to verify its effectiveness.

4. Describe the two-phase natural circulation (reflux boiling) process and state the parameters that are monitored to verify its effectiveness.

5. Describe the effects that the following factors would have on a LOCA:

   A. RCS and Containment Pressure

   B. Break Location

   C. Reactor Power/Decay Heat

6. Describe the RCP trip strategy for LOCAs.

7. Describe the restrictions that a harsh environment puts on monitoring parameters.

8. Explain the expected trends for the following key parameters during a small break LOCA inside the Containment:

   A. Reactor Power

   B. RCS Temperatures

   C. Pressurizer Pressure

   D. Pressurizer Level

Written Examination
Question Worksheet

| Examination Outline Cross-reference: | Level | RO | SRO |
|---|---|---|---|
| | Tier # | 1 | |
| | Group # | 1 | |
| | K/A # | AK2.10 | |
| | Importance Rating | 2.8 | |

015/017 / RCP Malfunctions Knowledge of the interrelations between the Reactor Coolant Pump Malfunctions (Loss of RC Flow) and the following: RCP indicators and controls.

Proposed Question: RO 5

During operation at 80% power, the Unit 2 Reactor Coolant Pumps' seal readings indicate as follows:

| | PRESSURE (PSIG) | | | FLOW (GPM) | TEMPERATURE |
|---|---|---|---|---|---|
| PUMP | Bleedoff Cavity | Upper Seal Cavity | Middle Seal Cavity | Controlled Bleedoff | Controlled Bleedoff |
| 2A1 | 156 | 1080 | 1170 | 1.9 | 173 |
| 2A2 | 124 | 685 | 1588 | 1.1 | 148 |
| 2B1 | 176 | 180 | 2221 | 2.8 | 187 |
| 2B2 | 119 | 782 | 1505 | 0.9 | 143 |

Based on these indications, the operating crew should:

A. Monitor and record RCP seal parameters for additional degradation.

B. Begin unit shutdown, then monitor the affected RCP for further degradation.

C. Begin unit shutdown, then stop the affected RCP after the TCB's are open.

D. Manually trip the reactor and turbine, then trip the affected RCP(s).

Proposed Answer: C

Explanation (Optional):

A. Two failed seals, shutdown
B. Action for 2 seals failed without stopping RCP
C. Correct Action for 2 seals failed (on the same pump) without stopping RCP
D. Action for 3 seals failed

Technical Reference(s): 2-0120034 (Attach if not previously provided)

Proposed references to be provided to applicants during examination: _____

Learning Objective: 0702202-7 (As available)

Written Examination
Question Worksheet

| | | | |
|---|---|---|---|
| Question Source: | Bank # | | |
| | Modified Bank # | | (Note changes or attach parent) |
| | New | x | |
| Question History: | Last NRC Exam | | |
| Question Cognitive Level: | Memory or Fundamental Knowledge | | |
| | Comprehension or Analysis | x | |
| 10 CFR Part 55 Content: | 55.41 | 7 | |
| | 55.43 | | |

Comments

RO-5



**6.3 RCP Seal Problems/Anomalies** (continued)

## INSTRUCTIONS

**5.** If Controlled Bleedoff flow is Lost or Low, Then ENSURE the following:

**A.** V2505, RCP Bleedoff Cntmt Isol, is OPEN.

**B.** V2524, RCP Bleedoff Cntmt Isol, is OPEN.

**C.** Normal Bleedoff Flow for affected RCP(s) has been established.

**6.** * If CBO flow can NOT be reestablished within 30 minutes, Then PERFORM the following:

**A.** TRIP the Reactor.

**B.** TRIP the Turbine.

**C.** STOP all RCPs.

**D.** **IMPLEMENT 2-EOP- 01, Standard Post Trip Actions.**

**7.** If any seal has failed, as indicated by a loss of differential pressure across the seal, Then TAKE 30 minute readings on controlled bleedoff flow and cavity pressures, using Data Sheet 1, until it is determined that additional seal degradation is NOT occurring.

**8.** **If two seals have failed, Then:**

**A.** **NOTIFY the system dispatcher.**

**B.** **BEGIN a unit shutdown.**

**C.** **When CEA TCBs are open, Then STOP the affected RCP.**

## CONTINGENCY ACTIONS

**5.1** If normal Controlled Bleedoff can NOT be VERIFIED, Then OPEN V2507, RCP Bleedoff Relief Stop Vlv.

/R32A

**6.3 RCP Seal Problems/Anomalies** (continued)

| INSTRUCTIONS | CONTINGENCY ACTIONS |
|---|---|

**9.** If three seals have failed,
Then:

**A.** TRIP the reactor.

**B.** TRIP the turbine.

**C.** STOP the affected RCP(s).

**D.** **IMPLEMENT 2-EOP- 01, Standard Post Trip Actions.**

> **NOTE**
> Annunciator R-8, SIAS Channel A/B Actuation Block Permissive, alarms at a setpoint of 1836 psia.

**10.** * If a RCP has been Stopped while in Hot Standby or Mode 1 conditions and a reactor plant cooldown is not to be performed, Then DEPRESSURIZE the RCS to between **1800 psia to 1850 psia** to maintain RCP lower seal cavity temperature less than 300°F.

**END OF SECTION 6.3**

3) SIAS/CIAS.*

4. Evaluate the physical interfaces between the RCPs and other plant systems by:

   a. Predicting the effect of a loss of Component Cooling Water (CCW) on RCP operation.*

   b. Predicting the effects of the following features on the RCP intergral heat exchanger outlet valve:

      1) Loss of instrument air.*

      2) Loss of control power.*

5. Identify the power sources for the following:

   a. RCPs*

   b. RCP oil lift pumps

6. Describe how the operation of the RCPs can affect the following;

   a. RCS temperatures*

   b. DNBR*

7. Evaluate the operation of the RCPs (including operating bands or setpoints) during normal, off-normal and emergency conditions by:

   a. Explaining the general sequence for starting an RCP.

   b. Describing how the reactor trip on Unit 2 monitors Component Cooling Water (CCW) flow.

   c. Diagnosing a failure in the RCP seal assembly, given seal temperatures, pressures and flow.

   d. Describing how to diagnose a leak at the RCP casing/cover interface.

   e. Diagnosing a failure in the RCP Lube Oil System, given bearing temperatures and oil levels.

8. Analyze the signals (including bypasses and interlocks) which affect system operation by:

   a. Describing the automatic control features of the RCP oil lift pumps.

   b. Describing the interlocks associated with the RCP seal water injection system.

   c. Describing the automatic actions associated with the Seal Heat Exchanger outlet valve.

   d. Listing the inputs with setpoints for the RCP Start Permissive

Written Examination
Question Worksheet

| Examination Outline Cross-reference: | Level | RO | SRO |
|---|---|---|---|
| | Tier # | 1 | |
| | Group # | 1 | |
| | K/A # | AK3.02 | |
| | Importance Rating | | |

022 / Loss of Reactor Coolant Makeup Knowledge of the reasons for the following responses as they apply to the Loss of Reactor Coolant Makeup: Actions contained in SOPs and EOPs for RCPs, loss of makeup, loss of charging, and abnormal charging.

Proposed Question: RO 6

Unit 2 is at 100% power. Only 2A charging pump is in service and trips due to an electrical fault. All other charging pumps and letdown valves are in Auto. 1) Which one of the following describes the correct operator action 2) What is the result if operator action is NOT taken?

A. 1) Manually start another charging pump. 2) ion exchanger bypass valve V2520 will open and divert letdown flow to the Holdup tanks.

B. 1) Manually isolate letdown 2) letdown isolation valve V2515 will close on high Regen HX outlet temperature.

C. 1) Manually start another charging pump 2) the designated back-up charging pump will auto start on pressurizer level deviation.

D. 1) Manually isolate letdown 2) letdown isolation valve V2516 will close on high $\Delta P$ across the regen HX.

.

Proposed Answer: B

Explanation (Optional):

A. Incorrect manual action, letdown will isolate prior to V2520 auto open.
B. Correct
C. Incorrect manual action, letdown will isolate prior to charging pump start.
D. Correct manual action, but isolation would happen on tube leak in regen hx.

Technical Reference(s): 1-ONP-02.03 (Attach if not previously provided)

Proposed references to be provided to applicants during examination: None

Learning Objective: 0702205-9 (As available)

Question Source: Bank #

Modified Bank # (Note changes or attach parent)

New X

Question History: Last NRC Exam

Question Cognitive Level: Memory or Fundamental Knowledge

Comprehension or Analysis X

Written Examination
Question Worksheet

10 CFR Part 55 Content: 55.41 5
55.43 _____

Comments:

Ro·6



## 6.0 OPERATOR ACTIONS

| INSTRUCTIONS | CONTINGENCY ACTIONS |
|---|---|
| **1.** If letdown flow is lost, Then STOP the charging pumps. | |
| **A.** RETURN the charging pump control switches to AUTO. | |

**CAUTION**

Severe thermal stress and flashing may occur in the Regenerative Heat Exchanger if letdown flow is NOT immediately isolated.

| | |
|---|---|
| **2.** If charging flow is lost, Then ISOLATE letdown. | **2.1** ISOLATE Letdown by the following: |
| | **A.** CLOSE V2515, Stop Valve-IC |
| | **B.** CLOSE V-2516, Containment Isol Valve-IC. |
| | **C.** CLOSE V2522, Containment Isol Valve-OC. |

**NOTE**

With Charging and Letdown isolated pressurizer level will lower slowly due to RCP controlled bleedoff flow.

**3.** If charging and letdown flow has been lost, Then MAINTAIN Reactor power and RCS temperature constant to minimize pressurizer level deviations.

**4.** VERIFY all applicable automatic actions have occurred. Appendix A contains a listing of expected automatic actions.

## APPENDIX A
## CHARGING AND LETDOWN AUTOMATIC RESPONSES.
(Page 1 of 1)

1. Regenerative heat exchanger high outlet temperature of 470°F closes V2515, Stop Valve-IC.

2. High ΔP across the regenerative heat exchanger of 275 psid closes V2516, Containment Isol. Valve-IC.

3. Charging pumps trip on low suction pressure of 10 psia.

4. Letdown heat exchanger high outlet temperature of 140°F, V2520, Ion Exchanger Bypass Valve, diverts letdown flow around the purification ion exchangers.

5. Charging pumps trip on low oil pressure of 4 psig.

**END OF APPENDIX A**

Written Examination
Question Worksheet

| Examination Outline Cross-reference: | Level | RO | SRO |
|---|---|---|---|
| | Tier # | 1 | |
| | Group # | 1 | |
| | K/A # | AA2.05 | |
| | Importance Rating | 3.2 | |

025 / Loss of RHR System / 4 Ability to determine and interpret the following as they apply to the Loss of Residual Heat Removal System: Existence of proper RHR overpressure protection.

Proposed Question: RO 7

Unit 2 is in mode 4, solid pressure control in service, with the following plant conditions:

- RCS pressure is 265 psia
- RCS temperature is 245°F
- 2A Shutdown Cooling Train has just been placed in service
- A large pressure transient occurs in the RCS

Which one of the following is the MAXIMUM RCS pressure that would be reached prior to overpressure protection actuation?

A. 275 psia

B. 350 psia

C. 470 psia

D. 530 psia

Proposed Answer B

Explanation (Optional):

A. Maximum pressure for SDC operation per 2-GOP-305
B. Correct
C. Unit 2 LTOP setpoint
D. Unit 1 LTOP setpoint

Technical Reference(s): 1-GOP-305, 2-GOP-305, 0711206, 0711207 (Attach if not previously provided)

Proposed references to be provided to applicants during examination: none

Learning Objective: 0702206-12 (As available)

Question Source: Bank # ____
Modified Bank # ____ (Note changes or attach parent)
New x

Question History: Last NRC Exam ____

Written Examination
Question Worksheet

| | | |
|---|---|---|
| Question Cognitive Level: | Memory or Fundamental Knowledge | _____ |
| | Comprehension or Analysis | x |
| 10 CFR Part 55 Content: | 55.41 | 7 |
| | 55.43 | _____ |

Comments:

Ro-7



**CAUTION**

The maximum RCS pressure for SDC operation is 275 psia. The minimum RCS pressure for RCP operation is determined from 2-NOP-01.02, Reactor Coolant Pump Operation, Appendix B, Minimum RCS Pressure for RCP Operation.

**6.26** REFER to 2-NOP-01.02, Appendix B, to determine the minimum RCS pressures for the operating RCP combination and RECORD below. _____

**TABLE 1**
MINIMUM RCS PRESSURE FOR RCP OPERATION
RCPs Operating: _____ _____

| RCS TEMP °F | MIN RCS PRESS psia |
|---|---|
| 350 | |
| 325 | |
| 300 | |
| 275 | |
| 250 | |
| 225 | |
| 200 | |
| 175 | |
| 150 | |

**6.27** ENSURE the following SIT status:

**1.** All un-isolated SIT pressures are less than or equal to 240 psig. _____

**2.** All operable SIT pressures are between 235 psig and 240 psig. _____

**6.28** LOWER RCS pressure to satisfy the following criteria:

**1.** Less than 275 psia.

**2.** Greater than the highest pressure un-isolated SIT.

**3.** Greater than the minimum RCS pressure for RCP operation. _____

INITIAL

**6.29** (continued)

**3.** (continued)

**D.** VERIFY V3634, 2B1 Isolation, is CLOSED. ___/___ IV

**4.** PERFORM the following for the 2B2 SIT:

**A.** CLOSE Bkr. 2-42048, Safety Inject Tank 2B-2 Disch Va. V3644. _____

**B.** CLOSE V3644, 2B2 Isolation. _____

**C.** If required, Then RECORD the closing stroke time of V3644, 2B2 Outlet, on Data Sheet 10, Non-Check Valves Cycled During Cooldown, Cold and Heatup Conditions, of OP-2-0010125A, Surveillance Data Sheets. _____

**D.** VERIFY V3644, 2B2 Isolation, is CLOSED. ___/___ IV

**NOTE**

When opening the SDC suction isolation valves, RCS pressure should be maintained at the low end of the band between 275 psia and the minimum RCP pressure requirements for RCP operation to avoid challenging the SDC suction relief valves.

**6.30** When the SITs are isolated, Then MAINTAIN RCS pressure as low as possible while maintaining minimum RCP pressure requirements for RCP operation as determined from 2-NOP-01.02, Appendix B. _____

**CAUTION**

¶4 The amount of time the SDC System is operated with RCS temperature above 300°F should be minimized. Prolonged operation at elevated temperatures may result in undesirable rates of LPSI pump seal degradation.

**6.31** PLACE the SDC System in service in accordance with 2-NOP-03.05, Shutdown Cooling. _____

**6.32** If repetitive cycling of the RCP LOW CCW 10-Minute Timer alarm is indicated, Then PLACE CS-206-1 through CS-206-4 (located inside RTGB 206) in the Test Position to lock in the alarm input to the DCS. The keys are kept in the ESFAS Key Locker in the MT&E lab. _____ SRO

INITIAL

**CAUTION**

- ¶4 The amount of time the SDC System is operated with RCS temperature above 300°F should be minimized. Prolonged operation at elevated temperatures may result in undesirable rates of LPSI Pump seal degradation.
- LTOP is required to be placed in service with a setpoint of 530 psia prior to lowering RCS temperature to less than or equal to 281°F. Ref: Tech Spec 3.4.13.

**NOTE**

If common train ECCS work is required, the following step may be bypassed until the completion of the work. The cooldown may continue using the ADVs or SBCS.

**6.30** Place the SDC System in service in accordance with 1-NOP-03.05, Shutdown Cooling. _____

**6.31** Direct ENG / CSI to perform the applicable portion of Appendix B, RCS / Pressurizer Nozzle Penetration Checks, of OP 1-0120022, Reactor Coolant System Leak Test, as soon as practical. _____ US

**6.32** If continued RCP operation is desired, Then MAINTAIN RCS pressure between 265 psia and the minimum RCS pressure for RCP operation as determined from 1-NOP-01.02, Appendix B. _____

**CAUTION**

Motor Stator Temperatures of the operating RCPs should be closely monitored as RCS temperature decreases. Stator temperature shall be maintained below 311°F.

**6.33** Continue to operate the RCPs to cool down the Steam Generators. _____

**6.34** When RCS temperature is less than 304°F, but greater than 281°F, Then place LTOP in service as follows:

**1.** Verify Annunciator H-15, PORV Low Range Condition Select Low, is in alarm. _____

**2.** Verify Annunciator H-21, Przr Relief Valve Anticipatory Alarm, is NOT in alarm. _____

- Each SDC suction line contains a full flow shutdown cooling relief valve, V3666 and V3667. Refer to Figure 2. These valves, with a lift setpoint of **350 psia** and 2300 gpm capacity each, are designed to protect the RCS against overpressurization during full safety injection flow following a spurious SIAS while on SDC. The SDCRVs (V3667 and V3666) are part of the Tech Spec RCS overpressurization system (3.4.9.3) and discharge to the containment sump.

- The SDC suction isolation valves have cross-tie capability. The unique feature of the Unit 2 SDC suction isolation valves is that the valve closest to the hot leg (V3480-"A" train, V3652-"B" train) is powered by the opposite train's power supply. The crosstie (V3545) is AB-powered. SDC suction valve power train assignments had to satisfy two competing requirements, assuming a single active failure (loss of power to one train of SDC):

  - Isolation of affected SDC train of SDC in the event of an intersystem LOCA.
  - Initiation of unaffected SDC train to commence a plant cooldown.

  To satisfy both requirements, a cross-tie had to be installed between the two trains which could be operated from either the "A" or "B" bus.

- Each SDC suction isolation will receive an open permissive signal to open at 276 psia as indicated on Pressurizer low range pressure instruments PT-1103 (V3652), PT-1104 (V3481), PT-1105 (V3480) and PT-1106 (V3651).

- Each SDC suction isolation will close on RCS pressure exceeding 500 psia as indicated on Pressurizer low range pressure instruments PT-1103 (V3652), PT-1104 (V3481), PT-1105 (V3480) and PT-1106 (V3651). Like the SITs, each valve is controlled by a separate pressure transmitter. Refer to the SDC Off Normal procedure.

In addition to the full flow SDC relief valves mentioned above, there are several other relief valves in the Unit 2 SDC system. Refer to Figure 2.

- V3483 and V3468; 350 psia and 155 gpm

- V3482 and V3469; 2500 psia and 5 gpm

- V3439 and V3507; 550 psia and 45 gpm

**[470 psia]** via low range pressure instruments and temperature interlocks. Refer to T.S. 3.4.13[3.4.9.3] for the temperature setpoints.

**UNIT 1 PORV Control**

NORMAL RANGE is selected any time RCS temperature and pressure are above 308°F $T_c$. (Tech Spec requires LTOP when < 304°F.)

Four redundant pressure transmitters, **PT-1102 A, B, C, & D**, provide input signals to the Reactor Protection System (RPS) comparator circuits. When any **two of the four** sense **≥2400 psia** pressure: (Refer to Figure 17.)

- The two corresponding RPS high Pressurizer pressure bistables trip generating a reactor trip and sending a signal to open the PORVs (if in NORMAL RANGE).

PORVs, V1402 and V1404, each have a NORMAL/ISOLATE switch in their Electrical Penetration Rooms. The switch alarms in the control room when in ISOLATE.

- V1402 NORMAL/ISOLATE switch removes power, causing the PORV to fail close.
- V1404 NORMAL/ISOLATE switch only removes control room inputs. This PORV has an additional OPEN/CLOSE switch at the HSCP which allows local valve control.

The LOW RANGE position activates a low temperature over pressure (LTOP) mitigation system that protects the RCS from pressures beyond the limit defined by the minimum pressurization temperature (MPT) curves of Technical Specifications, while the RCS is at low temperature, where brittle fracture may occur. The Unit 1 LTOP system has the following inputs:

- PC-1103 (V1402)
- PC-1104 (V1404)
- TE-1115 (V1402)
- TE-1125 (V1404)

RCS temperature is both a permissive and a setpoint adjust for PORV operation. Unit 1 has two low pressure setpoints of **350 psia** and **530 psia**. Refer to Tech. Spec. 3.4.13 for the temperature setpoints. An anticipatory alarm that warns the operator when actual RCS pressure rises to **within 20 psia** of the LTOP setpoint.

The PORVs are closed by de-energizing the DC solenoid, which equalizes main disc differential pressure, allowing spring force to close the valve.

The Unit 1 DC solenoid operates auxiliary contacts that energize indicating lamps (green for closed, red for open) on RTGB-103 above each PORV control switch.

> **CAUTION** - It is important to realize that this does not provide the Unit 1 PORVs with positive valve position indication. It only indicates whether or not the DC solenoid is energized. Refer to the Operating Experience Section of this text.

- Unit 1 positive PORV valve position indication is discussed in the section describing the acoustic monitoring system, which measures actual flow through the valve.

[Unit 2 has reed switches on the valve stem for positive position indication, which energize position indicating lamps (green for closed, red for open) on RTGB-203 above each PORV control switch].

On Unit 1, **TE-1106**, installed in the combined PORV relief line, indicates that one or both PORVs have lifted or are leaking, by actuating an alarm to warn of high tailpipe temperature. The detector also supplies an input to TIA-1106, on RTGB-103.

[Unit 2 has a temperature element located in each PORV discharge pipe: **TE-1110** for V1474; **TE-1106** for V1475. They supply independent temperature indicators on RTGB-203. Each temperature indicator inputs to a common alarm for high tailpipe temperature.]

## PORV Control Overview

- Each Unit 1 PORV has a three position, LOW RANGE/NORMAL RANGE/OVERRIDE, switch on RTGB-103. Refer to Figure 17,
- [Each Unit 2 PORV has a two position, LTOP/NORMAL, mode select switch and a three-position, OFF/OVERRIDE/TEST, switch on RTGB-203. Refer to Figure 18.]
- The NORMAL RANGE [NORMAL] position allows auto opening of the PORVs on 2/4 logic from RPS using the high Pressurizer pressure bistables (**2400 [2370] psia**).
- LOW RANGE [LTOP] position allows auto opening of the PORVs at **530 or 350 psia**

Written Examination
Question Worksheet

| Examination Outline Cross-reference: | Level | RO | SRO |
|---|---|---|---|
| | Tier # | 1 | |
| | Group # | 1 | |
| | K/A # | AA1.03 | |
| | Importance Rating | 3.6 | |

025 / Loss of Component Cooling Water / 8 Ability to operate and / or monitor the following as they apply to the Loss of Component Cooling Water: SWS as a backup to the CCWS.

Proposed Question: RO 8

A CCW leak has developed on Unit 2. Normal CCW Surge Tank makeup is not available. Which of the following describes backup makeup capability?

A. Auto makeup from Demin Water System

B. Manual makeup from Primary Water system

C. Auto makeup from the Domestic Water System

D. Manual makeup from Fire Water System

Proposed Answer: D

Explanation (Optional):

A. Normal makeup supply to surge tank
B. Correct method, incorrect source
C. Incorrect method, partially correct source (fire and domestic are essentially the same system)
D. Correct

Technical Reference(s): 2-0310030, 0711209 (Attach if not previously provided)

Proposed references to be provided to applicants during examination: none

Learning Objective: PSL OPS SYS 209 LPC-5 (As available)

Question Source: Bank # _____
Modified Bank # _____ (Note changes or attach parent)
New x

Question History: Last NRC Exam _____

Question Cognitive Level: Memory or Fundamental Knowledge x
Comprehension or Analysis _____

10 CFR Part 55 Content: 55.41 7
55.43 _____

Comments:

RO-8



**6.2** Subsequent Action (continued)

**NOTE**
CCW Surge Tank vent (RCV-14-1) diverts from atmosphere to the Chemical Drain Tank on high radioactivity in the CCW system.

**6.** If abnormal level conditions exist in the CCW surge tank, Then PERFORM the following:

**A.** High Level in the CCW Surge Tank.

**1.** CHECK the CCW Radiation Monitors (RM-26-1 and RM-26-2) for abnormal trends. If high radiation is indicated, REFER to ONOP 2-0310031, Component Cooling Water Excessive Activity.

**2.** CHECK the CCW Surge Tank Makeup Flow meter (FQ-14-14) for flow. If makeup flow is indicated, CLOSE V14100, Makeup Isol, and VERIFY V14101, Alternate Makeup Supply, is closed.

**3.** EVALUATE S/G Blowdown Sample Heat Exchangers as a source of in leakage.

/R35

**B.** Low Level in the CCW Surge Tank

**1.** CHECK the CCW Surge Tank Makeup Flow Meter (FQ-14-14) for flow:

**a.** If no flow is indicated:

**1.** VERIFY LCV-14-1, CCW Surge Tank Fill Valve, and V14100, Makeup Isol, are open.

**2.** VERIFY a Demin Water Pump is running.

**CAUTION**
Use the fire system as a makeup source only as a last resort.

**b.** If flow is indicated:

**1.** COMMENCE a visual search of the CCW System for evidence of leakage.

**2.** REFER to Appendix A to aid in the leak search.

**3.** ISOLATE the leak, if possible.

Deleted: 7
Deleted: 8
Deleted: 73
Deleted: 71
Deleted: 6970

# DETAILED DESCRIPTION

## CCW SURGE TANK

The CCW surge tank is connected to the suction of the CCW pumps and is designed to accommodate volumetric thermal changes in the system and to maintain NPSH at each pump suction. The tank is normally vented to atmosphere to prevent damage to the tank from both over-pressure and vacuum conditions. The cylindrical tank is horizontally mounted and has a volume of 2000 gallons. The surge tank is located east of the control room and north of the control room A/C units. Although both essential headers share the surge tank, a 30≅ high baffle divides the lower portion of the tank into two separate compartments; each associated with one of the essential headers. Each essential header is supplied from one compartment through separate surge lines.

Demineralized makeup water is added to the surge tank through an automatic level control system by the demineralized water system. A backup water supply is also available from the fire water system. (Refer to Figure 3 and Table1.)

- Air-operated valve LCV-14-1 is used to control makeup flow. Automatic makeup water is:

  - **added** when the surge tank level falls below **36"** as sensed by LS-14-3 (This setpoint is based on the requirement that the surge tank level be maintained for fluid contraction and expansion and to ensure that the pumps have the required NPSH)
  - **stopped** when surge tank level increases to **48"** as sensed by LS-14-4. (This setpoint is based on the requirement to maintain level below the top of the tank which is 66≅ from the tank bottom)

- Alarms associated with CCW surge tank levels are actuated at:

  - **High at 54"** as sensed by LS-14-5 (CCW SURGE TANK LEVEL HIGH) (This setpoint is set to alert the operator of a potential leakage of radioactive water into the CCW system OR a failure of the makeup system to terminate makeup flow)

Written Examination
Question Worksheet

| Examination Outline Cross-reference: | Level | RO | SRO |
|---|---|---|---|
| | Tier # | 1 | |
| | Group # | 1 | |
| | K/A # | AA2.04 | |
| | Importance Rating | 3.7 | |

027 / Pressurizer Pressure Control System Malfunction / 3 Ability to determine and interpret the following as they apply to the Pressurizer Pressure Control Malfunctions: Tech-Spec limits for RCS pressure.

Proposed Question: RO 9

Evaluate the following SELECTED controller malfunctions and determine which one would require entry into a Tech Spec LCO in the shortest period of time assuming no operator action and Unit 2 at 100% power.

SELECTED Pressurizer:

A. Pressure channel fails high.

B. Pressure channel fails low.

C. Level channel fails low.

D. Level channel fails high.

Proposed Answer: A

Explanation (Optional):

A. Correct (spray valves fail open, 2225 psia is DNB TS limit)
B. Would cause pressure to go high, TS limit of 2350 psia would take longer than 2225 psia
C. Would cause level to go high, TS limit of 67% would take longer than low pressure limit
D. Would cause level to go low, TS limit of 27% would take longer than low pressure limit

Technical Reference(s): _____ (Attach if not previously provided)

_____

Proposed references to be provided to applicants during examination: _____

Learning Objective: PSL OPS ADM LP 703-6 (As available)

| | | | |
|---|---|---|---|
| Question Source: | Bank # | | |
| | Modified Bank # | | (Note changes or attach parent) |
| | New | x | |
| Question History: | Last NRC Exam | | |
| Question Cognitive Level: | Memory or Fundamental Knowledge | | |
| | Comprehension or Analysis | x | |

Written Examination
Question Worksheet

10 CFR Part 55 Content: 55.45 13
55.43 5

Comments:

## REACTOR COOLANT SYSTEM

### 3/4.4.3 PRESSURIZER

### LIMITING CONDITION FOR OPERATION

3.4.3 The pressurizer shall be OPERABLE with a minimum water level of greater than or equal to 27% indicated level and a maximum water level of less than or equal to 68% indicated level and at least two groups of pressurizer heaters capable of being powered from 1E buses each having a nominal capacity of at least 150 kW.

**APPLICABILITY:** MODES 1, 2 and 3.

**ACTION:**

a. With one group of the above required pressurizer heaters inoperable, restore at least two groups to OPERABLE status within 72 hours or be in at least HOT STANDBY within the next 6 hours and in HOT SHUTDOWN within the following 6 hours.

b. With the pressurizer otherwise inoperable, be in at least HOT STANDBY with the reactor trip breakers open within 6 hours and in HOT SHUTDOWN within the following 6 hours.

### SURVEILLANCE REQUIREMENTS

4.4.3.1 The pressurizer water volume shall be determined to be within its limits at least once per 12 hours.

4.4.3.2 The capacity of each of the above required groups of pressurizer heaters shall be verified to be at least 150 kW at least once per 92 days.

4.4.3.3 The emergency power supply for the pressurizer heaters shall be demonstrated OPERABLE at least once per 18 months by verifying that on an Engineered Safety Features Actuation test signal concurrent with a loss of offsite power:

a. the pressurizer heaters are automatically shed from the emergency power sources, and

b. the pressurizer heaters can be reconnected to their respective buses manually from the control room after resetting of the ESFAS test signal.

## POWER DISTRIBUTION LIMITS

## DNB PARAMETERS

### LIMITING CONDITION FOR OPERATION

3.2.5 The following DNB-related parameters shall be maintained within the limits shown on Table 3.2-2:

a. Cold Leg Temperature

b. Pressurizer Pressure

c. Reactor Coolant System Total Flow Rate

d. AXIAL SHAPE INDEX

**APPLICABILITY**: MODE 1.

**ACTION**:

With any of the above parameters exceeding its limit, restore the parameter to within its limit within 2 hours or reduce THERMAL POWER to ≤ 5% of RATED THERMAL POWER within the next 4 hours.

### SURVEILLANCE REQUIREMENTS

4.2.5.1 Each of the parameters of Table 3.2-2 shall be verified to be within their limits by instrument readout at least once per 12 hours.

4.2.5.2 The Reactor Coolant System total flow rate shall be determined to be within its limit by measurement* at least once per 18 months.

---

* Not required to be performed until THERMAL POWER is ≥ 80% of RATED THERMAL POWER.

Table 3.2-2

DNB MARGIN LIMITS

| PARAMETER | FOUR REACTOR COOLANT PUMPS OPERATING |
|---|---|
| Cold Leg Temperature (narrow Range) | $535^0$F** $\leq$ T $\leq$ $549^0$F |
| Pressurizer Pressure* | 2225 psia $\leq$ $P_{PZR}$ $\leq$ 2350 psia** |
| Reactor Coolant Flow Rate | $\geq$ 335,000 gpm |
| AXIAL SHAPE INDEX | Within the limits specified in Figure 3.2-4 |

* Limit not applicable during either a THERMAL POWER ramp increase in excess of 5% of RATED THERMAL POWER or a THERMAL POWER step increase of greater than 10% of RATED THERMAL POWER.

** Applicable only if power level $\geq$ 70% of RATED THERMAL POWER.

Written Examination
Question Worksheet

| Examination Outline Cross-reference: | Level | RO | SRO |
|---|---|---|---|
| | Tier # | 1 | |
| | Group # | 1 | |
| | K/A # | EK3.01 | |
| | Importance Rating | 4.1 | |

038 / Steam Generator Tube Rupture / 3 Knowledge of the reasons for the following responses as the apply to the SGTR: Equalizing pressure on primary and secondary sides of ruptured S/G.

Proposed Question: RO 10

A Steam Generator Tube Rupture / LOOP has occurred on Unit 2 and 2-EOP-04 is in progress. 2-EOP-99, Appendix R has been performed. The current RCS / S/G parameters are:

- RCS pressure 820 psia.
- RCS temperature 509$^0$F Thot
- Isolated S/G pressure 730 psia
- Isolated S/G level 42% Narrow Range

Which one of the following is the strategy / reason concerning pressure control of the RCS?

Maintain RCS pressure:

A. lower than isolated S/G pressure to maintain affected S/G level 60% to 70% NR.

B. higher than the isolated S/G pressure to prevent a potential reactivity event.

C. lower than the isolated S/G to prevent further contamination of the S/G.

D. higher than the isolated S/G to prevent loss of subcooling.

Proposed Answer: B

Explanation (Optional):

A. 60 to 70% NR is the correct strategy for the unisolated S/G.
B. Correct (could cause dilution event)
C. Would cause greater contamination to S/G, not addressed in EOP-04
D. Subcooling would be lost if RCS temperature stayed the same and pressure was reduced in this case, cooldown and depressurization are required.

Technical Reference(s): 2-EOP-04 (Attach if not previously provided)

Proposed references to be provided to applicants during examination: _____

Learning Objective: 0702825-12 (As available)

Question Source: Bank # _____

Written Examination
Question Worksheet

| | | | |
|---|---|---|---|
| | Modified Bank # | | (Note changes or attach parent) |
| | New | x | |
| Question History: | Last NRC Exam | | |
| Question Cognitive Level: | Memory or Fundamental Knowledge | | |
| | Comprehension or Analysis | x | |
| 10 CFR Part 55 Content: | 55.41 | 5, 10 | |
| | 55.43 | | |

Comments:

RO-10



**4.0 OPERATOR ACTIONS** (continued)

| INSTRUCTIONS | CONTINGENCY ACTIONS |
|---|---|
| ☐ **29. Disable RCPs in the ISOLATED S/G loop**<br><br>If **ALL** RCPs have been STOPPED, Then DISABLE **BOTH** RCPs associated with the **ISOLATED** S/G:<br><br>**A.** PLACE the associated Oil Lift Pump control switch in OFF.<br><br>**B.** REMOVE the CLOSE fuses for the associated RCP breakers. | |

**CAUTION**

Backflow to the RCS can reduce the RCS boron concentration. It is highly desirable to minimize backflow while in Natural Circulation. The exception to this is the need to allow backflow solely as a means of preventing S/G level from exceeding the indicating range.

Steaming the isolated S/G to atmosphere should only be performed as a last resort.

| | |
|---|---|
| * **30. Maintain ISOLATED S/G Level less than 90% NR**<br><br>MAINTAIN the **ISOLATED** S/G level less than 90% NR by **ANY** of the following methods:<br><br>• Lowering RCS pressure to below isolated S/G pressure (back flow is the MOST preferred method)<br><br>• Blowing down the isolated S/G to the MST<br><br>• Steaming the isolated S/G to the condenser<br><br>• Steaming the isolated S/G to atmosphere (steaming to atmosphere is the LEAST preferred method) | |

**4.0 OPERATOR ACTIONS** (continued)

| INSTRUCTIONS | CONTINGENCY ACTIONS |
| --- | --- |
| * **24. Maintain the UNISOLATED S/G Level 60 to 70% NR**<br><br>ENSURE the **UNISOLATED** S/G has level being restored to or maintained between 60 and 70% NR. | |
| * **25. Evaluate Condensate Inventory**<br><br>ENSURE the condensate inventory is greater than the minimum required.<br>**REFER TO** Data Sheet 1, Determination of Condensate Required to Remove Decay Heat and RCP Heat. | |
| * **26. Borate the RCS for SDM**<br><br>BORATE the RCS until SDM is greater than the value required by the COLR.<br>**REFER TO** 2-NOP-02.24, Boron Concentration Control. | |

**4.0 OPERATOR ACTIONS** (continued)

| INSTRUCTIONS | CONTINGENCY ACTIONS |
| --- | --- |
| * **9. Verify RCP Operating Limits**<br><br>If RCPs are RUNNING,<br>Then VERIFY RCP operating limits are satisfied.<br>**REFER TO** Table 13, RCP Operating Limits. | **9.1** STOP RCPs that do NOT satisfy operating limits. |

**CAUTION**

Operation of the 2C AFW Pump should be avoided to minimize direct releases to the environment. If motor driven AFW pumps are NOT available, steam from the least affected S/G should be used.

| | |
| --- | --- |
| ☐ **10. RCS Cooldown to less than 510°F**<br><br>Cooldown the RCS to $T_{HOT}$ less than 510°F using SBCS. | **10.1** COOLDOWN the RCS to $T_{HOT}$ less than 510°F using ADVs from **BOTH** S/Gs.<br><br>**10.2** COOLDOWN using 2C AFW Pump and alternate steaming flow paths on the unisolated S/G.<br>**REFER TO** Table 12, Alternate S/G Heat Removal Paths. |

**4.0 OPERATOR ACTIONS** (continued)

| INSTRUCTIONS | CONTINGENCY ACTIONS |
| --- | --- |

**NOTE**

RCP operation is desirable while depressurizing the RCS during a SGTR event.

- RCP operation takes precedence over equalizing primary and secondary pressures.
- Monitor RCPs for cavitation as the NPSH curve is approached and exceeded.
- Maintain minimum subcooling within the limits of Figure 1A.

| INSTRUCTIONS | CONTINGENCY ACTIONS |
| --- | --- |
| * **11. Depressurize the RCS**<br><br>PERFORM a controlled RCS depressurization as follows:<br><br>**A.** MAINTAIN RCS pressure within **ALL** the following criteria (listed in order of priority):<br><br>• Within the limits of Figure 1A, RCS Pressure Temperature<br>• Less than 930 psia<br>• Above the minimum pressure for RCP operation<br>• Approximately equal to the most affected S/G pressure (within 50 psia)<br><br>**B.** OPERATE Main or Auxiliary Pressurizer spray.<br><br>**C.** If HPSI throttle criteria are met, Then THROTTLE SI flow. **REFER TO** Appendix S, Safety Injection Throttling and Restoration. | **11.1** If RCS pressure can NOT be LOWERED and MAINTAINED within the specified criteria, Then OPERATE the PORVs or RCGVS to reduce pressure. |

Written Examination
Question Worksheet

| Examination Outline Cross-reference: | Level | RO | SRO |
|---|---|---|---|
| | Tier # | 1 | |
| | Group # | 1 | |
| | K/A # | EA1.03 | |
| | Importance Rating | 3.4 | |

CE/EO5 / Excess Steam Demand / 4 Ability to operate and / or monitor the following as they apply to the (Excess Steam Demand): Desired operating results during abnormal and emergency situations.

Proposed Question: RO 11

The following temperatures exist after an Excess Steam Demand event in which the 2B S/G has blown dry:

- Loop 2A T-cold: 432°F
- Loop 2A T-hot: 464°F
- Loop 2B T-cold: 424°F
- Loop 2B T-hot: 456°F

The US has directed the RCO to stabilize RCS pressure and temperature. Which one of the following pressures should the 2A Atmospheric Steam Dump controller setpoint be adjusted to in order to stabilize temperature with the MINIMUM amount of RCS heatup?

A. 322 psia

B. 351 psia

C. 449 psia

D. 486 psia

.

Proposed Answer: A

Explanation (Optional):

A. Correct (lowest T-cold would lessen heatup)
B. Corresponds to the T-cold of the unaffected generator
C. Corresponds to the T-hot of the affected generator
D. Corresponds to the T-hot of the unaffected generator

Technical Reference(s): 0702826 (Attach if not previously provided)

Proposed references to be provided to applicants during examination: Steam Tables

Learning Objective: 0702826-09 (As available)

Question Source: Bank # 1068

Modified Bank # _____ (Note changes or attach parent)

New _____

Written Examination
Question Worksheet

| | | |
|---|---|---|
| Question History: | Last NRC Exam | _____ |
| Question Cognitive Level: | Memory or Fundamental Knowledge | _____ |
| | Comprehension or Analysis | x |
| 10 CFR Part 55 Content: | 55.41 | 7,14 |
| | 55.43 | _____ |

Comments: added “least amount of RCS heatup” to strengthen correct answer.

SGs. If the cause of an ESDE is isolated, either automatically or manually, the ESDE is essentially over. If closing the main steam and feedwater header valves does not isolate the excessive energy demand, then control of the affected SG will be lost, all feedwater to the SG must be isolated, and the SG allowed to boil dry. In either case, it is important to establish a controlled heat removal capability via the unaffected SG early in the event to stabilize RCS temperatures following initial cooldown. Failure to achieve acceptable conditions for this Safety Function in a timely manner could complicate the event due to the effects that subsequent, uncontrolled heatup would have on RCS inventory and pressure control. Adequate heat removal can be established using atmospheric dump valves (ADV) with forced or natural circulation in the RCS.

- If an ESDE occurs inside the Reactor Containment Building (RCB), the steam flow (energy input) will cause containment temperature, pressure, and relative humidity to increase. Saturated steam at SG conditions becomes superheated in terms of the lower RCB pressure and the increase of RCB parameters (total pressure of mixed steam and air environment) is directly related to this amount of superheat. Acceptable conditions of containment isolation and containment temperature and pressure control safety functions should be achieved by the containment isolation actuation signal (CIAS) and containment spray actuation signal (CSAS), depending upon the amount of RCB pressure increase. Radiation levels inside and outside Containment should not be affected unless a SG tube leak exists in conjunction with ESDE.

  When containment spray is actuated, the potential exists for hydrogen generation from a chemical reaction between boric acid (from the spray system) and certain metals such as zinc and aluminum. This reaction would produce hydrogen at a rate that increases with RCB temperature and thereby affect the containment combustible gas control safety function. Hydrogen generated can be removed by the hydrogen recombiners and/or the Hydrogen Purge System.

## FACTORS AFFECTING ESDE SEVERITY

The severity of an excess steam demand will depend upon the magnitude of demand, location of the failure, and initial plant conditions at the time the event is initiated.

- The size of the pressure boundary failure will determine the rate of increased heat removal by the Secondary system and will directly affect the rate-of-change of both

**4.0 OPERATOR ACTIONS** (continued)

| INSTRUCTIONS | CONTINGENCY ACTIONS |
| --- | --- |
| ☐ **14. Verify Correct S/G was Isolated**<br><br>VERIFY the **MOST** affected S/G is isolated by observing **ALL** of the following:<br><br>• S/G pressures<br>• S/G levels<br>• RCS cold leg temperatures | **14.1** If the wrong S/G was isolated, Then RESTORE feeding and steaming capability to the isolated S/G.<br><br>**14.2** When RCS heat removal has been re-established on the least affected S/G, Then ISOLATE the most affected S/G. **REFER TO** Appendix R, Steam Generator Isolation. |
| [*] **15. Stabilize RCS Temperature**<br><br>**A.** STEAM the **LEAST** affected S/G using the ADV.<br><br>**B.** CONTROL feedwater to the **LEAST** affected S/G.<br><br>**C.** ENSURE the RCS is within the limits of Figure 1A or 1B, RCS Pressure Temperature. | **A.1** STEAM using 2C AFW Pump and alternate steaming flowpaths. **REFER TO** Table 12, Alternate S/G Heat Removal Paths. |

**(Continued on Next Page)**

# Single Question Report

| | | | | |
|---|---|---|---|---|
| **QID#:** 1068 | **Objective:** 0702826-09 | | **System:** EOP-05 | |
| **Rev:** 0 | **Cog Level:** 1 | **KA #** | **RO** 0.5 | **SRO** 0.5 |

The following temperatures exist after an ESD event in which the B S/G has blown dry:

- Loop 2A T-cold: 432°F
- Loop 2A T-hot: 464°F
- Loop 2B T-cold: 424°F
- Loop 2B T-hot: 456°F

The US has directed the RCO to stabilize RCS pressure and temperature. In order to stabilize RCS temperature, to what approximate pressure should the RCO adjust 2A, ADV setpoint?

A. 322 psia

B. 351 psia

C. 449 psia

D. 486 psia

**Reasons the choices are right or wrong.** **Correct answer is A.**

A.

B.

C.

D.

**Source Ref:**

**Open Ref:** Steam Tables

**Revision Notes:**

## Question Use History

IPT 3 Exam, 0720228, 12/11/03

Written Examination
Question Worksheet

| Examination Outline Cross-reference: | Level | RO | SRO |
|---|---|---|---|
| | Tier # | 1 | |
| | Group # | 1 | |
| | K/A # | EA2.1 | |
| | Importance Rating | 2.8 | |

CE/EO6 / Loss of Feedwater / 4 Ability to determine and interpret the following as they apply to the (Loss of Feedwater): Facility conditions and selection of appropriate procedures during abnormal and emergency operations.

Proposed Question: RO 12

Given the following:

- A total loss of feedwater has occurred on Unit 2.
- All efforts to restore feedwater have been unsuccessful.
- Both S/Gs are <15% WR.

Which one of the following describes the appropriate sequence of procedural selection for this condition?

A. Exit EOP-06; enter EOP-15, after performing Operator Initial Actions in EOP-15, establish once through cooling, RCS and Core Heat Removal, success path 3.

B. Continue efforts to restore feedwater in EOP-06 AND establish once through cooling IAW EOP-15, RCS and Core Heat Removal, concurrently with EOP-06.

C. Establish once through cooling IAW EOP-15 RCS and Core Heat Removal, success path 3, then, exit EOP-06 to EOP-15.

D. Enter EOP-15, establish once through cooling IAW RCS and Core Heat Removal, success path 3. Assess remainder of Safety Functions in EOP-15, then exit EOP-06.

.

Proposed Answer: C

Explanation (Optional):

A. Exiting EOP-06 and entering EOP-15 is correct, performing initial operator actions prior to HR-3 is incorrect.
B. Remaining in EOP-06 concurrently with EOP-15 HR-3 is incorrect
C. Correct (direct entry to HR-3)
D. Direct entry to HR-3 is correct, assessing SF's in EOP-15 then exit EOP-06 is not correct.

Technical Reference(s): 2-EOP-06, 2-EOP-15 (Attach if not previously provided)

Proposed references to be provided to applicants during examination: _____

Written Examination
Question Worksheet

| | | | |
|---|---|---|---|
| Learning Objective: | 0702827-07, 0702828-07 | | (As available) |
| Question Source: | Bank # | | |
| | Modified Bank # | | (Note changes or attach parent) |
| | New | x | |
| Question History: | Last NRC Exam | | |
| Question Cognitive Level: | Memory or Fundamental Knowledge | x | |
| | Comprehension or Analysis | | |
| 10 CFR Part 55 Content: | 55.41 | 10 | |
| | 55.43 | | |

Comments:

RO·12



**4.0 OPERATOR ACTIONS** (continued)

| INSTRUCTIONS | CONTINGENCY ACTIONS |
|---|---|
| * **11. Verify RCS Heat Removal**<br><br>VERIFY adequate RCS heat removal with at least **ONE** S/G by observing **BOTH** of the following:<br><br>• At least **ONE** S/G has a level of at least 15% WR<br><br>• RCS $T_{COLD}$ is stable or lowering | **11.1** If **EITHER** of the following conditions exist,<br><br>• **BOTH** S/G levels are less than 15% WR<br><br>• An uncontrolled rise in RCS $T_{COLD}$ of 5°F or greater<br><br>Then PERFORM **BOTH** of the following:<br><br>**A.** ESTABLISH once through cooling.<br>**REFER TO** 2-EOP-15, RCS and Core Heat Removal, Success Path 3: Once-Through-Cooling.<br><br>**B.** **EXIT this procedure and GO TO 2-EOP-15, Functional Recovery.** |
| * **12. Maintain S/G Level 60 to 70% NR**<br><br>When feedwater is restored, Then PERFORM the following to restore level in at least **ONE** S/G.<br><br>**A.** LIMIT initial feedwater flow rate to approximately 150 gpm.<br><br>**B.** When **EITHER** of the following conditions exist,<br><br>• Feed flow has been supplied for 5 minutes<br><br>• S/G water level has risen<br><br>Then CONTROL feedwater flow rate to restore and maintain S/G level 60 to 70% NR. | |

### 3.4.6 **If Both S/G Levels are Less than 15% WR or if Tcold Increases (Uncontrollably) 5°F or Greater, then Implement the Functional Recovery Procedure and Initiate Once-Through Cooling**.

For the total Loss of Feedwater event, as long as at least one steam generator has a wide range level of at least 15%, the adequate RCS heat removal is implicitly being maintained. This level is based on ensuring that once-through cooling is initiated prior to steam generator dryout. If once-through cooling is initiated after SG heat removal capability is lost, and feedwater is not regained, core damage will occur because RCS pressure will remain above HPSI pump shutoff head for too long a period of time. At least one SG having at least 15% of wide range level is required. This value is based on a wide range level uncertainty of ±10% plus a 5% margin to ensure that come SG inventory exists. An additional criterion requires the operator to monitor RCS Tc to ensure temperatures are stable or decreasing. This criterion assumes that no operator or plant initiated actions have caused a momentary, correctable reduction in RCS heat removal (e.g., ADV is closed automatically or manually).

If both S/G levels are less than 15% WR or if RCS increases (uncontrollably) 5°F or greater, then the operator is instructed to implement the Functional Recovery Guideline and to initiate once-through cooling. In this case, initiation of once-through cooling is conducted concurrently with implementing the functional recovery procedure.

## 3.5 **Supplementary Information**

1. The operators should not add feedwater to a dry steam generator if another steam generator still contains water. Re-establish feedwater only to the steam generator that is not dry. If both steam generators become dry, refill only one steam generator to reinitiate core cooling.

2. During all phases of a plant cooldown, monitor RCS temperature and pressure to avoid exceeding a cooldown rate greater than Technical

Written Examination
Question Worksheet

| Examination Outline Cross-reference: | Level | RO | SRO |
|---|---|---|---|
| | Tier # | 1 | |
| | Group # | 1 | |
| | K/A # | EK1.01 | |
| | Importance Rating | 3.3 | |

000055 / Station Blackout / 6Knowledge of the operational implications of the following concepts as they apply to the Station Blackout: Effect of battery discharge rates on capacity.

Proposed Question: RO 13

Given the following:

- Unit 2 tripped from 100% power and is in a Station Blackout.
- All 125VDC busses are being supplied by their respective batteries.
- Operators are de-energizing loads to conserve battery capacity.

Which one of the following loads would have the LARGEST battery drain if left energized for the specified time?

| EQUIPMENT | AMPS | TIME ENERGIZED (minutes) |
|---|---|---|
| A. 120V Vital SUPS | 15 | 70 |
| B. Air Side Seal Oil Pump | 40 | 25 |
| C. Emergency Oil Pump | 55 | 18 |
| D. 2A SAS SUPS | 19 | 55 |

Proposed Answer: A

Explanation (Optional):

A. Correct (17.5 A/hr)
B. 16.7 A/hr
C. 16.5 A/hr
D. 17.4 A/hr

Technical Reference(s): 0711161 (Attach if not previously provided)

Proposed references to be provided to applicants during examination: _____

Learning Objective: 0702161-2A (As available)

Question Source: Bank # _____

Modified Bank # _____ (Note changes or attach parent)

New x

Written Examination
Question Worksheet

| | | | |
|---|---|---|---|
| Question History: | Last NRC Exam | | |
| Question Cognitive Level: | Memory or Fundamental Knowledge | | |
| | Comprehension or Analysis | | x |
| 10 CFR Part 55 Content: | 55.41 | 8 | |
| | 55.43 | | |

Comments:

**ST.LUCIE PLANT**
**LESSON PLAN**
**0702161 Revision 2**

Approved by: _____
(Training Supervisor)

Date: _____

**PROGRAM:** Reactor Operator Plant Specific

**LESSON TITLE:** Electrical Science, Chapter 1
Station Batteries

**SETTING:** Classroom

**TIME:** Variable **CLASS SIZE:** Variable

**INSTRUCTIONAL MATERIALS:**

•Student Handout and Text
•Overhead Transparencies

**TOOLS AND EQUIPMENT:**

•Overhead Projector

**REFERENCES:**

**TERMINAL OBJECTIVE:**

Upon completion of the Plant Specific Electrical Science block of instruction, you will be able to apply basic circuit analysis techniques involving single phase and three phase power systems.

**ENABLING OBJECTIVES:**

Upon completion of this chapter, you will be able to:

1.Explain the principle of operation of a cell.

2.Explain the meaning of the following terms concerning batteries:

a.Electrolytef.Amp-hour Capacity Rating
b.Electrodesg.Battery Load Profile
c.Primary Cellh.Float Voltage
d.Secondary Celli.Equalizing Voltage
e.Polarizationj.Specific Gravity

3.Explain the basic principle of operation of a lead-acid battery.

**ENABLING OBJECTIVES**: (continued)

4. Perform from memory, calculations relating emf, battery internal resistance, and current.

5. Solve for one or more unknown in a word problem relating a combination of the following parameters:

a. Total Battery Output (volts DC)
b. Battery Capacity (amp-hr)
c. Volt Rating Per Cell
d. Number of Cells
e. Discharge Rate (amp)

6. State the reason for the ventilation requirements of battery spaces.

7. State the precautions associated with recharging a lead-acid battery.

8. State the concern associated with leaving a battery in a partially discharged condition.

9. State the significance of periodically monitoring the specific gravity of batteries in the 125 DC power distribution system at PSL.

| OUTLINE OF INSTRUCTION | INSTRUCTOR ACTIVITIES | NOTES AND STUDENT ACTIVITIES |
|---|---|---|
| **I.INTRODUCTION** | | |
| A.Introduce Self | Write name on board | |
| B.Lesson Overview | State Objectives | |
| 1.Terminal Objective | Explain | |
| 2.Enabling Objectives | | |
| 3.General Sequence | | |
| **II.INSTRUCTIONAL PRESENTATION** | | |
| A.Reason for Having Station Batteries | "Last Chance" electrical source for powering essential services when both the main generator and offsite power are unavailable. | |
| | Batteries supply emergency power for circuit breaker control, emergency lube oil pump for turbine bearings, instrumentation, inverters, annunciators, protective relaying and various other equipment. | |
| | Typical DC system consists of battery, chargers, and distribution system. | Figure 1-0 |
| | Batteries at PSL are 60 cell, 2400 A·h capacity rating at a nominal voltage of 125 volts. | |

| OUTLINE OF INSTRUCTION | INSTRUCTOR ACTIVITIES | NOTES AND STUDENT ACTIVITIES |
|---|---|---|
| II.B. Direct-Current Production Using Chemical Cells | Chemical energy to electrical energy accomplished by electrochemical cells. Cell is composed of two dissimilar metals immersed in conductive liquid or paste called electrolyte. | |
| | Chemical cells classified as either primary or secondary cells. | |
| | Primary cells not reusable, secondary cells can be recharged and used again. | |
| | Two or more cells connected in series is called a battery. | |
| C. The Cell | Device that transforms chemical energy into electrical energy | |
| | Simplest cell known is galvanic or voltaic, consists of carbon and zinc electrodes suspended in jar of sulfuric acid and water solution called the electrolyte. Cell is fundamental unit of a battery. | Figure 1-1 |

| OUTLINE OF INSTRUCTION | INSTRUCTOR ACTIVITIES | NOTES AND STUDENT ACTIVITIES |
|---|---|---|
| D. Primary and Secondary Cells | In a primary cell, one electrode eaten away due to chemical action. Primary cells are disposable.<br><br>Secondary cells are reactivated by the charging process - forcing electric current through them in the opposite direction. Common types are lead-acid, nickel-iron, and nickel-cadmium. | |

| OUTLINE OF INSTRUCTION | INSTRUCTOR ACTIVITIES | NOTES AND STUDENT ACTIVITIES |
|---|---|---|
| II.E. Lead-Acid Cell | Widely used electrodes are lead and lead peroxide. Electrolyte is sulfuric acid and water solution. $H_2O$ - 65%. $H_2SO_4$ - 35%.<br><br>As cell discharges, $H_2SO_4$ ionizes to four $H^+$ ions and two negative sulfate $SO_4^-$ ions. Negative charge is developed on lead plate when and $SO_4^-$ ion combines with lead to form lead sulfate $PbSO_4$. Positive $H^+$ ions combine with electrons of lead-peroxide plate and become neutral hydrogen atoms. They next combine with oxygen of this plate to form water $H_2O$. The $PbO_2$ plate becomes positively charged. A fully charged lead-acid cell has a terminal voltage of 2.2 volts.<br><br>Discharged cell may be recharged by reversing the chemical process. | Figure 1-2 |
| F. Cell Polarization | Hydrogen bubbles form on the surface of the anode caused by chemical discharge action. Some hydrogen bubbles rise to surface of anode and escape to air.<br><br>Too many bubbles form barrier on anode and increase internal resistance which decreases terminal voltage and output current. Heavily polarized cells have no useful output. | |

| OUTLINE OF INSTRUCTION | INSTRUCTOR ACTIVITIES | NOTES AND STUDENT ACTIVITIES |
|---|---|---|
| II.F.(continued) | Several methods used to prevent polarization.<br><br>1.Vent on container surface to allow hydrogen to escape into air but results in lower electrolyte level since $H_2$ not present to reform into $H_2O$ when recharged. Water must be added to battery-like car battery.<br><br>2.A second method uses an oxygen rich material to recombine with the hydrogen.<br><br>3.A third method is to use a hydrogen absorbing material such a calcium which then releases the hydrogen during charging process. | |
| G.<u>Cell Terminal Voltage</u> | Terminal voltage falls off as cell discharges. End or final voltage usually given by manufacturer - should not be exceeded. Usually around 1.75 volts per cell for lead-acid cells. | Figure 1-3 |

| OUTLINE OF INSTRUCTION | INSTRUCTOR ACTIVITIES | NOTES AND STUDENT ACTIVITIES |
|---|---|---|
| II.H.Cell Capacity | Cell capacity is the amount of electrical charge a cell can deliver before its terminal voltage falls to the end voltage.<br><br>Capacity units are ampere-hours or coulombs (1A·h = 3,600C). The discharge period must be specified since to heavy a discharge current can cause severe polarization.<br><br>**EXAMPLE**: PSL's station batteries are rated at 2,400 A·h for a period of 8 hours therefore, they can deliver a current of 300 amperes for a period of 8 hours. | |
| I.Cell Internal Resistance | Cell internal resistance is a function of cross sectional area of cell, length of current path, type of materials used, and operating temperature.<br><br>Figure 1-4 illustrates terminal voltage of a practical battery considering internal resistance voltage drop. | Figure 1-4 |
| J.Station Batteries | PSL station batteries are lead-calcium secondary batteries. The calcium is added to the lead plates to make a lead-calcium alloy. The calcium strengthens the lead plate and has a longer life expectancy than some other alloys. Also, hydrogen generation is less. | |

| OUTLINE OF INSTRUCTION | INSTRUCTOR ACTIVITIES | NOTES AND STUDENT ACTIVITIES |
|---|---|---|
| II.K. Battery Duty Cycle | Load current -vs- time demand on the battery. Load profiles are provided for both units in the text. | |
| L. Hydrogen Generation | Hydrogen and oxygen are generated during the charging process as a result of the dissociation of water. $H_2$ generation increases with charging time and reaches maximum when battery is fully charged. .016ft³/hr of $H_2$ for every one amp of charging current with a fully charged battery. Ventilation a must. | |
| M. Float Voltage | Voltage necessary to maintain cells in their fully charged condition. For lead calcium 2.17 to 2.25V/cell. | |
| N. Equalizing Charge and Charging | Only difference between charging voltage and equalizing voltage is length of time applied. Equalizing charge is used to insure all cells charge up to a specified minimum voltage. | |

| OUTLINE OF INSTRUCTION | INSTRUCTOR ACTIVITIES | NOTES AND STUDENT ACTIVITIES |
|---|---|---|
| II.O.Measurement of Specific Gravity | Specific gravity of electrolyte is good indication of charge state of cell. PSL cells are approximately 1.215 for fully charged cells.<br><br>Specific gravity values are calculated as the ratio of the weight of the electrolyte to the weight of an equal volume of distilled water. In the case of lead-acid batteries, it is the ratio of the weight of a solution of sulfuric acid and water to the weight of an equal volume of distilled water. | |
| **III.EVALUATION** | | |
| A.Student | | |
| (Quiz, PBT, etc.) | | |
| B.Feedback | | |

**TABLE 9**

**125V DC EQUIPMENT WHICH MAY BE DE-ENERGIZED TO EXTEND BATTERY LIFE**

(Page 1 of 2)

**SECTION 1: RAB ELECTRICAL EQUIPMENT ROOM (43' ELEVATION)**

| BKR. | CKT. | EQUIPMENT |
|---|---|---|
| **125 VDC BUS 1A** | | |
| 1-60103 | 3 | 480V Swgr 1A1 |
| 1-60104 | 4 | 6.9 KV Swgr 1A1 |
| 1-60109 | 9 | Rx Trip Swgr (TCB 1 & 5) |
| 1-60110 | 10 | Auxiliary Transformer 1A |
| 1-60111 | 11 | Rx Trip Swgr (TCB 3 & 7) |
| 1-60114 | 14 | Main Transformer 1A |
| **125 VDC BUS 1B** | | |
| 1-60204 | 4 | 6.9 KV Swgr 1B1 |
| 1-60207 | 7 | 480V Swgr 1B1 |
| 1-60210 | 10 | Auxiliary Transformer 1B |
| 1-60214 | 14 | Main Transformer 1B |
| 1-60220 | 20 | Rx Trip Swgr (TCB 2, 6, & 9) |
| 1-60222 | 22 | Rx Trip Swgr (TCB 4 & 8) |
| **125 VDC BUS 1AB** | | |
| 1-60304 | 4 | 4.16 KV Swgr Test Stand |
| 1-60305 | 5 | 6.9 KV Swgr Test Stand |
| 1-60307 | 7 | 4.16 KV Swgr Test Stand |
| 1-60309 | 9 | 4.16 KV Swgr Test Stand |
| **125 VDC POWER PANEL 118 (DC BUS 1A BKR. 60124)** | | |
| 1-60503 | 3 | Waste Management Ann. W |

**End of Section 1**

**TABLE 9**
**125V DC EQUIPMENT WHICH MAY BE DE-ENERGIZED TO EXTEND BATTERY LIFE**
(Page 2 of 2)

**SECTION 2: TURBINE BLDG SWGR ROOM (19.5' ELEVATION)**

| BKR. | CKT. | EQUIPMENT |
|---|---|---|
| **125 VDC POWER PANEL 119 (DC BUS 1B BKR. 60223)** | | |
| 1-60605 | 5 | LP Htr 3A, 3B, and 4A, 4B (NRV's) |
| 1-60607 | 7 | HP Htr 5A (NRV) |
| 1-60610 | 10 | HP Htr 5B (NRV) |
| **125 VDC BUS 1C** | | |
| 1-60704 | 4 | Gen Field Bkr. (Normal) |
| 1-60706 | 6 | PP-133, 125 VDC |
| 1-60711 | 11 | Emer Oil Pump |
| 1-60712 | 12 | Load Test Breaker |
| **125 VDC BUS 1D** | | |
| 1-60902 | 2 | Condensate Polisher Bypass Vlv |
| 1-60904 | 4 | Gen Field Bkr. (Emergency) |
| 1-60913 | 13 | Load Bank (1000A) |

**End of Section 2**

**END OF TABLE 9**

Written Examination
Question Worksheet

| Examination Outline Cross-reference: | Level | RO | SRO |
|---|---|---|---|
| | Tier # | 1 | |
| | Group # | 1 | |
| | K/A # | 2.1.28 | |
| | Importance Rating | 4.1 | |

056 / Loss of Offsite Power / 6 Conduct of Operations / Knowledge of the purpose and function of major system components and controls.

Proposed Question: RO 14

The following conditions exist:

- Unit 2 tripped from 100% power due to a LOOP
- The 2A Emergency Diesel Generator tripped on overspeed
- SPTAs are complete

For the ADV's, what operation is available from the Plant Auxiliary Control Board (PACB)?

2A atmospheric steam dump in:

A. Auto/Manual, 2B atmospheric steam dump in Auto/Manual.

B. Manual/Manual, 2B atmospheric steam dump in Auto/Auto.

C. Auto/Auto, 2B atmospheric steam dump in Manual/Manual.

D. Auto/Manual, 2B atmospheric steam dump in Auto/Auto.

Proposed Answer: C

Explanation (Optional):

A. 2A ADV correct, 2B ADV incorrect
B. 2A ADV correct, 2B ADV incorrect
C. Correct (PACB power supplies are reversed)
D. 2A ADV correct, 2B ADV incorrect

Technical Reference(s): 0711304 (Attach if not previously provided)

Proposed references to be provided to applicants during examination: _____

Learning Objective: 0702304-7 (As available)

Question Source: Bank # _____

Modified Bank # _____ (Note changes or attach parent)

New x

Question History: Last NRC Exam _____

Question Cognitive Level: Memory or Fundamental Knowledge

Written Examination
Question Worksheet

| | | |
|---|---|---|
| | Comprehension or Analysis | x |
| 10 CFR Part 55 Content: | 55.41 | 5, 10 |
| | 55.43 | |

Comments

**Modes of Operation**

The ADVs can be operated in either automatic or manual. As shown in Figure 9, the mode of operation is determined by the position of the ADV AUTO/MAN selector switches, PICs and CLOSE/OPEN control switches located on RTGB-202, PACB and the HSCP. The modes of control are MAN-MAN, AUTO-MAN, and AUTO-AUTO.

When operating an ADV electrically:

- The field winding of the DC motor is always supplied by Safety-Related 125 VDC. The valve cannot be operated electrically if DC power to the field is lost.

  - PP-254 (Train A) supplies the Train A ADVs (MV-08-18A/B).
  - PP-255 (Train B) supplies the Train B ADVs (MV-08-19A/B).

- DC power to the motor armature is supplied from either the:

  - same DC panels as the field winding when operating in the MAN-MAN mode, or
  - the modutronic unit in AUTO-MAN or AUTO-AUTO modes.

  - The modutronic units receive power from 120 VAC panels PP-201A (Train A) and PP-202 (Train B) for the Train A and Train B ADVs respectively. The modutronic unit converts the AC power to DC power for the MOV armature with an output based on the signal from the PIC. The PIC receives power from the same AC source as the modutronic unit.

The power supplies to the Unit 2 atmospheric dump and isolation valve motors are arranged such that loss of any single bus will not prevent any of the ADVs from either being closed or isolated. That is, if a Train A powered ADV cannot be closed, the Train B powered isolation valve can still be closed; and, if a Train A powered isolation valve cannot be closed, the Train B powered ADV can be closed. Likewise, this power scheme ensures at least one flow path should be available for steaming the S/G.

The following table provides an overview of the control modes.

| MODE | SELECTOR SWITCH | PIC CONTROLLER | ARMATURE POWER SOURCE |
|---|---|---|---|
| MAN-MAN | MAN | N/A | D.C. |
| AUTO-MAN | AUTO | Manual | A.C.→D.C. |
| AUTO-AUTO | AUTO | Auto | A.C.→D.C. |

**MAN-MAN Mode** - With the AUTO/MAN selector switch in MAN (manual), the respective ADV's position is determined by its CLOSE/OPEN switch.

- For example, at RTGB-202 with the SG 2A ADV AUTO/MAN selector switch in MAN and the SG 2A ADV CLOSE/OPEN switch positioned to OPEN, MV-08-18A strokes open while the control switch is held in the OPEN position. Refer to Figure 9.

- During operation above 15% power, the ADVs are maintained in the MAN-MAN (manual) mode to meet Technical Specification requirements.

**AUTO-MAN and AUTO-AUTO Modes** - With the AUTO/MAN selector switch in AUTO, ADV position is controlled from the respective PIC that sends an electrical signal to the modutronic unit (see Figure 9). A rheostat monitoring ADV position provides a feedback signal that stops valve movement when actual position matches desired position based on the input signal to the modutronic unit. Normally the PICs are maintained in manual control with the automatic actuation pressure setpoint at 900 psia.

AUTO-MAN Mode – With the PIC set to manual operation, the ADV can be positioned by pushing the up-arrow or down-arrow pushbuttons on the PIC.

AUTO-AUTO Mode - With the PIC in the automatic mode, valve control is based on the setpoint on the PIC. For example, as S/G pressure increases above setpoint, the controller output increases to the modutronic unit, which in turn repositions the ADV to open it more, limiting S/G pressure.
On the PACB in the Unit 2 Control Room, controls are provided for MV-08-19A for S/G

2A and MV-08-18B for S/G 2B, as illustrated on Figure 8. Control is functionally the same as at RTGB-202, except the power supply trains are reversed.

If DC power is lost to the ADV, the valve cannot be repositioned electrically in any mode of control due to loss of power to the DC motor field.

Response of an ADV following restoration of electrical power (e.g., EDG loading following a LOOP) is determined by the mode of control.

If DC power is lost and then regained while in the MAN-MAN mode, the valve will not move because there is no signal being generated to move it.

If AC power is lost to the modutronic unit and ADV controller and then regained while in the AUTO-MAN mode, the ADV will remain at the current valve position. The controller output is restored to its previous value, which is the input to the modutronic unit. Since the ADV fails as-is, the feedback signal from the rheostat should still match the demand position.

Note that if the ADV controller fails to zero with AC power still available to the modutronic unit, the ADV will close (if open) to match the input signal.

If AC power is lost to the modutronic unit and/or ADV controller and then regained while in the AUTO-AUTO mode, the ADV will go to the position dictated by the pressure setpoint on the PIC.

As actual pressure deviates from setpoint, the valve will open or close to control S/G pressure at the setpoint.

The pressure indicating bar on the controller (red bar) is one way to determine if AC power is lost to the ADV controller (i.e., the red bar fails low).

On Unit 2, Technical Specifications require all ADVs to be in Manual when above 15% power. (This is the MAN-MAN Mode.) Manual operation ensures the ADVs will be closed in the event of a steam line break, thus limiting the blowdown rate of the S/G. Below 15%, only one ADV may be in AUTO.

**MAIN STEAM SAFETY VALVES**

- The main steam safety valves protect the S/Gs and main steam piping from over-pressurization and are designed to pass steam flow equivalent to a NSSS power level of 2700 MW.

- The safety valves' capacity ensures overpressure protection even without the availability of the ADVs and the SBCS valves.

- There are eight 6" safety valves per header upstream of the MSIVs for a total of 16 valves per unit. Four safety valves are set at 1000 psia and four valves are set at 1040 psia per header. Refer to Figures 1 & 2.

- By using multiple safety valves protects against excessive blowdown/cooldown should one fail to reseat.

- Designed for 3% accumulation and 8% blowdown.

- The RCS shall not be heated above 325°F unless all 16 MSSVs are operable.

## MAIN STEAM ISOLATION VALVES (MSIV) OVERVIEW

The MSIVs perform a containment isolation function in addition to acting as the boundary between the S/Gs and the main steam header. The MSIVs and their support equipment required for containment isolation are designed to perform safety functions subsequent to a design basis earthquake (DBE) and are therefore rated Seismic Class I.

## S/G 2A ADVs

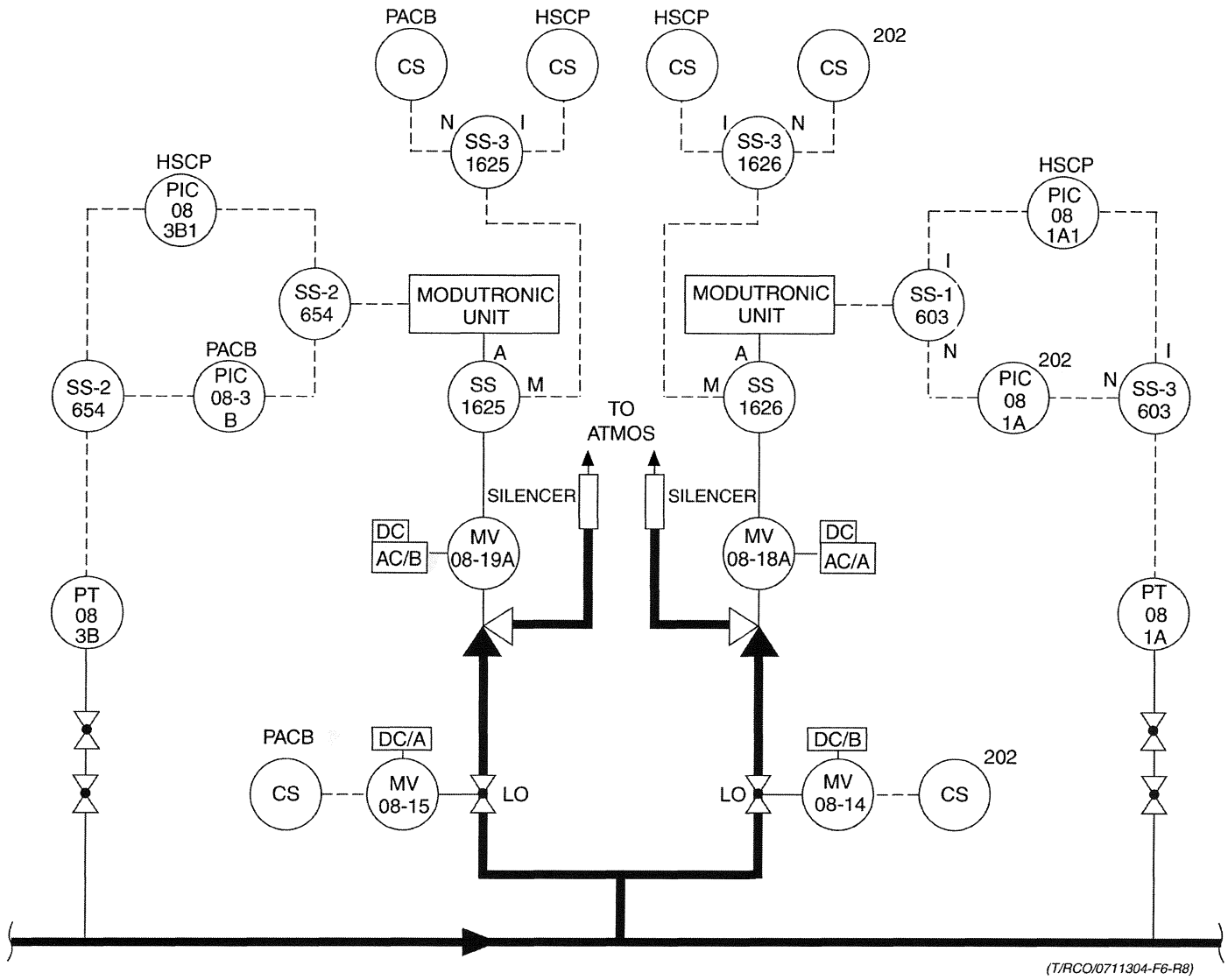


FIGURE 6

Written Examination
Question Worksheet

| Examination Outline Cross-reference: | Level | RO | SRO |
|---|---|---|---|
| | Tier # | 1 | |
| | Group # | 1 | |
| | K/A # | 2.2.44 | |
| | Importance Rating | 4.2 | |

000057 / Loss of Vital AC Inst bus / 6: Equipment Control / Ability to interpret control room indications to verify the status and operation of a system, and understand how operator actions and directives affect plant and system conditions.

Proposed Question: RO 15

Unit 1 is at 100% power, steady state. The following annunciator is received:

- G-26 'FW REG SYS OPERATING ON STANDBY PWR'

Shortly after annunciator G-36 comes in, numerous other annunciators come in, some of which include:

- 3A (B), 4A(B), 5A(B) HTR LEVEL HIGH/LOW
- 1A and 1B S/G LEVEL HIGH/LOW

Which of the following:
1) failure has occurred
2) states the response of the secondary
3) are the required Operator actions?

A. 1) Loss 120V AC Vital bus,
2) Heaters and SG levels are low,
3) Perform a rapid downpower to stabilize the plant

B. 1) Loss 1C 125V DC bus
2) Heaters and SG levels are low
3). Perform a rapid downpower to stabilize the plant

C. 1) Loss 120V AC Vital bus,
2) Heaters and SG levels are high
3) Manually close alternate drains on FW heaters

D. 1) Loss 1C 125V DC bus,
2) Heaters and SG levels are high,
3) Take manual control of FW Reg. valves.

Proposed Answer: A

Explanation (Optional):

Written Examination
Question Worksheet

A. Correct, loss of Vital AC puts FRV on standby power, alternate drains on heaters fail open, SG levels lower due to loss of Heater Drain Pumps on low flow.
B. 1C DC bus is backup power to FRV, but heaters and SG will be low
C. Would de-energize 1 MG set and annunciate, would not cause secondary perturbation.
D. Secondary side MCC would de-energize turbine LO pumps and give other alarms not associated with levels.

Technical Reference(s): 1-ONP-49.01 (Attach if not previously provided)

Proposed references to be provided to applicants during examination: _____

Learning Objective: PSL OPS SYS 503 LPC-10 (As available)

Question Source: Bank # _____
Modified Bank # _____ (Note changes or attach parent)
New x

Question History: Last NRC Exam _____

Question Cognitive Level: Memory or Fundamental Knowledge _____
Comprehension or Analysis X

10 CFR Part 55 Content: 55.41 5
55.43 _____

Comments:

R0.15



## APPENDIX A
## LOADS AFFECTED BY LOSS OF VITAL AC
(Page 1 of 1)

| LOAD | CKT | LOAD | CKT |
|---|---|---|---|
| Hydrogen Panel | 1 | Cond Pump. Motor BRG. Temp. | 2 |
| CCW Pump Motor BRG. Temp | 3 | CWP Pump Motor BRG. Temp. | 4 |
| FWP Pump BRG. Temp. Monitors | 5 | TCW Pump Motor BRG. Temp. | 6 |
| CB Load Ctr DEH Gov. Cntl. Cab. | 7 | Waste Concentrator | 8 |
| Excitation SWGR | 9 | $H_2$ Detector Panel | 10 |
| RTGB-101 / AC Distribution | 11 | RTGB-102 / AC and 45 V DC Distribution | 12 |
| RTGB-101 / AC Distribution | 13 | RTGB-102 / AC and 45 V DC Distribution | 14 |
| RTGB-101 / AC Distribution | 15 | Impulse Press. PT-22-27 & 22-28 | 16 |
| L.P. Htrs. Drain Control | 17 | RTGB-102 (FDW Reg. System) | 18 |
| Press. Control for Condenser Vac. Tnks. 1A1, 1A2, 1B1 & 1B2 | 19 | RTGB-102 (FDW Reg. System) | 20 |
| Moisture Separator and Drain Coll. to Hotwell Valves | 21 | RTGB-102 (FDW Reg. System) | 22 |
| Moisture Separator & Drain Coll. to Hotwell Valves | 23 | SPARE | 24 |
| Boric Acid Concentrator 1A | 25 | Boric Acid Concentrator 1B | 26 |
| L.P. Htr. 3A, 4A, and 5A Drain Controls | 27 | Nat'l Site EVAC Alarm Panel | 28 |
| Chemical Analyzer Cubicle & Radio Equip. Cab. | 29 | Chemical Analyzer Steam Gen. Panel System | 30 |
| Meterological Cab. #1 | 31 | RTGB-101 (Load Freq. Equip.) | 32 |
| PA (Gia-Tronics System) / Simulator Bldg. | 33 | Auxiliary Cab. | 34 |
| Chemical Analyzer Cub Unit 2 | 35 | Radio Paging | 36 |
| Data Processor | 37 | Post Accident Sample Control Panel Skid #4 | 38 |
| SPACE | 39 | SPACE | 40 |
| UNIT#1 SOER CAB | 41 | L.P. Htrs. 3B, 4B, and 5B Drain Controls | 42 |
| SPACE | 43 | SPACE | 44 |
| SPACE | 45 | | |

/R4

/R4

**END OF APPENDIX A**

## ANNUNCIATOR PANEL G

| | | | | | | | |
|---|---|---|---|---|---|---|---|
| 1 | 2 | 3 | 4 | 5 | 6 | 7 | 8 |
| 9 | 10 | 11 | 12 | 13 | 14 | 15 | 16 |
| 17 | 18 | 19 | 20 | 21 | 22 | 23 | 24 |
| 25 | 26 | 27 | 28 | 29 | 30 | 31 | 32 |
| 33 | 34 | 35 | 36 | 37 | 38 | 39 | 40 |
| 41 | 42 | 43 | 44 | 45 | 46 | 47 | 48 |

**FW REG SYS OPERATING ON STANDBY PWR**
**G-26**

| DEVICE: | LOCATION: | SETPOINT: |
|---|---|---|
| DCS COMP PT K1A_V | DCS | DC PP 118 supplying power to "A" side FWCS |
| DCS COMP PT K1B_V | DCS | DC PP 119 supplying power to "B" side FWCS |

**ALARM CONFIRMATION:**
1. Alarm on FPD Alarm Log screen.

**NOTE**
The FWCS is powered via fuses in RTGB 102 with a primary power source of Vital Bus #1 and an automatic backup transfer to 125Vdc PP 118 for "A" side and PP 119 for "B" side. Power transfer is via a static side-seeking ABT.

**OPERATOR ACTIONS:**
1. ENSURE all FWCS controllers operating as expected in Automatic.
2. ENSURE SG levels are controlling at 65% ± 5%.
3. Investigate loss of primary power source to FWCS.
4. Call I&C for assistance.

**CAUSES:** Loss of primary power supply.

**REFERENCES**
1. CWD 8770-B-327 SH 627
2. Spec-IC-028, Rev 2

/R3

## ANNUNCIATOR PANEL F

| | | | | | | | |
|---|---|---|---|---|---|---|---|
| 1 | 2 | 3 | 4 | 5 | 6 | 7 | 8 |
| 9 | 10 | 11 | 12 | 13 | 14 | 15 | 16 |
| 17 | 18 | 19 | 20 | 21 | 22 | 23 | 24 |
| 25 | 26 | 27 | 28 | 29 | 30 | 31 | 32 |
| 33 | 34 | 35 | 36 | 37 | 38 | 39 | 40 |
| 41 | 42 | 43 | 44 | 45 | 46 | 47 | 48 |

**4B LP HTR LEVEL HIGH/LOW**

**F-26**

**DEVICE:**
71 HI, LS-11-20B
71 L, LS-11-22B

**LOCATION:**

**SETPOINT:**
Elevation 44 feet, 2.875 inches
Elevation 42 feet, 10 inches

**ALARM CONFIRMATION:**
1. Local indication

**OPERATOR ACTIONS:**
1. Locally CHECK LG-11-19B, 4B LP Htr Level, to determine heater level.

> **NOTE**
> - If level in the 4A LP heater reaches the **low-low** setpoint, elevation 42 feet 6 inches, the 1B Heater Drain Pump will trip and cause annunciator F-44, 1B HTR DRN PUMP TRIP FLOW LOW/HTR LVL LO-LO, to alarm.
> - LCVs may be operated manually as directed by the SM / US.

2. VERIFY the following response to the **low** level alarm:
   A. LCV-11-18B1, 1B Htr Drn Pump Disch, modulating CLOSED to raise level.
   B. LCV-11-18B2, 4B LP Htr Alt Drain, CLOSED
   C. LCV-11-24B1, 5B HP Htr Normal Drain, maintaining 5B HP heater level.
3. VERIFY proper level control response to the **high** level alarm:
   A. LCV-11-18B1, 1B Htr Drain Pump Disch, modulating OPEN to lower LP Htr 4B level.
   B. LCV-11-18B2, 4B LP Htr Alt Drain, modulating OPEN to lower LP Htr 4B level.
4. If level in the 4B LP Feedwater Heater reaches the **high-high** level setpoint, elevation 44 feet 10 inches, Then VERIFY the following LCV response:
   A. LCV-11-18B1, 4B LP Htr Alt Drain, fails OPEN.
   B. LCV-11-24B1, 5B HP Htr Normal Drain, fails CLOSED.
   C. LCV-11-24B2, 5B HP Htr Alt Drain, modulating to maintain 5B HP heater level.

> **NOTE**
> Operation with Feedwater Heater Drain or MSR Drain valves open to the Condenser for greater than 72 hrs without prior Engineering evaluation shall be evaluated for potential detrimental effects to the associated drain line(s) and Condenser sparger(s). At the onset of the evolution, Engineering should be contacted for interim guidance until the expected duration is known.

**CAUSES:** LC-11-18B1, 4B LP Htr Level, failure could cause normal drain valve, LCV-11-18B1, to drive level high or low. LC-11-18B2, 4B LP Htr Level, failure could cause the alt drain valve, LCV-11-18B2, to open and drive level down. Failure of LS-11-20B, 4B LP Htr Level Hi, or LS-11-22B, 4B LP Htr Level Lo, could cause a false alarm. LS-11-23B, 4B LP Htr Level High-high, failing hi could cause LCV-11-18B2 to open and LCV-11-24B1 to close, causing a low level condition. A blown fuse will cause the affected LCV to go to its fail position. Feedwater heater tube(s) leakage may cause abnormally high heater level.

**REFERENCES:**
1. CWD 8770-B-327 sheet 667, 660
2. P&ID 8770-G-081 sheet 2
3. TEDB

/R1/R1 /R1 /R1 /R1 /R1A

Written Examination
Question Worksheet

| Examination Outline Cross-reference: | Level | RO | SRO |
|---|---|---|---|
| | Tier # | 1 | |
| | Group # | 1 | |
| | K/A # | AK3.02 | |
| | Importance Rating | 4.0 | |

000058/ Loss of DC Power / Knowledge of the reasons for the following responses as they apply to the Loss of DC Power: Actions contained in EOP for loss of dc power.

Proposed Question: RO 16

Given the following:

- Unit 1 tripped from 100% power.
- The 1A 125V DC bus de-energized on the trip.
- All other equipment operated as designed.

Which EOP-01 Safety Function requires a contingency action to be performed that if not taken, will result in transition to an EOP other than Reactor Trip Recovery?

A. RCS Heat Removal

B. Maintenance of Vital Auxiliaries

C. Core Heat Removal

D. RCS Pressure Control

Proposed Answer: D

Explanation (Optional):

A. MSR TCVs required to be closed, failure to do so would still be entry in to EOP-02
B. 1A EDG breaker would not close, failure to perform contingency would still be entry into EOP-02
C. CCW to RCPs would still be available although at a reduced flow, no contingency necessary.
D. Correct (PORV will be open, entry into EOP-03 required if contingency is not taken)

Technical Reference(s): 1-EOP-01 (Attach if not previously provided)

Proposed references to be provided to applicants during examination: _____

Learning Objective: _____ (As available)

Question Source: Bank # _____

Modified Bank # _____ (Note changes or attach parent)

New x

Question History: Last NRC Exam _____

Written Examination
Question Worksheet

| | | | |
|---|---|---|---|
| Question Cognitive Level: | Memory or Fundamental Knowledge | | _____ |
| | Comprehension or Analysis | | x |
| 10 CFR Part 55 Content: | 55.41 | 5,10 | |
| | 55.43 | _____ | |

Comments:

**7.0** OPERATOR ACTIONS

**7.1** Immediate Operator Actions

| INSTRUCTIONS | CONTINGENCY ACTIONS |
| --- | --- |
| **NOTE**<br>Loss of a Safety Related DC Bus will cause PORV (V1402 or V1404) to open. | |
| **1.** If pressurizer pressure is less than 2300 psia, Then ensure the PORVs, V1402 and V1404 are closed. | **1.** Close the PORV by placing the Override / Normal Range / Low Range switch to the OVERRIDE position or close V1403 or V1405, PORV Block Valves, if power is available to the PORV block valves. |

**END OF SECTION 7.1**

**4.0 OPERATOR ACTIONS** (continued)

# RCS PRESSURE CONTROL

| INSTRUCTIONS | CONTINGENCY ACTIONS |
|---|---|
| ☐ **4.** DETERMINE RCS Pressure Control acceptance criteria are met: | |
| **A.** VERIFY Pressurizer pressure is between 1800 and 2300 psia. | **A.1** If Pressurizer pressure is less than 2300 psia, and the PORV(s) are OPEN, Then PERFORM **ANY** of the following:<br>**1.** OVERRIDE the open PORV(s).<br>**2.** CLOSE the associated PORV block valve(s). |
| | **A.2** If Pressurizer pressure is less than 1600 psia, Then ENSURE **ALL** of the following:<br>**1.** SIAS has ACTUATED.<br>**2.** CIAS has ACTUATED.<br>**3.** **ONE** RCP in **EACH** loop is stopped. |
| **B.** VERIFY Pressurizer pressure is trending to between 2225 and 2275 psia. | **B.1** RESTORE and MAINTAIN Pressurizer pressure between 2225 and 2275 psia by performing **ANY** of the following:<br>**1.** ENSURE proper operation of the Pressurizer Pressure Control System.<br>**2.** Manually OPERATE heaters and spray. |
| **C.** VERIFY RCS subcooling is at least 20°F. | **C.1** If RCS subcooling is less than 20°F or RCP(s) exhibit cavitation, Then STOP **ALL** RCPs. |

/R23

Written Examination
Question Worksheet

| B Examination Outline Cross-reference: | Level | RO | SRO |
|---|---|---|---|
| | Tier # | 1 | |
| | Group # | 1 | |
| | K/A # | AK3.03 | |
| | Importance Rating | 4.0 | |

065 / Loss of Nuclear Service Water: Knowledge of the reasons as they apply to loss of nuclear service water: Guidance actions contained in EOP for loss of nuclear service water.

Proposed Question: RO17

Unit 2 is in a Station Blackout and preparing to receive power to the 2AB 4.16KV bus from the 1A Emergency Diesel Generator (the only running Unit 1 Diesel) via the Station Blackout crosstie. The RO performing 2-EOP-99, Appendix V, places the 2B ICW pump switch to Pull-to Lock. Which one of the following describes the primary reason for this manipulation?

A. To prevent the 2B ICW pump from starting on a depressurized header.

B. To ensure 2B Component Cooling Water pump is started before 2B ICW pump to prevent possible saltwater contamination of the CCW system.

C. To enable the interlock that will allow 2C ICW pump to be run when power is restored.

D. To ensure 2B ICW pump is not started due to diesel loading concerns in this electrical configuration.

Proposed Answer: D

Explanation (Optional):

A. Preventing a start on a depressurized header is a reason under normal conditions, not the primary reason in this case.
B. Normal operating practice is to start the CCW pump first but not the primary reason in this case.
C. If it was desired to run 1C ICW pump, the normal practice is to place the pump it is replacing in pull-to-lock, not the primary reason in this case.
D. Correct (with only 1 Unit 1 EDG running, charging pump operation is only allowed)

Technical Reference(s): 2-EOP-99, Appendix V (Attach if not previously provided)

Proposed references to be provided to applicants during examination: _____

Learning Objective: 0702830-10 (As available)

Question Source: Bank # _____
Modified Bank # _____ (Note changes or attach parent)
New x

Question History: Last NRC Exam _____

Question Cognitive Level: Memory or Fundamental Knowledge x

Written Examination
Question Worksheet

Comprehension or Analysis

10 CFR Part 55 Content: 55.41 4, 8

55.43

Comments:

**APPENDIX V**
**RECEIVING AC POWER FROM UNIT 1 USING SBO CROSSTIE**
(Page 6 of 9)

**SECTION 4: Restoring Loads With ONE Unit 1 EDG Running**

☐ **1.** REQUEST **Unit 1** to VERIFY that the crosstied EDG is carrying less than or equal to 2500 KW. (350 amps)

> **CAUTION**
> Restoring power to the vital 480V Load Centers will cause load sequence to occur within 35 seconds. Unit 1 will need to closely monitor EDG KW and 1AB 4.16 KV amps to ensure an overload condition will not occur.

☐ **2.** RESTORE power to the selected train vital 480V Load Centers by CLOSING the associated supply breakers:

* 2B2 and 2B5 Load Centers share a common 4.16KV supply breaker

| 2A2 480V Load Center (√) | 2B2 480V Load Center (√) |
|---|---|
| STATION SERVICE XFMR 2A2 (20213)____ | *480V STATION SERVICE XFMR 2B5 (20402)____ |
| 480V 2A2 FEEDER (40219)____ | 480V 2B2 FEEDER (40503)____ |

| 2A5 480V Load Center (√) | 2B5 480V Load Center (√) |
|---|---|
| 480V STATION SERVICE XFMR 2A5 (20210)____ | *480V STATION SERVICE XFMR 2B5 (20402)____ |
| 480V 2A5 FEEDER (40361)____ | 480V 2B5 FEEDER (40653)____ |

☐ **3.** VERIFY with **Unit 1** that the crosstied EDG is operating satisfactorily.

> **NOTE**
> The crosstied EDG KW and AB 4.16KV amps should be checked frequently as equipment is restored. Potential loads should be balanced against available capacity to ensure an overload condition will NOT occur.
> **REFER TO** Table 11, Emergency Diesel Generator Loading (SBO).

☐ **4.** START Charging Pumps **AS NECESSARY** to maintain Inventory Control safety function.

**APPENDIX V**
**RECEIVING AC POWER FROM UNIT 1 USING SBO CROSSTIE**
(Page 7 of 9)

**SECTION 4: Restoring Loads With ONE Unit 1 EDG Running** (continued)

☐ **5.** RESTORE power to the 2AB 480V Load Center by CLOSING the **TWO** crosstie breakers:

| 2A2 to 2AB 480V Load Center (√) | 2B2 to 2AB 480V Load Center (√) |
|---|---|
| 480V BUS TIE 2A2-2AB (40220)____ | 480V BUS TIE 2B2-2AB (40504)____ |
| 480V BUS TIE 2AB-2A2 (40702)____ | 480V BUS TIE 2AB-2B2 (40706)____ |

☐ **6.** START additional equipment as EDG load capacity permits. Do NOT exceed 3730 KW (530 amps) on the **Unit 1** EDG.

**End of Section 4**

Written Examination
Question Worksheet

| Examination Outline Cross-reference: | Level | RO | SRO |
|---|---|---|---|
| | Tier # | 1 | |
| | Group # | 1 | |
| | K/A # | AA2.04 | |
| | Importance Rating | 3.5 | |

000077/ Generator Voltage and Electric Grid Disturbances / 6 Ability to determine and interpret the following as they apply to Generator Voltage and Electric Grid Disturbances: VARs outside the capability curve.

Proposed Question: RO 18

A grid disturbance has occurred in South Florida. Both Units are at 100% power with the following parameters:

- Unit 1 MVARS 25 in the lag (out)
- Unit 2 MVARS 0

Which one of the following describes the voltage regulator adjustments that will have to be made by the ROs on EACH unit if the system dispatcher requests both units to be at St. Lucie administrative limit of minimum vars?

A. Unit 1 must raise voltage; while Unit 2 maintains voltage at its current value.

B. Unit 1 must lower voltage in response, Unit 2 must raise voltage.

C. Unit 2 must raise voltage; Unit 1 does not have to perform an action.

D. Unit 2 must raise voltage; in response, Unit 1 must raise voltage.

Proposed Answer: D

Explanation (Optional):

A. Correct manipulation by Unit 1, If Unit 2 maintains current value MVARS will be less than minimum allowed.
B. Incorrect Unit 1 manipulation, correct Unit 2 manipulation.
C. Correct manipulation for Unit 2, Unit 1 must also raise voltage.
D. Correct

Technical Reference(s): 1-GOP-201, generator capability curve (Attach if not previously provided)

Proposed references to be provided to applicants during examination: _____

Learning Objective: PSL OPS SYS 307 LPC-3 (As available)

Question Source: Bank # _____
Modified Bank # _____ (Note changes or attach parent)
New x

Question History: Last NRC Exam _____

Written Examination
Question Worksheet

| | | |
|---|---|---|
| Question Cognitive Level: | Memory or Fundamental Knowledge | _____ |
| | Comprehension or Analysis | x |
| 10 CFR Part 55 Content: | 55.41 5 | |

Comments:

**NOTE**

Extended Power Operations with less than all four Moisture Separator Reheaters in service shall have a documented engineering analysis on a case by case basis.

**4.11** ¶1 A Moisture Separator Reheater may be removed from service or placed in service while the unit is in operation. A 50°F instantaneous change of steam temperature to a Low Pressure Turbine is allowed provided a maximum rate of change of 100°F / hr is NOT exceeded.

**4.12** ¶1 The high initial response exciter is designed to respond to system disturbances too rapid for operator intervention prior to the onset of major equipment damage. If any voltage excursion was limited and controlled, Then ensure the following parameters are within allowable limits:

| | |
| --- | --- |
| Generator amperes | Less than or equal to 26 kiloamps per phase |
| Generator terminal voltage | 21 KV to 23 KV |
| Exciter field current | Less than or equal to 310 amps |
| 2A3 and 2B3 4.16 KV bus voltage | 3.95 KV to 4.35 KV |

**4.13** SEQUENTIAL VALVE is the preferred mode of valve control for the turbine. The turbine may be in SINGLE VALVE or SEQUENTIAL VALVE control mode while performing this procedure. Close monitoring of the turbine is required to ensure positive control is maintained based on the mode selected and the current power level.

**4.14** The differential temperature between the base and the cover of the High Pressure Turbine Cylinder shall not exceed 100°F.

**4.15** Main Generator reactive load should be maintained greater than or equal to 50 MVARs in the lag (out). This limit is imposed by Power System Technical Services to account for a 3-phase fault at Midway's 500/230 KV auto transformer.

**4.16** ¶4 During the pressurization of the Unit 1 Main Steam System, the possibility exists for the Turbine to roll of the Turning Gear or increase speed unexpectedly. This could result in the development of an electrical field in the Main Generator due to residual magnetism.

**4.17** ¶13 During turbine latching activities the possibility exists for the 15% bypass valves to transfer to their post trip state, manual action to reset them may be required to maintain steam generator levels.

## GENERATOR CAPABILITY CURVE

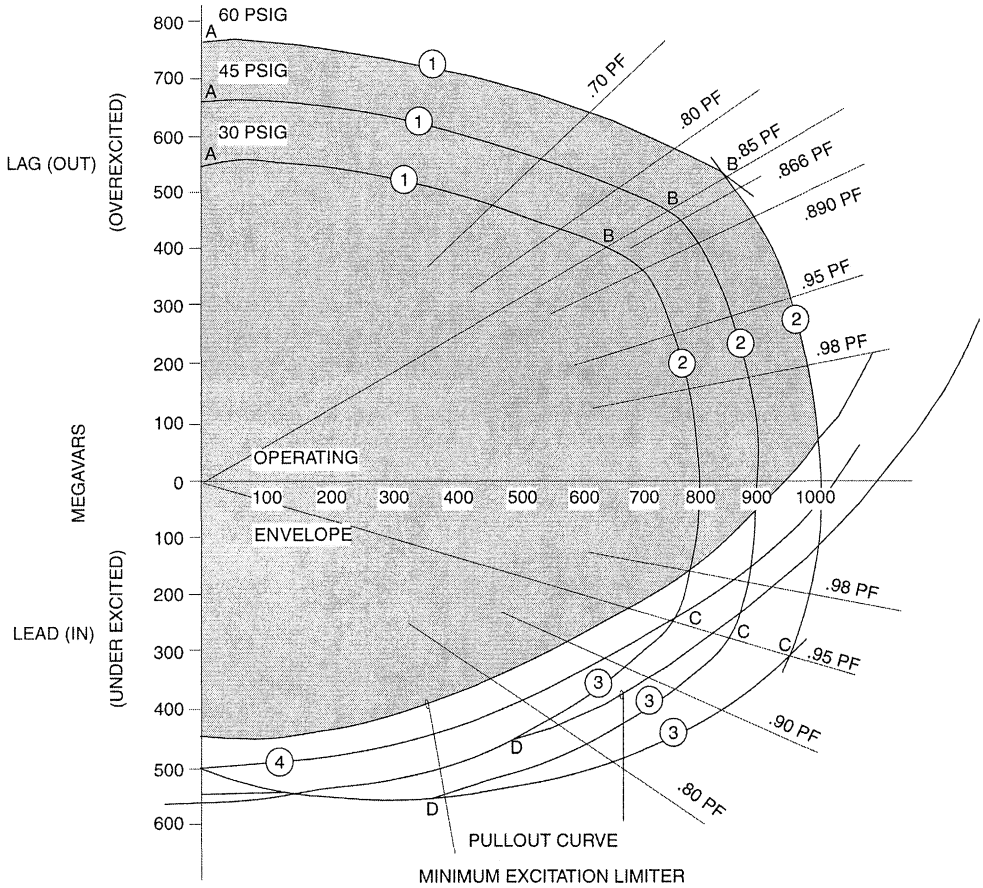


HYDROGEN INNER-COOLED TURBINE GENERATOR
CALCULATED CAPABILITY CURVE
1000 MVA .85 PF 60 PSIG $H_2$

(CURVE 1 ) ROTOR HEATING (158 EXCITER FIELD AMPS)

(CURVE 2 ) STATOR HEATING (2 6 2 4 3 GENERATOR AMPS)

(CURVE 3 ) STATOR CORE HEATING (END PLATES)

(CURVE 4 ) LOSS OF FIELD RELAY

*(T/RCQ/0711307-F18-R6)*

**FIGURE 16**

Written Examination
Question Worksheet

| Examination Outline Cross-reference: | Level | RO | SRO |
|---|---|---|---|
| | Tier # | 1 | |
| | Group # | 2 | |
| | K/A # | AK3.04 | |
| | Importance Rating | 3.8 | |

003 / Dropped Control Rod / 1 Knowledge of the reasons for the following responses as they apply to the Dropped Control Rod: Actions contained in EOP for dropped control rod.

Proposed Question: RO 19

Unit 1 is at 96% power following CEA #10 dropping fully into the core. Operators have performed all required actions and are preparing to withdraw CEA #10 in <60 minutes as required by COLR figure 3.1-2. As the RO attempts to withdraw CEA #10, annunciator R-26 "CEDS TROUBLE / CONTINUOUS GRIPPER VOLTAGE HIGH" locks in. The SNPO in the cable spreading room identifies CEA #11 as the source of the alarm. Which one of the following is the correct operator action / reason concerning the CEA anomalies?

A. Continue realignment of CEA #10 then place CEA #11 on the hold bus. The Tech Spec Action that applies to CEA #10 takes precedence over the administrative requirements that apply to CEA #11.

B. Place CEA #11 on the hold bus then realign CEA #10. Coil damage could occur to CEA #11 if not placed on the hold bus within a shorter period of time than the time to realign CEA #10.

C. Continue realignment of CEA #10 then place CEA #11 on the hold bus. CEA #10 and CEA #11 are in the same subgroup and it will be impossible to withdraw CEA #10 if its subgroup is placed on the hold bus.

D. Place CEA #11 on the hold bus then realign CEA #10. R-26 is a common annunciator with no reflash capability and is procedurally required to be clear prior to withdrawal of any CEAs.

Proposed Answer: B

Explanation (Optional):

A. Statement partially correct – CEA 10 is a TS action whereas CEA 11 is not.
B. Correct
C. Would be correct if on Unit 2
D. Not required by the procedure

Technical Reference(s): 1-0110030 (Attach if not previously provided)

Proposed references to be provided to applicants during examination: _____

Learning Objective: PSL OPS SYS 405-14 (As available)

Question Source: Bank # _____

Modified Bank # _____ (Note changes or attach parent)

Written Examination
Question Worksheet

| | | |
|---|---|---|
| | New | x |
| Question History: | Last NRC Exam | |
| Question Cognitive Level: | Memory or Fundamental Knowledge | |
| | Comprehension or Analysis | x |
| 10 CFR Part 55 Content: | 55.41 | 5, 10 |
| | 55.43 | |

Comments:

Ro·19



## ¶1 APPENDIX J
## CEDS TROUBLE / CONTINUOUS GRIPPER VOLTAGE HIGH (K-26)
(Page 1 of 6)

**CAUTION**
If this Appendix is being performed due to a LOCKED IN Annunciator (K-26) alarm, Section 2, Placing CEAs On The Hold Bus, must be completed within 10 minutes to prevent possible Gripper Coil damage.

**NOTE**
OBTAIN CEA Transfer Key (Key #5) from US.

**1.** Diagnosing Alarm Indications

**NOTE**
The ACTM has two trouble indications: Current Trouble & Historical Trouble

- For Current Trouble, the LED flashes continuously.
- For historical Trouble, the LED flashes for 4 seconds, then off for 4 seconds.
- When K-26 is LOCKED IN, the alarm is NOT from an ACTM with Historical Trouble.

**A.** DETERMINE the affected CEA(s) by observing the timer module LEDs for each CEA.

**1.** If only **one** CEA timer module has the following LEDs lit:

- ABNORMAL VOLTAGE
- TROUBLE (flashing continuously)

Then PLACE the CEA on the Hold Bus in accordance with Section 2, Placing CEAs On The Hold Bus.

**2.** If the following LEDs are NOT lit on any of the CEAs:

- ABNORMAL VOLTAGE
- TROUBLE (flashing continuously)

Then IDENTIFY the CEA timer module(s) that does NOT have LEDs flickering.

Written Examination
Question Worksheet

| Examination Outline Cross-reference: | Level | RO | SRO |
|---|---|---|---|
| | Tier # | 1 | |
| | Group # | 2 | |
| | K/A # | AA2.01 | |
| | Importance Rating | 3.4 | |

000028 / Pressurizer Level Control Malfunction / 2 Ability to determine and interpret the following as they apply to the Pressurizer Level Control Malfunctions: PZR level indicators and alarms.

Proposed Question: RO 20

Unit 1 is at 100% power when the following annunciator is received:

H-19 PZR CHANNEL X LEVEL HIGH/LOW

Which one of the following malfunctions would have caused this alarm?

A. Thot control channel fails high.

B. Tref pressure transmitter fails low.

C. Tcold control channel fails low.

D. Tcold control channel fails high

Proposed Answer: C

Explanation (Optional):

A. Level program at maximum, not much response
B. T-ref indication would go to minimum, no effect on level
C. Correct, +10% deviation from setpoint
D. Level program at maximum, not much response

Technical Reference(s): 0711402 (Attach if not previously provided)

Proposed references to be provided to applicants during examination: _____

Learning Objective: 0702402-8 (As available)

Question Source: Bank # _____
Modified Bank # _____ (Note changes or attach parent)
New x

Question History: Last NRC Exam _____

Question Cognitive Level: Memory or Fundamental Knowledge _____
Comprehension or Analysis x

10 CFR Part 55 Content: 55.41 7
55.43 _____

Comments:

Written Examination
Question Worksheet

R0 2 0

| REVISION: | PROCEDURE TITLE: | PANEL: |
|---|---|---|
| 0 | ANNUNCIATOR RESPONSE PROCEDURE | H |
| PROCEDURE NO: | | WINDOW: |
| 1-ARP-01-H19 | ST. LUCIE UNIT 1 | 19 |

## ANNUNCIATOR PANEL H

| | | | | | |
|---|---|---|---|---|---|
| 1 | 2 | 3 | 4 | 5 | 6 |
| 7 | 8 | 9 | 10 | 11 | 12 |
| 13 | 14 | 15 | 16 | 17 | 18 |
| 19 | 20 | 21 | 22 | 23 | 24 |
| 25 | 26 | 27 | 28 | 29 | 30 |
| 31 | 32 | 33 | 34 | 35 | 36 |

**PZR CHANNEL X LEVEL HIGH/LOW**

**H-19**

**DEVICE:**
LA-1110XH 63X/138
LA-1110XL 63X/138

**LOCATION:**
RAB/RTGB-103
RAB/RTGB-103

**SETPOINT:**
+10% deviation from program level
-5% deviation from program level

**ALARM CONFIRMATION:**
1. LIC-1110X, Pressurizer Level
2. LR-1110, Pressurizer Level
3. LI-1110X, Pressurizer Level
4. LR-1110X, Pressurizer Level

**OPERATOR ACTIONS:**
1. EVALUATE affected channel indication against redundant channels to determine if alarm is valid.
2. **GO TO ONOP 1-0120035, Pressurizer Pressure and Level.**

**CAUSES:** Alarm condition may be caused by at least **ONE** of the following conditions:
- Rapid load change
- Malfunction of the Pressurizer level control system
- RCS leakage
- Charging/Letdown flow mismatch due to a mechanical failure:
  - Charging pump/line failure
  - Letdown valve/line failure

**REFERENCES:**
1. CWD 8770-B-327 sheets 139 and 138
2. P&ID 8770-G-078 sheet 110A
3. TEDB

# DETAILED DESCRIPTION

## REACTOR PROGRAM UNIT CALCULATOR (RPUC)

The RPUC performs the majority of calculations required by the RRS. It does so by means of internal calculators, alarm/inhibit bistables, and comparative/summing circuitry. The parameters generated by the calculators are used as inputs to the bistables, comparative circuitry, and to other units of the RRS. Refer to Figure 6.

There are four functions provided by the RPUC:

- $T_{AVG}$ calculator
- Pzr level setpoint ($L_{SP}$) calculator
- $T_{REF}$ calculator
- A signal to prohibit automatic CEA movement at low power levels.

### $T_{AVG}$ Calculator

The $T_{AVG}$ calculator uses 4-20 mA current inputs of ($T_{HOT}$ and $T_{COLD}$) to determine $T_{AVG}$. The 4-20 mA (1-5 volt) output signal corresponds to 515°F – 615°F.

$$T_{AVG} = \frac{T_{HOT} + T_{COLD}}{2}$$

Refer to Figures 7 and 8. While there is only one $T_{HOT}$ RTD per loop, on Unit 1 the operator may select either of two RTDs in each of the loop cold legs [only one cold leg RTD]. This feature allows switching to the alternate temperature input in the event of an RTD failure, permitting the continued use of the same RRS cabinet. The selector switches for these RTDs are located on RTGB 103.

- [There is only one RTD per cold leg.]
- [The operator must switch RRS cabinets if the $T_{COLD}$ RTD fails].

The $T_{AVG}$ output can be generated from either one or both of the loops' inputs using selector switches inside the Test Panel. Refer to Figure 4. The $T_{AVG}$ output is directed to:

- a recorder on RTGB 104 [204]
- the SBCS
- $L_{SP}$ calculator
- circuitry where it is compared against the calculated value of $T_{REF}$

**Pressurizer Level Setpoint ($L_{SP}$) Calculator**

The $T_{AVG}$ calculator output is the input to the $L_{SP}$ calculator. Figure 9 graphically illustrates the program used to develop $L_{SP}$. The output signal of the $L_{SP}$ calculator (a 4-20 mA current signal corresponding to 0-100% pzr level) is sent, via the RRS Selector Switch, to the pzr level control system to vary pzr level with changes in $T_{AVG}$.

- The output is also sent to a recorder on RTGB 103 [203]. Refer to Figure 10.

The shape of the curve reflects a "best fit" regarding stretch power and the $T_{AVG}$ program used as power is raised.

**$T_{REF}$ Calculator**

The $T_{REF}$ calculator input is turbine first-stage pressure ($P_{TFS}$), a 4-20 mA current signal corresponding to 0-125% power. Refer to Figure 11. Figure 12 graphically illustrates the program that develops the $T_{REF}$ signal. This is a linear signal that is fixed at hot zero power (532°F) and is variable at the 100% power value.

After each core reload and prior to startup, a new 100% $T_{REF}$ value is determined based on reload calculations. If required, I&C will adjust the program circuitry. When the unit reaches 100% power, the $T_{REF}$ value can again be adjusted if necessary to equal $T_{AVG}$.

**NOTE:** The 100% power $T_{REF}$ value shown on Figure 12 is a nominal value.

The $T_{REF}$ signal (a 1-5 volt signal corresponding to 515° to 615°F) is sent to a recorder on RTGB 104 [204], and is compared to the calculated $T_{AVG}$ to produce a temperature error signal, $E_T$. Refer to Figure 13.

$E_T$ is an input to the following: (Refer to Figure 14.)

- $T_{AVG} - T_{REF}$ alarm bistable which generates:
  - High $T_{AVG} - T_{REF}$ annunciator
  - High $T_{AVG} - T_{REF}$ AWP
  - Low $T_{AVG} - T_{REF}$ annunciator

- Reactor Control Unit Calculator (RCUC)
  - CEA status (direction)
  - CEA speed

**CEA Auto Motion Low Power Prohibit**

This function is carried out by the RPUC with the input of $\phi_N$. A bistable prevents the RCUC from carrying out any automatic CEA movements until reactor power has increased above 15% power. On a downpower transient, the bistable will block automatic control when power decreases below 11%. Refer to Figures 15 and 16.

- Annunciator K-12 [K-6], CEA AUTO MOTION LOW POWER PROHIBIT, is associated with this function.

## REACTOR CONTROL UNIT CALCULATOR (RCUC)

**NOTE:** The RCUC material is included for informational purposes. Automatic control of CEAs is currently disabled at PSL.

The RCUC has the following inputs:

- $E_T$, from the RPUC
- $\phi_N$, from the RRS NI Control Channels
- $P_{TFS}$, turbine first stage pressure (same signal as $T_{REF}$ input)

$\phi_N$ and $P_{TFS}$ are compared to develop a power error signal ($E_B$). Refer to Figure 17. Both error signals, $E_T$ and $E_B$, are dynamically compensated to provide signals that take into account "real time" plant conditions. These compensated error signals are sent to a summer to compute the summed error signal ($E_C$). Refer to Figure 18. $E_C$ is used to develop the CEA status (withdraw/insert), and speed (hi/lo) signals. Refer to Figure 19.

The CEA status signal is generated in accordance with the bistable illustrated in Figure 20. If CEA motion is required, the bistable will close the appropriate contact to signal the CEA Control System of the necessary movement (withdrawal or insertion). An additional contact will also close, energizing a status lamp on the reactivity section of the control board to indicate that CEA motion is being demanded.

Figure 15 illustrates the bistable used to produce the CEA speed signal. If the error signal is greater than 4°F (either plus or minus), the bistable will open a contact to signal the CEDS that fast speed (30 inches per minute) movement is required. When the error signal decreases to less than 2°F (either plus or minus), the bistable will close the contact to switch to a slow speed signal (3 inches per minute). This output signal from the bistable is interlocked such that if the selected RRS is put in test, the speed contact will be closed resulting in a slow speed signal. An additional contact is provided in the bistable circuitry to cause a status lamp on the reactivity section of the control board to indicate whether fast or slow speed is being demanded.

## RRS SELECTOR SWITCH

Each RRS cabinet operates independently. By use of the RRS Selector Switch, the operator may select the cabinet that will be used for control. The Selector Switch is a two-position switch located on RTGB 104 [204]. Refer to Figure 21. The switch positions are RRS No. 1 and RRS No. 2. If the selected RRS is taken out of operate, the operator receives annunciator K-36[K-14], RRS SELECTED INOPERATIVE. The annunciator also sounds if the selected drawer loses power.

# SYSTEM OPERATION

## PRECAUTIONS AND LIMITATIONS

- The control board instrumentation should be compared with the outputs of the RRS to ensure that the RRS is operating properly.

- Do not take the Function Switch out of the OPERATE position when the RRS Selected light is lit on the RRS test panel; this action will affect the Pzr Level Control System.

- During all CEA motion, the nuclear instrumentation and $T_{AVG}$ indicators should be observed frequently for expected response.

- Any time an adjustment is made or a test performed on an RRS channel, the opposite RRS channel shall be selected for control.

## NORMAL OPERATION

Starting from an initial power level between 15% and 100% power, the RRS is designed to handle step changes in power of up to 10% (15% to 90% power for an up-step, 25% to 100% power for a down-step), or a ramp change in power of 5% per minute.

A reduction in turbine load causes turbine first-stage pressure to decrease. This is sensed by the $T_{REF}$ calculator, causing $T_{REF}$ to become less than $T_{AVG}$. This temperature difference results in a Temperature Error signal ($E_T$) being generated and sent to a summing junction. Additionally, the rate of change of turbine first-stage pressure (turbine power) is high as compared to the rate of change of nuclear power. This generates a second error signal, "Power" Error ($E_B$), which is also sent to the summing junction. Each of the error signals is such that, even separately, they would result in an insertion signal from the CEA status bistable. The summed error signal ($E_C$) then does likewise and automatic CEA insertion is demanded.

4. Identify the power supplies to the RRS *

5. Evaluate the operations of the RRS, including operating bands and setpoints as applicable for the following:

   A. $T_{avg}$ calculation *

   B. $T_{ref}$ calculation *

   C. CEA speed signal

   D. CEA status signal *

   E. Pressurizer level setpoint calculation *

6. Predict the response of the RRS to the following control manipulations:

   A. Changing channels with the RRS selector switch

   B. Taking the Function Switch out of the OPERATE position when the RRS Selected light is lit on the RRS test panel.

7. Predict the effects of a loss of RRS on the following plant systems:

   A. Control element drive system *

   B. Pressurizer level control system *

   C. Steam bypass control system *

8. Evaluate the effects on RRS operations to the following:

   A. $T_{hot}$ failure *

   B. $T_{cold}$ failure *

   C. First stage pressure signal failure *

   D. Nuclear power signal failure *

- STAs are only responsible for objectives marked with an asterisk

Written Examination
Question Worksheet

| Examination Outline Cross-reference: | Level | RO | SRO |
|---|---|---|---|
| | Tier # | 1 | |
| | Group # | 2 | |
| | K/A # | 2.2.40 | |
| | Importance Rating | 3.4 | |

000032 / Loss of Source Range NI / 7 Equipment Control / Ability to apply Technical Specifications for a system.

Proposed Question: RO 21

Unit 2 is in mode 6, refueling in progress. Startup Nuclear Instrumentation channel 2A has just failed LOW. Which one of the following describes the correct action concerning core alterations?
(assume 2B Startup Nuclear Instrumentation channel operable)

Core alterations:

A. can continue because only one startup channel is required to be operable.

B. must be suspended until the 2A Startup channel is restored to operable.

C. can continue when one Appendix R Excore Nuclear Monitoring channel has been determined to be operable and available.

D. must be suspended until Reactor Engineering approves the use of an additional Wide Range Nuclear Instrumentation channel.

Proposed Answer: C

Explanation (Optional):
A. One is acceptable *provided* an excore channel is available
B. Tech Specs requires two startup *range* channels to be operable which includes excores
C. Correct
D. Wide Range is used on Unit 1, not Unit 2

Technical Reference(s): 3200090 (Attach if not previously provided)

Proposed references to be provided to applicants during examination: _____

Learning Objective: _____ (As available)

Question Source: Bank # _____
Modified Bank # _____ (Note changes or attach parent)
New x

Question History: Last NRC Exam _____

Question Cognitive Level: Memory or Fundamental Knowledge x
Comprehension or Analysis _____

10 CFR Part 55 Content: 55.41 10

Written Examination
Question Worksheet

55.43 _____

Comments:

RO-21



**4.8** (continued)

**5.** Each fuel assembly and CEA shall be oriented according to the following table:

| FUEL AND CEA ORIENTATIONS | | |
|---|---|---|
| | Unit 1 (Serial Numbers) | Unit 2 (serial Numbers) |
| Fuel Assembly | North or Northwest Web | Southwest Web |
| Full Strength CEAs | Northwest Web | Southwest Web |
| Reduced Strength CEA Orientations | Core locations L19 and L3 CEAs are oriented to the Southwest Web. | Core locations C11, D4, G7, R15, V18 and W11 CEAs are oriented to the Northwest Web. |

**A.** The proper orientation of assemblies shall be established in the Fuel Storage Area and verified after placement in the core.

**B.** CEA serial numbers should be cross-referenced against the cycle specific core and SFP maps to ensure compliance with CEA requirements of the appropriate unit cycle specific reload PCM.

**6.** The Reactor Engineering Supervisor shall periodically check the method being used to calculate 1/Ms.

**7.** After completion of each fuel bundle movement into the core, approval shall be obtained from the Refueling Center, based on the 1/M data, before the next fuel bundle is moved into the core.

**8.** If mechanical damage to a fuel assembly occurs, Then STOP fuel movement and refer to appropriate ONOP 1600030. The loading shall not resume without approval of the Refueling Supervisor and Reactor Engineering Supervisor.

**9.** Prior to resuming fuel movement following a delay, RE shall ASSESS the signals obtained from the nuclear instruments used for count rate monitoring. This is meant to be a simple qualitative assessment for expected value and response, based on previous count rate data.

**10.** (Unit 2 Only) If one of the two Startup Channels R-005/006 are out of service, Then one of the Appendix R channels can be used in lieu of the Startup Channel as follows:

| Startup Channel | Display Device Tag Number | Comparable Appendix R Channel | Display Device Tag Number |
|---|---|---|---|
| Ch 1 RE-005 | JR-005 | RE-26-80B | RI-26-80B4 |
| Ch 2 RE-006 | JR-006 | RE-26-80A | RI-26-80A4 |

UNIT 2

## 3/4.9.2 INSTRUMENTATION

### LIMITING CONDITION FOR OPERATION

3.9.2 As a minimum, two startup range neutron flux monitors shall be OPERABLE and operating, each with continuous visual indication in the control room and one with audible indication in the containment and control room.

**APPLICABILITY:** MODE 6.

**ACTION:**

a. With one of the above required monitors inoperable or not operating, immediately suspend all operations involving CORE ALTERATIONS or operations that would cause introduction into the RCS, coolant with boron concentration less than required to meet the boron concentration of Technical Specification 3.9.1.

b. With both of the above required monitors inoperable or not operating, determine the boron concentration of the Reactor Coolant System at least once per 12 hours.

c. The provisions of Specification 3.0.3 are not applicable.

### SURVEILLANCE REQUIREMENTS

4.9.2 Each startup range neutron flux monitor shall be demonstrated OPERABLE by performance of:

a. A CHANNEL CHECK at least once per 12 hours,

b. A CHANNEL FUNCTIONAL TEST within 8 hours prior to the initial start of CORE ALTERATIONS, and

c. A CHANNEL FUNCTIONAL TEST at least once per 7 days.

## REFUELING OPERATIONS

UNIT 1

## INSTRUMENTATION

### LIMITING CONDITION FOR OPERATION

3.9.2 As a minimum, two wide range logarithmic neutron flux monitors shall be operating, each with continuous visual indication in the control room and one with audible indication in the containment.

**APPLICABILITY:** MODE 6.

**ACTION:**

With the requirements of the above specification not satisfied, immediately suspend all operations involving CORE ALTERATIONS or operations that would cause introduction into the RCS, coolant with boron concentration less than required to meet the boron concentration of Technical Specification 3.9.1. The provisions of Specification 3.0.3 are not applicable.

### SURVEILLANCE REQUIREMENTS

4.9.2 Each wide range logarithmic neutron flux monitor shall be demonstrated OPERABLE by performance of:

a. A CHANNEL FUNCTIONAL TEST at least once per 7 days.

b. A CHANNEL FUNCTIONAL TEST within 8 hours prior to the start of CORE ALTERATIONS, and

c. A CHANNEL CHECK at least once per 12 hours during CORE ALTERATIONS.

Written Examination
Question Worksheet

| Examination Outline Cross-reference: | Level | RO | SRO |
|---|---|---|---|
| | Tier # | 1 | |
| | Group # | 2 | |
| | K/A # | AA1.13 | |
| | Importance Rating | 3.9 | |

000037 / Steam Generator Tube Leak / 3 Ability to operate and / or monitor the following as they apply to the Steam Generator Tube Leak: S/G blowdown radiation monitors.

Proposed Question: RO 22

A steam generator tube leak of about 50 gpm has occurred on Unit 2. The crew is performing a downpower and is at 90% power. Steam Generator Blowdown Monitors went to HIGH alarm.

As the downpower reaches 60%, the leak increases to 70 gpm. Which of the following states the expected indication of the Steam Generator Blowdown PC11 indication (PLP-121) Blowdown activity for this increased leak rate?

PLP-121 Blowdown activity will:

A. NOT change due to the monitored sample being in a stagnant fluid.

B. NOT change due to the lower power level, even though a higher leak rate.

C. INCREASE due to the increased leak rate.

D. DECREASE due to the lower power level.

Proposed Answer: A

Explanation (Optional):

A. Correct, HIGH alarm isolate SG Blowdown isolates sample flow
B. Lower power level will have a negligible affect
C. Would be true if sample didn't isolate
D. No sample flow.

Technical Reference(s): 2-0830030, 2-ONP-26.01 Process Radiation Monitors (Attach if not previously provided)

Proposed references to be provided to applicants during examination: _____

Learning Objective: 0702825-03 (As available)

Question Source: Bank # _____
Modified Bank # _____ (Note changes or attach parent)
New x

Question History: Last NRC Exam _____

Question Cognitive Level: Memory or Fundamental Knowledge _____

Written Examination
Question Worksheet

Comprehension or Analysis x

10 CFR Part 55 Content: 55.41 7
55.43

Comments:

**4.2** Steam Generator Blowdown Monitors (continued)

**INSTRUCTIONS** **CONTINGENCY ACTIONS**

**2.** If a S/G Blowdown monitor has malfunctioned, Then:

**A.** NOTIFY I&C.

**B.** NOTIFY Chemistry.

**C.** REFER TO Chemistry Procedure C-200, Offsite Dose Calculation Manual (ODCM), Section 3.3.3.9, Radioactive Liquid Effluent Monitoring Instrumentation, for applicable action requirements.

**NOTE**

- The only plant condition that will cause a valid HIGH alarm on the S/G Blowdown Monitor is a Primary to Secondary S/G tube leak.
- The S/G Blowdown Radiation Monitors isolate on a HIGH alarm; the monitored sample will be from the stagnant fluid left in the piping and is NOT a valid indication of S/G activity.
- The Air Ejector process monitor may be a valid indication of S/G activity when the S/G Blowdown monitor is isolated.

**3.** If the affected monitor is functioning properly and indicates high activity, Then PERFORM the following:

**A.** If PLP-121 is in HIGH alarm, Then ENSURE the following:

- FCV-23-3 is CLOSED
- FCV-23-7 is CLOSED

During a LOCA inside containment, depending on the location of the break, it may or may not be possible to isolate the break and stop the outflow of coolant from the RCS. But the leaked fluid stays inside the containment, i.e., collects in the containment sump, and is available for recirculation through the RCS. A LOCA outside containment (e.g., letdown line break) is easily terminated by closing the isolation valves situated inside the containment. However, during a SGTR event, the leaked RCS fluid (or a part of it) leaves the containment via the main steam system.

The loss of primary fluid can be terminated by isolating the affected SG and reducing the RCS pressure until it is about equal to the pressure of the affected SG. When the two pressures are equalized, the leak flow is reduced to zero. When the affected SG cannot be isolated (e.g., a stuck open SG safety valve), the flow of primary fluid to the SG may continue until the RCS pressure is reduced to the atmospheric pressure. Such an event will result in the loss of a larger amount of primary coolant and a larger offsite dose in comparison to those for a SGTR scenario with the affected SG isolated.

A SGTR is characterized by specific parameters that are indicated in the control room. Some of these indications are:

1. Radiation monitors indicating an increase in activity levels in the air ejector discharge, the SG blowdown lines, the main steam lines, the plant vent, and/or by the SG liquid samples.

2. Decreasing level in the Volume Control Tank (VCT).

3. An increase in the charging flow and/or a decrease in letdown flow that cannot be accounted for otherwise.

4. SG water level remaining relatively constant for a small rupture or increasing slowly in the case of a larger rupture.

5. Containment temperature and pressure remaining unchanged.

## APPENDIX A
## ACTIONS IN MODE 1 THROUGH MODE 3 (SIAS NOT BLOCKED)
(Page 1 of 13)

| INSTRUCTIONS | CONTINGENCY ACTIONS |
|---|---|
| **1.** If at any time RCS leakage exceeds the capacity of the charging pumps and pressurizer level cannot be maintained, Then:<br><br>**A.** If in Modes 1 and 2, Then trip the reactor and turbine and implement 2-EOP-01, Standard Post Trip Actions.<br><br>**B.** If in Mode 3 (SIAS NOT Blocked), Then implement 2-EOP-04, Steam Generator Tube Rupture. | |

**NOTE**

¶1 Quick diagnosis of a tube leak and subsequent rapid isolation of the effected S/G will minimize secondary contamination and radiation exposure. Observation of S/G Blowdown Radiation Monitors may assist in validating SJAE Radiation Monitor indications, and may become the primary measured indication if the SJAE Radiation Monitor is out-of-service. Even before confirmation of a tube leak has been established, planning and preparation for unit shutdown and mitigating the affects should commence, by performing notifications, procedure reviews, crew briefings, and ensuring resources are available to tend to the unit conditions.

| | |
|---|---|
| **2.** Ensure sufficient charging pumps are operating and maintaining pressurizer level. | **2.** If pressurizer level is NOT being maintained, Then isolate letdown to assist in maintaining pressurizer level. |
| **3.** If the steam generator blowdown rad monitor is in High Alarm, Then ensure steam generator blowdown and sample valves from the affected steam generator have closed on high radiation. | **3.** Manually close the S/G blowdown and sample valves from the affected steam generator. |
| **4.** Notify Health Physics of present plant conditions and to conduct secondary area radiation surveys. | |

## APPENDIX A
## ACTIONS IN MODE 1 THROUGH MODE 3 (SIAS NOT BLOCKED)
(Page 2 of 13)

**INSTRUCTIONS** **CONTINGENCY ACTIONS**

**NOTE**

- A time delay may exist between an increase in SJAE monitor reading and Steam Generator Blowdown monitor readings.
- Steam Generator Blowdown sample isolates on Steam Generator Blowdown process monitor high radiation signal.

**CAUTION**

IF conditions of Steam Generator Tube Leakage Change, THEN REDIAGNOSIS of shutdown conditions is REQUIRED to ensure compliance with EPRI guidelines and Technical Specifications.

**5.** CHECK Air Ejector and / or Steam Generator Blowdown monitor reading.

- Log radiation monitor readings every 15 minutes. (Data Sheet 2)

**5.** If Steam Generator sample flow is isolated due to CIAS or high radiation, Then perform the following, to regain sample flow only:

- PLACE control switch for FCV-23-7/9 to CLOSE / OVERRIDE position
- OPEN FCV-23-7/9

**6.** If Air Ejector and / or Steam Generator Blowdown monitor shows step rise or continuous rise, Then perform the following:

**A.** DIRECT Chemistry to implement COP-06.05, High Activity in a Steam Generator.

**B.** ESTIMATE primary to secondary leakage by comparing Air Ejector monitor (preferred) and / or Steam Generator Blowdown monitor reading with Daily Chemistry Report.

**B.** If it is not possible to estimate primary to secondary leakage or the radiation monitors are out-of-service, Then determine leak rate by Chemistry sample.

Written Examination
Question Worksheet

| Examination Outline Cross-reference: | Level | RO | SRO |
|---|---|---|---|
| | Tier # | 1 | |
| | Group # | 2 | |
| | K/A # | AA1.21 | |
| | Importance Rating | 3.9 | |

068 / Control Room Evacuation / 8 Ability to operate and / or monitor the following as they apply to the control room evacuation: transfer of controls from the control room to shutdown panel or local control.

Proposed Question: RO 23

Unit 1 has evacuated the control room due to a fire. 1-ONP-100.02, "Control Room Inaccessability "is being implemented.

The following Appendices are complete and control is established at the Remote Shutdown panel.

- RCO A subsequent Actions
- RCO B subsequent Actions
- US subsequent Actions
- SNPO subsequent Actions

A Loss of Offsite Power JUST occurred.

Which of the following states the status of the Emergency Diesel Generators (EDG's)?

A. Both EDG's will require a manual start. When started, the output breakers will AUTOMATICALY close.

B. Both EDG's will require a manual start. When started, the output breakers will require a MANUAL closure.

C. Both EDG's are operating with the output breakers OPEN.

D. Both EDG's are operating with the output breakers CLOSED.

Proposed Answer: C

Explanation (Optional):

A. EDG's will auto start, output breakers require a manual closure due to NORMAL/ISOLATE switches in ISOLATE
B. EDG's will auto start
C. Correct
D. Output breakers will NOT auto close.

Technical Reference(s): 1-ONP-100.02 (Attach if not previously provided)

Proposed references to be provided to applicants during examination: _____

Written Examination
Question Worksheet

Learning Objective: _____ (As available)

Question Source: Bank # _____

Modified Bank # _____ (Note changes or attach parent)

New x

Question History: Last NRC Exam _____

Question Cognitive Level: Memory or Fundamental Knowledge x

Comprehension or Analysis _____

10 CFR Part 55 Content: 55.41 7

55.43 _____

Comments:

R023



## APPENDIX G
## LOSS OF OFFSITE POWER WITH NORMAL / ISOLATE SWITCHES IN ISOLATE
(Page 1 of 2)

INITIAL

**NOTE**

Supplemental portable lighting may be obtained for component manipulations outside of the Control Room.

- Dedicated portable lanterns are available at the following locations:
  - Storage Locker EPLS-1: Walkway to Containment Personnel Hatch
  - Storage Locker EPLS-2: RAB Hallway West End (-0.5' elevation)
  - Storage Locker EPLS-3: RAB M.G. Set Room (19.5' elevation)
  - Storage Locker EPLS-4: RAB HVAC Room Access Hallway (43.0' elevation)
  - Storage Locker EPLS-5: Control Room Office
- 1A Emergency Diesel Generator will NOT be available with a fire in the Cable Spreading Room.

**1.** If a Loss of Offsite Power occurs while the Normal/Isolate switches are in ISOLATE, Then LOCALLY ENSURE EDG is operating 4160V and 60 hertz. (D/G Control Panels):

- 1B Diesel Generator _____
- 1A Diesel Generator _____

**2.** If the EDG is NOT operating, Then PERFORM the following:

**A.** INVESTIGATE status of local alarm panel. _____

**B.** If there are no alarms, Then VERIFY the overspeed trip lever has NOT tripped. _____

**CAUTION**

If auto-start signal is present and the lockout relay is reset, the EDG will automatically start.

**C.** ENSURE the lockout relay is RESET. _____

**APPENDIX G**
**LOSS OF OFFSITE POWER WITH NORMAL / ISOLATE SWITCHES IN ISOLATE**
(Page 2 of 2)

**2.** (continued) INITIAL

**D.** If the EDG does NOT start, Then PLACE the engine start Control switch to START. _____

**E.** When the EDG reaches 900 rpm, Then ADJUST the following controls as indicated

- Voltage Control to obtain 4160V _____
- Engine Speed Control to obtain 60 hertz _____

**3.** If 1A EDG is operating, Then PERFORM the following at 1A3 4160V switchgear:

**A.** OPEN **ALL** 1A3 4.16KV switchgear breakers. _____

**B.** CLOSE Bkr 1-20211, Emergency Diesel Generator 1A. _____

**C.** CLOSE 1A3 4.16KV breakers as directed by the SM/**US**. _____

**4.** If 1B EDG is operating, Then PERFORM the following at 1B3 4160V switchgear:

**A.** OPEN **ALL** 1B3 4.16KV switchgear breakers. _____

**B.** CLOSE Bkr 1-20401, Diesel Generator (D/G) 1B. _____

**C.** CLOSE 1B3 4.16KV breakers as directed by the SM/**US**. _____

**CAUTION**
3.5 mw must NOT be exceeded on either EDG.

**5.** LOCALLY MONITOR EDG for proper operation, i.e. voltage and mw. (D/G control panel) _____

**6.** Periodically CHECK fuel oil levels in the diesel generator day tanks. _____

**7.** When adequate margin exists on the diesel generator, Then, if desired by the **US**, START a Spent Fuel Pool Cooling pump. _____

**8.** When offsite power is available, Then DIRECT the Electrical Department to perform fire damage inspections prior to restoring offsite power. _____

**END OF APPENDIX G**

Written Examination
Question Worksheet

| Examination Outline Cross-reference: | Level | RO | SRO |
|---|---|---|---|
| | Tier # | 1 | |
| | Group # | 2 | |
| | K/A # | AK3.06 | |
| | Importance Rating | 3.2 | |

076 / High Reactor Coolant Activity / 5 Knowledge of the reasons for the following as they apply to the High Reactor Coolant Activity: Actions contained in EOP for high reactor coolant activity.

Proposed Question: RO 24

Unit 1 is at 100% power. Increased RCS activity has warranted entry into 1-ONP-01.06, "Excessive RCS Activity". Dose Equivalent (DEQ) Iodine 131 has stabilized at .05 uCi/gram and a plant shutdown is not required. Which one of the following is an action required by the off-normal and the reason for the action?

A. Isolate letdown to prevent high gamma radiation areas in the RCA.

B. Maximize letdown to allow better clean-up of the RCS.

C. Divert letdown to the hold-up tanks to capture contaminated RCS water.

D. Vent the VCT to the Waste Gas Decay tanks to prevent iodine airborne activity in the RCA.

Proposed Answer: B

Explanation (Optional):

A. Radiation would increase in area of letdown lines in RCA, not procedurally addressed to isolate letdown
B. Correct
C. At .1 uCi/gram, flow is diverted to Flash Tank, not Holdup Tanks
D. HP required to survey in the area of the VCT, no instructions to vent.

Technical Reference(s): 1-ONP-01.06 (Attach if not previously provided)

Proposed references to be provided to applicants during examination: _____

Learning Objective: _____ (As available)

Question Source: Bank # _____
Modified Bank # _____ (Note changes or attach parent)
New x

Question History: Last NRC Exam _____

Question Cognitive Level: Memory or Fundamental Knowledge _____
Comprehension or Analysis x

10 CFR Part 55 Content: 55.41 5, 10
55.43 _____

Comments:

**6.0** OPERATOR ACTIONS

**6.1** Excessive RCS Activity

**INSTRUCTIONS** **CONTINGENCY ACTIONS**

**NOTE**

- ¶1 The decision NOT to derate a unit with a steady state DEQ of 0.75 µCi/gm or an upward trend of DEQ approaching 0.75 µCi/gm (unless an identified transient or atypical plant condition temporarily results in this trend), must come from the Site Vice President. The Site Vice President will factor in time to next outage, stability of FPL generation / distribution system and explanation for increasing trends.

- This procedure may contain steps that could adversely affect reactivity. ENSURE that proper consideration and appropriate briefings occur prior to performance of steps that could challenge reactivity.

**1.** NOTIFY the following of the plant condition:

- SM
- Chemistry Supervisor

**2.** NOTIFY Chemistry to sample RCS gross activity.

**3.** NOTIFY Health Physics to survey the VCT for a significant increase in radiation levels.

**4.** When RCS gross activity sample results are obtained, Then COMPARE to previous average RCS sample results.

/R3

**6.1** Excessive RCS Activity (continued)

| INSTRUCTIONS | CONTINGENCY ACTIONS |
| --- | --- |
| **6.** (continued) | |
| **D.** With letdown flow to the Flash Tank, Chemistry shall be notified to provide influent and effluent noble gas sampling of the Flash Tank. The sample points for Chemistry sampling are located at valves V6120 and V6136. | |
| **E.** <u>If</u> failure of a radiation monitor is suspected, <u>Then</u> NOTIFY I&C of the failed component. | |
| **F.** VERIFY exit conditions are met. | **F.1** CONTINUE with Step 7.A. |
| **7.** <u>If</u> current RCS activity is significantly increased, <u>Then</u> PERFORM the following: | |
| **A.** RAISE letdown flow to maximum as follows: | |
| **1.** START standby charging pumps. | |
| **2.** ADJUST HIC-1110, Letdown Flow Control, to obtain desired flow. | |
| **B.** NOTIFY Chemistry to perform the following: | |
| **1.** §1 PERFORM actions of COP-06.07, High Activity in Reactor Coolant System, to determine if a fuel element defect exists. | |
| **2.** CHECK the decontamination factor (D/F) of the in service Letdown Ion Exchanger. | |

**6.1** Excessive RCS Activity (continued)

| INSTRUCTIONS | CONTINGENCY ACTIONS |
| --- | --- |
| **5.** ¶1 COMMENCE a Plant Shutdown / Load Reduction as directed by the US / SM if **EITHER** of the following criteria is met:<br>• Steady State DEQ of 0.75 µCi/gm<br>• Upward trend of DEQ approaching the above limit (unless an identified transient or atypical plant condition temporarily results in this trend). | |
| **6.** <u>If</u> current RCS activity is NOT significantly increased, <u>Then</u> PERFORM the following: | |
| **A.** MONITOR the following parameters for indications of steady or lowering RCS activity:<br>• Channel #40, Letdown Gross<br>• Channel #41, Ltdn Iodine<br>• RR-2202, Process Radiation, Gross Coolant Activity<br>• RR-2202, Process Radiation, Selected Isotope | **A.1** CONTINUE with Step 7.A. |
| **B.** Whenever RCS Activity is greater than 0.1 uCi/gram DEQ I-131, as determined by Chemistry, the Flash Tank Divert valve V6307 shall be positioned to divert flow to the Flash Tank. | |
| **C.** If the RCS Activity is less than or equal to 0.1 uCi/gram DEQ I-131, but it is believed that some fuel failure has occurred, use of the Flash Tank should be considered. | |

Written Examination
Question Worksheet

| Examination Outline Cross-reference: | Level | RO | SRO |
|---|---|---|---|
| | Tier # | 1 | |
| | Group # | 2 | |
| | K/A # | Ak2.2 | |
| | Importance Rating | 3.4 | |

CE/A13 / Natural Circulation / 4 Knowledge of the interrelations between the (Natural Circulation Operations) and the following: Facility*s heat removal systems, including primary coolant, emergency coolant, the decay heat removal systems, and relations between the proper operation of these systems to the operation of the facility.

Proposed Question: RO 25

A loss of offsite power has occurred on Unit 1. All equipment operated as designed. It is desired to perform a controlled cooldown to 350 °F IAW 1-0120039, "Natural Circulation Cooldown." Which one of the following local (field) operator actions must be performed to facilitate the cooldown from the Control Room?

A. Reset Non-Essential Load Breakers.

B. Perform EOP-99, Appendix X, "Secondary Plant Post Trip Actions."

C. Perform EOP-99, appendix H, "Operation of the 1A and 1B Instrument Air Compressors."

D. Crosstie Unit 1 CST with Unit 2 CST.

Proposed Answer: C

Explanation (Optional):

A. Non-essential load breakers are required to restore letdown, not needed for cooldown
B. Appendix X is used to stabilize secondary plant, would be needed more for cooldown if LOOP was not present
C. Correct (ADV's must be locally operated if IA is not restored, controlled cooldown not possible)
D. Unit 2 CST is sized to hold 125,000 for Unit 1 if needed, not in this case

Technical Reference(s): 1-EOP-09, 1-0120039 (Attach if not previously provided)

Proposed references to be provided to applicants during examination: _____

Learning Objective: PSL OPS SYS 304-9 (As available)

Question Source: Bank # _____
Modified Bank # _____ (Note changes or attach parent)
New x

Question History: Last NRC Exam _____

Question Cognitive Level: Memory or Fundamental Knowledge _____
Comprehension or Analysis x

10 CFR Part 55 Content: 55.41 7

Written Examination
Question Worksheet

55.43 _____

Comments:

**4.0 OPERATOR ACTIONS** (continued)

| INSTRUCTIONS | CONTINGENCY ACTIONS |
|---|---|
| * **5. Ensure EDG Loading** | |
| If a LOOP has occurred, Then ENSURE the following for **EACH** Vital 4.16 KV Bus: | |
| **A.** EDG has STARTED. | **A.1** Locally START the EDG. **REFER TO** Appendix C, Diesel Generator Local Start. |
| **B.** EDG Output Breaker is CLOSED. | |
| **C.** LOOP Loads are ENERGIZED. | **C.1** Manually ALIGN EDG loads. **REFER TO** Table 8, Emergency Diesel Generator Loading (LOOP). |
| * **6. Restore Instrument Air** | |
| If a LOOP has occurred, Then PERFORM **BOTH** of the following: | |
| **A.** ENSURE 1AB 480V Load Center is aligned to an energized bus. | |
| **B.** DISPATCH an operator to restore Instrument Air. **REFER TO** Appendix H, Operation of the 1A and 1B Instrument Air Compressors. | |

**4.0 OPERATOR ACTIONS** (continued)

| INSTRUCTIONS | CONTINGENCY ACTIONS |
|---|---|
| * **8. Depressurize the RCS** | |
| **A.** COMMENCE depressurizing the RCS to between 1800 and 1850 psia. | |
| **B.** MAINTAIN pressurizer level between 10 and 68%. | |
| * **9. Protect Main Condenser** | |
| **A.** If a LOOP has occurred, Then PERFORM **BOTH** of the following to protect the Secondary Plant: | |
| **1.** ENSURE MSIVs are CLOSED. | |
| **2.** ENSURE SGBD is ISOLATED. | |
| **B.** STABILIZE the Secondary Plant. **REFER TO** Appendix X, Secondary Plant Post Trip Actions, Section 2. | |
| * **10. Stabilize RCS Temperature** | |
| ENSURE RCS $T_{COLD}$ is less than 535°F and controlled by operation of **ANY** of the following: | **10.1** If RCS $T_{COLD}$ is greater than 535°F, Then VERIFY MSSVs are controlling RCS temperature. |
| • SBCS | **10.2** Locally operate ADVs. **REFER TO** Appendix U, Local Operation of Unit 1 ADVs. |
| • ADVs | **10.3** If ADVs are unavailable, Then use alternate steaming paths. **REFER TO** Table 12, Alternate S/G Heat Removal Paths. |

**4.0 OPERATOR ACTIONS** (continued)

| INSTRUCTIONS | CONTINGENCY ACTIONS |
|---|---|

**NOTE**

**ALL** of the following are necessary for restoration of Letdown:

- Instrument Air
- Non-essential sections of MCCs 1A6 and 1B6 energized
- SIAS and CIAS reset

[*] **19. Restore Letdown**

If Letdown is ISOLATED,
and is needed or desired,
Then PERFORM **BOTH** of the following:

**A.** DIRECT HP to monitor the VCT hallway for rising radiation levels.

**B.** RESTORE Letdown. **REFER TO** 1-ONP-02.03, Charging and Letdown.

**B.1** If SIAS has isolated Letdown, Then **REFER TO** Appendix P, Restoration of Components Actuated by ESFAS.

[*] **20. RCP Restart**

If RCP restart is desired,
and **BOTH** of the following conditions are met,

- Single phase natural circulation flow has existed in the RCS for at least 20 minutes
- RCP restart criteria are met. **REFER TO** 1-NOP-01.02, Reactor Coolant Pump Operation

Then START **ONE** RCP in **EACH** loop.

**3/4.7 PLANT SYSTEMS** (continued)

**BASES** (continued)

**3/4.7.1 TURBINE CYCLE** (continued)

106.5 = Power Level-High Trip Setpoint for two loop operation

X = Total relieving capacity of all safety valves per steam line in lbs/hour ($6.192 \times 10^6$ lbs/hr.)

Y = Maximum relieving capacity of any one safety valve in lbs/hour ($7.74 \times 10^5$ lbs/hr.) /R1A

Surveillance Requirement 4.7.1.1 verifies the OPERABILITY of the MSSVs by the verification of each MSSV lift setpoint in accordance with the Inservice Testing Program. The MSSV setpoints are 1000 psia +1/-3% (4 valves each header) and 1040 psia +1/-3% (4 valves each header) for OPERABILITY; however, the valves are reset to 1000 psia +/-1% and 1040 psia +/- 1%, respectively, during the Surveillance to allow for drift. The LCO is expressed in units of psig for consistency with implementing procedures.

The provisions of Specification 3.0.4 do not apply. This allows entry into and operation in MODE 3 prior to performing the Surveillance Requirements so that the MSSVs may be tested under hot conditions.

**3/4.7.1.2 AUXILIARY FEEDWATER PUMPS**

The OPERABILITY of the auxiliary feedwater pumps ensures that the Reactor Coolant System can be cooled down to less than 325°F from normal operating conditions in the event of a total loss of off-site power.

Any two of the three auxiliary feedwater pumps have the required capacity to provide sufficient feedwater flow to remove reactor decay heat and reduce the RCS temperature to 325°F where the shutdown cooling system may be placed into operation for continued cooldown.

**3/4.7.1.3 CONDENSATE STORAGE TANKS**

The OPERABILITY of the condensate storage tank with the minimum water volume ensures that sufficient water is available for cooldown of the Reactor Coolant System to less than 325°F in the event of a total loss of off-site power. The minimum water volume is sufficient to maintain the RCS at HOT STANDBY conditions for 8 hours with steam discharge to atmosphere.

**3/4.7 PLANT SYSTEMS** (continued)

**BASES** (continued)

**3/4.7.1 TURBINE CYCLE** (continued)

**3/4.7.1.3 CONDENSATE STORAGE TANKS**

The OPERABILITY of the condensate storage tank with the minimum water volume ensures that sufficient water is available to maintain the Unit 2 RCS at HOT STANDBY conditions for 4 hours followed by an orderly cooldown to the shutdown cooling entry temperature (350°F). The contained water volume limit includes an allowance for water not usable because of tank discharge line location or other physical characteristics.

The actual water requirements are 149,600 gallons for Unit 2 and 125,000 gallons for Unit 1. Included in the required volumes of water are the tank unusable volume of 9400 gallons and a conservative allowance for instrument error of 21,400 gallons.

**3/4.7.1.4 ACTIVITY**

The limitations on secondary system specific activity ensure that the resultant offsite radiation dose will be limited to 10 CFR Part 100 limits in the event of a steam line rupture. The dose also includes the effects of a coincident 1.0 gpm primary to secondary tube leak in the steam generator of the affected steam line and a concurrent loss of offsite electrical power. These values are consistent with the assumptions used in the safety analyses. /R3

**3/4.7.1.5 MAIN STEAM LINE ISOLATION VALVES**

The OPERABILITY of the main steam line isolation valves ensures that no more than one steam generator will blow down in the event of a steam line rupture. This restriction is required to (1) minimize the positive reactivity effects of the Reactor Coolant System cooldown associated with the blowdown, and (2) limit the pressure rise within containment in the event the steam line rupture occurs within containment. The OPERABILITY of the main steam isolation valves within the closure times of the Surveillance Requirements is consistent with the assumptions used in the safety analyses.

The specified 6.75 second full closure time represents the addition of the maximum allowable instrument response time of 1.15 seconds and the maximum allowable valve stroke time of 5.6 seconds. These maximum allowable values should not be exceeded because they represent the design basis values for the plant.

Written Examination
Question Worksheet

| Examination Outline Cross-reference: | Level | RO | SRO |
|---|---|---|---|
| | Tier # | 1 | |
| | Group # | 2 | |
| | K/A # | AK1.3 | |
| | Importance Rating | 3.2 | |

Knowledge of the operational implications of the following concepts as they apply to the (Excess RCS Leakage): Annunciators and conditions indicating signals and remedial action associated with the (Excess RCS Leakage)

Proposed Question: RO 26

The following conditions exist with both Units at 100% power:

- Unit 1 has received: Annunciator H-6, "REACTOR HEAD SEAL PRESS LOW" PI-1118 indicates 1084 psig
- Unit 2 has received: Annunciator H-15, "REACTOR HEAD SEAL PRESS HIGH".PI-1118 indicates 1900 psig.

Which of the following actions should be performed?

A. Unit 1 should enter 1-0120031 'Excessive Reactor Coolant System Leakage'.

B. Unit 2 should enter 2-0120031 'Excessive Reactor Coolant System Leakage'

C. Both Units should enter 'Excessive Reactor Coolant System leakage'

D. Both Units should enter ONP-22.01 'Rapid Downpower'

Proposed Answer: A

Explanation (Optional):

A. Correct (first seal on Unit 1 is failed, annunciator changed on Unit 1 only) Annunciator response requires entry in to 1-0120031 if low pressure.
B. Would indicate leakage past the first seal, not RCS leak
C. Not applicable for Unit 2
D. Not applicable for both Units

Technical Reference(s): 1-ARP-01-H6 Annunciator Response Procedure (Attach if not previously provided)

Proposed references to be provided to applicants during examination: _____

Learning Objective: _____ (As available)

Question Source: Bank # _____

Modified Bank # _____ (Note changes or attach parent)

New X

Question History: Last NRC Exam _____

Written Examination
Question Worksheet

| | | |
|---|---|---|
| Question Cognitive Level: | Memory or Fundamental Knowledge | X |
| | Comprehension or Analysis | |
| 10 CFR Part 55 Content: | 55.41 | 10 |
| | 55.43 | |

Comments:

Alarm H-6 unique to Unit 1 due to RX head inner seal leak after recent refueling outage.

## ANNUNCIATOR PANEL H

| | | | | | |
|---|---|---|---|---|---|
| 1 | 2 | 3 | 4 | 5 | 6 |
| 7 | 8 | 9 | 10 | 11 | 12 |
| 13 | 14 | 15 | 16 | 17 | 18 |
| 19 | 20 | 21 | 22 | 23 | 24 |
| 25 | 26 | 27 | 28 | 29 | 30 |
| 31 | 32 | 33 | 34 | 35 | 36 |

**REACTOR HEAD SEAL PRESS LOW**

**H-6**

**DEVICE:**
PS-1118/141

**LOCATION:**
RCB/27/N-34/E-38

**SETPOINT:**
<1975 psia

**ALARM CONFIRMATION:**
1. Local indication

**OPERATOR ACTIONS:**
1. If accessible, Then PERFORM the following:
   A. Check PI-1118, Rx Vessel Head Gasket Leak Press Via Video Feed to the Unit 1 Control Room, if video feed is not available within 24 hours, DISPATCH operator to check PI-1118, Rx Vessel Head Gasket Leak Press.
   B. If PI-1118 indicates less than 1975 psia, Then PERFORM the following:
      1. REFER to 1-0120031, Excessive Reactor Coolant System Leakage.
      2. DETERMINE seal leakage by measuring the leak rate from the pressure switch line.
   C. If the annunciator re-alarms, consult Engineering to determine if Step 1.B.2 should be performed.

**CAUSES:** Low pressure on this line indicates leakage on the Reactor vessel head inner seal.

**REFERENCES:**
1. CWD 8770-B-327 sheet 141
2. P&ID 8770-G-078 sheet 110B
3. TEDB

/R2

| REVISION: | PROCEDURE TITLE: | PANEL: |
|---|---|---|
| 0 | ANNUNCIATOR RESPONSE PROCEDURE | H |
| PROCEDURE NO: | | WINDOW: |
| 2-ARP-01-H15 | ST. LUCIE UNIT 2 | 15 |

**ANNUNCIATOR PANEL H**

| | | | | | | | |
|---|---|---|---|---|---|---|---|
| 1 | 2 | 3 | 4 | 5 | 6 | 7 | 8 |
| 9 | 10 | 11 | 12 | 13 | 14 | 15 | 16 |
| 17 | 18 | 19 | 20 | 21 | 22 | 23 | 24 |
| 25 | 26 | 27 | 28 | 29 | 30 | 31 | 32 |
| 33 | 34 | 35 | 36 | 37 | 38 | 39 | 40 |
| 41 | 42 | 43 | 44 | 45 | 46 | 47 | 48 |

**REACTOR HEAD SEAL PRESS HIGH**

**R** **H-15**

**DEVICE:**
PS-1118/141

**LOCATION:**
RCB/18/N-38/E-40

**SETPOINT:**
1000 psig

**ALARM CONFIRMATION:**
1. Local Indication

**OPERATOR ACTIONS:**
1. If accessible, Then PERFORM the following:
   A. DISPATCH operator to check PI-1118, Rx Vessel Head Gasket Leak Press.
   B. If PI-1118 indicates greater than 1000 psig, Then DETERMINE seal leakage by measuring leak rate from the pressure switch line.

**CAUSES:** High pressure in this line indicates leakage on the Reactor vessel head inner seal.

**REFERENCES**
1. CWD 2998-B-327 sheet 141
2. P&ID 2998-G-078 sheet 110
3. TEDB

| REVISION: | PROCEDURE TITLE: | PANEL: |
|---|---|---|
| 0 | ANNUNCIATOR RESPONSE PROCEDURE | H |
| PROCEDURE NO: | | WINDOW: |
| 2-ARP-01-H11 | ST. LUCIE UNIT 2 | 11 |

## ANNUNCIATOR PANEL H

| | | | | | | | |
|---|---|---|---|---|---|---|---|
| 1 | 2 | 3 | 4 | 5 | 6 | 7 | 8 |
| 9 | 10 | 11 | 12 | 13 | 14 | 15 | 16 |
| 17 | 18 | 19 | 20 | 21 | 22 | 23 | 24 |
| 25 | 26 | 27 | 28 | 29 | 30 | 31 | 32 |
| 33 | 34 | 35 | 36 | 37 | 38 | 39 | 40 |
| 41 | 42 | 43 | 44 | 45 | 46 | 47 | 48 |

**PZR SAFETY**
**V1200**
**DISCH TEMP**
**HIGH**
**R** **H-11**

**DEVICE:**
TIA-1107/134

**LOCATION:**
RAB/RTGB-203

**SETPOINT:**
280°F

**ALARM CONFIRMATION:**
1. TIA-1107, Safety Valve
2. TIA-1116, Quench Tank Temperature
3. LIA-1116, Quench Tank Level
4. PIA-1116, Quench Tank Pressure
5. Safety/Relief Valve Acoustic Monitors

**OPERATOR ACTIONS:**
**1. GO TO ONOP 2-0120036, Pressurizer Relief/Safety Valve.**

**CAUSES:** V1200, PZR Safety Relief, has lifted or has a seat leak causing the tailpipe temperature to increase.

**REFERENCES**
1. CWD 2998-B-327 sheet 134
2. P&ID 2998-G-078 sheet 109
3. TEDB

| REVISION: | PROCEDURE TITLE: | PANEL: |
|---|---|---|
| 2 | ANNUNCIATOR RESPONSE PROCEDURE | N |
| PROCEDURE NO: | | WINDOW: |
| 1-ARP-01-N29 | ST. LUCIE UNIT 1 | 29 |

## ANNUNCIATOR PANEL N

| | | | | | | | |
|---|---|---|---|---|---|---|---|
| 1 | 2 | 3 | 4 | 5 | 6 | 7 | 8 |
| 9 | 10 | 11 | 12 | 13 | 14 | 15 | 16 |
| 17 | 18 | 19 | 20 | 21 | 22 | 23 | 24 |
| 25 | 26 | 27 | 28 | 29 | 30 | 31 | 32 |
| 33 | 34 | 35 | 36 | 37 | 38 | 39 | 40 |
| 41 | 42 | 43 | 44 | 45 | 46 | 47 | 48 |

**RX CAVITY SUMP LEVEL HIGH**

**N-29**

**DEVICE:**
LS-06-2

**LOCATION:**
RCB/2/N-5/W-20

**SETPOINT:**
-5 ft 4 in. rising (high)

**ALARM CONFIRMATION:**
1. LI-07-6, Containment Sump Level – 18.6 inches (RTGB 105)
2. LIS-07-14A, Containment Sump Level - Narrow Range, -5 ft 4 in. and rising on CRAC Panel.
3. LRS-07-14A, Containment Sump Level - Narrow Range, indicates-5 ft 4 in. and rising on CRAC Panel.

**OPERATOR ACTIONS:**
1. Notify SNPO of intent to pump Rx Cavity Sump.
2. Have SNPO verify that Equipment Drain Tank 1A has available capacity for expected water transfer.
3. OPEN LCV-07-11B, RX Cavity Sump Isol.
4. OPEN LCV-07-11A, RX Cavity Sump Isol.
5. DETERMINE if Reactor Cavity Sump Pumps are running by dropping sump level indication.
6. When the cavity sump pumps have stopped and the level is in the normal range, Then CLOSE the following levels:
   A. LCV-07-11A
   B. LCV-07-11B
7. If Containment Sump Level does NOT drop, Then DISPATCH an operator to VERIFY the following pump breakers are CLOSED:
   - Bkr 1-41231, Reactor Cavity Sump Pump 1A, on MCC 1A5.
   - Bkr 1-42028, Reactor Cavity Sump Pump 1B, on MCC 1B5.
8. If the breakers are NOT TRIPPED, Then PERFORM the following:
   A. PRESS the Thermal Overload RESET button or DIRECT EM to reset the Thermal Overload.
   B. ENSURE the breakers are CLOSED.
   C. If the breaker is CLOSED and indicating lights are NOT LIT, Then ENSURE breaker control power fuses are checked and replaced as necessary.
9. If the breaker is TRIPPED or the thermal overload repeatedly actuates, Then CONTACT EM for troubleshooting and repairs.

**CAUSES:** This annunciator is caused by Reactor Cavity Sump level reaching -5 ft 4 in. and rising. Reactor Cavity Sump Pumps automatically start at the high level alarm when both Cntmt Isolation Valves are full open.

**REFERENCES**
1. CWD 8770-B-327 sheets 574 and 590
2. P&ID 8770-G-088 sheet 2
3. TEDB

/R2 /R2

Written Examination
Question Worksheet

| Examination Outline Cross-reference: | Level | RO | SRO |
|---|---|---|---|
| | Tier # | 1 | |
| | Group # | 2 | |
| | K/A # | EK1.1 | |
| | Importance Rating | 3.2 | |

CE/E09 / Functional Recovery Knowledge of the operational implications of the following concepts as they apply to the (Functional Recovery): Normal, abnormal and emergency operating procedures associated with Functional Recovery

Proposed Question: RO 27

Unit 2 has a Loss of Offsite Power with a Steam Generator tube rupture. During the downpower, SGBD and SJAE radiation monitors were in alarm. Due to AFW problems the crew has entered 2-EOP-15 'Functional Recovery' with the following conditions:

- RCS Thot 520°F
- RCS pressure 1650 psia
- Local surveys indicate secondary activity
- CIAS monitors indicate no alarms or increasing trends

Which of the following is the status of Containment Isolation Safety function?
Containment Isolation Safety function:

A. is currently met due to CIAS actuated.

B. is currently met due to CIAS monitors indicate no alarms or increasing trends.

C. will be met when offsite power restored and the faulted S/G is no longer steaming by ADV's.

D. will be met when the faulted Steam Generator is isolated per EOP-99, Appendix R.

Proposed Answer: D

Explanation (Optional):
A. In addition to CIAS monitors, faulted S/G has to be isolated
B. In addition to CIAS monitors, faulted S/G has to be isolated
C. Steaming the faulted S/G will end when it is isolated
D. Correct

Technical Reference(s): 2-EOP-15 (Attach if not previously provided)

Proposed references to be provided to applicants during examination: _____

Learning Objective: 0702828-06 (As available)

Question Source: Bank # 2025

Modified Bank # _____ (Note changes or attach parent)

Written Examination
Question Worksheet

| | | |
|---|---|---|
| Question History: | New | _____ |
| | Last NRC Exam | _____ |
| Question Cognitive Level: | Memory or Fundamental Knowledge | x |
| | Comprehension or Analysis | _____ |
| 10 CFR Part 55 Content: | 55.41 | 8, 10 |
| | 55.43 | _____ |

Comments:

**4.7 CONTAINMENT ISOLATION - CI-1** (continued)

**Success Path 1 – Automatic/Manual Isolation** (continued)

## INSTRUCTIONS

[*] **4. Verify CI-1 Satisfied**

VERIFY CI-1 (Automatic/Manual Isolation) is satisfied by **ANY** of the following conditions being satisfied:

Condition 1:

**A.** If **ANY** secondary plant activity monitor alarms
or has an unexplained rise,
Then the **MOST** affected S/G is ISOLATED.

**B.** Containment pressure is less than 3.5 psig.

**C.** NO containment area
or atmospheric radiation monitor alarms
or unexplained rise.

**D.** If a SGTR exists,
Then the isolated S/G pressure is less than 915 psig (930 psia)
and NOT steaming via ADV.

Condition 2:

**A.** If **ANY** secondary plant activity monitor alarms
or has an unexplained rise,
Then the **MOST** affected S/G is ISOLATED.

**B.** CIAS is ACTUATED.

## CONTINGENCY ACTIONS

**4.1 If Containment Isolation is still in jeopardy,**
**Then PURSUE Containment Isolation**
**and other jeopardized safety functions simultaneously.**

**4.2** CONTINUE efforts to establish Containment Isolation by evaluating further actions based on **ALL** of the following:

- The urgency of other jeopardized safety functions
- The risk to plant personnel and the public of leaving certain containment penetrations unisolated
- The feasibility of isolating containment penetration(s) by alternate means

# Single Question Report

| | | | | |
|---|---|---|---|---|
| **QID#:** 2025 | **Objective:** 0702828-06 | | **System:** EOP-15 | |
| **Rev:** 0 | **Cog Level:** 2 | **KA #** 2.4.21 | **RO** 3.7 | **SRO** 4.3 |

Unit 2 has a Loss of Offsite Power with a Steam Generator tube rupture. During the downpower, blowdown and SJAE radiation monitors were in alarm. Due to AFW problems the crew has entered 2-EOP-15 'Functional Recovery' with the following conditions:

- RCS Thot 520°F
- RCS pressure 1650 psia
- Local surveys indicate secondary activity
- CIAS monitors indicate no alarms or increasing trends

Which of the following is the status of Containment Isolation Safety function?
Containment Isolation Safety function:

A. is currently met due to CIAS actuated

B. is currently met due to CIAS monitors indicate no alarms or increasing trends

C. will be met when offsite power restored and the faulted S/G is no longer steaming by ADV's.

D. will be met when the faulted Steam Generator is isolated per Appendix R from EOP-99.

**Reasons the choices are right or wrong.** **Correct answer is D.**

A. faulted S/G must be isolated (<515°F Thot)

B. faulted S/G must be isolated (<515°F Thot)

C. faulted S/G must be isolated (<515°F Thot)

D. , faulted S/G required to be isolated to meet safety function.,

**Source Ref:** 2-EOP-15 'Functional Recovery' 0702828-06 Function

**Open Ref:**

**Revision Notes:**

## Question Use History

HLC-16 PreNRC Quiz 3, 0717036, 8/5/2004
HLC-16 PreAudit Quiz 7 (HLC-15 NRC), 0717018, 6/1/2004

HLC-15 RO NRC 2001, 0717003, 1/1/2001

Written Examination
Question Worksheet

| Examination Outline Cross-reference: | Level | RO | SRO |
|---|---|---|---|
| | Tier # | 2 | |
| | Group # | 1 | |
| | K/A # | K1.03 | |
| | Importance Rating | 3.3 | |

003 Reactor Coolant Pump Knowledge of the physical connections and/or cause-effect relationships between the RCPS and the following systems: RCP seal system.

Proposed Question: RO 28

The 2A1 RCP has a failed lower and middle seal. Due to a failure in the upper seal, controlled bleedoff flow for the 2A1 RCP spiked to 12 gpm. Which of the following describes the status of total RCP controlled bleedoff flow? (Assume all other pumps normal.)

Total (all pumps) controlled bleedoff flow is:

A. 15 gpm and is being directed to the quench tank.

B. 3 gpm and is being directed to the volume control tank.

C. 3 gpm and is being directed to the quench tank.

D. 13 gpm and is being directed to the volume control tank.

Proposed Answer: B

Explanation (Optional):

A. 15 gallons would be 12 gpm from the failed seals and 1 gpm from each pump, incorrect flow path
B. Correct (at 10 gpm, 2A1 check valve would stop flow only from 2A1)
C. Correct flow, incorrect path
D. 13 gpm would be 10 gpm from 2A1, 1 gpm from each pump, correct flow path

Technical Reference(s): 0711202 (Attach if not previously provided)

Proposed references to be provided to applicants during examination: _____

Learning Objective: 0702202-7 (As available)

Question Source: Bank # 2585

Modified Bank # _____ (Note changes or attach parent)

New _____

Question History: Last NRC Exam _____

Question Cognitive Level: Memory or Fundamental Knowledge _____

Comprehension or Analysis x

10 CFR Part 55 Content: 55.41 2, 9

55.43 _____

Comments:

$$CBO \cdot Two \cdot Failed \cdot Seals \cong 1.0 \cdot gpm\sqrt{\frac{\Delta P \cdot Per \cdot Intact \cdot Seal}{\Delta P \cdot Normal}} \cong 1.0 \cdot gpm\sqrt{\frac{2190}{730}} \cong 1.7 gpm$$

The UFSAR provides estimated total seal assembly leakage rates that are slightly lower than those calculated above. The key point is that CBO flow does not increase significantly with a seal failure, but prompt action and close monitoring is warranted due to increased probability of failures. In the event of gross seal failure, maximum CBO flow for each pump is limited by the flow limiting check valves. At a CBO flow rate of 10 gpm, the check valve closes thus stopping CBO flow from the RCP. It is important to note that if one of these check valves stop CBO flow, within 30 minutes, the reactor must be tripped (if operating) and the RCP must be stopped to ensure the vapor seal can perform its design function. If desired, the expected CBO flow with one or more failed seals can be estimated for any RCS pressure by combining the results from these calculations.

## Controlled Bleedoff System Operation

CBO flow from each RCP seal cartridge's bleedoff cavity passes through an excess flow check valve before combining with the CBO flow from the other RCPs. Refer to Figure 9. The combined flow then penetrates containment through containment isolation valves I-SE-01-1 [V2524] (RCP BLEEDOFF) and V2505 (RCP BLEEDOFF) to the VCT. These valves close on a Containment Isolation Actuation Signal (CIAS) and fail closed on loss of power from the A and B Trains of the Safety-Related 125V DC System respectively. The Unit 1 valve SE-01-1 is a fail closed SOV. The comparable Unit 2 valve [V2524] is a fail closed AOV. Both units' V2505 valves are failed closed AOVs. Throttle valve V2198 is used to adjust CBO flow. This valve can also be closed to isolate CBO flow if the containment isolation valves fail to close due to an Appendix R fire. Refer to Figure 9. Each containment isolation valve has a three-position control switch and indicating lights on RTGB-105 [205]. The control switch positions are:

- **CLOSE** – maintained contact switch position that removes power from the solenoid causing the valve to close.

- **OPEN** – opens the valve by energizing the solenoid

# Single Question Report

**QID#:** 2585 **Objective:** 0702301-08 **System:** CD/FW
**Rev:** 0 **Cog Level:** 1 **KA #** 078.K3.02 **RO** 3.4 **SRO** 3.6

Unit 2 has just been manually tripped from 30% power due to a total loss of Instrument Air System pressure.

What is the status of the MFIVs?

A. Failed CLOSED due to loss of air and is now inoperable in all modes.

B. Failed as is OPEN but all can be fast closed by a MSIS signal.

C. Failed as is OPEN but all can be slow closed from their RTGB control switches.

D. Failed as is OPEN but can be locally closed using the Appendix R control switches.

**Reasons the choices are right or wrong.** **Correct answer is B.**

A.

B.

C.

D.

**Source Ref:**

**Open Ref:**

**Revision Notes:** CAR 9/06

## Question Use History

HLC17 SRO IPT1 Exam, 0720240,
HLC17 SRO IPT1 Exam, 0,

Written Examination
Question Worksheet

| Examination Outline Cross-reference: | Level | RO | SRO |
|---|---|---|---|
| | Tier # | 2 | |
| | Group # | 1 | |
| | K/A # | K6.14 | |
| | Importance Rating | 2.6 | |

003 Reactor Coolant Pump Knowledge of the effect of a loss or malfunction on the following will have on the RCPS: Starting requirements

Proposed Question: RO 29

It is desired to start 2A1 RCP. The amber start permissive light on RTGB 204 is NOT lit. The following parameters are observed:

- CCW flow 203 gpm
- CCW pressure 24 psig
- Lift Pump Flow 6 gpm
- Lift Pump pressure 1925 psig

Which parameter will have to be adjusted in order to start the pump?

A. CCW flow

B. CCW pressure

C. Lift Pump flow

D. Lift Pump pressure

Proposed Answer: B

Explanation (Optional):

A. Although flow corresponds to pressure, flow is not an input
B. Correct (30 psig is required)
C. Although flow corresponds to pressure, flow is not an input
D. Lift pump pressure is sufficient in this case (>1900)

Technical Reference(s): 0711202 (Attach if not previously provided)

Proposed references to be provided to applicants during examination: _____

Learning Objective: 0711202-8 (As available)

Question Source: Bank # _____
Modified Bank # _____ (Note changes or attach parent)
New x

Question History: Last NRC Exam _____

Question Cognitive Level: Memory or Fundamental Knowledge x

Written Examination
Question Worksheet

Comprehension or Analysis

10 CFR Part 55 Content: 55.41 7

55.43 _____

Comments:

- Two pressure switches on the discharge header (after the gage).
  - The first switch closes at 1900 psig header pressure to supply an input to the start permissive circuit for the RCP.
  - The second switch actuates an annunciator on RTGB-103 [203] at ~1850 psig oil pressure.

- An annunciator to alert the operator that a thermal overload condition exists, power is lost, or the control switch is in OFF.

- Low oil flow from either lower bearing oil cooler of ~7 gpm.

On Unit 2, a reflash panel exists at the rear of RTGB 204 and is used to identify the specific nature of the cause of the "XXX RCP OIL SYSTEM TROUBLE" annunciators, J17, 18, 19, and 20. The reflash panel identifies the following causes of alarm:

- Upper oil reservoir high level
- Upper oil reservoir low level
- Lower oil reservoir high level
- Lower oil reservoir low level
- Oil lift pump A/B low discharge pressure
- Oil header low pressure
- Low oil flow

Pushbuttons are provided to acknowledge, reset, and test the reflash panel alarms. On Unit 1, specific identification of the cause of "XXX RCP OIL SYSTEM TROUBLE" annunciation is determined via cross checking the appropriate indicator on the DCS Flat Panel display on RTGB 103 or on the RCP as listed in the Annunciator Response Procedure for J13, 14, 15, and 16.

**RCP Lube Oil Collection System**

Each RCP has a lube oil collection system designed to collect oil from all potential pressurized and unpressurized leakage sites in the RCP lube oil system in order to comply with fire protection (Appendix R) requirements. Oil leakage has occurred in the past on PSL Unit 1 and 2, particularly from the high pressure oil lift system and from

Operators record vibration readings for the RCPs each shift. In addition, trend monitoring may be required under various situations such as following an alarm. The digital indication on the modules automatically cycles between channels at a time interval of ~3 seconds; therefore, the operator must ensure that the correct vibration channel is being displayed when reading the meter.

When an alarm setpoint is exceeded, a common annunciator on RTGB-103 [203] actuates and the monitor reading locks in on the probe in alarm. The operator acknowledges alarms by pressing the Reset pushbutton on the BN Vibration Monitor Rack. Approximately 20 seconds after resetting the alarm, the monitor starts cycling again to check the other probes.

## RCP Component Cooling Water Interface

The CCW system supplies 200-240 gpm at 100-130 psig to each RCP to cool the pump (thermal barrier and seal cooler heat exchanger) and motor (upper and lower guide bearing oil coolers and motor air coolers). Refer to Figure 26.

The RCP start permissive ensures adequate CCW cooling flow prior to start of an RCP. A bellows type pressure switch monitors CCW supply pressure for each RCP. This pressure switch provides one of the inputs to the associated RCP's start permissive circuit. CCW pressure must be at least 30 psig (which corresponds to 200 gpm CCW flow) to meet the start permissive requirement.

The combined outlet temperature of the CCW is monitored by a local (inside containment) temperature detector. A flow element immediately downstream of the temperature detector monitors the CCW flow leaving the RCP. The bourdon tube flow element supplies an indicator inside containment. Each RCP has a flow indicator that alarms on RTGB-103 [203] at ~190 gpm. Since Unit 1 does not have a meter on the RTGB for CCW flow, absence of this alarm indicates that CCW flow is adequate to the RCP. Actual flow rate can be verified locally. Additionally, temperatures would increase for the associated RCP if CCW flow rate is low. [Unit 2 has indication for CCW temperature and flow for each pump on the DCS Flat Panel display on RTGB-203.] Refer to Figure 26.

Written Examination
Question Worksheet

| Examination Outline Cross-reference: | Level | RO | SRO |
|---|---|---|---|
| | Tier # | 2 | |
| | Group # | 1 | |
| | K/A # | K5.16 | |
| | Importance Rating | 3.2 | |

004 Chemical and Volume Control Knowledge of the operational implications of the following concepts as they apply to the CVCS: Source of T-ave and T-ref signals to control and RPS

Proposed Question: RO 30

Which one of the following describes the method used to determine pressurizer level program?

Tavg generated from:

A. highest Thot/Average Tcold safety channels / Tref generated from main steam header pressure.

B. average of Thot and Tcold control channels / Tref generated from turbine first stage pressure.

C. highest Thot/Average Tcold safety channels / Tref generated from turbine first stage pressure.

D. average of Thot and Tcold control channels / Tref generated from main steam header pressure.

Proposed Answer: B

Explanation (Optional):

A. Both incorrect (safety channels feed RPS)
B. Correct
C. Incorrect temperature input, correct steam input
D. Correct temperature input, incorrect steam input

Technical Reference(s): 0711402 (Attach if not previously provided)

Proposed references to be provided to applicants during examination: _____

Learning Objective: PSL OPS SYS 402-4 (As available)

Question Source: Bank # _____
Modified Bank # _____ (Note changes or attach parent)
New X

Question History: Last NRC Exam _____

Question Cognitive Level: Memory or Fundamental Knowledge X
Comprehension or Analysis _____

10 CFR Part 55 Content: 55.41 7
55.43 _____

Comments:

Written Examination
Question Worksheet

# DETAILED DESCRIPTION

## REACTOR PROGRAM UNIT CALCULATOR (RPUC)

The RPUC performs the majority of calculations required by the RRS. It does so by means of internal calculators, alarm/inhibit bistables, and comparative/summing circuitry. The parameters generated by the calculators are used as inputs to the bistables, comparative circuitry, and to other units of the RRS. Refer to Figure 6.

There are four functions provided by the RPUC:

- $T_{AVG}$ calculator
- Pzr level setpoint ($L_{SP}$) calculator
- $T_{REF}$ calculator
- A signal to prohibit automatic CEA movement at low power levels.

### $T_{AVG}$ Calculator

The $T_{AVG}$ calculator uses 4-20 mA current inputs of ($T_{HOT}$ and $T_{COLD}$) to determine $T_{AVG}$. The 4-20 mA (1-5 volt) output signal corresponds to 515°F – 615°F.

$$T_{AVG} = \frac{T_{HOT} + T_{COLD}}{2}$$

Refer to Figures 7 and 8. While there is only one $T_{HOT}$ RTD per loop, on Unit 1 the operator may select either of two RTDs in each of the loop cold legs [only one cold leg RTD]. This feature allows switching to the alternate temperature input in the event of an RTD failure, permitting the continued use of the same RRS cabinet. The selector switches for these RTDs are located on RTGB 103.

- [There is only one RTD per cold leg.]
- [The operator must switch RRS cabinets if the $T_{COLD}$ RTD fails].

The $T_{AVG}$ output can be generated from either one or both of the loops' inputs using selector switches inside the Test Panel. Refer to Figure 4. The $T_{AVG}$ output is directed to:

- a recorder on RTGB 104 [204]
- the SBCS
- $L_{SP}$ calculator
- circuitry where it is compared against the calculated value of $T_{REF}$

**Pressurizer Level Setpoint ($L_{SP}$) Calculator**

The $T_{AVG}$ calculator output is the input to the $L_{SP}$ calculator. Figure 9 graphically illustrates the program used to develop $L_{SP}$. The output signal of the $L_{SP}$ calculator (a 4-20 mA current signal corresponding to 0-100% pzr level) is sent, via the RRS Selector Switch, to the pzr level control system to vary pzr level with changes in $T_{AVG}$.

- The output is also sent to a recorder on RTGB 103 [203]. Refer to Figure 10.

The shape of the curve reflects a "best fit" regarding stretch power and the $T_{AVG}$ program used as power is raised.

**$T_{REF}$ Calculator**

The $T_{REF}$ calculator input is turbine first-stage pressure ($P_{TFS}$), a 4-20 mA current signal corresponding to 0-125% power. Refer to Figure 11. Figure 12 graphically illustrates the program that develops the $T_{REF}$ signal. This is a linear signal that is fixed at hot zero power (532°F) and is variable at the 100% power value.

After each core reload and prior to startup, a new 100% $T_{REF}$ value is determined based on reload calculations. If required, I&C will adjust the program circuitry. When the unit reaches 100% power, the $T_{REF}$ value can again be adjusted if necessary to equal $T_{AVG}$.

**NOTE:** The 100% power $T_{REF}$ value shown on Figure 12 is a nominal value.

The $T_{REF}$ signal (a 1-5 volt signal corresponding to 515° to 615°F) is sent to a recorder on RTGB 104 [204], and is compared to the calculated $T_{AVG}$ to produce a temperature error signal, $E_T$. Refer to Figure 13.

$E_T$ is an input to the following: (Refer to Figure 14.)

- $T_{AVG} - T_{REF}$ alarm bistable which generates:
  - High $T_{AVG} - T_{REF}$ annunciator
  - High $T_{AVG} - T_{REF}$ AWP
  - Low $T_{AVG} - T_{REF}$ annunciator

- Reactor Control Unit Calculator (RCUC)
  - CEA status (direction)
  - CEA speed

**CEA Auto Motion Low Power Prohibit**

This function is carried out by the RPUC with the input of $\phi_N$. A bistable prevents the RCUC from carrying out any automatic CEA movements until reactor power has increased above 15% power. On a downpower transient, the bistable will block automatic control when power decreases below 11%. Refer to Figures 15 and 16.

- Annunciator K-12 [K-6], CEA AUTO MOTION LOW POWER PROHIBIT, is associated with this function.

## REACTOR CONTROL UNIT CALCULATOR (RCUC)

**NOTE:** The RCUC material is included for informational purposes. Automatic control of CEAs is currently disabled at PSL.

The RCUC has the following inputs:

- $E_T$, from the RPUC
- $\phi_N$, from the RRS NI Control Channels
- $P_{TFS}$, turbine first stage pressure (same signal as $T_{REF}$ input)

Written Examination
Question Worksheet

| | | |
|---|---|---|
| Question History: | Last NRC Exam | _____ |
| Question Cognitive Level: | Memory or Fundamental Knowledge | _____ |
| | Comprehension or Analysis | x |
| 10 CFR Part 55 Content: | 55.41 | 7 |
| | 55.43 | _____ |

Comments:

Written Examination
Question Worksheet

| Examination Outline Cross-reference: | Level | RO | SRO |
|---|---|---|---|
| | Tier # | 2 | |
| | Group # | 1 | |
| | K/A # | A4.15 | |
| | Importance Rating | 3.6 | |

004 Chemical and Volume Control Ability to manually operate and / or monitor in the control room: boron concentration

Proposed Question: RO 31

Unit 1 is at 100% power, steady state. It is desired to place1B CVCS Ion Exchanger in service after resin replacement. It has been determined that 7862 gallons of water must be flushed through the ion exchanger to equalize boron concentration. The following parameters exist:

- 1A BAMT boron concentration 5080 ppm
- 1B BAMT boron concentration 6053 ppm
- RCS boron concentration 650 ppm

Which one of the following is the correct blend ratio / method for the required evolution? (Assume 1A is the Tech Spec designated BAMT)

Blend at:

A. 6.8 /1 to the Charging Pump suction

B. 8.3 / 1 to the VCT

C. 8.3 / 1 to the Charging Pump Suction

D. 6.8 / 1 to the VCT

Proposed Answer: B

Explanation (Optional):

A. Incorrect flow path, incorrect blend ratio
B. Correct
C. Correct blend ratio, incorrect flow path
D. Incorrect blend ratio, correct flow path

Technical Reference(s): 1-NOP-02.24 (Attach if not previously provided)

Proposed references to be provided to applicants during examination: _____

Learning Objective: 0702205-6 (As available)

Question Source: Bank # _____

Modified Bank # _____ (Note changes or attach parent)

New x

## 6.0 INSTRUCTIONS

CHECK

**NOTE**

- Blend Ratio = BAMT Concentration divided by RCS Concentration minus one.

$$\frac{BAMT}{RCS} - 1 \quad (PMW\ to\ Boric\ Acid)$$

- Makeup from Boron Concentration Control System can be directed to either the VCT (for long term effects, in any mode of operation) or the Charging Pump suction (for short term effects, in the MANUAL or Borate modes of operation).

### 6.1 Aligning for Automatic Blend

**NOTE**

- The Operation Supervisor SHALL be notified and a CR submitted of any unexplained or unplanned Reactivity change in accordance with OPS Policy 105 (i.e., >.5 deg Tcold change or >.5% power change).
- If a Reactivity management issue occurs, refer to procedure ADM-09.11, Reactivity Management.
- Engineering Assessment of FI-2210Y Boric Acid flow, show that there could be an error up to ~±.3 GPM. The test data shows that the system may tend to "overborate" at low boric acid flows (<4 GPM) and "underborate" at higher boric acid flows (>4 GPM). The effect on Reactivity will be more pronounced with longer evolutions such as rinsing in of ion exchangers.

**1.** ENSURE Section 3.0, Prerequisites, is completed at least once per shift. _____

**2.** ENSURE Section 4.0, Precautions / Limitations, has been reviewed at least once per shift. _____

**3.** ¶2 ENSURE calorimetric power is less than 100.00% prior to any dilutions by obtaining an hourly DCS calorimetric power log. _____

**4.** CALCULATE the proper blend ratio using the most recent chemistry samples of the 1A or 1B BAMT and the RCS. _____

**5.** ADJUST FRC-2210Y, Boric Acid Flow, to correspond to the calculated blend ratio. _____

Written Examination
Question Worksheet

| Examination Outline Cross-reference: | Level | RO | SRO |
|---|---|---|---|
| | Tier # | 2 | |
| | Group # | 1 | |
| | K/A # | K3.01 | |
| | Importance Rating | 3.9 | |

005 Residual Heat Removal Knowledge of the effect that a loss or malfunction of the RHRS will have on the following: RCS.

Proposed Question: RO 32

Unit 2 is in mode 6, mid-loop conditions, with the primary manways removed. If shutdown cooling were lost, which of the following conditions would have the greatest probability to result in RCS leakage and core uncovery?

A. Reactor head removed, hot leg nozzle dams installed, cold leg nozzle dams NOT installed.

B. Reactor head installed, hot leg nozzle dams installed, cold leg nozzle dams NOT installed.

C. Reactor head removed, hot leg nozzle dams NOT installed, cold leg nozzle dams installed.

D. Reactor head installed, hot leg nozzle dams NOT installed, cold leg nozzle dams installed.

Proposed Answer: B

Explanation (Optional):

A. Correct nozzle dam configuration , incorrect head configuration
B. Correct
C. Incorrect head configuration, incorrect nozzle dam configuration
D. Correct head configuration, incorrect nozzle dam configuration

Technical Reference(s): 0711207 (Attach if not previously provided)

Proposed references to be provided to applicants during examination: _____

Learning Objective: 0702207-13B (As available)

Question Source: Bank # _____
Modified Bank # _____ (Note changes or attach parent)
New X

Question History: Last NRC Exam _____

Question Cognitive Level: Memory or Fundamental Knowledge _____
Comprehension or Analysis x

10 CFR Part 55 Content: 55.41 7
55.43 _____

Comments:

RO 32



Concerns

The NRC and other industry bodies have expressed concern that a Loss of SDC event may occur during plant outages with the RCS in a reduced inventory or mid-loop operating condition that results in core uncovery and damage. The initial conditions (Refer to Figure 20) for this postulated scenario are:

- RCS level is at "Mid-Loop" with the RV Head on, and
- The Cold Leg is open to Containment (i.e., S/G Manway or RCP opening), and
- The Hot Leg is closed to Containment (i.e., nozzle dam or manway installed), or an inadequate hot leg vent path (i.e., removed PZR Safety, Head vent) exists to containment.

Shortly after SDC is lost, Decay Heat raises the temperature of the bulk fluid in the core barrel and outlet plenum to saturation. Subsequently, the air volume of the RV Head and RCS piping are filled with steam and pressurization of the RCS begins (Figure 21). Since the Hot Leg side of the RCS is isolated or inadequately vented to the containment, a d/p will develop between the Hot and Cold Legs. This d/p will cause the liquid level inside the Core Barrel to be depressed (as would a manometer) and raise the level in the Cold Legs. As the core and bulk fluid temperature increases, more boiling would occur, more steam generated and a higher d/p would be seen (Figure 22). This process continues with enough liquid displaced from the core area to spill out the Cold Leg opening (manway or removed RCP seal) and core uncovery occurring (calculations indicate 2.5 psid could lower level to the top of the core). Core uncovery feeds this process resulting ultimately in overheating and fuel pin integrity loss releasing radionuclides to containment and the atmosphere.

Another scenario involves Loss of SDC with the S/G Nozzle Dams in place and an otherwise intact RCS. In this scenario, the RCS pressurizes to the point where a Hot Leg Nozzle Dam is ejected, inventory is lost with subsequent core damage.

Although neither of these events have happened, the number of Loss of SDC related events and results of some of them has caused the NRC significant concern over the years.

- Reference 1[2]-NOP-01.04, "RCS Reduced Inventory and Mid-Loop Operation".

Written Examination
Question Worksheet

| Examination Outline Cross-reference: | Level | RO | SRO |
|---|---|---|---|
| | Tier # | 2 | |
| | Group # | 1 | |
| | K/A # | 2.1.32 | |
| | Importance Rating | 3.8 | |

005 Residual Heat Removal Conduct of Operations / Conduct of Operations / Ability to explain and apply system limits and precautions.

Proposed Question: RO 33

Unit 1 is in mode 5, entering a SNO for RCP seal replacement. The operators are performing the necessary lineups to enable them to drain down to below 33'.

1) Which one of the following describes the required configuration of the 1A and 1B shutdown cooling trains for the drain down?

2) What is the reason for selecting this configuration?

The operators should place:

A. (1) 1A shutdown cooling train in service and 1B shutdown cooling train in standby
(2) 1B is more susceptible to adverse suction conditions before 1A.

B. (1)1A shutdown cooling train in service and 1B shutdown cooling train in standby
(2)1A is more susceptible to adverse suction conditions before 1B.

C. (1)1B shutdown cooling train in service and 1A shutdown cooling train in standby
(2) 1B is more susceptible to adverse suction conditions before 1A.

D. (1)1B shutdown cooling train in service and 1A shutdown cooling train in standby
(2)1A is more susceptible to adverse suction conditions before 1B.

Proposed Answer: B

Explanation (Optional):

A. Correct lineup, incorrect reason
B. Correct
C. Reverse trains
D. Incorrect lineup, correct reason

Technical Reference(s): 1-NOP-01.04 (Attach if not previously provided)

Proposed references to be provided to applicants during examination: _____

Learning Objective: _____ (As available)

Question Source: Bank # _____

Modified Bank # _____ (Note changes or attach parent)

Written Examination
Question Worksheet

| | | |
|---|---|---|
| | New | x |
| Question History: | Last NRC Exam | |
| Question Cognitive Level: | Memory or Fundamental Knowledge | x |
| | Comprehension or Analysis | |
| 10 CFR Part 55 Content: | 55.41 | 10 |
| | 55.43 | |

Comments:

**4.22** Many of the requirements and operating restrictions in this procedure are based on a fuel operating cycle of less than or equal to 16000 EFPH (18 month fuel). If the core is loaded with fuel which can exceed 16000 EFPH, the associated requirements and operating limits will have to be revised to address the longer cycle fuel.

**4.23** §18 If the fuel shuffle has NOT been completed and the Reactor is in Mode 6, Refueling, Then operation in Reduced Inventory is NOT allowed due to the limitations on SDC flow and heat removal capability.

**4.24** §18 The minimum level for operating a LPSI pump is 29 feet, 9½ inches (24½ inches on LI-1117 & LI-1117-1). Operating at levels less than 29 feet, 9½ inches could cause air entrainment and pump cavitation. 1-NOP-03.05, Shutdown Cooling, Figure 2, SDC & LPSI Pump Flow Requirements, provides more detailed information regarding acceptable RCS level and SDC flow.

**4.25** 1-NOP-03.05, Shutdown Cooling, Figure 2, SDC & LPSI Pump Flow Requirements, is based on zero drain down flow. If RCS drain down is in progress, the maximum allowable SDC flow is determined by subtracting the drain down flow from the maximum values of Figure 2. SDC Purification flow that returns to the LPSI pump suction (no drain down to the HUTs) does not affect the flow limits of Figure 2.

**4.26** §18 Maximum SDC flows are limited by suction voiding considerations. The maximum SDC flow limits vary with RCS level, temperature and pressure. If the maximum SDC flow limits are exceeded, LPSI pump suction line voiding could occur, causing loss of SDC capability as a result of water hammer and / or LPSI pump damage.

**4.27** §18 Due to the suction piping arrangement, LPSI Pump 1A is subject to experience adverse suction conditions before LPSI Pump 1B. Therefore, to improve the ability to recover the SDC system from a single failure, LPSI Pump 1A will be operated in reduced inventory and LPSI Pump 1B will be in the standby alignment.

**4.28** S/G primary side manway and nozzle dam installation and removal should NOT be performed unless the indicated RCS level is less than or equal to 30 ft, 1 1/3 inches on **ALL** of the following indicators:

| | | |
|---|---|---|
| **1.** | Tygon level hose | 30 ft, 1 1/3 inches |
| **2.** | LI-1117 | 28.3 inches |
| **3.** | LI-1117-1 | 28.3 inches |

**4.29** Draining via a LPSI pump minimum flow line when the reactor is in Mode 6, Refueling, is not practical due to the small SDC flow operating range

Written Examination
Question Worksheet

| Examination Outline Cross-reference: | Level | RO | SRO |
|---|---|---|---|
| | Tier # | 2 | |
| | Group # | 1 | |
| | K/A # | K4.08 | |
| | Importance Rating | 3.2 | |

006 Emergency Core Cooling Knowledge of ECCS design feature(s) and/or interlock(s) which provide for the following: Recirculation flowpath of reactor building sump.

Proposed Question: RO 34

Which one of the following describes how NPSH for the safeguards pumps is maintained during transfer of the suction flowpaths on the receipt of a Recirculation Actuation Signal?

Containment Sump outlet valves:

A. will be fully open within 90 seconds and the RWT outlet valves will be fully closed within 30 seconds.

B. will be fully open before the RWT outlet valves begin to close.

C. will be fully open within 30 seconds and the RWT outlet valves will be fully closed within 90 seconds.

D. will not be fully open until the RWT outlet valves are fully closed.

Proposed Answer: C

Explanation (Optional):

A. Reverse stroke times
B. Logically plausible
C. Correct
D. Will be fully open before the RWT valves are fully closed

Technical Reference(s): 0711207 (Attach if not previously provided)

Proposed references to be provided to applicants during examination: _____

Learning Objective: 0702207-10 (As available)

Question Source: Bank # _____
Modified Bank # _____ (Note changes or attach parent)
New X

Question History: Last NRC Exam _____

Question Cognitive Level: Memory or Fundamental Knowledge x
Comprehension or Analysis _____

10 CFR Part 55 Content: 55.41 7
55.43 _____

Comments:

If an SIAS occurs with a loss of off-site power, the following occurs:

- emergency buses shed certain loads
- EDGs start and come up to rated frequency and voltage within 10 sec
- EDG breaker closes
- the sequence for auto EDG loading commences

The HPSI header isolation valves do NOT receive load shed signals. When power is available and an SIAS occurs, the valves stroke open. The HPSI pumps receive a start signal in the 3rd load block (6 second after EDG breaker closure).

Upon receipt of an SIAS with off-site power available, LPSI pumps A and B start and a signal is sent to open the four LPSI header isolation valves. When the RCS pressure drops below LPSI pump shutoff head (185 psig), the LPSI pumps will inject water into the RCS.

On SIAS with a loss of offsite power, the LPSI pumps are tripped if running and restart 3 seconds after EDG breaker closure (3-second load block). There is no time delay for opening the LPSI header isolation valves and they do NOT receive a load shed signal. Like the HPSI header valves, they stroke open when an SIAS is present and power is available.

- LPSI pumps may be stopped following automatic actuation if RCS pressure is greater than **200 psia** and controlled.

A Recirculation Actuation Signal (RAS) will be generated when the RAS two-out-of-four logic matrix is satisfied (**RWT at 4' [6']**). The receipt of an RAS will cause CNTMT sump isolation valves, MV-07-2A and MV-07-2B, to open within 30 seconds and the RWT outlet valves, MV-07-1A and MV-07-1B to shut within 90 seconds. This ensure constant suction supply during transfer to recirculation. Refer to Figures1 and 2.

- RAS will stop the LPSI pumps and shut the pump recirculation miniflow valves V3659 and V3660 provided the valves lockout keyswitch has been placed in ON. Once the valves stroke closed, the lockout keyswitch is returned to OFF. [There are no power supply keyswitches to the four miniflow isolations on Unit 2.]

Written Examination
Question Worksheet

| Examination Outline Cross-reference: | Level | RO | SRO |
|---|---|---|---|
| | Tier # | 2 | |
| | Group # | 1 | |
| | K/A # | A2.01 | |
| | Importance Rating | 3.9 | |

007 Pressurizer Relief/Quench Tank Ability to (a) predict the impacts of the following malfunctions or operations on the P S; and (b) based on those predictions, use procedures to correct, control, or mitigate the consequences of those malfunctions or operations: Stuck-open PORV or code safety.

Proposed Question: RO 35

Unit 1 tripped from 100% power due to a LOOP. A few minutes after the trip the RCO noticed:

- Quench Tank pressure at 78 psig and rising
- Slight increase in Containment gas and particulate.
- Pressurizer level at 41% and rising
- Pressurizer pressure is 1810 and lowering
- RCS subcooling, lowering

Which of the following contingency actions would the crew be expected to take while in EOP-01

A. Cooldown using the ADV's

B. Stop the running Charging pumps

C. Close PORV block valves

D. Ensure Pressurizer spray valves closed

Proposed Answer: C

Explanation (Optional):

A. Cooldown NOT allowed in EOP-01
B. Stopping Charging pumps with lowering subcooling is not appropriate
C. Correct, <2300 psia close/isolate PORV's
D. Spray valves, even if open are not effective with RCP's off (LOOP)

Technical Reference(s): 1-EOP-01 (Attach if not previously provided)

Proposed references to be provided to applicants during examination: _____

Learning Objective: 0702822-05 (As available)

Question Source: Bank # _____
Modified Bank # _____ (Note changes or attach parent)
New x

Question History: Last NRC Exam _____

Question Cognitive Level: Memory or Fundamental Knowledge _____
Comprehension or Analysis x

Written Examination
Question Worksheet

10 CFR Part 55 Content: 55.41 7
55.43 _____

Comments:

Ro 35



**3.0** PREREQUISITES — INITIAL

**3.1** The Waste Gas System is aligned and available to the extent that the Quench Tank can be vented to the containment surge header. _____ US

**3.2** The Nitrogen Supply System is aligned and available to the extent that Nitrogen can be supplied to the Quench Tank. _____ US

**3.3** The Primary Water System is aligned and available to the extent that Primary Water can be supplied to the Quench Tank. _____ US

**3.4** The Liquid Waste Management System is aligned and available to the extent that the Quench Tank can be drained to the Reactor Drain Tank. _____ US

**3.5** Appendix A, Quench Tank Valve Alignment, has been completed. _____ US

**4.0** PRECAUTIONS / LIMITATIONS

**4.1** The Quench Tank rupture disc blow out pressure is 100 psig.

**4.2** V1242, Quench Tank Relief Valve, setpoint is 70 psig. This relief valve discharges to the Containment atmosphere.

**4.3** The Quench Tank temperature should be maintained less than 120°F to ensure design limits for the Quench Tank are not exceeded.

**4.4** V6781, Quench Tank for N2 Press Reg, is normally set to maintain 3 psig (2 to 4 psig) pressure in the Quench Tank.

**4.5** Quench Tank pressures of less than 1 psig could increase the possibility of PORV and Pressurizer Safety Valve leakage.

**4.6** Cooling the Quench Tank to less than 115°F could increase the possibility of PORV and Pressurizer Safety Valve leakage.

**4.7** Normal Quench Tank level is 55% to 65%. If normal level is NOT maintained, the rupture disc blow out pressure could be exceeded during a Quench Tank design event.

**4.8** If the Quench Tank water level is less than 40%, the inlet sparger will be uncovered.

**4.0 OPERATOR ACTIONS** (continued)

# RCS PRESSURE CONTROL

| INSTRUCTIONS | CONTINGENCY ACTIONS |
|---|---|
| ☐ **4.** DETERMINE RCS Pressure Control acceptance criteria are met: | |
| **A.** VERIFY Pressurizer pressure is between 1800 and 2300 psia. | **A.1** If Pressurizer pressure is less than 2300 psia, and the PORV(s) are OPEN, Then PERFORM **ANY** of the following:<br>**1.** OVERRIDE the open PORV(s).<br>**2.** CLOSE the associated PORV block valve(s). |
| | **A.2** If Pressurizer pressure is less than 1600 psia, Then ENSURE **ALL** of the following:<br>**1.** SIAS has ACTUATED.<br>**2.** CIAS has ACTUATED.<br>**3.** **ONE** RCP in **EACH** loop is stopped. |
| **B.** VERIFY Pressurizer pressure is trending to between 2225 and 2275 psia. | **B.1** RESTORE and MAINTAIN Pressurizer pressure between 2225 and 2275 psia by performing **ANY** of the following:<br>**1.** ENSURE proper operation of the Pressurizer Pressure Control System.<br>**2.** Manually OPERATE heaters and spray. |
| **C.** VERIFY RCS subcooling is at least 20°F. | **C.1** If RCS subcooling is less than 20°F or RCP(s) exhibit cavitation, Then STOP **ALL** RCPs. |

/R23

**4.0 OPERATOR ACTIONS** (continued)

# RCS INVENTORY CONTROL

| INSTRUCTIONS | CONTINGENCY ACTIONS |
| --- | --- |
| **NOTE**<br>Rising Pressurizer level with concurrent lowering RCS Subcooled Margin are symptoms of a Pressurizer Steam Space LOCA. | |
| ☐ **3.** DETERMINE RCS Inventory Control acceptance criteria are met: | |
| **A.** VERIFY **BOTH** of the following conditions exist,<br>• Pressurizer level is between 10 and 68%<br>• Pressurizer level is trending to between 30 and 35% | **A.1** RESTORE and MAINTAIN Pressurizer level between 30 and 35% by performing **ANY** of the following:<br>**1.** ENSURE proper operation of the Pressurizer Level Control System.<br>**2.** Manually CONTROL Charging and Letdown. |

Written Examination
Question Worksheet

| Examination Outline Cross-reference: | Level | RO | SRO |
|---|---|---|---|
| | Tier # | 2 | |
| | Group # | 1 | |
| | K/A # | K4.01 | |
| | Importance Rating | 3.1 | |

008 Component Cooling Water Knowledge of CCWS design feature(s) and/or interlock(s) which provide for the following: Automatic start of standby pump

Proposed Question: RO 36

Unit 2 has the following CCW alignment at 100% power:

- 2A and 2B CCW pump running
- 2C CCW pump is started for surveillance testing
- 2AB 4.16 KV bus has been aligned to the 2A 4.16KV bus
- A Loss of Offsite power (LOOP) occurs

Which of the following describes the response of the Unit 2 CCW pumps to the LOOP?

2A CCW pump will _____
2B CCW pump will _____
2C CCW pump will _____

A. Automatically restart.
Automatically restart.
Automatically restart.

B. Automatically restart.
Automatically restart.
NOT Automatically restart.

C. Automatically restart.
NOT Automatically restart.
Automatically restart.

D. NOT Automatically restart.
Automatically restart.
NOT Automatically restart.

Proposed Answer: A

Explanation (Optional):

Deleted: 7
Deleted: 8
Deleted: 71
Deleted: 69
Deleted: 70

The CCW pump motors are powered from the safety-related 4160 volt AC buses which are loaded onto the Emergency Diesel Generators upon a loss of off-site power (LOOP). If a LOOP occurs, the normally running CCW pumps 'A' and 'B' would restart immediately [the CCW breaker does not open].

Deleted: after their six second load sequencing t
Deleted: ime delay
Deleted: Note: During the next outage, Unit 2's CCW load sequence should be changed to match Unit 1. The CCW pump is started immediately to prevent flashing and void formation due to heating of stagnant CCW in the containment coolers (from the LOCA or EDSE). If the CCW pump restart was delayed, water hammer from the mixtures could cause a rupture of the CCW piping

**Power supplies** to the CCW pumps are:

| Pump | Power supply |
|---|---|
| 1A | 1A3 4160 volt AC bus |
| 1B | 1B3 4160 volt AC bus |
| 1C | 1AB 4160 volt bus (normally aligned to the 1B3 4160 volt AC bus) |
| 2A | 2A3 4160 volt AC bus |
| 2B | 2B3 4160 volt AC bus |
| 2C | 2AB 4160 volt bus (normally aligned to the 2A3 4160 volt AC bus) |

Deleted: .
Deleted: .¶
Deleted: ¶

The CCW pumps can be operated from two locations:

Deleted: ¶

- **NORMAL** operation by the respective control switch at the RTGB 106 [206] in the control room. The circuit NORMAL/ISOLATE switch, located at the 4160 VAC switchgear, is in the NORMAL position. Each pump control switch has five positions:

  - **START** which starts the pump
  - **STOP** which stops the pump
  - **PULL TO LOCK**
    The **standby** CCW pump control switch (normally 'C'), at RTGB 106 [206], is maintained in **the PULL TO LOCK** position. **This configuration prevents the standby pump from AUTO starting for a SIAS and/or LOOP condition, thereby ensuring that only one CCW pump would be loaded to one EDG and preventing an overload condition.** The time that a standby pump is not in PULL TO LOCK is minimized to the time just prior to starting it. The standby pump would be taken from PULL TO LOCK to AUTO GREEN FLAG for a very short time prior to starting the standby pump. Once the running pump is stopped, its control switch would be taken to PULL TO LOCK.

Deleted: (normally 'C')
Deleted: s
Deleted: is

  - **Green Flag after STOP**

Deleted: 7
Deleted: 8
Deleted: 71
Deleted: 69
Deleted: 70

This position enables the control circuit to enable certain AUTO start conditions. For example, if the 'A' CCW pump was stopped and the 'C' pump was in PULL TO LOCK and a SIAS were to occur, the 'A' pump would AUTO START.

- **Red Flag after START**
  This position enables the control circuit to enable certain AUTO start conditions. For example, if the 'A' and 'B' pumps were running and the 'C' pump was in PULL TO LOCK, and a LOOP and/or a LOOP/SIAS occurred, the 'A' and 'B' pumps would restart once the load sequencing time delays met the start conditions.

- **LOCAL** operation at the pump breaker would occur for control room inaccessibility conditions when the NORMAL/ISOLATE switches are taken to the ISOLATE position for the 'A' and 'B' pump controls, with the exception being the 'C' pump, which has a three position switch:

  - NORMAL-AUTO, which is the normal position of the switch
  - NORMAL-MAN [NORMAL-MANUAL], which is not used
  - ISOLATE, which is used during control room inaccessibility conditions

**Alarms** associated with the CCW pumps:

- CCW THIRD PUMP INTLK FAILURE alarm occurs when the load sequence timer has timed out and the 'C' CCW pump has not started on the EDG with the control switch NOT in PULL TO LOCK

- CCW low header pressure alarm occurs at 60 psig

- 'C' CCW Pump Valves MISALIGNED alarm occurs when the electrical 4160 and 480 VAC sources for the 'C' pump are not the same as the suction and discharge valves it is selected to (See Figure 5)

- CCW PUMP OVERLOAD/TRIP alarm occurs on an overcurrent or trip condition.

Deleted: ------Page Break------

- CCW PUMP MOTOR HIGH TEMPERATURE alarm occurs at 185°F. The Senior Nuclear Plant Operator would be dispatched to read the local temperature indication

Formatted: Bullets and Numbering

Deleted: 7
Deleted: 8
Deleted: 71
Deleted: 69
Deleted: 70

This position enables the control circuit to enable certain AUTO start conditions. For example, if the 'A' CCW pump was stopped and the 'C' pump was in PULL TO LOCK and a SIAS were to occur, the 'A' pump would AUTO START.

- **Red Flag after START**
  This position enables the control circuit to enable certain AUTO start conditions. For example, if the 'A' and 'B' pumps were running and the 'C' pump was in PULL TO LOCK, and a LOOP and/or a LOOP/SIAS occurred, the 'A' and 'B' pumps would restart once the load sequencing time delays met the start conditions.

- **LOCAL** operation at the pump breaker would occur for control room inaccessibility conditions when the NORMAL/ISOLATE switches are taken to the ISOLATE position for the 'A' and 'B' pump controls, with the exception being the 'C' pump, which has a three position switch:

  - NORMAL-AUTO, which is the normal position of the switch
  - NORMAL-MAN [NORMAL-MANUAL], which is not used
  - ISOLATE, which is used during control room inaccessibility conditions

**Alarms** associated with the CCW pumps:

- CCW THIRD PUMP INTLK FAILURE alarm occurs when the load sequence timer has timed out and the 'C' CCW pump has not started on the EDG with the control switch NOT in PULL TO LOCK

- CCW low header pressure alarm occurs at 60 psig

- 'C' CCW Pump Valves MISALIGNED alarm occurs when the electrical 4160 and 480 VAC sources for the 'C' pump are not the same as the suction and discharge valves it is selected to (See Figure 5)

- CCW PUMP OVERLOAD/TRIP alarm occurs on an overcurrent or trip condition.

Deleted: ------Page Break------

- CCW PUMP MOTOR HIGH TEMPERATURE alarm occurs at 185°F. The Senior Nuclear Plant Operator would be dispatched to read the local temperature indication

Formatted: Bullets and Numbering

R036

# Single Question Report

| | | | | |
|---|---|---|---|---|
| **QID#:** 3073 | **Objective:** 0702209-08 | | **System:** CCW | |
| **Rev:** 0 | **Cog Level:** 2 | **KA #** 026.AK3.02 | **RO** 3.6 | **SRO** 3.9 |

Unit 2 has the following CCW alignment at 100% power:

- 2A & 2B CCW pump running.
- 2C CCW pump is started for surveillance testing
- 2AB 4.16 KVAC bus has been aligned to the 2A 4.16 KVAC bus.
- A Loss Of Offsite Power (LOOP) occurs

Which ONE of the following describes the response of the Unit 2 CCW pumps to the LOOP?

2A CCW pump will _____.
2B CCW pump will _____ .
2C CCW pump will _____.

A. Automatically restart.
Automatically restart.
Automatically restart.

B. Automatically restart.
Automatically restart,
NOT Automatically restart.

C. Automatically restart.
NOT Automatically restart,
Automatically restart.

D. NOT Automatically restart.
Automatically restart,
NOT Automatically restart.

**Reasons the choices are right or wrong.** **Correct answer is A.**

A.

B.

C.

D.

**Source Ref:** CCW Lesson text 0711209, LP 0702209-8 CWD-2998-B-326-SHs 201,209,205

**Open Ref:**

Written Examination
Question Worksheet

| Examination Outline Cross-reference: | Level | RO | SRO |
|---|---|---|---|
| | Tier # | 2 | |
| | Group # | 1 | |
| | K/A # | A3.05 | |
| | Importance Rating | 3.0 | |

008 Component Cooling Water Ability to monitor automatic operation of the CCWS, including: Control of the electrically operated, automatic isolation valves in the CCWS.

Proposed Question: RO 37

The following conditions exist:

- A steam generator tube leak has occurred on Unit 2
- During the downpower, the CCW "N" header developed a leak
- After the "N" header automatically isolated, the operators manually tripped the reactor and turbine
- The "N" header leak has been isolated
- LA-10, "CCW SURGE TANK COMPARTMENT A LEVEL LOW" locked in
- LB-10, "CCW SURGE TANK LEVEL HIGH/COMPARTMENT B LEVEL LOW" locked in
- Chemistry has requested that cooling be restored to the sample heat exchangers to allow S/G samples to be taken

Based on the above conditions, which of the following describes the minimum action(s)/conditions that must occur to open the CCW "N" header isolation valves?

The CCW "N" header valves

A. will open if the control switches are placed in "closed/override" and then placed in "open".
B. can only be locally opened using the handjack on the valve operator.
C. will open if the control switches are placed in the "open" position.
D. cannot be opened until level is restored to the surge tank.

Proposed Answer: D

Explanation (Optional):

A. Correct for SIAS signal, not for low level
B. Valve does not have a handjack to open the valve
C. Correct for Unit 1 SIAS signal
D. Correct

Technical Reference(s): 0711209 (Attach if not previously provided)

Proposed references to be provided to applicants during examination: _____

Learning Objective: 0702209-4 (As available)

Question Source: Bank # _____

Written Examination
Question Worksheet

| | | | |
|---|---|---|---|
| | Modified Bank # | | (Note changes or attach parent) |
| | New | X | |
| Question History: | Last NRC Exam | | |
| Question Cognitive Level: | Memory or Fundamental Knowledge | | |
| | Comprehension or Analysis | x | |
| 10 CFR Part 55 Content: | 55.41 | 7 | |
| | 55.43 | | |

Comments:

RO 37



Deleted: 7
Deleted: 8
Deleted: 71
Deleted: 69
Deleted: 70

The air supply solenoid valves for 'A' side supply HCV-14-8A and return HCV-14-9 are powered from 'A' 125 VDC. The air supply solenoid valves for 'B' side supply HCV-14-8B and return HCV-14-10 are powered from 'B' 125 VDC.

These valves are controlled by CLOSE/AUTO/OPEN [CLOSE/OPEN/ OVERRIDE] switches located on RTGB 106[206]. Valve position indication is also provided on RTGB 106. A **SIAS** [SIAS and/or CCW Surge Tank low level] will automatically close the valves.

Deleted:

On Unit 1, placing the Control Switch in OPEN will override the SIAS Signal. When SIAS is reset the switches should be returned to AUTO.

On Unit 2, during a SIAS the 'N' header valves can be re-opened by going to CLOSE and then the OVERRIDE position. When the SIAS is reset, the switches must be returned to CLOSE and then the OPEN position. If the switch is left in the OVERRIDE position with no SIAS signal present, the valves will automatically close. For normal valve operation, it is necessary to take both valves to CLOSE and then to OPEN, as each valve is in the other control circuit. Taking both the control switches to CLOSE resets the circuit for operation.

Deleted:

Unit 2 'N' header valves will automatically close on a low Surge Tank level. These valves CANNOT be OVERRIDDEN on a low Surge Tank condition.

- LS-14-6A causes HCV-14-8A and HCV-14-9 to go closed.
- LS-14-6B controls HCV-14-8B and HCV-14-10 to go closed.

**Rupture of the 'N' Header**

On Unit 1, the operator will close all four 'N' header valves for a rupture of the 'N' header. [On Unit 2, the 'N' header valves will automatically close on low Surge Tank level.] The Reactor and Turbine are tripped and Standard Post Trip Actions will be carried out.

Written Examination
Question Worksheet

| Examination Outline Cross-reference: | Level | RO | SRO |
|---|---|---|---|
| | Tier # | 2 | |
| | Group # | 1 | |
| | K/A # | A4.01 | |
| | Importance Rating | 3.7 | |

010 Pressurizer Pressure Control Ability to manually operate and/or monitor in the control room: PZR spray valve.

Proposed Question: RO 38

Operators are conducting a heatup on Unit 2. The following conditions exist:

- RCS pressure: 1700 psia
- RCS temperature: 480°F
- 2A1, 2B1 and 2B2 RCP's are operating
- A loss of the 2A1 6.9 KV bus occurs

Which one of the following describes the method(s) of controlling pressurizer pressure in the current plant configuration?

Pressurizer pressure can:

A. ONLY be controlled by the Auxiliary Spray Valves.

B. ONLY be controlled by Main Spray Valve PCV 1100E.

C. be controlled by Main Spray Valve PCV 1100F and Auxiliary Spray Valves.

D. be controlled by Main Spray Valves PCV 1100E and 1100F.

Proposed Answer: C

Explanation (Optional):

A. PCV-1100F is available, 2B1RCP is not lost on power loss
B. Auxiliary spray valves are available
C. Correct
D. PCV-1100E is ineffective with the loss of 2B2 RCP

Technical Reference(s): 2-0120035, 0711802 (Attach if not previously provided)

Proposed references to be provided to applicants during examination: _____

Learning Objective: 0702801-02 (As available)

Question Source: Bank # 1886
Modified Bank # _____ (Note changes or attach parent)
New _____

Question History: Last NRC Exam _____

Question Cognitive Level: Memory or Fundamental Knowledge _____

Written Examination
Question Worksheet

| | | |
|---|---|---|
| | | _____ |
| | Comprehension or Analysis | x |
| 10 CFR Part 55 Content: | 55.41 7 | |
| | 55.43 _____ | |

Comments:

| REVISION NO.: | PROCEDURE TITLE: | VOLTAGE: |
|---|---|---|
| 0 | UNIT 2 POWER DISTRIBUTION BREAKER LIST SWITCHGEAR ST. LUCIE UNIT 2 | 6.9 KV |
| PROCEDURE NO.: 2-ADM-03.01A | | SWITCHGEAR: SWGR 2A1 |

## 6.9 KV Switchgear 2A1

Location: Turbine Building Switchgear Room
Power Supply Breakers: 01 or 02

| BKR. NO. | CUBICLE NO. | CWD NO. | EQUIPMENT | NOTES |
|---|---|---|---|---|
| 2-30101 + 2W87 | 01 | 912 | Incoming Feeder From U.A. Transf. 2A | |
| 2-30102 + 2W89 | 02 | 904 | Incoming Feeder from S/U Transf. No. 2A | |
| 2-30103 | 03 | 615 | Feedwater Pump 2A | |
| 2-30104 | 04 | 101 | Reactor Coolant Pump 2A1 | |
| 2-30105 | 05 | 113 | Reactor Coolant Pump 2B2 | |

**7.2** Subsequent Operator Actions (continued)

| INSTRUCTIONS | CONTINGENCY ACTIONS |
|---|---|
| **1. A.** (continued) | **1. A.** (continued) |
| | **3.** If both pressure channels are failed or automatic pressure control does NOT operate properly, Then operate spray controller in manual and energize or deenergize heaters as necessary. |

**NOTE**

Divergence of Spray Line Temperatures between 2B1 and 2B2 Spray lines may indicate a stuck open spray valve. The stuck open spray valve would have the spray line with the higher temperature approaching cold leg temperature.

| | |
|---|---|
| **B.** Verify PCV 1100E, Spray Valve 2B2, and PCV 1100F, Spray Valve 2B1, CLOSED by observing BOTH of the following: | **B.** If either spray valve is OPEN, Then perform the following: |
| **1.** CLOSED valve position indication. | **1.** If PCV 1100E, Spray Valve 2B2, is OPEN, Then PLACE the spray valve selector switch in PCV 1100F. |
| **2.** TIA-1103, Spray Line 2B1 Temperature, and TIA-1104, Spray Line 2B2 Temperature, approximately equal. | **2.** If PCV 1100F, Spray Valve 2B1, is OPEN, Then PLACE the spray valve selector switch in PCV 1100E. |

# Single Question Report

**QID#:** 1886 **Objective:** 0702801-02 **System:** ONP
**Rev:** 0 **Cog Level:** 2 **KA #** 003.K2.01 **RO** 3.1 **SRO** 3.1

Operators are conducting a heatup on Unit 2. The following conditions exist:

- RCS pressure: 1700 psia
- RCS temperature: 480°F
- 2A1, 2B1 and 2B2 RCP's are operating
- A loss of the 2B1 6.9 KV bus occurs.

Which ONE of the following statements describes the status of Pressurizer Pressure?

Pressure can:

A. ONLY be controlled by the Auxiliary Spray Valves.

B. ONLY be controlled by Main Spray Valve PCV 1100E.

C. be controlled by Main Spray Valves PCV 1100E and 1100F.

D. be controlled by Main Spray Valve PCV 1100E and Auxiliary Spray Valves.

**Reasons the choices are right or wrong.** **Correct answer is D.**

A. PCV 1100 E available

B. auxiliary spray valves available

C. spray valve 1100F ineffective with loss of 2B1 RCP

D.

**Source Ref:** ADM. 2-0010720 Breaker L

**Open Ref:**

**Revision Notes:** IPT-2 question

## Question Use History

HLC17 SRO IPT1 Exam, 0720240,
HLC17 SRO IPT1 Exam, 0,
HLC-16 PreAudit Quiz 8 (HLC-14A NRC), 0717020, 6/3/2004
HLC-14A RO NRC 2000, 0717001, 1/1/2000

Written Examination
Question Worksheet

| Examination Outline Cross-reference: | Level | RO | SRO |
|---|---|---|---|
| | Tier # | 2 | |
| | Group # | 1 | |
| | K/A # | K3.01 | |
| | Importance Rating | 3.9 | |

012 Reactor Protection Knowledge of the effect that a loss or malfunction of the RPS will have on the following: CRDS.

Proposed Question: RO 39

Unit 2 is in mode 2, reactor startup in progress. The following conditions exist:

- CEA Group 5 @ 42", reactor NOT critical
- "A" channel TM/LP indication failed LOW, RPS bistable in bypass
- "B" channel SUR indication failed LOW, RPS bistable not bypassed

Which one of the following failures would enable an interlock that would prevent withdrawing rods to criticality?

A. RPS channel "A" Variable High Power fails HIGH

B. Thot Safety channel "C" fails LOW

C. SUR indication "D" channel spikes to pre-trip setpoint

D. Steam Generator Pressure Safety Channel "B" fails LOW

Proposed Answer: D

Explanation (Optional):

A. Must have 2/4 pre-trips on separate channels, this is 2/4 on same channel
B. Would be correct if Thot failed high
C. Would be correct if A SUR in the stem failed high
D. Correct (ASGT generates a TM/LP trip

Technical Reference(s): 0711405 (Attach if not previously provided)

Proposed references to be provided to applicants during examination: _____

Learning Objective: 0702405-10 (As available)

Question Source: Bank # _____
Modified Bank # _____ (Note changes or attach parent)
New x

Question History: Last NRC Exam _____

Question Cognitive Level: Memory or Fundamental Knowledge _____
Comprehension or Analysis x

10 CFR Part 55 Content: 55.41 7
55.43 _____

Written Examination
Question Worksheet

Comments:

lamps will be illuminated.

**CEA Control Motion Interlocks**

The following restrictions to CEA movement are present in any mode of CEA operation:

- No CEA can be withdrawn beyond its upper limit nor inserted beyond its lower limit as detected by the upper and lower CEA limit reed switches and indicated by the corresponding indicator on the CEA core mimic display.

- No CEA can be withdrawn if a CEA withdrawal prohibit (CWP) signal is received from the RPS. This CWP signal also produces a CWP annunciator.

- No shutdown group CEA can be withdrawn or inserted in the presence of any of the following inhibiting functions unless the inhibiting functions are overridden by the inhibit bypass controls.

    - Power dependent insertion limit (PDIL) annunciator
    - Group out of sequence annunciator
    - Group deviation annunciator
    - All regulating groups are not below 10"

- No regulating group CEA can be withdrawn or inserted in the presence of any of the following inhibit functions unless the inhibiting functions are overridden by the inhibit bypass controls.

    - Power dependent insertion limit (PDIL) annunciator
    - Group out of sequence annunciator
    - Group deviation annunciator
    - All shutdown CEAs are not above 129"

**CEDS Logic Cabinet**

The CEDS logic cabinet consists of four bays in a single cabinet located in the electrical equipment room as shown on Figure 2. It contains power supply drawers, group programmers, individual CEA control modules, and interface relays for the CEDS. It receives the various inputs, control signals, and interlock signals from the reactor regulating system, reactor protection system, turbine control system, and DCS. It provides output to the CPPs and control panel annunciation. The CEDS LOGIC

- When the trip unit is key bypassed, relay K-29 is energized and prevents that channel from contributing a signal that would open the PORVs.

**Thermal Margin/Low Pressure (TM/LP)**

- The TM/LP trip is provided to prevent operation when DNBR is less than **1.22 [1.28]**.
- A reactor trip is initiated whenever the RCS pressure signal drops below a minimum setpoint value of **1887 [1900] psia** or a continuously calculated setpoint (described below), whichever is higher. A TM/LP pre-trip occurs **50 psi** greater than the trip setpoint.
- 2-out-of-4 pretrips will generate a CWP.

RPS calculates inside CPCs the computed setpoint as a function of the higher of ΔT power or neutron power, reactor inlet temperature, the number of coolant pumps operating and the axial shape index. Consistent with Technical Specifications, the minimum value of reactor coolant flow rate, the maximum azimuthal tilt, and the maximum CEA deviation permitted for continuous operation are assumed in the generation of this computed trip setpoint. CEA group sequencing is also assumed to be in accordance with Technical Specifications.

A channel trip annunciator and/or channel pretrip annunciator, each common to all four channels, is triggered by a trip/pretrip condition on any one of the four channels. The TM/LP setpoint calculation is accomplished by the setpoint calculator shown in Figure 10. Included on Figure 10 is the functional location of the $T_{COLD}$ calibrate potentiometer and flow input . The flow input is a hardwired input to the calculator. Origin of the input signals is displayed as is the interface with the ASGT protective trip function.

**Asymmetrical Steam Generator Transient (ASGT) Part of TM/LP**

- The ASGT is designed to protect against AOOs, associated with secondary system malfunctions, that create asymmetric RCS cold leg temperatures, resulting in significant radial peaking.
- The most limiting event is the loss of load to one S/G caused by a single Main Steam Isolation Valve (MSIV) slow closure.

For this case, the ASGT results in a trip, sooner than the low steam generator level trip, providing a smaller degradation in the margin to maximum kw/ft limits and allowable DNBR.

The CPC TM/LP calculator, TM/LP bistable trip unit and steam generator pressure signals available in the RPS are utilized to provide a Rx trip for these events. Refer to Figure 11. The S/G pressure signals are the absolute value of the pressure difference between the two steam generators $|P_{SG1}-P_{SG2}|$. This value is utilized by the ASGT calculator to determine if asymmetric trip conditions are reached. See Figure 12.

- If the difference exceeds **135 [120] psid**, a signal is input to the TM/LP calculation which results in a reactor trip. The additional input sets the TM/LP low pressure trip value to 2500 psia ensuring a trip. A **70 psid** difference causes a 2500 psia signal to be applied to the pretrip setpoint yielding a TM/LP pretrip.

To test the ASGT, depress the test pushbutton located inside CPC-2. Test power is supplied from the logic matrix test power supply. The $P_{SG1}$ and $P_{SG2}$ test signals are set by potentiometers located in CPC-2. To verify that the unit works when S/G1 pressure is greater than S/G2 pressure and vice versa, the settings of the test potentiometers must be reversed and the test button pushed again.

**Loss of Load**

- Although no credit is taken in the Safety Analysis, this trip provides turbine protection, reduces the severity of the ensuing transient, and helps avoid lifting the main steam line safety valves. This trip also precedes the high Pzr pressure trip helping to limit RCS pressure.

The trip is initiated at **1000 psig** (T.S. 800 psig) as sensed by 2-out-of-4 low DEH oil pressure switches from the DEH Emergency Trip Header. The trip signal is automatically inhibited below **11%** (T.S. 15%) power by contacts from the Linear Power Range Safety Channel Linear 1 (Lin 1) bistable. Refer to Figure 6. There is no Pre-trip associated with this RPS trip signal.

- A turbine trip causes a loss of load reactor trip when operating above **15%** power.
- The Tech Spec value for Loss of Load is ≥ 800 psig.

**Hi Containment (Cntmt) Pressure**

# CORE PROTECTION CALCULATOR INTERFACE BLOCK DIAGRAM

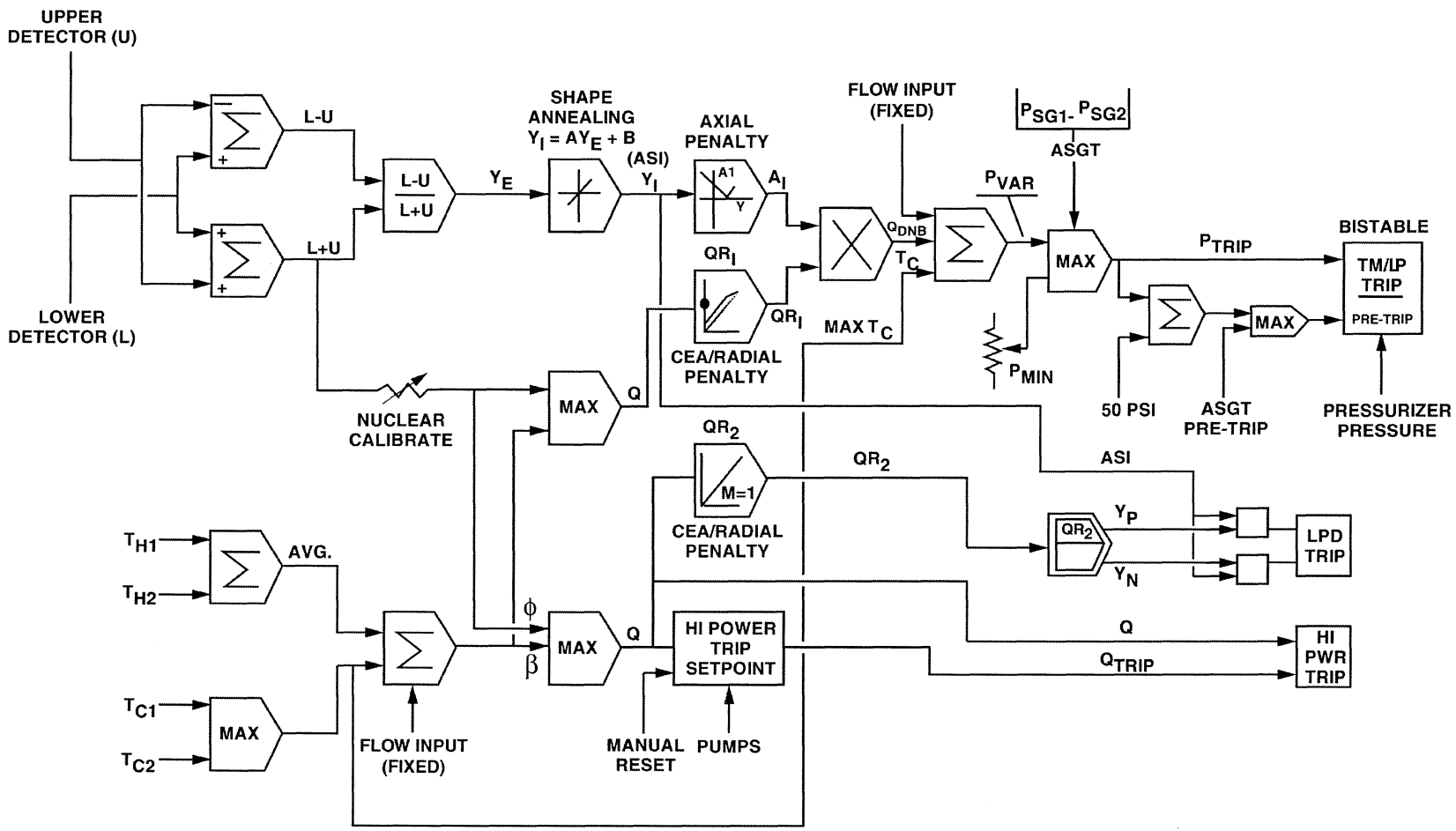


(T/RCO/0711404-F14-R10)

FIGURE 11

Written Examination
Question Worksheet

| Examination Outline Cross-reference: | Level | RO | SRO |
|---|---|---|---|
| | Tier # | 2 | |
| | Group # | 1 | |
| | K/A # | A2.02 | |
| | Importance Rating | 3.7 | |

012 Reactor Protection Ability to (a) predict the impacts of the following malfunctions or operations on the RPS; and (b) based on those predictions, use procedures to correct, control, or mitigate the consequences of those malfunctions or operations: Loss of instrument power.

Proposed Question: RO 40

Unit 1 is at 100% power with the following:

- The 1MA Instrument Bus in on the maintenance bypass bus due to the Inverter being out of service.
- A loss of the 1MC Instrument bus then occurs.

Which of the following states the plant response and the proper mitigation strategy?

A. 4 Trip Circuit Breakers (TCB's) open. Place the MC Instrument bus on its respective maintenance bypass bus.

B. 4 Trip Circuit Breakers (TCB's) open. Notify Electrical Maintenance to investigate loss of MC Inverter.

C. 2 Trip Circuit Breakers (TCB's) open. Place the MC Instrument bus on its respective maintenance bypass bus.

D. 2 Trip Circuit Breakers (TCB's) open. Notify Electrical Maintenance to investigate loss of MC Inverter.

Proposed Answer: B

Explanation (Optional):

A. Unit 1 shares one maintenance bypass bus for two Instrument busses (MA and MC share). Unit 2 has individual bypass busses.
B. Correct, cannot connect to maintenance bypass
C. 4 TCB's open
D. 4TCB's open

Technical Reference(s): 0711404, 1-0970030 (Attach if not previously provided)

Proposed references to be provided to applicants during examination: _____

Learning Objective: PSL OPS SYS 404 LPC-17 (As available)

Question Source: Bank # _____

Modified Bank # _____ (Note changes or attach parent)

New x

Written Examination
Question Worksheet

| | | |
|---|---|---|
| Question History: | Last NRC Exam | |
| Question Cognitive Level: | Memory or Fundamental Knowledge | |
| | Comprehension or Analysis | x |
| 10 CFR Part 55 Content: | 55.41 | 7 |
| | 55.43 | |

Comments:

## APPENDIX A
## PLACING 1MA OR 1MC INSTRUMENT BUS ON THE MAINTENANCE BYPASS BUS
(Page 1 of 3)

**CAUTION**
This appendix is to be used for a loss of instrument bus only. These instructions are NOT to be used for normal removal or restoration of inverters. Incorrect execution of this appendix can result in the inadvertent actuation of safeguards equipment as well as a plant trip.

**NOTE**
Maintenance bypass buses should remain energized at all times except during maintenance of bus isolimiters.

1. At the 1A Maintenance Bypass Bus Cabinet, verify proper voltage (120 VAC ± 2%) and frequency (60HZ ±1%) is being supplied to the bypass bus; if NOT, then ensure that the isolimiter supply breaker (1A5 MCC Isolimiter Bkr. 1-41207) to the bypass bus is in the ON position.

**NOTE**
1MA and 1MC instrument buses share a common maintenance bypass bus (1A). Feeder breakers for each set of instrument buses are mechanically interlocked so that only ONE instrument bus can be supplied by the maintenance bypass bus at any one time.

2. At the 1A Instrument Bus Transfer Panel, verify that the other instrument bus is NOT aligned to the 1A maintenance bypass bus.

3. At the 1A Maintenance Bypass Bus, close the applicable instrument bus maintenance bypass bus feeder breaker:

   **A.** For 1MA instrument bus: 1MA Ckt. 13 ON; 1MC Ckt. 14 OFF.

   **B.** For 1MC instrument bus: 1MA Ckt. 13 OFF; 1MC Ckt. 14 ON.

4. At the 1A Instrument Bus Transfer Panel, verify that the power available light, inside the transfer panel, for the applicable instrument bus, is ON.

   **A.** If feeding the 1MA instrument bus: 1A, L/1009-2 ON.

   **B.** If feeding the 1MC instrument bus: 1A, L/1009-4 ON.

**5.0** ENTRY CONDITIONS

**5.1** Plant conditions indicate loss of instrument bus or its associated inverter has occurred. One or more of the following may be present:

**1.** Annunciators A-43, B-43, A-53 or B-53, 120V AC Inst. Bus Inverter Trouble.

**2.** Loss of power to either MA, MB, MC or MD RPS cabinets along with automatic trip of four TCBs.

**3.** Loss of power to MA, MB, MC or MD ESFAS cabinet.

**4.** Loss of power to MA, MB, MC or MD safety related measurement instrumentation on RTGBs.

**5.2** Plant conditions indicate a loss of the QSPDS Power Panels as indicated by the following:

**1.** Loss of QSPDS Liquid Plasma Display on RTGB-103 and 104.

**2.** QSPDS Power Panel Trouble (annunciators Z-7, Z-8).

**3.** One pressurizer level control channel (LT-1110X, LT-1110Y) fails low and trip of all pressurizer heaters depending on Low Level Cutout switch position.

**4.** Local reflash alarms on QSPDS panel.

**6.0** EXIT CONDITIONS

**6.1** Power has been restored to the affected instrument bus by means of the inverter or the bypass bus. [See restrictions on bypass bus operation].

closed contacts A10-1 to A1-1 and B10-1 to B1-1, and finally to the positive terminals of the power supplies.

A TM/LP trip occurring in channels A and B will prevent current from flowing through the matrix relays. As shown on Figure 18, an open circuit will exist at contacts A7-1 and B7-1. The only current flow is through the "trip contacts" and trip indicator lights. The matrix relays de-energize and four trip path 'K' relays will de-energize causing the 'K' contacts in the TCB circuits to open. Subsequently, all TCBs open and all CEAs insert. The red "trip relay contact" lights indicate which channels and trip unit(s) have operated contacts in the logic matrix.

If only one channel trips, a current flowpath still exists and a reactor trip does not occur. Also, if a TM/LP trip occurs in channel A (A7-1), and an LPD trip occurs in channel B (B10-1), again a reactor trip does not occur. Two-out-of-four of the **same** NSSS trip unit must trip for a logic ladder circuit to be fully interrupted. Each logic matrix contains four matrix relays, all of which de-energize when the associated logic ladder is fully interrupted. If the associated matrix ladder is not fully interrupted, none of the logic matrix relays de-energize.

Each matrix has two 28 VDC power supplies, each powered from a different instrument bus. Failure of one matrix power supply only de-energizes two of the four matrix relays (e.g., failure of PS5 de-energizes logic relays AB1 and AB2, but not AB3 or AB4). It will be seen later that this causes four trip circuit breakers to open, however no CEDMs are de-energized.

- Failure of one of the two DC power supplies for a given logic matrix does not result in a reactor trip.

- The failure of one 120 VAC instrument bus also will not cause a trip. Each instrument bus only supplies the left or right side of the matrix in the ladders. It takes the loss of both sides to trip.

Each one of the four logic matrix relays supplied through a given logic ladder operates a single contact in one of the four trip paths. Each trip path consists of six contacts, representing each logic ladder, all in series with a TCB control ('K') relay and its 120 VAC instrument bus power supply. The 'K' relays are designated K1, K2, K3, and K4 according to trip path.

The CEDMs are powered by two 150 KW motor generator (MG) sets. Each MG set is capable of providing adequate power to hold all control rods and sustain the motion of any element already being stepped during a one-second loss of power to the MG set's motor. The MGs are arranged in parallel, so that the loss of a single MG does not result in the release of CEAs.

Each power supply source is separated into two buses. Each bus passes through two pairs of trip circuit breakers (each pair actuated by a different trip path) in series so that, although both sides must be de-energized to release the CEAs, there are two separate means of interrupting each side of the line. This arrangement provides a means of testing the RPS at power. CEDM power supplies are covered in detail in the CEDS RCO lesson text, 0711405. To trip it would take 1 out of the two pairs per side. This results in a 1 out of two taken twice trip logic. See Figures 1 & 3 .

The four protective channels that monitor the NSSS parameters are independent and isolated from each other. All measuring circuits are ungrounded, with interconnecting wiring run through separate conduits and wiring trays. Each channel has a separate cabinet to provide channel isolation.

Figure 2 illustrates the front panel layout of the RPS cabinet assembly. It includes the following components:

- Cabinet Assembly
- Trip Status Panel
- RPS Power Supplies
- Nuclear Instrumentation (NIs)
- RPS Calibration and Indication Panels (RPSCIP)
- Trip Units
- Trip Test Cable Panels
- Trip Inhibit Switch Panels
- Logic Test Modules and Test Power Supply
- Auxiliary Logic Assemblies
- Core Protection Calculator # 1 (CPC-1)
- Core Protection Calculator # 2 (CPC-2)

# SIMPLIFIED FUNCTIONAL DIAGRAM OF THE REACTOR PROTECTIVE SYSTEM

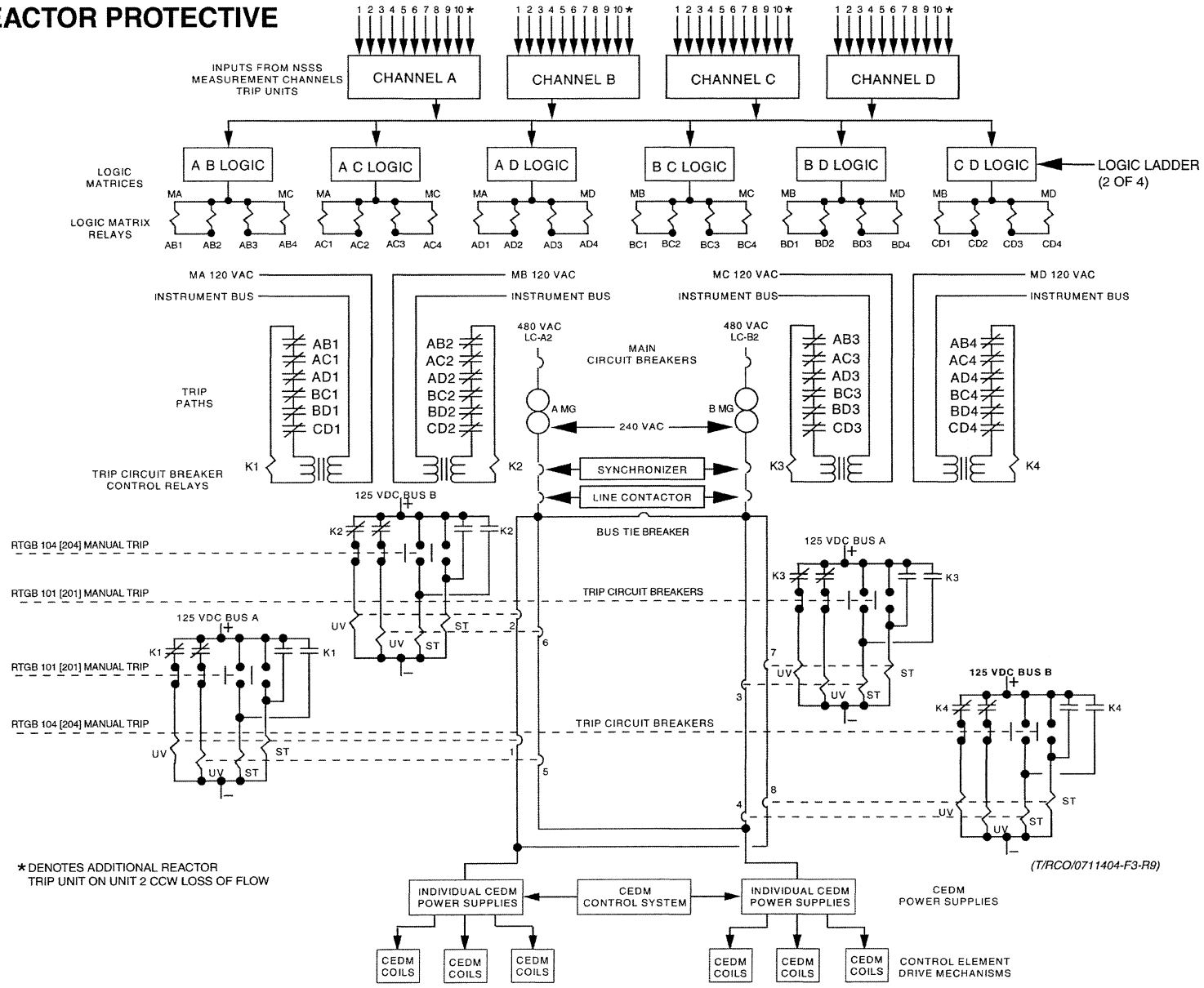


FIGURE 3

**7.0** OPERATOR ACTIONS

**7.1** Immediate Operator Actions

| INSTRUCTIONS | CONTINGENCY ACTIONS |
|---|---|
| 1. If a reactor trip occurs, Then carry out 1-EOP-01, Standard Post Trip Actions. | |

**7.2** Subsequent Operator Actions

| | |
|---|---|
| 1. Loss of an Instrument Bus: | 1. |

**NOTE**
RPS, ESFAS and AFAS will be in a 1 out of 3 logic on loss of one instrument bus and 4 TCBs will be tripped. Table 1 contains a listing of additional instrumentation supplied by the instrument buses.

| | |
|---|---|
| A. Ensure plant operating parameters are stable by comparing redundant, non-affected instrumentation. | |
| B. Determine which instrument bus has been lost by checking annunciators A-43, B-43, A-53, B-53 and RPS cabinets MA, MB, MC or MD. | |
| C. §1 If the affected instrument bus was being supplied by its inverter, Then, within 2 hours, place the affected instrument bus onto its respective maintenance bypass bus as follows: | C. §1 If instrument bus cannot be energized, within 2 hours, Then: |
| 1. For 1MA and 1MC, refer to Appendix A. | 1. If 1 (one) Instrument Bus is not energized from its associated inverter, Then re-energize the Instrument Bus within 2 hours or be in at least HOT STANDBY within the next 6 hours and in COLD SHUTDOWN within the following 30 hours. |

Written Examination
Question Worksheet

| Examination Outline Cross-reference: | Level | RO | SRO |
|---|---|---|---|
| | Tier # | 2 | |
| | Group # | 1 | |
| | K/A # | A3.01 | |
| | Importance Rating | 3.7 | |

013 Engineered Safety Features Actuation Ability to monitor automatic operation of the ESFAS including: Input channels and logic.

Proposed Question: RO 41

Unit 2 is at 100% power when the 1B channel Steam Generator Low Pressure MSIS in the MA ESFAS cabinet fails LOW. Prior to any operator action, which one of the following would cause ESFAS actuation?

A. The MC 120VAC Instrument Inverter trips due to an electrical fault.

B. The MA 1A steam generator pressure MSIS measurement channel fails low.

C. The MB 1A steam generator pressure MSIS measurement channel fails low.

D. The MA 120VAC Instrument Inverter trips due to an electrical fault.

Proposed Answer: A

Explanation (Optional):

A. Correct
B. Must be 2/4 on the same S/G, this is 2 different S/Gs on the same channel
C. 2/4 channels, different S/Gs
D. Loss of the MA inverter would de-energize the channel that's already failed

Technical Reference(s): 0711401 (Attach if not previously provided)

Proposed references to be provided to applicants during examination: _____

Learning Objective: 0702401-8 (As available)

Question Source: Bank # _____
Modified Bank # _____ (Note changes or attach parent)
New x

Question History: Last NRC Exam _____

Question Cognitive Level: Memory or Fundamental Knowledge _____
Comprehension or Analysis x

10 CFR Part 55 Content: 55.41 7
55.43 _____

Comments:

**Main Steam Isolation Signal (MSIS)**

The MSIS terminates blowdown of steam from both S/Gs and stops the normal feedwater flow to both S/Gs by closing the main steam and main feedwater isolation valves. On Unit 1, an MSIS signal trips the main feedwater pumps, the heater drain pumps, and the condensate pumps. A list of the components activated by the MSIS is given in EOP-99.

- MSIS is actuated by 2-out-of-4 low S/G pressure **(600 psia)** signals [and/or 2-out-of-4 high cntmt pressure **(3.5 psig)** signals.]

- MSIS is a **de-energize to actuate** signal.

There are four independent channels of S/G pressure transmitters for each S/G (PT-8013A, B, C, and D and PT-8023 A, B, C, and D). [On Unit 2, the cntmt pressure trips for MSIS come from a common cntmt pressure bistable used for SIAS.]

As shown in Figure 17, an initiation signal, generated by either channel, will actuate the isolation of both S/Gs. It should be noted, however, that the ESFAS system does not "auctioneer" S/G A & B pressures. The 'A' actuation channel looks only at 'A' S/G pressure and actuates 'A' train MSIS on 'A' S/G low pressure only. The same is true for B actuation channel. This means that it requires 2 of 4 low S/G pressure signals from the same S/G to actuate an A or B MSIS signal.

The operation of the measuring channels, actuation channels, isolation modules, output relays, and manual and automatic testing of the MSIS is similar to the operation of the SIAS. It is also divided into groups for testing purposes.

- MSIS is provided with a manual block for low S/G pressure actuation to permit shutdown depressurization of the Main Steam System without initiating MSIS. The block is a manual operator action performed by a NORM/BLOCK spring-return key switch on RTGB 106 [206].

- The block can only be initiated when 3-out-of-4 S/G pressure channels reach **700 psia** decreasing.

Written Examination
Question Worksheet

| Examination Outline Cross-reference: | Level | RO | SRO |
|---|---|---|---|
| | Tier # | 2 | |
| | Group # | 1 | |
| | K/A # | A.401 | |
| | Importance Rating | 3.6 | |

022 Containment Cooling Ability to manually operate and/or monitor in the control room: CCS fans.

Proposed Question: RO 42

The following conditions exist:

- Unit 2 is at 100% power.
- Containment Fan Coolers 1A, 1B and 1D are running, 1C is in standby with its control switch in AUTO.
- A loss of offsite power occurs.
- 2A and 2B Emergency Diesel Generators start and load as expected.

Which one of the following describes the expected condition of the Containment Fan Coolers in this event?

A. All fan coolers running in fast speed.

B. ONLY 1A, 1B and 1D fan coolers running in slow speed.

C. All fan coolers running in slow speed.

D. ONLY 1A, 1B and 1D fan coolers running in fast speed.

Proposed Answer: A

Explanation (Optional):

A. Correct
B. All fans start, slow speed is SIAS only
C. Correct number of fans, incorrect speed
D. Correct speed, incorrect number of fans

Technical Reference(s): 0711207 (Attach if not previously provided)

Proposed references to be provided to applicants during examination: _____

Learning Objective: 0702207-10 (As available)

Question Source: Bank # LOR 1411
Modified Bank # _____ (Note changes or attach parent)
New _____

Question History: Last NRC Exam _____

Question Cognitive Level: Memory or Fundamental Knowledge x
Comprehension or Analysis _____

Written Examination
Question Worksheet

10 CFR Part 55 Content: 55.41 7
55.43 _____

Comments:

**Containment Cooling Fans**

Unit 1:

Fans are centrifugal, direct driven, with backward curved airfoil blades that provide a non-overloading characteristic. The fan motors are single speed, water cooled AC induction motors powered from 480 V load center 1A2 for fans HVS-1A and 1B, and load center 1B2 for fans HVS-1C and 1D. Control power is supplied from 125 VDC battery A and B.

Cooling water for the motors is supplied from CCW at a rate of 50 gpm. Each fan has a control switch on RTGB 106. During normal operation the four fan-cooler units operate to supply the containment building with 60,000 cfm air flow each. Upon receipt of an SIAS, all four fan-cooler units will automatically start and supply post-accident heat removal air at an expected flow rate of 58,000 cfm each. The fans are in the three second load block.

Unit 2:

Use vane axial flow fans that consist of a multi-bladed rotor assembly mounted directly to the motor shaft. The fan-rotor is of the adjustable pitch type so air flow can be mechanically adjusted. The two-speed fan motors are not cooled by CCW. The fan motors are cooled by air that has been through the cooling coils.

Each fan has a **STOP/AUTO/START/TEST** control switch and off/fast/slow indication lights on HVAC control board. The fan motors are powered from 480 VAC buses; fans 2HVS-1A/1B from MCC 2A9 and 2HVS-1C/1D from MCC 2B9. Control power is supplied from the 480V fan breaker through a step down transformer. There is a **FAST/REMOTE/SLOW** local control switch on each MCC for maintenance. During normal operation three of the four fan-cooler units operate in fast speed to supply the containment with an air flow of 60,000 cfm each.

Upon receipt of an SIAS, all four fan-cooler units start in slow speed to supply approximately 39,600 cfm air flow each for post-accident heat removal system. Following a loss of power to the MCC or an individual fan breaker is cycled the respective fan will start in fast if the control switch is in Auto. There is a 3 second time delay before auto starting. This places these fans in the three second load block following a loop.

The fan can be placed in slow speed by taking the control switch to TEST. To return the fan to fast, the control switch is first taken to STOP, then placed in START. Time should be allowed for the fan to coast down before restarting.

Fan problems are indicated by any of these annunciators:

- CONTAINMENT FAN CLR HVS-1A (B, C, D) OVRLD/TRIP
- CONTAINMENT FAN CLR HVS-1A (B, C, D) FLOW LOW/VIBRATION HIGH
- CONTAINMENT FAN CLV HVS-1A (B, C, D) SIAS OVRD/SS ISOL.

The vibration alarm can be reset by depressing the reset button on the vertical section of RTGB-106 [HVCB]. Refer to the System Data Section of this text for more information on these and other annunciators.

**Containment Cooling Coils**

Each fan cooling unit contains two banks of cooling coils for normal and post-accident operation. The coils are mechanically and uniformly expanded into finned collars. Each fan cooler is in an enclosure designed to withstand any seismic loads and pressure differentials that could be encountered. The fan coolers are provided with a gravity damper to limit reverse flow while the fan is idle. The fan coolers are located in different quadrants within containment as illustrated in Figures 9 and 10. Three fan coolers are on floor elevation, 43', and the fourth is on the operating floor, 62'.

The fan coolers are designed for **1200 gpm** CCW flow. **1200 gpm** is also the minimum

RO 42

# Selected Questions Report

**QID#:** 1411 **Objective:** 0702207-10 **System:** CHR
**Rev:** 0 **Cog Level:** 1 **Origin:** New

Given the following:

Unit 2 is at 100%
Containment Fan Coolers 1A, 1B, and 1D are running in fast speed, 1C is off with its control switch in auto.

A loss of off-site power event occurs
The 2A and 2B DG energizes their associated loads

Which of the following describes the expected condition of the containment fan coolers following this event?

A. 1A, 1B, and 1D fans running in slow speed only

B. 1A, 1B, 1C, and 1D fans running in slow speed

C. 1A, 1B, and 1D fans running in fast speed only

D. 1A, 1B, 1C, and 1D fans running in fast speed

**Reasons Why Distractors Are Wrong.** **Correct answer is D.**

A. SIAS gets the slow speed start, but all fans would run. This is a difference to just the previously running loads restarting.

B. SIAS gets the slow speed start for all fans

C. This is a difference to just the previously running loads restarting. All fans start in fast speed.

D. correct

**Source Ref:**

**Open Ref:**

**Notes:**

**Revision History:**

Written Examination
Question Worksheet

| Examination Outline Cross-reference: | Level | RO | SRO |
|---|---|---|---|
| | Tier # | 2 | |
| | Group # | 1 | |
| | K/A # | K4.09 | |
| | Importance Rating | 3.7 | |

026 Containment Spray Knowledge of CSS design feature(s) and/or interlock(s) which provide for the following: Prevention of path for escape of radioactivity from containment to the outside (interlock on RWST isolation after swapover)

Proposed Question: RO 43

Which one of the following MANUAL operator actions, if not performed prior to the receipt of a Recirculation Actuation Signal (RAS), could result in an unmonitored radioactive release to the environment?

A. Unit 1 / Removing power inhibit from SI recirc valves.

B. Unit 2 / Aligning ECCS sumps to the reactor cavity sump.

C. Unit 1 / Isolating Low Pressure Safety Injection pump manual recircs.

D. Unit 2 / Isolating Containment Spray pump manual recircs.

Proposed Answer: A

Explanation (Optional):

A. Correct
B. Could cause a release, but would be monitored through the ECCS ventilation monitor.
C. LPSI pumps auto stop on RAS, not an issue
D. Unit 2 main header recirc valves auto close, whereas Unit 1 CS manual recircs are normally closed

Technical Reference(s): 1-EOP-03, 0711207 (Attach if not previously provided)

Proposed references to be provided to applicants during examination: _____

Learning Objective: 0702207-10 (As available)

Question Source: Bank # _____
Modified Bank # _____ (Note changes or attach parent)
New x

Question History: Last NRC Exam _____

Question Cognitive Level: Memory or Fundamental Knowledge _____
Comprehension or Analysis x

10 CFR Part 55 Content: 55.41 7
55.43 _____

Comments:

**4.0 OPERATOR ACTIONS** (continued)

| INSTRUCTIONS | CONTINGENCY ACTIONS |
|---|---|
| * **35. Verify RWT Transfer to Containment Sump**<br><br>VERIFY the Containment Sump level is rising as the RWT level lowers. **REFER TO** Figure 9, RWT vs. Containment Sump Level. | **35.1** CONFIRM the LOCA is outside Containment.<br><br>**35.2** CONTACT the TSC to initiate actions to makeup to the RWT.<br><br>**35.3** ENSURE CIAS is ACTUATED. **REFER TO** Table 2, Containment Isolation Actuation Signal. |
| * **36. RAS Preparation Steps**<br><br>When the RWT level is between 8 and 6 feet,<br>Then PERFORM the following:<br><br>**A.** ALIGN CS to HPSI pump suction.<br>• V3663, SD HX A to HPSI A<br>• V3662, SD HX B to HPSI B/C<br><br>**B.** Remove power inhibit from SI Recirc valves. | |
| * **37. Ensure RAS Actuation**<br><br>If the break is inside Containment, and RWT level is less than 4 feet,<br>Then ENSURE proper RAS as follows:<br><br>**A.** ENSURE that RAS is ACTUATED. | **A.1** MANUALLY Align RAS components. **REFER TO** Table 4, RAS Actuation. |
| **B.** If Charging pump suction is aligned to the RWT,<br>Then PLACE **ALL** Charging pump control switches in STOP. | |
| **C.** PLACE any non-running CS pump control switches in STOP. | |

The pumps are equipped with mechanical seals to minimize shaft leakage. Drains are provided to collect the seal leakage and direct the leakoff into the Waste Management System. Component Cooling Water (CCW) supplies cooling to the HPSI pump's inboard bearing, outboard bearing and seal cooler.

The pumps are also provided with minimum recirc flow protection to prevent damage that could occur from operating against shutoff head. The minimum recirc flow path is automatically secured on RAS to prevent pumping contaminated water back to the RWT and to prevent inventory loss from CNTMT.

The HPSI pumps are powered from the A3 and B3 4160 V buses, respectively. The motors have a rated speed of 3600 rpm and are capable of starting and accelerating to rated speed in 8 seconds with only 75% of rated voltage available.

The HPSI pumps' discharge valves, V3656 and V3654, are normally locked open with a keyswitch. If either of these valves are NOT full open, an alarm is actuated on annunciator panel R [Q].

The HPSI System HP [B] header and auxiliary HP [A] header are protected from over pressurization by a relief valve located on each header. The HP [B] header relief valve, V3412, has a set pressure of **1750 [1585] psig** and a capacity of 5 gpm. The auxiliary HP [A] header relief valve, V3417, has a set pressure of **2485 psig** and a capacity of 132 gpm. The increased capacity and set pressure of the auxiliary HP [A] header relief valve allows the charging pumps to use this HPSI flowpath for charging into the RCS (not a normal path).

The HPSI pumps are used to fill the SITs when RCS pressure is > 1500 psia and the plant is not on solid plant pressure control.

Overpressure protection from thermal expansion is provided for the LPSI header[s] by relief valve V-3439 [V3439 and 3507]. The relief valve(s) setpoint is **535 psig** and have a capacity of 5 [45] gpm.

On Unit 1, both trains of safeguards pumps share a common recirc flow line, therefore, closure of the minimum flow isolation valves, V3659 and V3660, causes ALL recirc flow to be lost. [Each train has its own recirc flow line.]

During normal operation, the recirc flow is directed to the RWT as shown in Figures 1 and 2. To prevent injecting containment sump water into the RWT during the recirculation mode, the Recirculation Actuation Signal (RAS) will shut the normally open motor operated recirculation minimum flow isolation valves, V3659 and V3660, and stop both LPSI pumps. These valves are powered from MCC A6 and MCC B6 and can be operated from RTGB 106 [206] by individual three-position [two-position] switches, **CLOSE/AUTO/OPEN [CLOSED/LOCKED OPEN]**. The minimum flow isolation valves can also be operated locally by OPEN/CLOSED pushbuttons [**CLOSE/LOCKED REMOTE/OPEN** switches].

Unit 1:

The minimum flow isolation valves are also provided with **OFF/ON** key operated lockout power switches located on RTGB 106. The additional lockout keyswitches are used to remove power to the valves thus preventing inadvertent closure. This makes the valves passive components such that a single active failure can NOT disable both trains. The operator restores power to the valves just prior to RAS, to ensure they isolate the recirculation path.

The normal indicating lights receive their power from the MOV supply breaker. There is a second set of indicating lights for each minimum flow isolation valve. These additional indicating lights receive power from a separate source than for the MOV. If the breaker for the MOV is open valve position can be determine from the second set of lights.

Written Examination
Question Worksheet

| Examination Outline Cross-reference: | Level | RO | SRO |
|---|---|---|---|
| | Tier # | 2 | |
| | Group # | 1 | |
| | K/A # | A3.02 | |
| | Importance Rating | 3.1 | |

039 Main and Reheat Steam Ability to monitor automatic operation of the MRSS, including: Isolation of the MRSS.

Proposed Question: RO 44

Unit 1 was operating at 100% power when the 1B MFW header ruptures at the 1B SG feedwater nozzle.

Which one of the following ESFAS actuations would be expected to occur due to this failure?

A. MSIS on low S/G pressure / AFAS 1 on low level in 1A SG

B. MSIS on low S/G pressure / AFAS 1/2 on low levels in 1A&1B SGs

C. MSIS on high containment pressure / AFAS 1 on low level in 1A SG

D. MSIS on high containment pressure / AFAS 1/2 on low levels in 1A&1B SGs

Proposed Answer: A

Explanation (Optional):

A. Correct
B. Correct for MSIS, AFAS 2 would lock out on steam header pressure, only AFAS 1 would actuate even though both S/Gs would have low levels
C. Correct if on Unit 2, Unit 1 does not have a MSIS on containment pressure
D. Similar to B, Unit 2 answer

Technical Reference(s): 0711826 (Attach if not previously provided)

Proposed references to be provided to applicants during examination: _____

Learning Objective: 0702826-04 (As available)

Question Source: Bank # 2401
Modified Bank # _____ (Note changes or attach parent)
New _____

Question History: Last NRC Exam _____

Question Cognitive Level: Memory or Fundamental Knowledge _____
Comprehension or Analysis x

10 CFR Part 55 Content: 55.41 5
55.43 _____

Comments:

As the primary pressure decreases due to the cooldown, the PPCS first turns on the proportional heaters and then the backup heaters in the pressurizer. These heaters will remain on until the pressure is under control or the level in the pressurizer drops to the heater cutoff setpoint.

The increase in energy removal due to the ESDE may result in a reactor trip on high reactor power, TM/LP (low RCS pressure or ASGT), low SG pressure or level, or if the break is inside the containment, high containment pressure. The turbine trips on reactor trip and the turbine stop valves close. Closure of the stop valve may isolate the break and terminate the cooldown if the ESDE is downstream of the valves. If the break is upstream, the SG pressure(s) will continue to decrease.

After turbine trip, the FWCS ramps the feedwater flow to 5% of the nominal flow. If a low level is reached in either SG, the Auxiliary Feedwater System is initiated. Auxiliary feedwater is terminated to the affected SG if its pressure is 275 psid (or 150 psid feedwater header) less than in the intact SG.

If the pressures in the SGs continue to drop following turbine trip, a MSIS will be generated on low SG pressure at 600 psia and the MSIVs will close. For PSL Unit 2, MSIS may also be generated on high containment pressure if the break is inside the containment building.

If the pressurizer pressure reaches the safety injection actuation setpoint, a SIAS is generated. The SI pumps start on SIAS. After the RCS pressure drops below the shutoff head, the pumps start delivery of borated water to the RCS. Also on SIAS, the letdown line is isolated. These actions help in restoring the RCS inventory and reactivity control functions.

The isolated, unaffected SG will be a heat source for the primary system until the affected SG dries out. At that point the unaffected SG will become the heat sink and will start to repressurize as the RCS heats up. This will continue until adequate RCS heat removal is established using the unaffected SG.

The double ended guillotine break (DEGB) results in blowdown of both SGs (see Figure 7) until a low SG pressure [or a high containment pressure] causes a main steam isolation signal (MSIS). The MSIS initiates the closure of the main steam isolation valves (MSIVs) and the main feedwater isolation valves (MFIVs) terminating the blowdown of the unaffected SG by 10 seconds into the transient. At 60 seconds into the transient the affected SG is empty. This terminates the cooldown since there is no longer heat transfer to the affected SG.

There is no AFW flow to the affected SG due to AFAS rupture logic, it will remain at atmospheric (Containment) pressure for the remainder of the transient. The unaffected SG from about 25-150 seconds is a heat source for the primary system as shown by the decrease in pressure during this time frame.

**Steam Generator Level**

Following the increase in steam flow resulting from the ESDE, the secondary side level in both SGs will initially swell due to the increased formation of steam (voids) on the secondary side. If the capacity of the FWCS cannot keep up with the steam demand, the level in both SGs will decrease prior to MSIS. Upon closure of the MSIV, the level in the isolated SG will eventually start to increase due to subsequent heat addition from the primary side and auxiliary feedwater flow. Since the affected SG cannot be isolated, its level will continue to decrease.

If the break is in the feedwater piping, there will be no initial level swell, only a level decrease in the affected SG. The unaffected SG level will remain relatively constant. For a further discussion of the parameter trends for a feed line break refer to the Loss of Feedwater Lesson Text.

# Single Question Report

| | | | | |
|---|---|---|---|---|
| **QID#:** 2401 | **Objective:** 0702826-04 | | **System:** ESFAS | |
| **Rev:** 0 | **Cog Level:** 1 | **KA #** 013A.2.02 | **RO** 4.3 | **SRO** 4.5 |

Unit 1 was operating at 100% power when the 1B MFW header ruptures at the 1B SG feedwater nozzle.

Which one of the following sets of ESFAS actuations would be expected to occur due to this failure?

A. MSIS on low S/G pressure
AFAS 1 on low level in 1A SG

B. MSIS on low S/G pressure
AFAS 1/2 on low levels in 1A&1B SGs

C. MSIS on high containment pressure
AFAS 1 on low level in 1A SG

D. MSIS on high containment pressure
AFAS 1/2 on low levels in 1A&1B SGs

**Reasons the choices are right or wrong.** **Correct answer is A.**

A. Correct response.

B. Incorrect: Only AFAS 1 on low level in 1A SG Plausible: Misunderstanding how the fautled SG circuit works could cause this error.

C. Incorrect: MSIS on containment pressure occurs on Unit 2 only.
Plausible: As unit difference error could occur.

D. Incorrect: Only AFAS 1 on low level in 1A SG also, MSIS occurs on high containment pressure on Unit 2.
Plausible: Misunderstanding how the faulted SG circuit works could cause this error and also unit difference mistake.

**Source Ref:**

**Open Ref:**

**Revision Notes:** Revised to limit to two choices per distractor since the discrimination was focused on the issues of those items only. The others just made the question unnecessarily harder.

## Question Use History

HLC17 IPT2 Quiz, 0720241, 9/6/2005
HLC-16 Company Audit RO Exam, 0720232, 7/15/2004

Written Examination
Question Worksheet

| Examination Outline Cross-reference: | Level | RO | SRO |
|---|---|---|---|
| | Tier # | 2 | |
| | Group # | 1 | |
| | K/A # | K3.04 | |
| | Importance Rating | 3.6 | |

059 Main Feedwater Knowledge of the effect that a loss or malfunction of the MFW will have on the following: RCS.

Proposed Question: RO 45

Unit 2 tripped from 100% power. During EOP-01, the following trends were noted:

- RCS pressure ↓
- RCS temperature ↓
- RCS subcooling ↑
- Pressurizer level ↓
- Containment pressure ↑
- Containment temperature ↑
- 2A S/G level ↓
- 2B S/G level ↓
- 2A S/G pressure ↓
- 2B S/G pressure ↓

Which one of the following events is taking place?

A. Feed line break upstream of the check valve.

B. Cold Leg break upstream of the RCP.

C. Feed line break downstream of the check valve.

D. Steam line break downstream of the MSIV.

Proposed Answer: C

Explanation (Optional):

A. RCS temperature would increase along with containment pressure and temperature
B. Subcooling would decrease in this event
C. Correct
D. Outside of containment, containment parameters would not increase

Technical Reference(s): 0711826 (Attach if not previously provided)

Proposed references to be provided to applicants during examination: _____

Learning Objective: 0702826-2 (As available)

Question Source: Bank # _____

Modified Bank # _____ (Note changes or attach parent)

New x

Written Examination
Question Worksheet

| | | |
|---|---|---|
| Question History: | Last NRC Exam | |
| Question Cognitive Level: | Memory or Fundamental Knowledge | |
| | Comprehension or Analysis | x |
| 10 CFR Part 55 Content: | 55.41 | 7 |
| | 55.43 | |

Comments:

R045

EOP-05) and by verifying at least once each 15 minutes that safety function acceptance criteria in EOP-05 are satisfied.

In particular, the status of SG pressure, RCS subcooling, and Containment and secondary plant radioactivity should provide the information necessary to discriminate between ESDE, LOCA, and SGTR. This continuous action will enable the operator to recognize and switch to the proper recovery procedure if the initial diagnosis is incorrect. Likewise, if a single event is not apparent or if the event-specific acceptance criteria for any safety function cannot be satisfactorily maintained, the operator is directed to exit EOP-05 and implement functional recovery procedure EOP-15.

- If either SG pressure is dropping uncontrolled, operators are directed to close MSIVs. This action is part of the first major recovery step that attempts to stop the uncontrolled RCS cooldown by isolating the excess steam demand. If SG pressure is less than 600 psia (585 psig), then the operator ensures MSIS is actuated. Subsequent steps of EOP-05 direct the operator toward complete isolation of the most affected SG for ESDEs that are not isolated by simply closing the MSIVs.

**Deleted:** An indicated SG pressure of less than 750 psiaa is lower than should be expected following a trip if an excess steam demand is not occurring and considering potentially adverse instrument inaccuracies.

- When plant parameters indicate that automatic safeguards such as MSIS, SIAS, CIAS, and CSAS should have occurred, operators are directed to verify such actuations and, if they did not occur, to manually initiate it as appropriate. This ensures that systems designed to mitigate the consequences of an ESDE and minimize potential releases of radioactivity are functioning within the range of setpoint valves and assumptions used in the accepted plant-specific safety analyses.

- When SIAS is actuated, all available charging and safety injection pumps should be operating to inject borated water into the RCS. Operators are directed to ensure that safety injection flow is maximized by comparing the indicated flow rate to Figure 2 of EOP-99, "Safety Injection Flow vs. RCS Pressure." In addition to providing makeup water to compensate for the shrinking RCS inventory (pressure and inventory control concern), it is necessary to maximize RCS boration during the initial stages of severe ESDEs to ensure that the reactor core remains subcritical. The positive reactivity added to the core due to the effects of the moderator temperature coefficient during excessive cooldown cold create the potential for a return to criticality, particularly if more than one CEA is not fully inserted.

- Possible increase of containment pressure, temperature, humidity, and/or sump level (if ESDE is inside the Containment).
- Possible increase in containment hydrogen concentration due to corrosion of zinc and aluminum by the Containment Spray System (if CSAS actuates).

## POTENTIAL CAUSES OF AN ESDE

In general, a breach of the secondary system pressure boundary is required to produce an ESDE. Piping failures could occur in areas weakened by corrosion, erosion (caused by impingement of fluids undergoing major changes of flowpath direction), cyclic stress, and/or water hammer. Pressure boundary valves could fail or otherwise be inadvertently opened. The scope of secondary system piping and components typically considered for this event is illustrated in Figure 1 and possible failures include:

- Main Steam Line Break (MSLB).
- Main Feedwater Line Break downstream of the last check valve in the line (a break upstream of the last check valve is considered a Loss of Feedwater Event).
- Inadvertent opening or failure of main steam valves such as atmospheric dump valve (ADV) or Steam Bypass Control System (SBCS) valves.
- Stuck-open main steam safety valves (MSSV).

# ESDE ANALYSIS

This section provides an analysis of major plant parameter trends typical of a MSLB occurring at 100% power. This steam line break location results in the largest cross-sectional flow area and will therefore produce the most rapid cooldown. The student should be aware that specific data will vary depending upon the size of break, location of the break, initial plant conditions, and automatic and/or manual actions that are assumed to occur during event progression. Specific data for the PSL reactors is contained in Chapter 15 of the Final Updated Safety Analysis Report (FUSAR) for each Unit where several ESDE scenarios are analyzed to verify acceptability of plant performance in accordance with various accident analysis criteria.

Operators must remain aware of subsequent concerns, however, that are created by the need to maximize boration during a severe ESDE. Unlike LOCA and SGTR where fluid mass leaks from the RCS, the apparent inventory loss during an ESDE is due to shrinkage from the excessive cooldown. Thus, maximizing charging and safety injection may result in excess inventory, possible filling of the pressurizer, and subsequent PTS concerns. That is, if RCS temperatures are not effectively stabilized following initial cooldown, the ensuing heatup and fluid expansion may result in a significant pressure excursion which should exceed the maximum subcooling limit curve.

The second major recovery action, therefore, includes steps to maintain RCS Heat Removal and stabilize temperatures by steaming the unisolated SG, throttling or terminating High Pressure Safety Injection (HPSI) pumps one at a time if certain, specific termination criteria are satisfied, and ensuring that RCS pressure control is such that subcooling does not exceed the maximum subcooling curve.

- Operators are directed to place Hydrogen Recombiners and possibly the Hydrogen Purge System into service if any of the appropriate conditions specified in Appendix M of EOP-99 exists. Although hydrogen is not flammable until it reaches a concentration of approximately 4% (in dry air), it is prudent to reduce hydrogen to as low a concentration as possible, i.e., less than the minimum detectable concentration of approximately 0.5%. This action minimizes the possibility of reaching the flammability limit and of forming pockets of high concentration hydrogen.

  When containment spray (CS) is actuated, hydrogen may be generated by the reaction of boric acid (from spray flow) with aluminum and zinc metals in the Containment. The reaction rates will be a function of temperature. Therefore, if the CS System has been spraying boric acid onto zinc and aluminum surfaces in a high temperature environment, conditions may exist for generation of a detectable hydrogen concentration in the Containment.

Written Examination
Question Worksheet

| Examination Outline Cross-reference: | Level | RO | SRO |
|---|---|---|---|
| | Tier # | 2 | |
| | Group # | 1 | |
| | K/A # | A2.12 | |
| | Importance Rating | 3.1 | |

059 Main Feedwater Ability to (a) predict the impacts of the following malfunctions or operations on the MFW; and (b) based on those predictions, use procedures to correct, control, or mitigate the consequences of those malfunctions or operations: Failure of feedwater regulating valves.

Proposed Question: RO 46

Unit 2 is performing a rapid downpower due to condenser vacuum problems. The NPO notifies the control room that there is a large instrument air leak at the "B" feed station on the 62' elevation. The following annunciators are locked in:

- G-15, "FW REG VALVE SUPPLY AIR PRESS LOW"
- G-9, "2B S/G LEVEL HIGH / LOW"

If the downpower continues and no operator action is taken, which one of the following describes the level trend of the 2B Steam generator?

2B Steam Generator level is trending:

A. high due to the MFRV failing as is.

B. low due to the MFRV failing closed.

C. high due to the MFRV failing open.

D. low due to the MFRV failing as is.

Proposed Answer: A

Explanation (Optional):
A. Correct
B. MFRVs fail as is, level would go high
C. Correct trend, incorrect failure mode
D. Correct failure mode, incorrect trend

Technical Reference(s): 0711301 (Attach if not previously provided)

Proposed references to be provided to applicants during examination: _____

Learning Objective: 0702301-8 (As available)

Question Source: Bank # 2011
Modified Bank # _____ (Note changes or attach parent)
New _____

Question History: Last NRC Exam _____

Written Examination
Question Worksheet

| | | |
|---|---|---|
| Question Cognitive Level: | Memory or Fundamental Knowledge | _____ |
| | Comprehension or Analysis | x |
| 10 CFR Part 55 Content: | ` 5 | |
| | 55.43 _____ | |

Comments: Cleaned up exam bank question.

During normal operation, the feedwater heater vents function to remove the noncondensible gases from the heaters. Refer to Figure 8. Each FW heater has two sets of vents, atmospheric startup vents and operating vents. Each operating vent runs directly to the main condenser. The atmospheric start up vents are opened to provide uniform warm-up throughout the FW heater.

## MSR Quench Water

Feedwater is supplied to the tube side drain of the MSRs as they enter the #5 Heater to prevent flashing of the cascading drain to FW Heaters 5A and 5B. Refer to Figure 24. The feedwater is supplied from the feedwater system downstream of the feedwater pump discharge off a drain connection on the tube side of feedwater heaters 5A and 5B.

## Feedwater Flow Control

The MFW pumps supply water to the SGs at high pressure. Flow control, consisting of the feedwater regulating valve and SG level control system, feedwater regulating valve bypass valves, and feedwater isolation valves, is maintained by operation of these valves under varying plant conditions. Refer to SG and FWCS text, 0711408 for more detail.

## Main Feedwater Regulating Valves

The main feedwater regulating valves (MFRVs), FCV-9011 and FCV-9021, are air piston-operated balanced plug globe valves. Refer to Figure 25. The cage assembly has slotted openings of varying widths around its circumference. As the piston moves upward to open the valve, less and less movement is required to increase flow. This type of valve gives accurate control at relatively large flow rates.

- MFRVs fail AS-IS on a loss of instrument air.
- MFRVs fail CLOSED on a loss of control power.
- The MFRVs shut on a turbine trip signal or a SG high level override signal of 82% [80%].

The MFRV design incorporates a hydraulic dampener that is mechanically linked to the valve stem. This dampener helps to limit valve closing time on a valve closure signal. This time is set for between 20 – 25 seconds for full closure from 100% power by adjustment of a needle valve on the valve actuator. Design closing time takes several requirements into consideration including:

# Single Question Report

**QID#:** 2011 **Objective:** 0000000-00 **System:** CD/FW
**Rev:** 0 **Cog Level:** 2 **KA #** 054.G.2.4.4 **RO** 3.3 **SRO** 3.6

During a Unit 2 rapid downpower the following annunciators were received:
- G-9 2B S/G Level High/Low
- G-15 'FW Reg.

Valve supply Air Press Low Instrument air has been lost to the 2B Main Feedwater Regulating Valve (MFRV)

Which of the following explains the 2B S/G level response as the downpower continues? (assume no Operator actions)

2B S/G level is trending:

A. high due the MFRV failing as is

B. high due to the MFRV failing open

C. low due to the MFRV failing closed

D. low due to the MFRV failing as is

**Reasons the choices are right or wrong.** **Correct answer is A.**

A. , feed flow will exceed steam flow during the downpower and level will increase.

B. MFRV fails as is

C. MFRV fails as is

D. level will be high,,

**Source Ref:** 0711408 Steam Generators and Feedwater control sys

**Open Ref:**

**Revision Notes:**

## Question Use History

HLC-16 PreAudit Quiz 7 (HLC-15 NRC), 0717018, 6/1/2004

HLC-15 RO NRC 2001, 0717003, 1/1/2001
HLC-15 SRO NRC 2001, 0717004, 1/1/2001

Written Examination
Question Worksheet

| Examination Outline Cross-reference: | Level | RO | SRO |
|---|---|---|---|
| | Tier # | 2 | |
| | Group # | 1 | |
| | K/A # | A1.01 | |
| | Importance Rating | 3.9 | |

061 Auxillary/Emergency Feedwater Ability to predict and/or monitor changes in parameters(to prevent exceeding design limits) associated with operating the AFW controls including: S/G level.

Proposed Question: RO 47

Unit 1 was at 100% power with 1C Auxiliary Feedwater pump out of service. A loss of offsite power occurred and all required equipment operated as expected. Operators took all required actions as necessary in EOP-01 to stabilize the plant and are now implementing EOP-09. Thirty minutes into the event, the following observation is made:

- 1A Steam Generator Level 25% NR and DECREASING
- 1B Steam Generator Level 34% NR and INCREASING
- No manipulations to Auxiliary Feedwater / AFAS have been made since EOP-01

Which one of the following describes the reason for the difference in Steam Generator levels / trends?

A. Feed flow to 1B S/G is much greater than feed flow to 1A S/G.

B. AFAS 1 was manually initiated, AFAS 2 automatically initiated.

C. Steam flow from 1A S/G is much greater than steam flow from 1B S/G.

D. AFAS 1 automatically initiated, AFAS 2 was manually initiated.

Proposed Answer: D

Explanation (Optional):

A. Plausible because level is higher in B
B. Reverse logic
C. Plausible because level is lower in A
D. Correct (AFAS reset defeated when manually initiated)

Technical Reference(s): 0711412 (Attach if not previously provided)

Proposed references to be provided to applicants during examination: _____

Learning Objective: 0711412-5 (As available)

Question Source: Bank # _____
Modified Bank # _____ (Note changes or attach parent)
New x

Question History: Last NRC Exam _____

Question Cognitive Level: Memory or Fundamental Knowledge _____
Comprehension or Analysis x

Written Examination
Question Worksheet

10 CFR Part 55 Content: 55.41 5
55.43 _____

Comments:

rupture identification circuit would block AFAS to the unisolated S/G that is being used for the cooldown and prevent it from automatically receiving AFW on an AFAS.

There are two methods to regain AFW flow to the intact S/G. One is to manually operate the individual component switches and the second is to manually initiate AFAS for that S/G. Guidance for manually initiating AFAS is given in the Licensed Operator Training Guidelines (0800004) for "EMERGENCY OPERATING PROCEDURES" which is partially reproduced below:

GUIDELINES FOR MANUAL AFAS INITIATION

The Conduct of Operations procedure (AP-0010120) provides guidance on when it is permissible to manually initiate AFAS. Manual initiation of AFAS defeats the Rupture Identification Circuitry and cycling features of AFAS. Three (3) situations are cited when manual initiation is permitted:

1. Automatic initiation did not occur after the time delay has elapsed.

2. The Rupture Identification Circuit has locked out the operable S/G while cooling down using one S/G.

3. During Loss of Off-Site Power scenarios, after AFAS actuation, when one header pressurizes before the second one causing an AFAS lockout of the second S/G. This assumes neither feed header is ruptured.

These guidelines do not prevent manually operating (starting, opening) individual components if deemed necessary.

To manually initiate AFAS on Unit 1, the AFAS actuation switches in the AFAS cabinet are used, for Unit 2, the Manual Initiation Switches on RTGB 202 are used.

a time delay. Thus, all four switches associated with AFAS-1(2) should be positioned to MANUAL for complete actuation and AFW flow will commence without delay. After the flow control valves have traveled to their full-open position, they can then be throttled to establish manual S/G level control. Since the switches de-energize the Initiation Relays directly (Figure 26), both the Fault/Rupture Identification and the Automatic Level Control features associated with that S/G will be overridden.

AFAS System behavior upon returning the RTGB-202 switches to AUTO will depend upon the status of S/G level and the Initiation Time Delay timer:

1. If 2/4 channels have sensed S/G level below the AFAS trip setpoint (≤ 19.5% NR), the timer has reached the end of the preset delay 235[210] seconds, and level has not been restored (≥29% NR ), AFW flow should continue uninterrupted. However, if manual-close operation had been used to move the flow control valves from their full open position, the valves will remain in the manual control mode. Automatic valve cycling operation will not be established until level is restored to the AFAS reset point.

2. If 2/4 channels have sensed S/G level below the AFAS trip setpoint, the timer has not yet reached the end of its preset delay, and level has not been restored, the Initiation, Interposing, and Cycling Actuation Relays will reenergize **causing the flow control valves to close**. The valves should reopen with automatic valve cycling control established when the timer completes counting.

3. If 3/4 channels sense S/G level above the AFAS Reset point, the Initiation, Interposing, and Cycling Actuation Relays will reenergize **causing the flow control valves to close**. Automatic valve cycling control will be in operation to cycle the valves with a time delay between the AFAS setpoint of 19.5% and the reset setpoint of 29%.

It should be noted that returning the RTGB-202 switches to AUTO will not reenergize the Lockout and Latching Actuation Relays. These relays can only be reset by depressing the ACTUATION RESET Pushbuttons at the AFAS Cabinets. This action must be taken if control of the flow control valves is desired.

Written Examination
Question Worksheet

| Examination Outline Cross-reference: | Level | RO | SRO |
|---|---|---|---|
| | Tier # | 2 | |
| | Group # | 1 | |
| | K/A # | K5.01 | |
| | Importance Rating | 3.6 | |

061 Auxillary/Emergency Feedwater Knowledge of the operational implications of the following concepts as the apply to the AFW: Relationship between AFW flow and RCS heat transfer.

Proposed Question: RO 48

A loss of offsite power occurred on Unit 2. All equipment operated as designed. Shortly after EOP-09 was entered, an RCS leak developed. The crew transitioned to EOP-03 with RCS Heat Removal as follows:

- Cooldown in progress at 78°F / hour
- Atmospheric Steam Dumps in AUTO/MANUAL with both S/Gs setpoint at 80% output
- Auxiliary Feedwater throttled after AFAS with flow at 200 gpm per S/G

Which one of the following describes the manual operator action that must be taken after automatic SIAS actuation to continue with the same cooldown rate?

A. Reduce flow on AFW header valves to obtain 200 gpm.

B. Increase output of ADVs to obtain 80%.

C. Increase flow on AFW header valve to obtain 200 gpm.

D. Reduce output of ADVs to obtain 80%.

Proposed Answer: A

Explanation (Optional):

A. Correct (AFW valves stroke fully open after loss of power and must be re-throttled)
B. ADVs stay in the same position they were prior to loss of power
C. Reverse of correct answer
D. ADVs stay in the same position they were prior to loss of power

Technical Reference(s): 0702412 (Attach if not previously provided)

Proposed references to be provided to applicants during examination: _____

Learning Objective: 0711412-5 (As available)

Question Source: Bank # _____
Modified Bank # _____ (Note changes or attach parent)
New x

Question History: Last NRC Exam _____

Question Cognitive Level: Memory or Fundamental Knowledge _____
Comprehension or Analysis x

Written Examination
Question Worksheet

10 CFR Part 55 Content: 55.41 5
55.43 _____

Comments:

COMPLICATED TRIP (LOSS OF OFF-SITE POWER)

Refer to Figure 30. The control circuits of the electric AFW Pumps have a 15 [30] second auto-start delay when the EDG breaker is closed. With the AFW Pump control switch in AUTO and the "Norm-Isol" switch in NORM, the diesel generator loading time delay device will start when the respective AFAS signal is present, the bus is energized and the EDG Breaker is closed.

As an example, assume a trip occurs with a Loss of Off-Site Power to both buses. The Emergency Diesels will start and power up the Safety Buses. This would occur before the AFAS timers time out. When the AFAS signal is received at the pump control circuit, its' diesel loading timer starts. At the end of 15 [30] seconds, the AFW pump will start. In the meantime, AFW Pump C should have started on the AFAS signal and the appropriate valves stroked open supplying AFW to the S/Gs.

For another example, assume a trip occurs, AFAS initiated, the operator secured AFW Pump C and throttled flow to the S/Gs on pumps A and B when a Loss of Off-Site Power occurs. Both electric pumps are load shed, so AFW flow is lost (remember the C pump is secured). When the EDG reenergizes the bus, the timer starts. At the end of the delay the electric Pumps would sequence back on. As an alternative, flow can be restored immediately by using the C pump.

Both of these examples are potential scenarios for an AFAS-1(2) d/p lockout to one of the S/Gs. A feedwater header d/p lockout can occur due to one header being pressurized before the other one. This can result from differences in equipment response times (i.e., valve stroke), differences in the sequence of events (i.e., AFAS-1 occurs before AFAS-2), loss of one offsite source vs. both, etc.

OPERATION OF REMOTE-MANUAL INITIATION SWITCHES (RTGB-202)

Each Remote-Manual Initiation Switch at RTGB-202 de-energizes the Initiation, Interposing, Lockout, and both the cycling and latching Actuation Relays for its respective channel without

Written Examination
Question Worksheet

| Examination Outline Cross-reference: | Level | RO | SRO |
|---|---|---|---|
| | Tier # | 2 | |
| | Group # | 1 | |
| | K/A # | K4.05 | |
| | Importance Rating | 2.7 | |

062 AC Electrical Distribution Knowledge of ac distribution system design feature(s) and/or interlock(s) which provide for the following: Paralleling of ac sources (synchroscope).

Proposed Question: RO 49

It is desired to synchronize 2B Emergency Diesel Generator to the grid for a surveillance run. Which of the following describes the conditions that are required to close the 2B Emergency Diesel Generator breaker successfully?

A. Incoming Voltage higher than running voltage / syncroscope moving slow in the FAST direction / close breaker just before it reaches 1200.

B. Running voltage higher than incoming voltage / syncroscope moving slow in the FAST direction / close the breaker when it reaches 1200.

C. Incoming Voltage higher than running voltage / syncroscope moving slow in the SLOW direction / close breaker just before it reaches 1200.

D. Running voltage higher than incoming voltage / syncroscope moving slow in the SLOW direction / close the breaker when it reaches 1200.

Proposed Answer: A

Explanation (Optional):

A. Correct
B. Voltage incorrect, sync scope correct, breaker closure position incorrect
C. Voltage correct, sync scope incorrect, breaker closure position incorrect
D. All three parameters incorrect

Technical Reference(s): 2-OSP-59.01B (Attach if not previously provided)

Proposed references to be provided to applicants during examination: _____

Learning Objective: 0702501-14 (As available)

Question Source: Bank # _____
Modified Bank # _____ (Note changes or attach parent)
New x

Question History: Last NRC Exam _____

Question Cognitive Level: Memory or Fundamental Knowledge x
Comprehension or Analysis _____

10 CFR Part 55 Content: 55.41 7
55.43 _____

Comments:

**6.1** Testing of the 2B Diesel Generator for Operability (continued) INITIAL

**CAUTION**

- Running the diesel with governor oil NOT visible in the sightglass (high or low) could result in loss of governor control.
- Synchronization or load changes shall not be performed with improper governor oil levels.

**NOTE**

To ensure proper governor oil level is maintained, notify Electrical Maintenance to add or drain oil as necessary.

**23.** VERIFY governor oil level is in the sight glass.

Governor Oil: 12 cylinder 16 cylinder

SAT _____ SAT _____
SNPO SNPO

RECORD volume if added:_____ ounces _____ ounces

**24.** §5 After engine starts, WALK DOWN both engines. Check for alarms, water and oil leaks, fan belt problems and any other abnormal conditions, including a change in noise, which could be indicative of a leak in the exhaust system. _____ SNPO

**25.** If operability testing of the 2B Diesel output breaker is required, Then PERFORM the following. If the 2B Diesel output breaker does not require testing, Then go to step 26.

**A.** CHECK voltage regulator and governor controls for operability by making a small change in the control signal to the diesel and verifying proper response. _____ RCO

**B.** INSERT the Sync Plug and PLACE in DG-2B. _____ RCO

**C.** ¶2,4 ENSURE incoming voltage is slightly higher than running voltage and that the Sync Scope is moving slowly in the fast direction. _____ RCO

/R2

**6.1** Testing of the 2B Diesel Generator for Operability (continued) INITIAL

**25.** (continued)

**CAUTION**
Failure to ensure the EDG assumes an initial load of at least 100 kW may result in a reverse power trip.

**D.** SLOW synch scope to no more than one (1) revolution per 60 seconds and CLOSE 2B Diesel output breaker (2-20401) just before it reaches 12 o'clock position. RECORD the time of the breaker closure in the Chronological log.

_____ RCO

**E.** If the 2B diesel output breaker fails to close, Then SLOW down the sync scope further or stop at the 12 o'clock position for approximately 5 seconds then attempt to close breaker.

_____ RCO

**NOTE**
- The Control Room kW chart recorder is the preferred means to accurately monitor EDG loading during surveillance.
- If WR-1616, DG Watts, recorder is NOT available, EDG 2B Watt meter on 2B EDG Local Control Panel shall be used.

**F.** DOCUMENT which indication will be used:

- WR-1616, DG Watts, located in the Control Room. _____ RCO

OR

- EDG 2B Watt meter on 2B EDG Local Control Panel. _____ RCO

**G.** §3 If anomalies occur, Then refer to Appendix B, EDG kW to Amps Comparison Chart, during loading evolutions.

_____ RCO

Written Examination
Question Worksheet

| Examination Outline Cross-reference: | Level | RO | SRO |
|---|---|---|---|
| | Tier # | 2 | |
| | Group # | 1 | |
| | K/A # | A4.01 | |
| | Importance Rating | 2.8 | |

063 DC Electrical Distribution Ability to manually operate and/or monitor in the control room: Major breakers and control power fuses.

Proposed Question: RO 50

It is desired to transfer the 2AB 125 VDC Bus from the 2B 125 VDC Bus to the 2A 125 VDC Bus.

Given the following steps:

4 1. Close the "A" side breakers
1 2. Place the AB Battery Charger on the 2AB 125 VDC Bus
3 3. Open the "B" side breakers
5 4. Place AB Battery Charger in standby
2 5. Raise the AB Battery Charger output to equalizing voltage

Which one of the following selections is the correct sequence for this transfer?

A. 2, 5, 3, 1, 4

B. 2, 3, 5, 4, 1

C. 4, 2, 5, 3, 1

D. 5, 2, 1, 3, 4

Proposed Answer: A

Explanation (Optional):

A. Correct
B. This will de-energize the B bus
C. This leaves the AB charger on equalize at the end of the evolution
D. This ties the A and B busses together and violates train separation

Technical Reference(s): 0711503 (Attach if not previously provided)

Proposed references to be provided to applicants during examination: _____

Learning Objective: 0702503-7 (As available)

Question Source: Bank # 2384
Modified Bank # _____ (Note changes or attach parent)
New _____

Question History: Last NRC Exam _____

Question Cognitive Level: Memory or Fundamental Knowledge _____

Written Examination
Question Worksheet

| | | |
|---|---|---|
| | Comprehension or Analysis | x |
| 10 CFR Part 55 Content: | 55.41 | 7 |
| | 55.43 | |

Comments:

**6.2** Transfer of 2AB Components From B Side To A Side — INITIAL

**1.** ENSURE Section 3.0, Prerequisites, are completed. _____

**2.** REVIEW Section 4.0, Precautions / Limitations. _____

**3.** VERIFY 2-HVE-37 Pass Room Fan status Running / NOT Running. _____

**4.** Remove the Vital AC SUPS Rectifier from service in accordance with Appendix A, Step 1. _____ SNPO

**5.** Remove the Fire and Security SUPS Rectifier from service in accordance with Appendix B, Step 1. _____ SNPO

**6.** TRANSFER DC Bus 2AB to DC Bus 2A:

**A.** Verify the 2A and / or the 2AA battery charger is supplying power to the 2A bus. _____ SNPO

**B.** Verify the 2B and / or 2BB battery charger is supplying power to the 2B bus. _____ SNPO

**C.** Verify 2AB battery charger is in hot standby mode: _____ SNPO

**1.** Verify CLOSED breaker 2-42413, AC supply to the 2AB Battery Charger (at 2AB 480V MCC).

**2.** Verify the ON / OFF switch on the 2AB Battery Charger front panel is in the ON position.

**3.** Verify the 2AB Battery Charger AC Input Breaker is ON.

**4.** Verify the 2AB Battery Charger DC Output Breaker is ON.

**5.** Verify the DC output voltage is 127V - 137V if in the float mode. If voltage is outside this range, Then immediately notify the US / NWE.

/R9

**6.2** Transfer of 2AB Components From B Side To A Side (continued) INITIAL

**6.** (continued)

**D.** Place the 2AB battery charger in the equalize mode by turning the equalizer timer to hold. _____ SNPO

> **NOTE**
> Battery charger trouble alarms (Ann. A20 and B20) may be received during the performance of steps 6.2.5.E through 6.2.5.K to no charge conditions on the respective side.

**E.** Close 2AB battery charger output breaker 2-60326. _____ SNPO

> **NOTE**
> DC amperage on the 2AB battery charger should increase. If not, open breaker 2-60326 and notify the US / NWE immediately for further instructions.

**F.** On RTGB 201, OPEN breaker 2-60333, tie 2AB/2B. _____

**G.** On RTGB 201, OPEN breaker 2-60243, tie 2B/2AB. _____

**H.** On RTGB 201, CLOSE breaker 2-60143, tie 2A/2AB. _____

**I.** On RTGB 201, CLOSE breaker 2-60335, tie 2AB/2A. _____

**J.** On the 2AB battery charger turn the equalizer timer to the zero (0) position. _____ SNPO

**K.** If the 2A and / or 2AA battery chargers are carrying some load, Then OPEN the 2AB battery charger output breaker 2-60326. _____ SNPO

> **NOTE**
> No battery charger alarms should be in after completion of step 6.2.5.K.

**7.** VERIFY annunciator B-60, Emerg 125V DC/4.16KV/480V AB Buses Misaligned, is ALARMED. _____

RO 50

# Single Question Report

**QID#:** 2384 **Objective:** 0702503-07 **System:** 125 VDC
**Rev:** 0 **Cog Level:** 2 **KA #** 064.K4.02 **RO** 2.9 **SRO** 3.2

Unit 2 was operating at 100% power. The Desk RCO is directed to transfer the 2AB 125 VDC Bus from the 2B 125 VDC Bus to the 2A 125 VDC Bus. Given the following steps:

- 1. Close the "A" side breakers
- 2. Place the AB Battery Charger on the 2AB 125 VDC Bus
- 3. Open the "B" side breakers
- 4. Place AB Battery Charger in standby
- 5. Raise the AB Battery Charger output to equalizing voltage

Which one of the following selections is the correct sequence for this transfer?

A. 2, 5, 3, 1, 4

B. 3, 2, 5, 4, 1

C. 4, 2, 5, 3, 1

D. 5, 2, 1, 3, 4

**Reasons the choices are right or wrong.** **Correct answer is A.**

A. Correct:

B. Incorrect: This will deenergize the AB bus Plausible: If the candidate does not understand the sequencing.

C. Incorrect: This sequence leaves the AB charger set to the equalizing voltage at the end of the transfer Plausible: This will physically work - but...it fails to leave the bus in an operable situation - equalizing the Battery makes the battery inoperabl

D. Incorrect: This ties the A and B DC buses together - violates train separation Plausible: This will physically work - but it violates Tech Specs

**Source Ref:** 1. 0711503 pages KA SYS 063 DC Electrical Distribution System K4 Knowledge of DC electrical system design feature(s) and/ or interlock(s) which provide for the following: K4.01 Manual/automatic transfers of control 2.7 3.0* (CFR: 41.7) Objective 070250

**Open Ref:**

**Revision Notes:** CAR 7/06

## Question Use History

HLC-16 Company Audit RO Exam, 0720232, 7/15/2004

Written Examination
Question Worksheet

| Examination Outline Cross-reference: | Level | RO | SRO |
|---|---|---|---|
| | Tier # | 2 | |
| | Group # | 1 | |
| | K/A # | K4.02 | |
| | Importance Rating | 3.9 | |

064 Emergency Diesel Generator Knowledge of ED/G system design feature(s) and/or interlock(s) which provide for the following: Trips for ED/G while operating (normal or emergency).

Proposed Question: RO 51

A loss of offsite power has occurred on Unit 2. Both Emergency Diesel Generators successfully started and loaded on their respective busses. The 2B CCW Pump failed to start as expected and when the operators attempted to manually start the pump, the 2B Emergency Diesel Generator tripped. Which one of the following annunciators can the SNPO expect to find locked in at the local control panel?

A. 8-1, "GENERATOR Δ CURRENT TRIP"

B. 7-4, "GENERATOR LOSS OF EXCITATION TRIP"

C. 7-2, "GENERATOR OVERCURRENT TRIP"

D. 7-3, "GENERATOR REVERSE POWER TRIP"

Proposed Answer: A

Explanation (Optional):

A. Correct (one of two trips operable on auto start)
B. Electrical trip, bypassed on auto start
C. Electrical trip, bypassed on auto start
D. Electrical trip, bypassed on auto start

Technical Reference(s): 0711501 (Attach if not previously provided)

Proposed references to be provided to applicants during examination: _____

Learning Objective: 0702501-18 (As available)

Question Source: Bank # _____
Modified Bank # _____ (Note changes or attach parent)
New x

Question History: Last NRC Exam _____

Question Cognitive Level: Memory or Fundamental Knowledge x
Comprehension or Analysis _____

10 CFR Part 55 Content: 55.41 7
55.43 _____

Comments:

## ABNORMAL OPERATION

ONP 1[2]-0910054, Loss of a Safety Related AC Bus, provides direction for attempting to recover from loss of 4.16 kV safety-related power.

**EDG Lockout [and Shutdown] Relay**

If the diesel is operating in the normal (surveillance) mode and one of the eight following conditions occurs, the EDG Lockout Relay will energize to give a lockout. The acronym, "**COREWOOD**" may help in memorizing this list:

- **C**rankcase pressure high at >1" $H_2O$
- **O**il pressure low at <17 [20] psig (Engine oil pressure)
- **R**everse power (Generator motoring)
- **E**xcitation low (Loss of generator field)
- **W**ater temperature high at >205°F
- **O**ver-current
- **O**ver-speed*** at 1040 [1035] rpm
- **D**ifferential current*** (Current imbalance between the generator and load side of the output breaker)

*** Still Enabled Following Emergency Start

**Note**: The "Fail-To-Start" Relay will actuate the Lockout Relay [Shutdown Relay] of the EDG, even in the emergency mode.

The Lockout Relay trips the EDG to prevent further operation, even in emergency mode, and **alarms** on the local EDG control panel and in the control room.

- To clear a lockout under normal operation, **the condition that caused it must be cleared AND the Lockout Relay on the local EDG control panel must be reset.**

- If the Lockout Relay has already actuated and an emergency start is present, the Lockout Relay must still be reset to start the EDG. **Emergency operation will remove most input signals, but does NOT block the "Fail-To-Start" Relay**.

| REVISION: | PROCEDURE TITLE: | PANEL: |
|---|---|---|
| 0 | ANNUNCIATOR RESPONSE PROCEDURE | B |
| PROCEDURE NO: | 2B EDG PANEL | WINDOW: |
| 2-ARP-06-B29 | ST. LUCIE UNIT 2 | 8-1 |

## ANNUNCIATOR PANEL B

| | | | |
|---|---|---|---|
| 1-1 | 1-2 | 1-3 | 1-4 |
| 2-1 | 2-2 | 2-3 | 2-4 |
| 3-1 | 3-2 | 3-3 | 3-4 |
| 4-1 | 4-2 | 4-3 | 4-4 |
| 5-1 | 5-2 | 5-3 | 5-4 |
| 6-1 | 6-2 | 6-3 | 6-4 |
| 7-1 | 7-2 | 7-3 | 7-4 |
| 8-1 | 8-2 | 8-3 | 8-4 |
| 9-1 | 9-2 | 9-3 | 9-4 |
| 10-1 | 10-2 | 10-3 | 10-4 |
| 11-1 | 11-2 | 11-3 | 11-4 |
| 12-1 | 12-2 | 12-3 | 12-4 |

**GENERATOR**
**Δ CURRENT**
**TRIP** **8-1**

| DEVICE: | LOCATION: | SETPOINT: |
|---|---|---|
| 87X/956 | 2B EDG Control Panel | Energized |
| 87/955 (DG-NA) | 2B EDG Control Panel | Energized |
| 87/955 (DG-NB) | 2B EDG Control Panel | Energized |
| 87/955 (DG-NC) | 2B EDG Control Panel | Energized |

**ALARM CONFIRMATION:**
1. Lockout Relay in the TRIPPED (10 o'clock) position.
2. Lockout Relay blue indicating light is NOT LIT.
3. **ANY** of the following relay targets dropped on 2B EDG Control Panel:
   - AA, Gen Differential.
   - BA, Gen Differential.
   - CA, Gen Differential.

**OPERATOR ACTIONS:**
1. ENSURE 2B EDG is TRIPPED.
2. VERIFY the Lockout Relay in the TRIPPED (10 o'clock) position.
3. VERIFY Lockout Relay blue indicating light is NOT LIT.
4. NOTIFY the Control Room of the alarmed condition.
5. CHECK 2B EDG for signs of damage.

**CAUSES:** This annunciator may be caused by a phase to phase or generator to bus fault between the Diesel Generator and the associated bus. An instrumentation malfunction may also be the cause.

**REFERENCES** 1. CWDs 2998-B-327 sheets 964, 965, 966, 971 and 1129

| REVISION: | PROCEDURE TITLE: | PANEL: |
|---|---|---|
| 0 | ANNUNCIATOR RESPONSE PROCEDURE | B |
| PROCEDURE NO: | 2B EDG PANEL | WINDOW: |
| 2-ARP-06-B26 | ST. LUCIE UNIT 2 | 7-2 |

## ANNUNCIATOR PANEL B

| | | | |
|---|---|---|---|
| 1-1 | 1-2 | 1-3 | 1-4 |
| 2-1 | 2-2 | 2-3 | 2-4 |
| 3-1 | 3-2 | 3-3 | 3-4 |
| 4-1 | 4-2 | 4-3 | 4-4 |
| 5-1 | 5-2 | 5-3 | 5-4 |
| 6-1 | 6-2 | 6-3 | 6-4 |
| 7-1 | 7-2 | 7-3 | 7-4 |
| 8-1 | 8-2 | 8-3 | 8-4 |
| 9-1 | 9-2 | 9-3 | 9-4 |
| 10-1 | 10-2 | 10-3 | 10-4 |
| 11-1 | 11-2 | 11-3 | 11-4 |
| 12-1 | 12-2 | 12-3 | 12-4 |

**GENERATOR OVERCURRENT TRIP** **7-2**

| DEVICE: | LOCATION: | SETPOINT: |
|---|---|---|
| 51VX/966 | 2B EDG Control Panel | Energized |
| 51V-NA relay | 2B EDG Control Panel | Energized (0.2 sec time delay) |
| 51V-NB relay | 2B EDG Control Panel | Energized (0.2 sec time delay) |
| 51V-NC relay | 2B EDG Control Panel | Energized (0.2 sec time delay) |

**ALARM CONFIRMATION:**

1. **ANY** of the following relay targets dropped on 2B EDG Control Panel:
   - ATA, Overcurrent W/Volt Restraint.
   - BTA, Overcurrent W/Volt Restraint.
   - CTA, Overcurrent W/Volt Restraint.

**OPERATOR ACTIONS:**

1. If 2B EDG was manually started, Then PERFORM the following:
   A. ENSURE 2B EDG is TRIPPED.
   B. VERIFY the Lockout Relay in the TRIPPED (10 o'clock) position.
   C. VERIFY Lockout Relay blue indicating light is NOT LIT.
2. If 2B EDG started automatically, Then MONITOR the following indicators:
   - AC Ammeter indicates 0 amps.
   - AC Voltmeter Gen indicates 0 volts.
   - AC Voltmeter Bus indicates 0 volts.
   - Wattmeter indicates 0 KW.
3. NOTIFY the Control Room of the alarmed condition.

**CAUSES:** This annunciator may be caused by excessive voltage on the exciter, excessive DC field excitation or other exciter malfunction. An instrumentation malfunction may also be the cause.

**REFERENCES** 1. CWDs 2998-B-327 sheets 964, 965, 966, 971 and 1129

| REVISION: | PROCEDURE TITLE: | PANEL: |
|---|---|---|
| 0 | ANNUNCIATOR RESPONSE PROCEDURE | B |
| PROCEDURE NO: | 2B EDG PANEL | WINDOW: |
| 2-ARP-06-B28 | ST. LUCIE UNIT 2 | 7-4 |

## ANNUNCIATOR PANEL B

| | | | |
|---|---|---|---|
| 1-1 | 1-2 | 1-3 | 1-4 |
| 2-1 | 2-2 | 2-3 | 2-4 |
| 3-1 | 3-2 | 3-3 | 3-4 |
| 4-1 | 4-2 | 4-3 | 4-4 |
| 5-1 | 5-2 | 5-3 | 5-4 |
| 6-1 | 6-2 | 6-3 | 6-4 |
| 7-1 | 7-2 | 7-3 | 7-4 |
| 8-1 | 8-2 | 8-3 | 8-4 |
| 9-1 | 9-2 | 9-3 | 9-4 |
| 10-1 | 10-2 | 10-3 | 10-4 |
| 11-1 | 11-2 | 11-3 | 11-4 |
| 12-1 | 12-2 | 12-3 | 12-4 |

**GENERATOR LOSS OF EXCITATION TRIP** 7-4

| DEVICE: | LOCATION: | SETPOINT: |
|---|---|---|
| 40X/966 | 2B EDG Control Panel | Energized |
| 40/965 (40 relay) | 2B EDG Control Panel | Energized |

**ALARM CONFIRMATION:**

1. Loss of Excitation (40) relay target dropped on 2B EDG Control Panel.

**OPERATOR ACTIONS:**

1. If 2B EDG was manually started, Then PERFORM the following:
   A. ENSURE 2B EDG is TRIPPED.
   B. VERIFY the Lockout Relay in the TRIPPED (10 o'clock) position.
   C. VERIFY Lockout Relay blue indicating light is NOT LIT.
2. If 2B EDG started automatically, Then MONITOR the following indicators:
   - AC Ammeter.
   - AC Voltmeter.
   - Wattmeter.
   - Exciter Ammeter.
   - Exciter Voltmeter.
3. NOTIFY the Control Room of the alarmed condition.

**CAUSES:** This annunciator may be caused by loss of voltage on the exciter, loss of DC field excitation or other exciter malfunction. An instrumentation malfunction may also be the cause.

**REFERENCES:** 1. CWDs 2998-B-327 sheets 964, 965, 966, 971 and 1129

| REVISION: | PROCEDURE TITLE: | PANEL: |
|---|---|---|
| 0 | ANNUNCIATOR RESPONSE PROCEDURE | B |
| PROCEDURE NO: | 2B EDG PANEL | WINDOW: |
| 2-ARP-06-B27 | ST. LUCIE UNIT 2 | 7-3 |

## ANNUNCIATOR PANEL B

| | | | |
|---|---|---|---|
| 1-1 | 1-2 | 1-3 | 1-4 |
| 2-1 | 2-2 | 2-3 | 2-4 |
| 3-1 | 3-2 | 3-3 | 3-4 |
| 4-1 | 4-2 | 4-3 | 4-4 |
| 5-1 | 5-2 | 5-3 | 5-4 |
| 6-1 | 6-2 | 6-3 | 6-4 |
| 7-1 | 7-2 | 7-3 | 7-4 |
| 8-1 | 8-2 | 8-3 | 8-4 |
| 9-1 | 9-2 | 9-3 | 9-4 |
| 10-1 | 10-2 | 10-3 | 10-4 |
| 11-1 | 11-2 | 11-3 | 11-4 |
| 12-1 | 12-2 | 12-3 | 12-4 |

**GENERATOR REVERSE POWER TRIP** 7-3

| DEVICE: | LOCATION: | SETPOINT: |
|---|---|---|
| 32X/966 | 2B EDG Control Panel | Energized |
| 32/965 | 2B EDG Control Panel | Energized |

**ALARM CONFIRMATION:**
1. Reverse Power (32) relay target dropped on 2B EDG Control Panel.
2. AC Ammeter indicates 0 amps.
3. AC Wattmeter indicates 0 KW.

**OPERATOR ACTIONS:**
1. ENSURE 2B EDG is TRIPPED.
2. VERIFY the Lockout Relay in the TRIPPED (10 o'clock) position.
3. VERIFY Lockout Relay blue indicating light is NOT LIT.
4. NOTIFY the Control Room of the alarmed condition.

**CAUSES:** This annunciator may be caused by improper unloading of the EDG or failure of the EDG governor for either engine. An instrumentation malfunction may also be the cause.

**REFERENCES** 1. CWDs 2998-B-327 sheets 965, 966, 971 and 1129

16. Given a set of initial control room and/or local indications, determine if the diesel generator is ready-to-start.

17. Predict the response of the diesel generator to the following conditions:
    A. Loss of off-site power with no ESFAS (SIAS) start signal present.
    B. ESFAS (SIAS) start signal with no loss of off-site power.
    C. Concurrent loss of off-site power with an ESFAS (SIAS) start signal.
    D. Loss of off-site power to the plant with the diesel in the standby mode, which is followed 10 minutes later by an ESFAS (SIAS) start signal.
    E. Running a diesel generator surveillance with highly unstable system grid conditions.
    F. Running the diesel unloaded or low-loaded for extended periods of time.
    G. Lock-out on respective 4160 volt Bus associated with D/G.
    H. Trip signals while in emergency mode.

18. Describe the DG trips by:
    A. Listing all the diesel generator trips
    B. Stating the setpoint for each DG trip for each unit.
    C. Identifying the DG trips bypassed with an automatic start signal present.

19. Describe the differences between the Unit 1 and the Unit 2 Diesel Generator sets relating to the:
    A. Cooling system surge tank, heaters and fans.
    B. Isolation of DC control power.
    C. Local controls and indications.
    D. Local control modes including:
        1) Maintenance
        2) MCS Switch
        3) Local Start
        4) Control Room Inaccessibility Start
    E. Control room controls.
    F. Fuel oil tanks, flowpaths and valves.
    G. Lube oil pumps and flowpaths.
    H. Air start dryers.

Written Examination
Question Worksheet

| Examination Outline Cross-reference: | Level | RO | SRO |
|---|---|---|---|
| | Tier # | 2 | |
| | Group # | 1 | |
| | K/A # | A1.01 | |
| | Importance Rating | 3.2 | |

073 Process Radiation Monitoring Ability to predict changes in parameters (to prevent exceeding design limits) associated with operating the PRM system controls including: radiation levels

Proposed Question: RO 52

Which one of the following Unit 1 Letdown Monitor radiation trends would be indicative of fuel failure?

Iodine increase:

A. that remains significantly above prior levels during steady state operation.

B. concurrent with a gross activity increase during a plant load change.

C. that remains significantly above prior levels during a plant load change.

D. concurrent with a gross activity increase during steady state operation.

Proposed Answer: A

Explanation (Optional):

A. Correct
B. Indication of a crud burst
C. Correct monitor indication, plant condition incorrect
D. Correct plant condition, incorrect monitor indication

Technical Reference(s): 1-ONP-26.01 (Attach if not previously provided)

Proposed references to be provided to applicants during examination: _____

Learning Objective: _____ (As available)

Question Source: Bank # _____
Modified Bank # _____ (Note changes or attach parent)
New x

Question History: Last NRC Exam _____

Question Cognitive Level: Memory or Fundamental Knowledge x
Comprehension or Analysis _____

10 CFR Part 55 Content: 55.41 5
55.43 _____

Comments:

**4.4** Letdown Monitor (continued)

**INSTRUCTIONS** **CONTINGENCY ACTIONS**

**NOTE**

- Iodine increase that remains significantly above prior levels during steady state operation is indicative of fuel failure.
- Iodine increase concurrent with a Gross Activity increase during a plant load change is indicative of a crud burst.

**3.** If the affected monitor is functioning properly and indicates high activity, Then GO TO 1-ONP-01.06, Excessive RCS Activity.

**END OF SECTION 4.4**

Written Examination
Question Worksheet

| Examination Outline Cross-reference: | Level | RO | SRO |
|---|---|---|---|
| | Tier # | 2 | |
| | Group # | 1 | |
| | K/A # | K2.01 | |
| | Importance Rating | 2.7 | |

076 Service Water Knowledge of bus power supplies to the following: Service water

Proposed Question: RO 53

Unit 2 is at 100% power, steady state. An Equipment Clearance order is being executed to remove 2B Intake Cooling Water (ICW) pump from service for a motor inspection. It is desired to align 2C ICW pump to replace 2B. Which of the following describes the MINIMUM requirements to assure 2C ICW pump breaker will load on the 2B Emergency Diesel Generator in the event of a LOOP?

2C ICW pump:

A. must be aligned mechanically and electrically to the B side, 2B ICW pump breaker racked out.

B. must be aligned electrically to the B side, 2B ICW pump control switch in pull-to-lock.

C. must be aligned mechanically and electrically to the B side, 2B ICW pump control switch in pull-to-lock.

D. must be aligned electrically to the B side, 2B ICW pump breaker racked out.

Proposed Answer: B

Explanation (Optional):

A. Must be aligned electrically, breaker racked out incorrect
B. Correct
C. CCW pump criteria, not same for ICW
D. Alignment correct, pump breaker incorrect

Technical Reference(s): 0711313 (Attach if not previously provided)

Proposed references to be provided to applicants during examination: _____

Learning Objective: PSL OPS SYS 313-4 (As available)

Question Source: Bank # _____
Modified Bank # _____ (Note changes or attach parent)
New x

Question History: Last NRC Exam _____

Question Cognitive Level: Memory or Fundamental Knowledge x
Comprehension or Analysis _____

10 CFR Part 55 Content: 55.41 7
55.43 _____

Written Examination
Question Worksheet

Comments:

ICW pump 1[2]C can be aligned to either header A or B by opening the appropriate pump discharge header cross-connect valves, and can be electrically lined up to either the 1[2]A3 or 1[2]B3, 4.16 KV buses via the 1[2]AB Bus. This line-up provides system flexibility during failure, maintenance or testing of pumps 1[2] A or 1[2] B. The pump discharge header cross-connect valves are manual valves.

The flow through the heat exchangers is automatically controlled by air operated butterfly valves located at the outlet of each heat exchanger. These valves regulate sea water flow to maintain a constant water temperature at the outlet of the shell side of the heat exchanger. Each valve closure is limited to 25% [8%] from the fully closed position to prevent system damage.

## DETAILED DESCRIPTION

## COMPONENTS

### Intake Cooling Water Pumps

The three intake cooling water pumps are single stage, vertical, centrifugal pumps. The design capacity of each pump is 14,500 gpm at a discharge pressure of 56 psig. The design shutoff head of the ICW pumps is about 88 psig. The normal ICW header pressure ranges from 35-50 psig. The ICW pumps and motors are located in the intake structure area.

The ICW pump motors receive their power supply from separate emergency buses. This prevents a single bus failure from disrupting operation of the system.

| ICW Pump | 4160V Bus |
|---|---|
| 1A [2A] | 1A3 [2A3] |
| 1B [2B] | 1B3 [2B3] |
| 1C [2C] | 1AB [2AB] |

Auto-Start Capability of the C ICW Pump

The power supply for the C ICW pumps is the AB 4160V swing bus. The word swing implies that the AB 4160V bus can be aligned to the A or B side safety related buses

through key interlocked breakers. Normally the Unit 1 4160V AB bus is aligned to the "B" side 4160V safety related bus, while the Unit 2 4160V AB bus is aligned to the "A" side 4160 safety related bus. Reference Figure 12.
All Intake Cooling water pumps are equipped with "Pull-to-Lock" type control switches located on RTGB 102 [202]. These switches enable the operator to maintain positive control over the combination of pumps that are designed to be in operation during normal and emergency conditions. The idle pump switch (normally the 'C' pump) is administratively kept in the "Pull-to-Lock" position. Whenever the 'C' pump is being used to replace the 'A' or 'B' pump, it must be aligned electrically to the power source of the pump it is replacing and the idle pump's control switch must be in the "Pull-to-Lock" position. If these two conditions are met, the 'C' pump will have automatic start capability in the event of a Loss of Offsite Power. If either of these two conditions are not met, the 'C' pump will not start automatically, but can be started manually. The reason for this interlock is to prevent two ICW pumps from being loaded on the same Emergency Diesel Generator in the event of a Loss of Offsite Power.

## Lube Water Supplies

ICW pumps utilize a Cutlass rubber bearing design that requires a small portion of flow from the pump to provide lubrication to each bearing. Refer to Figures 4, 5, 6, 7 & 8.

### Component Cooling Water Heat Exchangers

The component cooling water heat exchangers 1[2] A and 1[2] B are single pass, counter flow tube and shell type heat exchangers.

Intake cooling water flows through the tube side and component cooling water flows through the shell side of the heat exchangers. To prevent tube damage due to water erosion, flow through the tube side should not exceed 17,000 gpm.

The ICW system is designed to supply sufficient cooling water to the component cooling water heat exchangers to fulfill the emergency requirements in the event of a design basis LOCA. Each component cooling water heat exchanger is capable of post-accident heat removal duty. Each essential header, with one intake cooling water pump operating, fulfills the requirements of one component cooling water heat exchanger during normal, shutdown and LOCA conditions.

Written Examination
Question Worksheet

| Examination Outline Cross-reference: | Level | RO | SRO |
|---|---|---|---|
| | Tier # | 2 | |
| | Group # | 1 | |
| | K/A # | K1.02 | |
| | Importance Rating | 2.7 | |

078 Instrument Air Knowledge of the physical connections and/or cause-effect relationships between the IAS and the following systems: Service Air.

Proposed Question: RO 54

Unit 1 is in mode 6, refueling in progress. Which one of the following describes the normal configuration of compressed air supply to containment in this plant condition?

Containment air is being supplied from:

A. crosstied instrument and station air headers supplied by the construction air compressors.

B. instrument air header ONLY being supplied by the 1C / 1D instrument air compressors.

C. station air header ONLY being supplied from the station air compressor.

D. instrument air header only being supplied by the Containment Instrument air Compressors.

Proposed Answer: A

Explanation (Optional):

A. Correct
B. Normal instrument air supply to Unit 2 containment
C. Station air compressor not used
D. Normal instrument air supply to Unit 1 containment

Technical Reference(s): 1-NOP-18.02 (Attach if not previously provided)

Proposed references to be provided to applicants during examination: _____

Learning Objective: 0702413-2 (As available)

Question Source: Bank # _____
Modified Bank # _____ (Note changes or attach parent)
New x

Question History: Last NRC Exam _____

Question Cognitive Level: Memory or Fundamental Knowledge x
Comprehension or Analysis _____

10 CFR Part 55 Content: 55.41 2, 9
55.43 _____

Comments:

Written Examination
Question Worksheet

**6.2** Cross-tie of Temporary Service Air to Containment Instrument Air System — INITIAL

**1.** COORDINATE with Project Services to route and connect hose (with installed check valve) from temporary service air distribution manifold to one of the following 2" spare Containment Instrument Air ring header connections:

CHECK (√) connection point used — (√)

- V18208 _____
- V18214 _____
- V18215 _____
- V18528 _____
- V18530 _____
- V182137 _____

**2.** VERIFY hose connecting temporary service air to containment instrument air has a check valve installed at the connection point to containment instrument air. _____

**3.** ENSURE hose connected in Step 6.2.1 is pressurized from temporary service air distribution manifold by OPENING local temporary distribution header valve. _____

**4.** OPEN _____ _____
fill in connection point from Step 6.2.1

**5.** NOTIFY the control room that Containment Instrument Air and temporary service air are now cross-tied and to document this in the following: _____

- RCO chronological log
- RCO Turnover Checksheet

**END OF SECTION 6.2**

Written Examination
Question Worksheet

| Examination Outline Cross-reference: | Level | RO | SRO |
|---|---|---|---|
| | Tier # | 2 | |
| | Group # | 1 | |
| | K/A # | 2.2.25 | |
| | Importance Rating | 3.2 | |

103 Containment Equipment Control / Knowledge of the bases in Technical Specifications for limiting conditions for operations and safety limits.

Proposed Question: RO 55

Which one of the following describes the Unit 1 Technical Specification design basis for containment pressure and the equipment that ensures the design bases is not exceeded?

A. Design pressure of 44 psig with two trains of Containment Spray and one train of Containment Cooling.

B. Design pressure of 41.6 psig with one train of Containment Spray and two trains of Containment Cooling.

C. Design pressure of 44 psig with one train of Containment Spray and one train of Containment Cooling.

D. Design pressure of 41.6 psig with two trains of Containment Spray and one train of Containment Cooling.

Proposed Answer: C

Explanation (Optional):

A. Correct design pressure, only one train of each needed
B. Tech Spec LCO requirement, not design basis, 41.6 is postulated MSLB pressure
C. Correct
D. Incorrect number of trains, incorrect pressure

Technical Reference(s): Unit 1 Technical Specifications (Attach if not previously provided)

Proposed references to be provided to applicants during examination: _____

Learning Objective: 0702600-3, _____ (As available)

Question Source: Bank # _____
Modified Bank # _____ (Note changes or attach parent)
New x

Question History: Last NRC Exam _____

Question Cognitive Level: Memory or Fundamental Knowledge x
Comprehension or Analysis _____

10 CFR Part 55 Content: 55.41 5, 7
55.43 _____

Comments:

Written Examination
Question Worksheet

**3/4.6 CONTAINMENT SYSTEMS** (continued)

**BASES** (continued)

**3/4.6.1 CONTAINMENT VESSEL** (continued)

**3/4.6.1.4 INTERNAL PRESSURE**

The limitations on containment internal pressure ensure that 1) the containment structural is prevented from exceeding its design negative pressure differential with respect to the annulus atmosphere of 0.70 psi and 2) the containment peak pressure does not exceed the design pressure of 44 psig during steam line break accident conditions.

The maximum peak pressure obtained from a steam line break accident is 41.6 psig. The limit of 2.4 psig for initial positive containment pressure will limit the total pressure to 44.0 psig which is the design pressure and is consistent with the accident analyses.

**3/4.6.1.5 AIR TEMPERATURE**

The limitation on containment air temperature ensures that the containment vessel temperature does not exceed the design temperature of 264°F during LOCA conditions. The containment temperature limit is consistent with the accident analyses.

**3/4.6.1.6 CONTAINMENT VESSEL STRUCTURAL INTEGRITY**

The limitation ensures that the structural integrity of the containment steel vessel will be maintained comparable to the original design standards for the life of the facility. Structural integrity is required to ensure that the vessel will withstand the maximum pressure of 39.6 psig in the event of the limiting design basis loss of coolant accident. A visual inspection in accordance with the Containment Leakage Rate Testing Program is sufficient to demonstrate this capability.

**3/4.6 CONTAINMENT SYSTEMS** (continued)

**BASES** (continued)

**3/4.6.2 DEPRESSURIZATION AND COOLING SYSTEMS**

**3/4.6.2.1 CONTAINMENT SPRAY AND COOLING SYSTEMS**

The OPERABILITY of the containment spray and cooling systems ensures that depressurization and cooling capability will be available to limit post-accident pressure and temperature in the containment to acceptable values. During a Design Basis Accident (DBA), at least one containment cooling train and one containment spray train are capable of maintaining the peak pressure and temperature within design limits. One containment spray train has the capability, in conjunction with the Spray Additive System, to remove iodine from the containment atmosphere and maintain concentrations below those assumed in the safety analyses. To ensure that these conditions can be met considering single-failure criteria, two spray trains and two cooling trains must be OPERABLE.

The 72 hour action interval specified in ACTION 1.a and ACTION 1.d, and the 7 day action interval specified in ACTION 1.b take into account the redundant heat removal capability and the iodine removal capability of the remaining operable systems, and the low probability of a DBA occurring during this period. The 10 day constraint for ACTIONS 1.a and 1.b is based on coincident entry into two ACTION conditions (specified in ACTION 1.c) coupled with the low probability of an accident occurring during this time. If the system(s) cannot be restored to OPERABLE status within the specified completion time, alternate actions are designed to bring the unit to a mode for which the LCO does not apply. The extended interval (54 hours) specified in ACTION 1.a to be in MODE 4 includes 48 hours of additional time for restoration of the inoperable CS train, and takes into consideration the reduced driving force for a release of radioactive material from the RCS when in MODE 3. With two containment spray trains or any combination of three or more containment spray and containment cooling trains inoperable in MODES 1, 2, or Mode 3 with Pressurizer Pressure $\geq$ 1750 psia, the unit is in a condition outside the accident analyses and LCO 3.0.3 must be entered immediately. In MODE 3 with Pressurizer Pressure < 1750 psia, containment spray is not required.

The specifications and bases for LCO 3.6.2.1 are consistent with NUREG-1432, Revision 0 (9/28/92), Specification 3.6.6A (Containment Spray and Cooling Systems; Credit taken for iodine removal by the Containment Spray System), and the plant safety analyses.

| Examination Outline Cross-reference: | Level | RO | SRO |
|---|---|---|---|
| | Tier # | 2 | |
| | Group # | 2 | |
| | K/A # | K4.03 | |
| | Importance Rating | 3.5 | |

001 / Control Rod Drive Knowledge of CRDS design feature(s) and/or interlock(s) which provide for the following: Rod control logic

Proposed Question: RO 56

Unit 2 is in Mode 2 with the following:

- 1 X $10^{-5}$% power
- CEA's are in manual sequential being withdrawn with CEA group 5 at 62 inches
- CEA #59 drops fully into the core

Which of the following interlocks will prevent continued CEA motion in manual sequential?

A. CEA withdrawal prohibit (CWP)

B. CEA motion inhibit (CMI)

C. Auto withdraw prohibit (AWP)

D. Power Dependent Insertion Limit (PDIL)

Proposed Answer: B

Explanation (Optional):

A. CWP is generated TMPL, LPD, High SUR, VHP
B. Correct
C. Auto CEA withdraw is not enabled at PSL
D. PDIL is not enabled until $10^{-4}$% power

Technical Reference(s): 0711405 CEDS (Attach if not previously provided)

Proposed references to be provided to applicants during examination: _____

Learning Objective: 0702405-10C (As available)

Question Source: Bank # 2003

Modified Bank # _____ (Note changes or attach parent)

New _____

Question History: Last NRC Exam _____

Question Cognitive Level: Memory or Fundamental Knowledge _____

Comprehension or Analysis X

10 CFR Part 55 Content: 55.41 7

55.43 _____

Comments:

RO 56

# Single Question Report

**QID#:** 2003 **Objective:** 0702405-10 **System:** CEDS
**Rev:** 0 **Cog Level:** 2 **KA #** 03.AA2.02 **RO** 2.7 **SRO** 2.8

Given:
- Unit 2 is in Mode 2,
- 1 x 10-5 % power.
- CEA's are in manual sequential being withdrawn with CEA group 5 at 62 inches withdrawn.
- CEA #59 drops fully into the core.

Which ONE of the following interlocks will prevent continued CEA motion in manual sequential?

A. CEA withdrawal prohibit (CWP)

B. CEA motion inhibit (CMI)

C. Auto Withdraw Prohibit (AWP)

D. Power Dependent Insertion Limit (PDIL)

**Reasons the choices are right or wrong.** **Correct answer is B.**

A. comes from RPS, not position CEA deviation

B. , due to CEA deviation from other CEA's

C. auto withdraw has been defeated at PSL, but annunciator still active

D. PDIL not active until 10-4% power,

**Source Ref:** 0711405 Control Element Drive system, 0702405-10 C

**Open Ref:**

**Revision Notes:**

## Question Use History

HLC-16 PreAudit Quiz 7 (HLC-15 NRC), 0717018, 6/1/2004

HLC-15 RO NRC 2001, 0717003, 1/1/2001
HLC-15 SRO NRC 2001, 0717004, 1/1/2001

Examination Outline Cross-reference:

| Level | RO | SRO |
|---|---|---|
| Tier # | 2 | |
| Group # | 2 | |
| K/A # | A1.04 | |
| Importance Rating | 3.9 | |

002 Reactor Coolant: Ability to predict and/or monitor changes in parameters (to prevent exceeding design limits) associated with operating the RCS controls including: Subcooling Margin.

Proposed Question: RO 57

Unit 2 has evacuated the Control Room. All Operator actions in the Control Room were performed prior to evacuation. A cooldown at the Remote Shutdown Panel is to be performed.

Which of the following states how RCS pressure is controlled and how subcooling is monitored?

A. Operate Auxiliary Spray valves and monitor subcooling using T-cold + $50^0$F and Pressurizer Pressure.

B. Operate Main Spray valves and monitor subcooling using T-hot and Pressurizer Pressure.

C. Operate Main Spray valves and monitor subcooling using T-cold + $50^0$F and Pressurizer Pressure

D. Operate Auxiliary Spray valves and monitor subcooling using T-hot and Pressurizer Pressure..

Proposed Answer: A

Explanation (Optional):

A. Correct
B. RCP's are stopped on control room evacuation. No Thot indication on remote shutdown panel
C. RCP's are stopped
D. No Thot indication on remote shutdown panel

Technical Reference(s): 2-ONP-100.02 Control Room Inaccessibility (Attach if not previously provided)

Proposed references to be provided to applicants during examination: _____

Learning Objective: 0702846 (As available)

Question Source: Bank # _____

Modified Bank # _____ (Note changes or attach parent)

New X

Question History: Last NRC Exam _____

Question Cognitive Level: Memory or Fundamental Knowledge X

Comprehension or Analysis _____

10 CFR Part 55 Content: 55.41 5

55.43 _____

Comments:

Unit 1 Remote Shutdown Panel has Main Spray capability and Unit 2 does not.

**6.1** Operator Actions (continued)

| INSTRUCTIONS | CONTINGENCY ACTIONS |
| --- | --- |
| **4.** <u>If</u> time permits <u>Then</u> PERFORM the following:<br>• TRIP the turbine<br>• STOP Main Feedwater Pumps<br>  • 2A Main Feedwater Pump<br>  • 2B Main Feedwater Pump<br>• CLOSE Main Feedwater Isolation Valves:<br>  • HCV-09-1A<br>  • HCV-09-1B<br>  • HCV-09-2A<br>  • HCV-09-2B<br>• TRIP the RCPs<br>• §3 CLOSE PORV Block Valves:<br>  • V1476<br>  • V1477<br>• CLOSE letdown isolation valves:<br>  • V2515<br>  • V2516<br>  • V2522 | |

**APPENDIX A**
**RCO A SUBSEQUENT ACTIONS**
(Page 5 of 5)

INITIAL

**NOTE**
A 6 second open stroke of the AFW flow control valves from the fully closed position is equivalent to approximately 150 gpm flow to the S/Gs.

**11.** CONTROL available AFW pumps and flow control valves to maintain at least one S/G Wide Range level greater than 40%. _____

**12.** MONITOR the following parameters:

- TI-1115-1, 2A1 Loop Cold Leg Temp, less than 540°F and slowly lowering. _____
- TI-1125-1, 2B1 Loop Cold Leg Temp, less than 540°F and slowly lowering. _____

**NOTE**
Subcool margin curve (Fig. 1) should be used with calculated RCS T-hot (T-cold + 50°F) and pressurizer pressure to determine subcooling.

**13.** ENSURE the RCS is between 20°F and 200°F subcooled per Figure 1, RCS Pressure / Temperature, utilizing PI-1107 or PI-1108, Pressurizer Pressure, and calculated RCS T-hot (Tcold +50°F). _____

**14.** INITIATE Data Sheet 3, RCS / S/G Parameters. _____

**15.** MAINTAIN plant in a stable configuration. _____

**16.** CONTINUE with the Operator Actions (Section 6.0) of this procedure. _____

**END OF APPENDIX A**

| Examination Outline Cross-reference: | Level | RO | SRO |
|---|---|---|---|
| | Tier # | 2 | |
| | Group # | 2 | |
| | K/A # | K2.02 | |
| | Importance Rating | 3.1 | |

011 Pressurizer Level Control: Knowledge of bus power supplies to the following: Pressurizer Heaters.

Proposed Question: RO 58

Unit 2 is operating at 100% power. Channel 'X' for Pressurizer Level control is selected when Pressurizer Level control channel 'Y' has failed LOW.

Which of the following states the current status of Pressurizer heaters and the actions necessary to regain some or all Pressurizer Heaters?

A. All heaters are off. Select 'Level' on Backup Interlock Bypass Keyswitch. Reset/Close on all 480V heater power supplies to regain all 'A' and 'B' Pressurizer Heaters.

B. Only the 'B' side Pressurizer heaters are de-energized. Select 'Level' on Backup Interlock Bypass Keyswitch. Close 'B' 4.16 KV heater transformer breaker on the 'B' side to regain all 'B' heaters.

C. All heaters are off. Select 'Level' on Backup Interlock Bypass Keyswitch. Reset/Close on all 'A' 480V heater power supplies to regain all 'A' heaters.

D. Only the 'B' side Pressurizer heaters are de-energized. Select 'Level' on Backup Interlock Bypass Keyswitch. Reset/Close on all 'B' 480V heater power supplies to regain all 'B' heaters.

Proposed Answer: C

Explanation (Optional):

A. 4.16 KV breaker is opened on B side and cannot be re-closed.
B. All heaters are de-energized
C. Correct
D. All heaters are de-energized

Technical Reference(s): 2-0120035 Pressurizer Pressure and Level (Attach if not previously provided)

0711206 Pressurizer Pressure and level lesson text

Proposed references to be provided to applicants during examination: _____

Learning Objective: 0702206-13 PSL NLI 206-4 (As available)

Question Source: Bank # _____
Modified Bank # _____ (Note changes or attach parent)
New X

Question History: Last NRC Exam _____

Question Cognitive Level: Memory or Fundamental Knowledge _____
Comprehension or Analysis X

10 CFR Part 55 Content: 55.41 7
55.43 _____

Comments:

## TABLE 2 - Non Selected Level Channel Failures

### NON-SELECTED LEVEL CHANNEL FAILS HIGH

AUTOMATIC RESPONSE TO FAILURE

- High/Low level alarm (+10% Deviation) [67%]
- Loss of low level heater cutoff protection from affected channel

PLANT RESPONSE TO FAILURE

- System remains stable

OPERATOR ACTION

- None required

### NON-SELECTED LEVEL CHANNEL FAILS LOW

AUTOMATIC RESPONSE TO FAILURE

- High/Low level alarm (-5% Deviation)
- Low/Low level alarm (28 [27]%)
- On Unit 1, opens all 480V heater power supply contactors if Low Level Cutout switch in BOTH or selected to failed channel [opens 4160V breaker on respective side and 480V power supply contactors on the other side]

PLANT RESPONSE TO FAILURE

- Pressurizer pressure decreases
- TM/LP trip at 1887 [1900] psia

OPERATOR ACTION

- On Unit 1, select operable channel on Low Level Cutout switch
- [On Unit 2, select LEVEL on the Backup Interlock Bypass Keyswitch]
- Reset/Close 480V heaters as necessary

**7.2** Subsequent Operator Actions (continued)

| INSTRUCTIONS | CONTINGENCY ACTIONS |
|---|---|
| **2.** (continued) | **2.** (continued) |

**NOTE**

With less than 27% level on Channel X, the "A" pressurizer heater transformer feeder breaker (2-20204) trips and the "B" side 480V power supplies deenergize. With less than 27% level on Channel Y, the "B" pressurizer heater transformer feeder breaker (2-20403) trips and the "A" side 480V power supplies deenergize. The backup interlock bypass keyswitch selected to the level position, allows the 480V heater power supplies to be reset.

**G.** Verify pressurizer level indicating controllers (selected and non-selected) are operating properly and power is available to pressurizer heaters.

**G.** If pressurizer heaters are deenergized or level indicating controller(s) failed, Then perform the following:

**1.** If either level control channel has failed, Then shift to the operable channel and reset heaters as follows:

**a.** Place the backup interlock bypass keyswitch (RTGB-203) to the LEVEL position. (This regains power to the proportional and backup heater banks controlled by the selected channel.)

**b.** Reset pressurizer heater banks as needed.

OR

## UNIT 1 SUMMARY OF PRESSURIZER LEVEL CONTROL ACTIONS

| PZR. LEVEL (ROUNDED) | AUTOMATIC ACTION |
|---|---|
| +10% DEVIATION | HIGH PRESSURIZER LEVEL ALARM (INCREASING) |
| +9% DEVIATION | MAXIMUM LETDOWN (128 GPM) (INCREASING) |
| +4% DEVIATION | • ALL HEATERS ON<br>• BOTH BACKUP CHARGING PUMPS RECEIVE STOP SIGNAL |
| 0% DEVIATION | NORMAL LEVEL (SETPOINT FROM RRS) |
| -1% DEVIATION | • MINIMUM LETDOWN (29 GPM) (DECREASING)<br>• FIRST B/U CHG. PUMP "STOP" SIGNAL (INCREASING) |
| -2% DEVIATION | • SECOND B/U CHG. PUMP "STOP" SIGNAL (INCREASING) |
| -3% DEVIATION | FIRST B/U CHG. PUMP "START" SIGNAL (DECREASING) |
| -4% DEVIATION | SECOND B/U CHG. PUMP "START" SIGNAL (DECREASING) |
| -5% DEVIATION | LOW PRESSURIZER LEVEL ALARM, ALL CHG. PUMPS GET BACKUP "START" SIGNAL (DECREASING) |
| 28 % INDICATED LEVEL | ALL PRESSURIZER HEATERS OFF (DECREASING) |

## UNIT 2 SUMMARY OF PRESSURIZER LEVEL CONTROL ACTIONS

| PZR. LEVEL (ROUNDED) | AUTOMATIC ACTION |
|---|---|
| 67% INDICATED LEVEL | HIGH PZR LEVEL ALARM (INCREASING) PACB ALARM |
| +9% DEVIATION | MAXIMUM LETDOWN (128 GPM) (INCREASING) |
| +5% DEVIATION | HIGH PZR LEVEL ALARM (INCREASING) RTGB 103 |
| +4% DEVIATION | • ALL HEATERS "ON" SIGNAL<br>• B/U CHG. "STOP" SIGNAL (INCREASING) |
| 0% DEVIATION | NORMAL LEVEL (SETPOINT FROM RRS) |
| -1% DEVIATION | • MINIMUM LETDOWN (29 GPM) (DECREASING)<br>• B/U CHG. PUMP "STOP" SIGNAL (INCREASING) |
| -3% DEVIATION | • B/U CHG. PUMP "START" SIGNAL (DECREASING) |
| -5% DEVIATION | LOW PRESSURIZER LEVEL ALARM, B/U CHG. PUMP GETS BACKUP "START" SIGNAL (DECREASING) |
| 27 % INDICATED LEVEL | WITH CHANNEL X <27%; "A" SIDE 4160V PZR HEATER X-FORMER FEEDER BKR TRIPS AND "B" SIDE HEATER POWER SUPPLY CONTACTORS OPEN.<br><br>WITH CHANNEL Y <27%; "B" SIDE 4160V PZR HEATER X-FORMER FEEDER BKR TRIPS AND "A" SIDE HEATER POWER SUPPLY CONTACTORS OPEN. |

| Examination Outline Cross-reference: | Level | RO | SRO |
|---|---|---|---|
| | Tier # | 2 | |
| | Group # | 2 | |
| | K/A # | K6.01 | |
| | Importance Rating | 2.9 | |

015 / Nuclear Instrumentation: Knowledge of the effect of a loss or malfunction on the following will have on the NIS: Sensors, detectors, and indications.

Proposed Question: RO 59

The following conditions exist:

- Unit 1 is at 100% power
- Linear Range Channel #10 is supplying RPS Power Ratio Calculator

Which of the following would be the system response if Channel 10 Upper detector failed HIGH?

A. Actual ASI as indicated on the Power Ratio Recorder would exceed the negative setpoint and an alarm would be generated.

B. The Lower setpoint for ASI as indicated on the Power Ratio Recorder would become more negative. No alarm would be generated.

C. Actual ASI as indicated on the Power Ratio Recorder would exceed the positive setpoint and an alarm would be generated.

D. The Upper setpoint for ASI as indicated on the Power Ratio Recorder would become more positive. No alarm would be generated.

Proposed Answer: A

Explanation (Optional):

A. Correct
B. Lower setpoint is from RPS linear range safety channels
C. ASI would become more negative
D. Upper setpoint is from RPS linear range safety channels

Technical Reference(s): 0711404 (Attach if not previously provided)

Proposed references to be provided to applicants during examination: _____

Learning Objective: PSL IL 404-17 Nuclear Instrumentation (As available)

Question Source:
Bank # _____
Modified Bank # _____ (Note changes or attach parent)
New X

Question History: Last NRC Exam _____

Question Cognitive Level:
Memory or Fundamental Knowledge _____
Comprehension or Analysis X

10 CFR Part 55 Content:
55.41 7
55.43 _____

Comments: 1998 NRC exam not in Bank

## POWER RATIO CALCULATOR

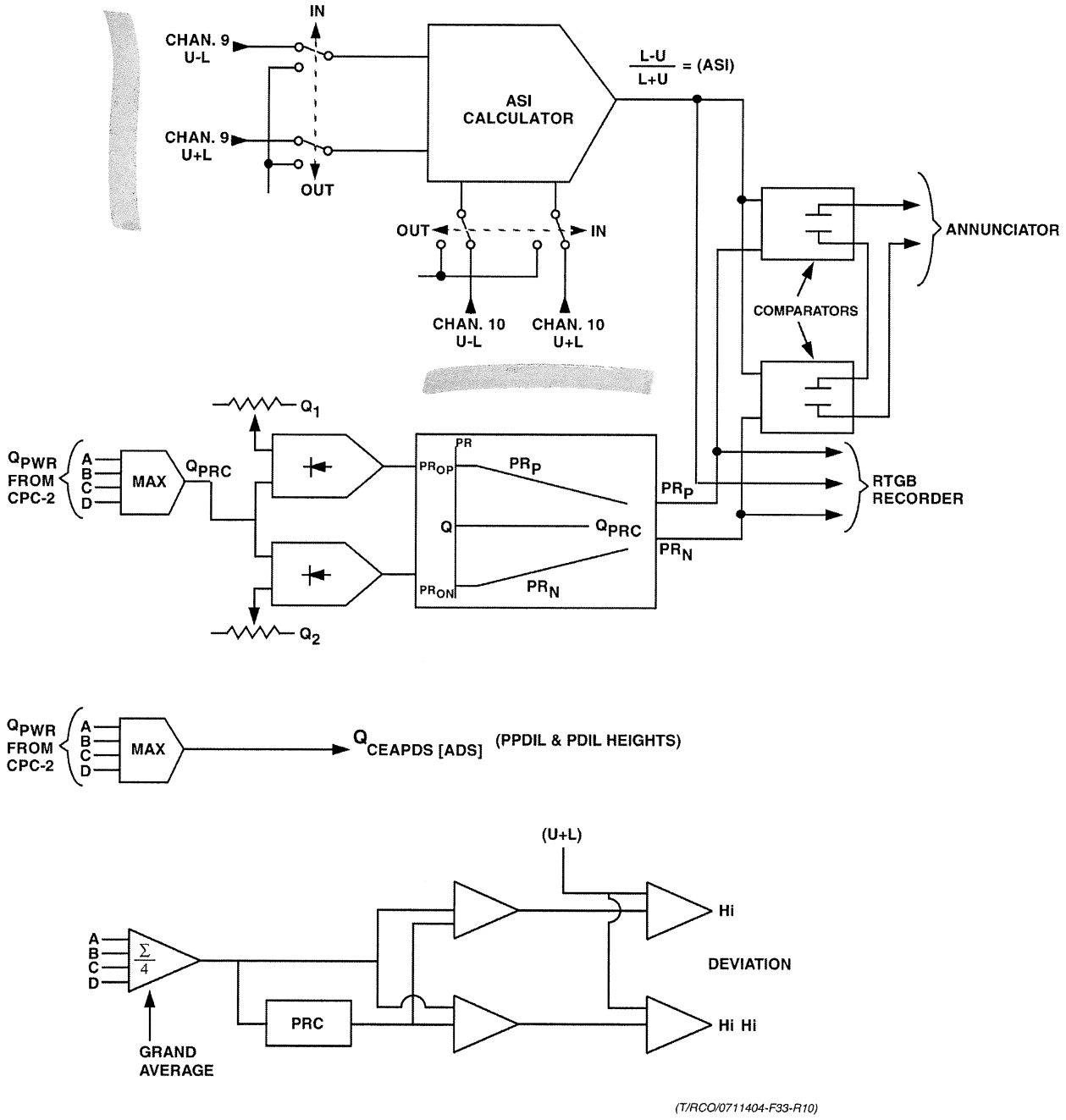


**FIGURE 21**

There are four basic parameters that affect the thermal margin to DNB:

- RCS pressure
- Flow
- Power
- Water temperature

Flow is always assumed to be 100% of design flow; if it isn't, the low flow trip will cause a trip. The water temperature is measured by the $T_{COLD}$ instruments and the highest $T_{COLD}$ signal is used (the higher the water temperature the closer you are to DNB). Since the DNB phenomenon occurs on the fuel cladding surface it is a local situation and therefore fuel power should be measured in a localized fashion. Local power cannot be directly measured with our RPS but by applying axial and radial correction factors to amplify the power signal Q we get a close approximation called $Q_{DNB}$. Increasing $Q_{DNB}$ puts you closer to DNB and trip.

**Power Ratio Calculator (PRC)**

The power ratio calculator provides three [two] functions:

1. HI and HI-HI channel deviation alarms setpoints calculation (Unit 1 Only)
2. Selection of the $Q_{CEAPDS\ [ADS]}$ signal from the maximum of four $Q_{pwr}$ CPC developed inputs for PPDIL & PDIL
3. The power ratio signal calculation to PRC recorder red blue, and green pens on RTGB104[204]

The power ratio calculator is located in the rear of RPS cabinet D. Input signals to the calculator are supplied from the following sources: (Refer to Figure 21.)

- the comparator averager (Unit 1)
- CPC-2 ($Q_{pwr}$) Channels A-D via isolation assemblies
- the two Linear Power Range Control Channels (nuclear power and axial flux imbalance).

The comparator averager (Unit 1 only) is located in the rear of RPS cabinet A and generates the "Grand Average" power signal. To generate the Grand Average, the

comparator averager receives four inputs one from each of the Linear Power Range Safety Channels which is the sum of the upper and lower subchannels. The Grand Average is then compared against both the output of each safety channel NI and the PRC. The PRC program will then set the Hi and HI-Hi deviation setpoints. Finally the Hi and HI-Hi setpoints are compared against the channel to average deviation to determine if alarms are required. Indication of deviation is alarmed on annunciator (L-20 Reactor Power Range Subchannel Deviation) and also indicated on the RPS cabinets via red alarm lites. An alarm reset push-button is provided on each RPS channel. These alarms would be used as indications of azimuthal flux tilt or channel failure.

If any one channel is out of service, its input can be bypassed using a channel disconnect switch located on the front of the comparator averager panel.

Four $Q_{power}$ signals from each channel's CPC-2 are fed into an auctioneering circuit which then sends the highest of these signals as $Q_{CEAPDS\ [ADS]}$ to the CEAPDS display unit [Analog Display System]. The $Q_{CEAPDS\ [ADS]}$ signal is used in the determination of the power dependent insertion limit (PDIL).

The power ratio signal (ASI) is defined as (L-U)/(L+U). The ASI calculator uses signals from NI channels 9 and 10, with the IN-OUT switch in the IN position, to determine the average ASI. If one channel is out of service, the IN-OUT switch is placed in OUT and the remaining channel is then used for determining the ASI. The highest of the four signals from CPC-2 is used in the calculation of the positive and negative ASI deviation limits ($PR_N$ and $PR_P$) which are based on the magnitude of the $Q_{PWR}$ input signal. The three output signals (ASI blue pen , $PR_N$ Green pen , and $PR_P$ red pen ) are recorded on a three pen recorder on RTGB 104 [204]. They are also sent to a comparator that will actuate an alarm if ASI goes outside the band.

## RPS CALIBRATION AND INDICATION PANEL (RPSCIP)

The RPSCIP interfaces with the trip units, Linear Power Range Safety Channel, TM/LP and LPD trip systems in the channel in which it is installed. Refer to Figure 22 for the following discussion.

### Nuclear PWR - ΔT Pwr (%) Meter

| Examination Outline Cross-reference: | Level | RO | SRO |
|---|---|---|---|
| | Tier # | 2 | |
| | Group # | 2 | |
| | K/A # | A3.01 | |
| | Importance Rating | 3.8 | |

029 / Containment Purge: Ability to monitor automatic operation of the Containment Purge System including: CPS isolation

Proposed Question: RO 60

Unit 1 is in Mode 6 moving recently irradiated fuel. Train 'A' Containment Purge system is in service. A spent fuel bundle is severely damaged while being withdrawn from the upender.

Containment Isolation Monitors indicate:

MA 85 Mr/Hr
MB 94 Mr/Hr
MC 80 Mr/Hr
MD 92 Mr/Hr

Which of the following describes the status of the Containment Purge system?

The Containment Purge system:

A. remains in its current configuration.

B. 'B' train starts and both trains are aligned to the Shield Building exhaust system.

C. suction is re-aligned to the refueling canal.

D. automatically isolates.

Proposed Answer: D

Explanation (Optional):

A. containment monitors are not set at 90MR unless recently irradiated fuel is being moved.
B. Shield Building fans start on Fuel Pool high radiation on 2/3 logic
C. Suction is already aligned to refueling canal during normal refueling operation.
D. Correct

Technical Reference(s): 1600030 Accidents involving New or Spent Fuel (Attach if not previously provided)

Proposed references to be provided to applicants during examination: _____

Learning Objective: 0702861-8 (As available)

Question Source: Bank # _____
Modified Bank # 928 (Note changes or attach parent)
New _____

Question History: Last NRC Exam _____

Question Cognitive Level: Memory or Fundamental Knowledge _____
Comprehension or Analysis X

10 CFR Part 55 Content: 55.41 7
55.43 _____

Comments: Refueling CIAS setpoint 90 Mr/Hr. CIAS 2/4 logic

RO 60

# Single Question Report

| | | | | |
|---|---|---|---|---|
| **QID#:** 928 | **Objective:** 0702861-08 | | **System:** ONP | |
| **Rev:** 0 | **Cog Level:** 2 | **KA #** 036AA1.01 | **RO** 3.3 | **SRO** 3.8 |

The following conditions exist on Unit 1:

- Mode 6
- Train "A" containment purge is in service with suction aligned to the refueling cavity.
- A fuel bundle has been damaged and bubbles are escaping from the refueling cavity.
- Containment Radiation level is 150 mR/hr.

Which ONE of the following describes the response of the Containment Purge System?

The Containment Purge System:

A. will automatically isolate.

B. remains in its current configuration.

C. suction is automatically aligned to the containment ring header.

D. discharge is automatically aligned to the Shield Building Exhaust System.

**Reasons the choices are right or wrong.** **Correct answer is A.**

A.

B.

C.

D.

**Source Ref:** 1-1600030 SF Cooling ONP

**Open Ref:**

**Revision Notes:** Fix Question !!! IPT2B K/A Fuel Handling IncidentsAbility to operate and / or monitor the following as they apply to the Fuel Handling Incidents: Reactor building containment purge ventilation system

## Question Use History

HLC17 SRO IPT Exam 2B, 00720245,
HLC17 SRO IPT Exam 2A, 0720242, 9/14/2005
HLC17 SRO IPT Exam 2B, 0720245,
HLC17 SRO IPT Exam 2A, 0720242, 9/14/2005

RO 60



**6.4** (continued) INITIAL

**5.** Pressurize the Containment Service Air Header by LOCKING OPEN the following valves:

- ¶5 V18794, Secondary Isolation Valve (Pen 8) for Service Air Supply to RCB _____
- ¶5 V18796, Primary Isolation Valve (Pen 8) for Service Air Supply to RCB _____

**CAUTION**

¶1 During normal conditions, V4111, Fuel Xfer Tube Penetr 25 Isol, should be opened by hand to prevent damaging the valve reach rod bushing. During off normal conditions, an air wrench may be used to expedite valve closure.

**6.** When transfer canal is empty and V4111, Fuel Xfer Tube Penetr 25 Isol is OPEN, Then notify Shift Director that fuel transfer flange may be removed. _____ SM / US

**7.** Notify I&C Department to reduce the CIS containment radiation monitor setpoints to 90 mr / hr. _____ SM / US

**8.** Notify Refueling Support Services (RSS) personnel to perform refueling equipment maintenance on refueling equipment in the lower cavity. _____

**9.** Log open containment penetrations on Data Sheet 1 of Appendix B, Open Penetration Log. _____

**10.** Consult with Operations Supervisor and Shift Director to determine the need and desirability of adjusting the containment purge valves jackscrews from the 40° open limit to the full open limit. If adjusting the jackscrews is desired, notify the I&C Valve Group. _____ SM / US

**7.0** OPERATOR ACTIONS

**7.1** Immediate Operator Actions

| INSTRUCTIONS | CONTINGENCY ACTIONS |
|---|---|
| **1.** Notify control room personnel of the accident. | |

**NOTE**
If damage to spent fuel occurred inside containment, a Containment Isolation Actuation Signal (CIAS) may occur.

**2.** If the accident occurred inside the Containment, Then:

**A.** Sound the Containment Evacuation alarm.

**B.** Evacuate the Containment.

**C.** Notify Health Physics to check personnel for contamination.

**NOTE**
The alpha radiation hazard associated with a damaged new fuel assembly will NOT cause actuation of the Area or Process Radiation Monitor high radiation alarms.

**3.** If the accident occurred in the Fuel Pool area, Then:

**A.** Evacuate the Fuel Pool area and remain on the landing outside the door.

**B.** Notify Health Physics to monitor personnel for contamination.

| Examination Outline Cross-reference: | Level | RO | SRO |
|---|---|---|---|
| | Tier # | 2 | |
| | Group # | 2 | |
| | K/A # | A4.05 | |
| | Importance Rating | 3.1 | |

041 Steam Dump/Turbine Bypass Control: Ability to manually operate and/or monitor in the control room: Main steam header pressure.

Proposed Question: RO 61

Unit 1 is experiencing a SGTR on the 1A SG and is cooling down with only SBCS PCV 8801 in manual, with the following:

- RCS pressure is 1710 psia
- RCS temperature is 524$^0$F
- SG pressures are 840 psia
- 1A SG Narrow Range level is 42%
- 1B SG Narrow Range level is 15%
- One RCP in each loop is operating

The cooldown has stopped at approximately 517$^0$F, RCS pressure at 1610 psia.

Which of the following is the most likely reason the cooldown has stopped?

A. MSIS has closed the MSIV's.

B. AFAS has stopped feeding both SG's.

C. Main Steam Pressure permissive has closed the SBCS PCV 8801.

D. RCP's are stopped due to loss of minimum subcooling.

Proposed Answer: C

Explanation (Optional):

A. MSIS would not occur until about 486$^0$F RCS temperature
B. 15% NR level AFW is required to be in service
C. Correct, SBCS permissive at 806 psia secondary pressure which is about 519$^0$F Tsat
D. RCS is >20$^0$F subcooled

Technical Reference(s): 1-EOP-04 SGTR (Attach if not previously provided)
0711406 SBCS

Proposed references to be provided to applicants during examination: _____

Learning Objective: 406 LPC Objective 12 (As available)

Question Source: Bank # _____
Modified Bank # _____ (Note changes or attach parent)
New X

Question History: Last NRC Exam _____

Question Cognitive Level: Memory or Fundamental Knowledge _____
Comprehension or Analysis X

10 CFR Part 55 Content: 55.41 7
55.43 _____

Comments:

- PIC-8010, when in manual, directly controls PCV-8805 and any other bypass valve that has an individual controller in AUTOMATIC, **provided the valve permissive and interlocks are satisfied**.

- While cooling down with the permissive switch in auto and M/A Station(s) in manual, the valve(s) will close when the 806 psia permissive is lost. Further cooldown using the SBCS will require placing the permissive switch in manual.

## SBCS TEST DRAWER

The SBCS test drawer is an integral part of the control system, as well as an accessory for testing. The test drawer contains equipment to convert the input current signals into appropriately scaled voltage signals used in the SBCS calculator. The drawer also contains the relays used in the internal logic and in the generation of binary outputs and signals. The layout of the test drawer is shown in Figure 3.

The SBCS test drawer provides distribution of AC power for the calculator, as well as, for the test drawer itself. DC Power is distributed to the valves' solenoids. The test features include:

- Simulated inputs for use in calibrating, testing, and troubleshooting the system
- Pushbutton signal selector switch
- Five test switches

  - **System Test Switch**
    Operate – Connects system inputs to outputs after time delay. In any position other than operate, SBCS is unavailable.

    Output Disconnect – Normal input processes are connected to the calculator but modulation and QO demand signals are not permitted to pass to output interface activation and annunciation of AWP is inhibited.

    Input Disconnect – In addition to above, connects a ground signal to input.

    Test – Enables the potentiometers to simulate input signals, enables the reactor trip test switch

  - **Valve Selector Switch**
    Facilitates application of a test signal to a particular valve to test output interface

**4.0 OPERATOR ACTIONS** (continued)

| INSTRUCTIONS | CONTINGENCY ACTIONS |
|---|---|
| * **9. Verify RCP Operating Limits**<br><br>If RCPs are RUNNING,<br>Then VERIFY RCP operating limits are satisfied.<br>**REFER TO** Table 13, RCP Operating Limits. | **9.1** STOP RCPs that do NOT satisfy operating limits. |

**CAUTION**

Operation of the 1C AFW Pump should be avoided to minimize direct releases to the environment. If motor driven AFW pumps are NOT available, steam from the least affected S/G should be used.

| | |
|---|---|
| ☐ **10. RCS Cooldown to less than 510°F**<br><br>Cooldown the RCS to $T_{HOT}$ less than 510°F using SBCS. | **10.1** COOLDOWN the RCS to $T_{HOT}$ less than 510°F using ADVs from **BOTH** S/Gs.<br><br>**10.2** If Instrument Air is NOT available, Then OPERATE ADVs locally.<br>**REFER TO** Appendix U, Local Operation of Unit 1 Atmospheric Dump Valves.<br><br>**10.3** COOLDOWN using 1C AFW Pump and alternate steaming flow paths on the unisolated S/G.<br>**REFER TO** Table 12, Alternate S/G Heat Removal Paths. |

**4.0 OPERATOR ACTIONS** (continued)

**INSTRUCTIONS** **CONTINGENCY ACTIONS**

**CAUTION**

When cooling down and depressurizing using only one S/G, AFW flow to the operable steam generator may be isolated by the AFAS rupture identification circuitry. Manual initiation of AFAS to the operable steam generator could be necessary.

**NOTE**

Cooldown rates up to 100°F in **ANY** 1 hour period are permitted to regain or maintain minimum subcooling.

☐ **27. RCS Cooldown (to SDC)**

COOLDOWN the RCS using SBCS:

**A.** If RCPs are OPERATING, Then COOLDOWN at a rate not to exceed 100°F in **ANY** 1 hour period.
**REFER TO** 1-GOP-305, Reactor Plant Cooldown – Hot Standby to Cold Shutdown.

**B.** If RCPs are NOT OPERATING, Then COOLDOWN at a rate not to exceed 30°F in **ANY** 1 hour period.
**REFER TO** ONP 1-0120039, Natural Circulation Cooldown.

**27.1** COOLDOWN the RCS using ADVs.

**27.2** If Instrument Air is NOT available, Then locally OPERATE the ADV on the unisolated S/G.
**REFER TO** Appendix U, Local Operation of Unit 1 Atmospheric Dump Valves.

**27.3** COOLDOWN using 1C AFW Pump and alternate steaming flow paths on the unisolated S/G.
**REFER TO** Table 12, Alternate S/G Heat Removal Paths.

[*] **28. Sample RCS for Dilution**

If RCS pressure is less than the **ISOLATED** S/G pressure, Then SAMPLE the RCS for boron concentration in 30 minute intervals.

| Examination Outline Cross-reference: | Level | RO | SRO |
|---|---|---|---|
| | Tier # | 2 | |
| | Group # | 2 | |
| | K/A # | 2.4.49 | |
| | Importance Rating | 4.6 | |

045 / Main Turbine Generator: Emergency Procedures / Ability to perform without reference to procedures those actions that require immediate operation of system components and controls.

Proposed Question: RO 62

The Unit Supervisor has ordered a manual Reactor trip due to lowering SG levels. The Reactor has tripped and a manual Turbine trip was initiated but the Turbine still did NOT trip.

Which of the following EOP-01 actions should be performed?

A. Place both DEH pumps in 'Pull to Lock' position.

B. Open the East and Mid Generator breakers

C. Open the Generator Exciter Supply Breaker

D. Close both Main Steam Isolation valves

Proposed Answer: D

Explanation (Optional):

A. This would slowly allow GV and TV's to close but not procedurally driven
B. This would cause a LOOP
C. Exciter breaker interlocked with Generator breakers. Will not open
D. Correct

Technical Reference(s): EOP-01 Standard Post Trip Actions (Attach if not previously provided)

Proposed references to be provided to applicants during examination: _____

Learning Objective: 0702822-05 (As available)

Question Source: Bank # _____

Modified Bank # _____ (Note changes or attach parent)

New X

Question History: Last NRC Exam _____

Question Cognitive Level: Memory or Fundamental Knowledge X
Comprehension or Analysis _____

10 CFR Part 55 Content: 55.41 10
55.43 _____

Comments:

RO 62



**4.0 OPERATOR ACTIONS** (continued)

# MAINTENANCE OF VITAL AUXILIARIES
## (AC & DC POWER)

| INSTRUCTIONS | CONTINGENCY ACTIONS |
|---|---|
| ☐ **2.** DETERMINE Maintenance of Vital Auxiliaries acceptance criteria are met: | |
| **A.** VERIFY the Turbine is tripped by **ALL** GVs and TVs indicate CLOSED. | **A.1** PERFORM **ALL** of the following:<br>**1.** Manually TRIP the Turbine.<br>**2.** VERIFY Turbine First Stage pressure indicates 0 psig.<br>**3.** VERIFY Turbine speed is LOWERING.<br>**A.2** <u>If</u> the Turbine is NOT tripped, <u>Then</u> PERFORM the following **AS NECESSARY** to isolate steam to the turbine:<br>**1.** Locally TRIP the Turbine.<br>**2.** CLOSE **BOTH** MSIVs. |
| **B.** **<u>When</u> the Turbine is TRIPPED,** <u>Then</u> VERIFY the Main Generator breakers are OPEN:<br>• 8W26, Generator No. 1 East Breaker<br>• 8W30, Generator No. 1 Mid Breaker<br>• CB FB 1, Exciter Supply Breaker | **B.1** OPEN Main Generator breakers:<br>• 8W26, Generator No. 1 East Breaker<br>• 8W30, Generator No. 1 Mid Breaker<br>• CB FB 1, Exciter Supply Breaker |

**(Continued on next page)** **(Continued on next page)**

| Examination Outline Cross-reference: | Level | RO | SRO |
|---|---|---|---|
| | Tier # | 2 | |
| | Group # | 2 | |
| | K/A # | K3.01 | |
| | Importance Rating | 2.5 | |

055 Condenser Air Removal: Knowledge of the effect that a loss or malfunction of the CARS will have on the following: Main condenser.

Proposed Question: RO 63

Unit 1 has established a vacuum in preparation for startup with the following:

- A and B AFW pumps running
- 1A Condensate pump running

Which of the following will have the LARGEST impact on condenser vacuum?

A. TCV-22-61 Turbine Exhaust Hood sprays fail closed

B. FCV-12-1 Condensate Header Recirc To Condenser failing closed

C. PCV-12-29 Steam Jet Air Ejector Main Steam pressure regulator failing open

D. PCV-12-34 Auxiliary Priming Ejectors Main Steam pressure regulator failing closed

Proposed Answer: B

Explanation (Optional):

A. Minor affect
B. Correct, no flow through inner and after condenser for SJAE
C. Higher steam pressure would degrade SJAE performance but not LARGEST
D. Minor affect, common to remove Aux priming from service at power.

Technical Reference(s): 0711301 Condensate and Feedwater system (Attach if not previously provided)

Proposed references to be provided to applicants during examination: _____

Learning Objective: 0702301-8G (As available)

Question Source: Bank # 2048

Modified Bank # _____ (Note changes or attach parent)

New _____

Question History: Last NRC Exam _____

Question Cognitive Level: Memory or Fundamental Knowledge _____

Comprehension or Analysis X

10 CFR Part 55 Content: 55.41 7

55.43 _____

Comments: Changed 'D' from failing open to failing closed. This makes the distractor more plausible.

RO 63

# Single Question Report

| | | | | |
|---|---|---|---|---|
| **QID#:** 2048 | **Objective:** 0000000-00 | | **System:** CD/FW | |
| **Rev:** 0 | **Cog Level:** 2 | **KA #** 055.K3.01 | **RO** 2.5 | **SRO** 2.7 |

Unit 1 has established a vacuum in preparation for startup with the following equipment is service:
- A and B AFW pumps
- 1A Condensate pump

Which of the following will have the largest impact on Condenser vacuum?

A. TCV-22-61 Turbine Exhaust Hood sprays fails closed.

B. FCV-12-1 Condensate Header Recirc to Condenser failing closed.

C. PCV-12-29, Steam jet air ejector main steam pressure regulator failing open.

D. PCV-12-34 Auxiliary Priming Ejectors main steam pressure regulator failing open.

**Reasons the choices are right or wrong.**

**Correct answer is B.**

A. designed to fail open to maintain vacuum

B. , loss of flow to SJAE and Gland Exhaust condenser

C. exhaust hood sprays open at 160 degrees, normally closed

D. will keep water boxes full and improve vacuum if anything,

**Source Ref:** 0711301 Lesson Text: Condenser, Feedwater and Heat

**Open Ref:**

**Revision Notes:**

## Question Use History

HLC-16 PreAudit Quiz 7 (HLC-15 NRC), 0717018, 6/1/2004

HLC-15 RO NRC 2001, 0717003, 1/1/2001
HLC-15 SRO NRC 2001, 0717004, 1/1/2001

- A bypass line with an installed flow orifice in parallel with the condensers is provided to create the necessary backpressure for adequate flow through the condensers and to also allow condensate flow through the header with the heat exchangers isolated (if required).

**Gland Steam (GS) Condenser**

The GS condenser captures and reuses turbine gland sealing steam and prevents it from leaking into the atmosphere. Gland steam exhaust is drawn into the gland steam condenser by the vacuum created by the GS condenser. As the steam condenses, entrained non-condensable gases escape into the shell side of the condenser. Gases are then exhausted to atmosphere by one of two fans to prevent the decrease in condenser efficiency associated with air blanketing. The condenser is a single-pass, cross-flow, shell-and-tube type heat exchanger.

**SJAE/GS Condenser Cooling**

FCV-12-1, Condensate Header Recirc to Condenser, maintains condensate flow through the SJAE and gland steam condensers for proper operation during low flow conditions in the condensate system.

A local control station controls air operated, FAIL CLOSED, valve FCV-12-1:

- Locally opened prior to starting a Condensate pump.
- The recirculation valve automatically maintains setpoint to maintain condensate header flow ≥ 8000 [10000] gpm.
- A control room alarm is received if condensate header flow is ≤ 8000 gpm.

**Condensate Polisher Filter Demineralizer (CPFD)**

Condensate polishing denotes a process where highly purified condensate undergoes additional water treatment. This process is normally used following a unit shutdown, or if condenser tube leakage occurs. The treatment removes impurities (crud such as iron and copper oxides, and electrolytes like sodium chloride) that enter the condensate system. The polishing process is accomplished by ion-exchanging resins. A thin layer of powdered resin is applied to the external surface of a specially designed filter element. When the ion exchanging

| Examination Outline Cross-reference: | Level | RO | SRO |
|---|---|---|---|
| | Tier # | 2 | |
| | Group # | 2 | |
| | K/A # | K1.03 | |
| | Importance Rating | 2.6 | |

056 / Condensate: Knowledge of the physical connections and/or cause-effect relationships between the Condensate System and the following systems: MFW.

Proposed Question: RO 64

Unit 2 is performing a unit startup and is currently at 52% power. Both Main Feedwater Pumps are in service with 2A and 2C Condensate pumps in service.

A differential (Δ) Current lockout occurs on the 2B2 4.16 KV bus.

Which of the following will be the response of the Main Feedwater Pumps and WHY?

A. BOTH Main Feedwater pumps trip on low suction pressure due to loss of 2C Condensate pump and 2B Heater Drain pump.

B. BOTH Main Feedwater pumps remain in service, due to the initial low power feedwater flow.

C. The 2B Main Feedwater Pump trips as a direct result of 2C Condensate pump trip.

D. The 2B Main Feedwater Pump trips as a direct result of the differential current lockout.

Proposed Answer: C

Explanation (Optional):

A. Suction pressure adequate with one Condensate pump at 52% power
B. Interlock to trip 2B Main Feedwater pump
C. Correct
D. Main Feedwater pump is 6.9KV not 4.16KV

Technical Reference(s): 0711301 Condensate and Feedwater (Attach if not previously provided)

Proposed references to be provided to applicants during examination: _____

Learning Objective: 301-18 LPC (As available)

Question Source: Bank # _____

Modified Bank # 1557 (Note changes or attach parent)

New _____

Question History: Last NRC Exam _____

Question Cognitive Level: Memory or Fundamental Knowledge _____

Comprehension or Analysis X

10 CFR Part 55 Content: 55.41 2

55.43 _____

Comments:

# Single Question Report

RO 64

**QID#:** 1557 **Objective:** 0702301-0 **System:** CD/FW

**Rev:** 0 **Cog Level:** 1 **KA #** 056.K1.03 **RO** 2.6 **SRO** ?

Unit 2 is performing a unit up power and is currently at 54% power increasing at 2 MWE/Min. Both Main Feedwater pumps and Condensate pumps are in service, when the 2B condensate pump trips. Which of the following will be the initial plant response as the result of 2B Condensate pump tripping?

A. Both Main Feedwater pumps trip on low suction pressure.

B. Both Main Feedwater pumps trip on low suction flow.

C. Alarms only, capacity of one condensate pump is 55% power

D. The 2B Main Feedwater pump trips as a direct result of 2B Condensate pump trip.

**Reasons the choices are right or wrong.** **Correct answer is D.**

A.

B.

C.

D.

**Source Ref:** 0711301 'Condensate, Feedwater, and Heater Vents a

**Open Ref:**

**Revision Notes:**

## Question Use History

HLC-16 PreAudit Quiz 9, 0717022, 6/14/2004

Turbine Trip signal has cleared (i.e., turbine relatched – EH header repressurized).. At that time, the recirculation valves will **close**. The valves fail open on a loss of instrument air and fail closed on loss of electrical power.

Only one MFW pump is normally running when plant power is less than 45%. The standby MFW pump will automatically start if the running feedwater pump TRIPS and the control switch for the idle pump is in the AUTO or RECIRC position, provided the pump start interlocks are met. The standby MFW pump will only auto start if the running MFW pump automatically trips (it will not start if pump is intentionally stopped. To start a MFW pump, the following interlocks must be met: (Refer to Figure 20.)

- Lube oil pressure >8 psig.
- MFW pump suction valve is open.
- MFW pump suction pressure >275 psig.
- Two condensate pumps are running, or
  total feedwater flow is less than 50% and one condensate pump is running.

The MFW pump discharge valve will open after the pump starts. The auxiliary oil pump must be manually stopped locally.

The MFW pumps will trip under the following conditions: (Refer to Figure 21.)

- Lube oil pressure <4 psig.
- Operating pump suction pressure <275 psig.
- Electrical fault (instantaneous overcurrent or differential current)
- Both running condensate pumps are stopped.
- MFW pump suction flow ≤2500 gpm after pump running greater than 30 sec and low flow for greater than 10 sec.
- Hi-Hi SG level ≥90% [≥88%].
- 6.9 KV undervoltage
- Loss of one condensate pump with total feed flow >50% and both MFW pumps running. (Loss of condensate pump trips its respective side feedwater pump)
- MSIS (Unit 1 only)

Each MFW pump motor has a thrust bearing and two radial journal bearings, which are lubricated and cooled by oil from the feedwater pump oil system. Each MFW pump's oil system

| Examination Outline Cross-reference: | Level | RO | SRO |
|---|---|---|---|
| | Tier # | 2 | |
| | Group # | 2 | |
| | K/A # | A2.02 | |
| | Importance Rating | 2.5 | |

075 Circulating Water: Ability to predict the impacts of the following malfunctions or operations on the circulating water system; and (b) based on those predictions use procedures to correct, control, or mitigate the consequences of those malfunctions or operations: Loss of circulating water pumps.

Proposed Question: RO 65

Unit 1 is at 34% power with the 1B1 Circulating Water pump out of service. The 1B2 Circulating water pump trips.

The following conditions exist after the 1B2 CWP trips:

- Backpressure is 4.2" Hg.
- Condenser differential pressure is 2.3" Hg.
- $\Delta T$ across the condenser is $28^0F$

Which of the following should be performed?

A. Trip the reactor and the turbine due to high condenser backpressure.

B. Begin a turbine / reactor shutdown and attempt to restore at least one circulating water pump.

C. Trip the reactor and the turbine due to high condenser differential pressure.

D. Begin a turbine / reactor shutdown until $\Delta T$ across the condenser is less than $25^0F$.

Proposed Answer: B

Explanation (Optional):

A. Limit is 5.5" Hg >30% power
B. Correct
C. Limit is 2.5" Hg
D. Limit is $30^0F$, no shutdown required.

Technical Reference(s): 0702502 (Attach if not previously provided)

Proposed references to be provided to applicants during examination: _____

Learning Objective: 0702502-00 (As available)

Question Source: Bank # _____
Modified Bank # _____ (Note changes or attach parent)
New X

Question History: Last NRC Exam _____

Question Cognitive Level: Memory or Fundamental Knowledge X
Comprehension or Analysis _____

10 CFR Part 55 Content: 55.41 5
55.43 _____

Comments:

**7.2** Subsequent Operator Actions (continued)

| INSTRUCTIONS | CONTINGENCY ACTIONS |
|---|---|
| **2.** If both circulating water pumps in one main condenser trip and any of the following conditions are met:<br><br>**A.** Differential pressure between the condensers is greater than or equal to 2.5" Hg. Abs. (PI 10-6 manometer and PI 10-7).<br><br>**B.** Back pressure greater than 3.5" Hg. Abs. when less than 30% reactor power.<br><br>**C.** Back pressure greater than 5.5" Hg. Abs. when greater than 30% reactor power.<br><br>Then trip the reactor and the turbine and carry out 1-EOP-01, Standard Post Trip Actions. | **2.** If both circulating water pumps in one condenser are stopped, Then begin a turbine / reactor shutdown in a controlled manner and attempt to restore at least one circulating water pump in that condenser. |
| **3.** Verify differential level across the traveling screens is less than 6 inches. | **3.** If a high differential level across the traveling screens exists, Then:<br><br>**A.** Ensure automatic start of the screen wash pumps at 6" differential level.<br><br>**1.** If screen wash pump strainers are in alarm, Scrn Wash Pump Strainers ΔP High, (E-29), Then backwash strainers per Appendix B, Backwash Screen Wash Strainers.<br><br>**B.** If traveling screen differential level reaches 10", Then: |

**7.2** Subsequent Operator Actions (continued)

| INSTRUCTIONS | CONTINGENCY ACTIONS |
|---|---|
| | **8.** (continued) |
| | **C.** If bearing temperature is greater than or equal to ≥210°F, Then trip the affected pump(s). |
| | **D.** If the pump has been stopped due to bearing temperature exceeding 210°F, Then oil analysis should be performed to determine any bearing or lubricant degradation. |
| | **E.** If lube water or seal water low flow is indicated, Then locally adjust flows as required, (normal lube water flow 6-10 gpm). |
| | **F.** Refer to Appendix A if backwashing lube water strainer is required. |

**NOTE**

- §1 The discharge canal temperature may exceed 113°F or the ΔT across the condenser may exceed 30°F if the below conditions exist and discharge is maintained below 117°F and ΔT less than 32°F. Chemistry must be notified in either case.

  A. Condenser and / or Circulating Water Pump maintenance.

  B. Fouling of Circulating Water System.

- With the Met Tower discharge canal temperature out of service, refer to the Environmental Protection Plant to ensure the average of all Circ Water pumps discharge temperatures are recorded properly.

| | |
|---|---|
| **9.** Determine the cause for the high discharge temperature or high ΔT. | **9.** Collect Condenser Tube Cleaning System sponge balls in accordance with 1-NOP-21.01, Condenser Tube Cleaning System Operation. |

Examination Outline Cross-reference:

| Level | RO | SRO |
|---|---|---|
| Tier # | 3 | |
| Group # | Cat.1 | |
| K/A # | 2.1.2 | |
| Importance Rating | 4.1 | |

Conduct of Operations: Knowledge of operator responsibilities during all modes of plant operation.

Proposed Question: RO 66

The 1B CVCS ion Exchanger has been placed in service following resin replacement. Although the RO rinsed the ion exchanger for 1 hour, after 10 minutes of in service time, the following conditions exist:

- Reactor Power 10 MIN_AVG DCS calorimetric indicates 100.6%
- Highest Nuclear Power indicates 100.0%

According to Operations Department Policy OPS-503, which of the following is correct concerning power reduction guidance?

A. Immediately commence emergency boration to reduce reactor power to ≤100% within 30 minutes.

B. Reduce reactor power to ≤100% within 15 minutes.

C. Reduce reactor power to ≤100% within 30 minutes.

D. Monitor highest Nuclear power to ensure reactor power remains ≤100%.

Proposed Answer: B

Explanation (Optional):

A. Does not meet procedure criteria for emergency boration
B. Correct
C. This is 100.2% power criteria
D. Procedure criteria is DCS calorimetric power

Technical Reference(s): Operations Department Policy OPS-503 (Attach if not previously provided)

Proposed references to be provided to applicants during examination: _____

Learning Objective: ADM 760 LPC-4 (As available)

Question Source: Bank # X

Modified Bank # _____ (Note changes or attach parent)

New *X Bank

Question History: Last NRC Exam _____

Question Cognitive Level: Memory or Fundamental Knowledge X

Comprehension or Analysis _____

10 CFR Part 55 Content: 55.41 10

55.43 _____

Comments: *1998 NRC exam but not found in PSL Bank

R0660



**The following guidance is provided to ensure consistent understanding and compliance with the Technical Specifications. This guidance reflects the Operations Management view of and expectations concerning the Technical Specifications.**

1. Licensed Power Level

**CAUTION**

REACTOR POWER 10 MIN_AVG is the value normally used while monitoring Reactor Power. If DCS calorimetric becomes unreliable, the nuclear power indication is to be used. Confirm indicated nuclear power with a manual calorimetric. Reactor Power should not exceed 99.97% and shall not exceed 100% on the highest indicating channel.

**NOTE**

- The Safety Analysis is based on an initial power level of 102%. DCS calorimetric power has an uncertainty of 1.3%.
- For DCS calorimetric power, only use to the tenth of a percent power digit. Using the hundredth digit for purposes of rounding is not statistically meaningful. The hundredth digit is used for trending.
- Minor fluctuations may occur without operator action.

A. Operators are expected to control steady state power between 99.92% and 99.97%.

1. At no time will the steady state 99.97% power limit be exceeded intentionally.

2. If a minor excursion beyond 99.97% power occurs, Then immediate action shall be taken using the following guidance.

**NOTE**

There are no limits on the number of times these excursions may occur or the time interval that must separate these excursions provided immediate action to reduce power to less than or equal to 100.00% is taken.

a. An excursion up to 100.5% shall be reduced within 15 minutes.

b. Lesser excursions of up to 100.10% shall be reduced within 30 minutes.

Examination Outline Cross-reference:

| Level | RO | SRO |
|---|---|---|
| Tier # | 3 | |
| Group # | Cat. 1 | |
| K/A # | 2.1.26 | |
| Importance Rating | 3.4 | |

Conduct of Operations: Knowledge of industrial safety procedures (such as rotating equipment, electrical, high temperature, high pressure, caustic, chlorine, oxygen and hydrogen).

Proposed Question: RO 67

Local Annunciator on Unit 2, YA-5 AUTO ANALYZER %$O_2$ HI-HI is in alarm. The Orbisphere oxygen monitor indicates 2.2%. Chemistry samples on the in-service gas decay tank indicates the same reading.

Which of the following actions should be taken?

A. Suspend all additions of waste gasses and add nitrogen to the in-service gas decay until oxygen is less than 2%.

B. Suspend all additions of waste gasses and add nitrogen to the gas surge tank until oxygen is less than 2%.

C. Isolate the gas decay tank and line-up waste gas directly to the Plant Vent.

D. Release the in-service gas decay tank directly to the Plant Vent.

Proposed Answer: A

Explanation (Optional):

A. Correct, Immediate Operator actions from off-normal procedure.
B. Nitrogen is not added to the Surge Tank.
C. Not procedurally driven
D. Not procedurally driven

Technical Reference(s): 2-0530030 Waste Gas System (Attach if not previously provided)

Proposed references to be provided to applicants during examination: _____

Learning Objective: 0702861-06 (As available)

Question Source: Bank # _____

Modified Bank # _____ (Note changes or attach parent)

| | | |
|---|---|---|
| | New | X |
| Question History: | Last NRC Exam | |
| Question Cognitive Level: | Memory or Fundamental Knowledge | X |
| | Comprehension or Analysis | |
| 10 CFR Part 55 Content: | 55.41 | 10 |
| | 55.43 | |

Comments: Immediate Operator actions from off-normal procedure.

RO 67



**7.0** OPERATOR ACTIONS

**7.1** Immediate Operator Actions

| INSTRUCTIONS | CONTINGENCY ACTIONS |
|---|---|
| **1.** §1 If the concentration of oxygen in the in-service gas decay tank is greater than 4% by volume and the hydrogen concentration greater than 2% by volume, Then: | |
| **A.** Immediately suspend all additions of waste gases to the system. | |
| AND | |
| **B.** Begin reducing the concentration of oxygen to less than 2% by volume by admitting nitrogen to the Inservice Gas Decay Tank by opening the appropriate valve.<br><br>2A GDT-V6588<br>2B GDT-V6596<br>2C GDT-V6599 | |
| **2.** If an unexpected drop or rise in pressure of a gas decay tank occurs, Then immediately terminate any gas release in progress. | |

**END OF SECTION 7.1**

| REVISION: | PROCEDURE TITLE: | PANEL: |
|---|---|---|
| 0 | ANNUNCIATOR RESPONSE PROCEDURE | YA |
| PROCEDURE NO: | GAS ANALYZERS | WINDOW: |
| 2-ARP-10-YA5 | ST. LUCIE UNIT 2 | 5 |

## ANNUNCIATOR PANEL YA

| | | | | |
|---|---|---|---|---|
| 1 | 2 | 3 | 4 | **5** |
| 6 | 7 | 8 | 9 | 10 |

**AUTO GAS ANALYZER**
**% $O_2$ HI-HI**

**YA-5**

**DEVICE:**
74-1/1620
Oxygen sensor

**LOCATION:**
Auto Gas Analyzer
Auto Gas Analyzer

**SETPOINT:**
De-energized
2% Oxygen rising

**ALARM CONFIRMATION:**
1. Local indication on Auto Gas Analyzer.
2. Auto Gas Analyzer % O2 HI alarm.

**OPERATOR ACTIONS:**
1. ATTEMPT to reset the annunciator.
2. If local Orbisphere oxygen monitor is greater than or equal to 2% or the annunciator remains in ALARM, Then NOTIFY the Control Room of the indication and of the requirement to enter ONOP 2-0530030, Waste Gas System Off-Normal Operating Procedure.

**CAUSES:** High oxygen concentration, oxygen sensor malfunction or a loss of power.

**REFERENCES:**
1. CWD-2998-B-327 sheet 1549, 1620.
2. VTM-2998-8298
3. ONOP 2-0530030

Examination Outline Cross-reference:

| Level | RO | SRO |
|---|---|---|
| Tier # | 3 | |
| Group # | Cat.1 | |
| K/A # | 2.1.37 | |
| Importance Rating | 4.3 | |

Conduct of Operations: Knowledge of procedures, guidelines, or limitations associated with reactivity management..

Proposed Question: RO 68

The following conditions exist:

- Unit 1 is at 100% power
- Tavg is 572$^0$F
- The RCO adjusts SG Blowdown from 40 gpm per SG to 120 gpm per SG

Which of the following describes the Plant Adjustment that the RO will have to make to compensate for the change in steam generator blowdown?

A. Borate the RCS

B. Lower Feedwater flow

C. Lower Turbine load

D. Dilute the RCS

Proposed Answer: C

Explanation (Optional):
A. Borating will lower RCS temperature sill lower
B. Feedwater in Auto, not RCO adjustment
C. Correct, lowering turbine load will rise RCS temperature
D. Backwards logic

Technical Reference(s): NAP-402 Conduct Of Operations (Attach if not previously provided)

Proposed references to be provided to applicants during examination: _____

Learning Objective: _____ (As available)

Question Source: Bank # _____

Modified Bank # _____ (Note changes or attach parent)

New X

Question History: Last NRC Exam _____

Question Cognitive Level: Memory or Fundamental Knowledge _____

Comprehension or Analysis X

10 CFR Part 55 Content: 55.41 1

55.43 _____

Comments:

R068



**ATTACHMENT E**
**REACTIVITY MANAGEMENT CONTROLS**
(Page 2 of 27)

The systematic and philosophical direction given to anticipating and controlling conditions or activities which affect reactivity. Reactivity components of the fuel include:

- Reactor coolant system pressure
- Reactor power level
- Control rods
- Moderator temperature
- Fission product poisons
- Boron concentration/neutron absorbers
- Fuel assembly location
- Core coolant flow
- Steam voids
- Fuel assembly burn-up

**2.3** Reactivity Manipulation

- Moving control rods
- Operating the chemical and volume control system to perform a reactor coolant system (RCS) dilution, boration, or makeup.
- Activities that affect reactor power level or temperature, such as turbine load changes or other changes in steam demand, RCS chemical additions, feedwater temperature and changes in steam generator blowdown flow rates.

# FIGURE 1
## REACTIVITY MANAGEMENT SUPPORT SYSTEMS
(Page 1 of 1)

Examination Outline Cross-reference:

| Level | RO | SRO |
|---|---|---|
| Tier # | 3 | |
| Group # | Cat. 2 | |
| K/A # | 2.2.3 | |
| Importance Rating | 3.8 | |

Equipment Control: Knowledge of the design, procedural, and operational differences between units.

Proposed Question: RO 69

Which one of the following EOP-01 manual Operator actions must be performed on Unit 2, but NOT on Unit 1? (Assume uncomplicated Reactor trip)

A. Close the MSR block valves

B. Close MV-08-814 Spillover bypass valve

C. Place the ADV's in Auto/Auto control

D. Open SG fill isolation V09218 15-20 turns

Proposed Answer: A

Explanation (Optional):

A. Correct, Unit 1 MSR block valves auto close on trip
B. Performed on both units
C. Performed on Unit 2 only when ADV's are put in service
D. Performed on both units

Technical Reference(s): Lesson Plan 0702304 (Attach if not previously provided)

Proposed references to be provided to applicants during examination: _____

Learning Objective: 0702304-06 (As available)

Question Source: Bank # _____
Modified Bank # _____ (Note changes or attach parent)
New X

Question History: Last NRC Exam _____

Question Cognitive Level: Memory or Fundamental Knowledge X

Comprehension or Analysis

10 CFR Part 55 Content: 55.41 5

55.43

Comments:

Ro 69

e. Initially, moisture falls to bottom of shell and drains to condenser through alternate dump valve controlled by MSR shell side level.

f. When 50 psid develops between MSR and #4 heater, weighted check valve allows flow to #4 heater (alt. Dump closes on level).

1) MSR has no normal LCV.

g. MSR high level is annunciated.

h. High-high level opens alternate dump.

1) High levels in MSR could result in carry-over to LP turbine if not corrected.

3. Tube Side

Fig. 15, Fig. 16, Fig. 17 and Fig. 18.

a. Main steam supplied to MSRs from MS headers upstream of HP turbine.

**EO-2E**

b. Block valves and TCVs control steam flow through tube bundles.

c. Steam enters at top and makes first pass through outer radius tubes back to.

d. Baffle plates redirect steam back through inner radius tubes, exiting into the SSVC.

SSVC eliminated problem of non-condensible gases blanketing U-tubes and reducing flow and efficiency.

e. SSVC

1) < 300 MW aligned to condenser;

2) > 300 MW aligned to #5 heater

a) By procedure when MSRs placed in service.

f. MSR Steam Supply

**EO-6C**

1) Motor operated block valves isolate steam to MSR.

a) OPEN/CLOSE from RTGB switches

b) Unit 1 only, block valves auto close on turbine trip.

| Examination Outline Cross-reference: | Level | RO | SRO |
|---|---|---|---|
| | Tier # | 3 | |
| | Group # | Cat. 2 | |
| | K/A # | 2.2.12 | |
| | Importance Rating | 3.7 | |

Equipment Control: Knowledge of surveillance procedures.

Proposed Question: RO 70

Unit 2 is performing a RCS inventory balance IAW 2-OSP-01.03 'RCS Inventory Balance'. Which of the following could result in inaccurate or invalid calculations? (Assume inventory balance 100% power steady state)

A. 50 gallons of primary water added to Charging pump suction.

B. A Charging pump seal leak resulted in seal tank level increase of 1 (one) inch

C. The Quench Tank was drained to 60% and refilled to 67% for cooling purposes.

D. Running Charging pump recirc valve was found to be leaking by seat about 0.5 gpm.

Proposed Answer: C

Explanation (Optional):

A. Boration and Dilution are calculated in leak rate
B. Seal tank level is calculated in leak rate
C. Correct, procedure directs NOT draining or filling QT.
D. Recirc flow goes back to VCT. No effect on calculation

Technical Reference(s): 2-OSP-01.03 Reactor Coolant System Inventory Balance (Attach if not previously provided)

Proposed references to be provided to applicants during examination: _____

Learning Objective: PSL NLI ADM 757 LPC-3 (As available)

Question Source: Bank # _____
Modified Bank # _____ (Note changes or attach parent)
New X

Question History: Last NRC Exam _____

Question Cognitive Level: Memory or Fundamental Knowledge X
Comprehension or Analysis _____

10 CFR Part 55 Content: 55.41 10
55.43 _____

Comments:

FOR INFORMATION ONLY
Before use, verify revision and change documentation (if applicable) with a controlled index or document.
DATE VERIFIED_____ INITIAL_____

## DATA SHEET 1
## §1 REACTOR COOLANT SYSTEM INVENTORY BALANCE
(Page 1 of 6) /R2A

**NOTE**

Deviations from steady state conditions should be avoided to ensure accuracy of the leak rate calculation. If conditions are changing, consideration should be given to extending the time of the calculation and / or repeating the calculation as necessary to improve the accuracy / reliability of the leak rate calculation until such time that steady state conditions are attained. ANY of the following could result in inaccurate or invalid calculations:

- Changes in RCS temperature
- Adjustments to Quench Tank parameters
- Charging pump configuration changes
- Adjustments to charging pump seal tank levels
- Adjustments to letdown or pressurizer controllers
- Diverting of letdown to Waste Management
- VCT makeup with letdown isolated

Where available, ERDADS should be used in lieu of RTGB indicators to improve the accuracy of the calculation.

1. RECORD initial data. After desired time has elapsed, RECORD final data and CALCULATE differences.

| Initial Conditions | Final Conditions | Notes | Difference |
|---|---|---|---|
| Date:____/____/____ Time:_____ | Date:____/____/____ Time:_____ | 2 hour minimum required unless not at steady state. (Chg. Pump data excluded) | _____Minutes |
| $T_{COLD}$:_____°F | $T_{COLD}$:_____°F | Held constant (+/-0) ** | _____°F /R2 |
| B.A. Integrator:_____ | B.A. Integrator:_____ | Always Negative | -_____gal. |
| PMW Integrator:_____ | PMW Integrator:_____ | Always Negative | -_____gal. |
| VCT Level:_____% | VCT Level:_____% | + if final > initial<br>- if final < initial<br>(% change x 33.8 gal. per %) | ( )_____gal. |
| Pzr Level:_____% | Pzr Level:_____% | + if final > initial<br>- if final < initial<br>(% change x 67.04 gal. per %) | ( )_____gal. |
| Q.T. Level:_____% | Q.T. Level:_____% | Always Negative<br>N/A if final < initial<br>(% change x 16.5 gal. per %) | -_____gal. |
| Notify SNPO to mark Seal Tank level for ALL available Chg. Pps. * | Notify SNPO to mark Seal Tank level for ALL available Chg. Pps. * | 30 minute minimum required.<br>Always Negative.<br>N/A if final < initial<br>(1 inch = 0.59 gal.) | -_____gal. |

* Data should be recorded for ANY pump hydraulically connected to the system.

** If $T_{cold}$ not held constant, consideration should be given to repeating calculation when conditions permit.

S__2__OPS /R2
DATE_____
DOCT____Data Sheet____
DOCN__2-OSP-01.03____
SYS_____OPS_____
COMP_____--------_____
ITM_____DS 1_____

Examination Outline Cross-reference:

| Level | RO | SRO |
|---|---|---|
| Tier # | 3 | |
| Group # | Cat. 3 | |
| K/A # | 2.3.4 | |
| Importance Rating | 3.2 | |

Radiation Control: Knowledge of radiation exposure limits under normal or emergency conditions.

Proposed Question: RO 71

A PSL employee is performing work in the Pipe Tunnel. The dose rate in the area is 210 Mr/hr. The employee's exposure record to date for the year is 280 mrem. What is the maximum time the employee can stay in this area without exceeding his TEDE annual administrative FPL limit? (Assume NRC form 4 on file)

A. 48 minutes

B. 205 minutes

C. 634 minutes

D. 1348 minutes

Proposed Answer: B

Explanation (Optional):

A. Non Form 4 exposure limit (.45 rem/yr)
B. Correct (1000 mrem/yr)
C. Form 4 with extension (2500 mrem/yr)
D. Federal exposure limit (5 Rem/yr)

Technical Reference(s): HP-30 Personnel Monitoring (Attach if not previously provided)

Proposed references to be provided to applicants during examination: _____

Learning Objective: _____ (As available)

Question Source:

| | | |
|---|---|---|
| Bank # | | |
| Modified Bank # | | (Note changes or attach parent) |
| New | X | |

Question History: Last NRC Exam _____

Question Cognitive Level: Memory or Fundamental Knowledge _____
Comprehension or Analysis X

10 CFR Part 55 Content: 55.41 12
55.43 _____

Comments:

## APPENDIX 6
## AUTHORIZATION TO EXCEED ADMINISTRATIVE GUIDELINES
(Page 1 of 4)

**7.0** Instructions: General

This appendix contains the instructions necessary to authorize persons to exceed administrative exposure guidelines.

**7.1** When an individual is expected to exceed his exposure guidelines, a Radiation Exposure Extension Request (HPP-30.12) shall be completed.

> **NOTE**
> A request for this extension should be made at least 8 hours prior to expecting the individual to exceed the administrative exposure guidelines.

**7.2** Before an extension is authorized, an investigation into the individual's radiation exposure history shall be conducted.

**7.3** §2 Authorization may be granted as long as the exposure limits in 10 CFR 20 are not exceeded.

**7.4** §2 Administrative Exposure Guidelines

**1.** Any individual with non-documented current year exposure shall have their annual exposure guidelines set to the following doses:

| | | |
|---|---|---|
| **A.** | TEDE | 0.45 rem |
| **B.** | Lens of eye | 1.35 rem |
| **C.** | Skin | 4.5 rem |
| **D.** | Extremity | 4.5 rem |
| **E.** | CDE | 4.5 rem |

**2.** §2 At the beginning of each calendar year, each person with a completed current year Form 4 may be allowed to receive up to 1000 mrem TEDE.

**3.** §2 An individual with a complete Form 4 for the current year may have their site annual dose guideline extended to 2500 mrem / yr by the Health Physics Department Head and the Plant General Manager.

**APPENDIX 6**
**AUTHORIZATION TO EXCEED ADMINISTRATIVE GUIDELINES**
(Page 2 of 4)

**7.4** (continued)

**4.** §2 An individual with a complete Form 4 for the current year may have their site annual dose guideline extended to greater than 2500 mrem by the Health Physics Department Head, the Plant General Manager and Site Vice President.

**5.** An individual with a complete Form 4 for the current year may have their annual dose guideline extended to greater than 3000 mrem / year, by the Health Physics Department Head and Plant General Manager.

**6.** §2 The Plant General Manager and Health Physics Department Head shall approve and the Site Vice President shall authorize all dose extensions above the annual guideline of 4500 mrem TEDE.

**7.** §2 After the TLD has been read and if the site annual TEDE is less than 2500 mrem, the individual may be allowed back into the Radiation Controlled Area until his / her annual TEDE (TLD results and EPD doses) reaches 2500 mrem.

**8.** Upon reaching an annual TEDE of 2500 mrem, the individual shall not be allowed to enter the Radiation Controlled Area, unless extended > 2500 mrem / yr as required by step 7.4.4 above.

**9.** §2 FPL permanent employees should have their lifetime dose (TEDE) restricted to 1XN where N is the employee's age. If an FPL employee has a lifetime dose in excess of 1XN, the employee should have their annual dose guideline set to 1.0 Rem (TEDE).

## TABLE 1
## OCCUPATIONAL REGULATORY DOSE LIMITS AND FPL GUIDELINES
(Page 1 of 1)

| | Quantity | Regulatory Limit | FPL Guideline | |
|---|---|---|---|---|
| | | | FPL Plants (total per plant)[a] | All Sites (total for all sites) |
| 1. | Total Effective Dose Equivalent (TEDE) [b,d] | 5 rems/yr | 2.5 rems/yr | 4.5 rems/yr |
| 2. | Shallow dose equivalent to the skin or to any extremity | 50 rems/yr | 25 rems/yr | 45 rems/yr |
| 3. | Lens dose equivalent | 15 rems/yr | 7.5 rems/yr | 13.5 rems/yr |
| 4. | Committed Dose Equivalent | 50 rems/yr | 25 rems/yr | 45 rems/yr |
| 5. | Total organ dose equivalent [c] | 50 rems/yr | 25 rems/yr | 45 rems/yr |
| 6. | Dose to embryo / fetus of a declared pregnant woman | 0.5 rems during entire pregnancy | N/A | 0.45 rems during entire pregnancy (50 mrems / month) |
| 7. | Dose limits for minors | 10% of annual dose limits specified for adult persons | Minors are restricted from entering the RCA. | N/A |

[a] For FPL employees, 2.5 rems/yr represent the total of the dose received at each FPL plant not to exceed 4.5 rems/yr. The guideline is applicable for FPL employees whose lifetime dose is less than 1XN; where N is the person's age in years. For FPL employees, the annual dose should be limited so that his / her lifetime dose does not exceed 1XN. If an individual's lifetime dose is greater than 1XN, then his dose should be limited to 1 rem/yr TEDE. For contractor employees, the 2.5 rems/yr represent the dose allowed at each of the FPL plants.

[b] Summation of the deep dose equivalent for external exposures and committed effective dose equivalent for internal exposures.

[c] Summation of the deep dose equivalent for external exposures and committed dose equivalent to an individual organ.

[d] Effective Dose Equivalent (EDE) may be used instead of DDE when monitoring is performed in non-uniform radiation fields using two or more whole body dosimeters. EDE is determined by summing each whole body dosimeter result after applying the appropriate weighting factor.

**END OF TABLE 1**

Examination Outline Cross-reference:

| Level | RO | SRO |
|---|---|---|
| Tier # | 3 | |
| Group # | Cat. 3 | |
| K/A # | 2.3.13 | |
| Importance Rating | 3.4 | |

Radiation Control: Knowledge of radiological safety procedures pertaining to licensed operator duties, such as response to radiation monitor alarms, containment entry requirements, fuel handling responsibilities, access to locked high-radiation areas, aligning filters, etc.

Proposed Question: RO 72

Unit 1 is in Mode 6. No fuel movement is in progress. You are the Board RCO when Channel MA Containment radiation monitor pegged high. The other channels are reading normal.

Which of the following is the correct sequence to be performed?

A. Announce Evacuation of the Containment. Notify HP to evaluate the Containment. Verify the validity of the alarm from the Control Room.

B. Verify the validity of the alarm from the Control Room. If valid alarm, announce evacuation of the Containment. Notify HP to evaluate the Containment.

C. Verify validity of the alarm from the Control Room. Notify HP to evaluate the Containment. If valid, announce Evacuation of the Containment.

D. Notify HP to evaluate the Containment. Announce Evacuation of the Containment. Verify the validity of the alarm from the Control Room.

Proposed Answer: A

Explanation (Optional):

A. Correct, procedure requires Containment evacuation FIRST, for ALL alarms, valid or not valid
B. Not Containment Evacuation FIRST
C. Not Containment Evacuation FIRST
D. Not Containment Evacuation FIRST

Technical Reference(s): 1-ONP-26.02 Area Radiation Alarms (Attach if not previously provided)

Proposed references to be provided to applicants during examination: _____

Learning Objective: 0702861-08 (As available)

| | | | |
|---|---|---|---|
| Question Source: | Bank # | | |
| | Modified Bank # | | (Note changes or attach parent) |
| | New | X | |
| Question History: | Last NRC Exam | | |
| Question Cognitive Level: | Memory or Fundamental Knowledge | X | |
| | Comprehension or Analysis | | |
| 10 CFR Part 55 Content: | 55.41 | 12 | |
| | 55.43 | | |

Comments:

a072



## 4.0 OPERATOR ACTIONS

### 4.1 Containment Isolation Radiation Monitors

**INSTRUCTIONS** **CONTINGENCY ACTIONS**

**NOTE**

If a containment evacuation alarm sounds with personnel inside containment, the Radiation Protection Manager or on-site designee must approve re-entry into the containment.

**1.** If a containment evacuation alarm has actuated and personnel are in the containment, Then:

**A.** ANNOUNCE over the Gaitronics for all personnel to leave their work in a safe condition and evacuate the containment.

**B.** NOTIFY HP to commence an evaluation of the containment radiological conditions.

**C.** CONTACT Security to perform personnel accountability for the evacuation.

**D.** ANNOUNCE over Gaitronics restoration of containment access when advised by Radiation Protection Manager that radiological conditions are safe for return to work.

**4.1** Containment Isolation Radiation Monitors (continued)

**INSTRUCTIONS** **CONTINGENCY ACTIONS**

**NOTE**

- A Containment Isolation signal is generated when at least two of the following monitors exceed the HIGH-HIGH alarm setpoint:
  - RIS-26-3-1
  - RIS-26-4-1
  - RIS-26-5-1
  - RIS-26-6-1
- Testing a second CIS monitor with one monitor in a HIGH-HIGH alarm condition will generate a CIS signal.

**2.** VERIFY the CIS monitor alarm is valid as follows:

**A.** VERIFY the blue FAIL SAFE light is LIT, indicating power available and no component failures.

**B.** CHECK the meter of the affected monitor to verify alarm conditions exist.

**C.** PERFORM the following to verify the HIGH ALARM and/or HIGH-HIGH ALARM setpoint:

**1.** PLACE the function selector switch in ALARM SET.

**2.1** If at least **ONE** of the following conditions exists:

- FAIL SAFE light is NOT LIT
- Meter indication does NOT indicate an alarm condition exists

**Then GO TO Appendix A**, Inoperable Monitor.

| Examination Outline Cross-reference: | Level | RO | SRO |
|---|---|---|---|
| | Tier # | 3 | |
| | Group # | Cat. 3 | |
| | K/A # | 2.4.13 | |
| | Importance Rating | 4.0 | |

Emergency Procedures / Plan: Knowledge of crew roles and responsibilities during EOP usage.

Proposed Question: RO 73

Which the following crew member responsibilities are performed during EOP-01 Standard Post trip actions?

A. Desk RCO will complete the MVA safety function, then, begin contingency actions to restore vital 4.16KV power to the unit with a blackout.

B. Board RCO performs a RCS cooldown to regain subcooling, if lost, while performing RCS pressure control safety function.

C. Desk RCO closes MV-08-814, spillover bypass after all other safety functions have been addressed.

D. Board RCO restores CCW to the RCP's (Appendix J), if lost, after addressing RCS pressure control.

Proposed Answer: A

Explanation (Optional):

A. Correct
B. Recent change to EOP-01 does not allow cooldown in EOP-01
C. MV-08-814 is closed while US and BRCO are performing Inventory and/or pressure control
D. Addressing status of safety functions is performed prior to Appendix J.

Technical Reference(s): Operations Department Policy OPS-521 (Attach if not previously provided)

Proposed references to be provided to applicants during examination: _____

Learning Objective: _____ (As available)

Question Source: Bank # _____

Modified Bank # _____ (Note changes or attach parent)

| | | |
|---|---|---|
| | New | X |
| Question History: | Last NRC Exam | |
| Question Cognitive Level: | Memory or Fundamental Knowledge | X |
| | Comprehension or Analysis | |
| 10 CFR Part 55 Content: | 55.41 | 10 |
| | 55.43 | |

Comments:

1. H. (continued)

6. During a SBO on either unit, the Unit 1 and Unit 2 DRCO's will complete the MVA safety function then begin the contingency actions to restore vital 4.16 power to the unit with a blackout. The BRCO will then work with the US to complete all the remaining SFSCs.

7. After the steps for each Safety Function within EOP-01 have been completed, the US should go through the Diagnostic Flow Chart with the SM and STA (if they are available). Once they concur on which EOP to transition to, the US will call a crew brief utilizing the Transition Brief Check Sheet.

8. To facilitate communications the US should pause between SFSCs to allow for question, requests, or information updates. The control room staff should wait until these pauses to transmit non-time critical information. Time critical information (e.g., not meeting a safety function, severe adverse trend, etc.) should be communicated to the US immediately and not delayed until the pause.

9. If an extra operator is available to the control room, this operator should be use primarily to silence alarms. Other duties, as directed by the US, are also acceptable (e.g., throttle AFW and App J).

I. Crew briefs during transient conditions, event response and EOP usage:

**NOTE**

The number and timing of crew briefs will be situational, depending on the event in progress.

1. Crew briefs should be held periodically during the event or transient as in the following cases:

   a. EOP Transitions (explain what was accomplished and why transition is occurring)

   b. Before a significant evolution or series of high level steps (i.e., energizing an emergency bus or checking to see if safety injection can be terminated)

   c. Significant plant or equipment status needs to be communicated to the entire crew.

/R9

1. H. (continued)

3. If a Safety Function is not being met or a contingency action must be taken, that information must be communicated to the US. The US will direct these contingency actions. This communication will utilize 4-parts.

4. Following completion of the Immediate Actions, the SM, US and RCOs should spend approximately one minute assessing plant status and acknowledging alarms.

   During this time the Desk RCO should:

   a. Announce on the Gaitronics **"Attention all Plant Personnel, the Unit 1 (2) Reactor has tripped."**

   b. NOTIFY the NPO to perform Appendix X, Section 1 of EOP-99

   c. CONTACT the STA and Shift Communicator to report to the Control Room and

   d. Close the MSR TCV block and/or warm-up valves.

   e. While the US and BRCO are performing the Inventory and/or Pressure Control safety function, the DRCO should CLOSE MV-08-814.

   The US / SM should:

   f. Mentally perform EOP-1 to quickly assess the status of the plant.

   g. Actions required to stabilize the plant may be taken at that time. (e.g., close an EDG breaker, start a charging pump, manually control S/G pressure)

1. H. (continued)

5. The US and RCOs, with procedure in hand, will perform the Standard Post Trip Actions together.

a. For the purpose of performing the SPTAs, the Board RCO should remain in the vicinity of, but is not limited to, 103 (203) to 105 (205). The Desk RCO should handle, but is not limited to, the balance of plant.

b. The US will ask the status of each Safety Function in turn. He will address the RCO responsible for the specific area of the RTGBs. It is expected that the US will work through the SPTAs as follows:

| | |
|---|---|
| Reactivity Control | Board RCO |
| Maintenance of Vital Auxiliaries | Desk RCO |
| Inventory Control | Board RCO |
| Pressure Control | Board RCO |
| Core Heat Removal | Board RCO |
| RCS Heat Removal | Desk RCO |
| Containment Conditions | Desk RCO |

c. The RCO will then verbalize each parameter with value trend and rate within that Safety Function while the US follows along in the procedure. When a parameter within a Safety Function (left hand column) is not met, the RCO will then verbalize the applicable contingency actions and their status. The US will, if appropriate, direct the RCO to take that action and will ensure that all applicable contingency actions are performed. When all applicable contingency action have been taken, the US will then direct the RCO to continue with the remainder of the Safety Function check.

d. Once all the steps within a Safety Function have **been taken**, the US will **state** that the Safety Function is "complete".

e. The RCO will then confirm that the US understands correctly (e.g., "That's correct.").

| Examination Outline Cross-reference: | Level | RO | SRO |
|---|---|---|---|
| | Tier # | 3 | |
| | Group # | Cat. 3 | |
| | K/A # | 2.4.22 | |
| | Importance Rating | 3.6 | |

Emergency Procedures / Plan: Knowledge of the bases for prioritizing safety functions during abnormal/emergency operations.

Proposed Question: RO 74

Unit 1 is in 1-EOP-15 with the following Safety Function status:

| SAFETY FUNCTION | SUCCESS PATH | |
|---|---|---|
| **Reactivity control** | RC-1 CEA Insertion | X |
| | RC-2 Boration via CVCS | |
| | RC-3 Boration via SIAS | |
| **Maint. Of Vital Aux – DC** | MVA – DC – 1 Batteries/Charger | X |
| **Maint. Of Vital Aux – AC** | MVA – AC – 1 Startup Transformers | |
| | MVA – AC – 2 EDG's | X |
| | MVA – AC – 3 Unit Crosstie | |
| **RCS Inventory Control** | IC – 1 CVCS | |
| | IC – 2 Safety Injection | O |
| **RCS Pressure Control** | PC - 1 Subcooled Controlled | |
| | PC – 2 PORV's / Pzr Vent | |
| | PC – 3 Saturated Control | X |
| **RCS & Core Heat** | HR – 1 S/G Without SIAS | |
| | HR – 2 S/G With SIAS | O |
| | HR – 3 Once Through Cooling | |
| **Containment Isol** | CI – 1 Automatic / Manual Isol | O |
| **Cntmt Press & Temp** | CTPC – 1 Normal Cntmt Fans | |
| | CTPC – 2 Cntmt Coolers | |
| | CTPC – 3 Cntmt Spray | X |
| **Cntmt Comb Gas** | CCGC – 1 Hydrogen <3.5% | X |
| | CCGC – 2 Hydrogen >3.5% | |

**O Not Met / X Met**

What Success Path should be addressed first and the reason for such?

A. Implement MVA-AC-2 EDGs. Reason: the EDG success path is evaluated to ensure power will be maintained to the equipment needed to support other safety functions.

B. Implement IC-2 Safety Injection. Reason: without adequate RCS inventory, core cooling will be challenged.

C. Implement HR-2 S/G with SIAS: Reason: RCS saturation margin needs to be maintained to ensure adequate core cooling.

D. Implement CI-1 Automatic / Manual Isol. Reason: Containment integrity ensures release to the public is minimized..

Proposed Answer: B

Explanation (Optional):

A. Safety function not met by ANY success path is addressed in the hierarchy of the chart.
B. Correct
C. HR – 2 S/G with SIAS is not the FIRST safety function that is not being met
D. CI – 1 Automatic / Manual Isol. is not the FIRST safety function that is not being met

Technical Reference(s): 1-EOP-15 Functional Recovery (Attach if not previously provided)

Proposed references to be provided to applicants during examination: _____

Learning Objective: 0702828-4 (As available)

Question Source: Bank # _____
Modified Bank # _____ (Note changes or attach parent)
New X

Question History: Last NRC Exam _____

Question Cognitive Level: Memory or Fundamental Knowledge _____
Comprehension or Analysis X

10 CFR Part 55 Content: 55.41 7
55.43 _____

Comments:

**4.0 OPERATOR INITIAL ACTIONS** (continued)

| INSTRUCTIONS | CONTINGENCY ACTIONS |
| --- | --- |
| * **12. Perform Success Path Instructions** | |
| PERFORM **ALL** the following, **IN THE ORDER LISTED:** | |
| **A.** Instructions for a success path **MOST LIKELY** to be met for safety functions that are NOT met by **ANY** success path. | |
| **B.** Instructions for success paths for safety functions that are NOT met by Success Path 1. | |
| **C.** Instructions for **ALL** other success paths for safety functions met by Success Path 1. | |
| * **13. Perform Long Term Actions** | |
| When **ALL** Safety Function Status Check acceptance criteria are being satisfied, Then PERFORM Long Term Actions. **REFER TO** Section 4.10, Long Term Actions. | |

**END OF INITIAL ACTIONS**

**4.0 OPERATOR INITIAL ACTIONS** (continued)

| INSTRUCTIONS | CONTINGENCY ACTIONS |
| --- | --- |
| * **9. Restore Instrument Air**<br><br>If a LOOP has occurred,<br>Then PERFORM **BOTH** of the following:<br><br>**A.** ENSURE 1AB 480V Load Center is aligned to an energized bus.<br><br>**B.** DISPATCH an operator to restore Instrument Air. **REFER TO** Appendix H, Operation of the 1A and 1B Instrument Air Compressors. | |
| * **10. Perform Safety Function Status Checks**<br><br>PERFORM the Safety Function Status Checks every 15 minutes. **REFER TO** Attachment 1, Safety Function Status Checks. | |
| * **11. Identify Success Paths**<br><br>IDENTIFY the success paths to be used to satisfy each safety function. **REFER TO** Attachment 3, Functional Recovery Success Paths. | |

Examination Outline Cross-reference:

| Level | RO | SRO |
|---|---|---|
| Tier # | 3 | |
| Group # | Cat.3 | |
| K/A # | 2.4.31 | |
| Importance Rating | 4.2 | |

Emergency Procedures / Plan: Knowledge of annunciator alarms, indications, or response procedures.

Proposed Question: RO 75

Unit 1 has tripped and is performing 1-EOP-01. Which of the following is observed to verify CCW flow to the running RCP's?

A. RCP CCW flow indications on RTGB-103.

B. Amber permissive light is lit.

C. At least one CCW pump operating with the 'N' header valves open.

D. The RCP CCW low flow annunciator is NOT in alarm.

Proposed Answer: D

Explanation (Optional):

A. Only Unit 2 has CCW flow meters on RTGB
B. Start only light. Light extinguishes after pump is started
C. Does not ensure adequate CCW flow
D. Correct

Technical Reference(s): 1-EOP-01 Standard Post Trip Actions (Attach if not previously provided)

Proposed references to be provided to applicants during examination: _____

Learning Objective: 0702822-9 (As available)

Question Source: Bank # _____
Modified Bank # 1308 (Note changes or attach parent)
New _____

Question History: Last NRC Exam _____

Question Cognitive Level: Memory or Fundamental Knowledge X
Comprehension or Analysis _____

10 CFR Part 55 Content: 55.41 10
55.43 _____

Comments:

Proposed references to be provided to applicants during examination (RO)

- EOP-99 Figures 1A and 1B

# Single Question Report

Ro 75

| | | | | |
|---|---|---|---|---|
| **QID#:** 1308 | **Objective:** 0702209-05 | | **System:** CCW | |
| **Rev:** 0 | **Cog Level:** 1 | **KA #** | **RO** 0.5 | **SRO** 0.5 |

What indication is used to determine adequate CCW flow to RCPs on Unit 1?

A. RCP CCW flow indicators on RTGB-103

B. RCP CCW flow indicators on RTGB-106

C. Absence of the RCP CCW low flow annunciator

D. Presence of a red light indication on at least one CCW pump breaker on RTGB-106

**Reasons the choices are right or wrong.**

**Correct answer is C.**

A.

B.

C.

D.

**Source Ref:**

**Open Ref:**

**Revision Notes:**

## Question Use History

HLC-16/SRO-12 SYSTEM BLOCK 2 EXAM REMEDIAL, 0720214, 3/10/2003

R075



**4.0 OPERATOR ACTIONS** (continued)

# CORE HEAT REMOVAL

| INSTRUCTIONS | CONTINGENCY ACTIONS |
|---|---|
| ☐ **5.** DETERMINE Core Heat Removal acceptance criteria are met: | |
| **A.** VERIFY at least **ONE** RCP is RUNNING <u>and</u> supplied with CCW. | **A.1** <u>If</u> CCW is LOST to the RCPs for greater than 10 minutes, <u>Then</u> STOP **ALL** RCPs. |
| **B.** VERIFY Loop $\Delta T$ is less than 10°F. | |