ENG.20080229.0007

QA: QA

000-3DR-MGR0-00300-000-002

February 2008

Basis of Design for the TAD Canister-Based Repository Design Concept

Prepared for:
U.S. Department of Energy
Office of Civilian Radioactive Waste Management
Office of Repository Development
1551 Hillshire Drive
Las Vegas, Nevada 89134-6321

Prepared by:
Bechtel SAIC Company, LLC
1180 Town Center Drive
Las Vegas, Nevada 89144

Under Contract Number
DE-AC28-01RW12101

DISCLAIMER

This document was developed by Bechtel SAIC Company, LLC (BSC) and is solely intended for the use of BSC in its work for the Yucca Mountain Project.

BSC	1. Basis of Design for the TAD Canister-Based Repository Design Concept **Coversheet** Complete only applicable items.	2. QA: QA Page iii of 320
3. DI: 000-3DR-MGR0-00300-000 Basis of Design for the TAD Canister-Based Repository Design Concept		4. Rev.: 002

5. REVIEWS AND APPROVAL

Printed Name	Title	Signature	Date
5a. Preparer: David Rhodes	Systems Engineering Discipline Engineering Manager	[signature]	2-29-08
5b. Concurrence: Richard Foster	Discipline Engineering Manager	[signature]	2/29/08
5c. Concurrence:	Project Engineering Manager	N/A	N/A
5d. Approved: Barbara Rusinko	Engineering Manager	[signature]	2/29/08

6. Remarks:

Coordination review of this document as defined in EG-PRO-3DP-G04B-00001, *Design Criteria*, Section 3.3, documents individual discipline and Project concurrence in accordance with EG-PRO-3DP-G04T-00913, *Review of Engineering Documents*.

BSC	1. Basis of Design for the TAD Canister-Based Repository Design Concept **Change History** Complete only applicable items.	2. QA: QA Page iv of 320
3. DI: 000-3DR-MGR0-00300-000-002 Basis of Design for the TAD Canister-Based Repository Design Concept		

7. Revision No.	8. Description of Change
000	Issue of this document supports closure of Condition Report 7360. This document cancelled the suite of existing System Description Document and Facility Description Document.
001	This revision is a major re-write. No annotations of changes are used. This revision incorporates additional design requirements, editorial changes, renumbering of sections and requirements, and updating the references that have been identified since the issuance of Revision 000. The following Criteria/Basis Change Notices, 000-3DR-MGR0-00300-000-000-CBCN001 through CBCN018 were incorporated into this revision of the BOD: 000-3DR-MGR0-00300-000-000-CBCN001 - Added the TN-68 Transportable Storage Cask (TSC) by Transnuclear, Inc., to the transport cask list and the rationales in requirements 5.2.1.1.4 - Receives Transportation Casks and 6.2.1.1.3 - Receives Transportation Casks. 000-3DR-MGR0-00300-000-000-CBCN002 - Deleted the inner Alloy-22 lid from the waste package. 000-3DR-MGR0-00300-000-000-CBCN003 - Removed the reference for the magma bulkheads. 000-3DR-MGR0-00300-000-000-CBCN004 - Removed description of the trolley designs in the IHF and CRCFs. 000-3DR-MGR0-00300-000-000-CBCN005 - Revised the description for the location of the IHF and the necessary support facilities. 000-3DR-MGR0-00300-000-000-CBCN006 - Revised the criteria and rationale to change the capability of the IHF to accommodate the NNPP M-290 transportation cask in place of the Naval 192 and 160 Canister Systems and explicitly indicated that the naval wastes will only be processed in the IHF. 000-3DR-MGR0-00300-000-000-CBCN007 - CRCF will not be designed to process the NNPP M-290 transportation cask. Deleted the CRCF criteria referencing naval canisters or casks. Deleted naval if a dual requirement (i.e., naval and other). 000-3DR-MGR0-00300-000-000-CBCN008 - CRCF will not be designed to process the NNPP M-290 transportation cask. Deleted the mechanical handling system criteria referencing naval canisters or casks in the CRCF. Deleted naval if a dual requirement (i.e., naval and other). 000-3DR-MGR0-00300-000-000-CBCN009 - Incorporated 000-30R-MGR0-01400-000-001, *Transport, Aging, and Disposal Canister System Basis of Specification Requirements Document* and 000-30R-MGR0-01200-000-001, *Transport, Aging, and Disposal Canister System Preliminary Performance Specifications Report* into the BOD chapters for interfaces with the TAD canister. 000-3DR-MGR0-00300-000-000-CBCN010 - In response to CR 9975, revised to provide consistent criteria text in the BOD for the IHF, CRCF, WHF, Receipt Facility, EDGF, Subsurface Facility, Surface Nuclear Confinement HVAC System, and Surface Non-Confinement HVAC System. The necessary wording from NUREG-0800 is now included in the criteria. The PDC will be revised separately. Other document changes for CR 9975 are not included in this CBCN. 000-3DR-MGR0-00300-000-000-CBCN011 - Revised all references of DOE O 473.1 to the applicable sections of DOE M 470.4-2 Change 1. BSC Prime Contract Modification M093 cancelled and removed DOE Order 473.1, *Physical Protection Program* from the contract and added DOE Manual 470.4-2 Change 1, *Physical Protection* to the contract. 000-3DR-MGR0-00300-000-000-CBCN012 - Revised the BOD to incorporate the revised throughput schedule criteria for the IHF, WHF, CRCFs, RF, and Subsurface Facility. 000-3DR-MGR0-00300-000-000-CBCN013 - Per CR 9728, clarified rationale statement for Criterion 4.2.1.5 to indicate – that although the CRCFs must be designed such that they can receive and handle three specific truck transportation casks systems (that may currently be licensed by the U.S. NRC for uncanistered SNF), that these uncanistered SNF casks are ONLY surrogates for receiving and handling until the NRC actually licenses other casks for shipping canisters of HLW and canisters of DOE SNF. This change also affects Criterion 3.2.1.3 for the IHF HLW capability and not DOE SNF. 000-3DR-MGR0-00300-000-000-CBCN014 - Per CR 9623, the suite of applicable IEDs for the repository is referenced in Chapters 8, 9, 11 and 12 of the BOD. Revised the BOD to incorporate the revisions to these IEDs in the applicable chapters. 000-3DR-MGR0-00300-000-000-CBCN015 - The following IEDs were cancelled and therefore removed from the BOD due to the transfer of work scope from BSC to the Lead Laboratory: 800-IED-WIS0-00901-000-00A, 800-IED-WIS0-01101-000-00B, and 800-IED-WIS0-01201-000-00A. See Correspondence Log No. 0214070386. 000-3DR-MGR0-00300-000-000-CBCN016 - CR 10425 identified that the postclosure performance objectives for radiological exposures are incorrectly stated in Criteria 2.2.3.2.1 and 11.2.3.1.11. Revised these criteria to state correct radiological

	information. This CBCN supported the closure of CR 10425. 000-3DR-MGR0-00300-000-000-CBCN017 - Added the following to the bulleted list currently in Section 13.1.2, System Classification, and to the rationale: Cask Preparation Crane, Spent Fuel Transfer Machine, Auxiliary Pool Crane, Waste Package Handling Crane(s), Grapples, and Jib Cranes. These items perform ITS functions and was specifically listed as ITS in the BOD classification sections. 000-3DR-MGR0-00300-000-000-CBCN018 - Incorporated the Emergency Response Facilities (ERF) functions to the appropriate repository facility, only indicating which facilities and systems would be utilized to fulfill the functions provided for in the NUREG, as provided by Regulatory Guidance Agreement REG-CRW-RG-000455, *Agreement for NUREG-0696, Functional Criteria for Emergency Response Facilities – Final Report*. Incorporated DOE and NNPP comments provided against Revision 000. Incorporated revisions from the following: fire hazard analysis of various facilities, *Project Operational and Performance Requirements*, *Postclosure Modeling & Analyses Design Parameters*, *Preliminary Preclosure Safety Classification of SSCs,* and the *Preliminary Preclosure Nuclear Safety Design Bases* engineering study. Incorporated annual throughput rates for nuclear facilities per closure of CR 10235. Incorporated CR 10700, which addresses the drift diameter in section 8.2.1.8. CR 10425 incorporated the proper postclosure performance objectives for radiological exposures into criterion 12 2 2.1. This revision incorporates the requirements contained in the High-Level Radioactive Waste and U.S. Department of Energy and Naval Spent Nuclear Fuel to the Civilian Radioactive Waste Management System." Volume 1 of *Integrated Interface Control Document.* DOE/RW-0511, Rev. 3 and DOE (U.S. Department of Energy) 2007. *Transportation, Aging and Disposal Canister System Performance Specification.* WMO-TADCS-000001, Rev. 0. The next revision of the BOD will incorporate requirements from the DOE (U.S. Department of Energy) 2007. *Waste Acceptance, Transportation, and Monitored Geologic Repository System Elements. Integrated Interface Control Document, Volume 2.* DOE/RW-0572, Rev. 0, ICD-CRW-WAT-000001. The next revision of the BOD will incorporate requirements from the DOE (U.S. Department of Energy) 2007. *Waste Acceptance, Transportation, and Monitored Geologic Repository System Elements. Integrated Interface Control Document, Volume 2.* DOE/RW-0572, Rev. 0, ICD-CRW-WAT-000001.
002	This revision incorporates additional design requirements, editorial changes, renumbering of sections and requirements, and updating the references identified since the issuance of revision 001. References were updated to the latest revision, as necessary. Incorporated the requirements from the following *Preclosure Nuclear Safety Design Bases,* 000-30R-MGR0-03500-000 Rev 000, *Waste Acceptance, Transportation, and Monitored Geologic Repository System Elements. Integrated Interface Control Document (IICD), Volume 2,* DOE/RW-0572, Rev. 0, and *Civilian Radioactive Waste Management System Requirements Document (CRD),* DOE/RW-0406, Rev. 08. The following Criteria/Basis Change Notices, 000-3DR-MGR0-00300-000-000-CBCN001 through CBCN010 were incorporated into this revision of the BOD: 000-3DR-MGR0-00300-000-001-CBCN001 - Incorporated by reference the revised *Preliminary Preclosure NSDB* revision 001 requirements into the BOD for use in the engineering products to support the LA. (Superceded by CBCN008) 000-3DR-MGR0-00300-000-001-CBCN002 - Implemented TMRB-2007-053 into the BOD, which provided Level 4 change control board approval to eliminate the Criticality Alarm System from the BOD. 000-3DR-MGR0-00300-000-001-CBCN003 - Added a criterion into the BOD in relation to naval waste packages requiring a standoff distance from faults. 000-3DR-MGR0-00300-000-001-CBCN004 - Revised the rationale and criterion 11.2.2.19 of the BOD for clarification of the WASRD acceptance criterion. This CBCN also provided clarification of criteria 3.2.1.9.6, 4.2.1.9.10 and 13.2.1.2.28 for the difference in the nominal and freestanding dimensions of the waste package cavity in the WASRD and IICD. 000-3DR-MGR0-00300-000-001-CBCN005 - Implemented TMRB-2007-042 into criteria 4.2.1.1, 9.3.2.4.1 and 13.1.1 of the BOD, which changed the use of the Aging Overpack and the horizontal STC. 000-3DR-MGR0-00300-000-001-CBCN006 - Implemented TMRB-2007-043, which removed the requirement from the BOD for backfill in the subsurface exhaust and access mains. 000-3DR-MGR0-00300-000-001-CBCN007 - CR 11449 identified that the MEE for the TEV provides maximum dimensions that were substantially less than the conceived values included in criterion 9.9.2.2.4 of the BOD. Revised the criterion to change the overly conservative TEV specifications for the crane rail design.

	000-3DR-MGR0-00300-000-001-CBCN008 - Incorporated by reference the revised *Preliminary Preclosure NSDB* Revision 002 requirements into the BOD for use in the engineering products to support the LA. These criteria were further revised by *Preclosure Nuclear Safety Design Bases,* 000-30R-MGR0-03500-000 Rev 000 000-3DR-MGR0-00300-000-001-CBCN009 - Revised the definition of the Geologic Repository Operations Area (GROA). 000-3DR-MGR0-00300-000-001-CBCN010 - Incorporated DOE Contracting Officer Letter No. 08-007, which directed BSC to provide flexibility for the repository thermal limits in the receipt and processing of the incoming waste stream to facilitate wider variation of the incoming commercial SNF waste steam. Incorporated the requirements from the *Postclosure Modeling & Analyses Design Parameters,* TDR-MGR-MD-000037 Revision 002, *Project Operational and Performance Requirements*, TDR-MGR-ME-000004 Revision 02, and *Q-List*, 000-30R-MGR0-00500-000 Revision 004.

Contents

1	**Introduction**	**4**
1.1	Background	4
1.2	Transportation, Aging, and Disposal Canister-Based Repository Concept	4
1.2.1	Requirements Documents	4
1.2.2	Facility Concepts	4
1.3	Repository Architecture	5
1.3.1	Facilities	5
1.3.2	Systems	5
1.4	Organization of Basis of Design	6
1.4.1	Chapters	6
1.4.2	Overview	6
1.4.3	Functional and Performance Requirements and Bases	6
1.4.4	Conformance Verification	7
2	**TAD Canister-Based Repository**	**8**
2.1	Overview	8
2.1.1	Introduction	8
2.1.2	System Classification	8
2.2	Functional and Performance Requirements and Bases	8
2.2.1	Mission Requirements	8
2.2.2	General Requirements	11
2.2.3	Safety and Protection Requirements	12
2.2.4	Miscellaneous Requirements	16
2.3	Conformance Verification	18
3	**Initial Handling Facility**	**21**
3.1	Overview	21
3.1.1	Introduction	21
3.1.2	System Classification	21
3.2	Functional and Performance Requirements and Bases	21
3.2.1	Mission Requirements	21
3.2.2	General Requirements	28
3.2.3	Safety and Protection Requirements	31
3.2.4	Miscellaneous Requirements	35
3.3	Conformance Verification	35

4	**Canister Receipt and Closure Facilities**	**38**
4.1	Overview	38
4.1.1	Introduction	38
4.1.2	System Classification	38
4.2	Functional and Performance Requirements and Bases	38
4.2.1	Mission Requirements	38
4.2.2	General Requirements	48
4.2.3	Safety and Protection Requirements	53
4.2.4	Miscellaneous Requirements	57
4.3	Conformance Verification	58
5	**Wet Handling Facility**	**62**
5.1	Overview	62
5.1.1	Introduction	62
5.1.2	System Classification	62
5.2	Functional and Performance Requirements and Bases	62
5.2.1	Mission Requirements	62
5.2.2	General Requirements	70
5.2.3	Safety and Protection Requirements	72
5.2.4	Miscellaneous Requirements	77
5.3	Conformance Verification	78
6	**Receipt Facility**	**81**
6.1	Overview	81
6.1.1	Introduction	81
6.1.2	System Classification	81
6.2	Functional and Performance Requirements And Bases	81
6.2.1	Mission Requirements	81
6.2.2	General Requirements	86
6.2.3	Safety and Protection Requirements	88
6.2.4	Miscellaneous Requirements	91
6.3	Conformance Verification	92
7	**Emergency Diesel Generator Facility**	**95**
7.1	Overview	95
7.1.1	Introduction	95
7.1.2	System Classification	95
7.2	Functional and Performance Requirements and Bases	95
7.2.1	Mission Requirements	95
7.2.2	General Requirements	95
7.2.3	Safety and Protection Requirements	95

7.2.4	Miscellaneous Requirements	98
7.3	Conformance Verification	98
8	**Subsurface Facility**	**99**
8.1	Overview	99
8.1.1	Introduction	99
8.1.2	System Classification	99
8.2	Functional and Performance Requirements and Bases	99
8.2.1	Mission Requirements	99
8.2.2	General Requirements	105
8.2.3	Safety and Protection Requirements	105
8.2.4	Miscellaneous Requirements	106
8.3	Conformance Verification	111
9	**Balance of Plant Facilities**	**114**
9.1	Central Control Center Facility	114
9.1.1	Overview	114
9.1.2	Functional and Performance Requirements and Bases	114
9.1.3	Conformance Verification	117
9.2	Standby Diesel Generator Facility	118
9.2.1	Overview	118
9.2.2	Functional and Performance Requirements and Bases	118
9.2.3	Conformance Verification	120
9.3	Warehouse and Non-Nuclear Receipt Facility	121
9.3.1	Overview	121
9.3.2	Functional and Performance Requirements and Bases	121
9.3.3	Conformance Verification	124
9.4	Heavy Equipment Maintenance Facility	124
9.4.1	Overview	124
9.4.2	Functional and Performance Requirements and Bases	125
9.4.3	Conformance Verification	127
9.5	Administration Facility	127
9.5.1	Overview	127
9.5.2	Functional and Performance Requirements and Bases	127
9.5.3	Conformance Verification	129
9.6	Fire, Rescue, and Medical Facility	130
9.6.1	Overview	130
9.6.2	Functional and Performance Requirements and Bases	130
9.6.3	Conformance Verification	132
9.7	Craft Shop	133
9.7.1	Overview	133

9.7.2	Functional and Performance Requirements and Bases	133
9.7.3	Conformance Verification	135
9.8	Site Roadways	136
9.8.1	Overview	136
9.8.2	Functional and Performance Requirements and Bases	136
9.8.3	Conformance Verification	139
9.9	Site Railways	140
9.9.1	Overview	140
9.9.2	Functional and Performance Requirements and Bases	140
9.9.3	Conformance Verification	143
9.10	Remaining BOP Facilities	144
9.10.1	Overview	144
9.10.2	Functional and Performance Requirements and Bases	144
9.10.3	Conformance Verification	151
10	**Aging Facility**	**153**
10.1	Overview	153
10.1.1	Introduction	153
10.1.2	System Classification	153
10.2	Functional and Performance Requirements and Bases	153
10.2.1	Mission Requirements	153
10.2.2	General Requirements	154
10.2.3	Safety and Protection Requirements	155
10.2.4	Miscellaneous Requirements	158
10.3	Conformance Verification	158
11	**DOE and Commercial Waste Package Systems**	**160**
11.1	Overview	160
11.1.1	Introduction	160
11.1.2	System Classification	160
11.2	Functional and Performance Requirements and Bases	160
11.2.1	Mission Requirements	160
11.2.2	General Requirements	161
11.2.3	Safety and Protection Requirements	166
11.2.4	Miscellaneous Requirements	168
11.3	Conformance Verification	171
12	**Naval SNF Waste Package System**	**173**
12.1	Overview	173
12.1.1	Introduction	173
12.1.2	System Classification	173

12.2 Functional and Performance Requirements and Bases 173
12.2.1 Mission Requirements 173
12.2.2 General Requirements 173
12.2.3 Safety and Protection Requirements 175
12.2.4 Miscellaneous Requirements 176
12.3 Conformance Verification 179

13 Mechanical Handling System 180
13.1 Overview 180
13.1.1 Introduction 180
13.1.2 System Classification 181
13.2 Functional and Performance Requirements and Bases 183
13.2.1 Mission Requirements 183
13.2.2 General Requirements 192
13.2.3 Safety and Protection Requirements 195
13.2.4 Miscellaneous Requirements 206
13.3 Conformance Verification 208

14 Emplacement and Retrieval/Drip Shield Installation System 212
14.1 Overview 212
14.1.1 Introduction 212
14.1.2 System Classification 212
14.2 Functional and Performance Requirements and Bases 212
14.2.1 Mission Requirements 212
14.2.2 General Requirements 213
14.2.3 Safety and Protection Requirements 213
14.2.4 Miscellaneous Requirements 214
14.3 Conformance Verification 214

15 Non-Nuclear Handling System 215
15.1 Overview 215
15.1.1 Introduction 215
15.1.2 System Classification 215
15.2 Functional and Performance Requirements and Bases 215
15.2.1 Mission Requirements 215
15.2.2 General Requirements 216
15.2.3 Safety and Protection Requirements 217
15.2.4 Miscellaneous Requirements 217
15.3 Conformance Verification 217

16 Electrical Power System 218

16.1 Overview 218
16.1.1 Introduction 218
16.1.2 System Classification 218
16.2 Functional and Performance Requirements and Bases 218
16.2.1 Mission Requirements 218
16.2.2 General Requirements 219
16.2.3 Safety and Protection Requirements 220
16.2.4 Miscellaneous Requirements 220
16.3 Conformance Verification 220

17 Electrical Support System 222

17.1 Overview 222
17.1.1 Introduction 222
17.1.2 System Classification 222
17.2 Functional and Performance Requirements and Bases 222
17.2.1 Mission Requirements 222
17.2.2 General Requirements 222
17.2.3 Safety and Protection Requirements 223
17.2.4 Miscellaneous Requirements 223
17.3 Conformance Verification 224

18 Fire Protection System 225

18.1 Overview 225
18.1.1 Introduction 225
18.1.2 System Classification 225
18.2 Functional and Performance Requirements and Bases 225
18.2.1 Mission Requirements 225
18.2.2 General Requirements 226
18.2.3 Safety and Protection Requirements 227
18.2.4 Miscellaneous Requirements 228
18.3 Conformance Verification 228

19 Surface Nuclear Confinement HVAC System 229

19.1 Overview 229
19.1.1 Introduction 229
19.1.2 System Classification 229
19.2 Functional and Performance Requirements and Bases 229
19.2.1 Mission Requirements 229
19.2.2 General Requirements 230
19.2.3 Safety and Protection Requirements 231

19.2.4 Miscellaneous Requirements 231
19.3 Conformance Verification 232

20 Surface Non-Confinement HVAC System 233
20.1 Overview 233
20.1.1 Introduction 233
20.1.2 System Classification 233
20.2 Functional and Performance Requirements and Bases 233
20.2.1 Mission Requirements 233
20.2.2 General Requirements 233
20.2.3 Safety and Protection Requirements 234
20.2.4 Miscellaneous Requirements 234
20.3 Conformance Verification 235

21 Plant Heating And Cooling System 236
21.1 Overview 236
21.1.1 Introduction 236
21.1.2 System Classification 236
21.2 Functional and Performance Requirements and Bases 236
21.2.1 Mission Requirements 236
21.2.2 General Requirements 236
21.2.3 Safety and Protection Requirements 236
21.2.4 Miscellaneous Requirements 237
21.3 Conformance Verification 237

22 Subsurface Ventilation System 238
22.1 Overview 238
22.1.1 Introduction 238
22.1.2 System Classification 238
22.2 Functional and Performance Requirements and Bases 238
22.2.1 Mission Requirements 238
22.2.2 General Requirements 239
22.2.3 Safety and Protection Requirements 240
22.2.4 Miscellaneous Requirements 241
22.3 Conformance Verification 241

23 Safeguards and Security System 243
23.1 Overview 243
23.1.1 Introduction 243
23.1.2 System Classification 243
23.2 Functional and Performance Requirements and Bases 243

23.2.1 Mission Requirements 243
23.2.2 General Requirements 246
23.2.3 Safety and Protection Requirements 249
23.2.4 Miscellaneous Requirements 249
23.3 Conformance Verification 250

24 Plant Services System 252
24.1 Overview 252
24.1.1 Introduction 252
24.1.2 System Classification 252
24.2 Functional and Performance Requirements and Bases 252
24.2.1 Mission Requirements 252
24.2.2 General Requirements 253
24.2.3 Safety and Protection Requirements 256
24.2.4 Miscellaneous Requirements 256
24.3 Conformance Verification 256

25 Communications System 258
25.1 Overview 258
25.1.1 Introduction 258
25.1.2 System Classification 258
25.2 Functional and Performance Requirements and Bases 258
25.2.1 Mission Requirements 258
25.2.2 General Requirements 259
25.2.3 Safety and Protection Requirements 260
25.2.4 Miscellaneous Requirements 260
25.3 Conformance Verification 260

26 Digital Control And Management Information System 262
26.1 Overview 262
26.1.1 Introduction 262
26.1.2 System Classification 262
26.2 Functional and Performance Requirements and Bases 262
26.2.1 Mission Requirements 262
26.2.2 General Requirements 263
26.2.3 Safety and Protection Requirements 263
26.2.4 Miscellaneous Requirements 264
26.3 Conformance Verification 264

27 Environmental/Meteorological Monitoring System 265
27.1 Overview 265

27.1.1	Introduction	265
27.1.2	System Classification	265
27.2	Functional and Performance Requirements and Bases	265
27.2.1	Mission Requirements	265
27.2.2	General Requirements	265
27.2.3	Safety and Protection Requirements	265
27.2.4	Miscellaneous Requirements	265
27.3	Conformance Verification	266
28	**Radiation/Radiological Monitoring System**	**268**
28.1	Overview	268
28.1.1	Introduction	268
28.1.2	System Classification	268
28.2	Functional and Performance Requirements and Bases	268
28.2.1	Mission Requirements	268
28.2.2	General Requirements	269
28.2.3	Safety and Protection Requirements	269
28.2.4	Miscellaneous Requirements	270
28.3	Conformance Verification	270
29	**Cask/Canister/Waste Package Process System**	**272**
29.1	Overview	272
29.1.1	Introduction	272
29.1.2	System Classification	272
29.2	Functional and Performance Requirements and Bases	272
29.2.1	Mission Requirements	272
29.2.2	General Requirements	273
29.2.3	Safety and Protection Requirements	273
29.2.4	Miscellaneous Requirements	274
29.3	Conformance Verification	274
30	**Low-Level Radioactive Waste Management System**	**275**
30.1	Overview	275
30.1.1	Introduction	275
30.1.2	System Classification	275
30.2	Functional and Performance Requirements and Bases	275
30.2.1	Mission Requirements	275
30.2.2	General Requirements	276
30.2.3	Safety and Protection Requirements	277
30.2.4	Miscellaneous Requirements	277
30.3	Conformance Verification	277

31	**Non-Radiological Waste Management System**	**278**
31.1	Overview	278
31.1.1	Introduction	278
31.1.2	System Classification	278
31.2	Functional and Performance Requirements and Bases	278
31.2.1	Mission Requirements	278
31.2.2	General Requirements	279
31.2.3	Safety and Protection Requirements	279
31.2.4	Miscellaneous Requirements	279
31.3	Conformance Verification	279
32	**Pool Water Treatment And Cooling System**	**281**
32.1	Overview	281
32.1.1	Introduction	281
32.1.2	System Classification	281
32.2	Functional and Performance Requirements and Bases	281
32.2.1	Mission Requirements	281
32.2.2	General Requirements	281
32.2.3	Safety and Protection Requirements	281
32.2.4	Miscellaneous Requirements	282
32.3	Conformance Verification	282
33	**TAD Canister-Based System**	**283**
33.1	Overview	283
33.1.1	Introduction	283
33.1.2	System Classification	283
33.2	Functional and Performance Requirements and Bases	283
33.2.1	TAD System Requirements	283
33.2.2	TAD Canister Requirements	283
33.2.3	Transportation Cask Requirements	295
33.2.4	Aging Overpack	299
33.2.5	TAD Cask Ancillary Equipment	305
33.2.6	TAD Shielded Transfer Cask	305
33.2.7	Site Transporter	305
33.3	Conformance Verification	305
34	**References**	**309**
34.1	Documents Cited	309
34.2	Codes, Standards, Regulations, and Procedures	316

Acronyms and Abbreviations

AAR	Association of American Railroads
AASHTO	American Association of State Highway and Transportation Officials
ADP	automated data processing
AF	Aging Facility
AO	aging overpack
ARM	area radiation monitor
BCP	baseline change proposal
BDBGM	beyond design basis ground motion
BOD	Basis of Design
BOP	Balance of Plant
BSC	Bechtel SAIC Company, LLC
BWR	boiling-water reactor
CAS	central alarm station
CCC	Central Control Center
CCCF	Central Control Center Facility
CCU	Correspondence Control Unit
CD	critical decision
CHLW	commercial high-level radioactive waste
CFR	Code of Federal Regulations
CO	Contracting Officer
CRCF	Canister Receipt and Closure Facility (or facilities)
CRD	*Civilian Radioactive Waste Management System Requirements Document*
CRWMS	Civilian Radioactive Waste Management System
CSNF	commercial spent nuclear fuel
CTM	canister transfer machine
DBGM	design basis ground motion
DBV	design basis vehicle
DCMIS	Digital Controls and Management Information System
DHLW	defense high-level radioactive waste
DIRS	document input reference system
DPC	dual-purpose canister
DOD	U.S. Department of Defense
DOE	U.S. Department of Energy
DOE-EM	DOE Office of Environmental Management
DOORS™	Dynamic Object Oriented Requirements System
DOT	U.S. Department of Transportation
DWPF	Defense Waste Processing Facility
EDGF	Emergency Diesel Generator Facility
EIS	environmental impact statement
EMMS	Environmental/Meteorological Monitoring System
EOC	Emergency Operations Center
EPA	U.S. Environmental Protection Agency
ET	eddy current testing
FHA	fire hazard analysis
FY	fiscal year
GA	General Atomics
GMAW	gas metal arc welding
GTAW	gas tungsten arc welding

GROA	Geologic Repository Operations Area
GSA	General Services Administration
HAM	horizontal aging module
HEMF	Heavy Equipment Maintenance Facility
HLW	high-level radioactive waste
HMI	human-machine interface
HVAC	heating, ventilation, and air conditioning
IAS	Integrated Acceptance Schedule
IBC	International Building Code
IDS	intrusion detection system
IED	information exchange drawing
IHF	Initial Handling Facility
IICD	*Integrated Interface Control Document*
INL	Idaho National Laboratory (formerly INEEL and ANL-West)
IOC	Initial Operating Capability
IPWF	immobilized plutonium waste form
ITS	important to safety
ITWI	important to waste isolation
LLW	low-level radioactive waste
LLWMS	Low-Level [Radioactive] Waste Management System
LWT	legal-weight truck
MCO	Multi-Canister Overpack
MCL	maximum contaminant levels
MGR-RD	*Monitored Geologic Repository System Requirements Document*
MOA	memorandum of agreement
MOX	mixed-oxide (fuel)
MPC	multi-purpose canister
MTHM	metric tons of heavy metal
MUTCD	*Manual on Uniform Traffic Control Devices*
NAC-STC	Nuclear Assurance Corporation - Storage and Transportation Cask
NFPA	National Fire Protection Association
NNPP	Naval Nuclear Propulsion Program
NRC	U.S. Nuclear Regulatory Commission
NRWMS	Non-Radiological Waste Management System
NSDB	nuclear safety design bases
NSNFP	National Spent Nuclear Fuel Program
NUREG	U.S. Nuclear Regulatory Commission technical report designation
NWPA	Nuclear Waste Policy Act
O	Order (as in DOE Order)
OCRWM	Office of Civilian Radioactive Waste Management
ORD	Office of Repository Development
OWT	over-weight truck
PDC	*Project Design Criteria Document*
PMADP	*Postclosure Modeling and Analyses Design Parameters*
PO&PR	*Project Operational and Performance Requirements*
PRD	*Project Requirements Document*
PWR	pressurized-water reactor

RCRA	Resource Conservation and Recovery Act
REMY	Rail Equipment Maintenance Yard
RGA	regulatory guidance agreement
RRMS	Radiation/Radiological Monitoring System
RPP-WTP	River Protection Project Waste Treatment Plant
S&S	Safeguards and Security System
SAS	secondary alarm station
SDGF	Standby Diesel Generator Facilities
SFC	spent fuel canister
SNF	spent nuclear fuel
SNM	special nuclear materials
SRS	Savannah River Site
SSC	systems, structures, and components
STC	shielded transfer cask
TAD	transportation, aging, and disposal
TDL	technical direction letter
TEDE	total effective dose equivalent
TEV	transport and emplacement vehicle
TN	TransNuclear, Inc.
TSC	Technical Support Center or transportable storage cask
TSD	treatment, storage, and disposal
TSRD	*Transportation System Requirements Document*
TWPS	TAD Waste Package Spacer
UO2	uranium-oxide (fuel)
UMS	Universal MPC System
UPS	uninterruptible power supply
UT	ultrasonic testing
VT	visual testing
WAC	waste acceptance criteria
WASRD	*Waste Acceptance System Requirements Document*
WBT	wet bulb temperature
WHF	Wet Handling Facility
WNNRF	Warehouse and Non-Nuclear Receipt Facility
WPTT	waste package transfer trolley
WVDP	West Valley Demonstration Project
YMP	Yucca Mountain Project
YMP-RD	*Yucca Mountain Site Characterization Project Requirements Document*

1 Introduction

1.1 Background

The Yucca Mountain Project (YMP) is the result of the need to dispose of the high-level radioactive waste (HLW) and spent nuclear fuel (SNF) resulting from the commercial operations of nuclear power plants and U.S. Department of Defense (DOD) and U.S. Department of Energy (DOE) operations over the last seven decades. The need for a repository was legislated by the Nuclear Waste Policy Act (NWPA) (as amended) [DIRS 100016].

The Bechtel SAIC Company, LLC (BSC) contract contains a list of DOE directives. DOE Level 1 and Level 2 change control boards have baselined several requirements documents to pass on technical and programmatic requirements to the contractor. The contractors have used various means to document those requirements for Engineering design activities. Previously, system description documents were used to apply requirements to a specific system or facility. The system description document authors reviewed all requirements and pulled out the appropriate requirements for each system. This provided a bottoms-up approach to managing requirements. With this bottoms-up approach, it was not possible to ensure that all requirements were accounted for and properly allocated to specific systems and facilities.

The *Project Requirements Document* (PRD) (Canori and Leitner 2003 [DIRS 166275]) was developed to capture all requirements applicable to the project and assign responsibility for implementing the requirements to specific organizations. This provided a top-down requirements allocation that would have eliminated any potential gaps in implementing requirements that were identified in the system description documents.

Changes were made to institute a new evaluation and allocation process and a real-time database to contain the requirements (Telelogic AB's Dynamic Object Oriented Requirements System (DOORS™). The programmatic and technical requirements that provide the basis for Engineering's design activities were initially placed into a *Dry Handling Repository Basis of Design* document that was drafted but not issued. This document replaces the dry handling concept with a cleaner handling concept involving the transportation, aging, and disposal (TAD) canister-based repository design concept. This document represents a list of facilities and systems that will constitute the proposed repository design to allow allocating requirements to specific facilities and systems and determining a level of performance to be assigned for the individual requirements pieces.

1.2 Transportation, Aging, and Disposal Canister-Based Repository Concept

1.2.1 Requirements Documents

DOE determined they should simplify the mechanical handling operational concept and provide for less handling of radioactive materials, thus reducing contamination and exposure risks and costs. The *Civilian Radioactive Waste Management System [CRWMS] Requirements Document* (CRD) (DOE 2007 [DIRS 182960]) and the *Monitored Geologic Repository Systems Requirements Document* (MGR-RD) (DOE 2006 [DIRS 177491]) provided requirements to BSC that address a repository design concept utilizing TAD canisters for the packaging and disposal of commercial SNF.

The DOE Contracting Officer letter, "Direction to Prepare a Revised Critical Decision-1 (CD-1) for Accepting and Handling Primarily Canisterized Fuel at the Yucca Mountain (YM) Repository; Contract Number DE-AC28-01RW12101" (Arthur 2005 [DIRS 175743]), and a subsequent letter that is privileged and unpublished provides BSC direction to proceed with a CD-1 technical baseline.

1.2.2 Facility Concepts

The TAD canister-based repository design concept relies on receiving most of the commercial SNF in TAD canisters. These canisters are handled but not opened within the Canister Receipt and Closure Facilities (CRCF-1, -2, and -3). The CRCFs' construction will be time phased, as necessary, to accommodate the expected receipt schedules and expected funding profiles.

A small fraction of the commercial SNF waste stream is expected to be shipped as uncanistered fuel or in dual-purpose canisters (DPCs) requiring repackaging into TAD canisters. These waste streams will be processed in the Wet Handling Facility (WHF). The commercial SNF received in TAD canisters that cannot be processed immediately in the CRCF and the DPCs that cannot be processed immediately in the WHF can be received in the Receipt Facility and transferred into aging overpacks and sent to the Aging Facility.

An Aging Facility will be provided for surface storage and aging TAD canisters and DPCs. The Aging Facility will provide for thermal aging and for process fluctuations to control loading sequences.

Naval spent fuel canisters (SFC) will be received and processed within an Initial Handling Facility (IHF). The IHF shall also be capable of receiving and processing defense high-level radioactive waste (DHLW) canisters.

Balance of Plant (BOP) facilities will provide the necessary infrastructure, support services, and operational support required for operating the repository nuclear handling facilities. The BOP facilities include security facilities, rail and truck yards, maintenance facilities, utility facilities, warehouse facilities, support facilities, administrative facilities, railways, roadways and other plant services.

The Subsurface Facility will provide ramps, access mains, emplacement drifts panels, ventilation, and safety systems for emplacing waste packages underground.

1.3 Repository Architecture

The YMP consists of several facilities and systems providing support to, and operating within, those facilities.

1.3.1 Facilities

The following major facilities include specific nuclear process facilities, a collection of support facilities, and underground emplacement facilities:

- Initial Handling Facility (IHF)
- Canister Receipt and Closure Facilities (CRCFs)
- Wet Handling Facility (WHF)
- Receipt Facility
- Emergency Diesel Generator Facility (EDGF)
- Subsurface Facility
- Balance of Plant
  - Central Control Center Facility (CCCF)
  - Standby Diesel Generator Facilities (SDGFs)
  - Warehouse and Non-Nuclear Receipt Facility (WNNRF)
  - Heavy Equipment Maintenance Facility (HEMF)
- Aging Facility

1.3.2 Systems

The major systems that support these facilities include:

- DOE and Commercial Waste Package System
- Naval SNF Waste Package System
- Mechanical Handling System
- Emplacement and Retrieval/Drip Shield Installation System
- Non-Nuclear Handling System
- Electrical Power System
- Electrical Support System
- Fire Protection System
- Surface Nuclear Confinement Heating, Ventilation, and Air-Conditioning (HVAC) System
- Surface Non-Confinement HVAC System
- Plant Heating and Cooling System
- Subsurface Ventilation System
- Safeguards and Security (S&S) System
- Plant Services System
- Communications System
- Digital Control and Management Information System (DCMIS)
- Environmental/Meteorological Monitoring System (EMMS)
- Radiation/Radiological Monitoring System
- Cask/Canister/Waste Package Process System
- Low-Level Radioactive Waste Management System

- Non-Radiological Waste Management System (NRWMS)
- Pool Water Treatment and Cooling System
- TAD Canister-Based System

1.4 Organization of Basis of Design

This Basis of Design is arranged such that there is a chapter containing all specified requirements for a particular facility or system.

1.4.1 Chapters

Chapter 2 contains high-level requirements that must be met by the repository, such as the overall throughput requirements or radiological release requirements. Chapters 3 through 10 provide requirements for the facilities listed in Section 1.3.1. Chapters 11 through 33 provide the requirements for the systems listed in Section 1.3.2.

1.4.2 Overview

Each chapter contains an overview of the facility or system. The overview includes a discussion of the purpose and primary function of the facility or system. The overview includes the facilities' or systems' classification as important to safety (ITS) or not important to safety (non-ITS). Additionally, those facilities and systems that are important to waste isolation (ITWI) or not important to waste isolation (non-ITWI) are also identified. SSCs that are non-ITS and do not have specific criteria identified in the *Preclosure Nuclear Safety Design Bases* (NSDB) (BSC 2008 [DIRS 184200]) are currently not listed in each chapter of the BOD. This may be reconsidered as the *Preclosure NSDB* evolves.

The Preclosure Safety Analysis (PCSA) group provided the safety classification of the structures, systems, and components (SSCs), identified in Section 1.3, from the *Preclosure NSDB* and other analysis documents. These documents replace the ITS extrapolations from the *Q-List* (BSC 2008 [DIRS 180109]), although, the Q-List still maintains the ITWI designations for the SSCs. Additional criteria will be obtained directly or by extrapolation from the *Preclosure NSDB* or the PCSA analysis documents that replace it.

1.4.3 Functional and Performance Requirements and Bases

Each chapter will include the functional and performance requirements and bases applicable to the system or facility. Functional and performance requirements will fall into similar classes of criteria. Except for Chapter 33 for the TAD System Components, these criteria will be grouped into mission requirements, general requirements, safety and protection requirements, and miscellaneous requirements.

Mission requirements are what the facility or system is intended to accomplish and how well it has to perform its primary function. These will include criteria from DOE requirements documents, baseline change proposals (BCPs), CO letters, and as directed by legislation.

General requirements include criteria of a construction nature such as facility classes, building structural type, design features, and interface requirements. Interface requirements include those from the "High-Level Radioactive Waste and U.S. Department of Energy and Naval Spent Nuclear Fuel to the Civilian Radioactive Waste Management System," Volume 1 of *Integrated Interface Control Document* (IICD) (DOE 2007 [DIRS 178792]) and from the "Waste Acceptance, Transportation, and Monitored Geologic Repository System Elements," Volume 2 of IICD (DOE 2007 [DIRS 176810]). Interface description documents or information exchange documents between the design organization and the science organizations will be included in the appropriate sections by reference.

Safety and protection requirements include those criteria defined by preclosure and postclosure analysis, NSDB criteria, hazard analyses criteria, occupational and industrial safety criteria, and safeguards and security requirements. Postclosure requirements provided within the *Postclosure Modeling and Analyses Design Parameters* (BSC 2008 [DIRS 183627]) are also incorporated in the appropriate sections. Internal constraints from the Postclosure Modeling and Analysis Design Parameters document are as defined in that document. Safety requirements derived from the *Preclosure NSDB* (BSC 2008 [DIRS 184200]) and other PCSA analysis documents identify safety functions (such as drop, breach, tipover, failure, collapse, runaway, etc.) in individual requirements.

Miscellaneous requirements will capture anything else deemed appropriate and applicable.

Chapter 33 for the TAD System components will be grouped by components and not the above categories. The majority of the TAD System component requirements were provided from a single source, *Transportation, Aging, and Disposal Canister System Performance Specification* (DOE 2007 [DIRS 181403]).

1.4.4 Conformance Verification

Each chapter includes a table for preliminary identification of the expected method of conformance verification for each requirement. This information will assist in determining whether the requirements and bases are detailed enough to allow measuring conformance at some future time and for providing input to the system and component test program that will be developed later. This preliminary conformance verification method will evolve throughout detailed design. The methods of conformance verification are:

Analysis-Analysis is the process of accumulating results and conclusions intended to verify that a requirement has been satisfied. Analytical verification of compliance may include compilation and interpretation of results of tests, demonstrations, and examinations of lower-level components of the system. Analysis may also include logical arguments, modeling, calculations, tradeoff studies, reports, and other relevant information to verify compliance with a requirement when physical testing of a system is impractical**.**

Examination-Examination is the process of conducting careful observation and inspection, without use of special laboratory appliances and procedures, to verify compliance with specified requirements. Examination is a relatively direct method involving, at most, simple physical manipulation or measurement. It is generally nondestructive and does not necessarily involve operation of the system being evaluated.

Demonstration-Demonstration is the qualitative process of displaying or operating a system or item in or near its operational environment to verify compliance with requirements. It differs from testing in that it is generally a qualitative and direct determination of the performance of a function and is performed without special instrumentation or other special equipment.

Review-Review is a subjective examination and evaluation of a system or facility design against its requirements and bases. Judgments will be made on whether the design should be capable of meeting or allowing the detailed design to meet the criteria. During the development of the detailed design and detailed design (output) criteria, this may be the only method of verification available.

Test-Test is the quantitative process whereby data are collected, under controlled conditions, to document the performance of a product with respect to a standard. Manipulation and analysis of data derived from testing is an integral part of the method. Special instrumentation and scientific procedures are commonly employed. A test may be conducted in a laboratory or in the field (in situ).

Not Applicable-Some requirements are of such as nature that they cannot be verified without the whole system or repository being included.

2 TAD Canister-Based Repository

2.1 Overview

2.1.1 Introduction

The repository collectively refers to the assorted facilities and systems located at Yucca Mountain that will provide for the disposal of SNF and HLW as provided in 10 Code of Federal Regulations (CFR) Part 63, Energy: Disposal of High-Level Radioactive Wastes in a Geologic Repository at Yucca Mountain, Nevada [DIRS 180319]. The repository consists of:

- Surface nuclear handling facilities and systems to receive the waste in U.S. Nuclear Regulatory Commission (NRC) certified or Naval Nuclear Propulsion Program (NNPP) transportation systems and to package the waste in appropriate waste packages for disposal,
- Subsurface facility to contain and isolate the emplaced waste packages, and
- BOP facilities and systems to provide for repository operations and to support handling and emplacement activities.

The facilities and systems are designed to receive transportation casks containing primarily TAD canisters of SNF, with the remaining waste streams encompassing some uncanistered SNF, DPCs, naval SNF canisters, DOE SNF, and defense and commercial HLW canisters.

2.1.2 System Classification

System classification statements will be provided for the facilities and systems in the subsequent chapters.

2.2 Functional and Performance Requirements and Bases

2.2.1 Mission Requirements

2.2.1.1 Repository Maximum Regulatory Capacity

The repository shall be designed to accept and dispose of 70,000 metric tons of heavy metal (MTHM) or the equivalent of SNF/HLW in the repository, allocated as follows:

- 63,000 MTHM of commercial SNF and [vitrified] HLW
- 4,667 MTHM of [vitrified] DHLW [including immobilized (vitrified) plutonium waste form (IPWF)]
- 2,333 MTHM of DOE SNF and naval SNF.

[CRD (DOE 2007 [DIRS 182960]), Section 3.2.1D and 3.2.1A, as flowed down through the MGR-RD [DIRS 177491], Section 3.1.1.F and 3.1.1.L. This text is appropriate and allocated to the repository and Subsurface Facility as the emplacement limits. The surface nuclear facilities will be designed to provide the throughput capability allocated to the repository and Subsurface Facility. This criteria also meets CRD Section 3.1.2D and MGR-RD Section 3.1.1.E. Although acceptance from DOE EM sites will be in accordance with the EM/RW MOA (DOE 2007) and from NNPP will be in accordance with the NNPP/RW MOA (Bowman and Itkin 2000), neither of these documents contain specific design criterion. They are embedded references and are not required to be tracked in the BOD.]

2.2.1.2 Annual Receipt Rates

The repository shall be designed to be capable of receiving SNF and HLW, mostly by rail, at the system operating conditions and receipt rates specified below (NOTES 1, 2, and 3):

1. To satisfy the Initial Operating Capability (IOC) in the first year of operations, the repository shall:
   a. Accept and receive 400 MTHM of commercial SNF and HLW
   b. Accept and receive at least 3 naval SNF canisters
   c. Accept and receive 66 DOE SNF canisters and 193 DHLW canisters.
2. Cumulatively during years 2 through 4 of operation, the repository shall:
   a. Accept and receive at least 3,800 MTHM of commercial SNF and HLW
   b. Accept and receive at least 15 naval SNF canisters
   c. Accept and receive at least 257 DOE SNF canisters and 1,143 DHLW canisters.
3. To satisfy the Full Operating Capability, in year 5 the repository shall:
   a. Accept and receive 3,000 MTHM of commercial SNF and HLW annually

b. Accept and receive at least 15 naval SNF canisters annually (Note 4)
c. Accept and receive 179 DOE SNF canisters and 763 DHLW canisters annually.

Notes:

1. The actual operational load is a function of the numbers, types, and sizes of casks and canisters in which the SNF and HLW are accepted from the points of origin. Since these specific numbers will not be determined until the purchaser/producer/custodian agreements are reached and schedules are established, the receipt rates are estimated in terms of desired systems-level acceptance rates.
2. The rates in this schedule are targets only and do not create any binding legal obligations on DOE.
3. The preliminary target receipt rates for naval SNF, DOE SNF, and HLW originate from the draft Integrated Acceptance Schedule (IAS).
4. NNPP activities can prepare up to 24 naval SNF canisters annually for shipment to the repository. For design purposes, this value (24) should be used for maximum receipt rates of naval SNF canisters.

In the event that DOE determines that rail access to the repository site will be unavailable to support system operating conditions and receipt rates, the acceptance rates above will not apply and will, instead, be based on the availability of truck transportation capability.

[CRD (DOE 2007 [DIRS 182960]), Sections 3.2.1B and 3.2.1C, as flowed down through the MGR-RD [DIRS 177491], Sections 3.1.1.J and 3.1.1.K. This text is appropriate and allocated to the repository surface nuclear facilities, BOP, Subsurface Facility, and mechanical handling systems. Although specific dates have been eliminated from the previous ramp-up table as they rely on annual funding, NRC licensing, and other conditions outside of contractor's control, the years identified are not specifically requirements on the contractor. Since operations of the various repository facilities are dependent on DOE funding and authorization of construction of the facilities, the dates have been considered as changed by DOE in the annual work plans authorized each fiscal year (FY).]

2.2.1.3 SNF Ratio

The repository shall be designed for the expected commercial SNF receipt rates identified in Section 2.2.1.2 in each year of operation, such that at least 90% of the SNF planned for acceptance that year are received in TAD canisters and no more than 10% are received as uncanistered assemblies in a cask or a DPC in rail or truck transportation casks.

[CRD (DOE 2007 [DIRS 182960]), Section 3.2.1C.2, as flowed down through the MGR-RD [DIRS 177491], Section 3.1.1.K. It is also included in Baseline Change Proposal (BCP) YMP-2006-053 (BSC 2006 [DIRS 177483]), Block 11, Page 12 of 1159 provides for a technical assumption that 90-95% of commercial waste will be received in TAD canisters. Although it specifies a 90/10 split, the design of individual facilities should provide for a maximum credible capability for variations in the waste stream. Since the concept of the TAD canister-based canister handling is new, it is reasonable to provide for some change in design capability. Different capabilities will be defined separately. This requirement is suballocated to only the surface nuclear handling facilities that handle commercial SNF; BOP, and mechanical handling system; the IHF is excluded. Whether or not bare fuel assemblies are received in DPCs is not part of this requirement. IICD Volume 2 (DOE 2007 [DIRS 176810]), Section 3.1.2.1 also contains this information.]

2.2.1.4 Initial Operating Capability

The repository surface and subsurface facilities shall be designed and constructed in phases with an IOC phase. Because the availability of DOE funding and prioritization for project construction authorizations are outside BSC control, the timing for achieving IOC is as specified by DOE and not considered a requirement on BSC. The IOC includes an IHF, a CRCF (CRCF-1), a WHF, and supporting surface and subsurface facilities that are capable of receiving the waste types listed in Criterion 2.2.1.1 at the rates specified in Criterion 2.2.1.2. The Receipt Facility and additional CRCFs are required to meet the ramp-up throughput rates.

[Although CO Letter, (Hamilton-Ray 2006 [DIRS 177484]), 2nd paragraph, provided direction to implement a particular baseline schedule for facility operations, with modification provided by BCP YMP-2006-053 [DIRS 177483], Block 11, Page 5 of 1159, the revised schedule is in Section 2.2.1.10. These dates will be used for planning and allocating throughput among the various facilities. CRD (DOE 2007 [DIRS 182960]), Section 3.5C, as flowed down through the MGR-RD [DIRS 177491], Section 3.1.1.T. Sell 2006 is an embedded reference in the CRD and is NOT a BOD reference requiring tracking. This criterion previously overlapped with Criterion 2.2.2.4. However, with the latest revision to the CRD, this is being consolidated. This also supersedes the modular criterion previously in 2.2.2.4.]

2.2.1.5 Material Inclusion

The repository shall be designed and constructed to accommodate the emplacement of 70,000 MTHM of SNF and HLW, as specified in the NWPA, as amended [DIRS 100016]. The repository shall not preclude, subject to approval of a license amendment, the ability to accept additional quantities of nuclear waste up to the projected inventory in the *Final Environmental Impact Statement for a Geologic Repository for the Disposal of Spent Nuclear Fuel and High Level Waste at Yucca Mountain, Nye County, Nevada (EIS)* (DOE 2002 [DIRS 155970]).

[CRD (DOE 2007 [DIRS 182960]), Section 3.5B, as flowed down through the MGR-RD [DIRS 177491], Section 3.2.12.A, provides for determining an available repository area to contain additional waste and for facilities that could have a life expectancy longer than the initial 25-year receipt period with proper maintenance and replacement.]

2.2.1.6 Retrievability of Waste

The geologic repository operations area (GROA) shall be designed to preserve the option of waste retrieval throughout the period during which waste is being emplaced and thereafter, until the completion of a performance confirmation program and NRC review of the information obtained from such a program. The GROA shall be designed so that any or all of the emplaced waste could be retrieved on a reasonable schedule starting at any time up to 50 years after waste emplacement operations are initiated.

[10 CFR 63.111(e)(1)-(3) [DIRS 180319]. This requirement may not preclude decisions by the NRC to allow backfilling in part, or all of, or permanent closure of the GROA before the end of the period of design for retrievability. A reasonable schedule for retrieval is one that would permit retrieval in about the same time as that required to construct the geologic repository operations area and emplace waste.]

2.2.1.7 Deleted

[This requirement was deleted. Although BCPs YMP-2006-043, Block 11, Page 3 [DIRS 177485] and YMP-2006-053, Block 11, Page 6 of 1159, [DIRS 177483] initially provided this requirement, DOE recently indicated that the IHF location is not a DOE Level 2 requirement, but a design feature that BSC could change within the thresholds of the baseline change process. Although this criteria previously included a specific trolley design, the design evolved and the specific citations are not required. BSC therefore, deleted the specific trolley design as a requirement in BCP YMP-2007-001 [DIRS 178867].]

2.2.1.8 Deleted

[This requirement was deleted. Although BCP YMP-2006-053 [DIRS 177483] initially provided for a first phase of construction, DOE recently determined that the specification of the particular facilities was not a DOE Level 2 requirement, but a design feature that BSC could change within the thresholds of the baseline change process. BSC, therefore, has deleted the specific facilities being brought on when as being in conflict with the current plan and already covered by the Initial Operating Capability described in Requirement 2.2.1.10. Changes were made in response to the annual work plan, BCP YMP-2007-001[DIRS 178867].]

2.2.1.9 GROA Boundaries

The Geologic Repository Operations Area means a high-level radioactive waste facility that is part of a geologic repository, including both surface and subsurface areas, where waste handling activities are conducted.

The GROA surface area boundary is the demarcation of the full extent of the Protected Area fence line within which the nuclear facilities handle and process the high-level radioactive wastes (HLW) for disposal, the restricted areas outside this fence line, and the Protected Area fenced areas around the surface structures for the Subsurface Ventilation System.

The facilities required to be located inside the GROA include (non-exclusively) the IHF, CRCF-1, CRCF-2, CRCF-3, WHF, Receipt Facility, the Aging Facility, Protected Area security stations (entry/exit control points), CCCF, and EDGF.

The GROA subsurface area includes ramps from the North, South, and North Construction Portals entrances to the access mains; the access mains, the emplacement drifts, and the inlet and exhaust shafts.

[10 CFR 63.2, Definitions, provides the initial sentence. Although BCP YMP-2006-053 [DIRS 177483], Block 11, Page 7 of 1159 initially only specified a couple of nuclear facilities within the GROA, it did not list all the necessary facilities or provide a sufficient boundary for the GROA. TMRB-2008-007 (BSC 2008 [DIRS 184963]) provides management direction to refine the definition of the GROA. This GROA definition leaves the remaining

BOP Facilities, such as the Administration Facility, the Utilities Facilities, and the Craft Shop, that are located outside the PA fence as still part of the repository facilities, but just not part of the GROA. The LA will request licensing of the full extent of the GROA. The Protected Area Fence line and the restricted areas outside the Protected Area fence line will demarcate the portion of the GROA where waste handling operations are occurring and where NRC shall regulate repository operations. DOE has authority to self regulate on the site outside the GROA, and in those areas of the GROA that are not performing waste handling operations.]

2.2.1.10 Schedule Information

The IHF and a portion of emplacement drifts in Panel 1 will be available for operations April 29, 2016. Construction complete for initial operations is scheduled for June 8, 2016, with IHF already operational and the WHF, CRCF-1, and the first portion of the Subsurface Facility providing the remainder of the IOC on March 31, 2017. The Receipt Facility is scheduled to be operational on April 30, 2018. CRCF-2 is scheduled to become operational February 28, 2020 and CRCF-3 on December 24, 2021.

[Although BCP YMP-2007-001 [DIRS 178867] OCRWM Level 0, 1, and 2 Milestones (Page 5 of 5) includes this information, these are the dates to be used for planning purposes and for allocating throughput among the various facilities. BCP YMP-2006-060 [DIRS 177878] Section 1.5.12 incorporated the initial emplacement drifts into Panel 1.]

2.2.1.11 Repository TAD System Interface

The repository shall receive the TAD transportation cask systems and dispose of the TAD canisters, as described by the *Transportation, Aging, and Disposal Canister System Performance Specification* (DOE 2007 [DIRS 181403]).

[CRD (DOE 2007 [DIRS 182960]), Section 3.2.1L specifically provides direction to comply with the TAD specification. Although this requirement provides for the entire repository, these requirements have been sub-allocated to each facility that must receive the transportation systems and handle the canisters, including the CRCFs that transfers TADs into waste packages, the WHF that will package the TAD canisters, the Receipt Facility that will receive the casks and pass through the canisters, Aging Facility that will provide for the TAD aging, the BOP that will receive all the transportation systems into the GROA, the WNNRF that will receive empty TAD canisters for loading in the WHF, the Mechanical Handling System that will handle each component and specifically provide shielded transfer casks, the Non-Nuclear Handling System that will prepare the TAD canisters to be loaded in the WHF, the Cask/Canister/Waste Package Process System that will prepare the casks including venting and draining, and the commercial SNF waste packages that will contain the TAD canisters. Allocation is not made to the IHF, as the TAD waste stream will not be handled there.]

2.2.2 General Requirements

2.2.2.1 Commercial Technologies

The repository shall utilize proven commercial technology to the maximum extent practical, including facilities and equipment previously reviewed and accepted by the NRC, as appropriate, which will satisfy the intended function of any SSC.

[CRD (DOE 2007 [DIRS 182960]), Section 3.2.1M, as flowed down through the MGR-RD [DIRS 177491], Section 3.1.1.Z.]

2.2.2.2 NRC Allowed Wastes

The repository shall only receive and dispose of SNF or HLW that is approved by license or certificate granted by the NRC under the NWPA, as amended [DIRS 100016]. The repository facilities and equipment are not subject to the treatment, storage, and disposal (TSD) facility requirements under the Resource Conservation and Recovery Act of 1976 [DIRS 103936].

[CRD (DOE 2007 [DIRS 182960]), Section 3.2.1E, as flowed down through the MGR-RD [DIRS 177491], Sections 3.1.1.M and 3.1.1.N. Waste Acceptance System Requirements Document (WASRD) (DOE 2007 [DIRS 169992]) Section 4.2.2 specifically indicates the repository waste stream will not contain any hazardous materials subject to RCRA.]

2.2.2.3 Storage and Transportation Technologies

The repository shall be designed to accommodate-TAD canisters, DPCs, DOE SNF standardized canisters; naval SNF canisters; HLW canisters; multi-canister overpacks (MCO), and limited quantities of bare SNF assemblies.

[CRD (DOE 2007 [DIRS 182960]), Section 3.2.1F, as flowed down through the MGR-RD [DIRS 177491], Section 3.1.1.O.]

2.2.2.4 Deleted

[This criterion was consolidated into Criterion 2.2.1.4 with the changes to CRD (DOE 2007 [DIRS 182960]), Section 3.5C, as flowed down through the MGR-RD [DIRS 177491], Section 3.1.1.T.]

2.2.2.5 Environmental Impact Statement Area

The surface facilities shall be located within the area analyzed for and described in the *Final Environmental Impact Statement for a Geologic Repository for the Disposal Spent Nuclear Fuel and High-Level Radioactive Waste at Yucca Mountain, Nye County, Nevada (EIS)* (DOE 2002 [DIRS 155970]).

[MGR-RD [DIRS 177491], Section 3.2.14.A. Statement revised slightly to identify the EIS document.]

2.2.2.6 Potential Preclosure Period

The repository shall be designed not to preclude permanent closure (for the full range of preclosure operating conditions) for up to 300 years after the start of waste emplacement.

[CRD (DOE 2007 [DIRS 182960]), Section 3.5D, as flowed down through the MGR-RD [DIRS 177491], Section 3.2.12.B.]

2.2.2.7 Receipt, Emplacement, and Preclosure Periods

The repository shall be designed for a 25-year receipt period and a 50-year emplacement period. This emplacement period defines the duration of the preclosure period for the surface facilities as 50 years. The additional ventilation required defines the duration of the preclosure period for the subsurface facilities as 100 years.

[BCP YMP-2006-053 [DIRS 177483], Block 11, Pages 8 and 12 of 1159. Although specific preclosure period durations are defined, facility operational needs and specific facility design lifetimes are not included in this requirement. It is expected that specific facility and the repository area design, operations, and maintenance needs will extend beyond these time periods. Specific extended operational requirements cannot be determined at this time and will have to be evaluated as long-term institutional needs are realized.]

2.2.2.8 Deleted

[This requirement was combined with Criterion 2.2.2.7.]

2.2.3 Safety and Protection Requirements

There are no specific nuclear safety design basis requirements allocated to the repository. All requirements from the *Preclosure NSDB* (BSC 2008 [DIRS 184200]), will be considered for potential application to the current facilities and systems and allocated to those specific facilities and systems in subsequent chapters.

2.2.3.1 Preclosure Radiation Standards

The following subsections identify the radiological performance requirements for the repository during the period of facility operations and prior to the permanent closure of the repository.

2.2.3.1.1 Exposure Protection Function

The GROA shall provide protection against radiation exposures and releases of radioactive material through permanent closure.

[10 CFR 63.111(a) [DIRS 180319]. This applies to all facilities at the repository and is not repeated for each facility or system.]

2.2.3.1.2 Radiation Design

The GROA must meet the radiation design requirements of 10 CFR 20 [DIRS 181962], *Standards for Protection Against Radiation* through permanent closure.

[10 CFR 63.111(a)(1) [DIRS 180319]. Specific design requirements from 10 CFR 20 [DIRS 181962] are included in the Project Design Criteria Document (PDC) (BSC 2007 [DIRS 179641]), Section 4.10, for the Nuclear Discipline. All disciplines must follow these requirements. This applies to all facilities at the repository and is not repeated for each facility or system.]

2.2.3.1.3 Demonstration of Radiological Performance

The repository shall be designed such that, by analysis, it can be demonstrated that normal operations at the repository will and do occur in compliance with 10 CFR 63 [DIRS 180319], Subpart K requirements before the NRC grants or continues a license for DOE to receive and possess radioactive material.

[10 CFR 63.203. This programmatic requirement cannot be performed by individual facilities or systems and is only allocated to the repository.]

2.2.3.1.4 Normal Operational Public Exposure

The repository shall be designed such that during normal operations and for Category 1 event sequences, the annual total effective dose equivalent (TEDE) (hereafter referred to as "dose") to any real member of the public located in the “general environment” beyond the boundary of the repository shall not exceed an annual dose of 15 mrem (0.15mSv) and to any real member of the public located beyond the boundary of the repository, but not in the “general environment” shall not exceed an annual dose of 100 mrem (1.0 mSv).

[10 CFR 63.111(a)(2), 10 CFR 63.202, and 10 CFR 63.204 [DIRS 180319]. This requirement is significantly less than but meets the requirements of DOE Order 5400.5 [DIRS 103956], Chapter II 1.a (100 mrem). Normal operations include (a) management and storage (as defined in 40 CFR 191.02 [DIRS 184252]) of radioactive material that (1) is subject to 40 CFR 191.03(a); and (2) occurs outside of the Yucca Mountain repository but within the Yucca Mountain site; and (b) Storage of radioactive material inside the YMP repository. For this purpose, storage is defined in section 10 CFR 63.202, a citation to 40 CFR 191 is indirect reference only. This a programmatic requirement that cannot be performed by individual facilities or systems and, thus, is only allocated to the repository. This dose limit is for the “whole body”. The general environment is “everywhere outside the Yucca Mountain Site, the Nellis Air Force Range, and the Nevada Test Site" in accordance with 10 CFR 63.204. The Nellis Air Force Range is presently known as the Nevada Test and Training Range. Exposure of individuals outside the site boundary, but not in the “general environment” is controlled by 10 CFR 20.1301 [DIRS 181962]. For members of the public in the YMP general environment, the dose performance objective of 10 CFR 63.204 provides a more restrictive dose criteria than provided by the performance objectives of 40 CFR 191.3(a) and DOE O 5400.5, Chapter II 1.c that were previously included in Criterion 2.2.3.1.7. The more restrictive criterion from 10 CFR 63.204 negates the need to specify separate whole body, thyroid, critical organ, or any organ criterion.]

2.2.3.1.5 GROA Aggregate Preclosure Exposures

The GROA shall be designed so that, taking into consideration Category 1 event sequences and until permanent closure has been completed, aggregate radiation exposures and the aggregate radiation levels in both restricted and unrestricted areas, and the aggregate releases of radioactive materials to unrestricted areas, will be maintained within the limits in Sections 2.2.3.1.2 and 2.2.3.1.4 (above).

[10 CFR 63.111(b)(1) [DIRS 180319]. This programmatic requirement cannot be performed by individual facilities or systems and is only allocated to the repository.]

2.2.3.1.6 Category 2 Event Sequence Radiation Limits

The GROA shall be designed so that, taking into consideration any single Category 2 event sequence and until permanent closure has been completed, no individual located on, or beyond, any point on the boundary of the site will receive, as a result of the single Category 2 event sequence, the more limiting of a TEDE of 5 rem (0.05 Sv), or the sum of the deep dose equivalent and committed dose equivalent to any individual organ or tissue (other than the lens of the eye) of 50 rem (0.5 Sv). The lens dose equivalent may not exceed 15 rem (0.15 Sv), and the shallow dose equivalent to skin may not exceed 50 rem (0.5 Sv).

[10 CFR 63.111(b)(2) [DIRS 180319]. This programmatic requirement cannot be performed by individual

facilities or systems and is only allocated to the repository. Although the values of the criterion for the "sum of the deep dose equivalent and committed dose equivalent to any individual organ or tissue (other than the lens of the eye)" and the "shallow dose equivalent to skin" were previously 10 times less than the regulatory limits to assure complying with the regulations, the latest revision of the WASRD (DOE 2007 [DIRS 169992]), Section 4.4.5, applies the 10 CFR 63.111(b)(2) criterion specifically to the naval SFC. Since the WASRD application now specifically allows submission of a constituent waste stream to be above the previously conservative limits, the criterion is restored to the original levels from 10 CFR 63.111(b)(2).]

2.2.3.1.7 Deleted

[The requirement for public combined annual dose equivalent was combined into Criterion 2.2.3.1.4. Although 40 CFR 191.03(a) [DIRS 184252] provides limits for whole, thyroid, other critical organs and DOE O 5400.5 [DIRS 103956], Chapter II 1.c, duplicates these requirements and adds the "any organ" limit, the requirements of Criterion 2.2.3.1.4 are more restrictive and negates the need to provide here in this criterion.]

2.2.3.1.8 Drinking Water Pathway Radiation Dose

The repository shall be designed to provide a level of protection for persons consuming the public water to receive an effective dose equivalent greater than 4 mrem (0.04 mSv) in a year. Combined radium-226 and radium-228 shall not exceed 5×10^{-9} micro Ci/ml and gross alpha activity (including radium-226 but excluding radon and uranium) shall not exceed 1.5×10^{-8} micro Ci/ml. The liquid effluents from DOE activities shall not cause private or public drinking water systems downstream of the facility discharge to exceed the drinking water radiological limits in 40 CFR 141, National Primary Drinking Water Regulations [DIRS 18425].

[DOE O 5400.5 [DIRS 103956], Chapter II 1.d provides for the entire requirement and 40 CFR 141 is only a reference. This programmatic requirement cannot be performed by individual facilities or systems and is only allocated to the repository.]

2.2.3.1.9 Public Dose from Radiological Air Emissions

The repository shall be designed and operated to constrain air emissions of radioactive material to the environment, excluding radon-222 and its daughters, such that the individual member of the public likely to receive the highest dose will not be expected to receive a TEDE in excess of 10 mrem (0.1 mSv) per year from these emissions.

[10 CFR 20.1101(d) [DIRS 181962] and DOE O 5400.5 [DIRS 103956] Chapter II 1.b. An operational dose constraint is an action level for the operational radiation protection program above which appropriate actions are required to prevent recurrence. Design provisions shall be provided to support compliance with this operational constraint. This programmatic requirement cannot be performed by individual facilities or systems, and is only allocated to the repository.]

2.2.3.1.10 Hazardous Air Pollutants - Radionuclides

The repository facilities outside the GROA (such as Plant Heating and Cooling System facilities) shall be designed to ensure emissions of radionuclides, other than radon but including iodine, to the ambient air shall not exceed those amounts that would cause any member of the public to receive in any year an effective dose equivalent of 10 mrem/yr.

[40 CFR 61.92 and 40 CFR 61.102(a) [DIRS 177522] provide duplicative standards and the rest of 40 CFR 61 provides for design and operations. This programmatic requirement cannot be performed by individual facilities or systems and is only allocated to those repository facilities outside the GROA. Facilities inside the GROA are under NRC jurisdiction and are not required to comply with these regulations on radionuclides. Radon is specifically excluded from this requirement. Although 40 CFR 61.102 (a) specifically does not apply to NRC Licensees, it is the same standard as that which does apply.]

2.2.3.1.11 Hazardous Air Pollutants - Iodine

The repository facilities outside the GROA (such as Plant Heating and Cooling System facilities) shall be designed to ensure that emissions of iodine to the ambient air shall not exceed those amounts that would cause any member of the public to receive in any year an effective dose equivalent of 3 mrem/yr.

[40 CFR 61.102(b) [DIRS 177522] provides the standard and the rest of 40 CFR 61 provides for design and operations. This programmatic requirement cannot be performed by individual facilities or systems and is only allocated to the repository facilities outside the GROA. Facilities inside the GROA are under NRC jurisdiction and are not required to comply with these regulations on radionuclides. Although 40 CFR 61.102 (b) specifically

does not apply to NRC Licensees, it was not provided for in 40 CFR 61.92 and does provide an acceptable standard.]

2.2.3.1.12 Radon Exposure Minimization

The repository facilities shall minimize naturally occurring radon exposure to a degree consistent with the risk to personnel. The repository shall limit radon exposures by using design features and shall provide airborne monitoring for radon.

[Although this criterion was originally allocated only to the BOP facilities, it should apply to any of the repository facilities, and was thus moved from Section 9.10. Radon exposures are not controlled under NRC regulations.]

2.2.3.1.13 Transportation Cask Unloading

The repository shall route any cask transporting canistered CSNF or DOE SNF which is damaged in transit or whose delivery has been delayed 30 days beyond its scheduled receipt (or an alternative delay period that has been shown to allow pressure build up that exceeds the manufacturer's specifications) for sampling and remediation.

[10 CFR 71.35(c) [DIRS 181967] requires that any application for fissile material shipment must include special controls and precautions for transport, loading, unloading, and handling and any proposed special controls in case of an accident or delay. Thirty days was selected until a specific need is analyzed for the delay. Alternately the 30-day period can be modified based on transportation delays that cause gas build up exceeding the cask manufacturer's specifications. Although special controls are not specified, for ALARA considerations it is prudent to sample the cavity gas to evaluate whether damage has occurred that would potentially make problems for releases before releasing the cavity gas to the HVAC system. Although requirements are not yet available from the DOE, this CSNF requirement is also applied to DOE SNF. When received, DOE requirements will be evaluated. DOE SNF will not be received in the WHF unless remediation is required. The WHF is the repository facility designated for remediation activities. Although the Engineering Study Transportation Cask Gas Sampling Requirements Analysis, (BSC 2007 [DIRS 181530]) has determined the need for this requirement, it does not provide any direction before receipt into the nuclear facilities. Although the study only requires gas-sampling capability in the WHF and cask venting in the others, project direction is to have the capability in each nuclear facility (Slovic 2007 [DIRS 184156]).]

2.2.3.2 Postclosure Radiation Standards

The following requirements identify the radiological requirements for the long-term performance of the repository (i.e., for the period following permanent closure of the repository).

2.2.3.2.1 Public Radiological Exposure

The engineered barrier system shall be designed so that, working in combination with natural barriers, there is reasonable expectation that, for 10,000 years following disposal, the reasonably maximally exposed individual receives no more than an annual dose of 15 mrem (0.15 mSv) from releases from the undisturbed Yucca Mountain disposal system.

[10 CFR 63.113(b) and 10 CFR 63.311 [DIRS 180319]. This programmatic requirement cannot be performed by individual facilities or systems and is only allocated to the repository. This criterion was corrected in response to CR 10425.]

2.2.3.2.2 Release of Radionuclides into the Environment

The engineered barrier system shall be designed so that, working in combination with natural barriers, there is reasonable expectation that, for 10,000 years following disposal, releases of radionuclides into the accessible environment are within the performance objectives of the geologic repository (the following limits on radionuclides in the representative volume of groundwater):

- Combined radium-226 and radium-228 are less than 5 picocuries per liter (including natural background)
- Gross alpha activity (including radium-226 but excluding radon and uranium) is less than 15 picocuries per liter (including natural background)
- Combined beta and photon emitting radionuclides are less than 4 mrem (0.04 mSv) per year to the whole body or any organ, based on drinking 2 liters of water per day from the representative volume (excluding natural background).

[10 CFR 63.113(c) and 10 CFR 63.331 [DIRS 180319], Table 1-Limits on Radionuclides in the Representative Volume. This programmatic requirement cannot be performed by individual facilities or systems and is only

allocated to the repository. This criterion was corrected in response to CR 10425.]

2.2.3.3 Atmospheric Quality Requirements

The following additional requirements apply during construction, operations, and preclosure periods of the repository.

2.2.3.3.1 Atmospheric Discharges

Repository activities that result in discharges to air, such as boiler operations, diesel-powered pumps, etc., shall limit the discharges of sulfur oxides, 10- and 2.5-micrometer particulates, carbon monoxide, ozone, nitrogen dioxide and lead such that the repository complies with the requirements of 40 CFR 50, Protection of Environment: National Primary and Secondary Ambient Air Quality Standards [DIRS 184250].

[40 CFR 50.4, 50.5, 50.6, 50.7, 50.8, 50.9, 50.10, 50.11, and 50.12 [DIRS 184250] are the sections that provide the standards. The repository will also be monitored for nitrogen oxide and total carbon to ensure emissions are limited in the subsurface and enclosed facilities. This programmatic requirement cannot be performed by individual facilities or systems and is only allocated to the repository.]

2.2.3.3.2 Hazardous Air Pollutants - Beryllium

The repository shall be designed to ensure emissions to the atmosphere from stationary sources subject to the provisions of 40 CFR 61, National Emission Standards for Hazardous Air Pollutants [DIRS 177522], shall not exceed 10 grams (0.022 lb) of beryllium over a 24-hour period.

[40 CFR 61.32(a) provides the standard and the rest of 40 CFR 61 provides for design and operations. This programmatic requirement cannot be performed by individual facilities or systems and is only allocated to the repository.]

2.2.4 Miscellaneous Requirements

2.2.4.1 Collection of Solid Wastes

All repository facilities that generate solid waste shall provide for the efficient and safe collection, and for the interim storage of, the anticipated volume of solid waste to be generated within the facility. This space shall be easily cleanable and maintainable.

[40 CFR 243.200-1(d) [DIRS 184246].]

2.2.4.2 Seismic Monitoring Equipment

The repository shall provide instrumentation or other means to detect and record the occurrence and severity of seismic events.

[DOE O 420.1A [DIRS 159450], Contractor Requirement 4.4.5. Since the repository will have hazardous materials, the contractor/operator is required to provide this equipment. This requirement is implemented through Chapter 27.]

2.2.4.3 Handicap Access

Each repository building or part of a building shall be designed, constructed, or altered so as to be readily accessible to and usable by handicapped persons.

[10 CFR 1041.151 [DIRS 181979]. This criteria will not be repeated for each repository facility.]

2.2.4.4 Nuclear Facility Design

Nuclear facilities shall be designed with multiple layers of protection to prevent or mitigate the unintended release of radioactive materials to the environment.

Facilities shall be sited and designed in such a manner that gives adequate protection for the health and safety of the public and for workers, including those at adjacent facilities, from the effects of potential facility accidents involving the release of radioactive materials. All nuclear facilities with uncontained radioactive materials (as opposed to material contained within drums, grout, and vitrified materials) shall have means to confine them.

[The first two paragraphs of DOE O 420.1A [DIRS 159450], Contractor Requirement 4.1.1.2 calls for these

criteria. Defense in depth shall include: sitting, minimization of material at risk, the use of conservative design margins and quality assurance; the use of successive physical barriers for protection against the release of radioactivity; the provision of multiple means to ensure critical safety functions (those basic safety functions needed to control the processes, maintain them in a safe state, and to continue and mitigate radioactivity associated with the potential for accidents with significant public radiological impact); the use of equipment and administrative controls which restrict deviations from normal operations and provide for recovery from accidents to achieve a safe condition; means to monitor accident releases required for emergency responses; and the provision of emergency plans for minimizing the effects of an accident.

Confinement will act to minimize the spread of radioactive materials and the release of radioactive materials in facility effluents during normal operations and potential accidents. For a specific nuclear facility, the number and arrangement of confinement barriers and their required characteristics shall be determined on a case-by-case basis. Factors that shall be considered in confinement system design shall include type, quantity, form, and conditions for dispersing the material. Engineering evaluations, trade-offs, and experience shall be used to develop practical designs that achieve confinement system objectives. The adequacy of confinement systems to effectively perform the required functions shall be documented and accepted through the SAR.]

2.2.4.5 Land Reclamation

Lands disturbed by the repository shall be reclaimed following the *Reclamation Implementation Plan* (YMP 2001 [DIRS 154386]) as established in the *FEIS* (DOE 2002 [155970]) to ensure that there are no preclosure disturbances that will impact postclosure performance.

[Postclosure Modeling and Analyses Design Parameters (BSC 2008 [DIRS 183627)], Table 1, item # 09-04.]

2.2.4.6 Joint Convention Principles

The repository shall comply with the applicable principles of the *Joint Convention on the Safety for Spent Fuel Management and on the Safety of Radioactive Waste Management* (INFCIRC/546) [DIRS 171935].

[CRD (DOE 2007 [DIRS 182960]), Section 3.1.1E and MGR-RD [DIRS 177491], Section 3.1.1.AF.]

2.2.4.7 Services and Equipment

Physical services and equipment shall be provided at a level of availability and quality consistent with operational requirements. Sufficient space and means to maintain physical services and equipment shall be provided, including but not limited to:

- Spare parts
- Tools (calibrated and non-calibrated)
- Instruments (calibrated and non-calibrated)
- Machining
- Carpentry
- Welding
- Instrument laboratory
- Piping
- Electrical power distribution
- Heavy equipment repair
- Manipulator repair
- Security systems repair

[Project Operational and Performance Requirements (PO&PR) (BSC 2008 [DIRS 185008]), Section 2.7.22. Allocated to the repository because of the multiple facilities that must be serviced including the nuclear facilities.]

2.2.4.8 Equipment Availability

The facility equipment at a level of availability and quality to assure operational constraints can be performed shall be maintained.

[PO&PR (BSC 2008 [DIRS 185008]), Section 2.7.23. Allocated to the repository because of the multiple facilities that must be serviced including the nuclear facilities.]

2.2.4.9 Equipment Radiation Damage

The facility equipment shall be protected from radiation damage, to the extent practicable, under normal and off-normal conditions.

[PO&PR (BSC 2008 [DIRS 185008]), Section 3.2.1. Allocated to the repository because of the multiple facilities that must be serviced including the nuclear facilities.]

2.2.4.10 Personnel Decontamination

The capability shall be provided to decontaminate personnel. Personnel decontamination shall be performed at the work location in predetermined stations or in occupational medical facilities, as necessary.

[PO&PR (BSC 2008 [DIRS 185008]), Section 3.2.2 and 2.7.6. Allocated to the repository because of the multiple facilities that must be serviced including the nuclear facilities.]

2.2.4.11 Use of Temporary Shielding on Transportation Casks

Transportation packages at the MGR shall meet the worker and public radiation protection standards of 10 CFR 71.47(b) [DIRS 181967], taking credit only for shielding permanently attached to the cask. Any temporary shielding shall conform to the requirements of the NRC and U.S. Department of Transportation (DOT) prior to its use.

[IICD Volume 2 (DOE 2007 [DIRS 176810]), Section 3.1.1. Supplemental shielding attached to a conveyance or to a support skid may be used to meet special circumstances that may arise from time to time; advance notification will be provided and delivery will be delayed until special procedures and equipment are in place.]

2.2.4.12 Cask As-Shipped and Certified Configuration

Transportation casks received into the GROA will remain in their as-shipped and certified configuration until they enter a GROA surface facility for processing and unloading.

[IICD Volume 2 (DOE 2007 [DIRS 176810]), Section 3.1.1. The IICD defines the package to mean the packaging together with its radioactive contents as presented for transport, where packaging means the assembly of components necessary to ensure compliance with the packaging requirements of 10 CFR 71 [DIRS 181967]. It may consist of one or more receptacles, absorbent materials, spacing structures, thermal insulation, radiation shielding, and devices for cooling or absorbing mechanical shocks. (It can be read that spacing structures are the personnel barriers.) The vehicle, tie-down system, and auxiliary equipment may be designated as part of the packaging. Although processing and unloading casks in the GROA will be carried out in accordance with the 10 CFR 63 [DIRS 180319] license requirements, which will include demonstration of acceptable reliability, this demonstration is not part of the design criterion.]

2.3 Conformance Verification

Table 2-1. Repository Conformance Verification

Criterion		Preliminary Verification Method					
Number	**Description**	**N/A**	**Analyses**	**Exam**	**Demo**	**Review**	**Test**
2.2.1.1	Repository Maximum Regulatory Capacity					X	
2.2.1.2	Annual Receipt Rates		X				
2.2.1.3	SNF Ratio					X	
2.2.1.4	Initial Operating Capability					X	
2.2.1.5	Material Inclusion					X	
2.2.1.6	Retrievability of Waste	X					
2.2.1.7	Deleted	--	--	--	--	--	--
2.2.1.8	Deleted	--	--	--	--	--	--
2.2.1.9	GROA Boundaries					X	
2.2.1.10	Schedule Information	X					
2.2.1.11	Repository TAD System Interface					X	
2.2.2.1	Commercial Technologies	X					
2.2.2.2	NRC Allowed Wastes	X					
2.2.2.3	Storage and Transportation Technologies					X	
2.2.2.4	Deleted	--	--	--	--	--	--
2.2.2.5	Environmental Impact Statement Area	X					
2.2.2.6	Potential Preclosure Period	X					
2.2.2.7	Receipt, Emplacement, and Preclosure Periods	X					
2.2.2.8	Deleted	--	--	--	--	--	--
2.2.3.1.1	Exposure Protection Function					X	
2.2.3.1.2	Radiation Design					X	
2.2.3.1.3	Demonstration of Radiological Performance		X				
2.2.3.1.4	Normal Operational Public Exposures		X				
2.2.3.1.5	GROA Aggregate Preclosure Exposures		X				
2.2.3.1.6	Category 2 Event Sequence Radiation Limits		X				
2.2.3.1.7	Deleted	--	--	--	--	--	--
2.2.3.1.8	Drinking Water Pathway Radiation Dose		X				
2.2.3.1.9	Public Dose from Radiological Air Emissions		X				
2.2.3.1.10	Hazardous Air Pollutants – Radionuclides	X					
2.2.3.1.11	Hazardous Air Pollutants – Iodine	X					
2.2.3.1.12	Radon Exposure Minimization					X	
2.2.3.1.13	Transportation Cask Unloading					X	
2.2.3.2.1	Public Radiological Exposure		X				
2.2.3.2.2	Release of Radionuclides into the Environment					X	
2.2.3.3.1	Atmospheric Discharges		X				
2.2.3.3.2	Hazardous Air Pollutants – Beryllium	X					
2.2.4.1	Collection of Solid Wastes					X	
2.2.4.2	Seismic Monitoring Equipment					X	
2.2.4.3	Handicap Access					X	
2.2.4.4	Nuclear Facility Design					X	

Table 2-1. Repository Conformance Verification (Continued)

Criterion		Preliminary Verification Method					
Number	**Description**	**N/A**	**Analyses**	**Exam**	**Demo**	**Review**	**Test**
2.2.4.5	Land Reclamation					X	
2.2.4.6	Joint Convention Principles					X	
2.2.4.7	Services and Equipment					X	
2.2.4.8	Equipment Availability					X	
2.2.4.9	Equipment Radiation Damage					X	
2.2.4.10	Personnel Decontamination					X	
2.2.4.11	Use of Temporary Shielding on Transportation Casks					X	
2.2.4.12	Cask As-Shipped and Certified Configuration					X	

3 Initial Handling Facility

3.1 Overview

3.1.1 Introduction

The IHF provides processing capability for a portion of the DOE managed waste stream. The waste stream for the IHF is limited to naval SNF canisters and DOE HLW canisters. Waste brought in to the IHF is transferred directly to a waste package, the waste package is welded closed and is sent out for emplacement.

Primary waste receipt into the IHF is via rail service; however, if rail is not available, legal- or over-weight truck (LWT or OWT, respectively) transportation casks may deliver DOE HLW canisters one at a time. (Unless specifically annotated in a criterion, all reference to LWT or OWT will be cited as LWT only but include OWT). Naval SNF canisters will only be shipped via rail. (Heavy-haul vehicles will not be received at the repository.)

The IHF shall provide space for mechanical handling systems necessary to receive and inspect transportation casks, remove the transportation casks from their conveyance, prepare the transportation casks for unloading, and transfer the contents of the transportation casks into waste packages. Once a waste package is loaded, it is then sealed, down-ended, and transferred to the transport and emplacement vehicle (TEV). Unloaded transportation casks are prepared for return to the national transportation system within the IHF cask receiving area.

In addition, the IHF provides space and layout for industrial and radiological safety systems; limited operational control and monitoring, safeguards and security systems, fire protection systems, ventilation systems, and utility systems. The IHF also provides the required space and layout for maintenance and administrative support, if required.

3.1.2 System Classification

The IHF has been classified as ITS because there are Category 2 events that could occur in the IHF and features of the facility to prevent, reduce the frequency, or mitigate consequences. The structure is ITS because it reduces the frequency of building collapse which maintains the waste form container integrity and maintains personnel shielding. Rails for the TEV (inside the building), rails for the waste package transfer trolley, shield doors (including anchorages), confinement doors, cask port slide gate, waste package port slide gate, and cask preparation platform are ITS.

Rails for the commercial railcars (inside the building), ALARA shielding features, IHF loadout platforms, and waste package transfer carriage docking station are non-ITS. The IHF does not include SSCs that are ITWI.

[Preclosure NSDB (BSC 2008 [DIRS 184200]), Appendix A, Table A-1 specifically provides the classification of the system SSCs and Appendix B, Table B-1 provides the functions.]

3.2 Functional and Performance Requirements and Bases

3.2.1 Mission Requirements

3.2.1.1 Direct Access

The IHF shall be designed to have direct rail and truck access to handle transportation casks for unloading into waste packages.

[MGR-RD [DIRS 177491], Section 3.2.14.B. This requirement is allocated to the surface nuclear handling facilities and BOP. Although this requirement also calls for overpacks, they will not be utilized in the IHF.]

3.2.1.2 Annual Receipt Rates

The IHF shall be designed to be capable of receiving sealed canisters and repackaging into waste packages for disposal at the rate of:

- A receipt rate of 4 rail shipments of 6 railcars (each shipment) with a single transportation cask on each railcar containing one naval SNF canister (24 annually) during full-scale, steady-state operations.
- A performance goal of 200 HLW canisters per year, not to interfere with the naval SNF canister receipt rate, received individually in LWT or OWT shipments, one canister per cask.

[CRD (DOE 2007 [DIRS 182960]), Sections 3.2.1B and 3.2.1C.1 Note 5 as flowed down through the MGR-RD [DIRS 177491], Sections 3.1.1.J, 3.1.1.K, and 3.1.2.J; IICD Volume 1 (DOE 2007 [DIRS 178792]) Assumption 5.2 specifies only rail will be used for Naval SNF while Section 9.4 also provides for naval receipt rate. Nuclear Facilities Receipt Rate Requirements Analysis Engineering Study (BSC 2007 [DIRS 181547]), Section 2.1, provides the specific annual receipt rates for the IHF. WASRD (DOE 2007 [DIRS 169992]), Section 4.2.3B provides for receiving sealed disposable naval canisters and Section 4.2.4 provides for receiving sealed canisters of solid HLW.

The IHF scope is to handle all naval SNF canister receipts. Although there is a ramp-up capability expected to occur through steady-state operations (after planned year 5), the IHF maximum capability will provide for the desired performance. The nominal annual receipt rate for naval SNF canisters is 15 per year by rail. The IHF shall be designed for this maximum receipt of 24 naval SNF canisters per year, which will accomplish the nominal.

The requirement for naval shipments of six casks is derived from the turnaround requirement of six naval casks, as required in the MGR-RD, Sections 3.1.2.J. In addition, MGR-RD, Sections 3.1.1.J states in the notes that the NNPP activities can prepare up to 24 naval SNF canisters annually for shipment to the MGR. Thus, four shipments per year of six casks equate to a maximum of 24 naval SNF transportation casks per year.

For DOE HLW, this capability will provide for the entire project first-year receipts of DOE HLW canisters. DOE HLW canisters from the Savannah River Site (SRS) are specified as an initial waste form for the IHF in BCP YMP-2006-043 (BSC 2006 [DIRS 177485]), Block 11, Description Page 1 and BSC Letter attachment Page 1 (3 of 32). Other short DOE HLW canister types are specified in following requirements (TMRB-2007-069 (BSC 2007 [DIRS 184140]) provide project direction to eliminate the long HLW canisters from the IHF to address lift height restrictions in Criterion 3.2.1.9.9. Long HLW canisters are handled in the CRCFs). The scope of the IHF does not include receiving and repackaging of DOE SNF canisters or commercial SNF. MGR-RD [DIRS 177491], Section 3.1.2.G, and 3.1.2.H provide specific direction that the naval canisters and the M-290 cask system will only be handled in the IHF (not CRCFs).]

3.2.1.3 Receive Transportation Casks

The IHF shall be designed with the capability to receive the following transportation casks; handle the naval and HLW canisters; and manage the associated site-generated waste stream:

- Naval M-290,
- General Atomics (GA)-4,
- GA-9,
- Nuclear Assurance Corporation (NAC)-LWT, and
- HLW canisters shall be received in casks certified by the NRC.

[MGR-RD [DIRS 177491], Section 3.1.2.G provides specific direction that the naval canisters and the M-290 transportation cask system will only be handled in the IHF (not the CRCFs). The remaining cask varieties are listed to assure that the IHF can accommodate truck shipments of HLW casks containing a single canister and rail shipments of naval casks containing a single canister. Eventual receipt capability for receiving DOE HLW in rail-based cask systems is not currently available to sufficiently include here. The other casks were identified in the Interface Control Document for the Transportation System and the Mined Geologic Disposal System Surface Repository Facilities and Systems for Mechanical and Envelope Interfaces Between the Surface Facility Operations and the Waste Acceptance and Transportation Office (CRWMS M&O 1998 [DIRS 101648]), Table 7.2 and assumptions in Section 5). Although the above referenced document was written for a previous design, its inputs are still the best available. Transportation System Requirements Document (TSRD) (DOE 2006 [DIRS 181305]), Section 3.2.1.1c, identifies the transportation casks to be utilized in accordance with 10 CFR 71 [DIRS 181967]. Although the IHF shall be designed to receive and handle the GA-4/9 and NAC LWT cask systems as surrogates for other necessary, but currently undeveloped transportation cask systems designed for canisters of HLW, this criteria should NOT be construed as requiring the IHF to receive or handle any uncanistered SNF for which those transportation casks systems are currently licensed. Dimensions of M-290 naval shipping cask are found on Figure C-3 of IICD Volume 1 (DOE 2007 [DIRS 178792]. CRD (DOE 2007 [DIRS 82960]), Section 3.2.1G provides for the new text for associated waste stream. Although the IICD Volume 2 (DOE 2007 [DIRS 176810]), Section 3.1.2 and Appendix B, Table B-1, identifies the GA-4/9 and NAC-LWT casks for bare fuel, they have also been discussed for HLW canisters with cask modifications.]

3.2.1.4 Naval Cask Turnaround Times

The IHF shall turn around (receive, unload, and return to service) a rail shipment of six naval casks in less than 42 days (six weeks). The IHF shall handle only one naval M-290 transportation cask (only one naval canister) at any one time.

[MGR-RD [DIRS 177491], Section 3.1.2.J and IICD Volume 1 (DOE 2007 [DIRS 178792]), Section 9.4. This transportation requirement does not apply to the CRCFs. The remaining facilities will not have responsibility for naval SNF canisters. The BOP would have responsibility for part of this requirement within the main receiving area. Although the requirement states "one at a time", one cask may be handled at a time in the preparation area, one canister can be transferred at a time, and a waste package may be welded. The processing may overlap such that the two canisters are in the IHF at the same time. PO&PR (BSC 2008 [DIRS 185008]), Section 2.1.3 refers to the IICD Volume 1 criterion.]

3.2.1.5 DHLW Cask Turnaround Time

The IHF shall be designed for a target transportation cask turnaround time for casks containing DHLW canisters from receipt from the national transportation system to return to the national transportation system in less than 7 days.

[PO&PR (BSC 2008 [DIRS 185008]), Section 2.1.3 applies to the other nuclear handling facilities. The naval casks turnaround time has been provided for via separate direction (Requirement 3.2.1.4).]

3.2.1.6 Maximum Naval Quantities

The IHF shall be designed to process a maximum of 400 naval SNF canisters. The breakout of the 400 canisters will be 310 that will be placed into naval long waste packages and 90 that will be placed into the naval short waste packages.

[CRD (DOE 2007 [DIRS 182960]), Section 3.2.1B Note 5 as flowed down through the MGR-RD [DIRS 177491], Section 3.1.2.I provides specific direction that the naval canisters and the M-290 transportation cask system will only be handled in the IHF (not CRCFs). The previously identified quantity of naval SNF canisters (300) has been revised by DOE in this latest direction. Since the repository plan is for all naval SNF to pass through the IHF, it is the only facility allocated in this requirement.]

3.2.1.7 Transportation Cask Return

The IHF shall ensure that, after removal of their radioactive material, transportation casks meet the following criteria before being returned to the CRWMS transportation element:

- Conform to its Certificate of Compliance,
- Fissile material and fissile material packaging exemption requirements in 10 CFR 71.15(a)-(f) [DIRS 181967] and the requirements of 10 CFR 71, *Packaging and Transportation of Radioactive Material,*
- 49 CFR 172, *Hazardous Materials Table, Special Provisions, Hazardous Materials Communications, Emergency Response Information, and Training Requirements* [DIRS 184241],
- 49 CFR 173, *Shippers--General Requirements for Shipments and Packagings* [DIRS 184242], for class 7 (radioactive) materials 173.401-173.477,
- Levels of non-fixed radioactive contamination on external surfaces shall be ALARA per 10 CFR 71.87(i). (Accessible external surfaces include the cask, impact limiters, personnel barrier, tie-down, transport frame, and transport vehicle),
- Accumulations of 15 grams or more of fissile material shall be removed from the transportation casks,
- The interior of unloaded transportation casks shall be visually inspected prior to closure and shall be free of debris and other foreign materials to the extent practical, comply with the appropriate transportation requirements, and
- Until modified by calculations or analyses, the combined gamma and neutron dose rate contribution from SNF measured at the basket top end plane over an open, unloaded transportation cask shall be no more than 35 mrem/hr without further evaluation of the fissile content limit of 49 CFR 173.453.

[MGR-RD [DIRS 177491], Section 3.1.2.A, IICD Volume 1 [DIRS 178792], Sections 9.2 and 9.2.1, 10 CFR 71.15 and PO&PR (BSC 2008 [DIRS 185008]), Sections 2.1.8, 2.1.9, and 2.1.10. The IHF will be returning transportation casks to the transportation element. The other nuclear facilities are also allocated in this requirement.]

3.2.1.7.1 Naval Cask Contamination

The IHF shall return naval transportation casks to the naval transportation system meeting naval surface contamination limits. The exterior and interior of the naval cask must not have removable contamination in excess of:

1. 1000 disintegrations per minute (dpm)/100 cm^2 for non-fixed beta- and gamma-emitting radionuclide contamination
2. 110 dpm/100 cm^2 for alpha-emitting radionuclides.

[IICD Volume 1 (DOE 2007 [DIRS 178792], Section 9.2.1.]

3.2.1.7.2 DOE Cask Contamination

The IHF shall return DOE transportation casks to the DOE transportation system meeting DOE surface contamination limits. The exterior and interior of the DOE cask must not have removable contamination in excess of:

1. 22,000 dpm/100 cm^2 for non-fixed beta and gamma-emitting radionuclide contamination
2. 2200 dpm/100 cm^2 for alpha-emitting radionuclides.

[IICD Volume 1 (DOE 2007 [DIRS 178792], Section 9.2.1.]

3.2.1.8 Remediation

The IHF shall be designed to include adequate space, tools, and radiation protection features (shielding, radiation monitors, HVAC confinement zones) to allow the repair and rework of canisters and waste packages or space to safely segregate the nonconforming item until a resolution can be developed and implemented.

- Damaged canisters shall be inspected to determine the severity of damage
- Nonconforming naval SFCs shall be segregated and staged in transportation casks
- Non-conforming HLW shall be reworked, as appropriate, to meet waste package loading requirements.
- Non-conforming HLW and SNF shall be staged in transportation casks.
- Once (or if) recovery from the off-normal condition has been completed, the naval SNF or HLW shall be returned to the processing operations.

[BCP YMP-2006-053 [DIRS 177483], Block 11, Page 6 of 1159. The bulleted items are provided from the PO&PR (BSC 2008 [DIRS 185008]), Sections 2.4.3, 2.4.4, 2.4.6, 2.4.7 (return to operations), and 2.4.8 (for the confinement part). Currently, IHF does not have space to safely segregate nonconforming items. A project change will have to be initiated to address the methodology as referenced in BCP YMP-2006-053.]

3.2.1.9 Waste Acceptance Requirements

3.2.1.9.1 Read Canister Labels

The IHF shall be designed to allow reading the naval and HLW canisters' legible, unique identifier that is permanently attached to the canister and to provide for recording information for the traceability to the permanent records of the canister and its contents.

[WASRD (DOE 2007 [DIRS 169992]) Sections 4.4.4 for naval SNF and 4.8.7 for HLW canisters. Naval SNF is only handled in the IHF. The mechanical handling system is also allocated in this requirement.]

3.2.1.9.2 Cask Hook Weight

The IHF shall be designed for the maximum hook weight for any lift of the loaded rail cask of 600,000 lbs.

[Naval transportation cask weight is the primary driver for this requirement, as specified in the IICD Volume 1 (DOE 2007 [DIRS 178792]), Section 7.2 and Figures B-4 and C-3. While preliminary weights of the M-290 cask are 295 tons, this requirement has been set at 300 tons (changed to lbs).]

3.2.1.9.3 Canister Lifting Fixture

The IHF shall conduct all vertical lifts and horizontal translations of naval SNF canisters while suspending the canisters from above via their lifting features.

[WASRD (DOE 2007 [DIRS 169992]), Section 4.4.2. Naval SNF is only handled in the IHF. The mechanical handling system is also allocated in this requirement.]

3.2.1.9.4 Naval Canister Thermal Limit

The IHF shall be designed for naval SNF canisters with a maximum thermal power of 11.8 kW ($4.03 \times 10^{+04}$ BTU/hr) at the time of acceptance into the repository. The IHF design and operational controls (such as limiting combustion sources, natural or artificial cooling, and proximity to other heat sources) shall ensure that naval spent nuclear fuel time at temperature conditions (to be determined) are not exceeded.

[WASRD (DOE 2007 [DIRS 169992]), Section 4.4.9. This requirement is allocated only to the IHF and the waste package design. IICD Volume 1 (DOE 2007 [DIRS 178792]), Section 10.3.2.2 provides the new criterion text on time at temperature conditions.]

3.2.1.9.5 Lifting HLW Canister

The IHF shall be designed to lift the standard vitrified HLW form borosilicate glass sealed inside an austenitic stainless steel canister from a concentric neck and lifting flange.

[WASRD (DOE 2007 [DIRS 169992]), Section 4.8.1.A describes the waste form and Section 4.8.5 provides for the lifting from the flange. IICD Volume 1 (DOE 2007 [DIRS 178792]), Section 13 also provides for the canister and concentric neck.]

3.2.1.9.6 HLW Canister Size

The IHF shall be designed to accommodate the HLW form that can stand upright without support on a flat horizontal surface and fit without forcing into a right-circular, cylindrical cavity 25 in (64 cm) diameter and 9.88 ft (3.01 m) length.

[WASRD (DOE 2007 [DIRS 169992]), Section 4.8.3. Although the canisters are nominally referred to as 10 ft and 15 ft long canisters, the actual dimensions are less than 10 ft and 15 ft, respectively. Although the WASRD Section 4.8.3 identifies a free-standing HLW canister height as 4.51 m, this is distinctly different than the nominal height of 4.57 m that is identified in Criterion 11.2.2.7. Note that the nominal height is actually larger than the allowable free-standing height. This dimension also happens to be different than the waste package interface cavity length documented in Criterion 11.2.2.7 citation to Figure C-25 of the IICD Volume 1 (DOE 2007 [DIRS 178792]). CBCN004 to Revision 001 provided this change. TMRB-2007-069 (BSC 2007 [DIRS 184140]) provide project direction to eliminate the long HLW canisters from the IHF to address lift height restrictions in Criterion 3.2.1.9.9. Long HLW canisters are handled in the CRCFs.]

3.2.1.9.7 HLW Canister Weight

The IHF shall be designed to receive and handle filled HLW canisters with a weight not to exceed 9,260 lb (4,200 kg).

[WASRD (DOE 2007 [DIRS 169992]), Section 4.8.4.]

3.2.1.9.8 HLW Canister Grapple

The IHF shall provide for canister grapples for HLW:

1. The Producer shall provide a grapple design suitable for use in loading or unloading a transportation cask with a standard 9.9 ft (3.0 m) HLW canister
2. The grapple, when attached to the hoist and engaged with the flange, shall be capable of moving the canistered waste form in the vertical direction
3. The grapple shall be capable of being remotely engaged with and remotely disengaged from the HLW canister flange
4. The grapple shall be capable of being engaged or disengaged while remaining within the projected diameter of the waste form canister
5. The grapple shall include safety features that prevent inadvertent release of a suspended canistered waste form.

[WASRD (DOE 2007 [DIRS 169992]), Section 4.8.5. TMRB-2007-069 (BSC 2007 [DIRS 184140]) provide project direction to eliminate the long HLW canisters from the IHF to address lift height restrictions in Criterion 3.2.1.9.9. Long HLW canisters are handled in the CRCFs.]

3.2.1.9.9 HLW Canister Drop Capability

The IHF shall not lift HLW canisters higher than 23 ft (7 m) above a flat, essentially unyielding surface without breaching or dispersing radionuclides. Lift height limits can be exceeded provided that energy-absorbing material is used to limit the impact energy to that of the drop height limit.

[WASRD (DOE 2007 [DIRS 169992]), Section 4.8.8.]

3.2.1.9.10 HLW Canister Thermal Limit

The IHF shall be designed to receive, transfer, and package canisters containing HLW with a total heat generation rate not to exceed 1,500 watts per canister at the year of shipment.

[WASRD (DOE 2007 [DIRS 169992]), Section 4.8.13. The requirement identifies a higher thermal output for these canisters than expected. "Request for Updated U.S. Department of Energy (DOE) Canister Thermal Output Limits in Support of Repository Design (EM-FMDP-06-006)" (Arenaz 2006 [DIRS 176668]) identified the expected thermal maximums.]

3.2.1.9.11 Not Used

3.2.1.9.12 Not Used

3.2.1.9.13 Not Used

3.2.1.9.14 Cask Sizes

The IHF shall be designed to receive casks having dimensions that do not exceed the following:

1. Rail casks for HLW
   a. With impact limiters attached: 340 in. long by 144 in. diameter
   b. With impact limiters removed but with trunnions attached: 234 in. long by 108 in. diameter (at the trunnions)
   c. If the trunnions are removable, the maximum diameter of the cask body: 100 in.
2. Truck casks for HLW
   a. With impact limiters attached: 245 in. long by 96 in. diameter
   b. With impact limiters removed: 200 in. long by 48 in. diameter (at the trunnions).
3. Rail Casks for naval M-290 Casks
   a. With impact limiters attached: 375 in. long by 128 in. diameter
   b. With impact limiters removed (Cask unloading length): 345 in. long
   c. Cask body: 128 in.
   d. Cask body without trunnions: 108 in.
   e. Shipping clearance envelope: AAR Plate F
   f. Crane hook weight: 590,000 lbs.

[IICD Volume 1 (DOE 2007 [DIRS 178792]), Section 7.2 and Figures B-4 and C-3.]

3.2.1.9.15 Rail Carrier Size

The IHF shall be designed to receive rail cars with dimensions less than or equal to those of Association of American Railroads (AAR) Plate F dimensions.

[IICD Volume 1 (DOE 2007 [DIRS 178792]) Section 7.3, and Table 1, and Appendix C Figure C-1. While the railcar must conform to the AAR Plate F dimensions (AAR 2004 [DIRS 169910])*, the IHF shall also comply with the largest diameter transportation cask for naval SNF, as specified in the IICD Section 7.6 and Appendix C Figure C-3.]*

3.2.1.9.16 Railroad Shipments

The IHF shall be designed to receive transportation casks containing SNF and HLW by directly receiving railroad shipments made under AAR standards. The transportation cask system, including impact limiters, tie-downs, and other related transportation equipment, shall be compatible with AAR Plate F dimensions. The combined cask and railcar carrier (gross railcar, cask, skid, and impact limiters) shall not exceed 65,750 lb gross weight per axle (e.g.,

263,000 lb gross weight for a 4 axle railcar; 394,500 lb for a 6-axle railcar; or 526,000 lb for an 8-axle railcar). The maximum combined cask and railcar carrier weight for shipments of naval SNF shall not exceed 789,000 lb.

[IICD Volume 1 (DOE 2007 [DIRS 178792]), Appendix C, Figure C-1. AAR 2004 [DIRS 169910] provides the specifics to define Plate F.]

3.2.1.9.17 Truck Dimensions

The IHF shall be designed to receive truck-based transportation casks containing HLW and empty waste packages on trucks and trailers with the following maximum characteristics:

- LWT with the combined legal-weight of the cask and truck carrier not exceeding a tandem axle gross weight of 34,000 lb and an overall gross weight of 80,000 lb.
- OWT with the combined weight of the truck/cask carrier being greater than 80,000 lbs gross vehicle weight, but not more than 90,000 to 105,000 lbs depending on the particular state transited.
- LWT or OWT flatbed trailers with a maximum width of 102 in.
- LWT or OWT flatbed trailers with a maximum length of 53 ft.

[Heavy-haul vehicles have been eliminated per IICD Volume 1 (DOE 2007 [DIRS 178792]), Section 5.1. Sections 7.2 and Figure B-1 provides information for LWT Transportation Systems that are bounded by rail. IICD Volume 2 (DOE 2007 [DIRS 176810]), Section 3.1.10 provides trailer dimensions for the LWT and OWT. A state may not limit the length of a semitrailer in a truck tractor-semitrailer combination to less than 48 ft or less than a grandfathered length. Although the grandfathered length limit is 53 ft for the State of Nevada, approximately half of the remaining states limit trailer length to 48 ft.]

3.2.1.9.18 Canister Leak Rate

The IHF shall receive HLW canisters that are sealed and considered leak tight with gas leak rates shall be less than 1×10^{-4} ref-cc/sec (6.10×10^{-4} in^3/sec).

[WASRD (DOE 2007 [DIRS 169992]), Section 4.8.6.]

3.2.1.9.19 Tamper-Indicating Seal Removal

The IHF shall be designed to remove any tamper indicating seals or locks from transportation casks and/or associated conveyances for strategic SNM.

[10 CFR 70.51 [DIRS 182681], 10 CFR 73.26 [DIRS 181969], and WASRD (DOE 2007 [DIRS 169992]), Sections 4.2.9.A and 4.2.9.B.]

3.2.1.10 Personnel Barriers

The IHF shall provide for removal or retraction of personnel barriers from around the cask while in the preparation areas.

[IICD Volume 1 (DOE 2007 [DIRS 178792]), Section 8.1. Personnel barriers are generally cages placed around the transportation system cask barrel and between the impact limiters to restrict personnel access to the cask surface. Personnel barriers will be included as part of the transportation system by the Regional Servicing Contractor or NNPP, as applicable. Personnel barrier details, such as fastener and lifting connections dimensions, for transportation systems to be used to ship the DOE Office of Environmental Management (DOE-EM) and naval SNF and DOE HLW are not currently available based on the stage of transportation system design or specification. Since personnel barrier details are not currently available, interface parameters are not included at this time. This criteria also meets PO&PR (BSC 2008 [DIRS 185008]), Section 2.2.7.]

3.2.1.11 Impact Limiters

The IHF shall provide for removal of impact limiters from the cask while in the preparation areas.

[IICD Volume 1 (DOE 2007 [DIRS 178792]), Section 8.2 Impact limiters are energy-absorbing cylindrical, conical, or domed structures affixed at the ends of the transportation system casks during shipment. They will be included as part of the transportation system by the Regional Servicing Contractor or NNPP, as applicable. Impact limiter details, such as fastener and lifting connections dimensions, for transportation systems to be used to ship DOE-EM and naval SNF and DOE HLW, are not currently available based on the stage of transportation system design or specification. Since impact limiter details are not currently available, interface parameters are not included at this time. This criteria also meets PO&PR (BSC 2008 [DIRS 185008]), Section 2.2.7.]

3.2.1.12 Hold-down Features

The IHF shall provide for removing the hold-down features while the cask is in the preparation areas.

[IICD Volume 1 (DOE 2007 [DIRS 178792]), Section 8.3. Hold-down features are used to restrain the movement of the cask on the transportation system skid. They may consist of straps circling the cask body that are bolted to the skid or pillow blocks or clamps that are bolted around the cask trunnions. Strap type hold-down features restrain only vertical movement of the transportation cask on the skid and require additional features to restrain horizontal movement. Pillow block and clamp type hold-down features restrain vertical and horizontal movement of the transportation cask on the skid. The hold-down features will be included as part of the transportation system by the Regional Servicing Contractor or NNPP, as applicable. The hold-down feature details, such as fastener and lifting connection dimensions, for transportation systems to be used to ship DOE-EM and naval SNF and DOE HLW, are not currently available based on the stage of transportation system design or specification. Since hold-down feature details are not currently available, interface parameters are not included at this time. This criteria also meets PO&PR (BSC 2008 [DIRS 185008]), Section 2.2.7.]

3.2.2 General Requirements

3.2.2.1 Emergency Management

The IHF shall provide for an operating room or area that shall be capable of conducting emergency management functions appropriate to the repository.

[RGA REG-CRW-RG-000455 (BSC 2007 [DIRS 184409]), Section 1.2 provided agreement that an area within the nuclear facility shall perform the appropriate functions of control rooms when activated for emergency management activities.]

3.2.2.2 Service Life

Design, construction, and maintenance of the IHF shall incorporate standard materials and practices appropriate for the specific building type facilitating a 50-year operational service life.

[This is a derived requirement from Criteria 2.2.2.7. BCP YMP-2006-053 [DIRS 177483], Block 11, Page 12 of 1159 specifies the duration of the preclosure period for the surface facilities as 50 years.]

3.2.2.3 Classification and Type

The IHF shall be designed as a Use and Occupancy Classification F-2 and Type of Construction 1B.

[This requirement was applied to the previous design concept. Since IHF is similar in function to the previous facilities, it should have the same classification and construction.]

3.2.2.4 Not Used

3.2.2.5 IICD Volume 1 Compliance

The IHF design shall comply with the agreements established under the IICD Volume 1 (DOE 2007 [DIRS 178792]) to ensure compatibility of naval SNF and HLW waste forms with repository surface facility interfaces, including canister handling interfaces, and compatibility between transportation equipment (e.g., transporters) and transported items (e.g., casks and canisters) with mechanical and envelope interfaces.

[CRD (DOE 2007 [DIRS 182960]), Section 3.2.1H, as flowed down through the MGR-RD [DIRS 177491], Section 3.1.2.B. This requirement is allocated to all facilities handling transportation system components and waste forms from DOE. Yucca Mountain Project Conceptual Design Report TDR-MGR-MD-000014, Rev. 05 [DIRS 176937] Section A3.1 lists naval SNF and HLW as the types of wastes processed in the IHF.]

3.2.2.5.1 Dimensions

Dimensions for transporters and transportation system casks and canisters are measured at a temperature of 70ºF ± 8ºF unless otherwise specified.

[IICD Volume 1 (DOE 2007 [DIRS 178792]), Assumption 5.1. Many of the IICD figures contain measurements that include tolerance stackups including for thermal expansion. Specific use of the temperature/tolerance stackups is only noted on the appropriate figures.]

3.2.2.5.2 Transportation Cask Handling

The IHF shall be designed to receive transportation system casks in a horizontal orientation, rotate the casks to a vertical orientation, (while still on their conveyance) and then handle the casks while in the vertical orientation. After removing the transportation cask from the transporter, the vertical-handling concept includes moving and lifting transportation casks, removing canisters from transportation casks, and loading canisters into waste packages.

[IICD Volume 1 (DOE 2007 [DIRS 178792]), Assumption 5.2a.]

3.2.2.5.3 No Skid Removal

The IHF shall be designed to handle rail or LWT transportation systems directly. Potential interfaces, including generic buildings and gates at the IHF, are provided in the IICD Volume 1 (DOE 2007 [DIRS 178792]). Truck casks will be delivered without handling skids.

[IICD Volume 1 (DOE 2007 [DIRS 178792]), Assumption 5.3 and Section 7.4. IICD Volume 2 (DOE 2007 [DIRS 176810]), Section 3.1.11.1 & 2 provides the statement that truck casks will not have skids.]

3.2.2.5.4 Disposable Canister Acceptance

The IHF shall be designed to handle only those DOE HLW and naval SNF transportation system casks and related canisters meeting CRWMS acceptance criteria.

[IICD Volume 1 (DOE 2007[DIRS 178792]), Assumption 5.15.]

3.2.2.5.5 No Handling Canister Contents

The IHF shall be designed to handle only the DOE HLW and naval SNF canisters, and not be designed to handle the canister contents.

[IICD Volume 1 (DOE 2007[DIRS 178792]), Assumption 5.6 and Section 10.3.1. The contents of disposable canisters will not require handling at the repository. Internal configuration details will not be provided for naval SNF.]

3.2.2.5.6 Canister Disposability Evaluations

The IHF shall be designed to handle naval SNF canisters that meet applicable disposability requirements with welded covers/lids.

[IICD Volume 1 (DOE 2007 [DIRS 178792]), Assumption 5.8 and WASRD (DOE 2007 [DIRS 169992]), Section 4.2.3.B. All disposable canisters received containing naval SNF will have been evaluated to demonstrate that they meet applicable disposability requirements for disposable canisters.]

3.2.2.5.7 Deleted

[The requirement for envelope interfaces is combined in Criterion 3.2.1.9.15.]

3.2.2.5.8 Cask Responsibilities

The IHF shall be designed to accommodate the DOE HLW and naval SNF casks as specified in Figures B-4 and C-3 of the IICD Volume 1 (DOE 2007 [DIRS 178792]), respectively.

[IICD Volume 1, Section 9.1. The cask is the foundation of the transportation system for carrying HLW and naval SNF to the repository. The memorandum of agreement (MOA) between OCRWM and DOE-EM (Roberson and Chu 2003 [DIRS 171933]) currently specifies that the HLW cask will be designed, NRC certified, and fabricated (with the rest of the transportation system) by OCRWM. The MOA between OCRWM and NNPP (Bowman and Itkin 2000 [DIRS 150730]) currently specifies that these responsibilities for the naval SNF cask lie with NNPP. DOE-EM developed a transportation system concept as potential inputs for future repository design activities. It has also been suggested that OCRWM may contract transportation services for DOE and HLW to a regional service contractor. IICD Figure B-4 now provides for an interface at the DOE-EM sites with the potential CRWMS transportation system cask and also provides some inputs for development of the IHF and Figure C-3 provides for the naval cask.]

3.2.2.5.9 Naval SNF Canister Integrity

The IHF design and operational controls (such as minimizing the probability and consequences of a drop and protection from external event sequences) shall ensure that any event sequence affecting the structural integrity of a naval SNF canister will meet the requirements of 10 CFR 63.111(b)(2) [DIRS 180319] identified in Criterion 2.2.3.1.6.

[IICD Volume 1 (DOE 2007 [DIRS 178792]), Section 10.3.2.3 provides this criterion text.]

3.2.2.5.10 Naval Canisters

The IHF shall be designed to handle and repackage both the long and short naval SNF canisters as specified in the IICD Volume 1 (DOE 2007 [DIRS 178792]), Section 10.3.1 and Figures C-18 and C-19, respectively.

[IICD Volume 1, Section 10.3.1 and Figures C-18 and C-19.]

3.2.2.5.11 Naval SNF Canister Handling

The IHF shall be designed to handle the naval SNF canister with the lifting fixtures shown on Figure C-17 on the IICD Volume 1 (DOE 2007 [DIRS 178792]), Section 10.3.1. The IHF shall be designed to lift and transfer the naval SNF canisters from the transportation cask directly to the waste package without any intermediary staging or storage.

[IICD,Volume 1, Section 10.3.1 and Figure C-17.]

3.2.2.5.12 Naval Canister Criticality Control

The IHF design and operational controls (such as nuclear isolation from other waste forms, moderator controls, and minimizing neutron reflection) shall ensure that the naval spent fuel canister criticality potential preclosure requirement identified in Section 4.4.A of the WASRD (DOE 2007 [DIRS 169992]) is met.

[IICD Volume 1 (DOE 2007 [DIRS 178792]) Section 10.3.2.1 provided this new criterion. IICD Volume 1 has an incorrect citation to the WASRD section - it should be the current WASRD Section 4.4.8 instead of 4.4.13. This criterion also partially satisfies PO&PR (BSC 2008 [DIRS 185008]), Section 2.6.2.]

3.2.2.5.13 HLW Canisters

The IHF shall be designed to receive all vitrified HLW in sealed disposable canisters designed specifically for vitrified HLW. The standard vitrified HLW form shall be sealed inside an austenitic stainless steel canister with a concentric neck and lifting flange. The IHF shall receive only the short HLW canisters represented by the canisters developed at the Defense Waste Processing Facility (DWPF) at SRS. See IICD Volume 1 (DOE 2007[DIRS 178792]), Figure~~s~~ C-20. All systems designed to handle HLW canisters, during normal operations, shall ensure that the maximum temperature of the vitrified glass does not exceed 400°C.

[IICD Volume 1, Section 13 and Figure~~s~~ C-20. Compliance with this requirement shall be shown to be achievable for any SSC that relies on the performance of the vitrified glass HLW. This includes activities from the storage of HLW canisters at the DOE-EM site through emplacement in the repository subsurface facilities. This requirement is only allocated to the IHF and the CRCFs that will handle HLW canisters. TMRB-2007-069 (BSC 2007 [DIRS 184140]) provide project direction to eliminate the long HLW canisters from the IHF to address lift height restrictions in Criterion 3.2.1.9.9. Long HLW canisters are handled in the CRCFs.]

3.2.2.5.14 DWPF HLW Canister Interface

The IHF shall be designed to receive and handle DWPF HLW canisters as specified in IICD Volume 1 (DOE 2007 [DIRS 178792]), Figure C-22.

[IICD Volume 1, Section 13.1. Figure C-22 illustrates the dimensional interfaces for the DWPF HLW canister and small canister staging rack.]

3.2.2.5.15 Deleted

[This criterion was deleted per TMRB-2007-069 (BSC 2007 [DIRS 184140]), which provided project direction to eliminate the long HLW canisters from the IHF to address lift height restrictions in Criterion 3.2.1.9.9. Long HLW canisters are handled in the CRCFs.]

3.2.2.5.16 INL HLW Canisters

The IHF shall be designed to receive and handle Idaho National Laboratory (INL) HLW canisters.

[IICD Volume 1 (DOE 2007 [DIRS 178792]), Section 13.3. The HLW canisters being considered for the INL have not been specified but are conceptually thought to be similar to the DWPF HLW canisters. However, INL may consider optimizing HLW shipping to the repository using both short and long canisters. The canister alphanumeric identifiers are expected to be of an ID0000 series.]

3.2.2.5.17 WVDP HLW Canisters

The IHF shall be designed to receive and handle WVDP HLW canisters as specified on IICD Volume 1 (DOE 2007 [DIRS 178792]), Figures C-29 and C-30.

[IICD Volume 1, Section 13.4 and Figures C-29 and C-30. The HLW from the West Valley Demonstration Project (WVDP) is contained in canisters similar in gross external dimensions to the DWPF HLW canisters. The fill neck and flange are wider and the canisters are loaded to a higher MTHM equivalent than the standard HLW glass form being poured into the DWPF HLW canisters. Although canister dimensional parameters are available, WVDP has not negotiated a contract with OCRWM for disposal of the waste at the repository. Detailed information about the canisters may be obtained from Characteristics of Potential Repository Wastes (DOE 1992 [DIRS 102588]). The canister alphanumeric identifiers shall be of a WV 000 series.]

3.2.2.6 Waste Package Preparation for Closure

The IHF shall prepare and perform waste package closure operations. This includes moving waste package from loading areas to closure areas, as necessary.

[This criterion partially satisfies the functional requirement PO&PR (BSC 2008 [DIRS 185008]), Sections 2.2.25.]

3.2.3 Safety and Protection Requirements

3.2.3.1 NSDB Requirements

3.2.3.1.1 Structural Integrity

The IHF structure shall be designed to maintain building structural integrity to protect ITS SSCs inside the building from external events and maintain building integrity to protect against building collapse onto waste containers (safety function).

- The mean frequency of building collapse due to:
  - -- extreme winds less than or equal to 120 mph shall not exceed 1.0×10^{-06}/yr.
  - -- volcanic ashfall less than or equal to 21 lb/ft^2 shall not exceed 1.0×10^{-06}/yr.
  - -- the spectrum of seismic events shall be less than or equal to 2.0×10^{-06} /yr.

[Preclosure NSDB (BSC 2008 [DIRS 184200]), Appendix B, Table B-1, Items IH.01, IH.02 and IH.04. However, TMRB-2007-011 (BSC 2007 [DIRS 182004]), TMRB Decision Proposal, Initial Handling Facility Seismic Design Basis, documented a project decision to design the facility to DBGM-2 to eliminate the need to obtain a source term for the naval SNF canister if the building structure collapsed onto the canister. It should be pointed out that the wind values provided here are different than the basic wind gust and tornado wind defined for ITS SSCs in Sections 6.1.3 and 6.1.4 of the PDC (BSC 2007 [DIRS 179641]).]

3.2.3.1.2 Heliport Location

The IHF structure shall be designed to maintain building structural integrity to protect ITS SSCs inside the building from external events (safety function).

- The IHF shall be located such that there is a distance of at least one-half mile between the IHF and the repository heliport.

[Preclosure NSDB (BSC 2008 [DIRS 184200]) Appendix B, Table B-1, Item IH.03.]

3.2.3.1.3 Moderator Control

There are no moderator control requirements necessary for the IHF.

[Preclosure NSDB (BSC 2008 [DIRS 184200]) Appendix B, Table B-1.]

3.2.3.1.4 TEV Rails Inside the IHF

The rails for the TEV inside the IHF shall protect against derailment of the TEV during loading of a waste package [into the TEV] (safety function).

- The mean frequency of TEV derailment due to the failure of the TEV rail system (at the loadout station) due to the spectrum of seismic events shall be less than or equal to 1.0×10^{-04} /yr.

[Preclosure NSDB (BSC 2008 [DIRS 184200]), Appendix B, Table B-1, Item IH.05.]

3.2.3.1.5 Shield Doors

The IHF shield doors (including anchorages) shall be designed to protect against direct exposure of personnel, to preclude collapse onto waste containers, and to protect against equipment shield door collapse onto a waste container (safety functions).

- Equipment shield doors shall have a mean probability of inadvertent opening of less than or equal to 2.0×10^{-06} per waste container handled.
- The mean frequency of collapse of equipment shield doors (including attachment of doors to wall and frame anchorages) due to the spectrum of seismic events shall be less than or equal to 6.0×10^{-06} /yr.
- Equipment shield doors shall be designed to preclude falling onto a waste container resulting from an impact from a conveyance.

[Preclosure NSDB (BSC 2008 [DIRS 184200]) Appendix B, Table B-1, Items IH.06 through 08. TMRB-2007-011 (BSC 2007 [DIRS 182004]), TMRB Decision Proposal, Initial Handling Facility Seismic Design Basis, documented a project decision to design the facility to DBGM-2 to eliminate the need to obtain a source term for the naval SNF canister if the building structure collapsed onto the canister.]

3.2.3.1.6 Port Slide Gates

The cask port slide gate and waste package port slide gate shall be designed to protect against dropping a canister due to a spurious closure of the slide gate, protect against direct exposure to personnel, and preclude canister breach due to a spurious closure of the slide gate onto the canister (safety functions).

- The mean probability of a canister drop resulting from a spurious closure of the port slide gate shall be less than or equal to 5.0×10^{-06} per transfer.
- The mean probability of inadvertent opening of a slide gate shall be less than or equal to 4.0×10^{-09} per canister transfer.
- Closure of the slide gate shall be incapable of breaching a canister.
- The waste package port slide gate shall be incapable of opening unless a waste package transfer trolley (with shield ring) is positioned below it.

[Preclosure NSDB (BSC 2008 [DIRS 184200]) Appendix B, Table B-1, Items IH.HTC.01 through 06. A criterion number in not assigned for the last bullet.]

3.2.3.1.7 Cask Preparation Platform

The IHF cask preparation platform shall be designed to protect against the collapse of the platform onto a waste container (safety function).

- The mean frequency of collapse of the cask preparation platform due to the spectrum of seismic events shall be less than or equal to 9.0×10^{-04} /yr.

[Preclosure NSDB (BSC 2008 [DIRS 184200]), Appendix B, Table B-1, Item IH.HMH.01.]

3.2.3.1.8 Waste Package Transfer Trolley Rails

In conjunction with the waste package transfer trolley, the IHF rails shall be designed to preclude protect against a tipover of a waste package on a waste package transfer trolley (WPTT), and protect against rocking of a waste package on a waste package transfer trolley which induces an impact into a wall (safety function).

- The mean frequency of tipover of the WPTT due to the spectrum of seismic events shall be less than or equal to 2.0×10^{-06}/yr.
- The mean frequency of the rocking impact of the WPTT into a wall due to the spectrum of seismic events shall be less than or equal to 2.0×10^{-05}/yr.

[Preclosure NSDB (BSC 2008 [DIRS 184200]), Appendix B, Table B-1, Items H.IH.HL.05 and H.IH.HL.06. Also see Chapter 13. Criterion that do not have a facility component (such as trolley speed) are not included here.]

3.2.3.1.9 Non-ITS SSCs Interactions with ITS-SSCs

The IHF shall be designed such that interactions between non-ITS SSCs and ITS SSCs that upon failure could prevent safety functions from being performed:

- have a probability of failure of less than 1×10^{-04} over the preclosure period (as determined by PCSA),
- will not damage the ITS component if not screened out, or
- damage to the ITS SSC does not result in a doses in excess of the 10 CFR 63.111 [DIRS 180319] performance standard (as determined by PCSA).

The IHF shall be designed such that interactions between non-ITS SSCs and ITS SSCs shall include the dynamic loads and displacements produced by both sets of SSCs up to the first anchor point beyond the interaction. Additionally, either:

- The collapse of the non-ITS SSC shall not cause it to strike an ITS SSC,
- The collapse of the non-ITS shall not impair the integrity of the ITS SSC, or
- The non-ITS SSC shall be analyzed and designed to the same seismic DBGM as the ITS SSCs subjected to the potential unacceptable interaction.

Acceptable methods of isolating each non-ITS SSC with an adverse interaction include constraints, barriers, or relocation of the non-ITS SSC.

[The wording paraphrases the wording in NUREG-0800, Section 3.7.2., subsection II.8 (NRC 1989 [DIRS 165111]). The discussion of isolation and anchor point boundary for the design is from NUREG-0800, Section 3.7.3., subsection II.8 (NRC 1989 [DIRS 165112]). Although the NUREG is not directly applicable to the repository as it is not a reactor plant, the repository does have both non-ITS and ITS SSCs that should have the same design considerations of the interactions. The specific criterion is contained in the PDC (BSC 2007 [DIRS 179641]), Section 6.1.10.2., for any non-ITS/ITS interactions. This requirement is commonly called the two-over-one requirement.]

3.2.3.2 Fire Protection Requirements

3.2.3.2.1 Passive Fire Protection Features

The IHF shall be provided with passive fire protection in form of fire rated barriers, as determined in the Fire Hazard Analysis (FHA).

[Initial Handling Facility Fire Hazard Analysis (BSC 2008 [DIRS 185027]), Section 7.1.3.]

3.2.3.2.2 Automatic Fire Protection Features

The IHF shall be provided with automatic fire suppression and automatic fire alarm and detection systems throughout the facility, as determined in the FHA.

[Initial Handling Facility Fire Hazard Analysis (BSC 2008 [DIRS 185027]), Section 7.1.1.]

3.2.3.2.3 Manual Fire Protection Features

The IHF shall be provided throughout with portable fire extinguishers, Class III Standpipe systems, and manual fire alarm pull stations, as determined in the FHA.

[Initial Handling Facility Fire Hazard Analysis (BSC 2008 [DIRS 185027]), Section 7.1.2. Additionally, Fire Protection for Operating Nuclear Power Plants, Regulatory Guide 1.189 [DIRS 155040], Section 3.4.1 provides for "Interior manual hose installation should be able to reach any location that contains, or could present a fire exposure hazard to, equipment important to safety with at least one effective hose stream" and specifies Class III standpipes to accomplish that.]

3.2.3.2.4 Fire Resistant Materials

The IHF shall be designed such that: electrical cabling and other exposed materials meet flame spread and other related requirements; and equipment installed within the facility utilize non-combustible lubricants and hydraulic fluids to the maximum extent practicable, as determined in the FHA. Vehicles entering the facility shall be limited to 100 gallons of diesel fuel per vehicle.

[Initial Handling Facility Fire Hazard Analysis (BSC 2008 [DIRS 185027]), Section 7.1.3.]

3.2.3.2.5 Life Safety Provisions

The IHF shall be designed to meet life safety provisions such as means of egress, emergency lighting, and other features, as determined in the FHA.

[Initial Handling Facility Fire Hazard Analysis (BSC 2008 [DIRS 185027]), Section 7.1.4.]

3.2.3.2.6 Occupant Notification

Local fire alarm occupant notification shall be provided throughout the entire facility originating the alarm. A fire zone alarm panel or graphic zone alarm panel shall be provided at the main entrance to major facilities. A manual fire notification method, such as manual fire alarm initiation devices, shall be provided at all normally occupied facilities.

[DOE O 420.1A [DIRS 159450], Contractor Requirement 4.2.2.6. The alarm panel transmits trouble, supervisory, and alarm signals to the Central Control Center and Fire, Rescue and Medical Facility for appropriate response.]

3.2.3.3 Security Requirements

3.2.3.3.1 Physical Protection

Appropriate delays at doors and other access points, defensive positions, and mechanical controls on material movement in the canister handling area shall be included in the design.

[10 CFR 73 [DIRS 181969]. Appropriate safeguard and security measures are implemented to protect the IHF and the special nuclear materials (SNM) that are handled in the IHF. This requirement is applicable to the nuclear handling facilities, Subsurface Facility, BOP, and S&S system.]

3.2.3.3.2 Access Controls

The IHF shall be designed to have access controls to allow access to only those individuals who are authorized to enter the facility.

[10 CFR 73.51(b)(2)(ii) [DIRS 181969]. DOE M 470.4-2 [DIRS 178562] Chapter VIII.2 specifies access controls for areas including for those areas in the IHF. This requirement is applicable to the nuclear handling facilities, Subsurface Facility, BOP, and S&S system.]

3.2.3.3.3 Interior Intrusion Detection

The IHF shall be designed to have interior intrusion detection to detect and assess unauthorized penetration or activities within the facility and/or provide remote visual observations to ensure breaches in the security area boundaries for those S&S interests under intrusion detection system (IDS) protection are detected and alarms are annunciated.

[10 CFR 73.51(b)(2)(iii) and (d)(3) [DIRS 181969] provides for the base requirement and DOE M 470.4-2 [DIRS 178562], Chapter VII.2.b provides additional text. This requirement is applicable to the nuclear handling facilities, Subsurface Facility, BOP, and S&S system.]

3.2.3.3.4 Loss of Control

The IHF physical protection system shall be designed to protect against loss of control of the facility that could be sufficient to cause a radiation exposure exceeding the dose as described in 10 CFR 72.106 (b) [DIRS 181968].

[10 CFR 73.51(b)(3) [DIRS 181969] This requirement is applicable to the nuclear handling facilities, Subsurface Facility, BOP, and S&S system.]

3.2.3.3.5 Physical Barriers

The IHF building walls shall provide the second permanent physical barrier for the storage of SNF and HLW offering substantial penetration resistance to control, deny, impede, or delay unauthorized access.

[10 CFR 73.51(d)(1) [DIRS 181969] provides for the base requirement and DOE M 470.4-2 [DIRS 178562], Chapter IX.4 through IX.8 adds specific criteria. This requirement is applicable to the nuclear handling facilities, Subsurface Facility, BOP, and S&S system.]

3.2.3.3.6 Illumination

The IHF shall be designed to provide for illumination, sufficient to permit adequate assessment of unauthorized penetrations of or activities within the facility and surrounding area.

[10 CFR 73.51(d)(2) [DIRS 181969] This requirement is applicable to the nuclear handling facilities, Subsurface Facility, BOP, and S&S system.]

3.2.3.3.7 Secure Storage

The IHF shall be designed to, if required, store S&S interests requiring secure storage in vaults, vault-type rooms, vault-type-room complexes, and/or General Services Administration (GSA) approved security containers.

[DOE M 470.4-2 [DIRS 178562], Chapter XI.1.a. This requirement is applicable to the nuclear handling facilities, Subsurface Facility, BOP, and S&S system.]

3.2.4 Miscellaneous Requirements

3.2.4.1 Surveys and Inspections

The IHF shall be designed to provide space and equipment necessary to remotely perform radiological surveys of waste packages and transportation cask, and to perform security inspections of the transportation cask subsystems, surveys of sealed waste packages to identify physical damage to the corrosion barrier and to ensure they are suitable for emplacement.

[PO&PR (BSC 2008 [DIRS 185008]), Sections 2.2.24, 2.2.29, 2.2.30. and 2.2.31.]

3.2.4.2 Survey and Decontamination

The IHF shall be designed to support limited survey and decontamination capability for transportation casks and waste packages.

[10 CFR 20.1501(a) [DIRS 181962] requires survey and monitoring. No significant levels of contamination are expected in the IHF. However, in the event that transportation casks or waste packages are surveyed and found to have surface contamination, decontamination shall be performed by the limited capability afforded in the facility. In conjunction with the Radiation/Radiological Monitoring System (See Chapter 28), the IHF shall provide a means to perform radiological analysis on samples (smears, air, process, etc) where equipment and material must be surveyed to show compliance with applicable limits prior to release from restricted areas. The process must be capable of detecting radioactive contamination levels below applicable release limits.]

3.2.4.3 Segregation of Liquids

The IHF shall be designed to provide for the collection of liquids that may intrude into areas where contamination may be present as low-level radioactive waste (LLW).

[Although the Scenario SI 628 in the Preliminary Hazards Analysis for License Application Study (BSC 2004 [DIRS 167313]) was written for the previous facilities, they would also apply to the current facilities. This reference will suffice until the analysis is revised. The development of drainage, piping, and other low level radioactive collection design details will be developed during detailed design.]

3.2.4.4 Navy and DOE HLW Cask Venting

The IHF is not required to provide cask cavity sampling capability. The IHF will be capable of venting the transportation cask cavity to the off-gas (HVAC) system prior to cask lid removal.

[The IHF will only receive and process undamaged navy and DOE casks and will not require sampling prior to processing. Damaged navy casks will not be remediated by the repository. DOE HLW is vitrified prior to transportation and should not need sampling. Recommendations to remediate DOE HLW will be addressed after they are received from the DOE. For ALARA considerations, it is prudent to vent the cavity gas to an off-gas collection system (i.e., HVAC). Engineering Study Transportation Cask Gas Sampling Requirements Analysis (BSC 2007 [DIRS 181530]) provided specific text for this requirement. Although the study only requires gas-sampling in the WHF, project direction is to have the capability in each nuclear facility (Slovic 2007 [DIRS 184156]).]

3.3 Conformance Verification

Table 3-1. IHF Conformance Verification

Criterion		Preliminary Verification Method					
Number	Description	N/A	Analysis	Exam	Demo	Review	Test
3.2.1.1	Direct Access					X	
3.2.1.2	Annual Receipt Rates		X				
3.2.1.3	Receive Transportation Casks					X	
3.2.1.4	Naval Cask Turnaround Times		X				
3.2.1.5	DHLW Cask Turnaround Time		X				
3.2.1.6	Maximum Naval Quantities					X	
3.2.1.7	Transportation Cask Return					X	
3.2.1.7.1	Naval Cask Contamination					X	
3.2.1.7.2	DOE Cask Contamination					X	
3.2.1.8	Remediation					X	
3.2.1.9.1	Read Canister Labels					X	
3.2.1.9.2	Cask Hook Weight						X
3.2.1.9.3	Canister Lifting Fixture					X	
3.2.1.9.4	Naval Canister Thermal Limit		X				
3.2.1.9.5	Lifting HLW Canister						X
3.2.1.9.6	HLW Canister Size					X	
3.2.1.9.7	HLW Canister Weight					X	
3.2.1.9.8	HLW Canister Grapple					X	
3.2.1.9.9	HLW Canister Drop Capability					X	
3.2.1.9.10	HLW Canister Thermal Limit			X			
3.2.1.9.11	Not Used	--	--	--	--	--	--
3.2.1.9.12	Not Used	--	--	--	--	--	--
3.2.1.9.13	Not Used	--	--	--	--	--	--
3.2.1.9.14	Cask Sizes					X	
3.2.1.9.15	Rail Carrier Size					X	
3.2.1.9.16	Railroad Shipments					X	
3.2.1.9.17	Truck Dimensions					X	
3.2.1.9.18	Canister Leak Rate					X	
3.2.1.9.19	Tamper-Indicating Seal Removal					X	
3.2.1.10	Personnel Barriers					X	
3.2.1.11	Impact Limiters					X	
3.2.1.12	Hold-down Features					X	
3.2.2.1	Emergency Management					X	
3.2.2.2	Service Life					X	
3.2.2.3	Classification and Type					X	
3.2.2.4	Not Used	--	--	--	--	--	--
3.2.2.5	IICD Volume 1 Compliance					X	
3.2.2.5.1	Dimensions					X	
3.2.2.5.2	Transportation Cask Handling					X	
3.2.2.5.3	No Skid Removal					X	
3.2.2.5.4	Disposable Canister Acceptance					X	
3.2.2.5.5	No Handling Canister Contents					X	
3.2.2.5.6	Canister Disposability Evaluations					X	
3.2.2.5.7	Deleted	--	--	--	--	--	--
3.2.2.5.8	Cask Responsibilities					X	

Table 3-1. IHF Conformance Verification (Cont'd)

3.2.2.5.9	Naval SNF Canister Integrity					X	
3.2.2.5.10	Naval Canisters					X	
3.2.2.5.11	Naval SNF Canister Handling					X	
3.2.2.5.12	Naval Canister Criticality Control					X	
3.2.2.5.13	HLW Canisters	X					
3.2.2.5.14	DWPF HLW Canister Interface					X	
3.2.2.5.15	Deleted	--	--	--	--	--	--
3.2.2.5.16	INL HLW Canisters					X	
3.2.2.5.17	WVDP HLW Canisters					X	
3.2.2.6	Waste Package Preparation for Closure					X	
3.2.3.1.1	Structural Integrity					X	
3.2.3.1.2	Heliport Location					X	
3.2.3.1.3	Moderator Controls					X	
3.2.3.1.4	TEV Rails inside IHF					X	
3.2.3.1.5	Shield and Confinement Doors					X	
3.2.3.1.6	Port Slide Gates					X	
3.2.3.1.7	Cask Preparation Platform					X	
3.2.3.1.8	Waste Package Transfer Trolley Rails		X				
3.2.3.1.9	Non-ITS SSCs Interactions with ITS SSCs		X				
3.2.3.2.1	Passive Fire Protection Features					X	
3.2.3.2.2	Automatic Fire Protection Features					X	
3.2.3.2.3	Manual Fire Protection Features					X	
3.2.3.2.4	Fire Resistant Materials					X	
3.2.3.2.5	Life Safety Provisions					X	
3.2.3.2.6	Occupant Notification					X	
3.2.3.3.1	Physical Protection					X	
3.2.3.3.2	Access Controls					X	
3.2.3.3.3	Interior Intrusion Detection					X	
3.2.3.3.4	Loss of Control					X	
3.2.3.3.5	Physical Barriers					X	
3.2.3.3.6	Illumination					X	
3.2.3.3.7	Secure Storage					X	
3.2.4.1	Surveys and Inspections					X	
3.2.4.2	Survey and Decontamination					X	
3.2.4.3	Segregation of Liquids					X	
3.2.4.4	Navy and DOE HLW Cask Venting					X	

4 Canister Receipt and Closure Facilities

4.1 Overview

4.1.1 Introduction

The CRCFs provide space to receive SNF and HLW in disposable canisters and transfer to and weld waste packages for emplacement. The facilities receive commercial SNF in TAD canisters, DOE SNF in standardized canisters and MCOs, and HLW canisters contained within transportation casks. The CRCFs' mechanical handling systems will handle and open the casks, remove and transfer the canisters to waste packages, and close and seal the waste packages.

The CRCFs provide for limited in-facility staging for canisters to accommodate variations in receipts of DOE SNF and HLW canisters before the DOE waste packages are loaded. The CRCFs provide for limited in-facility staging of TADs.

There are possibly three CRCFs needed to accommodate annual receipts at the repository. CRCF-1 is part of the IOC; the other two CRCFs will be constructed in the future as dictated by receipt requirements and funding constraints.

In addition, the CRCFs provides space and layout for industrial and radiological safety systems; limited operational control and monitoring, safeguards and security systems, fire protection systems, ventilation systems, and utility systems. The CRCFs also provides the required space and layout for maintenance and administrative support, if required.

4.1.2 System Classification

The CRCFs have been classified as ITS because there are Category 2 events sequences that could occur in the CRCFs and features of the facility to prevent, reduce the frequency, or mitigate event sequences. The structures are ITS because they maintain the waste form container integrity, building confinement integrity, and personnel shielding. Rails for the TEV (inside the building), rails for the waste pakcage transfer trolley, shield doors (including anchorages), confinement doors, DOE canister slide gates, cask port slide gates, TAD slide gates, waste package port slide gates, and cask preparation platform are ITS.

Rails for the commercial railcars (inside the buildings), ALARA shielding features, CRCF loadout platforms, and waste package transfer carriage docking stations are non-ITS. The CRCFs do not include SSCs that are ITWI.

[Preclosure NSDB (BSC 2008 [DIRS 184200]), Appendix A, Table A-1 specifically provides the classification of the system SSCs and Appendix D, Table D-1 provides the functions.]

4.2 Functional and Performance Requirements and Bases

4.2.1 Mission Requirements

4.2.1.1 Direct Access

The CRCFs shall be designed to have direct rail access to handle transportation casks; direct truck access for transportation casks, DOE SNF and HLW canisters (if required), delivery of empty waste packages and other support equipment and supplies; and direct site transporter access for the delivery and removal of aging overpacks (AOs).

[TMRB-2007-042 (BSC 2007 [DIRS 182479]), TMRB Decision Proposal Use of Vertical Shielded Transfer Cask (STC). CBCN005 to Revision 001 provided for eliminating the STC. MGR-RD [DIRS 177491], Section 3.2.14.B provides for receiving transportation casks. The other components to be received were derived from the initial cask receipts.]

4.2.1.2 Commercial Annual Receipt Rates

CRCF-1, CRCF-2 and CRCF-3 shall each be designed to be capable of receiving commercial SNF in TAD canisters and in DPCs [dual-purpose canister] by rail in accordance with the following:

- 450 MTHM/year in TAD canisters with thermal outputs of less than 11.8kW/canister for direct placement in waste packages,
- 200 MTHM/year in TAD canisters with thermal outputs of greater than 11.8kW/canister for transfer to the Aging Facility, and
- 50 MTHM/year in DPCs to transfer to the Aging Facility.

[Repository annual receipt rates were specified in the CRD (DOE 2007 [DIRS 182960]), Sections 3.2.1B and 3.2.1C and flowed down through the MGR-RD [DIRS 177491], Section 3.1.1.J and 3.1.1.K. This information also meets IICD Volume 2 (DOE 2007 [DIRS 176810]), Section 3.1.2.1 on the CRCFs receiving TAD canisters.

Note: The ramp-up period and the allocations between facilities required a more detailed examination. Since each CRCF is the same size and is equipped with the same mechanical handling equipment, each CRCF shall be capable of receiving equal amounts of commercial SNF. The evaluation and selection of these receipt rates are documented in the Nuclear Facilities Receipt Rate Requirements Analysis Engineering Study, (BSC 2007 [DIRS 181547]), Section 2.1. Thermal output values for DPCs are not necessary as the number of assemblies differs from the TAD canister contents and these DPCs are being routed to the Aging Facility and are not being placed in waste packages within the CRCFs.]

4.2.1.3 Initial Waste Forms

The CRCF shall be designed to receive and repackage the following initial waste forms:

- HLW in the form of borosilicate glass that is delivered to the repository in HLW canisters
- CSNF received in TAD canisters
- CSNF received in DPCs (to be placed in aging overpack)
- DOE SNF delivered to the repository in standardized canisters and in MCOs.

[BCP YMP-2006-053 [DIRS 177483], Block 11, Page 5, 7, and 8 of 1159. Although mixed-oxide (MOX) fuel and DOE HLW are expected to be received at the repository, they are not expected to be received in the IHF or CRCF-1. It was apparently in error that the original requirement did not mention the standardized canisters. Since HLW canisters are included, the DOE SNF standardized canisters are necessary to co-dispose HLW and DOE SNF. MGR-RD [DIRS 177491], Sections 3.1.2.G and 3.1.2.H provides specific direction that the naval canisters and the M-290 cask system will only be handled in the IHF (not CRCFs). This also satisfies the WASRD (DOE 2007 [DIRS 169992]), Section 4.2.4 for solid form DOE SNF and HLW. Thermal output values for DPCs are not necessary as the number of assemblies differs from the TAD canister contents and these DPCs are being routed to the Aging Facility and are not being placed in waste packages within the CRCFs. The Nuclear Facilities Receipt Rate Requirements Analysis Engineering Study,(BSC 2007 [DIRS 181547])] identifies the receipt of DPCs.]

4.2.1.3.1 MCO Waste Forms

Although not a requirement on the repository, the MCO contents are expected to include (non-exclusively) the following DOE SNF as waste forms:

- Shippingport PWR-Core 2 SNF
- N-Reactor SNF

[IICD Volume 1 (DOE 2007 [DIRS 178792], Section 5.12 provides for the Shippingport SNF. N-Reactor SNF is not specifically listed in this version of the IICD, but is already known to be loaded into MCOs as documented in previous versions.]

4.2.1.3.2 DOE Standardized SNF Canister Waste Forms

Although not a requirement on the repository, the DOE Standardized SNF Canister are expected to include (non-exclusively) the following DOE SNF as waste forms:

- Fort Saint Vrain reactor SNF
- TMI-2 debris canisters
- Non-standard, consolidated commercial SNF assemblies owned by DOE
- INL Materials and Fuels Complex, sodium-bonded DOE SNF from an electrometallurgic treatment process (not currently in the repository baseline)

[IICD Volume 1 (DOE 2007 [DIRS 178792], Sections 5.9, 5.10, 5.13 and 5.14.]

4.2.1.4 Annual Receipt Rates for DOE SNF and HLW

CRCF-1, CRCF-2 and CRCF-3 shall each be designed to be capable of receiving by rail, while receiving the waste streams identified in Section 4.2.1.2, the following waste stream:

- 63 DOE SNF canisters/year and
- 315 HLW canisters/year

[Although CRD (DOE 2007 [DIRS 182960]), Section 3.2.1B and MGR-RD [DIRS 177491], Section 3.1.1.J dictate receipt rate requirements for the repository, the ramp-up period and the allocations between facilities required a more detailed examination. Since each CRCF is the same size and is equipped with the same mechanical handling equipment, each CRCF shall be capable of receiving equal amounts of these DOE wastes. The evaluation and selection of these values are documented in the Nuclear Facilities Receipt Rate Requirements Analysis Engineering Study, (BSC 2007 [DIRS 181547]), Section 2.1.]

4.2.1.5 Receive Transportation Casks

The CRCF shall be designed with the capability to receive the following transportation cask (non-exclusively); handle the canisters; and manage the associated site-generated waste stream:

- GA-4 (provide cask handling capability only)
- GA-9 (provide cask handling capability only)
- NAC-LWT (provide cask handling capability only)
- NAC-STC (storage, transportation cask)
- NAC-UMS
- MP-187 Multi-Purpose Cask (provide handling capability)
- MP-197 Multi-Purpose Cask (provide handling capability)
- HI-STAR 100
- TranStor TS-125
- TAD Transportation Cask
- DOE SNF and HLW shall be received in transportation casks certified by the NRC

[TSRD (DOE 2006 [DIRS 181305]), Section 3.2.1.1c, identifies the transportation casks to be utilized in accordance with 10 CFR 71 [DIRS 181967]. Certification requirements were specified in MGR-RD [DIRS 177491], Section 3.1.2.C, and CRD (DOE 2007 [DIRS 182960]), Sections 3.2.1I and 3.2.1G (for the additional text for the waste stream). The MP-197 cask was added to the list because it was developed and submitted to the NRC after DOE provided the initial TSRD list. The MP-187 handles one waste form and the MP-197 handles the other. The MP-197 is expected to have similar stature in future revisions of the TSRD. The MP-187 and MP-197 casks are expected to be received at the CRCF as an off-normal event only. Although the TranStor TS-125 cask system (from BNFL Fuel Solutions, previously TranStor) may not be licensed by the NRC, it is included here as a surrogate for potential future cask designs. Although IICD Volume 2 (DOE 2007 [DIRS 176810), Section 3.1.2 and Appendix B, Table B-1, also identifies casks TN-68 and TN-32, these are bare-fuel casks and not applicable to the CRCFs.

Note: The GA-4, GA-9, and NAC-LWT are listed as cask types for the CRCFs, as they are similar in size and configuration to a truck-based DOE HLW or SNF transportation cask. Although the CRCFs shall be designed to receive and handle the GA-4/9 and NAC LWT cask systems as surrogates for other necessary, but currently undeveloped transportation cask systems designed for canisters of HLW and DOE SNF, this criteria should not be construed as requiring the CRCFs to receive or handle any uncanistered SNF for which those transportation casks systems are currently licensed. The option to accept DOE HLW and SNF is retained for design flexibility, such as if rail is not yet available to the repository. In addition, the transportation cask used for TAD canisters has not been finalized. Similar rail-based transportation casks used for DPCs are listed in lieu of a specific PWR or BWR TAD canister transportation cask.]

4.2.1.6 Transportation Cask Return to Service

The CRCFs shall ensure that, after removal of their radioactive material, transportation casks meet the following criteria before being returned to the CRWMS transportation element:

- Conform to its Certificate of Compliance,
- Fissile material and fissile material packaging exemption requirements in 10 CFR 71.15(a)-(f) [DIRS

181967] and the requirements of 10 CFR 71, *Packaging and Transportation of Radioactive Material*,
- 49 CFR 172, *Hazardous Materials Table, Special Provisions, Hazardous Materials Communications, Emergency Response Information, and Training Requirements* [DIRS 184241],
- 49 CFR 173, *Shippers--General Requirements for Shipments and Packagings* [DIRS 184242], for class 7 (radioactive) materials 173.401-173.477,
- Levels of non-fixed radioactive contamination on external surfaces shall be ALARA per 10 CFR 71.87(i). (Accessible external surfaces include the cask, impact limiters, personnel barrier, tie-down, transport frame, and transport vehicle.),
- Accumulations of 15 grams or more of fissile material shall be removed from the transportation casks,
- The interior of unloaded transportation casks shall be visually inspected prior to closure shall befree of debris and other foreign materials to the extent practical, comply with the appropriate transportation requirements, and
- Until modified by calculations or analyses, the combined gamma and neutron dose rate contribution from SNF measured at the basket top end plane over an open, unloaded transportation cask shall be no more than 35 mrem/hr without further evaluation of the fissile content limit of 49 CFR 173.453.

[MGR-RD [DIRS 177491], Section 3.1.2.A; IICD Volume 1 [DIRS 178792], Sections 9.2 and 9.2.1; 10 CFR 71.15; PO&PR (BSC 2008 [DIRS 185008]), Sections 2.1.8, 2.1.9, and 2.1.10; and IICD Volume 2 (DOE 2007 [DIRS 176810]), Section 3.1.15. The CRCFs will be returning transportation casks to the transportation element. The other nuclear facilities are also allocated in this requirement. Even though there is a requirement that MGR will ensure that there is less than 100 grams of spent fuel material and no extraneous material (other than fuel assembly crud) remaining in the cask interior, removing accumulation of 15 grams or more of fissile material is the more conservative criterion.]

4.2.1.6.1 DOE Cask Contamination

The CRCFs shall return DOE transportation casks to the DOE transportation system meeting DOE surface contamination limits. The exterior and interior of the DOE cask must not have removable contamination in excess of:

- 22,000 dpm/100 cm^2 for non-fixed beta- and gamma-emitting radionuclide contamination
- 2200 dpm/100 cm^2 for alpha-emitting radionuclides.

[IICD Volume 1 (DOE 2007 [DIRS 178792], Section 9.2.1.]

4.2.1.7 Cask Turnaround Time

The CRCFs shall be designed for a target transportation cask turnaround time from receipt from the national transportation system to return to the national transportation system less than 7 days.

[PO&PR (BSC 2008 [DIRS 185008]), Section 2.1.3. This would also apply to the other nuclear handling facilities.]

4.2.1.8 TAD Canister

The CRCFs shall be designed to receive and handle the TAD transportation cask systems and shall handle the TAD canisters for transfer, as provided by the *Transportation, Aging, and Disposal Canister System Performance Specification (DOE 2007 [DIRS 181403])* and accommodate the TAD canisters.

[MGR-RD [DIRS 177491], Section 3.1.2.F. Although this requirement previously compared the TAD canister to another canister Sections 3.1.2.G and 3.1.2.H, provided specific direction that the naval canisters and the M-290 cask system will only be handled in the IHF (not CRCFs). The allocation to the CRCFs was provided in Criterion 2.2.1.11.]

4.2.1.9 Waste Acceptance Requirements

4.2.1.9.1 Commercial SNF Under Contract

The CRCFs shall be designed to receive and package TAD canisters of commercial SNF that meet the requirements specified in 10 CFR 961 [DIRS 182678], as modified by individual purchaser contracts.

[WASRD (DOE 2007 [DIRS 169992]), Section 4.1. Although the WASRD provides criteria for waste generators, it also places criteria on the repository to accept what meets the generator criteria. This statement will not be repeated for other WASRD requirements. Commercial SNF may include both uranium oxide (UO2) SNF and

MOX SNF from commercial power reactors and SNF from privately owned commercial research reactors. Most commercial SNF will be loaded into TAD canisters for shipment according to the *Transportation, Aging and Disposal Canister System Performance Specification (DOE 2007 [DIRS 181403]).]*

4.2.1.9.2 DOE Generated SNF Disposable Canisters

The CRCFs shall be designed to receive DOE SNF, foreign research reactor fuel, and domestic research reactor fuel, except as noted in WASRD (DOE 2007 [DIRS 169992], Section 4.2.3.D, and shall be placed in sealed disposable canisters compatible with all applicable requirements in WASRD, Section 4.3, before acceptance into the repository.

[WASRD, Sections 4.2.3.A, 4.2.3.D, and 4.3. Since the CRCFs only handles disposable canisters of DOE SNF, the second part of the requirement does not apply. These canisters may contain one or more assemblies but will be compliant with other WASRD requirements (e.g., criticality control) if the canister contains multiple assemblies. This criterion also partially satisfies PO&PR (BSC 2008 [DIRS 185008]), Section 2.6.2.]

4.2.1.9.3 DOE SNF of Commercial Origin

The CRCFs shall be designed to receive canistered DOE SNF of commercial origin that

(a) cannot be shown to have handling interfaces functionally interchangeable with those of an intact assembly from either a commercial BWR or PWR, or

(b) has known or suspected defects (to either structural components or to cladding beyond hairline cracks or pinhole leaks).

DOE SNF of commercial origin that meets either condition requires isolation and special handling and will be placed in a disposable canister to be handled as a DOE SNF standardized canister within the CRCFs.

[WASRD (DOE 2007 [DIRS 169992]), Section 4.2.3.D. DOE SNF of commercial origin is only scoped to be received in the CRCFs because of the need to have defective SNF in disposable canisters, and the CRCFs will directly package those canisters. This is also allocated to the Receipt Facility in case this waste stream is placed in a TAD canister and sent to aging.]

4.2.1.9.4 DOE SNF Canister Thermal Limit

The CRCFs shall be designed to receive, transfer, and package DOE SNF canisters with a thermal output at the time of acceptance into the repository of less than 1,970 W (6,720 BTU/hr).

[WASRD (DOE 2007 [DIRS 169992]), Section 4.3.9. The CRCFs are the only facilities identified to receive DOE SNF canisters. The requirement identifies a higher thermal output for these canisters than expected. "Request for Updated U.S. Department of Energy (DOE) Canister Thermal Output Limits in Support of Repository Design (EM-FMDP-06-006)." (Arenaz 2006 [DIRS 176668]) identified the expected thermal maximums.]

4.2.1.9.5 Deleted

[MGR-RD [DIRS 177491], Section 3.1.2H provides specific direction that the naval canisters and the M-290 cask system will only be handled in the IHF (not CRCFs).]

4.2.1.9.6 Deleted

[This requirement for the thermal output for disposable multi-element commercial-origin DOE SNF was deleted from the WASRD (DOE 2007 [DIRS 169992]), Section 4.5.]

4.2.1.9.7 Deleted

[This requirement was combined into Criterion 4.2.1.9.6 .]

4.2.1.9.8 Cladding Temperatures

The CRCFs shall be designed to prevent the cladding temperature for DOE SNF of commercial origin in disposable multi-element canisters, while within the CRCFs, from exceeding the following temperatures:

- 350°C for zirconium alloy-clad assemblies
- 400°C for stainless steel-clad assemblies

[WASRD (DOE 2007 [DIRS 169992]), Section 4.3.10. It should be noted that this requirement does not apply to commercial SNF that is not owned or managed by DOE.]

4.2.1.9.9 Lifting HLW Canisters

The CRCFs shall be designed to lift the standard vitrified HLW form (borosilicate glass sealed inside an austenitic stainless steel canister) from a concentric neck and lifting flange.

[WASRD (DOE 2007 [DIRS 169992]), Section 4.8.1.A describes the waste form and Section 4.8.5 provides for lifting from the flange. IICD Volume 1 (DOE 2007 [DIRS 178792]), Section 13 provides the discussion of the canisters.]

4.2.1.9.10 HLW Canister Size

The CRCFs shall be designed to accommodate the HLW form that can stand upright without support on a flat horizontal surface and fit without forcing into a right-circular, cylindrical cavity 25 in (64 cm) diameter and 9.88 ft (3.01 m) length or alternatively 25 in (64 cm) diameter and 14.8 ft (4.51 m) length~~)~~.

[WASRD (DOE 2007 [DIRS 169992]), Section 4.8.3. Although the WASRD Section 4.8.3 identifies a free-standing HLW canister height as 4.51 m, this is distinctly different than the nominal height of 4.57 m that is identified in Criterion 11.2.2.7. Note that the nominal height is actually larger than the allowable free-standing height. This dimension also happens to be different than the waste package interface cavity length documented in Criterion 11.2.2.7 citation to Figure C-25 of the IICD Volume 1 (DOE 2007 [DIRS 178792]). IICD Section 13 also provides for the two varieties - a short 10-ft by 24-in. canister represented by the canisters developed for DWPF at the SRS and a long 15-ft by 24-in. canister being developed for the River Protection Project Waste Treatment Plant at the Hanford Site. CBCN004 to Revision 001 provided this change.]

4.2.1.9.11 HLW Canister Weight

The CRCFs shall be designed to receive and handle filled HLW canisters with a weight not to exceed 9,260 lb (4,200 kg).

[WASRD (DOE 2007 [DIRS 169992]), Section 4.8.4.]

4.2.1.9.12 HLW Canister Grapple

The CRCFs shall provide for canister grapples for HLW:

1. The Producer shall provide a grapple design suitable for use in loading or unloading a transportation cask with a standard 3.0 m (9.9 ft) HLW canister or standard 4.5 m (15 ft) canister
2. The grapple, when attached to the hoist and engaged with the flange, shall be capable of moving the canistered waste form in the vertical direction
3. The grapple shall be capable of being remotely engaged with and remotely disengaged from the HLW canister flange
4. The grapple shall be capable of being engaged or disengaged while remaining within the projected diameter of the waste form canister
5. The grapple shall include safety features that prevent inadvertent release of a suspended canistered waste form.

[WASRD (DOE 2007 [DIRS 169992]), Section 4.8.5.]

4.2.1.9.13 HLW Canister Drop Capability

The CRCFs shall not lift HLW canisters higher than 23 ft (7 m) above a flat, essentially unyielding surface without breaching or dispersing radionuclides. Lift height limits can be exceeded provided that energy-absorbing material is used to limit the impact energy to that of the drop height limit.

[WASRD (DOE 2007 [DIRS 169992]), Section 4.8.8.]

4.2.1.9.14 HLW Canister Thermal Limit

The CRCFs shall be designed to receive, transfer, and package canisters containing HLW or HLW and IPWF with a total heat generation rate not to exceed 1,500 watts per canister at the year of shipment. All systems designed to handle HLW canisters, during normal operations, shall ensure that the maximum temperature of the vitrified glass does not exceed 400°C.

[WASRD (DOE 2007 [DIRS 169992]), Section 4.8.13. IICD Volume 1 (DOE 2007 [DIRS 178792]), Section 13 provides the temperature criterion.]

4.2.1.9.15 Immobilized Plutonium Waste Form

The CRCFs shall be designed to receive and handle some of the DWPF canisters that could contain plutonium incorporated into glass in cans arranged within a vitrified HLW canister, i.e., IPWF. The IPWF canisters are dimensionally identical to DWPF HLW canisters. The final composition of the plutonium waste form has not been determined.

[Although the requirement for IPWF was deleted from WASRD (DOE 2007 [DIRS 169992], Section 4.8, it was subsequently restored through the IICD Volume 1 (DOE 2007 [DIRS 178792]), Section 13.]

4.2.1.9.16 Tamper-Indicating Seal Removal

The CRCFs shall be designed to remove any tamper indicating seals or locks from transportation casks and/or associated conveyances for strategic SNM.

[10 CFR 70.51 [DIRS 182681], 10 CFR 73.26 [DIRS 181969], and WASRD (DOE 2007 [DIRS 169992]), Sections 4.2.9.A and 4.2.9.B.]

4.2.1.9.17 Cask Sizes

The CRCFs shall be designed to receive transportation casks having dimensions shown in Table 4-1 and the TAD canister transportation overpack (not included in Table 4-1).

Table 4-1. Rail Transportation Cask Bounding Characteristics (Excluding the TAD Canister Transportation Overpack)

Characteristic	CSNF Design (Min-Max)	CSNF Purchasing (Min-Max)	DSNF & HLW Design (Max)[e]	Ref. Dim. [a]
Cask length without impact limiters (in.)	182-234	200-225	234	A
Cask diameter without impact limiters (in.)	40-108	44-98	100[d]	C
Cask length with impact limiters (in.)	220-370	242-333	340	B
[Cask] diameter with impact limiters (in.)	65-144	72-140	144	F
Distance across upper trunnion (in.)	40-120	44-108	--	D
Cask closure lid diameter (in.)	20-88	22-79	--	E
Cask closure lid weight (lb)	<15,000	<15,000	--	--
Cask weight when fully loaded (lb)[b]	<280,000	<280,000	--	--
Impact limiter maximum weight, pair (lb)	25,000	25,000	--	--
Max height of the centerline of the upper cask trunnions above the floor or rail upon which the conveyance rests during upending and removal of cask from conveyance (in.)	296	330	--	--
Maximum distance between centerline of upper trunnions and top of cask (in.)	46	51	--	G
Maximum distance between centerline of lower trunnions and bottom of cask (in.)	51	56	--	H
Minimum available crane under-hook clearance (in.)[c]	480	480	--	--

[a] Letters in "Reference Dimension" column refer to the dimensions identified in Figure 4-1.

[b] Without impact limiters installed.

[c] Minimum distance from the facility floor surface to the palm of the crane hook at its maximum elevation

[d] With trunnions attached, maximum diameter is 108 in.

[e] For truck casks with impact limiters, dimensions are 245 in. long by 96 in. diameter. With impact limiters removed dimensions are 200 in. long by 48 in. diameter (at the trunnions).

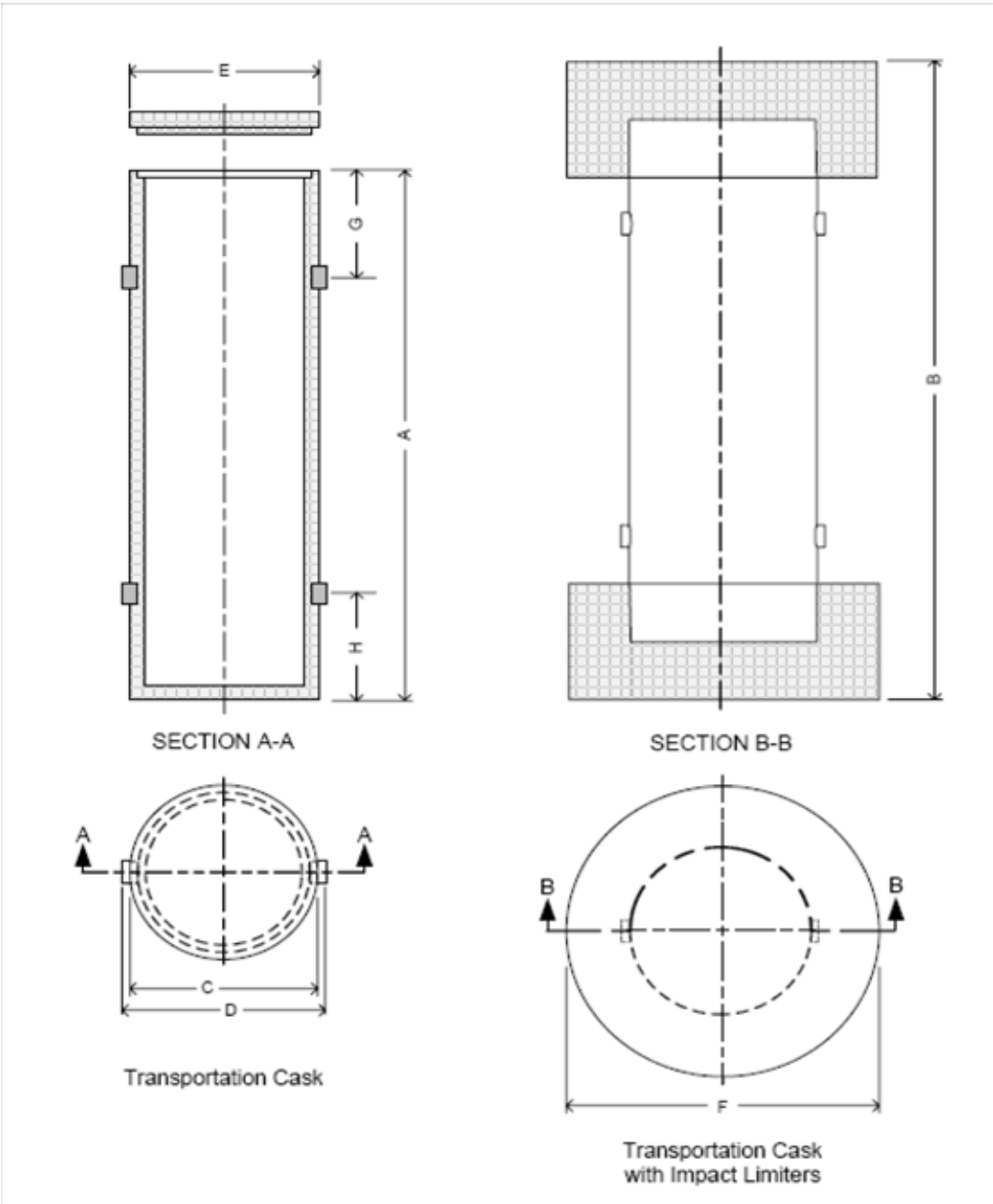

Figure 4-1. Generic Transportation Cask Illustrating the Location of Dimensions

[IICD Volume 2 (DOE 2007 [DIRS 176810]), Section 3.1.2.2. Table 4-1 summarizes characteristics for DPC and bare fuel rail cask designs and does not include the TAD canister casks. IICD Volume 1 (DOE 2007 [DIRS 178792]), Section 7 provided DOE SNF and HLW cask characteristics. Truck casks are significantly smaller in size and weight than rail casks; thus, Table 4-1 bounds truck cask designs.]

4.2.1.9.18 Cask Hook Weight

The CRCFs shall be designed for the maximum hook weight for any lift of the loaded rail cask not to exceed 400,000 lbs (including lifting features, personnel barriers, and impact limiters).

[TSRD (DOE 2006 [DIRS 181305]), Section 3.2.1.1.1. This value exceeds the casks weights allowed by IICD Volume 2 (DOE 2007 [DIRS 176810]), Section 3.1.13 (305,000 lbs in Criterion 4.2.1.9.17) and the 360,000 lbs specified in Transportation, Aging, and Disposal Canister System Performance Specification (DOE 2007 [DIRS 181403]), Section 3.2.]

4.2.1.9.19 Rail Carrier Size

The CRCFs shall be designed to receive rail transportation cask/carriers with dimensions less than or equal to those of AAR Plate F dimensions. This is shown as interfaces on IICD Volume 1 (DOE 2007 [DIRS 178792]) Figure C-1.

[IICD Volume 1 [DIRS 178792], Sections 7.3 and 7.6, Table 1, and Appendix C, Figure C-1. The IICD Volume 1 constrains this to Plate F (AAR 2004 [DIRS 169910]. Repository auxiliary equipment and parking area interfaces are currently bounded by the repository designs for the potential generic building doors and setbacks and are not shown separately.]

4.2.1.9.20 Railroad Shipments

The CRCFs shall be designed to accommodate rail transportation cask shipments with the following characteristics:

1. Railroad shipments made under the AAR standard of unrestricted interchange
2. The transportation cask system, including impact limiters, tie-downs, and other related transportation equipment, shall be compatible with AAR Plate F dimensions.
3. The combined railcar/cask carrier (gross railcar, cask, skid, and impact limiters) to be accepted into the repository shall not exceed 65,750 lbs gross weight per axle (e.g., 263,000 lbs gross weight for a 4-axle railcar, 394,500 lbs for a 6-axle railcar, or 526,000 lbs for an 8-axle railcar).
4. Cask railcars having a maximum width of 128 in.
5. Cask railcars having a maximum length of 90 ft.
6. Cask railcars having a coupler-to-coupler distance of 93 ft 4 in. (based on a review of rail industry rolling stock).

[AAR 2004 [DIRS 169910] provides for unrestricted interchange and Plate F. IICD Volume 2 (DOE 2007 [DIRS 176810]), Section 3.1.10 provides Items 4-6. Although IICD Volume 2~~II~~ refers to a 1992 version of AAR, the repository will utilize AAR 2004.]

4.2.1.9.21 Truck Dimensions

The CRCFs shall be designed to receive truck-based transportation casks containing SNF and HLW and empty waste packages on trucks and trailers with the following maximum characteristics:

- LWT with the combined legal-weight of the truck/cask carrier not exceeding a tandem axle gross weight of 34,000 lbs and an overall gross weight of 80,000 lbs.
- OWT with the combined weight of the truck/cask carrier being greater than 80,000 lbs gross vehicle weight, but not more than 90,000 to 105,000 lbs depending on the particular state transited.
- LWT or OWT flatbed trailers with a maximum width of 102 in.
- LWT or OWT flatbed trailers with a maximum length of 53 ft.

[Heavy-haul vehicles have been eliminated IICD Volume 1 (DOE 2007 [DIRS 178792], Section 5.1. Section 7.2 and Figure B-1 provide information for LWT transportation systems that are bounded by rail. IICD Volume 2 (DOE 2007 [DIRS 176810]), Section 3.1.10 provides trailer dimensions for the LWT and OWT. A state may not limit the length of a semitrailer in a truck tractor-semitrailer combination to less than 48 ft or less than a grandfathered length. Although the grandfathered length limit is 53 ft for the State of Nevada, approximately half of the remaining states limit trailer length to 48 ft. Repository auxiliary equipment and parking area interfaces are currently bounded by the repository designs for the potential generic building doors and setbacks and are not shown separately.]

4.2.1.9.22 Maximum Lift Height of Multi-Element Canisters

The CRCFs shall be designed so that the maximum lift heights of the various DOE canisters do not exceed their design limits. Disposable multi-element canisters, disposable commercial-origin DOE SNF canisters, and IPWF canisters will be capable of sustaining a flat bottom drop from a height of 23 ft and a drop in any orientation from a height of 2 ft (individually - not both in sequence) onto an essentially unyielding surface without release of radionuclides.

[WASRD (DOE 2007 [DIRS 169992]), Section 4.3.5. For the flat-bottom drop, this requirement can be met by limiting canister impact loads through design of the cask-canister system and disposal container-canister system.]

4.2.1.9.23 Deleted

[This requirement for HLW canisters factors such as pyrophoricity, explosivity, etc. being prevented or mitigated was deleted from WASRD (DOE 2007 [DIRS 169992]), Section 4.8.]

4.2.1.9.24 Canister Labels

The CRCFs shall be designed to allow reading the disposable DOE SNF, multi-element DOE SNF, and HLW canisters legible, unique identifier that is permanently attached to the canister and to provide for recording information that is traceable to the permanent records of the canister and its contents.

[WASRD (DOE 2007 [DIRS 169992]), Sections 4.3.4 and 4.8.7.]

4.2.1.9.25 Canister Lifting Fixture

The CRCFs shall be designed to conduct all vertical lifts and horizontal translations of DOE SNF, and multi-element disposable SNF canisters while suspending the canisters from above via their lifting features.

[WASRD (DOE 2007 [DIRS 169992]), Section 4.3.2.]

4.2.1.9.26 Remediation

The CRCFs shall be designed to include adequate space, tools, and radiation protection features (shielding, radiation monitors, and HVAC confinement zones) to allow repair/rework of waste packages or canisters or space to safely segregate the non conforming item until a resolution can be developed and implemented.

- Damaged canisters shall be inspected to determine the severity of damage.
- Non-conforming canisters shall be reworked, as appropriate, to meet WP loading requirements.
- Non-conforming HLW and SNF canisters shall be staged.
- Sealed, damaged WPs shall be vented, purged, and opened, as required.
- Establish confinement within the repair or rework area prior to conducting repair or rework activities (as appropriate).
- Once recovery from off-normal conditions has been completed, return the SNF and WPs to processing.

[BCP YMP-2006-053 [DIRS 177483], Block 11, Page 6 of 1159. The bulleted items are provided from the PO&PR (BSC 2008 [DIRS 185008]), Sections 2.4.3, 2.4.4, 2.4.5, 2.4.7, and 2.4.8. Currently, the CRCFs do not have space to safely segregate nonconforming items. A project change will have to be initiated to address the methodology as referenced in BCP YMP-2006-053.]

4.2.1.9.27 Canister Leak Rates

The CRCFs shall be designed to receive HLW canister sealed and leak tight. Canister gas leak rates shall be less than 1×10^{-4} ref cc/sec.

[WASRD (DOE 2007 [DIRS 169992]), Section 4.8.6.]

4.2.1.10 Personnel Barriers

The CRCFs shall provide for removal or retraction of personnel barriers from around the cask while in the preparation areas.

[IICD Volume 1 (DOE 2007 [DIRS 178792]), Section 8.1. Although IICD Volume 2 (DOE 2007 [DIRS 176810]), Section 3.1.12 allows personnel barriers to be removed/reinstalled at the repository preliminary inspection area just inside security area, this does not negate the need for this nuclear facility capability. Personnel barriers are generally cages placed around the transportation system cask barrel and between the impact limiters to restrict personnel access to the cask surface. Personnel barriers will be included as part of the transportation system by the Regional Servicing Contractor, as applicable. Personnel barrier details, such as fastener and lifting connections dimensions, for transportation systems to be used to ship DOE-EM and DOE HLW are not currently available based on the stage of transportation system design or specification. Since personnel barrier details are not currently available, interface parameters are not included at this time. This criterion also meets PO&PR (BSC 2008 [DIRS 185008]),Section 2.2.7.]

4.2.1.11 Impact Limiters

The CRCFs shall provide for removal of the impact limiters from the cask while in the preparation areas.

[IICD Volume 1 (DOE 2007 [DIRS 178792]), Section 8.2. Impact limiters are energy-absorbing cylindrical, conical, or domed structures affixed at the ends of the transportation system casks during shipment. They will be included as part of the transportation system by the Regional Servicing Contractor, as applicable. Impact limiter details, such as fastener and lifting connections dimensions, for transportation systems to be used to ship DOE-

EM and DOE HLW, are not currently available based on the stage of transportation system design or specification. Since impact limiter details are not currently available, interface parameters are not included at this time. This criterion also meets PO&PR (BSC 2008 [DIRS 185008]), Section 2.2.7.]

4.2.1.12 Hold-down Features

The CRCFs shall provide for removing the hold-down features while the cask is in the preparation areas.

[IICD Volume 1 (DOE 2007 [DIRS 178792]), Section 8.3. Hold-down features are used to restrain the movement of the cask on the transportation system skid. They may consist of straps circling the cask body that are bolted to the skid or pillow blocks or clamps that are bolted around the cask trunnions. Strap type hold-down features restrain only vertical movement of the transportation cask on the skid and require additional features to restrain horizontal movement. Pillow block and clamp type hold-down features restrain vertical and horizontal movement of the transportation cask on the skid. The hold-down features will be included as part of the transportation system by the Regional Servicing Contractor, as applicable. The hold-down feature details, such as fastener and lifting connection dimensions, for transportation systems to be used to ship DOE-EM and DOE HLW, are not currently available based on the stage of transportation system design or specification. Since hold-down feature details are not currently available, interface parameters are not included at this time. This criterion also meets PO&PR (BSC 2008 [DIRS 185008]), Section 2.2.7.]

4.2.1.13 Packaging Aged TAD Canisters

After CSNF is aged to an acceptable thermal limit in a TAD canister in an aging overpack, it shall be packaged in WPs and emplaced.

[PO&PR (BSC 2008 [DIRS 185008]), Section 2.5.6 provides the basis for the aging pad capability.]

4.2.2 General Requirements

4.2.2.1 Emergency Management

The CRCFs shall provide for an operations room or area that shall be capable of conducting emergency management functions for events sequence recovery within the facility.

[RGA REG-CRW-RG-000455 (BSC 2007 [DIRS 184409]), Section 1.2 provided agreement that an area within the nuclear facility shall perform the appropriate functions of control rooms when activated for emergency management activities. Other facilities including the CCC, the on-site EOC in the Administration Facility, and the off-site EOF have primary responsibility for managing emergencies.]

4.2.2.2 Waste Package Preparation for Closure

The CRCFs shall prepare for and perform waste package closure operations. This includes moving the waste packages from loading areas to closure areas, as necessary.

[This criterion partially satisfies the functional requirement PO&PR (BSC 2008 [DIRS 185008]), Sections 2.2.25.]

4.2.2.3 Service Life

The CRCFs shall be designed, constructed, and maintained to incorporate standard materials and practices appropriate for the specific building type facilitating a 50-year operational service life.

[This is a derived requirement from Criteria 2.2.2.7. BCP YMP-2006-053 [DIRS 177483], Block 11, Page 12 of 1159, specifies the duration of the preclosure period for the surface facilities as 50 years.]

4.2.2.4 South Texas TAD Canister

The CRCFs shall be designed to accommodate the South Texas transportation cask, the South Texas TAD canister, and the South Texas aging overpack, without modification, in accordance with the following criteria:

- The TAD Canister shall contain 12 fuel assemblies
- The aging overpack shall be 23’-6” in length, with a weight no greater than 400,000 pounds (including lifting features, personnel barriers, and impact limiters).
- The TAD Canister shall be 230 inches long by 52 inches in diameter and shall weigh no greater than 100,000 pounds
- The waste package shall be 248 inches long by 63 inches in diameter and shall weigh no greater than

125,000 pounds
- The transportation cask shall be 21'-6" long, without impact limiters, and shall weigh no greater than 330,000 pounds

[TMRB-2007-025 (BSC 2007 [DIRS 181499]), TMRB Decision Proposal, Activities Not to Preclude Handling of South Texas Commercial Spent Nuclear Fuel in the Surface Facilities. TSRD (DOE 2006 [DIRS 181305]), Section 3.2.1.1.1. includes lifting features, personnel barriers, and impact limiters in the loaded cask weight.]

4.2.2.5 Not Used

4.2.2.6 Staging Capacity

The CRCFs shall be designed to provide staging for up to 10 DOE SNF canisters.

[DOE RW-0600 (DOE 2003 [DIRS 167367]), Table I 1.5.04.01.02. Although this document is cancelled and provided the requirement for the Canister Handling Facility, interim staging is still required for the CRCFs. Therefore, this requirement text was retained from the previous facility design concept.]

4.2.2.7 IICD Volume 1 Compliance

The CRCFs design shall comply with the agreements established under the IICD Volume 1 (DOE 2007 [DIRS 178792]) to ensure compatibility of HLW and DOE SNF waste forms with repository surface facility interfaces, including canister handling interfaces and compatibility between transportation equipment (e.g., transporters) and transported items (e.g., casks and canisters) with mechanical and envelope interfaces.

[CRD (DOE 2007 [DIRS 182960]), Section 3.2.1H, as flowed down through the MGR-RD [DIRS 177491], Section 3.1.2.B.]

4.2.2.7.1 Dimensions

Dimensions for transporters and transportation system casks and canisters are measured at a temperature of 70ºF ± 8ºF unless otherwise specified.

[IICD Volume 1 (DOE 2007 [DIRS 178792]), Section 5.1. Many of the IICD figures contain measurements that include tolerance stackups including for thermal expansion. Specific use of the temperature/tolerance stackups is only noted on the appropriate figures.]

4.2.2.7.2 Transportation Cask Handling

The CRCFs shall be designed to receive transportation casks containing disposable DOE SNF and HLW canisters in a horizontal orientation, rotate the casks to a vertical orientation, and then handle the casks while in the vertical orientation.

[IICD Volume 1 (DOE 2007 [DIRS 178792]), Section 5.2.a. After removing the transportation cask from the transporter, the vertical-handling concept includes moving and lifting transportation casks, removing canisters from transportation casks, and loading disposable canisters for subsequent placement into waste packages.]

4.2.2.7.3 Skid Handling

The CRCFs shall be designed to handle rail or legal-weight truck transportation systems directly. Although current surface facility concepts do not anticipate removal of any cask shipping skid, the CRCFs design shall facilitate lifting the loaded package in its transportation configuration, including the skid and impact limiters, and transfer of the package from one conveyance to another. Truck casks will be delivered without handling skids. The CRCFs handling equipment shall be designed to lift skids with the following bounding characteristics.

- 124 in. maximum width
- 318 in. maximum length (between lift points)
- 360 in. maximum length (overall)
- 150 in. maximum height (to top of personnel barrier)
- Exactly 4 Lifting Points
- Liftable from below a maximum hook lift height of 42 ft above the rail

[IICD Volume 1 (DOE 2007 [DIRS 178792]), Assumption 5.3 and Section 7.4, which discusses transportation

skids, no longer specifies skid handling. Potential interfaces, including generic buildings and gates at the CRCFs, are provided in the IICD. The Holtec International HI-STAR 100 transportation cask cannot be up-ended while on the handling skid fixed to the conveyance. This particular cask will either need to be handled by the intermodal skid or be removed from the skid in a horizontal orientation and placed on a separate, temporary skid. Once on the temporary skid, the impact limiters can be removed. The transportation cask must then be lifted horizontally and placed on an L-Frame, or similar device for up ending. Thus, while the skid may not be removed from the conveyance for the HI-STAR 100, a separate skid and up ending device will be required. For more specific handling operations and information, see Chapter 7-Operating Procedures, in the Storage, Transport, and Repository Cask Systems, (Hi-Star Cask System) Safety Analysis Report, 10 CFR 71, Docket 71-9261 (Holtec International 2003 [DIRS 172633]). IICD Volume 2 (DOE 2007 [DIRS 176810]), Section 2 and 3.1.11.1 provides skid characteristics.]

4.2.2.7.4 Disposable Canister Acceptance

The CRCFs shall be designed to handle only those transportation system casks and disposable canisters meeting CRWMS acceptance criteria. The CRCFs shall handle all disposable canisters of DOE SNF and HLW.

[IICD Volume 1 (DOE 2007 [DIRS 178792]), Assumptions 5.4. and 5.15.]

4.2.2.7.5 No Handling Canister Contents

The CRCFs shall be designed to handle disposable canisters and not be designed to handle the canister contents.

[IICD Volume 1 (DOE 2007 [DIRS 178792]), Assumption 5.6.]

4.2.2.7.6 Canister Disposability Evaluations

The CRCFs shall be designed to handle disposable canisters containing DOE-EM SNF, except for DOE-owned SNF accepted for management using the commercial-origin receipt/disposal system, meeting applicable disposability requirements.

[IICD Volume 1 (DOE 2007 [DIRS 178792]), Assumption 5.13 only mentions disposable canister. It is silent on the commercial origin receipt/disposal system.]

4.2.2.7.7 Deleted

[This requirement was deleted as duplicate of Criterion 4.2.1.9.19.]

4.2.2.7.8 Cask Responsibilities

The CRCFs shall be designed to accommodate the transportation system for carrying HLW to the repository, as specified in the IICD Volume 1 (DOE 2007 [DIRS 178792]) Figure B-4.

[IICD Volume 1 (DOE 2007 [DIRS 178792]), Section 9.1. The cask is the foundation of the transportation system for carrying HLW to the repository. The memorandum of agreement (MOA) between OCRWM and DOE-EM (Roberson and Chu 2003 [DIRS 171933]) currently specifies that the HLW cask will be designed, NRC certified, and fabricated (with the rest of the transportation system) by OCRWM. DOE-EM developed a transportation system concept as potential inputs for future repository design activities. It has also been suggested that OCRWM may contract transportation services for DOE and HLW to a regional service contractor. IICD Volume 1, Figure B-4 now provides for an interface at the DOE-EM sites with the potential CRWMS transportation system cask and also provides some inputs for development of the CRCFs.]

4.2.2.7.9 Deleted

[MGR-RD [DIRS 177491], Sections 3.1.2.G and 3.1.2.H. provides specific direction that the naval canisters and the M-290 cask system will only be handled in the IHF (not CRCFs).]

4.2.2.7.10 Deleted

[MGR-RD [DIRS 177491], Sections 3.1.2.G and 3.1.2.H. provides specific direction that the naval canisters and the M-290 cask system will only be handled in the IHF (not CRCFs).].

4.2.2.7.11 Standardized Canister Interfaces

The CRCFs shall be designed to receive, unload, and package DOE SNF standardized canisters with interfaces shown on IICD Volume 1 (DOE 2007 [DIRS 178792]), Figures C-4 through C-14.

[IICD Volume 1 (DOE 2007 [DIRS 178792]), Section 10.1.2 and Figures C-4 and C-5 provide interfaces for the

18-in. diameter standardized SNF canisters illustrated in the IICD. The maximum canister-handling fixture envelope for the 18-in. diameter standardized canisters (both lengths having the same handling interface) is shown in Figure C-6. Figures C-7 and C-8 provide the dimensional interfaces for the 18-in. diameter standardized SNF canisters and the waste package. Figures C-9 and C-10 provide interfaces for the 24-in. diameter standardized SNF canisters. The maximum canister handling fixture envelope is shown in Figure C-11 for the 24-in. diameter standardized SNF canisters (both lengths having the same handling interface). Figures C-12 and C-13 for the dimensional interfaces for the 24-in. diameter standardized SNF canisters and the waste package are placeholders.

The National Spent Nuclear Fuel Program (NSNFP) standardized canisters must fit within various repository surface facility envelopes and handling equipment parameters as well as into the envelope in the appropriate disposal container. The facility envelopes are primarily the small canister staging racks. The staging rack positions or cells are uniform and have the same dimensions. The length and diameter of the 24-in. diameter standardized canisters and other canisters bound the length of the 18-in. diameter by 15-ft long standardized canisters; therefore, their interface with the staging rack is not shown.

The largest diameter canister interface with the staging rack is the MCO identified in Section 10.2 and shown on Figure C-14. The smallest SNF canister interface with the small canister staging rack is with the 18-in. diameter by 10-ft long canister and is shown on Figure C-14. Weight restrictions for each of the NSNFP standardized canisters are identified on the corresponding figures. Although DOE-EM provided handling details of the NSNFP standardized canister (i.e., skirt and lifting ring dimensions), mechanical details for the handling fixture have not been provided for either the 18-in. diameter or the 24-in. diameter canisters. The lifting fixtures, however, are constrained to operate within the nominal diameter of the canister.]

4.2.2.7.12 Hanford MCO

The CRCFs shall be designed to receive, unload, and package the Hanford MCO with interfaces shown on IICD Volume 1 (DOE 2007 [DIRS 178792]), Section 10.2.1 and Figures C-15 and C-16.

[IICD Volume 1, Section 10.2.1. The Hanford MCO, consists of a stainless steel shell, a shield plug, and five or six fuel baskets for DOE-EM-owned SNF. The MCO shall be received with its welded cover installed that would contribute to the canister's disposability (Assumption 5.7). Permanent labeling or markings will not exceed the maximum canister envelope dimensions (i.e., manufacturing tolerances). The MCO dimensions after being filled and stood vertically on a flat surface is a right-circular cylinder with the dimensions given on Figure C-15. The maximum weight of the MCO is shown on Figures C-15 and C-16. MCO center of gravity constraints and details of an associated MCO shipping cask are not available. The Hanford MCO fits into the 2 MCO/2 DHLW waste package configuration.]

4.2.2.7.13 Hanford MCO/Rack Interface

The CRCFs shall be designed to lift, rack and stage, and package the MCO canisters as specified in IICD Volume 1 (DOE 2007 [DIRS 178792]) Section 10.2.2 and Figures C-14 and C-15.

[IICD Volume 1, Section 10.2.2. Limited staging for the MCO shall be provided in the CRCFs. The MCO canisters bound the diameters of the other DOE-EM SNF canisters, including the standardized canisters, and provide the largest potential interface for DOE EM owned SNF and the small canister staging rack in the CRCFs as shown on Figure C-14. The MCO handling interface is a lifting ring on the cover. The canister cover is an integrally machined axisymmetric lifting ring designed to support a 12-ton load when gripped with six equally spaced grippers. Each gripper must have a 50-mm (1.97-in.) tangential arc length and a 16.75-mm (0.66-in.) radial engagement length. MCO canister cap details that would interface with the repository lifting fixtures are illustrated in Figure C-15. In addition, the canister-handling fixture will operate within the nominal diameter of the canister cover. MCO canister interfaces with the 2 MCO/2 DHLW waste package design are identified on Figure C-16.]

4.2.2.7.14 Deleted

[MGR-RD [DIRS 177491], Section 3.1.2.H provides specific direction that the naval canisters and the M-290 cask system will only be handled in the IHF (not CRCFs).]

4.2.2.7.15 Deleted

[This requirement was combined into Criterion 4.2.1.9.6.]

4.2.2.7.16 Deleted

[The DOE SNF of commercial origin canisters dimensional envelope and canister weights were deleted from the WASRD (DOE 2007 [DIRS 169992]), Section 4.5.]

4.2.2.7.17 DWPF HLW Canister/Rack Interfaces

The CRCFs shall be designed to receive and handle DWPF HLW canisters as specified in IICD Volume 1 (DOE 2007 [DIRS 178792]) Figure C-22 for the small canister staging rack.

[IICD Volume 1 (DOE 2007 [DIRS 178792]), Section 13.1. Figure C-22 illustrates the dimensional interfaces for the DWPF HLW canister and small canister staging rack.]

4.2.2.7.18 Hanford HLW Canister/Rack Interface

The CRCFs shall be designed to receive and handle Hanford HLW canisters as specified in IICD Volume 1 (DOE 2007 [DIRS 178792]) Figure C-23 for the small canister staging rack.

[IICD Volume 1 (DOE 2007 [DIRS 178792]), Section 13.2, Figure C-23 illustrates the dimensional interfaces for the Hanford HLW canister and small canister staging rack.]

4.2.2.7.19 INL HLW Canisters

The CRCFs shall be designed to receive and handle INL HLW canisters.

[IICD Volume 1 (DOE 2007 [DIRS 178792]), Section 13.3. The HLW canisters being considered for the Idaho National Laboratory (INL) have not been specified but are conceptually thought to be similar to the DWPF HLW canisters. However, INL may consider optimizing HLW shipping to the repository using both short and long canisters. The canister alphanumeric identifiers are expected to be of an ID0000 series.]

4.2.2.7.20 WVDP HLW Canisters

The CRCFs shall be designed to receive and handle WVDP HLW canisters as specified on IICD Volume 1 (DOE 2007 [DIRS 178792]), Figures C-29 and C-30.

[IICD Volume 1 (DOE 2007 [DIRS 178792]), Section 13.4. HLW from the West Valley Demonstration Project (WVDP) is contained in canisters similar in gross external dimensions to the DWPF HLW canisters. The fill neck and flange are wider and the canisters are loaded to a higher MTHM equivalent than the standard HLW glass form being poured into the DWPF HLW canisters. Although canister dimensional parameters are available, WVDP has not negotiated a contract with OCRWM for disposal of the waste at the repository. Detailed information about the canisters may be obtained from Characteristics of Potential Repository Wastes (DOE 1992 [DIRS 102588]). The canister alphanumeric identifiers shall be of a WV 000 series.]

4.2.2.7.21 HLW Canisters

The CRCFs shall receive all vitrified HLW in sealed disposable canisters designed specifically for vitrified HLW.

[IICD Volume 1 (DOE 2007 [DIRS 178792]), Section 13. This requirement is only allocated to the IHF and CRCFs that will handle HLW canisters. The standard vitrified HLW form shall be borosilicate glass sealed inside an austenitic stainless steel canister with a concentric neck and lifting flange. The CRCFs shall receive two varieties - short and long HLW canisters represented by the canisters developed at DWPF at SRS or by the proposed canister concept developed for the RPP-WTP at the Hanford Site.]

4.2.2.7.22 Thermal Design of SSCs for the DOE Standardized Canisters

All systems designed to handle DOE standardized SNF canisters, during normal operations, shall ensure that canister temperatures will not exceed 315.5°C in enclosed environments and 148.9°C in open (air) environments.

[IICD Volume 1 (DOE 2007 [DIRS 178792]), Section 10.1.3. Compliance with the above requirements shall be shown to be achievable for any SSC that relies on the performance of the canister pressure vessel boundary. This includes activities from the loading of EM SNF into disposable canisters through final closure of the waste package. Further verification of the above temperature limits may be required. The temperature constraints are considered applicable for handling operations.]

4.2.2.7.23 Thermal Design of SSCs for MCO

All systems designed to handle Hanford MCO's, during normal operations, shall ensure that canister wall temperatures do not exceed 132°C in either enclosed or open (air) environments.

[IICD Volume 1 (DOE 2007 [DIRS 178792]), Section 10.2.3. Compliance with the above requirements shall be shown to be achievable for any SSC that relies on the performance of the canister pressure vessel boundary. This includes activities from the loading of EM SNF into disposable canisters through final closure of the waste package. Further verification of the above temperature limit may be required.]

4.2.3 Safety and Protection Requirements

4.2.3.1 NSDB Requirements

4.2.3.1.1 Structural Integrity

The CRCFs' structures shall be designed to maintain building structural integrity to protect ITS SSCs inside the building from external events and to protect against building collapse onto waste containers (safety functions).

- The mean frequency of building collapse due to:
  - -- extreme winds less than or equal to 120 mph shall not exceed 1×10^{-06}/yr.
  - -- volcanic ashfall less than or equal to a roof live load of 21 lb/ft^2 shall not exceed 1.0×10^{-06}/yr.
  - -- the spectrum of seismic events shall be less than or equal to 2.0×10^{-06}/yr.

[Preclosure NSDB (BSC 2008 [DIRS 184200]), Appendix D, Table D-1, Items CR.01, CR.02, and CR.04.]

4.2.3.1.2 Heliport Location

The CRCFs' structures shall be designed to maintain building structural integrity to protect ITS SSCs inside the building from external events (safety function).

- The CRCFs shall be located such that there is a distance of at least one-half mile between the CRCFs and the repository heliport.

[Preclosure NSDB (BSC 2008 [DIRS 184200]), Appendix D, Table D-1, Item CR.03.]

4.2.3.1.3 Moderator Control

The CRCFs shall be designed to maintain moderator control (safety function).

- The mean probability of inadvertent introduction of water from sources other than fire suppression into a canister shall be less than or equal to 1.0×10^{-03} over a 720-hour period following the breach of a canister.
- In conjunction with the fire detection and suppression systems, the mean probability of inadvertent introduction of fire suppression water into a canister shall be less than or equal to 1.0×10^{-06} over a 720-hour period following the breach of a cask-canister system.

[Preclosure NSDB (BSC 2008 [DIRS 184200]), Appendix D, Table D-1, Items CR.05, FP.CR.01 and FP.CR.02. This criterion also partially satisfies PO&PR (BSC 2008 [DIRS 185008]), Section 2.6.2.]

4.2.3.1.4 TEV Rails Inside the CRCFs

The rails for the TEV inside the CRCFs shall be designed to protect against derailment of the TEV during loading of a waste package [into the TEV] (safety function).

- The mean frequency of the TEV derailment due to failure of the TEV rail system (at the loadout station) due to the spectrum of seismic events shall be less than or equal to 1.0×10^{-04}/yr.

[Preclosure NSDB (BSC 2008 [DIRS 184200]), Appendix D, Table D-1, Item CR.06.]

4.2.3.1.5 Shield and Confinement Doors

The CRCFs' shield doors (including anchorages) and confinement doors shall be designed to protect against direct exposure of personnel, to preclude collapse onto waste containers, to mitigate the consequences of radionuclide release, and to protect against equipment shield door collapse onto a waste container (safety functions).

- Equipment and personnel shield doors shall have a mean probability of inadvertent opening due to interlock failure of less than or equal to 2.0×10^{-07} per waste container handled.
- An equipment shield door falling onto a waste container as a result of impact from a conveyance shall be precluded.

- The mean probability that the HVAC system in the CRCF confinement areas becomes unavailable during a 30-day mission time following a radionuclide release due to the simultaneous opening of any two or more doors that are either (a) equipment confinement doors or (b) equipment shield doors with a confinement function shall be less than or equal to 3.0×10^{-07}.
- The mean frequency of collapse of equipment shield doors (including attachment of door to wall and frame anchorages) due to the spectrum of seismic events shall be less than or equal to 6.0×10^{-06}/yr.

[Preclosure NSDB (BSC 2008 [DIRS 184200]), Appendix D, Table D-1, Items CR.07 through 10. For the performance of the Surface Confinement HVAC System, see the criterion in Chapter 19.]

4.2.3.1.6 Slide Gates

The CRCFs' DOE canister slide gates, cask port slide gates, TAD slide gates and waste package port slide gates shall be designed to protect against dropping a canister due to a spurious closure of the slide gate, protect against direct exposure to personnel, preclude canister breach due to a spurious closure of the slide gate onto the canister, and preclude criticality owing to colocation of multiple DOE SNF canisters without separator plates (safety functions).

- The mean probability of a canister drop resulting from a spurious closure of the slide gate shall be less than or equal to 5.0×10^{-06} per transfer.
- The mean probability of occurrence of an inadvertent opening of a slide gate shall be less than or equal to 4.0×10^{-09} per transfer.
- Closure of the slide gate shall be incapable of breaching a canister.
- The TAD slide gates shall be incapable of opening unless the canister transfer machine is centered over it.
- The cask port slide gates shall be incapable of opening when as AO is underneath it, unless the canister transfer machine in centered over it.
- The waste package port slide gates shall be incapable of opening when a waste package transfer trolley carrying a TAD waste package is underneath it, unless the canister transfer machine is centered over it.
- The waste package port slide gate shall be incapable of opening unless a waste pakcage transfer trolley (with shield ring) is positioned below it.

[Preclosure NSDB (BSC 2008 DIRS 184200]), Appendix D, Table D-1, Items CR.HTC.01 through 12. The last 4 bullets do not have assigned criteria numbers.]

4.2.3.1.7 Cask Preparation Platform

The CRCFs cask preparation platform shall be designed to protect against platform collapse or waste container breach due to an impact from the cask transfer trolley or site transporter (safety functions).

- The mean frequency of collapse of the cask preparation platform due to the spectrum of seismic events shall be less than or equal to 3.0×10^{-06}/yr.
- The mean frequency of platform collapse or waste container breach from the impact of the cask transfer trolley or site transporter into the platform due to the spectrum of seismic events shall be less than or equal to 2.0×10^{-05}/yr.

[Preclosure NSDB (BSC 2008 [DIRS 184200]), Appendix D, Table D-1, Items CR.HMH.01 and 02.]

4.2.3.1.8 Waste Package Transfer Trolley Rails

In conjunction with the waste package transfer trolley, the CRCF rails shall be designed to protect against a tipover of a waste package on a waste package transfer trolley, and protect against rocking of a waste package on a waste package transfer trolley which induces an impact into a wall (safety function).

- The mean frequency of tipover of the WPTT due to the spectrum of seismic events shall be less than or equal to 2.0×10^{-06}/yr.
- The mean frequency of the rocking impact of the WPTT into a wall or column due to the spectrum of seismic events shall be less than or equal to 2.0×10^{-05}/yr.

[Preclosure NSDB (BSC 2008 [DIRS 184200]), Appendix D, Table D-1, Items H.IH.HL.05 and 06. Also see Chapter 13. Criterion that do not have a facility component (such as trolley speed) are not included here.]

4.2.3.1.9 Non-ITS SSCs Interactions with ITS-SSCs

The CRCFs shall be designed such that interactions between non-ITS SSCs and ITS SSCs that upon failure could prevent safety functions from being performed:

- have a probability of failure of less that 1×10^{-04} over the preclosure period (as determined by PCSA),
- will not damage the ITS component if not screened out, or
- damage to the ITS SSC does not result in a doses in excess of the 10 CFR 63.111 [DIRS 180319] performance standard (as determined by PCSA).

The design of the interface shall include the dynamic loads and displacements produced by both sets of SSCs up to the first anchor point beyond the interaction. Additionally, either:

- The collapse of the non-ITS SSC shall not cause it to strike an ITS SSC,
- The collapse of the non-ITS SSC shall not impair the integrity of the ITS SSC, or
- The non-ITS SSC shall be analyzed and designed to the same seismic DBGM as the ITS SSCs subjected to the potential unacceptable interaction.

Acceptable methods of isolating each non-ITS SSC with an adverse interaction include constraints, barriers, or relocation of the non-ITS SSC.

[The wording paraphrases in NUREG-0800, Section 3.7.2, subsection II.8 (NRC 1989 [DIRS 165111]). The discussion of isolation and anchor point boundary for the design is from NUREG-0800, Section 3.7.3, subsection II.8 (NRC 1989 [DIRS 165112]). Although the NUREG is not directly applicable to the repository as it is not a reactor plant, the repository does have both non-ITS and ITS SSCs that should have the same design considerations of the interactions. The specific criterion is contained in the PDC (BSC 2007 [DIRS 179641)], Section 6.1.10.2, for any non-ITS/ITS interactions. This requirement is commonly called the two-over-one requirement.]

4.2.3.2 Fire Protection Requirements

4.2.3.2.1 Passive Fire Protection Features

The CRCFs shall be provided throughout with passive fire protection in the form of fire rated barriers, as determined in the FHA.

[Canister Receipt and Closure Facility 1 Fire Hazard Analysis (BSC 2007 [DIRS 183251]), Section 7.1.3.]

4.2.3.2.2 Automatic Fire Protection Features

The CRCFs shall be provided throughout with automatic fire suppression and automatic fire alarm and detection systems, as determined in the FHA.

[Canister Receipt and Closure Facility 1 Fire Hazard Analysis [(BSC 2007 [DIRS 183251]), Section 7.1.1.]

4.2.3.2.3 Manual Fire Protection Features

The CRCFs shall be provided throughout with portable fire extinguishers, Class III Standpipe, and manual fire alarm initiation devices, as determined in the FHA.

[Canister Receipt and Closure Facility 1 Fire Hazard Analysis (BSC 2007 [DIRS 183251]), Section 7.1.2. Additionally, Regulatory Guide 1.189 [DIRS 155040], Section 3.4.1 states "Interior manual hose installation should be able to reach any location that contains, or could present a fire exposure hazard to, equipment important to safety with at least one effective hose stream" and specifies Class III standpipes to accomplish design.]

4.2.3.2.4 Fire Resistant Materials

The CRCFs shall be designed such that: electrical cabling and other exposed materials meet flame spread and other related requirements; and equipment installed within the facility utilize non-combustible lubricants and hydraulic fluids to the maximum extent practicable, as determined in the FHA. Vehicles entering the facility shall be limited to 100 gallons of diesel fuel per vehicle.

[Canister Receipt and Closure Facility 1 Fire Hazard Analysis (BSC 2007 [DIRS 183251]), Section 7.1.3.]

4.2.3.2.5 Life Safety Provisions

The CRCFs shall be designed to meet life safety provisions such as means of egress, emergency lighting, and other features, as determined in the FHA.

[Canister Receipt and Closure Facility 1 Fire Hazard Analysis (BSC 2007 [DIRS 183251]), Section 7.1.4.]

4.2.3.2.6 Occupant Notification

Local fire alarm occupant notification shall be provided throughout the entire facility originating the alarm. A fire zone alarm panel or graphic zone alarm panel shall be provided at the main entrance to major facilities. A manual fire notification method, such as manual fire alarm initiation devices, shall be provided at all normally occupied facilities.

[DOE O 420.1A [DIRS 159450], Contractor Requirement 4.2.2.6. The alarm panel transmits trouble, supervisory, and alarm signals to the Central Control Center and Fire, Rescue and Medical Facility for appropriate response.]

4.2.3.3 Security Requirements

4.2.3.3.1 Physical Protection

Appropriate access controls for vehicles and personnel, delays at doors and other access points, defensive positions, and mechanical controls on material movement in the canister handling area shall be included in the design.

[DOE M 470.4-2 [DIRS 178562] Chapter VIII.2 ensures that appropriate safeguard and security measures are implemented to protect the CRCF and the SNMs that are handled in the CRCFs.]

4.2.3.3.2 Not Used

4.2.3.3.3 Access Controls

The CRCFs shall be designed to have controls to allow entry to only those individuals authorized to enter the facility.

[10 CFR 73.51(b)(2)(ii) [DIRS 181969]. DOE M 470.4-2 [DIRS 178562] Chapter VIII.2 specifies access controls for areas including for these areas in the CRCFs. This requirement is allocated between the nuclear handling facilities, the Subsurface Facility, BOP, and S&S system.]

4.2.3.3.4 Interior Intrusion Detection

The CRCFs shall be designed to have interior intrusion detection to detect and assess unauthorized penetration or activities within the facility. The CRCFs will use IDS and/or provide remote visual observations to ensure breaches in the security area boundaries for those S&S interests under IDS protection are detected and alarms are annunciated.

[10 CFR 73.51(b)(2)(iii) [DIRS 181969] and DOE M 470.4-2 [DIRS 178562], Chapter VII.2.b. This requirement is allocated between the nuclear handling facilities, the Subsurface Facility, BOP, and S&S system.]

4.2.3.3.5 Loss of Control

The CRCFs physical protection system shall be designed to protect against loss of control of the facility that could be sufficient to cause a radiation exposure exceeding the dose as described in 10 CFR 72.106 (b) [DIRS 181968].

[10 CFR 73.51(b)(3) [DIRS 181969]. This requirement is allocated between the nuclear handling facilities, the Subsurface Facility, BOP, and S&S system.]

4.2.3.3.6 Physical Barriers

The CRCFs building walls shall be designed to provide the second permanent physical barrier for the storage of SNF and HLW offering substantial penetration resistance to control, deny, impede, or delay unauthorized access.

[10 CFR 73.51(d)(1) [DIRS 181969] and DOE M 470.4-2 [DIRS 178562], Chapter IX.4 through IX.8 This requirement is allocated between the nuclear handling facilities, the Subsurface Facility, BOP, and S&S system.]

4.2.3.3.7 Illumination

The CRCFs shall provide for illumination, sufficient to permit adequate assessment of unauthorized penetrations of, or activities within, the facility and surrounding area.

[10 CFR 73.51(d)(2) [DIRS 181969] This requirement is allocated between the nuclear handling facilities, the Subsurface Facility, BOP, and S&S system.]

4.2.3.3.8 Secure Storage

If required, the CRCFs shall be designed to store S&S interests requiring secure storage in vaults, vault-type rooms, vault-type-room complexes, and/or GSA approved security containers.

[DOE M 470.4-2 [DIRS 178562], Chapter XI.1.a. This requirement is allocated between the nuclear handling facilities, the Subsurface Facility, BOP, and S&S system. Although storage is likely a byproduct of operational needs resulting in locked containers, if vaults are specified, they shall be provided.]

4.2.4 Miscellaneous Requirements

4.2.4.1 Surveys and Inspections

The CRCFs shall be designed to provide space and equipment necessary to remotely perform radiological surveys of waste packages and transportation casks, and to perform security inspections of the transportation cask subsystems, surveys of sealed WPs to identify physical damage to the corrosion barrier and ensure they are suitable for emplacement.

[PO&PR (BSC 2008 [DIRS 185008]), Sections 2.2.24, 2.2.29, 2.2.30 and 2.2.31.]

4.2.4.2 Deleted

[MGR-RD [DIRS 177491], Sections 3.1.2.G and 3.1.2.H. provides specific direction that the naval canisters and the M-290 cask system will only be handled in the IHF (not CRCFs).]

4.2.4.3 Survey and Decontamination

The CRCFs shall be designed to have limited survey and decontamination systems for transportation casks and waste packages.

[10 CFR 20.1501(a) [DIRS 181962]. No significant levels of contamination are expected in the CRCFs. However, in the event that transportation casks or waste packages are surveyed and found to have surface contamination, decontamination shall be performed by the limited capability afforded in the facility. In conjunction with the Radiation/Radiological Monitoring System (See Chapter 28), the CRCFs shall provide a means to perform radiological analysis on samples (smears, air, process, etc) where equipment and material must be surveyed to show compliance with applicable limits prior to release from restricted areas. The process must be capable of detecting radioactive contamination levels below applicable limits.]

4.2.4.4 Segregation of Liquids

The CRCFs shall be designed to provide for the collection of liquids that may intrude into areas where contamination may be present, such as LLW.

[Although Scenario SI 628 in the Preliminary Hazards Analysis for License Application Study (BSC 2004 [DIRS 167313]) was written for the previous facilities, they would also reasonably apply to the current facilities. This reference will suffice until the analysis is revised. The development of drainage, piping, and other low-level radioactive collection design details will be developed during detailed design.]

4.2.4.5 MCO Handling Restrictions

The MCOs constitute the most restrictive handling scenario due to the need to keep lift heights (drop heights) to a very small distance (2-ft maximum).

[BCP YMP-2004-072 [DIRS 168721] Attachment A, # 21 provided a restriction on handling the MCO in the Fuel Handling Facility, which does not exist in the current suite of facilities. However, the MCO will be handled in the CRCFs, making this requirement applicable to the CRCFs. For the drop height requirement, BCP YMP-2004-072 makes the recommendation that "additional energy absorbing decking around all lift points to minimize the drop height may be possible." Although the decking was included in the BCP, it is a possible design solution, and as

such not appropriate for the requirement text.]

4.2.4.6 Transportation Cask Cavity Venting Equipment

Although gas sampling is not required within the Receipt Facility and CRCFs as undamaged casks are handled, the CRCFs will be capable of venting the transportation cask cavity to the off-gas (HVAC) system prior to cask lid removal. The transportation cask venting equipment must be designed for a maximum inlet gas temperature and pressure of 541^0F and 75 psig, respectively.

[Cask cavity annulus volumes vary depending on whether fuel is directly loaded or in canisters. In general, canistered casks have much lower annulus volumes than directly loaded casks. The specified temperature and pressure requirements are based on the maximum normal operating conditions for commercial SNF and excludes DOE and navy transportation casks. For ALARA considerations it is prudent to vent the cavity gas to an off-gas collection system, i.e., HVAC. Engineering Study Transportation Cask Gas Sampling Requirements Analysis, 000-30R-MGR0-02500-000-000 (BSC 2007 [DIRS 181530]) has determined the need for this requirement. See Table A-1 for more details. Although the study only requires gas-sampling in the WHF, project direction is to have the capability in each nuclear facility (Slovic 2007 [DIRS 184156]).]

4.3 Conformance Verification

Table 4-2 CRCFs Conformance Table

Criterion		Preliminary Verification Method					
Number	Description	N/A	Analysis	Exam	Demo	Review	Test
4.2.1.1	Direct Access					X	
4.2.1.2	Commercial Annual Receipt Rates		X				
4.2.1.3	Initial Waste Forms					X	
4.2.1.3.1	MCO Waste Forms					X	
4.2.1.3.2	DOE Standardized SNF Canister Waste Forms					X	
4.2.1.4	Annual Receipt Rates for DOE SNF and HLW		X				
4.2.1.5	Receive Transportation Casks					X	
4.2.1.6	Transportation Cask Return to Service					X	
4.2.1.6.1	DOE Cask Contamination					X	
4.2.1.7	Cask Turnaround Time					X	
4.2.1.8	TAD Canister					X	
4.2.1.9.1	Commercial SNF Under Contract	X					
4.2.1.9.2	DOE Generated SNF Disposable Canisters					X	
4.2.1.9.3	DOE SNF of Commercial Origin					X	
4.2.1.9.4	DOE SNF Canister Thermal Limit					X	
4.2.1.9.5	Deleted	--	--	--	--	--	--
4.2.1.9.6	Deleted	--	--	--	--	--	--
4.2.1.9.7	Deleted	--	--	--	--	--	--
4.2.1.9.8	Cladding Temperatures		X				
4.2.1.9.9	Lifting HLW Canisters					X	
4.2.1.9.10	HLW Canister Size					X	
4.2.1.9.11	HLW Canister Weight					X	
4.2.1.9.12	HLW Canister Grapple					X	
4.2.1.9.13	HLW Canister Drop Capability					X	
4.2.1.9.14	HLW Canister Thermal Limit		X				
4.2.1.9.15	Immobilized Plutonium Waste Form					X	
4.2.1.9.16	Tamper-Indicating Seal Removal	X					
4.2.1.9.17	Cask Sizes					X	
4.2.1.9.18	Cask Hook Weight						X
4.2.1.9.19	Rail Carrier Size					X	
4.2.1.9.20	Railroad Shipments					X	
4.2.1.9.21	Truck Dimensions					X	
4.2.1.9.22	Maximum Lift Height of Multi-Element Canisters					X	
4.2.1.9.23	Deleted	--	--	--	--	--	--
4.2.1.9.24	Canister Labels						X
4.2.1.9.25	Canister Lifting Fixture					X	
4.2.1.9.26	Remediation					X	
4.2.1.9.27	Canister Leak Rates					X	
4.2.1.10	Personnel Barriers					X	
4.2.1.11	Impact Limiters					X	
4.2.1.12	Hold-down Features					X	
4.2.1.13	Packaging Aged TAD Canisters					X	

Table 4-2 CRCFs Conformance Table (Continued)

Criterion		Preliminary Verification Method					
Number	Description	N/A	Analysis	Exam	Demo	Review	Test
4.2.2.1	Emergency Management					X	
4.2.2.2	Waste Package Preparation for Closure					X	
4.2.2.3	Service Life					X	
4.2.2.4	South Texas TAD Canister					X	
4.2.2.5	Not Used	--	--	--	--	--	--
4.2.2.6	Staging Capacity					X	
4.2.2.7	IICD Volume 1 Compliance					X	
4.2.2.7.1	Dimensions	X					
4.2.2.7.2	Transportation Cask Handling		X				
4.2.2.7.3	Skid Handling		X				
4.2.2.7.4	Disposable Canister Acceptance	X					
4.2.2.7.5	No Handling Canister Contents	X					
4.2.2.7.6	Canister Disposability Evaluations	X					
4.2.2.7.7	Deleted	--	--	--	--	--	--
4.2.2.7.8	Cask Responsibilities	X					
4.2.2.7.9	Deleted	--	--	--	--	--	--
4.2.2.7.10	Deleted	--	--	--	--	--	--
4.2.2.7.11	Standardized Canister Interfaces					X	
4.2.2.7.12	Hanford MCO					X	
4.2.2.7.13	Hanford MCO/Rack Interface					X	
4.2.2.7.14	Deleted	--	--	--	--	--	--
4.2.2.7.15	Deleted	--	--	--	--	--	--
4.2.2.7.16	Deleted	--	--	--	--	--	--
4.2.2.7.17	DWPF HLW Canister/Rack Interfaces					X	
4.2.2.7.18	Hanford HLW Canister/Rack Interface					X	
4.2.2.7.19	INL HLW Canisters					X	
4.2.2.7.20	WVDP HLW Canisters					X	
4.2.2.7.21	HLW Canisters					X	
4.2.2.7.22	Thermal Design of SSCs for the DOE Standardized Canisters					X	
4.2.2.7.23	Thermal Design of SSCs for MCO					X	
4.2.3.1.1	Structural Integrity					X	
4.2.3.1.2	Heliport Location		X				
4.2.3.1.3	Moderator Control					X	
4.2.3.1.4	TEV Rails inside the CRCFs					X	
4.2.3.1.5	Shield and Confinement Doors					X	
4.2.3.1.6	Slide Gates		X				
4.2.3.1.7	Cask Preparation Platform					X	
4.2.3.1.8	Waste Package Transfer Trolley Rails					X	
4.2.3.1.9	Non-ITS SSCs Interactions with ITS-SSCs					X	

Table 4-2 CRCFs Conformance Table (Continued)

Criterion		Preliminary Verification Method					
Number	Description	N/A	Analysis	Exam	Demo	Review	Test
4.2.3.2.1	Passive Fire Protection Features					X	
4.2.3.2.2	Automatic Fire Protection Features					X	
4.2.3.2.3	Manual Fire Protection Features					X	
4.2.3.2.4	Fire Resistant Materials					X	
4.2.3.2.5	Life Safety Provisions					X	
4.2.3.2.6	Occupant Notification					X	
4.2.3.3.1	Physical Protection					X	
4.2.3.3.2	Not Used	--	--	--	--	--	--
4.2.3.3.3	Access Controls					X	
4.2.3.3.4	Interior Intrusion Detection					X	
4.2.3.3.5	Loss of Control					X	
4.2.3.3.6	Physical Barriers					X	
4.2.3.3.7	Illumination					X	
4.2.3.3.8	Secure Storage					X	
4.2.4.1	Surveys and Inspections					X	
4.2.4.2	Deleted	--	--	--	--	--	--
4.2.4.3	Survey and Decontamination					X	
4.2.4.4	Segregation of Liquids					X	
4.2.4.5	MCO Handling Restrictions					X	
4.2.4.6	Transportation Cask Cavity Venting Equipment					X	

5 Wet Handling Facility

5.1 Overview

5.1.1 Introduction

The WHF and its accompanying systems receive truck-based and rail-based transportation casks containing bare commercial SNF and rail-based transportation casks containing dual-purpose canisters. The WHF will transfer the bare fuel contained in transportation casks and DPCs into TAD canisters and export the TAD canisters to either the Aging Facility or to the CRCFs.

The WHF provides space and layout to support cask processing, limited underwater fuel storage and blending capabilities, dual-purpose canister cutting and processing, TAD canister loading, TAD canister welding, and shielded transfer cask (STC) handling operations. TAD canister handling operations are primarily by means of the STC. The WHF allows remediation activities that include repair and rework of TADs, or space to safely segregate nonconforming items within the borated pool.

The WHF also helps maintain a suitable environment for personnel and equipment that supports the waste handling operations, helps protect the SSCs within the WHF from natural and induced environments, confines contaminants, and provides radiological protection to personnel.

In addition, the WHF also provides space and layout for industrial and radiological safety systems, operational control and monitoring, communications systems, safeguards and security systems, fire protection systems, ventilation systems, and utility systems. The WHF also provides the required space and layout for transportation cask and DPC cooling, TAD drying and inerting, maintenance, tool storage, and administrative support.

5.1.2 System Classification

The WHF has been classified as ITS because there are Category 2 event sequences that could occur in the WHF and features of the facility that prevent, reduce the frequency, or mitigate event sequences. The structure is ITS to maintain the waste form container integrity, building confinement integrity, and personnel shielding. The pool structure, TAD closure station, aging overpack access platform, DPC cutting station, preparation stations #1 and # 2, decontamination pit, decontamination pit seismic restraints, shield doors (including anchorages), confinement doors, cask port slide gate, and overpack port slide gate are ITS.

Rails for railcars, ALARA shielding features, boron makeup system, DPC unloading bay gate, deep remediation station, DPC transfer station, staging shelf transfer station, staging shelf dual transfer station, rail cask transfer station, STC/TAD transfer station, transportation cask transfer station, (pool) crush pads, decontamination pit cover, decontamination pit platform are non-ITS. The WHF does not include SSCs that are ITWI.

[Preclosure NSDB (BSC 2008 [DIRS 184200]), Appendix A, Table A-1 specifically provides the classification for the system SSCs and Appendix E, Table E-1 provides the functions.]

5.2 Functional and Performance Requirements and Bases

5.2.1 Mission Requirements

5.2.1.1 Direct Access

The WHF shall be designed to have direct rail and truck access to handle transportation casks for unloading into STCs or aging overpacks. In addition, the WHF shall have direct access for site transporters for delivery and export of aging overpacks and STCs.

[MGR-RD [DIRS 177491], Section 3.2.14.B. The current surface facilities and disposal container designs are preliminary, currently being developed only to evaluate whether a case can be made to safely operate and license a facility of this type. A definitive list of transporters and transportation systems to be received at the repository does not currently exist; transportation strategies are being developed for this future activity. It is currently thought that the site transporter will be truck or crawler based vehicles.]

5.2.1.1.1 Railroad Shipments

The WHF shall be designed to accommodate the maximum envelope for a loaded railroad transporter, which would be bounded by the dimensions specified in Table 1 of the IICD Volume 1 (DOE 2007 [DIRS 178792]), Figure C-1. The WHF shall be designed to to accommodate rail transportation cask shipments with the following characteristics.

1. Railroad shipments made under the AAR standard of unrestricted interchange.
2. The transportation cask system, including impact limiters, tie-downs, and other related transportation equipment, shall be compatible with AAR Plate F dimensions.
3. The combined railcar/cask carrier (gross railcar, cask, skid, and impact limiters) not exceeding 65,750 lbs gross weight per axle (e.g., 263,000 lbs gross weight for a 4-axle railcar, 394,500 lbs for a 6-axle railcar, or 526,000 lbs for an 8-axle railcar).
4. Cask railcars having a maximum width of 128 in.
5. Cask railcars having a maximum length of 90 ft.
6. Cask railcars having a coupler-to-coupler distance of 93 ft 4 in. (based on a review of rail industry rolling stock)

[IICD Volume 1 (DOE 2007 [DIRS 178792]), Section 7.3, Table 1, and Appendix C for the reference to Figure C-1. AAR 2004 [DIRS 169910] provides for a restricted interchange and Plate F. IICD Volume 2 (DOE 2007 [DIRS 176810]), Section 3.1.10 provides Items 4-6. Although IICD Volume 2 refers to a 1992 version of AAR, the repository will utilize AAR 2004.]

5.2.1.1.2 Truck Dimensions

The WHF shall be designed to receive truck-based transportation casks containing SNF and empty TAD canisters on trucks and trailers with the following maximum characteristics:

- LWT with the combined legal weight of the truck/cask carrier not exceeding a tandem axle gross weight of 34,000 lb and an overall gross weight of 80,000 lb.
- OWT with the combined weight of the truck/cask carrier being greater than 80,000 lbs gross vehicle weight, but not more than 90,000 to 105,000 lbs depending on the particular state transited.
- LWT or OWT flatbed trailers with a maximum width of 102 in.
- LWT or OWT flatbed trailers with a maximum length of 53 ft.

[IICD Volume 1 (DOE 2007 [DIRS 178792]), Figure B-1 provides information for LWT transportation system that are bounded by rail. IICD Volume 2 (DOE 2007 [DIRS 176810]), Section 3.1.10 provides trailer dimensions for the LWT and OWT. A state may not limit the length of a semitrailer in a truck tractor-semitrailer combination to less than 48 ft or less than a grandfathered length. Although the grandfathered length limit is 53 ft for the State of Nevada, approximately half of the remaining states limit trailer length to 48 ft. Repository auxiliary equipment and parking area interfaces are currently bounded by the repository designs for the potential generic building doors and setbacks and are not shown separately.]

5.2.1.1.3 Cask Sizes

The WHF shall be designed to receive rail-based transportation casks having dimensions shown in Table 5-1 and the TAD canister transportation overpack (not included in Table 5-1).

Table 5-1. Rail Transportation Cask Bounding Characteristics (Excluding the TAD Canister Transportation Overpack)

Characteristic	CSNF Design (Min-Max)	CSNF Purchasing (Min-Max)	Ref. Dim. [a]
Cask length without impact limiters (in.)	182-234	200-225	A
Cask diameter without impact limiters (in.)	40-108	44-98	C
Cask length with impact limiters (in.)	220-370	242-333	B
Cask diameter with impact limiters (in.)	65-144	72-140	F
Distance across upper trunnion (in.)	40-120	44-108	D
Cask closure lid diameter (in.)	20-88	22-79	E
Cask closure lid weight (lb)	<15,000	<15,000	--
Cask weight when fully loaded (lb)[b]	<280,000	<280,000	--
Impact limiter maximum weight, pair (lb)	25,000	25,000	--
Max height of the centerline of the upper cask trunnions above the floor or rail upon which the conveyance rests during upending and removal of cask from conveyance (in.)	296	330	--
Maximum distance between centerline of upper trunnions and top of cask (in.)	46	51	G
Maximum distance between centerline of lower trunnions and bottom of cask (in.)	51	56	H
Minimum available crane under-hook clearance (in.)[c]	480	480	--

[a] Letters in "Reference Dimension" column refer to the dimensions identified in Figure 5-1.

[b] Without impact limiters installed.

[c] Minimum distance from the facility floor surface to the palm of the crane hook at its maximum elevation

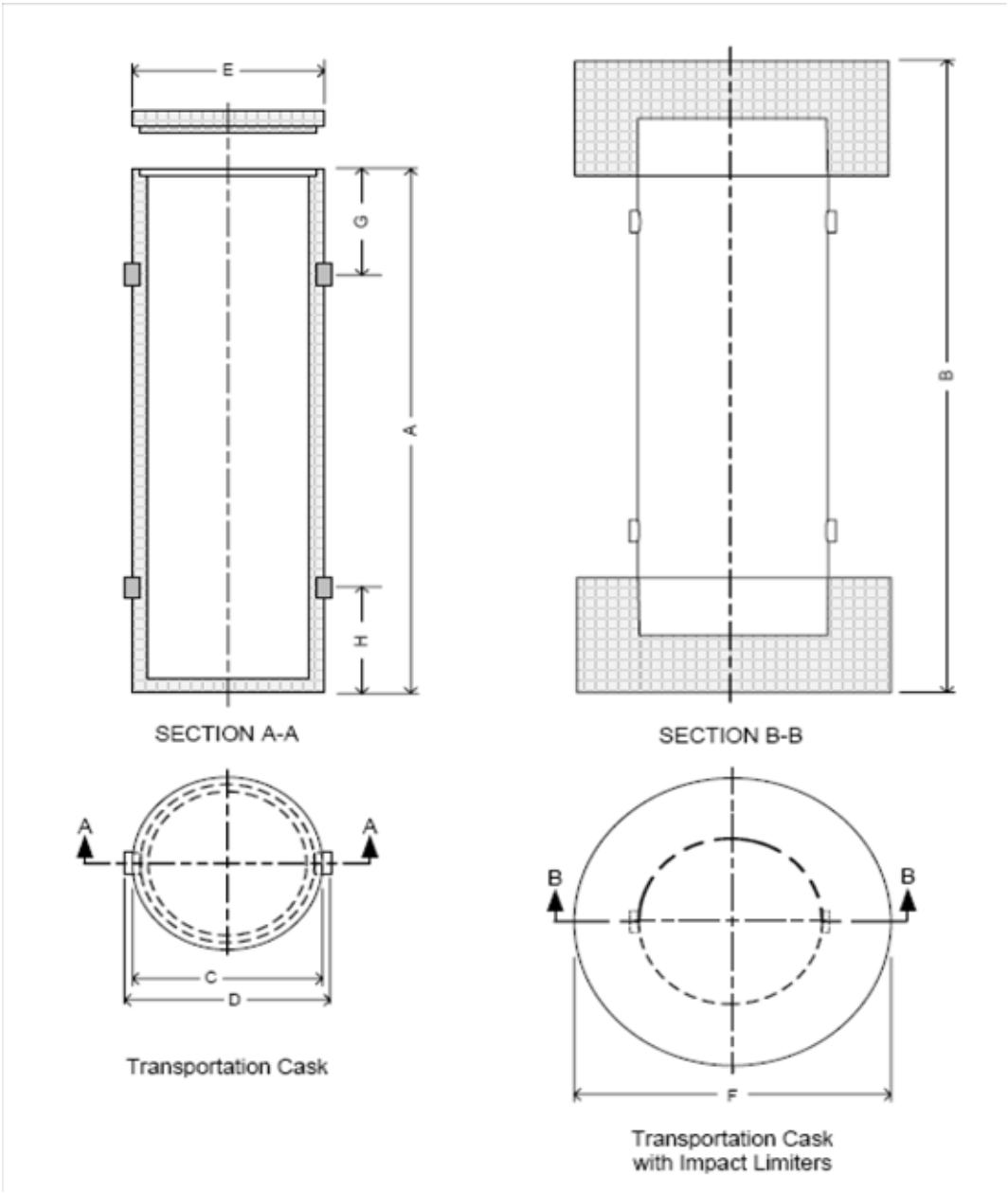

Figure 5-1. Generic Transportation Cask Illustrating the Location of Dimensions

[IICD Volume 2 (DOE 2007 [DIRS 176810]), Section 3.1.2.2 provides this information. Table 5-1 summarizes characteristics for rail cask designs for use in the CRWMS for the 10% of the CSNF that will not use the TAD canister transportation overpack. Truck casks are significantly smaller in size and weight than rail casks; thus, Table 5-1 bounds truck cask designs.]

5.2.1.1.4 Receive Transportation Casks

The WHF shall be designed to receive the following transportation cask designs (non-exclusively) (all must be certified by the NRC); handle the canisters and SNF; and manage the associated site-generated waste stream:

- GA-4
- GA-9
- NAC-LWT
- NAC-STC
- NAC-UMS
- MP-187 Multi-Purpose Cask (Not normal or expected event. Capability only)

- MP-197 Multi-Purpose Cask (Not normal or expected event. Capability only)
- HI-STAR 100
- TranStor TS-125
- TN-68 TSC
- TN-32
- TAD Transportation Cask

[TSRD (DOE 2006 [DIRS 181305]), Section 3.2.1.1c, identifies the transportation casks to be utilized in accordance with 10 CFR 71 [DIRS 181967]. MGR-RD [DIRS 177491], Section 3.1.2.C and CRD (DOE 2007 [DIRS 182960]), Section 3.2.1I and 3.2.1G (for the new text for waste stream). IICD Volume 2 (DOE 2007 [DIRS 176810]), Section 3.1.2 and Appendix B, Table B-1 provides the same cask list and adds TN-32 (which was not previously included in the list).

TN-68 Transportable Storage Cask (TSC) by Transnuclear, Inc.; Information on the TN-68 TSC is available in the Technical Information Center (TIC) 255262 -TN-68 Transport SAR Responses to RAI1 [E-17906, images 1-67]; TN-68 Transport Packaging Safety Analysis Report [Rev. 1] [Docket 71-9293][CDROM] [DIRS 167988]. The MP-197 cask was added to the list because it was developed and submitted to the NRC after DOE provided the initial TSRD list. The MP-187 handles one waste form and the MP-197 handles the other. The MP-197 is expected to have similar stature in future revisions of the TSRD. Although the TranStor TS-125 cask system (from BNFL Fuel Solutions, previously TranStor) may not be licensed by the NRC, it is included here as a surrogate for potential future cask designs.]

5.2.1.1.5 Transportation Cask Handling

The WHF shall receive transportation casks in a horizontal orientation, rotate the casks to a vertical orientation (either while still on their conveyance or after removal from the conveyance), and then handle the casks while in the vertical orientation. After removing the transportation cask from the conveyance, the vertical-handling concept includes moving and lifting transportation casks, removing waste forms from dual-purpose canisters (DPCs) or transportation casks, and loading into TADs.

The WHF shall receive transportation casks with uncanistered DOE SNF of commercial origin in a horizontal orientation, rotate the casks to a vertical orientation and then handle the casks while in the vertical orientation. The vertical-handling concept includes moving and lifting transportation casks; removing DOE-owned, commercial-origin fuels from transportation casks; and loading DOE-owned, commercial-origin fuel assemblies into TADs for subsequent placement into waste packages.

[IICD Volume 1 (DOE 2007 [DIRS 178792]), Assumptions 5.2.a. and 5.2.b.]

5.2.1.1.6 Skid Handling

The WHF shall be designed to handle rail or truck transportation systems directly. Although current surface facility concepts do not anticipate removal of any cask shipping skid, WHF design shall be capable of lifting the loaded package in its transportation configuration, including the skid and impact limiters, and transfer of the package from one conveyance to another. Truck casks will be delivered without handling skids. WHF handling equipment shall be designed to lift the skid with the following bounding characteristics.

- 124 in. maximum width
- 318 in. maximum length (between lift points)
- 360 in. maximum length (overall)
- 150 in. maximum height (to top of personnel barrier)
- Exactly 4 lifting points
- Liftable from below a maximum hook lift height of 42 ft above the rail

[IICD Volume 1 (DOE 2007 [DIRS 178792]), Assumption 5.3 and Section 7.4, which discusses transportation skids, no longer specifies skid handling. Potential interfaces, including generic buildings and gates at the WHF, are provided in the IICD. The Holtec International HI-STAR 100 transportation cask cannot be up-ended while on the handling skid fixed to the conveyance. This particular cask will either need to be handled by the intermodal skid or be removed from the skid in a horizontal orientation and placed on a separate, temporary skid. Once on the temporary skid, the impact limiters can be removed. The transportation cask must then be lifted horizontally and placed on an L-Frame, or similar device for up ending. Thus, while the skid may not be removed from the

conveyance for the HI-STAR 100, a separate skid and up ending device will be required. For more specific handling operations and information, see Chapter 7-Operating Procedures, in the Storage, Transport, and Repository Cask Systems, (Hi-Star Cask System) Safety Analysis Report, 10 CFR 71, Docket 71-9261 (Holtec International 2003 [DIRS 172633]). IICD Volume 2 (DOE 2007 [DIRS 176810]), Section 2 and 3.1.11.1 provides skid characteristics.]

5.2.1.1.7 Storage Cask Receipt Flexibility

The WHF design should be sufficiently flexible to allow these storage casks and canisters, that in the future may be certified by NRC for transport, so as not to preclude the ability to receive, handled, and process these casks or canisters:

- TN-BRP (transportation cask to be shipped one time)
- TN-REG (transportation cask to be shipped one time)
- TN-40
- TN-32
- Castor V/21
- Castor X/33
- NAC-128 S/T
- MC-10

[IICD Volume 2 (DOE 2007 [DIRS 176810]), Appendix B, Table B-3 provides the list of storage casks and dimensions. All of these casks are bare fuel storage casks and appropriate for the WHF. The other nuclear facilities are not allocated this criteria because of the bare fuel contents. Physical characteristics of these casks are provided in the IICD Table B-4.]

5.2.1.2 Annual Receipt Rates

The WHF shall be designed to be capable of receiving 230 MTHM/year of bare commercial SNF from LWT, OWT, and rail based bare fuel casks, as well as, 77 MTHM/year of CSNF in DPCs by rail. In the event that the DOE determines that rail access to the repository site will be unavailable to support system operating conditions and receipt rates, the previous acceptance rates will not apply and will, instead, be based on the availability of truck transportation capability.

[Although CRD (DOE 2007 [DIRS 182960]), Sections 3.2.1B and 3.2.1C.2 and MGR-RD [DIRS 177491], Sections 3.1.1.J and 3.1.1.K.2 dictate a repository receipt rate for no more than 10% of the commercial SNF will be received as bare, intact assemblies or other non-disposable canisters (e.g., dual-purpose canisters) (300 MTHM), both the WHF and the Receipt Facility are capable of handling portions of this non-TAD-canistered commercial SNF. Because both facilities are capable of handling a portion of this waste, the receipt rate requirement should be allocated appropriately between the facilities. Sections 2.1 and 5.5 of the Nuclear Facilities Receipt Rate Requirements Analysis Engineering Study (BSC 2007 [DIRS 181547]) provide the rationale for selecting these allocated receipt rate requirements. For the WHF DPC criteria, it is irrelevant whether the DPCs have a specific thermal output, as each TAD produced leaves the facility as a transfer - not being placed in a waste package within the WHF. Thermal outputs of the assemblies do not influence which SNF is allocated to the WHF, as the waste is loaded into TAD canisters and transferred to either a CRCFs or the Aging Facility for further processing - the WHF does not prepare the TAD canisters for emplacement (waste package). This information also meets IICD Volume 2 (DOE 2007 [DIRS 176810), Section 3.1.2.1 statements.]

5.2.1.3 Remediation and Assembly Handling

The WHF shall be designed to have one or more pools for wet remediation or handling of individual SNF assemblies. The pool shall accommodate opening of dual-purpose canisters or transportation casks without canisters, and transfer of individual SNF assemblies to TAD canisters.

[MGR-RD [DIRS 177491], Section 3.2.14.C. None of the other facilities are scoped to have a pool to be in line with the OCRWM, director's direction on clean facilities and TAD-based canister system. Although the DPCs are opened inside the pool, cutting is performed outside the pool.]

5.2.1.4 Opens DPCs

The WHF shall be designed to provide space to be capable of opening transportation casks to remove SNF, cut open TADs (for repair and remediation) and DPCs, handle the SNF, and manage the associated site-generated waste streams.

[CRD (DOE 2007 [DIRS 182960]), Section 3.2.1G and MGR-RD [DIRS 177491], Section 3.1.1.P. Although included in the source requirement text, HLW is not included in the WHF.]

5.2.1.5 Transportation Cask Return to Service

The WHF shall ensure that, after removal of their radioactive material, transportation casks meet the following criteria before being returned to the CRWMS transportation element:

- Conform to its Certificate of Compliance,
- Fissile material and fissile material packaging exemption requirements in 10 CFR 71.15(a)-(f) [DIRS 181967] and the requirements of 10 CFR 71, *Packaging and Transportation of Radioactive Material,*
- 49 CFR 172, *Hazardous Materials Table, Special Provisions, Hazardous Materials Communications, Emergency Response Information, and Training Requirements* [DIRS 184241] (including characterization to determine the constituents, total radioactivity, and chemical form in accordance with 49 CFR 172.203),
- 49 CFR 173, *Shippers--General Requirements for Shipments and Packagings* [DIRS 184242], for class 7 (radioactive) materials 173.401-173.477,
- Levels of non-fixed radioactive contamination on external surfaces shall be ALARA per 10 CFR 71.87(i). (Accessible external surfaces include the cask, impact limiters, personnel barrier, tie-down, transport frame, and transport vehicle.),
- Accumulations of 15 grams or more of fissile material shall be removed from the transportation casks,
- The interior of unloaded transportation casks shall be visually inspected prior to closure shall be free of debris and other foreign materials to the extent practical, comply with the appropriate transportation requirements, and
- Until modified by calculations or analyses, the combined gamma and neutron dose rate contribution from SNF measured at the basket top end plane over an open, unloaded transportation cask shall be no more than 35 mrem/hr without further evaluation of the fissile content limit of 49 CFR 173.453.

[MGR-RD [DIRS 177491], Section 3.1.2.A; IICD Volume 1 [DIRS 178792], Sections 9.2, 9.2.1, & 9.2.2; 10 CFR 71.15; PO&PR (BSC 2008 [DIRS 185008]), Sections 2.1.8, 2.1.9, and 2.1.10; and IICD Volume 2 (DOE 2007 [DIRS 176810]), Section 3.1.15. Even though there is a requirement that MGR will ensure that there is no more fissile material than is allowable under the requirements of 49 CFR 173.453(a) and there is less than 100 grams of spent fuel material and no extraneous material (other than fuel assembly crud) remaining in the cask interior, removing 15 grams or more of fissile material is the more conservative criterion. The WHF will be returning transportation casks to the transportation element. The other nuclear facilities are also allocated in this requirement. The parenthetical reference to 49 CFR 172.203 only applies to bare-fuel casks and is only applied to the WHF.]

5.2.1.5.1 DOE Cask Contamination

The WHF shall return DOE transportation casks to the transportation system meeting DOE surface contamination limits. The exterior and interior of the cask must not have removable contamination in excess of:

1. 22,000 dpm/100 cm^2 for non-fixed beta- and gamma-emitting radionuclide contamination
2. 2200 dpm/100 cm^2 for alpha-emitting radionuclides.

[IICD Volume 1 (DOE 2007 [DIRS 178792], Section 9.2.1]

5.2.1.6 Cask Turnaround Time

The WHF shall be designed for a target transportation cask turnaround time from receipt from the national transportation system to return to the national transportation system less than 7 days.

[PO&PR (BSC 2008 [DIRS 185008]), Section 2.1.3. This also applies to the other nuclear handling facilities.]

5.2.1.7 TAD Canister

The WHF shall be designed to handle the TAD canisters for transfer or loading, as provided by the *Transportation, Aging, and Disposal Canister System Performance Specification (DOE 2007 [DIRS 181403])*

[The MGR-RD [DIRS 177491], Section 3.1.2.F provide direction to include the TAD. The allocation to the WHF was provided in Criterion 2.2.1.11.]

5.2.1.7.1 TAD Canister Closure

The WHF shall prepare for and perform TAD closure or welding operations for those TAD canisters loaded within the facility. This includes moving the TAD canisters from transfer areas to sealing areas, as necessary.

[This criterion also partially satisfies PO&PR (BSC 2008 [DIRS 185008]), Sections 2.2.25 and 2.2.27.]

5.2.1.8 Cask Hook Weight

The WHF shall be designed for the maximum hook weight for any lift of the loaded rail cask not to exceed 400,000 lbs (including lifting features, personnel barriers, and impact limiters).

[TSRD (DOE 2006 [DIRS 181305]), Section 3.2.1.1.1. This value exceeds the casks weights allowed by IICD Volume 2 (DOE 2007 [DIRS 176810]), Section 3.1.13 (305,000 lbs in Criterion 5.2.1.1.3) and the 360,000 lbs specified in Transportation, Aging, and Disposal Canister System Performance Specification (DOE 2007 [DIRS 181403]), Section 3.2.]

5.2.1.9 Receive Bare Fuel and DPCs

The WHF shall be designed to receive truck and rail transportation casks containing bare commercial SNF and DPCs containing commercial SNF, and transfer the bare commercial SNF into TAD canisters.

[WASRD (DOE 2007 [DIRS 169992]), Section 4.1. This commercial SNF shall meet the requirements specified in 10 CFR 961 [DIRS 182678], as modified by individual Purchaser contracts. Commercial SNF may include both UO2 SNF and MOX SNF from commercial power reactors and SNF from privately owned commercial research reactors.]

5.2.1.10 Transportation Cask Thermal Limits

Transportation casks arriving with surface temperatures that exceed the WHF pool water temperature by more than 100°F, or other value specified by the cask vendor, shall be cooled prior to immersion for unloading or further in-pool processing.

[IICD Volume 2 (DOE 2007 [DIRS 176810]), Section 3.1.3 provides this information.]

5.2.1.11 DOE SNF of Commercial Origin

The WHF shall be designed to receive DOE SNF of commercial origin that cannot be handled by commercial BWR or PWR handling equipment or has known or suspected defects (to either structural components or to cladding beyond hairline cracks or pinhole leaks), such that the SNF requires isolation or special handling, and placed in a disposable canister.

[WASRD (DOE 2007 [DIRS 169992]), Section 4.2.3.D and 4.2.4 for limited amount of solid-form, bare DOE SNF. DOE SNF of commercial origin is only scoped to be received in the CRCFs because of the need to have defective SNF in disposable canisters, and the CRCFs will directly package those canisters. This is also allocated to the Receipt Facility in case this waste stream is received in TAD canisters and sent to aging.]

5.2.1.12 Deleted

[The requirements for DOE SNF disposable -canister design and materials have been removed from the WASRD (DOE 2007 [DIRS 169992]), Section 4.5.]

5.2.1.13 Deleted

[The requirements for disposable commercial-origin DOE SNF canister dimensional envelope materials have been removed from the WASRD (DOE 2007 [DIRS 169992]), Section 4.5.]

5.2.1.14 Deleted

[The requirements for disposable commercial-origin DOE SNF canister weight have been removed from the WASRD (DOE 2007 [DIRS 169992]), Section 4.5.]

5.2.1.15 Deleted

[The requirements for DOE SNF of commercial origin in non-disposable canisters have been removed from the WASRD (DOE 2007 [DIRS 169992]), Section 4.6]

5.2.1.16 Remediation

The WHF will include adequate space, tools, and radiation protection features (shielding, radiation monitors, HVAC confinement zones) to allow the repair and rework of TADs or space to safely segregate the nonconforming item until a resolution can be developed and implemented.

- Damaged canisters and SNF shall be inspected to determine the severity of damage.
- Nonconforming items shall be reworked, as appropriate, to meet waste package or TAD loading requirements.
- Nonconforming SNF shall be staged.
- Damaged sealed TAD canisters shall be vented, purged, and opened, as required.
- Once recovery from the off-normal condition has been completed, the SNF shall be returned to processes operations.
- Establish confinement within the repair or rework area prior to conducting repair or rework activities outside of the WHF pool area.

[The bullets are provided from PO&PR (BSC 2008 [DIRS 185008]), Sections 2.4.3, 2.4.4, 2.4.5, 2.4.7 and 2.4.8.]

5.2.1.17 Packaging CSNF in Aged Canisters

After CSNF is aged to an acceptable limit in a DPC in an aging overpack, it shall be removed from the DPC and loaded into a TAD canister, packaged in a WP, and emplaced.

[PO&PR (BSC 2008 [DIRS 185008]), Section 2.5.6 provides the basis for the aging pad capability.]

5.2.2 General Requirements

5.2.2.1 Fuel Types

The WHF shall be designed to provide space to accommodate commercial fuel assemblies from commercial SNF.

[(BSC 2007 [DIRS 181547]), Nuclear Facilities Receipt Rate Requirements Analysis Engineering Study, Section 2.1 and Characteristics of Commercial SNF Assemblies to be Disposed of at the MGDS (CRWMS M&O 1998 [DIRS 123570], pp. 11 to 14) and Qualification of Spent Nuclear Fuel Assembly Characteristics for Use as a Design Basis (CRWMS M&O 1995 [DIRS 102575], pp. 14, 16, and 18). While Qualification of Spent Nuclear Fuel Assembly Characteristics for Use as a Design Basis also provides a projection of SNF inventory, the projections from Characteristics of Commercial SNF Assemblies to be disposed of at the MGDS are favored since they are presented as an order of magnitude number in that analysis. Orders of magnitude are less susceptible to constantly changing projections (as additional information is gathered from reactor discharge data) yet provide basic information on the magnitude of the fuel that will be available for disposal at the repository.]

5.2.2.2 Service Life

The WHF shall be designed, constructed, and maintained and shall incorporate standard materials and practices appropriate for the specific building type facilitating a 50-year operational service life.

[This is a derived requirement from Criterion 2.2.2.7. BCP YMP-2006-053 [DIRS 177483], Block 11, Page 12 of 1159, #18 specifies the duration of the preclosure period for the surface facilities as 50 years.]

5.2.2.3 IICD Volume 1 Compliance

The WHF design shall comply with the agreements established under the IICD Volume 1 (DOE 2007 [DIRS 178792]) to ensure compatibility of DOE SNF waste forms with repository surface facility interfaces, including canister handling interfaces and compatibility between transportation equipment (e.g., transporters) and transported items (e.g., casks and canisters) with mechanical and envelope interfaces.

[CRD (DOE 2007 [DIRS 182960]), Section 3.2.1H as flowed down through the MGR-RD [DIRS 177491], Section 3.1.2.B.]

5.2.2.3.1 Dimensions

Dimensions for transporters and transportation system casks and canisters are measured at a temperature of 70ºF ± 8ºF unless otherwise specified.

[IICD Volume 1 (DOE 2007 [DIRS 178792]), Assumption 5.1. Many of the IICD figures contain measurements

that include tolerance stackups including for thermal expansion. Specific use of the temperature/tolerance stackups is only noted on the appropriate figures.]

5.2.2.3.2 Deleted

[This requirement was removed from the IICD Volume 1 (DOE 2007 [DIRS 178792]).]

5.2.2.3.3 Not Used

5.2.2.3.4 Deleted

[This requirement was removed from the IICD Volume 1 (DOE 2007 [DIRS 178792]).]

5.2.2.3.5 DOE SNF Acceptance

The WHF shall be designed to handle uncanistered DOE SNF accepted for management using the commercial origin receipt/disposal system, DPCs for DOE SNF of commercial-origin, and transportation system casks and canisters meeting CRWMS acceptance criteria. The WHF shall handle all non-disposable canisters of DOE-EM SNF and all uncanistered DOE SNF accepted for management using the commercial-origin receipt/disposal system.

[IICD Volume 1 (DOE 2007 [DIRS 178792]), Assumption 5.11.]

5.2.2.3.6 Not Used

5.2.2.3.7 Deleted

[This requirement was combined into Criterion 5.2.2.1.1.]

5.2.2.3.8 Cask Responsibilities

The WHF shall be designed to accommodate the transportation system for carrying DOE SNF to the repository, as specified in the IICD Volume 1 (DOE 2007 [DIRS 178792]), Figure B-4.

[IICD Volume 1 (DOE 2007 [DIRS 178792]), Section 9.1. The cask is the foundation of the transportation system for carrying SNF to the repository.]

5.2.2.3.9 Deleted

[This criterion for single-element canisters was deleted from the original source by IICD Volume 1 (DOE 2007 [DIRS 178792]).]

5.2.2.3.10 Personnel Barriers

The WHF shall provide for the removal or retraction of personnel barriers from around the cask while in the preparation areas.

[IICD Volume 1 (DOE 2007 [DIRS 178792]), Section 8.1. Although IICD Volume 2 (DOE 2007 [DIRS 176810]), Section 3.1.12 allows personnel barriers to be removed/reinstalled at the repository preliminary inspection area just inside security area, this does not negate the need for this nuclear facility capability. Personnel barriers are generally cages placed around the transportation system cask barrel and between the impact limiters to restrict personnel access to the cask surface. Personnel barriers will be included as part of the transportation system. Since personnel barrier details may not currently be available due to the stage of the current transportation system selection and design, interface parameters are not included at this time.]

5.2.2.3.11 Impact Limiters

The WHF shall provide for removal of impact limiters from the cask while in the preparation areas.

[IICD Volume 1 (DOE 2007 [DIRS 178792]), Section 8.2 and PO&PR (BSC 2008 [DIRS 185008]), Section 2.2.7. Impact limiters are energy-absorbing cylindrical, conical, or domed structures affixed at the ends of the transportation system casks during shipment. They will be included as part of the transportation system. Impact limiter details, such as fastener and lifting connections dimensions for transportation systems, may not currently be available. Since all impact limiter details are not currently available due to the stage of the current transportation system selection and design, interface parameters are not included at this time.]

5.2.2.3.12 Hold-down Features

The WHF shall provide for removal of the hold-down features while the cask is in the preparation areas.

[IICD Volume 1 (DOE 2007 [DIRS 178792]), Section 8.3 and PO&PR (BSC 2008 [DIRS 185008]), Section 2.2.7. Hold-down features are used to restrain the movement of the cask on the transportation system skid. They may consist of straps circling the cask body that are bolted to the skid or pillow blocks or clamps that are bolted around the cask trunnions. Strap type hold-down features restrain only vertical movement of the transportation cask on the skid and require additional features to restrain horizontal movement. Pillow block and clamp type hold-down features restrain vertical and horizontal movement of the transportation cask on the skid. Since hold-down feature details may not currently be available due to the stage of the current transportation system selection and design, interface parameters are not included at this time.]

5.2.2.3.13 Assembly Interfaces

DOE SNF of commercial-origin having handling features interchangeable with either BWR or PWR fuel assemblies and known to have no defects might be shipped to the repository as bare fuel within a transportation cask for placement in a TAD canister at the repository. The DOE SNF of commercial-origin might also be shipped to the repository within a disposable DOE standardized SNF canister. If the DOE SNF of commercial-origin is shipped as bare fuel, the transportation cask shall be sent to the WHF, where the SNF is removed from the cask and placed into a repository provided transportation, aging, and disposal (TAD) canister. The repository will be designed to load the following into TAD canisters:

- General Electric BWR/4
- Big Rock Point BWR (to be loaded into PWR TAD canisters)
- Westinghouse 15 × 15 PWR
- Ginna PWR
- Surry PWR
- Westinghouse 17 × 17 PWR
- Shippingport Core 2 PWR

[IICD Volume 1 (DOE 2007 [DIRS 178792]), Sections 12.1 and 12.2. The disposable DOE standardized canister interfaces with the repository have already been addressed (see Figures C-4 through C-14) of IICD. Figures C-27 and C-28 are included as placeholders for interface information between DOE SNF of commercial origin and the TAD canister. Figure C-27 will provide the interfaces between General Electric BWR/4 assemblies owned by DOE and the TAD canister. BWR fuel assembly interfaces shall encompass all assembly sizes except for Big Rock Point fuel assemblies. Figures C-28 provide the interfaces between Westinghouse PWR assemblies (e.g., 17 × 17) owned by DOE and the TAD canister. The PWR fuel assembly interfaces shall be shown for all DOE PWR assembly sizes. Specific interfaces for other DOE SNF assembly types have not been specified at this time. The IICD represents the interfaces with the waste package. The IICD has not been modified to represent the TAD canister interfaces. The clearances for the disposal container are considered to be applicable to the TAD canister. Assembly characteristics are in Characteristics of Potential Repository Wastes (DOE 2002 [DIRS 102588]). These assemblies do not constitute the entire list of commercial SNF to be received in the WHF, only the DOE-owned assemblies.]

5.2.3 Safety and Protection Requirements

5.2.3.1 NSDB Requirements

5.2.3.1.1 Structural Integrity

The WHF structure shall be designed to maintain building structural integrity to protect ITS SSCs inside the building from external events and protect against building collapse onto waste containers (safety functions).

- The mean frequency of building collapse of the WHF structure due to:
  - -- extreme winds less than or equal to 120 mph shall not exceed 1.0×10^{-06}/yr,
  - -- volcanic ashfall less than or equal to a roof live load of 21 lb/ft^2 shall not exceed 1.0×10^{-06}/yr.
  - -- the spectrum of seismic events shall be less than or equal to 2.0×10^{-06} /yr.

[Preclosure NSDB (BSC 2008 [DIRS 184200]), Appendix E, Table E-1, Items WH.01, WH.02, and WH.04.]

5.2.3.1.2 Heliport Location

The WHF structure shall be designed to maintain building structural integrity to protect ITS SSCs inside the building from external events (safety function).

- The WHF shall be located such that there is a distance of at least one-half mile between the WHF and the repository heliport.

[Preclosure NSDB (BSC 2008 [DIRS 184200]), Appendix E, Table E-1, Item WH.03.]

5.2.3.1.3 Moderator Controls

In conjunction with the fire detection and suppression systems, the WHF shall be designed to maintain moderator control (safety function).

- The mean probability of inadvertent introduction of water into a canister shall be less than or equal to:
  - -- 1.0×10^{-03} over a 720-hour period following the breach of a canister from sources other than fire suppression and
  - -- 1.0×10^{-06} over a 720-hour period following the breach of a cask-canister system from fire suppression.

[Preclosure NSDB (BSC 2008 [DIRS 184200]), Appendix E, Table E-1, Items WH.05 and FP.WH.01 and 02. This criterion also partially satisfies PO&PR (BSC 2008 [DIRS 185008]), Section 2.6.2.]

5.2.3.1.4 Pool Structure

The WHF pool structure shall be designed to maintain pool integrity to protect against collapse onto waste containers and to maintain pool water retention capability (safety functions).

- The mean frequency of collapse of, or water loss from, the WHF pool due to the spectrum of seismic events shall be less than or equal to 2.0×10^{-06}/yr.

[Preclosure NSDB (BSC 2008 [DIRS 184200]), Appendix E, Table E-1, Item WH.10.]

5.2.3.1.5 Shield and Confinement Doors

The WHF shield doors (including anchorages) and confinement doors shall be designed to protect against direct exposure of personnel, preclude collapse onto waste containers, and mitigate the consequences of radionuclide release (safety functions).

- Equipment shield doors shall have a mean probability of inadvertent opening of less than or equal to 2.0×10^{-06} per waste container handled.
- Equipment shield doors shall be designed to preclude falling onto a waste container as a result of impact from a conveyance.
- The mean probability that the HVAC system in the WHF confinement areas becomes unavailable during a 30-day mission time following a radiological release due to the simultaneous opening of any two or more doors that are either (a) equipment confinement doors or (b) equipment shield doors with a confinement function shall be less than or equal to 3.0×10^{-07}.
- The mean frequency of collapse of equipment shield doors (including attachment of door to wall and frame anchorages) due to the spectrum of seismic events shall be less than or equal to 6.0×10^{-06}/yr.

[Preclosure NSDB (BSC 2008 [DIRS 184200]), Appendix E, Table E-1, Items WH.06 through 09.]

5.2.3.1.6 Slide Gates

The cask port slide gate and overpack port slide gate shall be designed to protect against dropping a canister due to a spurious closure of the slide gate, protect against direct exposure of personnel, and preclude breach of the canister due to a spurious closure of the slide gate onto the canister (safety function).

- The mean probability of a canister drop resulting from a spurious closure of the slide gate shall be less than or equal to 5.0×10^{-06} per transfer.
- The mean probability of occurrence of an inadvertent opening of a slide gate shall be less than or equal to 4.0×10^{-09} per transfer.
- Closure of the slide gate shall be incapable of breaching a canister.

[Preclosure NSDB (BSC 2008 [DIRS 184200]), Appendix E, Table E-1, Items WH.HTC.01 through 06.]

5.2.3.1.7 Preparation Stations

Preparation Stations #1 and #2 shall be designed to protect against platform collapse onto a waste container. Preparation Station #1 shall also be designed to protect against platform collapse or waste container breach due to an impact of the cask transfer trolley (safety function).

- The mean frequency of collapse of either preparation station platform due to the spectrum of seismic events shall be less than or equal to 3.0×10^{-06}/yr.
- The mean frequency of Preparation Station #1 platform collapse or waste container breach from impact of the cask transfer trolley onto the platform due to the spectrum of seismic events shall be less than or equal to 2.0×10^{-05}/yr.

[Preclosure NSDB (BSC 2008 [DIRS 184200]) Appendix E, Table E-1, Items WH.HMH.01 through 03.]

5.2.3.1.8 Aging Overpack Access Platform

The aging overpack access platform shall be designed to protect against platform collapse onto a waste container and protect against platform collapse or waste container breach due to an impact from the site transporter (safety functions).

- The mean frequency of collapse of the aging overpack access platform due to the spectrum of seismic events shall be less than or equal to 3.0×10^{-06}/yr.
- The mean frequency of aging overpack access platform or waste container breach from impact of the site transporter onto the platform due to the spectrum of seismic events shall be less than or equal to 2.0×10^{-05}/yr.

[Preclosure NSDB (BSC 2008 [DIRS 184200]), Appendix E, Table E-1, Items WH.HAC.01 and 02.]

5.2.3.1.9 TAD Closure Station Platform

The TAD closure station shall be designed to protect against platform collapse onto a waste container(safety function).

- The mean frequency of collapse of the TAD closure station platform due to the spectrum of seismic events shall be less than or equal to 3.0×10^{-06}/yr.

[Preclosure NSDB (BSC 2008 [DIRS 184200]) Appendix E, Table E-1, Item WH.HC.01.]

5.2.3.1.10 DPC Cutting Station Platform

The DPC cutting station shall be designed to protect against platform collapse onto a waste container(safety function).

- The mean frequency of collapse of the DPC cutting station platform due to the spectrum of seismic events shall be less than or equal to 3.0×10^{-06}/yr.

[Preclosure NSDB (BSC 2008 [DIRS 184200]), Appendix E, Table E-1, Item WH.HD.01.]

5.2.3.1.11 Decontamination Pit and Its Seismic Restraints

The decontamination pit and its seismic restraints shall be designed to provide lateral stability to the cask in the decontamination pit (safety function).

- The mean frequency of the failure of the seismic restraints in the decontamination pit due to the spectrum of seismic events shall be less than or equal to 2.0×10^{-05}/yr.

[Preclosure NSDB (BSC 2008 [DIRS 184200]), Appendix E, Table E-1, Item WH.HM.01.]

5.2.3.1.12 Non-ITS SSCs Interactions with ITS SSCs

The WHF shall be designed such that interactions between non-ITS SSCs and ITS SSCs that upon failure could prevent safety functions from being performed:

- have a probability of failure of less that 1×10^{-04} over the preclosure period (as determined by PCSA),
- will not damage the ITS component if not screened out, or
- damage to the ITS SSC does not result in a doses in excess of the 10 CFR 63.111 [DIRS 180319] performance standard (as determined by PCSA).

The design of the interface shall include the dynamic loads and displacements produced by both sets of SSCs up to the first anchor point beyond the interaction. Additionally, either:

- The collapse of the non-ITS SSC shall not cause it to strike an ITS SSC,
- The collapse of the non-ITS SSC shall not impair the integrity of the ITS SSC, or
- The non-ITS SSC shall be analyzed and designed to the same seismic DBGM as the ITS SSCs subjected to the potential unacceptable interaction.

Acceptable methods of isolating each non-ITS SSC with an adverse interaction include constraints, barriers, or relocation of the non-ITS SSC.

[The wording paraphrases in NUREG-0800, Section 3.7.2, subsection II.8 (NRC 1989 [DIRS 165111]). The discussion of isolation and anchor point boundary for the design is from NUREG-0800, Section 3.7.3, subsection II.8 (NRC 1989 [DIRS 165112]). Although the NUREG is not directly applicable to the repository as it is not a reactor plant, the repository does have both non-ITS and ITS SSCs that should have the same design considerations of the interactions. The specific criterion is contained in the PDC (BSC 2007 [DIRS 179641), Section 6.1.10.2, for any non-ITS/ITS interactions. This requirement is commonly called the two-over-one requirement.]

5.2.3.1.13 Loose Radioactive Materials

Loose radioactive materials (such as fuel debris) resulting from the handling of SNF assemblies shall be managed in accordance with 10 CFR 20 [DIRS 181962], 10 CFR 72 [DIRS 181968], and 10 CFR 73 [DIRS 181969].

[This requirement is required to ensure that loose radioactive materials resulting from operations are managed per federal regulation for disposition. Examples of loose radioactive materials are residual SNF debris in transportation casks that are removed as necessary, pieces of SNF that result from handling due to lack of fuel element integrity, SNF debris remaining after remediation operations, SNF debris in the remediation pool and its water handling systems, and any other HLW not contained in fuel elements or canisters that occurs as a result of normal, off-normal, or event sequences. There should be no instance in which transportation cask internals would need to be decontaminated (beyond the removal of loose 'particles' of fissile material) as some degree of contamination will be present and that the transportation casks will be reutilized.]

5.2.3.2 Fire Protection Requirements

5.2.3.2.1 Passive Fire Protection Features

The WHF shall be provided throughout with passive fire protection in the form of fire rated barriers, as determined in the FHA.

[Wet Handling Facility Fire Hazard Analysis (BSC 2008 [DIRS 185028]), Section 7.1.3.]

5.2.3.2.2 Automatic Fire Protection Features

The WHF shall be provided throughout with automatic fire suppression and automatic fire alarm and detection systems, as determined in the FHA.

[Wet Handling Facility Fire Hazard Analysis (BSC 2008 [DIRS 185028]), Section 7.1.1.]

5.2.3.2.3 Manual Fire Protection Features

The WHF shall be provided throughout with portable fire extinguishers, Class III standpipe systems, and manual fire alarm initiation devices, as determined in the FHA.

[Wet Handling Facility Fire Hazard Analysis(BSC 2008 [DIRS 185028]), Section 7.1.2. Additionally, Regulatory Guide 1.189 [DIRS 155040], Section 3.4.1 provides for "Interior manual hose installation should be able to reach any location that contains, or could present a fire exposure hazard to, equipment important to safety with at least one effective hose stream" and specifies Class III standpipes to accomplish the design.]

5.2.3.2.4 Fire Resistant Materials

The WHF shall be designed such that: electrical cabling and other exposed materials meet flame spread and other related requirements; and equipment installed within the facility utilize non-combustible lubricants and hydraulic fluids to the maximum extent practicable, as determined in the FHA. Vehicles entering the facility shall be limited to 100 gallons of diesel fuel per vehicle.

[Wet Handling Facility Fire Hazard Analysis (BSC 2008 [DIRS 185028]), Section 7.1.3.]

5.2.3.2.5 Life Safety Provisions

The WHF shall be designed to meet life safety provisions such as means of egress, emergency lighting, and other features, as determined in the FHA.

[Wet Handling Facility Fire Hazard Analysis (BSC 2008 [DIRS 185028]), Section 7.1.4.]

5.2.3.2.6 Occupant Notification

Local fire alarm occupant notification shall be provided throughout the entire facility originating the alarm. A fire zone alarm panel or graphic zone alarm panel shall be provided at the main entrance to major facilities. A manual fire notification method, such as manual fire alarm initiation devices, shall be provided at all normally occupied facilities.

[DOE O 420.1A [DIRS 159450], Contractor Requirement 4.2.2.6. The alarm panel transmits trouble, supervisory, and alarm signals to the Central Control Center and Fire, Rescue and Medical Facility for appropriate response.]

5.2.3.3 Security Requirements

5.2.3.3.1 Physical Protection

Appropriate delays at doors and other access points, defensive positions, and mechanical controls on material movement in the canister handling area shall be included in the design.

[DOE M 470.4-2 [DIRS 178562], Chapter VIII.2 specifies that appropriate safeguard and security measures are implemented to protect the special nuclear materials (SNM) that are handled in the WHF. This requirement is applicable to the nuclear handling facilities, Subsurface Facility, BOP, and S&S system.]

5.2.3.3.2 Access Controls

The WHF shall be designed to have access controls to allow access only those individuals who are authorized to enter the facility.

[10 CFR 73.51(b)(2)(ii) [DIRS 181969]. DOE M 470.4-2 [DIRS 178562], Chapter VIII.2 specifies access controls for areas, including the WHF. This requirement is applicable to the nuclear facilities, Subsurface Facility, BOP, and Safeguards and Security System.]

5.2.3.3.3 Interior Intrusion Detection

The WHF shall be designed to have interior intrusion detection to detect and assess unauthorized activities within the facility. The WHF shall use IDS and/or provide remote visual observations to ensure breaches in the security area boundaries for those S&S interests under IDS protection are detected and alarms are annunciated.

[10 CFR 73.51(b)(2)(iii) and (d)(3)[DIRS 181969] provides for the base requirement. DOE M 470.4-2 [DIRS 178562], Chapter VII. 2.b provides additional text for visual observations. This requirement is applicable to the nuclear facilities, Subsurface Facility, BOP, and Safeguards and Security System.]

5.2.3.3.4 Loss of Control

The WHF physical protection system shall be designed to protect against loss of control of the facility that could be sufficient to cause a radiation exposure exceeding the dose described in 10 CFR 72.106 (b) [DIRS 181968].

[10 CFR 73.51(b)(3) [DIRS 181969]. This requirement is applicable to the nuclear facilities, Subsurface Facility, BOP, and Safeguards and Security System.]

5.2.3.3.5 Physical Barriers

The WHF building walls shall provide the second physical barrier for the storage of SNF by offering substantial penetration resistance to control, deny, impede, or delay unauthorized access.

[10 CFR 73.51(d)(1) [DIRS 181969] and DOE M 470.4-2 [DIRS 178562], Chapter IX.4 through IX.8. This requirement is applicable to the nuclear facilities, Subsurface Facility, BOP, and Safeguards and Security System.]

5.2.3.3.6 Illumination

The WHF shall be designed to provide for illumination, sufficient to permit adequate assessment of unauthorized penetrations of, or activities within, the facility and surrounding area.

[10 CFR 73.51(d)(2) [DIRS 181969]. This requirement is applicable to the nuclear facilities, Subsurface Facility, BOP, and Safeguards and Security System.]

5.2.3.3.7 Secure Storage

The WHF shall store S&S interests requiring secure storage in vaults, vault-type rooms, vault-type-room complexes, and/or GSA approved security containers.

[DOE M 470.4-2 [DIRS 178562], Chapter XI.1.a. This requirement is applicable to the nuclear facilities, Subsurface Facility, BOP, and Safeguards and Security System.]

5.2.3.4 Emergency Management

The WHF shall provide for an operations room or area that shall be capable of conducting emergency management functions for events sequence recovery within the facility.

[RGA REG-CRW-RG-000455 (BSC 2007 [DIRS 184409]), Section 1.2 provided an agreement that an area within the nuclear facility shall perform the appropriate functions of control rooms when activated for emergency management activities. Other facilities including the CCC, the on-site EOC in the Administration Facility, and the off-site EOF have primary responsibility for managing emergencies.]

5.2.4 Miscellaneous Requirements

5.2.4.1 Surveys and Inspections

The WHF shall support performing radiological surveys and security inspections of the transportation cask subsystems.

[PO&PR (BSC 2008 [DIRS 185008]), Section 2.1.9.]

5.2.4.2 Burn up Measurement Equipment

The design of the repository shall not exclude the ability to add burn up measurement equipment for CSNF assemblies. The location of the burn up equipment, if installed, shall be compatible with transfer operations and shall be inside the transfer area.

[PO&PR (BSC 2008 [DIRS 185008]), Section 2.2.26. This is allocated to only the WHF, since it is the only facility to handle the bare fuel. This is not allocated to the processing system as no equipment is required at this time.]

5.2.4.3 Decontamination System

The WHF shall have decontamination systems for transportation casks, STC, and aging overpacks. In the event that transportation casks, STC, or aging overpacks are found to have surface contamination, decontamination shall be performed by the limited capability afforded in the facility.

[PO&PR (BSC 2008 [DIRS 185008]), Section 2.1.9. This function is also necessary in the current suite of nuclear handling facilities.]

5.2.4.4 Segregation of Liquids

The WHF shall be designed to provide for the collection of liquids that may intrude into areas where contamination may be present, such as LLW.

[Preliminary Hazards Analysis for License Application Study (BSC 2004 [DIRS 167313]), Scenario SI 628 was written for the previous facilities, they would also reasonably apply to the current facilities. This reference will suffice until the analysis is revised. The development of drainage, piping and other low level radioactive collection design details will be developed during detailed design.]

5.2.4.5 Deleted

[This requirement was combined into Criterion 5.2.1.5.]

5.2.4.6 Staging of Assemblies

The WHF shall provide for a minimum staging capacity of 48 PWR commercial SNF assemblies and 72 BWR commercial SNF assemblies.

[BCP YMP-2006-053 [DIRS 177483], Block 11, Page 12 of 1159, provides the requirement to stage assemblies. DOE/RW-0600 [DIRS 167367], Table I, 1.5.04.01.02 Design Solutions 2,was cancelled. This text for BWR and PWR is still appropriate for the WHF. DOE canisters will be processed through the CRCFs and not the WHF. Therefore, DOE canister staging is only provided by the CRCFs.]

5.2.4.7 Transportation Cask and DPC Cavity Sampling

The WHF shall be capable of sampling the internal cavity gases within all bare-fuel transportation casks. The cask cavity shall be sampled and evacuated to HVAC system prior to cask lid removal. The WHF shall also be capable of sampling the DPC internal cavity. If combustible gases are present in the sample, the DPC must be purged until samples show a level below lower explosive limit. Details regarding identification, precautions, controls, and limits for flammable and radioactive gases shall be identified and documented.

[Bare-fuel casks do not have a canister barrier to contain gases. Therefore, for ALARA considerations it is prudent to sample the cavity gas to evaluate whether damage has occurred that would potentially make problems for releases before releasing the cavity gas to the HVAC system. Because the bare-fuel casks do not have a canister barrier to contain gases they, have a substantial volume to sample. Details of the DPC internal gas volumes, the size and type of vent connection, the internal temperature and pressure etc., are not available at this time. Engineering Study Transportation Cask Gas Sampling Requirements Analysis (BSC 2007 [DIRS 181530]) has determined the need for this requirement. This criterion meets PO&PR (BSC 2008 [DIRS 185008]), Sections 2.2.13, 2.2.14, 2.2.15, 2.2.16, 2.2.17, and 2.2.18.]

5.2.4.8 Cask Cavity Sampling Equipment

The transportation cask cavity sampling and vent equipment located in the WHF must be designed for a maximum inlet gas temperature and pressure of 541°F and 75 psig respectively. Sampling equipment must be capable of drawing the sample off as little as 3.15 cubic feet cavity volume.

[The specified temperature and pressure requirements are based on the maximum normal operating conditions for commercial SNF and excludes DOE and Navy transportation casks. Cask cavity annulus volumes vary depending on whether fuel is directly loaded or in canisters. In general, canistered casks have much lower annulus volumes than directly loaded casks. For more details, see Engineering Study Transportation Cask Gas Sampling Requirements Analysis (BSC 2007 [DIRS 181530]), Table 1.]

5.2.4.9 Cask Annulus Sampling

The WHF shall provide capability to sample the annulus gas of canister-based transportation systems for cases of suspected accidents and delays in shipment. The cask cavity shall be sampled and evacuated to the HVAC system prior to cask lid removal.

[10 CFR 71.35(c) [DIRS 181967] requires that any application for fissile material shipment must include special controls and precautions for transport, loading, unloading, and handling and any proposed special controls in case of an accident or delay. Engineering Study Transportation Cask Gas Sampling Requirements Analysis (BSC 2007 [DIRS 181530]) has determined the need for this requirement.]

5.3 Conformance Verification

Table 5-2 WHF Conformance Verification

Criterion		Preliminary Verification Method					
Number	Description	N/A	Analysis	Exam	Demo	Review	Test
5.2.1.1	Direct Access					X	
5.2.1.1.1	Railroad Shipments					X	
5.2.1.1.2	Truck Dimensions					X	
5.2.1.1.3	Cask Sizes					X	
5.2.1.1.4	Receive Transportation Casks					X	
5.2.1.1.5	Transportation Cask Handling					X	
5.2.1.1.6	Skid Handling					X	
5.2.1.1.7	Storage Cask Receipt Flexibility					X	
5.2.1.2	Annual Receipt Rates		X				
5.2.1.3	Remediation and Assembly Handling					X	
5.2.1.4	Opens DPCs					X	
5.2.1.5	Transportation Cask Return to Service					X	
5.2.1.5.1	DOE Cask Contamination					X	
5.2.1.6	Cask Turnaround Time		X				
5.2.1.7	TAD Canister	X					
5.2.1.7.1	Tad Canister Closure					X	
5.2.1.8	Cask Hook Weight						X
5.2.1.9	Receive Bare Fuel and DPCs					X	
5.2.1.10	Transportation Cask Thermal Limits					X	
5.2.1.11	DOE SNF of Commercial Origin					X	
5.2.1.12	Deleted	--	--	--	--	--	--
5.2.1.13	Deleted	--	--	--	--	--	--
5.2.1.14	Deleted	--	--	--	--	--	--
5.2.1.15	Deleted	--	--	--	--	--	--
5.2.1.16	Remediation					X	
5.2.1.17	Packaging CSNF in Aged Canisters					X	
5.2.2.1	Fuel Types					X	
5.2.2.2	Service Life					X	
5.2.2.3	IICD Volume 1 Compliance					X	
5.2.2.3.1	Dimensions	X					
5.2.2.3.2	Deleted	--	--	--	--	--	--
5.2.2.3.3	Not Used	--	--	--	--	--	--
5.2.2.3.4	Deleted	--	--	--	--	--	--
5.2.2.3.5	DOE SNF Acceptance					X	
5.2.2.3.6	Not Used	--	--	--	--	--	--
5.2.2.3.7	Deleted	--	--	--	--	--	--
5.2.2.3.8	Cask Responsibilities	X					
5.2.2.3.9	Deleted	--	--	--	--	--	--
5.2.2.3.10	Personnel Barriers					X	
5.2.2.3.11	Impact Limiters					X	
5.2.2.3.12	Hold-down Features					X	
5.2.2.3.13	Assembly Interfaces					X	
5.2.3.1.1	Structural Integrity					X	
5.2.3.1.2	Heliport Location		X				

Table 5-12 WHF Conformance Verification (Continued)

Criterion		Preliminary Verification Method					
Number	Description	N/A	Analysis	Exam	Demo	Review	Test
5.2.3.1.3	Moderator Controls					X	
5.2.3.1.4	Pool Structure					X	
5.2.3.1.5	Shield and Confinement Doors		X				
5.2.3.1.6	Slide Gates		X				
5.2.3.1.7	Preparation Stations					X	
5.2.3.1.8	AO Access Platform		X				
5.2.3.1.9	Tad Closure Station Platform					X	
5.2.3.1.10	DPC Cutting Station Platform					X	
5.2.3.1.11	Decontamination Pit and its Seismic Restraints					X	
5.2.3.1.12	Non-ITS SSCs Interactions with ITS SSCs		X				
5.2.3.1.13	Loose Radioactive Materials					X	
5.2.3.2.1	Passive Fire Protection Features					X	
5.2.3.2.2	Automatic Fire Protection Features					X	
5.2.3.2.3	Manual Fire Protection Features					X	
5.2.3.2.4	Fire Resistant Materials					X	
5.2.3.2.5	Life Safety Provisions					X	
5.2.3.2.6	Occupant Notification					X	
5.2.3.2.7	Deleted	--	--	--	--	--	--
5.2.3.3.1	Physical Protection					X	
5.2.3.3.2	Access Controls					X	
5.2.3.3.3	Interior Intrusion Detection					X	
5.2.3.3.4	Loss of Control					X	
5.2.3.3.5	Physical Barriers					X	
5.2.3.3.6	Illumination						X
5.2.3.3.7	Secure Storage					X	
5.2.3.4	Emergency Management					X	
5.2.4.1	Surveys and Inspections					X	
5.2.4.2	Burn Up Measurement Equipment					X	
5.2.4.3	Decontamination System					X	
5.2.4.4	Segregation of Liquids					X	
5.2.4.5	Deleted	--	--	--	--	--	--
5.2.4.6	Staging of Assemblies					X	
5.2.4.7	Transportation Cask and DPC Cavity Sampling					X	
5.2.4.8	Cask Cavity Sampling Equipment					X	
5.2.4.9	Cask Annulus Sampling					X	

6 Receipt Facility

6.1 Overview

6.1.1 Introduction

The Receipt Facility will receive rail-based transportation casks loaded with TAD canisters or DPCs, open the casks, remove the canisters, and transfer them into aging overpacks for delivery to the WHF, CRCFs or the Aging Facility. Once the canisters are removed, the transportation cask is restored and returned to the National Transportation System.

The Receipt Facility will only conduct simple crane and canister transfer machine (CTM) operations to transfer canisters. The Receipt Facility will only perform mechanical closure of aging overpacks as no welding is required for closure of these systems.

The Receipt Facility provides space and layout to support rail-based transportation cask processing, aging overpack loading and aging overpack transport equipment. The Receipt Facility also helps maintain a suitable environment for personnel and equipment that supports the waste handling operations; helps protect the SSCs within the Receipt Facility from natural and induced environments; confines contaminants; provides radiological protection to personnel.

The Receipt Facility also provides space for cask tractor and cask trailer to prep and receive the NUHOMS transportation cask.

In addition, Receipt Facility provides space and layout for industrial and radiological safety systems; limited operational control and monitoring, safeguards and security systems, fire protection systems, ventilation systems, and utility systems. The Receipt Facility also provides the required space and layout for maintenance and administrative support, if required.

6.1.2 System Classification

The Receipt Facility has been classified as ITS because there are Category 2 event sequences that could occur in the Receipt Facility and there are features of the facility to prevent, reduce the frequency of, or mitigate event sequences. The structure is ITS because it maintains the waste form container integrity, building confinement integrity, and personnel shielding. The shield doors (including anchorages), confinement doors, cask port slide gate, aging overpack port slide gate, cask preparation platform and lid bolting room platform are ITS.

The rails for railcars and ALARA shielding features are non-ITS. The Receipt Facility does not include SSCs that are ITWI.

[Preclosure NSDB (BSC 2008 [DIRS 184200]), Appendix A, Table A-1 specifically provides the classification for the system SSCs and Appendix C, Table C-1 provides the functions.]

6.2 Functional and Performance Requirements And Bases

6.2.1 Mission Requirements

6.2.1.1 Direct Access

The Receipt Facility shall be designed to have direct rail access to handle rail-based transportation casks for unloading into aging overpacks.

[MGR-RD [DIRS 177491], Section 3.2.14.B.]

6.2.1.1.1 Railroad Shipments

The Receipt Facility shall be designed to accommodate rail transportation cask shipments with the following characteristics.

1. Railroad shipments made under the AAR standard of unrestricted interchange.
2. The transportation cask system, including impact limiters, tie-downs, and other related transportation equipment, shall be compatible with AAR Plate F dimensions.

3. The combined railcar/cask carrier (gross railcar, cask, skid, and impact limiters) not exceeding 65,750 lbs gross weight per axle (e.g., 263,000 lbs gross weight for a 4-axle railcar, 394,500 lbs for a 6-axle railcar, or 526,000 lbs for an 8-axle railcar).
4. Cask railcars having a maximum width of 128 in.
5. Cask railcars having a maximum length of 90 ft.
6. Cask railcars having a coupler-to-coupler distance of 93 ft 4 in. (based on a review of rail industry rolling stock).

[AAR 2004 [DIRS 169910] provides for a restricted interchange, Plate F, and weights per axle in Items 1-3. IICD Volume 2 (DOE 2007 [DIRS 176810]), Section 3.1.10 provides Items 4-6. Although IICD Volume 2 refers to a 1992 version of AAR, the repository will utilize AAR 2004. Truck shipments are not planned for receipt in this facility.]

6.2.1.1.2 Cask Sizes

The Receipt Facility shall be designed to receive rail-based transportation casks having dimensions shown in Table 6-1 and the TAD canister transportation overpack (not included in Table 6-1).

Table 6-1. Rail Transportation Cask Bounding Characteristics (Excluding the TAD Canister Transportation Overpack)

Characteristic	CSNF Design (Min-Max)	CSNF Purchasing (Min-Max)	Ref. Dim. [a]
Cask length without impact limiters (in.)	182-234	200-225	A
Cask diameter without impact limiters (in.)	40-108	44-98	C
Cask length with impact limiters (in.)	220-370	242-333	B
Cask diameter with impact limiters (in.)	65-144	72-140	F
Distance across upper trunnion (in.)	40-120	44-108	D
Cask closure lid diameter (in.)	20-88	22-79	E
Cask closure lid weight (lb)	<15,000	<15,000	--
Cask weight when fully loaded (lb)[b]	<280,000	<280,000	--
Impact limiter maximum weight, pair (lb)	25,000	25,000	--
Max height of the centerline of the upper cask trunnions above the floor or rail upon which the conveyance rests during upending and removal of cask from conveyance (in.)	296	330	--
Maximum distance between centerline of upper trunnions and top of cask (in.)	46	51	G
Maximum distance between centerline of lower trunnions and bottom of cask (in.)	51	56	H
Minimum available crane under-hook clearance (in.)[c]	480	480	--

[a] Letters in "Reference Dimension" column refer to the dimensions identified in Figure 6-1.

[b] Without impact limiters installed.

[c] Minimum distance from the facility floor surface to the palm of the crane hook at its maximum elevation

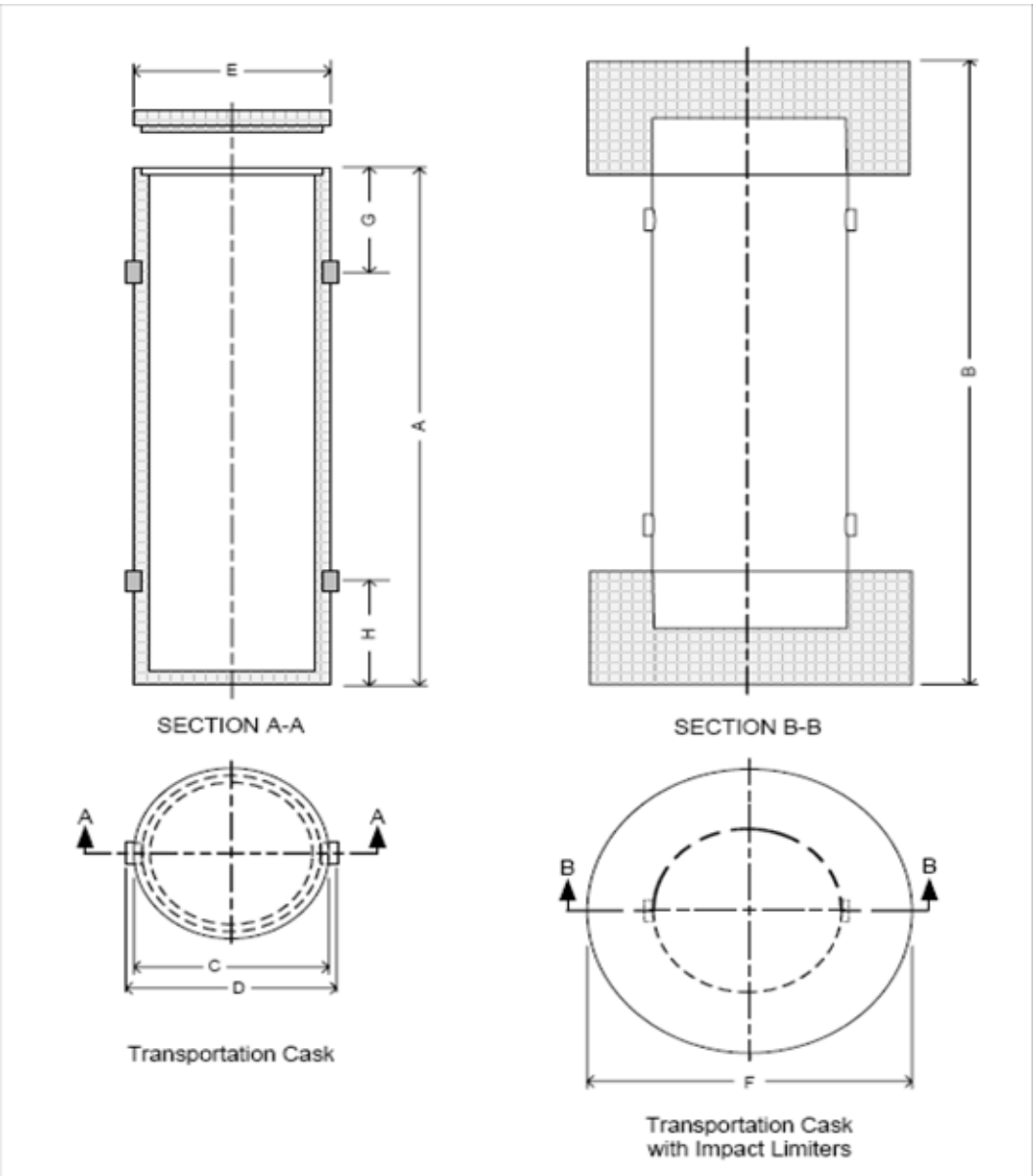

Figure 6-1. Generic Transportation Cask Illustrating the Location of Dimensions

[IICD Volume 2 (DOE 2007 [DIRS 176810]), Section 3.1.2.2, Table 1 and Figure 1 provides this information. Table 6-1 summarizes bounding characteristics for rail cask designs for use in the CRWMS for the 10% of the CSNF that will not use TAD canister transportation overpacks. Truck casks will not be received in this facility.]

6.2.1.1.3 Receive Transportation Casks

The Receipt Facility shall be designed with the capability to receive the following transportation cask designs (non-exclusively) to remove SNF canisters; handle the canisters; and manage the associated site-generated waste stream:

- NAC-STC,
- NAC-UMS,
- MP-187 Multi-Purpose Cask,
- MP-197 Multi-Purpose Cask,
- HI-STAR 100,
- TranStor TS-125, and
- TN-68 TSC.

[TSRD (DOE 2006 [DIRS 181305]), Section 3.2.1.1c, identifies the transportation casks to be utilized in accordance with 10 CFR 71 [DIRS 181967], MGR-RD [DIRS 177491], Section 3.1.2.C, and CRD (DOE 2007 [DIRS 182960]), Sections 3.2.1I and 3.2.1G (for the new text for waste stream). IICD Volume 2 (DOE 2007 [DIRS 176810]), Section 3.1.2 and Appendix B, Table B-1 also list casks. Although TN-32 is listed, it is a bare-fuel cask not appropriate for the Receipt Facility.

Information on the TN-68 TSC is available in the Technical Information Center (TIC) 255262 -TN-68 Transport SAR Responses to RAI1 [E-17906, images 1-67]; TN-68 Transport Packaging Safety Analysis Report [Rev. 1] [Docket 71-9293][CDROM] [DIRS 167988]. The MP-197 cask was added to the list because it was developed and submitted to the NRC after DOE provided the initial TSRD list. The MP-187 handles one waste form and the MP-197 handles the other. The MP-197 is expected to have similar stature in future revisions of the TSRD. Although the TranStor TS-125 cask system (from BNFL Fuel Solutions, previously TranStor) may not be licensed by the NRC, it is included here as a surrogate for potential future cask designs.]

6.2.1.1.4 Deleted

6.2.1.2 Annual Receipt Rates

The Receipt Facility shall be designed to receive the majority of the DPCs and TAD canisters that have thermal outputs at receipt of greater than 11.8kW/canister. The Receipt Facility shall be capable of receiving 140 MTHM/year of DPCs with thermal outputs greater than 11.8kW/canister and 1,000 MTHM/year of TAD canisters with thermal outputs greater than 11.8kW/canister.

[CRD (DOE 2007 [DIRS 182960]), Sections 3.2.1B and 3.2.1C and MGR-RD [DIRS 177491], Sections 3.1.1.I and 3.1.1.K provide for repository annual receipt rates. The repository receipts place DPCs in the 10% non-TAD canister portion of the waste stream to be split with the WHF. The Receipt Facility also overlaps the CRCFs in capability to receive and pass canister to the Aging Facility. The allocations above were evaluated and selected in the Nuclear Facilities Receipt Rate Requirements Analysis Engineering Study (BSC 2007 [DIRS 181547]), Sections 2.1 and 5.7.3. This information also meets IICD Volume 2 (DOE 2007 [DIRS 176810]), Section 3.1.2.1 statements.]

6.2.1.3 Transportation Cask Return to Service

The Receipt Facility shall ensure that, after removal of their radioactive material, transportation casks meet the following criteria before being returned to the CRWMS transportation element:

- Conform to a Certificate of Compliance,
- Fissile material and fissile material packaging exemption requirements in 10 CFR 71.15(a)-(f) [DIRS 181967] and the requirements of 10 CFR 71, *Packaging and Transportation of Radioactive Material*,
- 49 CFR 172, *Hazardous Materials Table, Special Provisions, Hazardous Materials Communications, Emergency Response Information, and Training Requirements* [DIRS 184241],
- 49 CFR 173, *Shippers--General Requirements for Shipments and Packagings* [DIRS 184242], for class 7 (radioactive) materials 173.401-173.477,
- Levels of non-fixed radioactive contamination on external surfaces shall be ALARA per 10 CFR 71.87(i). (Accessible external surfaces include the cask, impact limiters, personnel barrier, tie-down, transport frame, and transport vehicle.),
- Accumulations of 15 grams or more of fissile material shall be removed from the transportation casks,
- The interior of unloaded transportation casks shall be visually inspected prior to closure shall be free of debris and other foreign materials to the extent practical, comply with the appropriate transportation requirements, and
- Until modified by calculations or analyses, the combined gamma and neutron dose rate contribution from SNF measured at the basket top end plane over an open, unloaded transportation cask shall be no more than 35 mrem/hr without further evaluation of the fissile content limit of 49 CFR 173.453.

[MGR-RD [DIRS 177491], Section 3.1.2.A; and IICD Volume 1 [DIRS 178792], Section 9.2 now provide return to service criteria. The IHF will be returning transportation casks to the transportation element. The other nuclear facilities are also allocated in this requirement. The bullets are provided from the PO&PR (BSC 2008 [DIRS 185008]), Sections 2.1.8, 2.1.9, and 2.1.10; and IICD Volume 2 (DOE 2007 [DIRS 176810]), Section 3.1.15.]

6.2.1.3.1 DOE Cask Contamination

The Receipt Facility shall return DOE transportation casks to the DOE transportation system meeting DOE surface contamination limits. The exterior and interior of the DOE cask must not have removable contamination in excess of:

1. 22,000 dpm/100 cm^2 for non-fixed beta- and gamma-emitting radionuclide contamination
2. 2200 dpm/100 cm^2 for alpha-emitting radionuclides.

[IICD Volume 1 (DOE 2007 [DIRS 178792]), Section 9.2.1]

6.2.1.4 Cask Turnaround Time

The Receipt Facility shall be designed for a target transportation cask turnaround time (i.e., from receipt from the national transportation system to return to the national transportation system) of 7 days.

[PO&PR (BSC 2008 [DIRS 185008]), Section 2.1.3. This also applies to the other nuclear handling facilities.]

6.2.1.5 TAD Canister

The Receipt Facility shall be designed to receive and handle the TAD transportation cask systems and shall handle the TAD canisters for transfer, as provided by the *Transportation, Aging, and Disposal Canister System Performance Specification (DOE 2007 [DIRS 181403])*

[The MGR-RD [DIRS 177491], Section 3.1.2.F provide direction to include the TAD. The allocation to the SSF was provided in Criterion 2.2.1.11.]

6.2.1.6 Waste Acceptance Requirements

6.2.1.6.1 Commercial Canisters

The Receipt Facility shall be designed to receive and transfer TAD canisters and DPCs containing commercial SNF into aging overpacks. This CSNF shall meet the requirements specified in 10 CFR 961 [DIRS 182678].

[WASRD (DOE 2007 [DIRS 169992]), Section 4.1.]

6.2.1.6.2 Not Used

6.2.1.6.3 Cask Hook Weight

The Receipt Facility shall be designed for the maximum hook weight for any lift of the loaded rail cask, not to exceed, 400,000 lbs (including lifting features, personnel barriers, and impact limiters).

[TSRD (DOE 2006 [DIRS 181305]), Section 3.2.1.1.1. This value exceeds the casks weights allowed by IICD Volume 2 (DOE 2007 [DIRS 176810]), Section 3.1.13 (305,000 lbs in Criterion 6.2.1.1.2) and the 360,000 lbs specified in Transportation, Aging, and Disposal Canister System Performance Specification (DOE 2007 [DIRS 181403]), Section 3.2.]

6.2.1.6.4 Deleted

[This requirement is a duplicate of Criterion 6.2.1.1.1.]

6.2.1.6.5 DPC and TAD Stand Up

The Receipt Facility shall be designed to lift and suspend non-disposable SNF canisters (i.e., DPCs) and disposable SNF canisters (TADs) designed to support their own weight and that of their contents for multiple vertical lifts and horizontal translations while suspended from above via their lifting features.

[WASRD (DOE 2007 [DIRS 169992]), Section 4.3.2 for disposable canisters. The WHF, CRCFs and the Receipt Facility handle the non-disposable canisters of CSNF. The CRCFs and the Receipt Facility pass non-disposable canisters through to the Aging Facility. The CRCFs and the Receipt Facility also handle disposable canisters.]

6.2.1.6.6 South Texas TAD Canister

The Receipt Facility shall be designed to accommodate the South Texas transportation cask, the South Texas TAD canister, and the South Texas aging overpack without modification, in accordance with the following criteria:

- The TAD shall contain 12 fuel assemblies
- The aging overpack shall be 23’-6” in length, with a weight no greater than 400,000 pounds (including

lifting features, personnel barriers, and impact limiters).

- The TAD shall be 230 inches long by 52 inches in diameter and shall weigh no greater than 100,000 pounds
- The waste package shall be 248 inches long by 63 inches in diameter and shall weigh no greater than 125,000 pounds
- The transportation cask shall be 21'-6" long, without impact limiters, and shall weigh no greater than 330,000 pounds

[TMRB-2007-025 (BSC 2007 [DIRS 181499]), Activities Not to Preclude Handling of South Texas Commercial Spent Nuclear Fuel in the Surface Facilities. TSRD (DOE 2006 [DIRS 181305]), Section 3.2.1.1.1. includes lifting features, personnel barriers, and impact limiters in the loaded cask weight.]

6.2.1.6.7 Remediation

The Receipt Facility shall be designed to include adequate space, tools and radiation protection features (shielding, radiation monitors, HVAC confinement zone) to allow repair and rework canisters, or space to safely segregate the non-conforming items until a resolution can be developed and implemented.

- Damage canisters shall be inspected to determine the severity of damage.
- Non-conforming canisters shall be segregated or staged in transportation casks.
- Non-conforming canisters shall be reworked, as appropriate, to meet WP loading requirements.
- Establish confinement within the repair or rework area prior to conducting repair or rework (as appropriate).
- Once recovery from the off-normal condition has been completed, return the canisters for processing.

[The bulleted items are provided from the PO&PR (BSC 2008 [DIRS 185008]), Sections 2.4.3, 2.4.4, 2.4.7 and 2.4.8.]

6.2.2 General Requirements

6.2.2.1 Service Life

The Receipt Facility shall be designed, constructed and maintained, and shall incorporate standard materials and practices appropriate for the specific building type facilitating a 50-year operational service life.

[This is a derived requirement from Criterion 2.2.2.7. BCP YMP-2006-053 [DIRS 177483], Block 11 Page 12 of 1159 specifies the duration of the preclosure period for the surface facilities as 50 years.]

6.2.2.2 IICD Volume 1 Compliance

The Receipt Facility design shall comply with the IICD Volume 1 (DOE 2007 [DIRS 178792]) to ensure compatibility of DOE SNF waste forms with repository surface facility interfaces, including canister handling interfaces and compatibility between transportation equipment (e.g., transporters) and transported items (e.g., casks and canisters) with mechanical and envelope interfaces.

[CRD (DOE 2007 [DIRS 182960]), Section 3.2.1H and MGR-RD [DIRS 177491], Section 3.1.2.B.]

6.2.2.2.1 Transportation Cask Handling

The Receipt Facility shall be designed to receive transportation casks in a horizontal orientation, rotate the casks to a vertical orientation (either while still on their conveyance or after removal from their conveyance), and then handle the casks while in the vertical orientation. After removing the transportation cask from the transporter, this vertical handling concept includes moving and lifting transportation casks, removing canisters from casks, and loading canisters into aging overpacks.

[IICD Volume 1 (DOE 2007 [DIRS 178792]), Assumption 5.2a.]

6.2.2.2.2 Skid Handling

The Receipt Facility shall be designed to handle rail transportation systems directly. Although current surface facility concepts do not anticipate removal of any cask shipping skid, Receipt Facility design shall facilitate lifting the loaded package in its transportation configuration, including the skid and impact limiters, and transfer of the package from one conveyance to another. Receipt Facility handling equipment shall be designed to lift skids with the following bounding characteristics.

- 124 in. maximum width
- 318 in. maximum length (between lift points)
- 360 in. maximum length (overall)
- 150 in. maximum height (to top of personnel barrier)
- Exactly 4 lifting points
- Liftable from below a maximum hook lift height of 42 ft above the rail

[Although IICD Volume 1 (DOE 2007 [DIRS 178792]), Assumption 5.3 and Section 7.4, which discusses transportation skids, no longer specifies skid handling. Potential interfaces, including generic buildings and gates at the Receipt Facility, are provided in the IICD. The Holtec International HI-STAR 100 transportation cask cannot be up-ended while on the handling skid fixed to the conveyance. This particular cask will either need to be handled by the intermodal skid or be removed from the skid in a horizontal orientation and placed on a separate, temporary skid. Once on the temporary skid, the impact limiters can be removed. The transportation cask must then be lifted horizontally and placed on an L-Frame, or similar device for up ending. Thus, while the skid may not be removed from the conveyance for the HI-STAR 100, a separate skid and up ending device will be required. For more specific handling operations and information, see Chapter 7-Operating Procedures, in the Storage, Transport, and Repository Cask Systems, (Hi-Star Cask System) Safety Analysis Report, 10 CFR 71, Docket 71-9261 (Holtec International 2003 [DIRS 172633]). IICD Volume 2 (DOE 2007 [DIRS 176810]), Section 3.1.11.1 & 2 provide skid dimensions. Truck casks will not be received in this facility.]

6.2.2.2.3 Personnel Barriers

The Receipt Facility shall provide for the removal or retraction of personnel barriers from around the cask while in the preparation areas.

[IICD Volume 1 (DOE 2007 [DIRS 178792]), Section 8.1. Although IICD Volume 2 (DOE 2007 [DIRS 176810]), Section 3.1.12 allows personnel barriers to be removed/reinstalled at the repository preliminary inspection area just inside security area, this does not negate the need for this nuclear facility capability. Personnel barriers are generally cages placed around the transportation system cask barrel and between the impact limiters to restrict personnel access to the cask surface. Personnel barriers will be included as part of the transportation system. Personnel barrier details, such as fastener and lifting connections dimensions for transportation systems, may not be currently available. Since personnel barrier details are not currently available for all transportation cask types, interface parameters are not included at this time. This criterion also meets PO&PR (BSC 2008 [DIRS 185008]), Section 2.2.7.]

6.2.2.2.4 Impact Limiters

The Receipt Facility shall provide for removal of impact limiters from the cask while in the preparation areas.

[IICD Volume 1 (DOE 2007 [DIRS 178792]), Section 8.2. Impact limiters are energy-absorbing cylindrical, conical, or domed structures affixed at the ends of the transportation system casks during shipment. They will be included as part of the transportation system. Impact limiter details, such as fastener and lifting connections dimensions for transportation systems, may not be currently available. Since impact limiter details are not currently available for all transportation system types, interface parameters are not included at this time. This criterion also meets PO&PR (BSC 2008 [DIRS 185008]), Section 2.2.7.]

6.2.2.2.5 Hold-down Features

The Receipt Facility shall provide for removal of the hold-down features while the cask is in the preparation areas.

[IICD Volume 1 (DOE 2007 [DIRS 178792]), Section 8.3. Hold-down features are used to restrain the movement of the cask on the transportation system skid. They may consist of straps circling the cask body that are bolted to the skid or pillow blocks or clamps that are bolted around the cask trunnions. Strap type hold-down features restrain only vertical movement of the transportation cask on the skid and require additional features to restrain horizontal movement. Pillow block and clamp type hold-down features restrain vertical and horizontal movement of the transportation cask on the skid. The hold-down features will be included as part of the transportation system. The hold-down feature details, such as fastener and lifting connection dimensions for transportation systems, may not be currently available. Since hold-down feature details are not currently available for all transportation system types, interface parameters are not included at this time. This criterion also meets PO&PR (BSC 2008 [DIRS 185008]), Section 2.2.7.]

6.2.2.3 Emergency Management

The Receipt Facility shall provide for an operation room or an area that shall be capable of conducting emergency management functions for events sequence recovery within the facility.

[RGA REG-CRW-RG-000455 (BSC 2007 [DIRS 184409]), Section 1.2 provided agreement that an area within the nuclear facility shall perform the appropriate functions of control rooms when activated for emergency management activities. Other facilities including the CCC, the on-site EOC in the Administration Facility, and the off-site EOF have primary responsibility for managing emergencies.]

6.2.3 Safety and Protection Requirements

6.2.3.1 NSDB Requirements

6.2.3.1.1 Structural Integrity

The Receipt Facility structure shall be designed to maintain building structural integrity to protect ITS SSCs inside the building from external events, and protect against building collapse onto waste containers (safety functions).

- The mean frequency of building structural collapse due to:
  - -- extreme winds less than or equal to 120 mph shall not exceed 1.0×10^{-06}/yr.
  - -- volcanic ashfall less than or equal to a roof live load of 21 lb/ft^2 shall not exceed 1×10^{-06}/yr.
  - -- the spectrum of seismic events shall be less than or equal to 2.0×10^{-06}/yr.

[Preclosure NSDB (BSC 2008 [DIRS 184200]), Appendix C, Table C-1, Items RF.01, RF.02 and RF.04.]

6.2.3.1.2 Heliport Location

The Receipt Facility structure shall be designed to maintain building structural integrity to protect ITS SSCs inside the building from external events (safety function).

- The Receipt Facility shall be located such that there is a distance of at least one-half mile between the Receipt Facility and the repository heliport.

[Preclosure NSDB (BSC 2008 [DIRS 184200]), Appendix C, Table C-1, Item RF.03.]

6.2.3.1.3 Moderator Control

The Receipt Facility structure shall be designed to maintain moderator control (safety function).

- The mean probability of inadvertent introduction of water from sources other than fire suppression into a canister shall be less than or equal to 1.0×10^{-06} over a 720-hour period following the breach of a canister.
- In conjunction with the fire detection and suppression systems, the mean probability of inadvertent introduction of fire suppression water into a canister shall be less than or equal to 1.0×10^{-06} over a 720-hour period following the breach of a cask-canister system.

[Preclosure NSDB (BSC 2008 [DIRS 184200]) Items RF.05, FP.RF.01, and FP.RF.02. This criterion also partially satisfies PO&PR (BSC 2008 [DIRS 185008]), Section 2.6.2.]

6.2.3.1.4 Shield and Confinement Doors

The Receipt Facility shield doors (including anchorages) and confinement doors shall be designed to protect against direct exposure of personnel, preclude collapse onto waste containers, mitigate the consequences of radionuclide release, and protect against equipment shield door collapse onto a waste container (safety function).

- Equipment shield doors shall have a mean probability of inadvertent opening of less than or equal to 2.0×10^{-06} per waste container handled.
- Equipment shield doors shall be designed to preclude falling onto a waste container resulting from an impact from a conveyance.
- The mean probability that the HVAC system in the Receipt Facility confinement areas becomes unavailable during a 30-day mission time following a radionuclide release due to the simultaneous opening of any two or more doors that are either (a) equipment confinement doors or (b) equipment shield doors with confinement function shall be less than or equal to 3.0×10^{-07}.
- The mean frequency of collapse of equipment shield doors (including attachment of door to wall and frame anchorages) due to the full spectrum of seismic events shall be less than or equal to 6.0×10^{-06}/yr.

[Preclosure NSDB (BSC 2008 [DIRS 184200]), Appendix C, Table C-1, Items RF.06 through 09.]

6.2.3.1.5 Slide Gates

The Receipt Facility cask port slide gate and aging overpack port slide gate shall be designed to protect against dropping a canister due to a spurious closure of the slide gate, protect against direct exposure to personnel, and preclude canister breach due to a spurious closure of the slide gate onto the canister (safety function).

- The mean probability of a canister drop resulting from a spurious closure of a slide gate shall be less than or equal to 5.0×10^{-06} per transfer.
- The mean probability of occurrence of an inadvertent opening of a slide gate shall be less than or equal to 4.0×10^{-09} per transfer.
- Closure of a slide gate shall be incapable of breaching a canister.

[Preclosure NSDB (BSC 2008 [DIRS 184200]), Appendix C, Table C-1, Items RF.HTC.01 through 06.]

6.2.3.1.6 Cask Preparation and Lid Bolting Room Platforms

The Receipt Facility cask preparation and lid bolting room platforms shall be designed to protect against collapse of the platform onto a waste container and to protect against platform collapse or waste container breach due to an impact from the cask transfer trolley (cask preparation) or site transporter (lid bolting room) (safety functions).

- The mean frequency of collapse of the platforms due to the spectrum of seismic events shall be less than or equal to 3.0×10^{-06}/yr.
- The mean frequency of platform collapse or waste container breach from the impact of the cask transfer trolley (cask preparation) or site transporter (lid bolting room) into the platform due to the spectrum of seismic events shall be less than or equal to 2.0×10^{-05}/yr.

[Preclosure NSDB (BSC 2008 [DIRS 184200]), Appendix C, Table C-1, Items RF.HMH.01, RF.HMH.02, RF.HMC.01, and RF.HMC.02.]

6.2.3.1.7 Non-ITS SSCs Interactions with ITS SSCs

The Receipt Facility shall be designed such that interactions between non-ITS SSCs and ITS SSCs that upon failure could prevent safety functions from being performed:

- have a probability of failure of less that 1×10^{-04} over the preclosure period (as determined by PCSA),
- will not damage the ITS component if not screened out, or
- damage to the ITS SSC does not result in a doses in excess of the 10 CFR 63.111 [DIRS 180319] performance standard (as determined by PCSA).

The design of the interface shall include the dynamic loads and displacements produced by both sets of SSCs up to the first anchor point beyond the interaction. Additionally, either:

- The collapse of the non-ITS SSC shall not cause it to strike an ITS SSC,
- The collapse of the non-ITS SSC shall not impair the integrity of the ITS SSC, or
- The non-ITS SSC shall be analyzed and designed to the same seismic DBGM as the ITS SSCs subjected to the potential unacceptable interaction.

Acceptable methods of isolating each non-ITS SSC with an adverse interaction include constraints, barriers, or relocation of the non-ITS SSC.

[The wording paraphrases in NUREG-0800, Section 3.7.2, subsection II.8 (NRC 1989 [DIRS 165111]). The discussion of isolation and anchor point boundary for the design is from NUREG-0800, Section 3.7.3, subsection II.8 (NRC 1989 [DIRS 165112]). Although the NUREG is not directly applicable to the repository as it is not a reactor plant, the repository does have both non-ITS and ITS SSCs that should have the same design considerations of the interactions. The specific criterion is contained in the PDC (BSC 2007 [DIRS 179641]), Section 6.1.10.2, for any non-ITS/ITS interactions. This requirement is commonly called the two-over-one requirement.]

6.2.3.2 Fire Protection Requirements

6.2.3.2.1 Passive Fire Protection Features

The Receipt Facility shall be provided throughout with passive fire protection in the form of fire rated barriers, as determined in the FHA.

[Receipt Facility Fire Hazard Analysis (BSC 2007 [DIRS 180068]), Section 7.1.3.]

6.2.3.2.2 Automatic Fire Protection Features

The Receipt Facility shall be provided throughout with automatic fire suppression and automatic fire alarm and detection systems, as determined in the FHA.

[Receipt Facility Fire Hazard Analysis (BSC 2007 [DIRS 180068]), Section 7.1.1.]

6.2.3.2.3 Manual Fire Protection Features

The Receipt Facility shall be provided throughout with manual fire alarm pull stations, portable fire extinguishers and Class III Standpipe systems, as determined in the FHA.

[Receipt Facility Fire Hazard Analysis (BSC 2007 [DIRS 180068]), Section 7.1.2. Additionally, Regulatory Guide 1.189 [DIRS 155040], Section 3.4.1 provides for "Interior manual hose installation should be able to reach any location that contains, or could present a fire exposure hazard to, equipment important to safety with at least one effective hose stream" and specifies Class III standpipes to accomplish the design.]

6.2.3.2.4 Fire Resistant Materials

The Receipt Facility shall be designed such that: electrical cabling and other exposed materials meet flame spread and other related requirements; and equipment installed within the facility utilize non-combustible lubricants and hydraulic fluids to the maximum extent practicable, as determined in the FHA. Vehicles entering the facility shall be limited to 100 gallons of diesel fuel per vehicle.

[Receipt Facility Fire Hazard Analysis (BSC 2007 [DIRS 180068]), Section 7.1.3.]

6.2.3.2.5 Life Safety Provisions

The Receipt Facility shall be designed to meet life safety provisions such as means of egress, emergency lighting, and other features, as determined in the FHA.

[Receipt Facility Fire Hazard Analysis (BSC 2007 [DIRS 180068]), Section 7.1.4.]

6.2.3.2.6 Occupant Notification

Local fire alarm occupant notification shall be provided throughout the entire facility originating the alarm. A fire zone alarm panel or graphic zone alarm panel shall be provided at the main entrance to major facilities. A manual fire notification method, such as manual fire alarm initiation devices, shall be provided at all normally occupied facilities.

[DOE O 420.1A [DIRS 159450], Contractor Requirement 4.2.2.6. The alarm panel transmits trouble, supervisory, and alarm signals to the Central Control Center and Fire, Rescue and Medical Facility for appropriate response.]

6.2.3.3 Security Requirements

6.2.3.3.1 Physical Protection

Appropriate delays at doors and other access points, defensive positions, and mechanical controls on material movement in the canister handling area shall be included in the design.

[10 CFR 73 [DIRS 181969] is the basis to ensure that appropriate safeguard and security measures are implemented to protect the Receipt Facility and the special nuclear materials (SNM) that are handled in the Receipt Facility. This requirement is applicable to the nuclear handling facilities, Subsurface Facility, BOP, and S&S System.]

6.2.3.3.2 Physical Barriers

The Receipt Facility shall be designed to provide the second permanent physical barrier for the storage of SNF by offering substantial penetration resistance to control, deny, impede, or delay unauthorized access into the facility's security areas.

[10 CFR 73.51(d)(1) [DIRS 181969] and DOE M 470.4-2 [DIRS 178562], Chapter IX.4 through IX.8. This requirement is applicable to the nuclear handling facilities, Subsurface Facility, BOP, and S&S System. HLW is not handled in the Receipt Facility.]

6.2.3.3.3 Access Controls

The Receipt Facility shall be designed to have access controls that permit access only to individuals who are authorized to enter the facility.

[10 CFR 73.51(b)(2)(ii). [DIRS 181969] and DOE M 470.4-2 [DIRS 178562], Chapter VIII.2 specifies access controls for areas within the Receipt Facility. This requirement is applicable to the nuclear handling facilities, Subsurface Facility, BOP, and S&S System.]

6.2.3.3.4 Interior Intrusion Detection

The Receipt Facility shall be designed to have interior intrusion detection to detect and assess unauthorized penetrations or activities within the protected area. The Receipt Facility shall use IDS and/or provide remote visual observations to ensure breaches in the security area boundaries of those S&S interests under IDS protection are detected and alarms are annunciated.

[10 CFR 73.51(b)(2)(iii) and (d)(3)[DIRS 181969], DOE M 470.4-2 [DIRS 178562], Chapter VII.2.b. This requirement is applicable to the nuclear handling facilities, Subsurface Facility, BOP, and S&S System.]

6.2.3.3.5 Loss of Control

The Receipt Facility physical protection system shall be designed to protect against loss of control of the facility that could be sufficient to cause a radiation exposure exceeding the dose described in 10 CFR 72.106(b) [DIRS 181968].

[10 CFR 73.51(b)(3) [DIRS 181969]. This requirement is applicable to the nuclear handling facilities, Subsurface Facility, BOP, and S&S System.]

6.2.3.3.6 Illumination

The Receipt Facility shall be designed to provide for illumination, sufficient to permit adequate assessment of unauthorized penetrations of or activities within the facility and surrounding area.

[10 CFR 73.51(d)(2) [DIRS 181969]. This requirement is applicable to the nuclear handling facilities, Subsurface Facility, BOP, and S&S System.]

6.2.3.3.7 Secure Storage

The Receipt Facility shall be designed to store S&S interests that require secure storage in vaults, vault-type rooms, vault-type-room complexes, and/or GSA approved security containers.

[DOE M 470.4-2 [DIRS 178562], Chapter XI.1.a. This requirement is applicable to the nuclear handling facilities, Subsurface Facility, BOP, and S&S System.]

6.2.4 Miscellaneous Requirements

6.2.4.1 Surveys and Inspections

The Receipt Facility shall provide the space and equipment necessary to remotely perform radiological surveys and security inspections of the transportation cask subsystems.

[PO&PR (BSC 2008 [DIRS 185008]), Section 2.1.9.]

6.2.4.2 Decontamination Systems

The Receipt Facility shall be designed to have limited survey and decontamination systems for transportation casks.

[10 CFR 20.1501(a) [DIRS 181962]. PO&PR (BSC 2008 [DIRS 185008]), Section 2.1.9 calls for clean casks. No significant levels of contamination are expected in the Receipt Facility. However, in the event that transportation casks are surveyed and found to have surface contamination, decontamination shall be performed by the limited capability afforded in the facility. In conjunction with the Radiation/Radiological Monitoring System (See Chapter 28), the Receipt Facility shall provide a means to perform radiological analysis on samples (smears, air, process, etc) where equipment and material must be surveyed to show compliance with applicable limits prior to release from restricted areas. The process must be capable of detecting radioactive contamination levels below applicable release limits.]

6.2.4.3 Segregation of Liquids

The Receipt Facility shall be designed to provide for the collection of liquids that may intrude into areas where contamination may be present as LLW.

[Good engineering practice dictates this criteria to ensure that potential LLW is properly managed. Although the Scenario SI 628 of Preliminary Hazards Analysis for License Application Study [DIRS 167313] was written for the previous facilities, they would also reasonably apply to the current facilities. This reference will suffice until the analysis is revised. The development of drainage, piping and other low-level radioactive collection design details will be developed during detailed design.]

6.2.4.4 Transportation Cask Cavity Gas Venting

Although gas sampling is not required within the Receipt Facility as undamaged casks are handled, the Receipt Facility will be capable of venting the transportation cask cavity to the off-gas (HVAC) system prior to cask lid removal. The transportation cask venting equipment must be designed for a maximum inlet gas temperature and pressure of 541^0F and 75 psig, respectively.

[Cask cavity annulus volumes vary depending on whether fuel is directly loaded or in canisters. In general, canistered casks have much lower annulus volumes than directly loaded casks. The specified temperature and pressure requirements are based on the maximum normal operating conditions for commercial SNF and excludes DOE and navy transportation casks. For ALARA considerations it is prudent to vent the cavity gas to an off-gas collection system, i.e., HVAC. Engineering Study Transportation Cask Gas Sampling Requirements Analysis, 000-30R-MGR0-02500-000-000 (BSC 2007 [DIRS 181530]) has determined the need for this requirement. See Table A-1 for more details. Although the study only requires gas-sampling in the WHF, project direction is to have the capability in each nuclear facility (Slovic 2007 [DIRS 184156]).]

6.3 Conformance Verification

Table 6-2 Receipt Facility Conformance Verification

Criterion		Preliminary Verification Method					
Number	Description	N/A	Analysis	Exam	Demo	Review	Test
6.2.1.1	Direct Access					X	
6.2.1.1.1	Railroad Shipments					X	
6.2.1.1.2	Cask Sizes					X	
6.2.1.1.3	Receive Transportation Casks					X	
6.2.1.1.4	Deleted	---	---	---	---	---	---
6.2.1.2	Annual Receipt Rates		X				
6.2.1.3	Transportation Cask Return to Service					X	
6.2.1.3.1	DOE Cask Contamination					X	
6.2.1.4	Cask Turnaround Time		X				
6.2.1.5	TAD Canister	X					
6.2.1.6.1	Commercial Canisters					X	
6.2.1.6.2	Not Used	--	--	--	--	--	--
6.2.1.6.3	Cask Hook Weight						X
6.2.1.6.4	Deleted	--	--	--	--	--	--
6.2.1.6.5	DPC and TAD Stand Up					X	
6.2.1.6.6	South Texas TAD Canister					X	
6.2.1.6.7	Remediation					X	
6.2.2.1	Service Life					X	
6.2.2.2	IICD Volume 1 Compliance					X	
6.2.2.2.1	Transportation Cask Handling					X	
6.2.2.2.2	Skid Handling					X	
6.2.2.2.3	Personnel Barriers					X	
6.2.2.2.4	Impact Limiters					X	
6.2.2.2.5	Hold-down Features					X	
6.2.2.3	Emergency Management					X	
6.2.3.1.1	Structural Integrity					X	
6.2.3.1.2	Heliport Location		X				
6.2.3.1.3	Moderator Control					X	
6.2.3.1.4	Shield and Confinement Doors						
6.2.3.1.5	Slide Gates		X				
6.2.3.1.6	Cask Preparation and Lid Bolting Room Platforms					X	
6.2.3.1.7	Non-ITS SSCs Interactions with ITS SSCs		X				
6.2.3.2.1	Passive Fire Protection Features					X	
6.2.3.2.2	Automatic Fire Protection Features					X	
6.2.3.2.3	Manual Fire Protection Features					X	
6.2.3.2.4	Fire Resistant Materials					X	
6.2.3.2.5	Life Safety Provisions					X	
6.2.3.2.6	Occupant Notification					X	
6.2.3.3.1	Physical Protection					X	

Table 6-2 Receipt Facility Conformance Verification (Continued)

Criterion		Preliminary Verification Method					
Number	Description	N/A	Analysis	Exam	Demo	Review	Test
6.2.3.3.2	Physical Barriers					X	
6.2.3.3.3	Access Controls					X	
6.2.3.3.4	Interior Intrusion Detection					X	
6.2.3.3.5	Loss of Control					X	
6.2.3.3.6	Illumination					X	
6.2.3.3.7	Secure Storage					X	
6.2.4.1	Surveys and Inspections					X	
6.2.4.2	Decontamination Systems					X	
6.2.4.3	Segregation of Liquids					X	
6.2.4.4	Transportation Cask Cavity Gas Venting					X	

7 Emergency Diesel Generator Facility

7.1 Overview

7.1.1 Introduction

The Emergency Diesel Generator Facility (EDGF) is provided to enclose the ITS diesel generators that provides ITS power to pre-selected loads that are ITS, in the event offsite electrical power is lost. The pre-selected loads are those critical loads related to nuclear safety or equipment ITS and will be identified during the design process.

The EDGF also provides space and layout for industrial and radiological safety systems; limited operational control and monitoring, safeguards and security systems, fire protection systems, ventilation systems, and utility systems.

7.1.2 System Classification

The EDGF has been classified as non-ITS. The EDGF does not include SSCs that are ITWI.

[Preclosure NSDB (BSC 2008 [DIRS 184200]), Appendix A, Table A-1 specifically provides the classification of the facility structure.]

7.2 Functional and Performance Requirements and Bases

7.2.1 Mission Requirements

7.2.1.1 Space Allocation

The EDGF structure shall provide enclosure and space for the redundant (Train A and Train B) ITS diesel generators and associated support systems. The space allocation within the EDGF shall permit ready accessibility for inspection, repair, maintenance, cleaning, or replacement of SSCs within the facility.

[Adequate space is required for normal operation, maintenance and repair of the diesel generators. Emergency diesel generators changed to ITS diesel generators in accordance with Repository System Codes (BSC 2007 [DIRS 184183]).]

7.2.2 General Requirements

7.2.2.1 Facility Construction

The EDGF shall be constructed of non-combustible materials for structural elements to maintain the integrity of the facility. Redundant systems or component ITS within the Emergency Diesel Generator Facility shall be separated by fire resistant construction, as identified in the FHA.

[Emergency Diesel Generator Facility Fire Hazard Analysis (BSC 2007 [DIRS 180056]), Section 7.1.3.]

7.2.2.2 Ambient Air Temperature

The EDGF shall ensure the ambient air temperature in the ITS diesel generator rooms shall not be less than 40°F.

[NFPA 110 [DIRS 173511], Chapter 7, Par. 7.7.6. Emergency diesel generators changed to ITS diesel generators in accordance with Repository System Codes (BSC 2007 [DIRS 184183]).]

7.2.2.3 Service Life

The EDGF shall be designed, constructed, and maintained, and shall incorporate standard materials and practices appropriate for the specific building type facilitating a 50-year operational service life.

[This is derived requirement from Criterion 2.7.2.7. BCP YMP-2006-053 [DIRS 177483], Block 11, Page 12 of 1159 #38 specifies the duration of the preclosure period for the surface facilities.]

7.2.3 Safety and Protection Requirements

7.2.3.1 NSDB Requirements

7.2.3.1.1 Structural Contribution to ITS Electrical Equipment Cooling

Although the EDGF facility is designated as a non-ITS structure, in conjunction with the non-confinement HVAC system, the ITS electrical equipment and battery rooms in the EDGF shall support the ITS electrical function (safety function).

- The mean conditional probability of failure of the portions of the surface non-confinement HVAC system that support the cooling of ITS electrical equipment and battery rooms in the EDGF shall be less than or equal to 1.0×10^{-02} per ITS electrical train.

[Preclosure NSDB (BSC 2008 [DIRS 184200]), Appendix F, Table F-1, Items SB.VN.01.]

7.2.3.1.2 Non-ITS SSCs Interactions with ITS-SSCs

The EDGF shall be designed such that interactions between non-ITS SSCs and ITS SSCs that upon failure could prevent safety function from being performed:

- have a probability of failure of less than 1×10^{-04} over the preclosure period (as determined by PCSA),
- will not damage the ITS component if not screened out, or
- damage to the ITS SSC does not result in a doses in excess of the 10 CFR 63.111[DIRS 180319] performance standard (as determined by PCSA).

The design of the interface shall include the dynamic loads and displacements produced by both sets of SSCs up to the first anchor point beyond the interaction. Additionally, either:

- The collapse of the non-ITS SSC shall not cause it to strike an ITS SSC,
- The collapse of the non-ITS SSC shall not impair the integrity of the ITS SSC, or
- The non-ITS SSC shall be analyzed and designed to the same seismic DBGM as the ITS SSCs subjected to the potential unacceptable interaction.

Acceptable methods of isolating each non-ITS SSC with an adverse interaction include constraints, barriers, or relocation of the non-ITS SSC.

[The wording paraphrases the wording in NUREG-0800, Section 3.7.2., subsection II.8 (NRC 1989 [DIRS 165111]). The discussion of isolation and anchor point boundary for the design is from NUREG-0800, Section 3.7.3., subsection II.8 (NRC 1989 [DIRS 165112]). Although the NUREG is not directly applicable to the repository as it is not a reactor plant, the repository does have both non-ITS and ITS SSCs that should have the same design considerations of the interactions. The specific criterion is contained in the PDC (BSC 2007 [DIRS 179641]), Section 6.1.10.2 for any non-ITS/ITS interactions. This requirement is commonly called the two-over-one requirement.]

7.2.3.2 Security Requirements

7.2.3.2.1 Physical Barriers

The EDGF shall be provided with permanent physical barriers to control, deny, impede, or delay unauthorized access into all security areas. Delineate DOE-designated security areas by means of separate and distinct permanent barriers. The requirement for barriers at property protection areas must be locally implemented and included in security plans.

[DOE M 470.4-2 [DIRS 178562], Chapter IX.]

7.2.3.2.2 Access Controls

The EDGF shall have access controls that permit access only to individuals who are authorized to enter the facility.

[10 CFR 73.51(b)(2)(ii) [DIRS 181969] and DOE M 470.4-2 [DIRS 178562], Chapter VIII does not specifically address EDGF needs, as it has no material to protect.]

7.2.3.2.3 Intrusion Detection

The EDGF shall be provided with intrusion detection to detect and assess unauthorized activities within the facility.

[10 CFR 73.51(b)(2)(iii) [DIRS 181969] and DOE M 470.4-2 [DIRS 178562], Chapter VII.2b. does not specifically address EDGF needs, as it has no material to protect.]

7.2.3.2.4 Illumination

The EDGF shall be provided with sufficient illumination to permit adequate assessment of unauthorized penetrations of, or activities within, the facility and surrounding area.

[10 CFR 73.51(d)(2) [DIRS 181969].]

7.2.3.3 Fire Protection Requirements

7.2.3.3.1 Passive Fire Protection Features

The EDGF shall be provided throughout with passive fire protection in form of fire rated barriers, as determined in the FHA.

[Emergency Diesel Generator Facility Fire Hazard Analysis (BSC 2007 [DIRS 180056]), Section 7.1.3.]

7.2.3.3.2 Automatic Fire Protection Features

The EDGF shall be provided throughout with automatic fire suppression and automatic fire alarm and detection systems, as determined in the FHA.

[Emergency Diesel Generator Facility Fire Hazard Analysis (BSC 2007 [DIRS 180056]), Section 7.1.1.]

7.2.3.3.3 Manual Fire Protection Features

The EDGF shall be provided throughout with manual pull stations, portable fire extinguishers and Class III Standpipe systems, as determined in the FHA.

[Emergency Diesel Generator Facility Fire Hazard Analysis (BSC 2007 [DIRS 180056]), Section 7.1.2. Additionally, Regulatory Guide 1.189 [DIRS 155040], Section 3.4.1 provides for "Interior manual hose installation should be able to reach any location that contains, or could present a fire exposure hazard to, equipment important to safety with at least one effective hose stream" and specifies Class III standpipes to accomplish the design.]

7.2.3.3.4 Fire Resistant Materials

The EDGF shall be designed such that electrical cabling and other exposed materials meet flame spread and other related requirements, as determined in the FHA. In addition to the confinement of a potential spill, the day tank and its supports are design to withstand a DBGM 2 seismic event

[Emergency Diesel Generator Facility Fire Hazard Analysis (BSC 2007 [DIRS 180056]), Section 7.1.3, and Regulatory Guide 1.189 [DIRS 155040], Section 6.1.8.]

7.2.3.3.5 Life Safety Provisions

The EDGF shall be designed to meet life safety provisions for means of egress, including fire-rated construction, exit doors, emergency lighting, and other features, as determined in the FHA.

[Emergency Diesel Generator Facility Fire Hazard Analysis (BSC 2007 [DIRS 180056]), 7.1.5.]

7.2.3.3.6 Occupant Notification

Local fire alarm occupant notification shall be provided throughout the entire facility originating the alarm. A fire zone alarm panel or graphic zone alarm panel shall be provided at the main entrance to major facilities. A manual fire notification method, such as manual fire alarm initiation devices, shall be provided at all normally occupied facilities.

[DOE O 420.1A [DIRS 159450], Contractor Requirement 4.2.2.6. The alarm panel transmits trouble, supervisory, and alarm signals to the Central Control Center and Fire, Rescue and Medical Facility for appropriate response.]

7.2.3.3.7 Explosion Protection Features

The EDGF shall be designed to include explosion protection features. The explosion protection features shall be designed to prevent development of explosive mixtures by limiting the concentration of explosive gases and vapors within enclosures.

[Emergency Diesel Generator Facility Fire Hazard Analysis (BSC 2007 [DIRS 180056]), Sections 6.1.3 and 7.1.5, and Regulatory Guide 1.189 [DIRS 155040], Section 6.1.8.]

7.2.4 Miscellaneous Requirements

There are no identified requirements for this section. As requirements are identified in the future, they will be added.

7.3 Conformance Verification

Table 7-1. EDGF Conformance Verification

Criterion		Preliminary Verification Method					
Number	Description	N/A	Analysis	Exam	Demo	Review	Test
7.2.1.1	Space Allocation					X	
7.2.2.1	Facility Construction					X	
7.2.2.2	Ambient Air Temperature					X	
7.2.2.3	Service Life					X	
7.2.3.1.1	Structural Contribution to ITS Electrical Equipment Cooling					X	
7.2.3.1.2	Non-ITS SSCs Interactions with ITS SSCs		X				
7.2.3.2.1	Physical Barriers					X	
7.2.3.2.2	Access Controls					X	
7.2.3.2.3	Intrusion Detection					X	
7.2.3.2.4	Illumination					X	
7.2.3.3.1	Passive Fire Protection Features					X	
7.2.3.3.2	Automatic Fire Protection Features					X	
7.2.3.3.3	Manual Fire Protection Features					X	
7.2.3.3.4	Fire Resistant Materials					X	
7.2.3.3.5	Life Safety Provisions					X	
7.2.3.3.6	Occupant Notification					X	
7.2.3.3.7	Explosion Protection Features					X	

8 Subsurface Facility

8.1 Overview

8.1.1 Introduction

The Subsurface Facility provides space for the emplacement, post-emplacement, and subsurface development activities. The Subsurface Facility includes the portals, ramps, access mains and rails, turnouts, emplacement drifts (including the ground support, invert structures and ballast, waste package emplacement pallet, drip shield, and, if used, backfill), ventilation mains, shafts, shaft access drifts, alcoves, and performance confirmation areas. The facility includes the surface structures at the shafts, and closure seals and plugs. The facility isolates the radioactive material from the environment.

The Subsurface Facility also provides space and layout for operational control and monitoring, safeguards and security systems, fire protection systems, ventilation systems, and utility systems.

8.1.2 System Classification

The Subsurface Facility, including emplacement, post-emplacement, and subsurface development has been classified as non-ITS.

The rails, emplacement drift doors, nonemplacement openings, ground support for nonemplacement drifts, ground support for nonemplacement openings, emplacement drifts, emplacement drift invert (steel and ballast), waste package emplacement pallet, drip shield, drip shield emplacement gantry and excavation are classified as non-ITS. However, portions of the facility are classified as ITWI.

In accordance with the Q-List (BSC 2008 [DIRS 180109]), Appendix A, Table A-1, the following are classified as ITWI:

- Emplacement drifts
- Drip shields
- Waste package outer corrosion barrier
- Waste package inner vessel

[Preclosure NSDB (BSC 2008 [DIRS 184200]), Appendix A, Table A-1 specifically provides for the classification of the system and Q-List for ITWI SSCs. The requirement for backfill in the subsurface exhaust and access mains and turnouts was removed by TMRB-2007-043 (BSC 2007 [DIRS 182328]).]

8.2 Functional and Performance Requirements and Bases

8.2.1 Mission Requirements

8.2.1.1 Subsurface Capacity

The Subsurface Facility shall be designed to accept and dispose of 70,000 MTHM of SNF/HLW for disposal in the repository, allocated as follows:

- 63,000 MTHM of CSNF and (vitrified) HLW
- 4,667 MTHM of (vitrified) DHLW [including immobilized (vitrified) plutonium waste form (IPWF)]
- 2,333 MTHM of DOE SNF and naval SNF.

[CRD (DOE 2007 [DIRS 182960]), Sections 3.2.1D and 3.2.1A as flowed down through the MGR-RD [DIRS 177491], Sections 3.1.1.L and 3.1.1.F.]

8.2.1.2 Material Inclusion

The Subsurface Facility shall be designed and constructed to provide space to accommodate emplacement of 70,000 MTHM of SNF and HLW as specified in the Nuclear Waste Policy Act [DIRS 100016]. The Subsurface Facility shall not preclude, subject to approval of a license amendment, the ability to accept additional quantities of nuclear waste up to the projected inventory in the *Final Environmental Impact Statement (EIS) for a Geologic Repository for the Disposal of Spent Nuclear Fuel and High Level Waste at Yucca Mountain, Nye County, Nevada* (DOE 2002 [DIRS 155970]).

[CRD [DIRS 182960], Section 3.5B, as flowed down through the MGR-RD [DIRS 177491], Section 3.2.12.A. It provides for determining an available repository area to contain additional waste and for facilities that could have a life expectancy longer than the initial 24-year receipt period with proper maintenance and replacement.]

8.2.1.3 Annual Waste Emplacement Rates

The Subsurface Facility shall be designed to be capable of emplacing the following maximum annual quantities of waste packages:

- 24 naval waste packages
- 162 DOE SNF and HLW waste packages
- 1,300 MTHM of commercial SNF and HLW waste packages

In the event the DOE determines that rail access to the repository will be unavailable to support system operating conditions and receipt rates, the acceptance rates shall, instead, be based on the availability of truck transportation capability.

[CRD (DOE 2007 [DIRS 182960]), Sections 3.2.1B and 3.2.1C, and MGR-RD [DIRS 177491], Sections 3.1.1.J and 3.1.1.K. The maximum quantity of naval waste packages corresponds to the maximum number of canisters received in the IHF in any maximum year. The entire annual quantity must be emplaced as there is no aging allowed. The maximum quantity of DOE SNF/HLW co-disposal waste packages corresponds to the maximum quantity of DHLW canisters received in any single year. The maximum is from the annual maximum of 763 DHLW canisters in a single year, divided by 5 yielding at least 153 co-disposal waste packages, plus a number of waste packages to cover the remaining received DOE SNF canisters that are not co-disposed - 179-153=26. Considering that approximately 1/3rd of these 26 DOE SNF canisters will/may be disposed of singly (one canister per waste package) in a single year, this totals 162 waste packages for DOE SNF and HLW.

The maximum quantity of commercial SNF and HLW is based on the quantities of TAD canisters, the number of waste packages of commercial SNF and HLW is dependent on the number of waste packages loaded within the CRCFs and WHF annually. The CRCFs will receive 1,000 MTHM and the WHF 300 MTHM annually.

Although the Subsurface Facility is required to provide space for the waste packages identified in 8.2.1.2, there is no true annual emplacement rate identified at this time due to the existence of the Aging Facility and the need to thermally age some SNF. The numbers provided give an indication of excavation and preparation rate for drifts in the facility. IICD Volume 2 (DOE 2007 [DIRS 176810]), Section 3.1.2.1 also contains annual receipt rate and TAD canister proportionality information.]

8.2.1.4 Net Emplacement Rates

The Subsurface Facility shall be designed to be capable of accommodating the emplacement of waste packages resulting from the packaging of SNF and HLW waste forms to meet the repository annual rates minus the aging rates.

[This is a derived requirement from MGR-RD [DIRS 177491], Section 3.1.1.J.]

8.2.1.5 Subsurface Thermal Management

The Subsurface Facility shall be designed to provide space to accommodate emplacement of commercial waste packages with an allowable maximum thermal power at the time of emplacement of up to 18.0kW. The Subsurface Facility shall be designed to allow a maximum emplacement drift line load of up to 2.0 kW/m. Naval waste packages shall not exceed a thermal load of 11.8 kW and shall not be emplaced in a seven waste package segment which contains another waste package in excess of 11.8 kW or has an average thermal line load greater than 1.45 kW/m.

Waste package emplacement shall be within an envelope such that the emplacement of waste packages does not exceed the other relevant thermal limits of mid-pillar temperature, drift wall temperature, waste package temperature, and cladding temperature. The calculated Thermal Energy Density of any seven adjacent as-emplaced waste packages shall not exceed 96°C at the mid-pillar calculated using mean host-rock thermal properties and representative saturation levels for wet and dry conditions.

[MGR-RD [DIRS 177491], Sections 3.2.12.C and 3.2.12.D, and Postclosure Modeling and Analysis Design Parameters, Table 1, item # 05-03, (BSC 2008 [DIRS 183627]). The MGR-RD sections cited have been revised by CO Letter No. 08-007 (Peterson 2008 [DIRS 184939]) to provide for greater flexibility in the receipt and

processing of the incoming waste stream.]

8.2.1.6 Repository Standoff from Paintbrush

The repository shall be designed such that the minimum standoff distance between the top of each emplacement drift and the base of the Paintbrush nonwelded hydrogeologic unit shall be 100 m.

[Postclosure Modeling and Analyses Design Parameters (BSC 2008 [DIRS 183627]), Table 1, item # 01-20.]

8.2.1.7 Waste Package Separation and Standoffs

The repository shall be designed such that:

- Adjacent waste packages in a given emplacement drift shall be emplaced 0.1m (nominal) apart, from the top surface of the upper sleeve of one waste package to the bottom surface of the lower sleeve of the adjacent waste package,
- In the event that access main and exhaust main drifts are backfilled, areas at both ends of the emplaced waste will be free of backfill. The two areas will each be a minimum of 15 m long and their combined length will total a minimum of 75 m.

[MGR-RD [DIRS 177491], Section 3.2.12.E provides for the package to package spacing. Postclosure Modeling and Analysis Design Parameters, Table 1, items # 01-18 and # 05-02 (BSC 2008 [DIRS 183627]) provides the end of drift area and clarification of the 0.1m spacing. Emplacement areas will not be backfilled.]

8.2.1.8 Emplacement Drift Configuration

The subsurface facility shall be designed such that the emplacement drifts will be:

- nominally 266 ft (81 m) (+/- 5%) apart,
- nominally parallel and the design azimuth shall be the same for all emplacement drifts and shall be within a range of 70° to 80° ,
- constructed by tunnel boring machines (as will the ramps, access mains, and exhaust mains). The starter tunnel to support each unique tunnel boring machine advance shall be excavated by blasting or mechanical excavation methods,
- circular in cross section with a nominal diameter of 18 ft (5.5 m) (-0/+10%), and
- nominally horizontal grade so that overall water drainage is directly into the rock to prevent water accumulation.

[MGR-RD [DIRS 177491], Section 3.2.12.G specifies spacing and Postclosure Modeling and Analyses Design Parameters (BSC 2008 [DIRS 183627]), Table 1, items # 01-08, #01-09, # 01-10, # 01-11 and # 01-13. Drift spacing will prevent thermal interaction between adjacent drifts and to allow drainage of thermally mobilized water within the rock pillars to percolate past the drifts. Although item # 01-10 provides for a nominal diameter of 5.5 m, the 18 ft specification is within the allowable significant digits. Although 18 ft to 4 significant digits is 5.486 m, this equates to only 0.6 in difference, which is insignificant. Since 5.5 m is only 2 significant digits, this difference is not outside the tolerance range. The significant digits and rounding are in accordance with IEEE Std 260.1-2004 [DIRS 176341], which references IEEE/ASTM SI 10 2002 [DIRS 177651](use Annex A, Table A-1 bottom of A 22 and Annex B). Although the tolerances provided for drift separation and nominal diameter are no longer in the Postclosure Modeling and Analysis Design Parameters document, they were previously included in Revision 1 and will remain in the design basis until something changes these tolerances. Although the postclosure document contains proposed ranges such as 81 m +/- 5 m and 5.5 m +/- 0.5 m, these numbers have not been settled on.]

8.2.1.9 Emplacement Panel/Drift Contents

Only HLW and naval SNF waste packages from the IHF shall be placed in the first drift in Panel 1. Waste packages from CRCF-1 containing HLW (or co-disposal with DOE SNF, as appropriate), and commercial SNF in TAD canisters shall be disposed of in emplacement drifts in Panel 1, with access from the North Portal. Waste packages from the CRCFs shall be disposed in Panels 1 through 4, which shall be developed to support the expected waste shipments.

[BCP YMP-2006-053 [DIRS 177483], Block 11, Page 6 of 1159 initially provided this requirement. It has been more recently modified by BCP YMP-2006-060 [DIRS 177878]. This criterion now combines the first drift with the rest of the panels.]

8.2.1.10 Thickness of the PTn

The minimum thickness of the Paintbrush nonwelded hydrogeologic unit (PTn) above the repository shall be 10 m.

[Postclosure Modeling and Analyses Design Parameters (BSC 2008 [DIRS 183627]), Table 1, item # 01-21.]

8.2.1.11 Repository Standoff from Calico Hills

The repository shall be designed such that the minimum standoff distance between the base of each emplacement drift and the top of the Calico Hills nonwelded hydrogeologic unit shall be 60 m.

[Postclosure Modeling and Analyses Design Parameters (BSC 2008 [DIRS 183627]), Table 1, item # 01-22.]

8.2.1.12 Emplacement Drift Access

Emplacement access to Panel 1 through Panel 4 shall be via the North Portal and ramp.

[BCP YMP-2006-053 [DIRS 177483], Block 11, Page 7 of 1159 initially provided this requirement. It has been more recently modified by BCP YMP-2006-060 [DIRS 177878]. The criterion was modified to reflect only the emplacement access and that construction access is unconstrained before facility turnover to operations.]

8.2.1.13 Contingency Emplacement Drifts

The contingency capacity of the repository shall be used on as needed, linear basis, in accordance with the *IED Subsurface Facilities Geological Data,* 800-IED-WIS0-01801-000 Rev 00C (BSC 2007 [DIRS 182926]).

[TMRB 2007-046 (BSC 2007 [DIRS 184603]) documents the Lead Lab and Engineering agreement for 800-IED-WIS0-01801-000 Rev 00C. Continuous emplacement of the waste packages in all panels is planned unless sections of a drift is required to be abandoned or bypassed for geologic or other reasons. These areas may be identified as the repository is constructed. No specific drifts or areas of the subsurface layout are prescribed specifically for contingency. Excess emplacement capacity will be dealt with on a panel by panel basis as a rolling contingency.]

8.2.1.14 Performance Confirmation

The repository shall support performance confirmation activities.

[10 CFR 63.111(d) [DIRS 180319].]

8.2.1.15 Closure Sealing

Closure of the shafts and ramps shall include backfilling for the entire depth and length of the openings to prevent human intrusion and to isolate the emplacement area from the surface development. Site investigation boreholes within or near the footprint of the repository block will be backfilled with material compatible with the host rock and plugged.

[10 CFR 63.102(c) [DIRS 180319] provides for repository closure at the end of performance confirmation program. 10 CFR 63.2 defines permanent closure as final backfilling of the underground facility, if appropriate, and the sealing of the shafts, ramps and boreholes. The description of the sealing details is allowable with the definitions in 10 CFR 63. Postclosure Modeling & Analyses Design Parameters (BSC 2008 [DIRS 183627]), Table 1, items # 05-04, # 09-01, and # 09-03 provides most of this text. The current design does not have backfill in the emplacement drifts but it has not been precluded. Requirement for backfill in the subsurface exhaust and access mains was removed by TMRB-2007-043 (BSC 2007 [DIRS 182328]).]

8.2.1.16 Layout Configuration

The interface control mechanism for the repository areas, emplacement area by geologic unit, fault intersection coordinates, and borehole locations shall be controlled through the Subsurface Facilities Geological Data IED. The interface for the emplaced waste packages shall be controlled through the Emplacement Drift Configuration and Environment IED. Interface for the seismic design spectra, time histories, and ground accelerations for the subsurface facilities layout configuration shall be controlled through the Seismic Data IED.

- *IED Subsurface Facilities Geological Data,* 800-IED-WIS0-01801-000 Rev 00C (BSC 2007 [DIRS 182926]),
- *IED Seismic and Seismic Consequence Data ,* 800-IED-MGR0-00701-000 Rev 00B (BSC 2007 [DIRS 184991]),

- *IED Emplacement Drift Configuration and Environment*, 800-IED-MGR0-00501-000 Rev 00B (BSC 2007 [DIRS 180412]),
- *IED Interlocking Drip Shield,* 800-IED-SSE0-00101-000 Rev 00C (BSC 2007 [DIRS 180444])
- *IED Emplacement Drift Invert,* 800-IED-MGR0-00601-000 Rev 00B (BSC 2007 [DIRS 182746]).

The interface control mechanism for the minimum distance from top-of-waste-package to interior-height-of-drip-shield shall be controlled through the Emplacement Drift Configuration and Environment IED(s).

[The following TMRB Decision Proposals provide Lead Lab and Engineering agreements for IEDs: TMRB 2008-008 Rev 1 (BSC 2008 [DIRS 185053]) for 800-IED-MGR0-00701-000 Rev 00B and 800-IED-MGR0-00501-000 Rev 00A, TMRB-2007-048 (BSC 2007 [DIRS 184482]) for 800-IED-SSE0-00101-000-00C, and TMRB-2007-034 (BSC 2007 [DIRS 182272]) for 800-IED-MGR0-00601-000-00B. Postclosure Modeling and Analyses Design Parameters (BSC 2008 [DIRS 183627]), Table 1, items # 01-03, # 02-01, # 02-02,# 03-08, and # 07-16.]

8.2.1.17 TAD Canisters in Waste Packages

The Subsurface Facility shall be designed to accommodate waste packages containing the TAD canisters as provided by the *Transportation, Aging, and Disposal Canister System Performance Specification (DOE 2007 [DIRS 181403])*.

[CRD (DOE 2007 [DIRS 182960]), Section 3.2.1L specifically provides direction to comply with the TAD specification. The allocation to the SSF was provided in Criterion 2.2.1.11.]

8.2.1.18 Emplacement Drift Location

The base of the emplacement drifts shall be located:

- at least 394 ft (120 m) above the maximum elevation of the present-day water table,
- a minimum of 197 ft (60 m) from a Quaternary fault with potential for significant displacement, and
- a minimum of 99 ft (30 m) from the top of the Tptpv2 (Topopah Spring Tuff Crystal-poor Vitric Zone) because perched water may occur at the base of the Tpt (Topopah Spring Tuff).

[Postclosure Modeling and Analyses Design Parameters (BSC 2008 [DIRS 183627]), Table 1, items # 01-04, # 01-05, and #01-07. Based on its current location, the maximum elevation of the present-day water table beneath the emplacement area is ~850 m above sea level. Thus, the minimum elevation of the base of the emplacement drifts shall be 970 m above sea level.]

8.2.1.19 Overburden Surface Thickness

The overburden thickness (i.e., the distance from the top of each emplacement drift to the topographic surface**)** shall be a minimum of 656 ft (200 m).

[Postclosure Modeling and Analyses Design Parameters (BSC 2008 [DIRS 183627]), Table 1, item # 01-06.]

8.2.1.20 Non-Emplacement Opening Gradient

The repository non-emplacement openings shall provide a repository grade so overall water drainage and accumulation is away from emplacement areas.

[Postclosure Modeling and Analyses Design Parameters (BSC 2008 [DIRS 183627]), Table 1, item # 01-12.]

8.2.1.21 EBS Components Thermal Response

The invert and EBS components shall be designed to accommodate at least a 0.39 in. (10 mm) displacement to account for potential in situ stress and thermal response.

[Postclosure Modeling and Analyses Design Parameters (BSC 2008 [DIRS 183627]), Table 1, item # 02-04. The length for which the displacement is not provided in the source document and needs to be clarified at a later date.]

8.2.1.22 Emplacement Drift Invert

The emplacement drift invert (including ballast) shall provide a nominally level surface that supports the drip shield, waste package, and waste package emplacement pallet for static loads and that limits degradation associated with ground motion (but excluding faulting displacements) after closure of the repository. The interface control mechanism for the general configuration, plan, and details of the emplacement drift invert shall be controlled through the below IEDs. The invert materials will be carbon steel and crushed tuff. The crushed tuff shall have

properties consistent with the repository host horizon excavated by mechanical means. The interface control mechanism for the components and materials used in the invert and for the gradation and placement of the invert ballast material shall be controlled through the following IEDs:

- *IED Emplacement Drift Configuration and Environment*, 800-IED-MGR0-00501-000 Rev 00B (BSC 2007 [DIRS 180412])
- *IED Seismic and Seismic Consequence Data,* 800-IED-MGR0-00701-000 Rev 00B (BSC 2008 [DIRS 184991])
- *IED Interlocking Drip Shield,* 800-IED-SSE0-00101-000 Rev 00C (BSC 2007 [DIRS 180444])
- *IED Emplacement Drift Invert,* 800-IED-MGR0-00601-000 Rev 00B (BSC 2007 [DIRS 182746]).

[Postclosure Modeling and Analyses Design Parameters (BSC 2008 [DIRS 183627]), Table 1, items # 02-07, # 02-08 and #02-10. Although the Postclosure Modeling and Analyses Design Parameters document referred to the Emplacement Drift Invert IED, this has been replaced by the Emplacement Drift Configuration Environment IEDs. The following TMRB Decision Proposals provide Lead Lab and Engineering agreements for IEDs: TMRB 2008-008 Rev 01 (BSC 2008 [DIRS 185053]) for 800-IED-MGR0-00701-000 Rev 00B, TMRB-2007-048 (BSC 2007 [DIRS 184482]) for 800-IED-SSE0-00101-000-00C, and TMRB-2007-034 (BSC 2007 [DIRS 182272]) for 800-IED-MGR0-00601-000-00B.]

8.2.1.23 Naval Waste Package Fault Standoff Distance

The Subsurface Facility shall provide for an 8.2-ft (2.5-m) minimum emplacement standoff distance for naval SNF waste packages from mapped faults with vertical displacements of greater than 6.5 ft (2 m).

[CO Letter No. 07-032 (Peterson 2007 [DIRS 184255]) provided direction to incorporate this criterion in advance of a change to a DOE interface control requirements document. The requirement is to ensure that a seismic event does not create a condition for naval SNF that is outside the bounds of the current performance assessment. The specifics of this particular waste stream that drive this standoff distance do not apply to other portions of the waste stream being emplaced, i.e., DOE co-disposal waste packages and commercial SNF waste packages. Although the CO Letter does not contain the information on annual exceedance frequencies, Section 6.11.3 and Table 6-61 (as well as Appendix D) of the letter's reference discusses the frequencies in terms of fault movement. CBCN003 to Revision 001 provided this change. Although the CBCN provided additional text corresponding to the CO letter's referenced abstraction, this additional text did not provide for the full agreement between DOE and NNPP provided in CO letter 07-032. This additional text is therefore removed.]

8.2.1.24 Waste Package Pallet Characteristics

The characteristics of and interfaces with the waste package pallets shall be maintained in the following IEDs:

- *IED Interlocking Drip Shield*, 800-IED-SSE0-00101-000 Rev 00C (BSC 2007 [DIRS 180444])
- *IED Emplacement Pallet*, 800-IED-SSE0-00201-000 Rev 00B (BSC 2007 [DIRS 180445])
- *IED Subsurface Facilities Ground Support Committed Materials*, 800-IED-WIS0-01501-000-00C, (BSC 2007 [DIRS 180940])
- *Emplacement Drift Configuration and Environment,* 800-IED-MGR0-00501-000 REV 00B (BSC 2007 [DIRS 180412])
- *IED Seismic and Seismic Consequence Data,* 800-IED-MGR0-00701-000 Rev 00B (BSC 2008 [DIRS 184991])
- *IED Emplacement Drift Invert,* 800-IED-MGR0-00601-000 Rev 00B (BSC 2007 [DIRS 182746]).

The interface control mechanism for the minimum distance from top-of-waste-package to interior-height-of-drip-shield shall be controlled through the Emplacement Drift Configuration and Environment IED(s).

[These IEDs describe characteristics of the waste package pallets transmitted to Performance Assessment organization. The following TMRB Decision Proposals provide Lead Lab and Engineering agreements for IEDs: TMRB 2006-020 (BSC 2006 [DIRS 182037]) for 800-IED-SSE0-00201-000 Rev 00B, TMRB 2007-029 (BSC 2007 [DIRS 182336]) for 800-IED-WIS0-01501-000-00C, TMRB-2007-048 (BSC 2007 [DIRS 184482]) for 800-IED-SSE0-00101-000-00C, TMRB-2007-034 (BSC 2007 [DIRS 182272]) for 800-IED-MGR0-00601-000-00B, and TMRB 2008-008 Rev 01 (BSC 2008 [DIRS 185053]) for 800-IED-MGR0-00701-000 Rev 00B. Postclosure Modeling and Analyses Design Parameters (BSC 2008 [DIRS 183627]), Table 1, item # 02-02 for the minimum distance portion.]

8.2.2 General Requirements

8.2.2.1 Service Life

The Subsurface Facility shall be designed, constructed and maintained and shall incorporate acceptable materials and practices appropriate for a 100-year operational service life.

[This is a derived requirement from Criterion 2.2.2.7. BCP YMP-2006-053 [DIRS 177483], Block 11, Page 7 of 1159, specifies the duration of the preclosure period for the subsurface facilities as 100 years.]

8.2.2.2 Deleted

[This requirement was deleted from MGR-RD [DIRS 177491] and therefore, is not a requirement on the repository.]

8.2.2.3 Waste Package Retrieval

The Subsurface Facility shall be designed to preserve the option of initiating waste package retrieval at any time up to 50 years after waste package emplacement operations are initiated, unless a different time period is approved or specified by the Commission.

[10 CFR 63.111(e)(1) [DIRS 180319] provides for the GROA criteria. Therefore, this criterion is split between the Subsurface Facility and the repository (2.2.1.6). It reflects the difference in the pre-closure durations for both the surface facilities and the Subsurface Facility.]

8.2.2.4 Emplacement Initiation

The MGR shall have the capability to initiate emplacement at the start of the Initial Operating Capability.

[CRD (DOE 2007 [DIRS 182960]), Sections 3.5F as flowed down through the MGR-RD [DIRS 177491], Sections 3.1.1.Y. Although the change in verbiage is not currently included in the MGR-RD, the text change doesn't change the direction on starting emplacement capability.]

8.2.3 Safety and Protection Requirements

8.2.3.1 NSDB Requirements

8.2.3.1.1 Non-ITS SSCs Interactions with ITS SSCs

The Subsurface Facility shall be designed such that interactions between non-ITS SSCs and ITS SSCs that upon failure could prevent safety functions from being performed:

- have a probability of failure of less that 1×10^{-04} over the preclosure period (as determined by PCSA),
- will not damage the ITS component if not screened out, or
- damage to the ITS SSC does not result in a doses in excess of the 10 CFR 63.111 [DIRS 180319] performance standard (as determined by PCSA).

The design of the interface shall include the dynamic loads and displacements produced by both sets of SSCs up to the first anchor point beyond the interaction. Additionally, either:

- The collapse of the non-ITS SSC shall not cause it to strike an ITS SSC,
- The collapse of the non-ITS SSC shall not impair the integrity of the ITS SSC, or
- The non-ITS SSC shall be analyzed and designed to the same seismic DBGM as the ITS SSCs subjected to the potential unacceptable interaction.

Acceptable methods of isolating each non-ITS SSC with an adverse interaction include constraints, barriers, or relocation of the non-ITS SSC.

[The wording paraphrases in NUREG-0800, Section 3.7.2, subsection II.8 (NRC 1989 [DIRS 165111]). The discussion of isolation and anchor point boundary for the design is from NUREG-0800, Section 3.7.3, subsection II.8 (NRC 1989 [DIRS 165112]). Although the NUREG is not directly applicable to the repository as it is not a reactor plant, the repository does have both non-ITS and ITS SSCs that should have the same design considerations of the interactions. The specific criterion is contained in the PDC (BSC 2007 [DIRS 179641]), Section 6.1.10.2, for any non-ITS/ITS interactions. This requirement is commonly called the two-over-one requirement.]

8.2.3.2 Security Requirements

8.2.3.2.1 Exterior Intrusion Detection

The Subsurface Facility shall be provided with exterior intrusion detection systems and/or provide remote visual observations to ensure breaches in the subsurface facilities boundary are detected and alarms are annunciated.

[10 CFR 73.51(b)(2)(iii) and (d)(3) [DIRS 181969] and DOE Manual M 470.4-2 [DIRS 178562], Chapter VII.3.]

8.2.3.2.2 Physical Barriers

The Subsurface Facility shall be provided with permanent physical barriers to control, deny, impede, or delay unauthorized access into all security areas. The DOE-designated security areas shall be delineated by means of separate and distinct permanent barriers. The requirement for barriers at property protection areas shall be locally implemented and included in security plans.

[10 CFR 73.51(d)(1) [DIRS 181969] and DOE Manual M 470.4-2 [DIRS 178562], Chapter IX.]

8.2.3.2.3 Security Posting

The Subsurface Facility shall be provided with post signs, where applicable, with information on the Atomic Weapons and Special Nuclear Materials Rewards Act [DIRS 177498]; prohibited and controlled articles; entry and exit inspections of vehicles, packages, or persons; and trespassing. Post signs shall prohibit trespassing around the perimeter and at each entrance to a security area except when one security area is located within a larger posted security area.

[DOE M 470.4-2 [DIRS 178562], Chapter XIV. As this is located outside of the surface facility security arrangements, it makes sense to identify this requirement separately. It may be installed directly on the emplacement bulkheads as design features.]

8.2.3.2.4 Access Control

The Subsurface Facility access control shall be designed to allow access only to individuals who are authorized to enter the facility.

[10 CFR 73.51(b)(2)(ii) [DIRS 181969]. DOE M 470.4-2 [DIRS 178562], Chapter VIII.2 specifies access controls for areas, including the WHF. This requirement is applicable to the nuclear facilities, Subsurface Facility, and BOP.

8.2.3.2.5 Illumination

The Subsurface Facility shall be designed to provide for illumination, sufficient to permit adequate assessment of unauthorized penetrations of, or activities within, the facility and surrounding area.

[10 CFR 73.51(d)(2) [DIRS 181969]. This requirement is applicable to the nuclear facilities, Subsurface Facility, BOP, and Safeguards and Security System.]

8.2.3.3 Fire Protection Requirements

8.2.3.3.1 Fire Protection

Although fire protection needs for the Subsurface Facility have not been completely analyzed, a safe work environment shall be provided. It is expected that combustibles will be controlled and administrative procedures will be utilized in the Subsurface Facility.

[Subsurface Repository Fire Hazard Analysis (BSC 2007 [DIRS 180306]).]

8.2.4 Miscellaneous Requirements

8.2.4.1 Rockfall in Drifts

The unfailed emplacement drift ground support system shall be designed to prevent raveling or rockfall during preclosure in the emplacement drifts that could induce residual tensile stresses in the waste package above 257 MPa. In the event the ground support system fails, the waste packages that have come in contact with fallen rock or ground support materials shall be inspected for surface damage and remediated as required prior to closure.

[Postclosure Modeling and Analyses Design Parameters (BSC 2008 [DIRS 183627]), Table 1, item # 01-17.]

8.2.4.2 Personnel Protection

Emplacement operations shall not provide hazards to construction activities. Provisions shall also be made for the safeguards and security and radiation protection for construction workers.

[BCP YMP-2006-053 [DIRS 177483], Block 11, Page 7 of 1159. Although the initial requirement only described the requirement from operations to construction, the converse is equally true and appropriate to address here.]

8.2.4.3 Repository Layout

The interface control mechanism for the general layout and configuration of the subsurface facilities, including shafts, portals, ramps, mains, emplacement drifts, observation drifts, and other subsurface features, and waste package nominal endpoint coordinates, elevations, and available drift lengths shall be controlled through the:

- *IED Subsurface Facilities Layout Geographical Data*, 800-IED-WIS0-01701-000 Rev 00C (BSC 2007 [DIRS 183743])
- *IED Subsurface Facilities Geological Data*, 800-IED-WIS0-01801-000-00C (BSC 2007 [DIRS 182926])

[These IEDs describes characteristics of the Subsurface Facility layout transmitted to Performance Assessment organization. Although TMRB 2006-025 (BSC 2006 [DIRS 179794]) documents the Lead Lab and Engineering agreement for 800-IED-WIS0-01701-000 Rev 00B, a TMRB proposal for 00C does not exist due to the administrative nature of the change. Postclosure Modeling and Analyses Design Parameters (BSC 2008 [DIRS 183627]), Table 1, item # 01-02.]

8.2.4.4 Geotechnical Parameters

The interface control mechanism for the location of the subsurface facilities of the repository within the footprint of emplacement area boundary and the repository host horizon within the lithostratigraphic detail shall be controlled through:

- *IED Subsurface Facilities Layout Geographical Data*, 800-IED-WIS0-01701-000 Rev 00C (BSC 2007 [DIRS 183743])
- *IED Subsurface Facilities Geological Data*, 800-IED-WIS0-01801-000-00C (BSC 2007 [DIRS 182926])
- *IED Geotechnical and Thermal Parameters,* 800-IED-MGR0-00401-000 Rev 00H (BSC 2008 [DIRS 183932])
- *IED Geotechnical and Thermal Parameters II,* 800-IED-MGR0-00402-000-00B (BSC 2008 [DIRS 184954])
- *IED Geotechnical and Thermal Parameters III,* 800-IED-MGR0-00403-000 Rev 00B (BSC 2008 [DIRS 184153])
- *IED Geotechnical and Thermal Parameters IV,* 800-IED-MGR0-00404-000-00B (BSC 2008 [DIRS 184955])

Geotechnical parameters interfacing with the Subsurface Facility design shall be maintained in *IED Subsurface Facilities Geological Data [Sheet 1 of 1]*, 800-IED-WIS0-01801-000 Rev 00C (BSC 2007 [DIRS 182926]).

[These IEDs describe characteristics of the geotechnical and thermal parameters used in the design of the Subsurface Facility for transmittal to Performance Assessment organization. TMRB 2007-065 (BSC 2008 [DIRS 184966]) documents the Lead Lab and Engineering agreement for 800-IED-MGR0-00401-000 Rev 00H. TMRB 2007-046 (BSC 2007 [DIRS 184603]) documents the Lead Lab and Engineering agreement for 800-IED-WIS0-01801-000 Rev 00C. TMRB 2007-067 (BSC 2008 [DIRS 184965]) documents the Lead Lab and Engineering agreement for 800-IED-MGR0-00402-000 Rev 00B. TMRB 2007-074 (BSC 2007 [DIRS 185086]), TMRB-2007-012 Rev 01 (BSC 2007 [DIRS 185084]), TMRB-2008-009 (BSC 2008 [DIRS 185087]) documents the Lead Lab and Engineering agreement for 800-IED-MGR0-00403-000 Rev 00B. TMRB 2007-072 (BSC 2008 [DIRS 184967]) documents the Lead Lab and Engineering agreement for 800-IED-MGR0-00404-000 Rev 00B. Postclosure Modeling and Analyses Design Parameters (BSC 2008 [DIRS 183627]), Table 1, items # 01-01, # 01-14. The emplacement openings shall provide for post-excavation investigations of each drift that will be conducted under the Performance Confirmation Program. The objective of post-excavation investigations is to verify that host rock properties are bounded by the rock properties described within the in situ observations and model assumptions used in postclosure analyses. Post-excavation investigations will include geologic mapping to confirm that fracture geometric variability and initial rock properties are within the model input parameter range used in rockfall calculations. Although TMRB 2006-025 (BSC 2006 [DIRS 179794]) documents the Lead Lab and

Engineering agreement for 800-IED-WIS0-01701-000 Rev 00C, a TMRB proposal for 00C does not exist due to the administrative nature of the change.]

8.2.4.5 Component Characteristics

The interface control mechanisms for the design and materials used for ground support shall be controlled through the:

- *IED Subsurface Facilities Ground Support Committed Materials*, 800-IED-WIS0-01501-000-00C, (BSC 2007 [DIRS 180940])
- *IED Subsurface Facilities Ground Support Configuration*, 800-IED-WIS0-01601-000-00B (BSC 2007 [DIRS 182927])

[These IEDs describe characteristics of components or restrictions on those components within the Subsurface Facility transmitted to the Performance Assessment organization. TMRB-2007-060 (BSC 2007 [DIRS 184486]) documents the Lead Lab and Engineering agreement for 800-IED-WIS0-01601-000-00B and Postclosure Modeling and Analyses Design Parameters (BSC 2008 [DIRS 183627]), Table 1, item # 01-15 and item # 02-03. TMRB-2007-029 (BSC 2007 [DIRS 182336]) documents the Lead Lab and Engineering agreement for 800-IED-WIS0-01501-000-00C.]

8.2.4.6 Drip Shield Design

The interface control mechanism for the drip shield design shall be controlled through the *IED Interlocking Drip Shield*, 800-IED-SSE0-00101-000 Rev 00C (BSC 2007 [DIRS 180444]) such that:

- dimensions and characteristics are controlled,
- during a seismic event it resists separation through failure of the Drip Shield Connector Guides, the Drip Shield Connector Left/Right Support Beams, and the Left/Right Support Beam Connectors.

[Postclosure Modeling and Analyses Design Parameters (BSC 2008 [DIRS 183627]), Table 1, items # 07-01, # 07-08 and TMRB-2007-048 (BSC 2007 [DIRS 184482]) documents the Lead Lab and Engineering agreement for 800-IED-SSE0-00101-000 Rev 00C. Performance of the drip shield in the post-closure will be demonstrated by the Lead Laboratory.]

8.2.4.7 Drip Shield Design and Installation

The drip shield shall be designed to interlock and overlap in a manner that prevents a liquid drip path from above the drip shield to the waste package. The drip shield handling and emplacement activities shall be monitored through appropriate equipment.

[Postclosure Modeling and Analyses Design Parameters (BSC 2008 [DIRS 183627]), Table 1, item # 07-02. An operator and an independent inspector shall verify proper drip shield installation. Records demonstrating compliance shall be maintained.]

8.2.4.8 Drip Shield Materials and Thicknesses

The drip shield shall be constructed of Titanium Grade 7, with a minimum thickness of 15 mm. The drip shield structural material shall be manufactured of Titanium Grade 29. For mechanical calculations and analysis, a corrosion allowance of at least 1mm per side shall be accounted for on all drip shield surfaces. Calculations will be performed using material properties at 150°C or greater. Alloy 22 bases shall be attached to the drip shield to preclude titanium contact with the invert (including transport equipment rails).

[Postclosure Modeling and Analyses Design Parameters (BSC 2008 [DIRS 183627]), Table 1, items # 07-03, # 07-04 and # 07-07. Performance of the drip shield in the post-closure will be demonstrated by the Lead Laboratory.]

8.2.4.9 Deleted

[This constraint is no longer required because this is an interface that is now internal to the Lead Lab. The LL has established drip shield materials and Ti-7 plate thickness as constraints for design. The configuration of the drip shield is a controlled interface through the Drip Shield IED. Based on these constraints, the LL demonstrates that the drip shield will withstand credible rockfall without contacting the waste package. TMRB-2007-066 (BSC 2007 [DIRS 184235]).]

8.2.4.10 Deleted

[This constraint is no longer required per TMRB-2007-066 (BSC 2007 [DIRS 184235]).]

8.2.4.11 Copper Limits

For the as-emplaced configuration, the drip shields and waste packages shall not contact any copper that may be present in other EBS components such as parts of the emplacement vehicle rail system. The permissible total mass of elemental copper per meter of emplacement drift shall be less than 5.0 kg/meter.

[Postclosure Modeling and Analyses Design Parameters (BSC 2008 [DIRS 183627]), Table 1, item # 02-06.]

8.2.4.12 Drip Shield Fabrication

The drip shield shall be fabricated in accordance with standard nuclear industry practices, including material control, welding, weld flaw detection and repair and heat treatment.

[Postclosure Modeling and Analyses Design Parameters (BSC 2008 [DIRS 183627]), Table 1, item # 07-09.]

8.2.4.13 Drip Shield Fabrication Welds

The drip shield full penetration fabrication welds shall be nondestructively examined by visual (VT), liquid penetrant (PT), and ultrasonic testing (UT), for flaws. Fillet welds shall be inspected by means of PT and VT for flaws. All flaws larger than code standards shall be repaired.

[Postclosure Modeling and Analyses Design Parameters (BSC 2008 [DIRS 183627]), Table 1, item # 07-10.]

8.2.4.14 Drip Shield Welding Techniques

The welding techniques for the fabrication welds shall be constrained to GMAW (gas metal arc welding) except for short-circuiting mode, and automated GTAW (gas tungsten arc welding). Welding flaws will be repaired in accordance with written procedures that have been accepted by the design organization prior to their usage.

[Postclosure Modeling and Analyses Design Parameters (BSC 2008 [DIRS 183627]), Table 1, item # 07-11.]

8.2.4.15 Drip Shield Welding Materials

All drip shield welding shall be conducted in accordance with standard nuclear industry practices. For Ti-7 (Titanium Grade 7) to Ti-7 welds, Ti-7 weld filler material shall be used. For Ti-29 (Titanium Grade 29) to Ti-29 welds, Ti-29 shall be used. For Ti-7 to Ti-29 welds Ti-28 weld filler shall be used.

[Postclosure Modeling and Analyses Design Parameters (BSC 2008 [DIRS 183627]), Table 1, item # 07-12.]

8.2.4.16 Drip Shield Heat Treatment

After fabrication, the drip shield assembly and lifting feature assemblies shall be stress-relieved. After completion of all required work except for the final machining, the drip shield assembly and lifting feature assemblies shall be furnace heated for stress relief at 1100°F +/- 50°F for a minimum of 2 hours. To prevent pickup of hydrogen, a slightly oxidizing atmosphere shall be used; air-cooling is allowed.

[Postclosure Modeling and Analyses Design Parameters (BSC 2008 [DIRS 183627]), Table 1, item # 07-13.]

8.2.4.17 Drip Shield Handling and Installation Controls

The drip shield shall be handled in accordance with standard nuclear industry practices to minimize damage, surface contamination, exposure to adverse substances, and impacts. Drip shield installation shall be controlled and monitored through appropriate equipment to minimize possible waste package/drip shield damage and/or misinstallation. Installation shall include the use of equipment with an alarm.

[Postclosure Modeling and Analyses Design Parameters (BSC 2008 [DIRS 183627]), Table 1, item # 07-14. Use of operators and independent checkers is an operational constraints and not a design requirement and is not included in the criterion. Records demonstrating compliance shall be maintained is also an operational statement and not a design requirement.]

8.2.4.18 Drip Shield Thermal Expansion

To account for volume increase of corrosion products the drip shield shall not be constrained laterally or longitudinally, or rigidly mounted to the invert. Drip shield connectors shall be designed to allow thermal expansion without binding to 300°C.

[Postclosure Modeling and Analyses Design Parameters (BSC 2008 [DIRS 183627]), Table 1, item # 07-15.]

8.2.4.19 Ground Support Air Circulation

The permanent ground support (in the emplacement drifts) shall be perforated to allow air circulation between the host rock and the in-drift environment.

[Postclosure Modeling and Analyses Design Parameters (BSC 2008 [DIRS 183627]), Table 1, item # 01-16.]

8.2.4.20 Waste Package Surface Defects

The emplacement drift ground support system shall be inspected prior to drip shield installation. Waste packages that have come in contact with fallen rock or ground support materials will be inspected to ensure the damage to the waste package corrosion barrier that displace material (i.e. scratches), shall be limited to 1.6 mm (1/16 in) in depth. Modifications to the waste package corrosion barrier that deform the surface, but do not remove material (i.e. dents), shall not leave residual tensile stresses greater than 257 MPa.

[Postclosure Modeling and Analyses Design Parameters (BSC 2008 [DIRS 183627]), Table 1, item # 03-24.]

8.2.4.21 Emplacement Pallet Function

For the design static load, the emplacement pallet shall maintain the waste package emplacement nominal position for at least 300 years, and maintain a nominally horizontal waste package emplacement for 10,000 years.

[Postclosure Modeling and Analyses Design Parameters (BSC 2008 [DIRS 183627]), Table 1, item # 08-02. Performance of the emplacement pallet in the post-closure will be demonstrated by the Lead Laboratory.]

8.2.4.22 Emplacement Pallet Materials and Corrosion Allowance

The interface control mechansim for the emplacement pallet material properties shall be controlled through 800-IED-SSE0-00201-000-00B, *Emplacement Pallet IED* [DIRS 180445]. The emplacement pallet shall be fabricated of Alloy 22 plates and square stainless steel tubes. The contacts between the waste package and emplacement pallet shall be Alloy 22. The corrosion allowance for the Alloy 22 components shall be at least 2 mm. The corrosion allowance for the stainless steel components shall be at least 2 mm.

[Postclosure Modeling and Analyses Design Parameters (BSC 2008 [DIRS 183627]), Table 1, item # 08-03. The mechanical properties at 150° C shall be used for postclosure analysis. Performance of the emplacement pallet in the post-closure will be demonstrated by the Lead Laboratory.]

8.2.4.23 EBS In-Drift Materials

EBS materials shall be inert relative to each other so that physical contact between EBS materials minimizes dissimilar material interaction mechanisms. The emplacement pallet shall be designed such that, for the nominal scenario (e.g., not seismic or igneous), the waste package outer corrosion barrier shall not contact EBS components other than the Alloy 22 support surfaces of the pallet.

[Postclosure Modeling and Analyses Design Parameters (BSC 2008 [DIRS 183627]), Table 1, items # 08-04 and # 02-05. Performance of the emplacement pallet in the post-closure will be demonstrated by the Lead Laboratory.]

8.2.4.24 Emplacement Pallet Material Stresses

For the nominal scenario emplacement configuration, tensile stresses imposed on the Alloy 22 components of both the waste package and the emplacement pallet shall be less than 257 MPa, which is the approximate stress corrosion cracking threshold for Alloy 22.

[Postclosure Modeling and Analyses Design Parameters (BSC 2008 [DIRS 183627]), Table 1, item # 08-05. Performance of the emplacement pallet in the post-closure will be demonstrated by the Lead Laboratory.]

8.2.4.25 Deleted

[This constraint has been deleted per TMRB-2007-066 (BSC 2007 [DIRS 184235]).]

8.2.4.26 Flood Protection

The portal and shaft collar locations shall be situated such that they can be protected from water inflow as a result of the probable maximum flood.

[Postclosure Modeling and Analyses Design Parameters (BSC 2008 [DIRS 183627]), Table 1, item # 01-19.]

8.2.4.27 Emplacement Pallet Design

The interface control mechanism for the emplacement pallet dimensions and characteristics shall be controlled through the Emplacement Pallet IED.

[Postclosure Modeling and Analyses Design Parameters (BSC 2008 [DIRS 183627]), Table 1, item # 08-01.]

8.3 Conformance Verification

Table 8-1. Subsurface Facility Conformance Verification

Criterion		Preliminary Verification Method					
Number	Description	N/A	Analysis	Exam	Demo	Review	Test
8.2.1.1	Subsurface Capacity					X	
8.2.1.2	Material Inclusion					X	
8.2.1.3	Annual Waste Emplacement Rates		X				
8.2.1.4	Net Emplacement Rates		X				
8.2.1.5	Subsurface Thermal Management		X				
8.2.1.6	Repository Standoff From Paintbrush					X	
8.2.1.7	Waste Package Separation and Standoffs					X	
8.2.1.8	Emplacement Drift Configuration					X	
8.2.1.9	Emplacement Panel/Drift Contents					X	
8.2.1.10	Thickness of PTn					X	
8.2.1.11	Repository Standoff From Calico Hills					X	
8.2.1.12	Emplacement Drift Access					X	
8.2.1.13	Contingency Emplacement Drifts					X	
8.2.1.14	Performance Confirmation					X	
8.2.1.15	Closure Sealing					X	
8.2.1.16	Layout Configuration					X	
8.2.1.17	TAD Canisters in Waste Packages					X	
8.2.1.18	Emplacement Drift Location					X	
8.2.1.19	Overburden Surface Thickness					X	
8.2.1.20	Non-Emplacement Opening Gradient					X	
8.2.1.21	EBS Components Thermal Response					X	
8.2.1.22	Emplacement Drift Invert					X	
8.2.1.23	Naval Waste Package Fault Standoff Distance					X	
8.2.1.24	Waste Package Pallet Characteristics					X	
8.2.2.1	Service Life					X	
8.2.2.2	Deleted	--	--	--	--	--	--
8.2.2.3	Waste Package Retrieval					X	
8.2.2.4	Emplacement Initiation					X	
8.2.3.1.1	Non-ITS SSCs Interactions with ITS SSCs		X				
8.2.3.2.1	Exterior Intrusion Detection					X	
8.2.3.2.2	Physical Barriers					X	
8.2.3.2.3	Security Posting					X	
8.2.3.2.4	Access Control					X	
8.2.3.2.5	Illumination					X	
8.2.3.3.1	Fire Protection					X	
8.2.4.1	Rockfall in Drifts					X	
8.2.4.2	Personnel Protection					X	
8.2.4.3	Repository Layout					X	
8.2.4.4	Geotechnical Parameters					X	
8.2.4.5	Component Characteristics					X	
8.2.4.6	Drip Shield Design					X	

Table 8-1. Subsurface Facility Conformance Verification (Continued)

Criterion		Preliminary Verification Method					
Number	**Description**	**N/A**	**Analysis**	**Exam**	**Demo**	**Review**	**Test**
8.2.4.7	Drip Shield Design and Installation					X	
8.2.4.8	Drip Shield Materials and Thicknesses					X	
8.2.4.9	Deleted	---	---	---	---	---	---
8.2.4.10	Deleted	---	---	---	---	---	---
8.2.4.11	Copper Limits					X	
8.2.4.12	Drip Shield Fabrication					X	
8.2.4.13	Drip Shield Fabrication Welds					X	
8.2.4.14	Drip Shield Welding Techniques					X	
8.2.4.15	Drip Shield Welding Materials					X	
8.2.4.16	Drip Shield Heat Treatment					X	
8.2.4.17	Drip Shield Handling & Installation Controls					X	
8.2.4.18	Drip Shield Thermal Expansion					X	
8.2.4.19	Ground Support Air Circulation					X	
8.2.4.20	Waste Package Surface Defects					X	
8.2.4.21	Emplacement Pallet Function					X	
8.2.4.22	Emplacement Pallet Materials and Corrosion Allowance					X	
8.2.4.23	EBS In-Drift Material					X	
8.2.4.24	Emplacement Pallet Material Stresses					X	
8.2.4.25	Deleted	---	---	---	---	---	---
8.2.4.26	Flood Protection					X	
8.2.4.27	Emplacement Pallet Design					X	

9 Balance of Plant Facilities

The following subsections identify requirements for a small selection of separate and relatively more important BOP facilities. There are fewer specific requirements identified for each facility, thereby negating the need to break mission, general, safety or miscellaneous requirements into sections.

In general, the BOP Facilities provide space and layout for limited operational control and monitoring, safeguards and security systems, fire protection systems, ventilation systems, utility systems, and other systems to support the operation of the repository.

9.1 Central Control Center Facility

9.1.1 Overview

9.1.1.1 Introduction

The CCCF provides functional space, structures, and internal systems that support the central control center (CCC), primary central alarm station (CAS), HVAC rooms, electrical rooms, and central communications room. The CCC is the area from which the entire repository will be monitored and select systems controlled. The CCC will function as the technical support center (TSC) for conducting emergency management activities. The CCC contains human machine interface (HMI) consoles, printers, and other operational support equipment. A separate engineering configuration room houses a computer, printer, and other support equipment. The CAS accommodates key security personnel with desks, computers, and a console with monitoring and alarming equipment and monitors fire protection alarms as a normal monitoring function. In addition, the CAS has a safe for potentially sensitive equipment and documentation. The central operations center in the CCCF primarily includes the site communications system.

[RGA REG-CRW-RG-000455 (BSC 2007 [DIRS 184409]), Section 1.3.1 provided for the TSC in emergency situations.]

9.1.1.2 System Classification

The CCCF, which is part of the BOP Facilities, has been classified as non-ITS. The CCCF does not include SSCs that are ITWI.

[Preclosure NSDB (BSC 2008 [DIRS 184200]), Appendix A, Table A-1 specifically provides the classification of the facility structure.]

9.1.2 Functional and Performance Requirements and Bases

9.1.2.1 Mission Requirements

9.1.2.1.1 Construct CCCF

The repository CCCF shall be designed, constructed, and placed into operations concurrent with the IHF. The CCCF will provide a central location for the control and monitoring of selected repository operations and systems.

[BCP YMP-2006-053 [DIRS 177483], Block 11, Page 6 of 1159. Although the BCP specifies that the CCCF will be concurrent with the CRCF-1 and WHF, DOE funding profiles and schedules requires this facility to be constructed in the same phase as the IHF to control initial handling operations. This requirement is limited to the facility function being performed.]

9.1.2.1.2 Central Control Center

The CCCF shall provide space for a central control center including communications equipment. Space shall be provided in the BOP facilities for layout and structures for the communications system, subsystems, and components.

[BCP YMP-2004-072 [DIRS 168721], Attachment C required this for the previous facility suite. The CCCF function remains unchanged in the new facility suite.]

9.1.2.1.3 Emergency Management

The CCCF shall function as the technical support center for conducting emergency management activities. This center shall have redundant emergency communications, and shall monitor important parameters, a backup power supply, a GROA-wide emergency alarm notification system, and an electronic system to provide personnel accountability.

[DOE O 151.1C Contractor Requirement 1 [DIRS 176639] as it relates to security and fundamental worker safety. RGA REG-CRW-RG-000455 (BSC 2007 [DIRS 184409]), Section C.1.3.1 provided agreement that the CCC shall perform the functions of the TSC when activated for emergency management activities. PO&PR (BSC 2008 [DIRS 185008]), Section 2.7.6 provides a functional requirement for emergency response that is partially satisfied by the CCCF.]

9.1.2.1.4 Central Alarm Station

The CCCF shall provide for a primary CAS and the capability to provide alarm indication in one additional continually staffed location. The CAS shall be located within the protected area; have bullet resisting walls, doors, ceiling, and floor; and the interior of the station shall not be visible from outside the protected area. Regarding alarm monitoring, the redundant location need only provide a summary indication that an alarm has been generated.

[10 CFR 73.51(d)(3) [DIRS 181969] provides for the CAS. DOE M 470.4-2 [DIRS 178562], Chapter V.1.a and V.2, Chapter VII.4.a requires a primary alarm station that is named the CAS.]

9.1.2.1.5 Central Communications Center

The CCCF shall provide space for a central communications center.

[BCP YMP-2004-072 [DIRS 168721], Attachment C. Required for the previous facility suite. The CCCF function remains unchanged in the new facility suite.]

9.1.2.1.6 Engineering Configuration Room

An engineering configuration room, in close proximity to the CCC, shall be provided where DCMIS engineering configuration work can be performed.

[BCP YMP-2004-072 [DIRS 168721], Attachment C. This requirement was moved from Criterion 26.2.2.3.]

9.1.2.2 General Requirements

9.1.2.2.1 DCMIS Interface

The Environmental/Meteorological Monitoring system and the Seismic Monitoring subsystem shall interface with the DCMIS. Meteorological and seismic information shall be provided on the radiation/environmental monitoring and performance confirmation HMI console in the CCC. The operator shall be provided with the following information on the console:

- Graphical representation of the subsystem
- Values in engineering units of meteorological parameters
- Status indications and operator messages concerning the subsystem
- Audible and visual alarms indicating off-normal conditions
- Data collection, data storage and retrieval capability, and trending
- Continuous reporting of real time meteorological parameters.

[This requirement is derived from Criterion 27.2.4.1.]

9.1.2.3 Safety and Protection Requirements

9.1.2.3.1 Operations and Alarms

The CCCF central operations center shall provide for monitoring operations and alarm systems, including a mimic fire alarm panel. The CCCF shall provide the capability and/or systems to document and record system operations and alarm events.

[This statement was included because a central operations center will better facilitate management of the multiple facilities.]

9.1.2.3.2 Intrusion Detection Systems

The CCCF shall provide for IDS and/or provide remote visual observations to ensure breaches in the security area boundaries for those S&S interests under IDS protection are detected and alarms are annunciated.

[DOE M 470.4-2 [DIRS 178562], Chapter VII and 10 CFR 73.51(d)(3) [DIRS 181969].]

9.1.2.3.3 CAS Detection

The CCCF CAS shall provide for IDS and/or visual observations used and monitored by protective force personnel to detect unauthorized entry and/or presence in security areas protecting Category 1 and Category 2 quantities of SNM and other high-consequence assets.

[DOE M 470.4-2 [DIRS 178562] Chapter II.3 and Chapter V.2.a.]

9.1.2.3.4 Alarm Station Capability

The CCCF shall include a CAS and interface with a secondary alarm station (SAS) for annunciating intrusion and access control system alarms protecting Category 1 and Category 2 SNM. Ensure the CAS is a hardened post, manned 24 hours a day, and located, at a minimum, within a limited area, and protected by tamper and supervisory alarms.

[DOE M 470.4-2 [DIRS 178562], Chapter V.2. and Chapter IV.9. Criterion 9.1.2.1.4 requires the CAS to be within the protected area, which is more restricted, that being within the limited area.]

9.1.2.3.5 Secondary Alarm Station

The CCCF shall interface with the SAS at a location continuously manned such that a response can be initiated in the event a CAS is unable to perform its intended function. The SAS need not be fully redundant to the CAS, but must be capable of providing full command and control in response to safeguards and security incidents.

[DOE M 470.4-2 [DIRS 178562], Chapter V.2. and Chapter IV.9. It is not expected that the SAS will be located in the CCCF.]

9.1.2.3.6 Passive Fire Protection Features

The CCCF shall be provided throughout with passive fire protection in form of fire rated barriers, as determined in the FHA.

[Central Control Center Facility Fire Hazard Analysis (BSC 2007 [DIRS 180069]), Section 7.1.3.]

9.1.2.3.7 Automatic Fire Protection Features

The CCCF shall be provided throughout with automatic fire suppression and automatic fire alarm and detection systems, as determined in the FHA.

[Central Control Center Facility Fire Hazard Analysis (BSC 2007 [DIRS 180069]), Section 7.1.1.]

9.1.2.3.8 Manual Fire Protection Features

The CCCF shall be provided throughout with portable fire extinguishers and manual pull stations, as determined in the FHA.

[Central Control Center Facility Fire Hazard Analysis (BSC 2007 [DIRS 180069]), Section 7.1.2.]

9.1.2.3.9 Fire Resistant Materials

The CCCF shall be designed such that electrical cabling and other exposed materials meet flame spread and other related requirements, as determined in the FHA. Fire rated plenum electrical cable shall be used to limit the potential for fire under the raised floor. This cable shall be used in lieu of providing a dedicated gaseous fire suppression system for these areas.

[Central Control Center Facility Fire Hazard Analysis (BSC 2007 [DIRS 180069]), Section 7.1.3.]

9.1.2.3.10 Life Safety Provisions

The CCCF shall be designed to meet life safety provisions such as means of egress, emergency lighting, and other features, as determined in the FHA.

[Central Control Center Facility Fire Hazard Analysis (BSC 2007 [DIRS 180069]), Section 7.1.5.]

9.1.2.3.11 Occupant Notification

Local fire alarm occupant notification shall be provided throughout the entire facility originating the alarm. A fire zone alarm panel or graphic zone alarm panel shall be provided at the main entrance to major facilities. A manual fire notification method, such as manual fire alarm initiation devices, shall be provided at all normally occupied facilities.

[DOE O 420.1A [DIRS 159450], Contractor Requirement 4.2.2.6. The alarm panel transmits trouble, supervisory, and alarm signals to the Central Control Center and Fire, Rescue and Medical Facility for appropriate response.]

9.1.2.3.12 Explosion Protection

The CCCF SSCs shall be designed to include explosion protection features. The explosion protection features shall be designed to prevent development of explosive mixtures by limiting the concentration of explosive gases and vapors within enclosures.

[Central Control Center Facility Fire Hazard Analysis (BSC 2007 [DIRS 180069]), Section 7.1.4.]

9.1.2.3.13 Technical and Operational Support

Technical and operational support shall be available to provide information regarding the status of both ITS systems and non-ITS systems.

[PO&PR (BSC 2008 [DIRS 185008]), Section 3.1.1 and 3.1.2.]

9.1.2.3.14 SSC and Utility Operations Monitoring

Process operations for each SSC and utility operations will be monitored to ensure that operations are being performed within the allowable design and safety limits.

[PO&PR (BSC 2008 [DIRS 185008]), Section 3.1.3 and 3.1.4.]

9.1.2.4 Miscellaneous Requirements

There are no identified requirements for this section. As requirements are identified in the future, they will be added.

9.1.3 Conformance Verification

Table 9-1. CCCF Conformance Verification

Criterion		Preliminary Verification Method					
Number	Description	N/A	Analysis	Exam	Demo	Review	Test
9.1.2.1.1	Construct CCCF					X	
9.1.2.1.2	Central Control Center					X	
9.1.2.1.3	Emergency Management					X	
9.1.2.1.4	Central Alarm Station					X	
9.1.2.1.5	Central Communications Center					X	
9.1.2.1.6	Engineering Configuration Room					X	
9.1.2.2.1	DCMIS Interface					X	
9.1.2.3.1	Operations and Alarms					X	
9.1.2.3.2	Intrusion Detection Systems					X	
9.1.2.3.3	CAS Detection					X	
9.1.2.3.4	Alarm Station Capability					X	
9.1.2.3.5	Secondary Alarm Station					X	
9.1.2.3.6	Passive Fire Protection Features					X	
9.1.2.3.7	Automatic Fire Protection Features					X	
9.1.2.3.8	Manual Fire Protection Features					X	
9.1.2.3.9	Fire Resistant Materials					X	
9.1.2.3.10	Life Safety Provisions					X	
9.1.2.3.11	Occupant Notification						X
9.1.2.3.12	Explosion Protection					X	
9.1.2.3.13	Technical and Operational Support					X	
9.1.2.3.14	SSC and Utility Operational Monitoring					X	

9.2 Standby Diesel Generator Facility

9.2.1 Overview

9.2.1.1 Introduction

The Standby Diesel Generator Facility (SDGF) is provided to enclose the standby diesel generators that provide power, if required, to non-ITS systems and components in the event offsite power sources are interrupted. The SDGF will be located in the North Portal area near the switchgear building. The standby electrical power generated from diesel generators will be distributed to the surface facilities and to the subsurface power system required for operation. During the offsite power interruptions, the standby power will be supplied to pre-selected loads that are not ITS. These loads may include HVAC equipment, subsurface exhaust fans, intake shaft equipment, fire water facilities, perimeter security systems, lighting, and selected subsurface equipment. The standby diesel generator power will be distributed via the switchgear, underground duct banks, and overhead lines to YMP facilities.

9.2.1.2 System Classification

The SDGF, which is part of the BOP Facilities, has been classified as non-ITS. The SDGF does not include SSCs that are ITWI.

[Preclosure NSDB (BSC 2008 [DIRS 184200]), Appendix A, Table A-1 specifically provides the classification of the facility structure.]

9.2.2 Functional and Performance Requirements and Bases

9.2.2.1 Mission Requirements

9.2.2.1.1 Space Allocation

The SDGF structure shall provide enclosure and space for the standby diesel generators and associated support systems. The space allocation for the standby diesel generators shall permit ready accessibility for inspection, repair, maintenance, cleaning, or replacement.

[This functional requirement will provide the space needed to support maintenance activities that will ensure the system's continuous operation and readiness to perform its function.]

9.2.2.2 General Requirements

9.2.2.2.1 Facility Construction

The SDGF shall be constructed of non-combustible materials for structural elements to maintain structural integrity of the facility. The standby diesel generators shall also be separated with fire resistant wall construction.

[Since the SDGF is functionally similar to other non-ITS surface facilities, the separation requirements are expected to be similar to the Fire Hazard Analysis performed for other non-ITS surface facilities.]

9.2.2.2.2 Ambient Air Temperature

The SDGF shall ensure the ambient air temperature in the diesel generator rooms shall not be less than 40°F.

[NFPA 110, Standard for Emergency and Standby Power Systems [DIRS 173511], Chapter 7, Par. 7.7.6.]

9.2.2.2.3 Service Life

Design, construction, and maintenance of the SDGF shall incorporate standard materials and practices appropriate for the specific building type facilitating a 50-year operational service life.

[This is a derived requirement from Criterion 2.2.2.7. BCP YMP-2006-053 [DIRS 177483], Block 11, Page 12 # 38 and page 7 # 30 of 1159 specifies the duration of the preclosure period for the surface facilities as 50 years.]

9.2.2.3 Safety and Protection Requirements

9.2.2.3.1 Physical Barrier

The SDGF shall be provided with permanent physical barriers to control, deny, impede, or delay unauthorized access into all security areas. The requirement for barriers at property protection areas shall be locally implemented and included in security plans.

[DOE M 470.4-2 [DIRS 178562] Chapter IX .]

9.2.2.3.2 Access Control

The SDGF shall have access controls that permit access only to individuals who are authorized to enter the facility.

[10 CFR 73.51 (b)(2)(ii) [DIRS 181969] for general controls only.]

9.2.2.3.3 Interior Intrusion Detection

The SDGF shall have interior intrusion detection to detect and assess unauthorized activities within the facility.

[10 CFR 73.51 (b)(2)(iii) [DIRS 181969] for general protection only.]

9.2.2.3.4 Illumination

The SDGF shall be provided with sufficient illumination to permit adequate assessment of unauthorized penetrations of or activities within the facility and surrounding area.

[10 CFR 73.51 (d)(2) [DIRS 181969]. Illumination around the SDGF will assist with security assessment around the facility.]

9.2.2.3.5 Passive Fire Protection Features

The SDGF shall be provided throughout with passive fire protection in form of fire rated barriers, as determined in the FHA.

[Since the SDGF is functionally similar to other non-ITS surface facilities, the requirements are expected to be similar to the Site Fire Hazard Analysis (BSC 2007 [DIRS 181993]).]

9.2.2.3.6 Automatic Fire Protection Features

The SDGF shall be provided throughout with automatic fire suppression and automatic fire alarm and detection systems, as determined in the FHA.

[Since the SDGF is functionally similar to other non-ITS surface facilities, the requirements are expected to be similar to the Fire Hazard Analysis performed for other non-ITS surface facilities.]

9.2.2.3.7 Manual Fire Protection Features

The SDGF shall be provided throughout with portable fire extinguishers and manual fire alarm pull stations, as determined in the FHA

[Occupied facilities require manual fire protection features defined in NFPA codes and standards, as identified in the Site Fire Hazard Analysis (BSC 2007 [DIRS 181993]). Since the SDGF is a non-ITS facility, Regulatory Guide 1.189 [DIRS 155040], Section 3.4.1 providing for "Interior manual hose installation should be able to reach any location that contains, or could present a fire exposure hazard to, equipment important to safety with at least one effective hose stream" does not apply. Although a standpipe system may be identified as a design solution in the future, non-ITS facilities do not require the Class III standpipes.]

9.2.2.3.8 Fire Resistant Materials

The SDGF shall be designed such that electrical cabling and other exposed materials meet flame spread and other related requirements, as determined in the FHA.

[The occupied facilities require fire protection support as defined in national fire protection codes and the Site Fire Hazard Analysis (BSC 2007 [DIRS 181993]).]

9.2.2.3.9 Life Safety Provisions

The SDGF shall be designed to meet life safety provisions such as means of egress, emergency lighting, and other features, as determined in the FHA.

[The occupied facilities require fire protection support as defined in national fire protection codes and the Site Fire Hazard Analysis (BSC 2007 [DIRS 181993]).]

9.2.2.3.10 Occupant Notification

Local fire alarm occupant notification shall be provided throughout the entire facility originating the alarm. A fire zone alarm panel or graphic zone alarm panel shall be provided at the main entrance to major facilities. A manual fire notification method, such as manual fire alarm initiation devices, shall be provided at all normally occupied facilities.

[DOE O 420.1A [DIRS 159450], Contractor Requirement 4.2.2.6. The alarm panel transmits trouble, supervisory, and alarm signals to the Central Control Center and Fire, Rescue and Medical Facility for appropriate response.]

9.2.2.4 Miscellaneous Requirements

There are no identified requirements for this section. As requirements are identified in the future, they will be added.

9.2.3 Conformance Verification

Table 9-2. SDGF Conformance Verification

Criterion		Preliminary Verification Method					
Number	Description	N/A	Analysis	Exam	Demo	Review	Test
9.2.1.1.1	Space Allocation					X	
9.2.2.2.1	Facility Construction					X	
9.2.2.2.2	Ambient Air Temperature					X	
9.2.2.2.3	Service Life					X	
9.2.2.3.1	Physical Barrier					X	
9.2.2.3.2	Access Control					X	
9.2.2.3.3	Interior Intrusion Detection					X	
9.2.2.3.4	Illumination						X
9.2.2.3.5	Passive Fire Protection Features					X	
9.2.2.3.6	Automatic Fire Protection Features					X	
9.2.2.3.7	Manual Fire Protection Features					X	
9.2.2.3.8	Fire Resistant Materials					X	
9.2.2.3.9	Life Safety Provisions					X	
9.2.2.3.10	Occupant Notification						X

9.3 Warehouse and Non-Nuclear Receipt Facility

9.3.1 Overview

9.3.1.1 Introduction

The WNNRF will receive railcars and trucks containing empty waste packages and emplacement pallets, empty TAD canisters, and empty STCs from offsite fabricators. The WNNRF and associated facilities will provide space and equipment for the following operations:

- Receiving and inspection of incoming empty waste packages, TAD canisters, and cleaning of those items as necessary.
- Preparing empty waste packages for transfer to the IHF or a CRCF
- Preparing empty TAD canisters for transfer to the WHF
- Preparing empty STCs for transfer to the Receipt Facility, WHF, or a CRCF
- Staging empty waste packages and lids and pallets, empty TAD canisters and lids, and empty STCs and emplacement pallets for movement into the appropriate nuclear handling facility
- Configuring the empty waste package, pallet, and shield plugs for a surface transporter.

Operations involving aging overpacks are performed at outdoor facilities remote from the WNNRF.

[TMRB-2007-039 (BSC 2007 [DIRS 182185]), WNNRF (Building 230) Scope Alignment.]

9.3.1.2 System Classification

The WNNRF, which is part of the BOP Facilities, has been classified as non-ITS. The WNNRF does not include SSCs that are ITWI.

[Preclosure NSDB (BSC 2008 [DIRS 184200]), Appendix A, Table A-1 specifically provides the classification of the facility structure.]

9.3.2 Functional and Performance Requirements and Bases

9.3.2.1 Mission Requirements

9.3.2.1.1 Construct WNNRF

Provide a new warehouse (WNRRF) and associated facilities that shall provide space to

(1) receive, inspect, and stage empty waste packages and waste package lids;
(2) load empty waste packages onto surface transporters;
(3) receive, inspect, and stage empty TAD canisters and lids;
(4) load empty TAD canisters and lids onto surface transporters;
(5) receive, inspect, and stage empty shielded transfer casks, aging overpacks, and lids;
(6) load empty shielded transfer casks, aging overpacks, and lids onto surface transporters.

[MGR-RD [DIRS 177491], Section 3.2.5.E. provides for a warehouse (other facilities are located elsewhere), and YMP-2006-043 [DIRS 177485], Block 11, Page 6 of 32. Aging overpacks will not be received into the WNNRF directly, but will be received at one of the associated facilities.]

9.3.2.1.2 Deleted

[This requirement was deleted per TMRB-2007-039 (BSC 2007 [DIRS 182185]).]

9.3.2.1.3 TAD Canister

The WNNRF shall be designed to accommodate the TAD canisters to be loaded in the WHF as described by the *Transportation, Aging, and Disposal Canister System Performance Specification (DOE 2007 [DIRS 181403]).*

[CRD (DOE 2007 [DIRS 182960]), Section 3.2.1L specifically provides direction to comply with the TAD specification. The allocation to the WNNRF was provided in Criterion 2.2.1.11.]

9.3.2.2 General Requirements

9.3.2.2.1 Layout and General Arrangement

A suite of handling fixtures, including yokes, lift beams, collars, grapples, and attachments, shall be provided to support the operations of the WNNRF. Lay down areas shall be included, as required, for fixtures and tooling to accommodate the different size, diameter, length, and weights for each waste package and TAD canister configuration used at the repository.

[The WNNRF requires adequate space & equipment to handle receipt of railcars and trucks containing empty waste packages and TAD canisters.]

9.3.2.2.2 Inspection Capability

The WNRRF shall provide the space and equipment necessary to perform security inspections of the cask and waste package subsystems.

[Inspection of incoming empty waste packages, TAD canisters and overpacks will be performed in the WNNRF or associated facilities.]

9.3.2.3 Safety and Protection Requirements

9.3.2.3.1 Passive Fire Protection Features

The WNNRF shall be provided throughout with passive fire protection in form of fire rated barriers, as determined in the FHA.

[Since the WNNRF is functionally similar to other non-ITS surface facilities, the requirements are expected to be similar to the Site Fire Hazard Analysis (BSC 2007 [DIRS 181993]), performed for other non-ITS surface facilities.]

9.3.2.3.2 Automatic Fire Protection Features

The WNNRF shall be provided throughout with automatic fire suppression and automatic fire alarm and detection systems, as determined in the FHA.

[Since the WNNRF is functionally similar to other non-ITS surface facilities, the requirements are expected to be similar to the Site Fire Hazard Analysis (BSC 2007 [DIRS 181993]), performed for other non-ITS surface facilities.]

9.3.2.3.3 Manual Fire Protection Features

The WNNRF shall be provided throughout with portable fire extinguishers and manual fire alarm pull stations, as determined in the FHA.

[Occupied facilities require fire protection support defined in NFPA codes and standards, as identified in the Site Fire Hazard Analysis (BSC 2007 [DIRS 181993]). Since the WNNRF is a non-ITS facility, Regulatory Guide 1.189 [DIRS 155040], Section 3.4.1 providing for "Interior manual hose installation should be able to reach any location that contains, or could present a fire exposure hazard to, equipment important to safety with at least one effective hose stream" does not apply. Although a standpipe system may be identified as a design solution in the future, non-ITS facilities do not require Class III standpipes.]

9.3.2.3.4 Fire Resistant Materials

The WNNRF shall be designed such that electrical cabling and exposed materials meet flame spread and other related requirements, as determined in the FHA.

[Since the WNNRF is functionally similar to other non-ITS surface facilities, the requirements are expected to be similar to the Site Fire Hazard Analysis (BSC 2007 [DIRS 181993]), performed for other non-ITS surface facilities.]

9.3.2.3.5 Life Safety Provisions

The WNNRF shall be designed to meet life safety provisions such as means of egress, emergency lighting, and other features, as determined in the FHA.

[Since the WNNRF is functionally similar to other non-ITS surface facilities, the requirements are expected to be similar to the Site Fire Hazard Analysis (BSC 2007 [DIRS 181993]), performed for other non-ITS surface facilities.]

9.3.2.3.6 Occupant Notification

Local fire alarm occupant notification shall be provided throughout the entire facility originating the alarm. A fire zone alarm panel or graphic zone alarm panel shall be provided at the main entrance to major facilities. A manual fire notification method, such as manual fire alarm initiation devices, shall be provided at all normally occupied facilities.

[DOE O 420.1A [DIRS 159450], Contractor Requirement 4.2.2.6. The alarm panel transmits trouble, supervisory, and alarm signals to the Central Control Center and Fire, Rescue and Medical Facility for appropriate response.]

9.3.2.3.7 Emergency Management

The WNNRF shall fulfill the emergency management functions required of an operational support center (OSC) when activated under the site emergency plan.

[RGA REG-CRW-RG-000455 (BSC 2007 [DIRS 184409]), Section 1.3.2 provided agreement for the OSC when activated for emergency management activities.]

9.3.2.4 Miscellaneous Requirements

9.3.2.4.1 Empty STCs and AOs

Empty STCs and AOs shall be received at the repository. STCs and AOs shall be received for use in handling canistered SNF.

[TMRB-2007-042 (BSC 2007 [DIRS 182479]), TMRB Decision Proposal Use of Vertical Shielded Transfer Cask (STC). PO&PR (BSC 2008 [DIRS 185008]), Section 2.1.1.]

9.3.2.4.2 Non-Nuclear Equipment and Materials

Other non-nuclear equipment and materials shall be received at the repository. Non-nuclear equipment and materials shall be properly received, inspected, stored, and inventoried to preserve component integrity until use.

[PO&PR (BSC 2008 [DIRS 185008]), Section 2.1.2]

9.3.2.4.3 Storage for Empty Waste Packages

Until modified by calculations or analysis, the repository shall be capable of accommodating at least 50 empty waste packages in storage areas; stored in manner that protects them from damage and deterioration (within a storage area).

[PO&PR (BSC 2008 [DIRS 185008]), Sections 2.1.6 and 2.1.7. To avoid damage to the waste package outer corrosion barrier, the following provisions should include, but are not limited to: (1) ensure that empty waste packages are handled by the sleeve of the outer corrosion barrier, or by features that ensure that the surface of the outer corrosion barrier will be handled by fixtures that will neither mar the surface nor induce residual tensile stresses and (2) ensure that empty waste packages are stored in fixturing that precludes pickup of contaminant-bearing moisture, including those contaminants known to be inimical to adequate long-term performance of the waste package outer corrosion barrier.]

9.3.3 Conformance Verification

Table 9-3. WNNRF Conformance Verification

Criterion		Preliminary Verification Method					
Number	Description	N/A	Analysis	Exam	Demo	Review	Test
9.3.2.1.1	Construct WNNRF					X	
9.3.2.1.2	Deleted	--	--	--	--	--	--
9.3.2.1.3	TAD Canister					X	
9.3.2.2.1	Layout and General Arrangement					X	
9.3.2.2.2	Inspection Capability					X	
9.3.2.3.1	Passive Fire Protection Features					X	
9.3.2.3.2	Automatic Fire Protection Features		X				
9.3.2.3.3	Manual Fire Protection Features					X	
9.3.2.3.4	Fire Resistant Materials					X	
9.3.2.3.5	Life Safety Provisions					X	
9.3.2.3.6	Occupant Notification					X	
9.3.2.3.7	Emergency Management					X	
9.3.2.4.1	Empty STCs and AOs					X	
9.3.2.4.2	Non-Nuclear Equipment and Materials					X	
9.3.2.4.3	Storage for Empty Waste Packages					X	

9.4 Heavy Equipment Maintenance Facility

9.4.1 Overview

9.4.1.1 Introduction

The HEMF will be located near the North Portal entrance and the surface waste handling facilities to provide maintenance capability for the heavy-load handling equipment used to transport nuclear waste to and from the IHF, WHF, CRCFs, Receipt Facility, Aging Facility, and Subsurface Facility. The HEMF includes space for performing preventative maintenance and equipment repair associated with the fleet of mobile operational transport equipment within the GROA. Preliminary design considerations include maintenance and repair of the TEV, drip shield emplacement equipment, cask transfer trailer, cask tractor, and site transporter and potential decontamination of this equipment (this could include radiation surveillance and monitoring equipment). Maintenance personnel will routinely perform scheduled preventive maintenance and periodic repair, replacement, and testing of equipment. No waste forms are expected to be handled in the HEMF. However, if the HEMF is used for maintenance of radioactively contaminated equipment (possibly under unusual circumstances), it will provide for the collection of liquids that may intrude into areas where contamination may be present, as LLW.

9.4.1.2 System Classification

The HEMF, which is part of the BOP Facilities, has been classified as non-ITS. The HEMF does not include SSCs that are ITWI.

[Preclosure NSDB (BSC 2008 [DIRS 184200]), Appendix A, Table A-1 specifically provides the classification of the facility structure as part of the maintenance and repair facilities. HEMF is not specifically listed in the NSDB.]

9.4.2 Functional and Performance Requirements and Bases

9.4.2.1 Mission Requirements

9.4.2.1.1 Construct HEMF

Provide the HEMF for maintenance capability of heavy-load handling equipment.

[BCP-YMP-2006-053 [DIRS 177483] provides for requirements in support of the repository including maintenance facility.]

9.4.2.2 General Requirements

9.4.2.2.1 HEMF Layout

The HEMF shall provide functional space and equipment to enable the maintenance and repair of the fleet of transport equipment used within the GROA and office space and personnel areas for the maintenance and repair function.

[A maintenance shop is necessary to perform routine maintenance of the mobile operational transport equipment.]

9.4.2.2.2 Not Used

9.4.2.2.3 Production Capacity

The HEMF shall be designed to support the equipment used in the full production capacity.

[Adequate space is required in the HEMF to contain the appropriate machinery, equipment and tools necessary to perform routine maintenance.]

9.4.2.2.4 Transport for Heavy Equipment

The HEMF shall be readily accessible from the North Portal facilities in the event failed transport equipment must be towed or hauled to the HEMF for repair or maintenance.

[It is necessary for the HEMF to be located near the North Portal facilities to provide maintenance capabilities, as necessary.]

9.4.2.2.5 Equipment Maintenance Operations

The HEMF shall provide preventive and corrective maintenance for repository surface and subsurface operational equipment. The repository will be using and handling multiple quantities of each heavy equipment item, so maintenance and service operations may occur continuously at the facility.

[Maintenance personnel will be required to perform routine maintenance to support the continuous operation of the facility.]

9.4.2.2.6 Equipment and Accessories

The HEMF shall be equipped with movable floor cranes, tow vehicles, forklift trucks, a machine shop, a welding shop, charging stations, and large maintenance bays for equipment parking and lay down space.

[Adequate space is required in the HEMF to contain the appropriate machinery, equipment and tools necessary to perform routine maintenance, as well as, excess space to stage equipment and maintenance vehicles.]

9.4.2.3 Safety and Protection Requirements

9.4.2.3.1 Passive Fire Protection Features

The HEMF shall be provided throughout with passive fire protection in form of fire rated barriers, as determined in the FHA.

[Since the HEMF is functionally similar to other non-ITS surface facilities, the requirements are expected to be similar to the Site Fire Hazard Analysis (BSC 2007 [DIRS 181993]), performed for other non-ITS surface facilities.]

9.4.2.3.2 Automatic Fire Protection Features

The HEMF shall be provided throughout with automatic fire suppression and automatic fire alarm and detection systems, as determined in the FHA.

[Since the HEMF is functionally similar to other non-ITS surface facilities, the requirements are expected to be similar to the Site Fire Hazard Analysis (BSC 2007 [DIRS 181993]), performed for other non-ITS surface facilities.]

9.4.2.3.3 Manual Fire Protection Features

The HEMF shall be provided throughout with portable fire extinguishers and manual fire alarm pull stations, as determined in the FHA.

[Occupied facilities require fire protection support defined in NFPA codes and standards, as identified in the Site Fire Hazard Analysis (BSC 2007 [DIRS 181993]). Since the HEMF is a non-ITS facility, Regulatory Guide 1.189 [DIRS 155040], Section 3.4.1 providing for "Interior manual hose installation should be able to reach any location that contains, or could present a fire exposure hazard to, equipment important to safety with at least one effective hose stream" does not apply. Although a standpipe system may be identified as a design solution in the future, non-ITS facilities do not require Class III standpipes.]

9.4.2.3.4 Fire Resistant Materials

The HEMF shall be designed such that electrical cabling and exposed materials meet flame spread and other related requirements, as determined in the FHA.

[Since the HEMF is functionally similar to other non-ITS surface facilities, the requirements are expected to be similar to the Site Fire Hazard Analysis (BSC 2007 [DIRS 181993]), performed for other non-ITS surface facilities.]

9.4.2.3.5 Life Safety Provisions

The HEMF shall be designed to meet life safety provisions such as means of egress, emergency lighting, and other features, as determined in the FHA.

[Since the HEMF is functionally similar to other non-ITS surface facilities, the requirements are expected to be similar to the Site Fire Hazard Analysis (BSC 2007 [DIRS 181993]), performed for other non-ITS surface facilities.]

9.4.2.3.6 Occupant Notification

Local fire alarm occupant notification shall be provided throughout the entire facility originating the alarm. A fire zone alarm panel or graphic zone alarm panel shall be provided at the main entrance to major facilities. A manual fire notification method, such as manual fire alarm initiation devices, shall be provided at all normally occupied facilities.

[DOE O 420.1A [DIRS 159450], Contractor Requirement 4.2.2.6. The alarm panel transmits trouble, supervisory, and alarm signals to the Central Control Center and Fire, Rescue and Medical Facility for appropriate response.]

9.4.2.4 Miscellaneous Requirements

9.4.2.4.1 Segregation of Liquids

If the HEMF is used for maintenance of radioactively contaminated equipment (possibly under unusual circumstances), it shall provide for the collection of liquids that may intrude into areas where contamination may be present, as LLW.

[Good engineering practice dictates this requirement to ensure potential LLW is properly managed. Although the Preliminary Hazards Analysis for License Application Study, Scenario SI 628 [DIRS 167313] was written for the previous facilities, they would also reasonably apply to the current facilities. This reference will suffice until the analysis is revised. The development of drainage, piping, and other low- level radioactive collection design

details will be developed during detailed design.]

9.4.2.4.2 Oil/Water Separator

An oil/water separator shall be provided at the HEMF to prevent oils from entering into the drainage system. The system shall include a sampling port at or near the discharge point.

[Appropriate equipment and containment is necessary since the work performed at the HEMF will involve the possible spillage of oil. This is based on an interpretation of 40 CFR 112.12 [DIRS 184243].]

9.4.3 Conformance Verification

Table 9-4. HEMF Conformance Verification

Criterion		Preliminary Verification Method					
Number	Description	N/A	Analysis	Exam	Demo	Review	Test
9.4.2.1.1	Construct HEMF					X	
9.4.2.2.1	HEMF Layout					X	
9.4.2.2.2	Not Used	--	--	--	--	--	--
9.4.2.2.3	Production Capacity					X	
9.4.2.2.4	Transport for Heavy Equipment					X	
9.4.2.2.5	Equipment Maintenance Operations					X	
9.4.2.2.6	Equipment and Accessories					X	
9.4.2.3.1	Passive Fire Protection Features					X	
9.4.2.3.2	Automatic Fire Protection Features		X				
9.4.2.3.3	Manual Fire Protection Features					X	
9.4.2.3.4	Fire Resistant Materials					X	
9.4.2.3.5	Life Safety Provisions					X	
9.4.2.3.6	Occupant Notification					X	
9.4.2.4.1	Segregation of Liquids					X	
9.4.2.4.2	Oil/Water Separator					X	

9.5 Administration Facility

9.5.1 Overview

9.5.1.1 Introduction

The Administration Facility provides functional space for offices to accommodate repository staff, food services, training, computer operations, and an emergency operations center. The Administrative Facility shall provide for an emergency operations center (EOC) that will be fully capable of functioning as an alternate TSC and as a near-site emergency operations facility (EOF) if, or when, activated by the site emergency plan.

[RGA REG-CRW-RG-000455 (BSC 2007 [DIRS 184409]), Section 1.3.3 provides for the EOC outside the security area and within 10 miles of the TSC.]

9.5.1.2 System Classification

The Administration Facility, which is part of the BOP Facilities, has been classified as non-ITS. The Administration Facility does not include SSCs that are ITWI.

[Preclosure NSDB (BSC 2008 [DIRS 184200]), Appendix A, Table A-1 specifically provides the classification of the facility structure.]

9.5.2 Functional and Performance Requirements and Bases

9.5.2.1 Mission Requirements

9.5.2.1.1 Not Used

9.5.2.1.2 NRC Offices

The Administration Facility shall provide office space for the exclusive use of the NRC inspection personnel including services for heat, air-conditioning, light, electrical outlets, and janitorial services. The office shall provide the inspector both visual and acoustic privacy. The space shall accommodate two full-time inspectors, and other transient NRC personnel, with a minimum space of 250 square ft.

[10 CFR 63.75(c)(1-2) [DIRS 180319]. The Administration Facility is considered convenient to, provide full access to, and commensurate with the other repository facilities. This requirement does not include all furniture, supplies, and communication equipment that will be furnished by the NRC.]

9.5.2.1.3 Administrative Offices

The Administration Facility shall include space for the following operational and support services:

- General operational management and administration (including procurement, QA, safety, and health protection support for the Rail Equipment Maintenance Yard (REMY))
- Operations, engineering, and regulatory personnel
- Engineering and regulatory
- Food preparation, storage, and consumption (i.e., 24-hour/day cafeteria)
- Computer operation
- General training, conference, and auditorium
- Equipment and personnel to notify the public regarding a radiological event
- Emergency Operations Center (EOC)
- Records Center.

[MGR-RD [DIRS 177491], Section 3.2.5.E provides for the construction of an office building. BCP YMP-2006-004 (BSC 2005 [DIRS 176636], Attachment 3, Administrative Building Description. IICD Volume 2 (DOE 2007 [DIRS 176810]), Section 3.1.16.3 calls for the repository to provide for the REMY administrative support, cafeteria, training capability, and records center. REMY training does not include supporting specialized training for railroad workers.]

9.5.2.1.4 Emergency Operations Center Area

The Administration Facility shall contain a dedicated EOC area that will be fully capable of functioning as an alternate TSC and as a near-site EOF if, or when, activated by the site emergency plan.

[BCP YMP-2006-004 [DIRS 176636], Attachment 3, Administrative Building Description; DOE O 151.1C 2005 [DIRS 176639], and RGA REG-CRW-RG-000455 (BSC 2007 [DIRS 184409]), Section 1.3.3 provides for the EOC outside the security area and within 10 miles of the TSC. NOTE: Although not within the repository design scope, an off-site EOF will be available outside of 10 miles from the TSC. The off-site location will be in Las Vegas, Nevada, within the Summerlin Office Complex. PO&PR (BSC 2008[DIRS 185008]), Section 2.7.6 provides a functional requirement for emergency response that is partially satisfied by the EOC.]

9.5.2.2 General Requirements

9.5.2.2.1 EOC Equipment

Dedicated computers and phone lines shall be provided for each of the EOC functions. Video-teleconference capability shall be provided for an EOC secure conference room.

[This is was included because the equipment will better facilitate management and operation of the EOC.]

9.5.2.3 Safety and Protection Requirements

9.5.2.3.1 Passive Fire Protection Features

The Administration Facility shall be provided throughout with passive fire protection in form of fire rated barriers, as determined in the FHA.

[Since the Administration Facility is functionally similar to other non-ITS surface facilities, the requirements are expected to be similar to the Site Fire Hazard Analysis (BSC 2007 [DIRS 181993]), performed for other non-ITS

surface facilities.]

9.5.2.3.2 Automatic Fire Protection Features

The Administration Facility shall be provided throughout with automatic fire suppression and automatic fire alarm and detection systems, as determined in the FHA.

[Since the Administration Facility is functionally similar to other non-ITS surface facilities, the requirements are expected to be similar to the Site Fire Hazard Analysis (BSC 2007 [DIRS 181993]), performed for other non-ITS surface facilities.]

9.5.2.3.3 Manual Fire Protection Features

The Administration Facility shall be provided throughout with portable fire extinguishers and manual fire alarm pull stations.

[Occupied facilities require fire protection support defined in NFPA codes and standards, as identified in the Site Fire Hazard Analysis (BSC 2007 [DIRS 181993]). Since the Administration Facility is a non-ITS facility, Regulatory Guide 1.189 [DIRS 155040], Section 3.4.1 providing for "Interior manual hose installation should be able to reach any location that contains, or could present a fire exposure hazard to, equipment important to safety with at least one effective hose stream" does not apply. Although a standpipe system may be identified as a design solution in the future, non-ITS facilities do not require Class III standpipes.]

9.5.2.3.4 Fire Resistant Materials

The Administration Facility shall be designed such that electrical cabling and other materials meet flame spread and other related requirements, as determined in the FHA.

[Since the Administration Facility is functionally similar to other non-ITS surface facilities, the requirements are expected to be similar to the Site Fire Hazard Analysis (BSC 2007 [DIRS 181993]), performed for other non-ITS surface facilities.]

9.5.2.3.5 Life Safety Provisions

The Administration Facility shall be designed to meet life safety provisions such as means of egress, emergency lighting, and other features, as determined in the FHA.

[Since the Administration Facility is functionally similar to other non-ITS surface facilities, the requirements are expected to be similar to the Site Fire Hazard Analysis (BSC 2007 [DIRS 181993]), performed for other non-ITS surface facilities.]

9.5.2.3.6 Administration Facility Access Control

Access control of personnel shall be instituted into and out of the Administration Building.

[10 CFR 73.51 (b)(2)(ii)[DIRS 181969] provides base access control requirements. DOE M 470.4-2 [DIRS 178562] Chapter IV.3b. addresses access control]

9.5.2.3.7 Occupant Notification

Local fire alarm occupant notification shall be provided throughout the entire facility originating the alarm. A fire zone alarm panel or graphic zone alarm panel shall be provided at the main entrance to major facilities. A manual fire notification method, such as manual fire alarm initiation devices, shall be provided at all normally occupied facilities.

[DOE O 420.1A [DIRS 159450], Contractor Requirement 4.2.2.6. The alarm panel transmits trouble, supervisory, and alarm signals to the Central Control Center and Fire, Rescue and Medical Facility for appropriate response.]

9.5.2.4 Miscellaneous Requirements

There are no identified requirements for this section. As requirements are identified in the future, they will be added.

9.5.3 Conformance Verification

Table 9-5. Administrative Facility Conformance Verification

Criterion		Preliminary Verification Method					
Number	Description	N/A	Analysis	Exam	Demo	Review	Test
9.5.2.1.1	Not Used	--	--	--	--	--	--
9.5.2.1.2	NRC Offices					X	
9.5.2.1.3	Administrative Offices					X	
9.5.2.1.4	Emergency Operations Center Area					X	
9.5.2.2.1	EOC Equipment					X	
9.5.2.3.1	Passive Fire Protection Features					X	
9.5.2.3.2	Automatic Fire Protection Features		X				
9.5.2.3.3	Manual Fire Protection Features					X	
9.5.2.3.4	Fire Resistant Materials					X	
9.5.2.3.5	Life Safety Provisions					X	
9.5.2.3.6	Administration Facility Access Control					X	
9.5.2.3.7	Occupant Notification					X	

9.6 Fire, Rescue, and Medical Facility

9.6.1 Overview

9.6.1.1 Introduction

The Fire, Rescue, and Medical Facility include fires, emergency medical, and occupational medical services.

9.6.1.2 System Classification

The Fire, Rescue and Medical Facility, which is part of the BOP Facilities, has been classified as non-ITS. The Fire, Rescue and Medical Facility does not include SSCs that are ITWI.

[Preclosure NSDB (BSC 2008 [DIRS 184200]), Appendix A, Table A-1 specifically provides the classification of the facility structure.]

9.6.2 Functional and Performance Requirements and Bases

9.6.2.1 Mission Requirements

9.6.2.1.1 Construct Emergency Response Facility

Provide an emergency response facility that includes a Fire, Rescue, and Medical Facility and helicopter pad. Space shall be provided in the emergency response facilities that includes the following:

- General management and site medical, rescue, and fire personnel offices
- Individual service requirements to be defined by the needs analyses
- Parking areas for fire, rescue, and medical equipment
- Materials and parts storage
- Fire department central dispatch center.

[MGR-RD [DIRS 177491], Section 3.2.5.E provides for a fire station but the specifics of construction are described in this requirement. PO&PR (BSC 2008 [DIRS 185008]), Section 2.7.6 provides a functional requirement for emergency response that is partially satisfied by this facility.]

9.6.2.1.2 Facility Use

The Fire, Rescue, and Medical Facility shall include a combined fire, emergency medical, and occupational medicine function. The Fire, Rescue, and Medical Facility shall be designed for continuous occupancy. The facility shall be sufficient to provide support 24-hours/day for the REMY facilities.

[This functional requirement provides the facility's function and clarifies the activities that will be housed in that facility. PO&PR (BSC 2008 [DIRS 185008]), Section 2.7.6 provides a functional requirement for occupational medical services that need a facility. IICD Volume 2 (DOE 2007 [DIRS 176810]), Section 3.1.16.3 calls for repository medical services and fire department support for the REMY support.]

9.6.2.2 General Requirements

9.6.2.2.1 Access Road

The Fire, Rescue, and Medical Facility shall have independent access to the repository from a multi-bay (drive through) vehicle structure, designed to house emergency vehicles, including fire trucks and ambulances. The Fire, Rescue, and Medical Facility shall be designed to accommodate a 40-ft city transit vehicle with a 28.5-ft wheelbase (representative of a fire pumper truck) in the vehicle bays.

[Independent access is expected to be through a separate gate or travel lane than that for pedestrian or normal vehicle traffic.]

9.6.2.3 Safety and Protection Requirements

9.6.2.3.1 Passive Fire Protection Features

The Fire, Rescue, and Medical Facility shall be provided throughout with passive fire protection in form of fire rated barriers, as determined in the FHA.

[Since the Fire, Rescue, and Medical Facility is functionally similar to other non-ITS surface facilities, the requirements are expected to be similar to the Site Fire Hazard Analysis (BSC 2007 [DIRS 181993]), performed for other non-ITS surface facilities.]

9.6.2.3.2 Automatic Fire Protection Features

The Fire, Rescue, and Medical Facility shall be provided throughout with automatic fire suppression and automatic fire alarm and detection systems, as determined in the FHA.

[Since the Fire, Rescue, and Medical Facility is functionally similar to other non-ITS surface facilities, the requirements are expected to be similar to the Site Fire Hazard Analysis (BSC 2007 [DIRS 181993]), performed for other non-ITS surface facilities.]

9.6.2.3.3 Manual Fire Protection Features

The Fire, Rescue, and Medical Facility shall be provided throughout with portable fire extinguishers and manual fire alarm pull stations.

[Occupied facilities require fire protection support defined in NFPA codes and standards, as identified in the Site Fire Hazard Analysis (BSC 2007 [DIRS 181993]). Since the Fire, Rescue, and Medical Facility *is a non-ITS facility, Regulatory Guide 1.189 [DIRS 155040], Section 3.4.1 providing for "Interior manual hose installation should be able to reach any location that contains, or could present a fire exposure hazard to, equipment important to safety with at least one effective hose stream" does not apply. Although a standpipe system may be identified as a design solution in the future, non-ITS facilities do not require Class III standpipes.]*

9.6.2.3.4 Fire Resistant Materials

The Fire, Rescue, and Medical Facility shall be designed such that electrical cabling and exposed materials meet flame spread and other related requirements, as determined in the FHA.

[Since the Fire, Rescue, and Medical Facility is functionally similar to other non-ITS surface facilities, the requirements are expected to be similar to the Site Fire Hazard Analysis (BSC 2007 [DIRS 181993]), performed for other non-ITS surface facilities.]

9.6.2.3.5 Life Safety Provisions

The Fire, Rescue, and Medical Facility shall be designed to meet life safety provisions such as means of egress, emergency lighting, and other features, as determined in the FHA.

[Since the Fire, Rescue, and Medical Facility is functionally similar to other non-ITS surface facilities, the requirements are expected to be similar to the Site Fire Hazard Analysis (BSC 2007 [DIRS 181993]), performed for other non-ITS surface facilities.]

9.6.2.3.6 Occupant Notification

Local fire alarm occupant notification shall be provided throughout the entire facility originating the alarm. A fire zone alarm panel or graphic zone alarm panel shall be provided at the main entrance to major facilities. A manual fire notification method, such as manual fire alarm initiation devices, shall be provided at all normally occupied facilities.

[DOE O 420.1A [DIRS 159450], Contractor Requirement 4.2.2.6. The alarm panel transmits trouble, supervisory, and alarm signals to the Central Control Center and Fire, Rescue and Medical Facility for appropriate response.]

9.6.2.3.7 Backup Power

In the event of loss of normal power, the Fire, Rescue, and Medical Facility essential loads shall be powered by the standby diesel generators.

[Standby diesel generators provide power to non-ITS systems and components in the event offsite power sources are interrupted.]

9.6.2.3.8 Medical Decontamination Area

The Fire, Rescue, and Medical Facility shall include a contamination cleaning room with independent capture tank and associated monitoring equipment.

[Considering biological, radiological, and hazardous chemical contaminants, this requirement is considered appropriate.]

9.6.2.3.9 Bloodborne Pathogen Controls

Engineering controls shall be included in the design of the medical facilities to prevent or minimize employee exposure to bloodborne pathogens.

[29 CFR 1910.1030(d)(2)(i) [DIRS 182679].]

9.6.2.4 Miscellaneous Requirements

9.6.2.4.1 Oil/Water Separator

An oil/water separator shall be provided at the Fire, Rescue, and Medical Facility to prevent oils from entering into the drainage system. The system shall include a sampling port at or near the discharge point.

[Although not specifically called out by regulation, based on an interpretation of 40 CFR 112.12 [DIRS 184243], which is implemented in the Non-Radioactive Waste Management System, the fuel oil system provides a specific risk of discharge that needs to be addressed.]

9.6.3 Conformance Verification

Table 9-6. Fire, Rescue, and Medical Facility Conformance Verification

Criterion		Preliminary Verification Method					
Number	Description	N/A	Analysis	Exam	Demo	Review	Test
9.6.2.1.1	Construct Emergency Response Facility					X	
9.6.2.1.2	Facility Use					X	
9.6.2.2.1	Access Road					X	
9.6.2.3.1	Passive Fire Protection Features					X	
9.6.2.3.2	Automatic Fire Protection Features		X				
9.6.2.3.3	Manual Fire Protection Features					X	
9.6.2.3.4	Fire Resistant Materials					X	
9.6.2.3.5	Life Safety Provisions					X	
9.6.2.3.6	Occupant Notification					X	
9.6.2.3.7	Backup Power					X	
9.6.2.3.8	Medical Decontamination Area					X	
9.6.2.3.9	Bloodborne Pathogen Controls					X	
9.6.2.4.1	Oil/Water Separator					X	

9.7 Craft Shop

9.7.1 Overview

9.7.1.1 Introduction

The Craft Shops, with the equipment/yard storage, include primary shop services for repository maintenance and repair operations and contain multiple craft work areas (i.e., for ironworkers, sheet metal workers, electricians), as well as equipment and materials areas.

9.7.1.2 System Classification

The Craft Shop, which is part of the BOP Facilities, has been classified as non-ITS. The Craft Shop does not include SSCs that are ITWI.

[Preclosure NSDB (BSC 2008 [DIRS 184200]), Appendix A, Table A-1 specifically provides the classification of the facility structure.]

9.7.2 Functional and Performance Requirements and Bases

9.7.2.1 Mission Requirements

9.7.2.1.1 Craft Shop

A Craft Shop shall be provided. This facility shall be sufficient to provide building and infrastructure maintenance support for the REMY facilities.

[MGR-RD [DIRS 177491], Section 3.2.5.E specifies a craft building shall be constructed. IICD Volume 2 (DOE 2007 [DIRS 176810]), Section 3.1.16.3 provide for the REMY support.]

9.7.2.2 General Requirements

9.7.2.2.1 Rigging Loft

The Craft Shop shall include a rigging loft with lift test capability.

[A rigging loft is a necessity for any site that supports lifting equipment. Since the repository will conduct significant numbers of heavy lifts, this is necessary. Housing the rigging loft with the craft personnel is industry practice.]

9.7.2.2.2 Eye Wash Station

The Craft Shop shall provide tepid water for eyewash and emergency shower stations where toxic or hazardous materials are present.

[Activities at the site require the availability of eyewash stations and shower facilities. The Craft Shop in particular is likely to house solvents and other materials.]

9.7.2.2.3 Equipment Storage Yard

The Craft Shop shall provide an adjacent, fenced and paved or concrete equipment storage yard area, for equipment staging or repair. This area shall support the heaviest gross vehicle weight projected to be in the inventory.

[Crafts will need space for working, laydown and other equipment staging needs. Locating these laydown areas adjacent to the Craft Shop is industry practice.]

9.7.2.2.4 Bulk Gas Supply

The Craft Shop shall provide space for a bulk gas system. This includes a compressed air system for powering air-driven tools.

[Craft Shop activities will require tool use, welding and other gases.]

9.7.2.2.5 Steam Cleaning

An area shall be provided outside the Craft Shop for steam cleaning equipment.

[Craft will have to clean and prepare equipment for use in the nuclear facilities. Material will be received with road grime. Vehicles will require cleaning. To locate the steam cleaning equipment outside of the Craft Shop is a common industry practice.]

9.7.2.2.6 All-Hands Meeting

The Craft Shop shall include a multi-use area for craft all-hands meetings.

[All personnel areas will need assembly areas for job briefings, training, and other congregational activities.]

9.7.2.3 Safety and Protection Requirements

9.7.2.3.1 Passive Fire Protection Features

The Craft Shop shall be provided throughout with passive fire protection in form of fire rated barriers, as determined in the FHA.

[The occupied facilities require fire protection support as defined in the Site Fire Hazard Analysis (BSC 2007 [DIRS 181993]).]

9.7.2.3.2 Automatic Fire Protection Features

The Craft Shop shall be provided throughout with automatic fire suppression and automatic fire alarm and detection systems, as determined in the FHA.

[Since the Craft Shop is functionally similar to other non-ITS surface facilities, the requirements are expected to be similar to the Site Fire Hazard Analysis (BSC 2007 [DIRS 181993]), performed for other non-ITS surface facilities.]

9.7.2.3.3 Manual Fire Protection Features

The Craft Shop shall be provided throughout with portable fire extinguishers and manual fire alarm pull stations, as determined in the FHA.

[Occupied facilities require fire protection support defined in NFPA codes and standards, as identified in the Site Fire Hazard Analysis (BSC 2007 [DIRS 181993]). Since the Craft Shop is a non-ITS facility, Regulatory Guide 1.189 [DIRS 155040], Section 3.4.1 providing for "Interior manual hose installation should be able to reach any location that contains, or could present a fire exposure hazard to, equipment important to safety with at least one effective hose stream" does not apply. Although a standpipe system may be identified as a design solution in the future, non-ITS facilities do not require Class III standpipes.]

9.7.2.3.4 Fire Resistant Materials

The Craft Shop shall be designed such that electrical cabling and exposed materials meet flame spread and other related requirements, as determined in the FHA.

[Since the Craft Shop is functionally similar to other non-ITS surface facilities, the requirements are expected to be similar to the Site Fire Hazard Analysis (BSC 2007 [DIRS 181993]), performed for other non-ITS surface facilities.]

9.7.2.3.5 Life Safety Provisions

The Craft Shop shall be designed to meet life safety provisions such as means of egress, emergency lighting, and other features, as determined in the FHA.

[Since the Craft Shop is functionally similar to other non-ITS surface facilities, the requirements are expected to be similar to the Site Fire Hazard Analysis (BSC 2007 [DIRS 181993]), performed for other non-ITS surface facilities.]

9.7.2.3.6 Occupant Notification

Local fire alarm occupant notification shall be provided throughout the entire facility originating the alarm. A fire zone alarm panel or graphic zone alarm panel shall be provided at the main entrance to major facilities. A manual fire notification method, such as manual fire alarm initiation devices, shall be provided at all normally occupied facilities.

[DOE O 420.1A [DIRS 159450], Contractor Requirement 4.2.2.6. The alarm panel transmits trouble, supervisory, and alarm signals to the Central Control Center and Fire, Rescue and Medical Facility for appropriate response.]

9.7.2.4 Miscellaneous Requirements

9.7.2.4.1 Oil/Water Separator

The Craft Shop shall include an oil/water separator to prevent oils from entering into the drainage system. The system shall include a sampling port at or near the discharge point.

[Although not specifically called out by regulation, based on an interpretation of 40 CFR 112.12 [DIRS 184243], which is implemented in the Non-Radioactive Waste Management System, the fuel oil system provides a specific risk of discharge that needs to be addressed.]

9.7.3 Conformance Verification

Table 9-7. Craft Shop Conformance Verification

Criterion		Preliminary Verification Method					
Number	Description	N/A	Analysis	Exam	Demo	Review	Test
9.7.2.1.1	Craft Shop					X	
9.7.2.2.1	Rigging Loft					X	
9.7.2.2.2	Eye Wash Station					X	
9.7.2.2.3	Equipment Storage Yard					X	
9.7.2.2.4	Bulk Gas Supply					X	
9.7.2.2.5	Steam Cleaning					X	
9.7.2.2.6	All Hands Meeting					X	
9.7.2.3.1	Passive Fire Protection Features					X	
9.7.2.3.2	Automatic Fire Protection Features					X	
9.7.2.3.3	Manual Fire Protection Features					X	
9.7.2.3.4	Fire Resistant Materials					X	
9.7.2.3.5	Life Safety Provisions					X	
9.7.2.3.6	Occupant Notification					X	
9.7.2.4.1	Oil/Water Separator					X	

9.8 Site Roadways

9.8.1 Overview

9.8.1.1 Introduction

The BOP road and access-way system shall provide roads, parking areas, and walkways for the repository facilities. The BOP road and access-way system shall be physically and functionally compatible with transportation equipment to accommodate the movement of personnel, equipment, supplies, waste packages, etc. The BOP road and access-way system shall be designed to handle traffic consistent with the cask receipt and return rates and to provide queuing areas for casks needed to respond to system upsets, such as surges in cask deliver and/or facility outages. The BOP road and access way system shall also provide for accessing the ventilation equipment at the subsurface shaft locations.

9.8.1.2 System Classification

The Site Roadways, which is part of the BOP Facilities, has been classified as non-ITS. The Site Roadways do not include SSCs that are ITWI.

[Preclosure NSDB (BSC 2008 [DIRS 184200]), Appendix A, Table A-1-specifically provides the classification of the roadways.]

9.8.2 Functional and Performance Requirements and Bases

9.8.2.1 Mission Requirements

9.8.2.1.1 BOP General Road Functions

The BOP road and access-way system shall provide roads, parking areas, and walkways for the repository facilities. The BOP road and access-way system shall be provided in a physically and functionally compatible with transportation equipment to accommodate the movement of personnel, equipment, supplies, waste packages, etc. The BOP road and access-way system shall be designed to handle traffic consistent with the cask receipt and return rates and to provide queuing areas for casks needed to respond to system upsets, such as surges in cask deliver and/or facility outages. The roads and access ways include the following services:

- Vehicular and pedestrian access to all required areas of the surface nuclear and supporting facilities during construction and operations
- Access to the surface nuclear and supporting facilities from off-site

- Parking and staging transportation equipment, vehicles, and buses
- Staging of transportation casks (truck) for delivery
- Transportation of construction equipment and materials
- Transportation of personnel during construction and operational periods.

[MGR-RD [DIRS 177491], Section 3.2.14.B. calls for direct truck access to the nuclear facilities. The rest of the detail is derived within Engineering. This criteria satisfies the road/facility portion of the PO&PR (BSC 2008 [DIRS 185008]), Section 2.7.4. The DOT reference is deleted as it is included in the PDC (BSC 2007 [DIRS 179641], Criterion 4.2.3.8. Curb ramps are deleted as it is included in PDC Criterion 4.2.3.6. The State of Nevada transportation requirements previously specified were eliminated as a duplicate of PDC 4.2.3.2.]

9.8.2.1.2 Surface Transportation Network

The surface transportation network for the North Portal area shall include road connections between the cask receipt security stations and the handling facilities.

[BCP YMP-2006-053 [DIRS 177483], Block 11, Page 6 of 1159. The IHF is contained within the North Portal and no longer needs separate mention.]

9.8.2.1.3 Truck Buffer Area

A truck buffer area shall be provided for the incoming materials, capable of accommodating 5 trailers.

[PO&PR (BSC 2008 [DIRS 185008]), Section 2.1.5 provides for a buffer.]

9.8.2.2 General Requirements

9.8.2.2.1 Facility Roadway Access

Due to the varied nature of activities conducted in the GROA and its supporting facilities, six different roadway uses shall be accommodated:

1) passenger car for daily commuting and travel between buildings by site employees throughout the day,
2) emergency vehicle access,
3) delivery vehicle access for small deliveries of materials and supplies,
4) buses for daily commuting of employees to and from the jobsite,
5) semi-trailer access for waste package and material and supplies delivery, and
6) site transporter access for transporting waste and materials and supplies within the GROA.

[Derived engineering requirement from functional needs.]

9.8.2.2.2 Passenger Car and Emergency Vehicle Access

All facilities shall accommodate passenger car and emergency vehicle access. This includes all buildings, storage areas, the aging pads, the North and South Portals, and the fuel depot.

[Derived engineering requirement from functional needs.]

9.8.2.2.3 Delivery Vehicle and Bus Access

Delivery vehicle and bus access shall be provided to the following facilities:

- WHF
- CRCFs
- Receipt Facility
- Low-Level Waste Facility
- HEMF
- WNNRF
- IHF
- Utilities Facility
- Administration Facility
- Craft Shops
- Fire, Rescue, and Medical Facility.

[Derived engineering requirement from functional needs.]

9.8.2.2.4 Semi-Trailer Access

Semi-trailer access shall be provided to the following facilities:

- WHF
- CRCFs
- Receipt Facility
- Low-Level Waste Facility
- HEMF
- WNNRF
- IHF
- Utilities Facility
- Warehouse/Central Receiving (located outside security area).

[Derived engineering requirement from functional needs. PO&PR (BSC 2008 [DIRS 185008]), Section 2.7.6 provides a functional requirement for warehousing and shipping and receiving services that must have a home. This is different that the WNNRF's nuclear waste receiving capability.]

9.8.2.2.5 DBV, Semi-Trailer

Road layouts and geometry of the access roads throughout the BOP facilities shall be designed for a tractor-trailer combination vehicle utilizing the American Association of State Highway and Transportation Officials (AASHTO) WB-67 interstate semi-trailer design vehicle while remaining on the finished surface of the roadway throughout performance of driving maneuvers.

[A Policy on Geometric Design of Highways and Streets (AASHTO 2004 [DIRS 175834]) provides for a total maximum length of the WB-67 Interstate Semi-trailer Design Vehicle of 75.5 ft. Although the IICD Volume 1 (DOE 2007 [DIRS 178792]) Figure B-1 indicates a 70-ft maximum length, legal-weight truck length, a WB-67 design basis vehicle is the closest AASHTO design vehicle that encompasses a 70-ft total length.]

9.8.2.2.6 DBV, Site Transporter

Road layouts and the geometry of the access roads used as a route for the site transporter shall accommodate a transporter capable of vertically lifting and transporting a 250-ton, 22-ft (264-in.) long, 12-ft (144-in.) diameter waste cask (i.e., AO). The transporter access roads shall be designed such that the transporter will remain within the prepared surface of the roadway throughout performance of driving maneuvers. To reduce damage to the roadway surface during turning, the transporter roadways should have a 35-ft minimum turning radius.

[Transportation, Aging, and Disposal Canister System Performance Specification (DOE 2007 [DIRS 181403]), Section 3.3.1(3) specifically provides dimensional criteria for an AO. The rest of the requirement text is a derived Engineering requirement based on the transporter capabilities.]

9.8.2.2.7 DBV, Passenger Car, Emergency Vehicle, and Delivery Vehicle

Road layouts and the geometry of the access roads throughout the BOP facilities shall be designed to accommodate passenger vehicles corresponding to an AASHTO passenger car design vehicle. The access roads shall also be designed to accommodate emergency vehicles defined in 9.6.2.2.1 and delivery vehicles corresponding in proportion and operating capability to an AASHTO single-unit truck design vehicle. The access roads shall be designed such that the passenger car, emergency vehicle, and delivery vehicle will remain within the single, assigned, vehicle lane of the roadway throughout performance of driving maneuvers.

[Anticipated ambulance and pumper truck emergency vehicles total length, width, and wheel base are larger than an SU Design Vehicle as presented in A Policy on Geometric Design of Highways and Streets (AASHTO 2004 [DIRS 175834]). Reference to the earlier emergency vehicle size is appropriate.].

9.8.2.2.8 DBV, Bus

Road layouts and geometry of the access roads used as a bus route to drop off and pick up site personnel throughout the BOP facilities shall be designed to accommodate bus traffic corresponding to an AASHTO BUS-45 intercity bus design vehicle. The bus route access roads shall be designed such that the bus will remain within the finished surface of the roadway throughout performance of driving maneuvers.

[Current commuter buses servicing the existing YMP facilities correspond to the BUS-45 Design Vehicle as presented in A Policy on Geometric Design of Highways and Streets (AASHTO 2004 [DIRS 175834]). Future

commuter buses for servicing the project are expected to be comparable].

9.8.2.2.9 GROA Access Road

A new two-lane road from Highway 95 (in the vicinity of Lathrop Wells) to the North Portal pad shall be designed and constructed. This road, as designed and constructed, shall use existing unpaved road alignments to the maximum extent possible.

[MGR-RD [DIRS 177491], Section 3.2.5.A.]

9.8.2.2.10 Truck Dimensions

The BOP facilities shall be designed to receive truck-based transportation casks containing SNF and HLW with the following maximum characteristics:

- LWT with a combined legal weight of the truck/cask carrier not exceeding a tandem axle gross weight of 34,000 lb and an overall gross weight of 80,000 lb.
- OWT with the combined weight of the truck/cask carrier being greater than 80,000 lbs gross vehicle weight, but not more than 90,000 to 105,000 lbs depending on the particular state transited.
- LWT or OWT flatbed trailers with a maximum width of 102 in.
- LWT or OWT flatbed trailers with a maximum length of 53 ft.

[TSRD (DOE 2006 [DIRS 181305] Heavy-haul vehicles have been eliminated. (IICD Volume 1 (DOE 2007 [DIRS 178792], Section 5.1). The waste packages are transported by rail as they are too heavy for road transport. IICD Volume 2 (DOE 2007 [DIRS 176810]), Section 3.1.10 provides trailer dimensions for the LWT and OWT. A state may not limit the length of a semitrailer in a truck tractor-semitrailer combination to less than 48 ft or less than a grandfathered length. Although the grandfathered length limit is 53 ft for the State of Nevada, approximately half of the remaining states limit trailer length to 48 ft. Repository auxiliary equipment and parking area interfaces are currently bounded by the repository designs for the potential generic building doors and setbacks and are not shown separately.]

9.8.2.2.11 Access Road to Rail Equipment Maintenance Yard

The BOP facilities will re-align, upgrade, and pave the current dirt access road from H-Road to the C-Wells to serve as the primary access road to the REMY. The interface between the repository and REMY is at coordinates N 761,125 and E 574,158 at an elevation of 3,659.00 ft.

[GROA/REMY Internal Constraints (BSC 2007 [DIRS 183653]), Table 2.1-1, IC-8. The exact location of the access road tie-in will be determined as the layout develops for the Site Plan.]

9.8.2.2.12 Rail Service Road to Rail Equipment Maintenance Yard

The BOP facilities will provide for a rail service road from the GROA to the REMY. The interface between the repository and REMY is at coordinates (a) Northing N 760,084.2 and Easting E 572,392.4 and (b) Northing N 760,132.9 and Easting E 572,498.8, at elevations of 3,659.00 ft.

[GROA/REMY Internal Constraints (BSC 2007 [DIRS 183653]), Table 2.1-1, IC-3. The exact location of the access road tie-in will be determined as the layout develops for the Site Plan. This provides two parallel maintenance / service roads to serve both east and west rail lines coming from the REMY to Gate 30-B. The west road will also serve as access to the GROA Water Treatment Facility located at the C-Wells. The interface points of the roads are located approximately 25 ft south of the North Portal West Loop.]

9.8.2.3 Safety and Protection Requirements

There are no identified requirements for this section. As requirements are identified in the future, they will be added.

9.8.2.4 Miscellaneous Requirements

There are no identified requirements for this section. As requirements are identified in the future, they will be added.

9.8.3 Conformance Verification

Table 9-8. Site Roadways Conformance Verification

Criterion		Preliminary Verification Method					
Number	Description	N/A	Analysis	Exam	Demo	Review	Test
9.8.2.1.1	BOP General Road Functions					X	
9.8.2.1.2	Surface Transportation Network					X	
9.8.2.1.3	Truck Buffer Area					X	
9.8.2.2.1	Facility Roadway Access					X	
9.8.2.2.2	Passenger Car and Emergency Vehicle Access					X	
9.8.2.2.3	Delivery Vehicle and Bus Access					X	
9.8.2.2.4	Semi-Trailer Access					X	
9.8.2.2.5	DBV, Semi-Trailer					X	
9.8.2.2.6	DBV, Site Transporter					X	
9.8.2.2.7	DBV, Passenger Car, Emergency Vehicle and Delivery Vehicle					X	
9.8.2.2.8	DBV, Bus					X	
9.8.2.2.9	GROA Access Road					X	
9.8.2.2.10	Truck Dimensions					X	
9.8.2.2.11	Access Road to Rail Equipment Maintenance Yard					X	
9.8.2.2.12	Rail Service to Rail Equipment Maintenance Yard					X	

9.9 Site Railways

9.9.1 Overview

9.9.1.1 Introduction

The site railways will be able to receive transportation casks. Transportation casks and their carriers will be received at the interface with the Nevada Transportation System. The railways will include passages through the GROA security gates and any siding or buffer areas. The rail yard will have a cask buffer area to maintain a cask inventory. The railways will also include track for moving the transportation casks/carriers into the processing facilities. The site railway also provides for moving loaded waste packages from the nuclear processing facilities into the Subsurface Facility and the interface with the Emplacement and Retrieval equipment rail system.

9.9.1.2 System Classification

The Site Railways, which are part of the BOP Facilities, have been classified as non-ITS. The rails for commercial railcars, surface rails for the TEV are non-ITS. The Site Railways do not include SSCs that are ITWI.

[Preclosure NSDB (BSC 2008 [DIRS 184200]), Appendix A, Table A-1-specifically provides the classification of the site railways.]

9.9.2 Functional and Performance Requirements and Bases

9.9.2.1 Mission Requirements

9.9.2.1.1 Site Rail Access

Site rail access shall be available to meet a receipt ramp-up rate consistent with that described in Section 2.2.1.2.

[BCP YMP-2006-053 [DIRS 177483], Block 11, Page 12 of 1159. Although, the throughput requirements are specified in CRD (DOE 2007 [DIRS 182960]), they do not constitute a specific requirement for the rail system.]

9.9.2.1.2 Rail Carrier Size

The BOP facilities shall be designed to receive rail cask/carriers with dimensions less than or equal to those of AAR Plate F clearance dimensions. Rail cask/carriers with dimensions greater that Plate F clearance dimensions may require special handling.

[IICD Volume 1 (DOE 2007 [DIRS 178792]), Section 7.3, Table 1 and Appendix C, Figure C-1. The Plate F dimensions are obtained from AAR 2004 [DIRS 169910].]

9.9.2.1.3 Railroad Shipments

The BOP facilities shall be designed to receive transportation casks containing SNF and HLW by directly receiving:

1. Railroad shipments made under the AAR standard of unrestricted interchange (AAR 2004 [DIRS 169910].
2. The transportation cask system (including impact limiters, tie-downs, and other related transportation equipment) shall be compatible with AAR Plate F clearance dimensions.
3. The combined railcar/cask carrier (gross railcar, cask, skid, and impact limiters) shall not exceed 65,750 lb gross weight per axle (e.g., 263,000 lb gross weight for a 4-axle railcar, 394,500 lb for a 6-axle railcar, or 526,000 lb for an 8-axle railcar).
4. The maximum combined railcar/cask carrier weight for shipments of naval SNF shall not exceed 789,000 lb.
5. Cask railcars having a maximum width of 128 in.
6. Cask railcars having a maximum length of 90 ft.
7. Cask railcars having a coupler-to-coupler distance of 93 ft 4 in. (based on a review of rail industry rolling stock)

[IICD Volume 1 (DOE 2007 [DIRS 178792]), Section 7.3, Table 1 and Appendix C, Figure C-1. IICD Volume 2 (DOE 2007 [DIRS 176810]), Section 3.1.10 provides Items 5-7. Although IICD Volume 2 refers to a 1992 version of AAR, the repository will utilize AAR 2004. The Plate F dimensions are obtained from and AAR standards refer to AAR 2004 [DIRS 169910].]

9.9.2.1.4 General Function

The site railways shall be designed as a heavy-haul, freight railroad that will be operated at low speeds. The reliability and safety of the track shall be of primary importance. The railways shall be divided into two distinct rail systems:

(1) standard gage rail shall be provided to accommodate delivery and onsite transport of transportation casks and equipment, waste packages, TAD canisters and site supplies and
(2) crane rail will accommodate transport of waste packages from the site facilities to the emplacement drifts.

[IICD Volume 2 (DOE 2007 [DIRS 176810]), Section 3.1.16.2. Earthwork required for the development of the pad for the GROA facilities will also include the onsite rail (GROA rail yard) and associated standard gage trackage area. Industry practice to utilize crane rail, which enhances stability in transporting. The site railways will be utilized to receive the empty canisters and other components into the WNNRF as the canisters will exceed the design basis vehicle specification in Criterion 9.8.2.2.6.]

9.9.2.1.5 Surface Transportation Network

The surface transportation network for the North Portal area shall include rail connections between the cask receipt security stations and the handling facilities.

[BCP YMP-2006-053 [DIRS 177483], Block 11, Page 6 of 1159. The IHF is contained within the North Portal and no longer needs separate mention.]

9.9.2.1.6 Surface Transportation Routes

A surface transportation route shall be provided from the IHF to the other North Portal surface facilities so that naval SNF waste packages can be disposed in the emplacement panels should the IHF remain in operations for the long-term.

[BCP YMP-2006-053 [DIRS 177483], Block 11, Page 7 of 1159.]

9.9.2.1.7 TAD Systems

The Site Railways shall be designed to accommodate the receipt of TAD canisters and TAD aging overpacks into the BOP and on into the WNNRF or associated warehouse facilities and the TAD transportation casks systems into BOP and on into the nuclear facilities. The TAD canisters and transportation cask systems are described by the *Transportation, Aging, and Disposal Canister System Performance Specification (DOE 2007 [DIRS 181403])*

[CRD (DOE 2007 [DIRS 182960]), Section 3.2.1L specifically provides direction to comply with the TAD specification. The allocation to the BOP was provided in Criterion 2.2.1.11. The site roadways will not be utilized to receive the empty canisters and other components into the WNNRF as they will exceed the design basis vehicle specification in Criterion 9.8.2.2.6.]

9.9.2.1.8 Functional Compatibility

Site railroads and facilities shall be arranged in a physically and functionally compatible manner to accommodate movement of vehicles and transporters.

[PO&PR (BSC 2008 [DIRS 185008]), Section 2.7.4.]

9.9.2.1.9 Rail Lines to Rail Equipment Maintenance Yard

The BOP facilities shall provide for a west and an east rail line from the GROA to the REMY. The interface coordinates between the repository and REMY for the WEST line are at Northing N 760,096.1 and Easting E 572,431.0 at an elevation of 3,659.00 ft. The interface coordinates between the repository and REMY for the EAST line are at Northing N 760,096.2 and Easting E 572,458.5 at an elevation of 3,659.00 ft.

[GROA/REMY Internal Constraints (BSC 2007 [DIRS 183653]), Table 2.1-1, IC-1 and IC-2. The interface point of the both rails is located approximately 25 ft south of the North Portal West Loop.]

9.9.2.2 General Requirements

9.9.2.2.1 Rail Car Buffer Area

A rail car buffer area with a capacity to stage 25 standard gage rail cars loaded with transportation casks shall be provided within the security area of the repository. A buffer area shall be provided for the incoming materials, capable of accommodating 25 rail cars.

[IICD Volume 2 (DOE 2007 [DIRS 176810]), Section 3.1.14 requires as much space as determined are needed. PO&PR (BSC 2008 [DIRS 185008]), Section 2.1.5 identified how much is needed and provides for a buffer of 25 rail cars.]

9.9.2.2.2 Facility Railway Access

All rail-based transport entering the security area shall pass through a cask receipt security station and rail car buffer area prior to transport to other facilities. Crane-gage rail access shall be provided from the IHF and CRCFs to the North Portal and HEMF. Standard gage access shall be provided from the cask receipt and rail car buffer area to the:

- WHF
- CRCFs
- Receipt Facility
- WNNRF
- IHF

[Derived engineering requirement based on separation of the waste handling facilities. Although the IHF previously had a separate truck buffer, the inclusion of the IHF in the IOC negates this need.]

9.9.2.2.3 DBV, Standard Gage Rail Car

The standard gage rail system shall be designed for a rail car with the following minimum specifications:

- 90-ft total length (86-ft, 4.5-in. over pulling faces)
- 789,000 lbs total combined weight
- 55-ft truck centers
- 17-ft height from top of rail
- 16-ft width opening in building doors

- And fits within an 18-ft width opening in facility gates.

[IICD Volume 1 (DOE 2007 [DIRS 178792]), Section 7.5 and Figures B-2 and C-1. Although the IICD provided many of the specifics, the heaviest weight is based on the naval cask/conveyance.]

9.9.2.2.4 Crane Rail Specification

The crane rail system shall be designed for a crane rail vehicle described on the *Emplacement and Retrieval Transport and Emplacement Vehicle Mechanical Equipment Envelope*, 800-MJ0-HE00-00101-000 REV 00B (BSC 2007 [DIRS 183353]) (TEV MEE) with the following minimum rail specifications:

- 11-ft center-to-center rail separation or span (this is a non standard gage)
- 200-ft minimum turning radius
- 2.5% maximum grade.

[The 11-ft center-to-center rail separation or span *was included as a controlled parameter with BCP YMP-2006-060 [DIRS 177878] for the TEV. Although this statement was initially written as an 11-ft gage, that terminology was not compatible with the gage definition of distance between the rails, thus requiring this clarification. Although the initial TEV parameters of 40 ft long and 350 tons were ~~are~~ best current judgment at the time, the TEV MEE illustrates that a conservatively large estimate for the TEV size was significantly less than initially provided for. Since the initial values required a significantly larger rail system design, this change effectively reduces the excess design margin associated with the initial specifications. CBCN007 to Revision 001 provided this change.]*

9.9.2.2.5 TEV Access

TEV access shall be provided to the following facilities:

- CRCFs
- HEMF
- IHF
- North Portal.

[Derived engineering requirement from functional needs.]

9.9.2.3 Safety and Protection Requirements

There are no identified requirements for this section. As requirements are identified in the future, they will be added.

9.9.2.4 Miscellaneous Requirements

There are no identified requirements for this section. As requirements are identified in the future, they will be added.

9.9.3 Conformance Verification

Table 9-9. Site Railways Conformance Verification

Criterion		Preliminary Verification Method					
Number	Description	N/A	Analysis	Exam	Demo	Review	Test
9.9.2.1.1	Site Rail Access					X	
9.9.2.1.2	Rail Carrier Size					X	
9.9.2.1.3	Railroad Shipments					X	
9.9.2.1.4	General Function					X	
9.9.2.1.5	Surface Transportation Network					X	
9.9.2.1.6	Surface Transportation Routes					X	
9.9.2.1.7	TAD Systems					X	
9.9.2.1.8	Functional Compatibility					X	
9.9.2.1.9	Rail Lines to Rail Equipment Maintenance Yard					X	
9.9.2.2.1	Rail Car Buffer Area					X	
9.9.2.2.2	Facility Railway Access					X	
9.9.2.2.3	DBV, Standard Gage Rail Car					X	
9.9.2.2.4	Crane Rail Specification					X	
9.9.2.2.5	TEV Access					X	

9.10 Remaining BOP Facilities

9.10.1 Overview

9.10.1.1 Introduction

The remaining offsite facilities include the visitor center, Offsite Training Testing Facility, utility facilities, and safeguards and security facilities including Gate 510 facilities. The visitor center shall provide space for 100 concurrent visitors. The safeguards and security facilities include a group of individual areas (the central security station, cask receipt security station, the north perimeter security station) that provide space and layout to accommodate the security staff in the performance of their required functions. The utility facilities include a group of individual areas that provide functional space for plant services; potable water, electrical power distribution systems; electrical support systems; fire water facilities; storm water retention; an evaporation pond, water treatment facility; and a cooling tower. The Helicopter Pad shall provide functional space for the evacuation of medical emergency victims.

The basic physical services provided shall be fleet management, laundry services, shipping and receiving services, janitorial services, warehousing, landscape maintenance, emergency response, occupational medical services, and occupational exposure assessment (PO&PR (BSC 2008 [DIRS 185008]), Section 2.7.6).

9.10.1.2 System Classification

The flood protection features of the BOP Facilities have been classified as ITS. The remaining BOP Facilities, including the low-level waste, security, utilities, emergency response, offsite, materials and consumables, maintenance and repair, transportation, BOP construction and the remaining infrastructure facilities, have been classified as non-ITS. The BOP Facilities do not include SSCs that are ITWI.

[Preclosure NSDB (BSC 2008 [DIRS 184200]), Appendix A, Table A-1 specifically provides the classification of the facility structures including the low-level waste facility.]

9.10.2 Functional and Performance Requirements and Bases

9.10.2.1 Mission Requirements

9.10.2.1.1 Annual Receipt Rates

The BOP facilities shall be capable of receiving transportation casks containing SNF and HLW, mostly by rail to support the repository at the system operating conditions and receipt rates as specified below:

1. To satisfy the Initial Operating Capability, in the first year of operations, the repository shall:
   a. Accept and receive 400 MTHM commercial SNF and HLW
   b. Accept and receive at least 3 naval SNF canisters
   c. Accept and receive 66 DOE SNF canisters and 193 DHLW canisters.
2. During years 2 through 4 of operations, the repository shall cumulatively:
   a Accept and receive at least 3,800 MTHM commercial SNF and HLW
   b. Accept and receive at least 15 naval SNF canisters
   c. Accept and receive at least 257 DOE SNF canisters and 1,143 DHLW canisters.
3. To satisfy the Full Operating Capability, in year five, of operations, the repository shall:
   a. Accept and receive 3,000 MTHM commercial SNF and HLW annually
   b. Accept and receive at least 15 naval SNF canisters annually (See Note)
   c. Accept and receive 179 DOE SNF canisters and 763 DHLW canisters annually.

NOTE: NNPP activities can prepare up to 24 naval SNF canisters annually for shipment to the repository. For design purposes, this value (24) should be used for maximum receipt rates of naval SNF canisters.

[MGR-RD [DIRS 177491], Section 3.1.1.J and 3.1.1.K, and CRD (DOE 2007 [DIRS 182960]), Section 3.2.1B and 3.2.1C. IICD Volume 2 (DOE 2007 [DIRS 176810), Section 3.1.2.1 also contains this information.]

9.10.2.1.2 SNF Ratio

The BOP facilities shall be designed for the expected commercial SNF receipts identified in Section 9.10.2.1.1 in each year of operations, such that at least 90% of the SNF planned for acceptance that year is received in TAD canisters and no more than 10% is received as uncanistered assemblies in a cask or a DPC.

[MGR-RD [DIRS 177491], Section 3.1.1.K and CRD (DOE 2007 [DIRS 182960]), Section 3.2.1C.2. Although the CRD requires a 90/10 split, the design of individual facilities should provide for a maximum credible capability for variations in the waste stream. Since the concept of the TAD-based canister handling is new, it is reasonable to provide for some change in design capability. Different capabilities will be defined separately. IICD Volume 2 (DOE 2007 [DIRS 176810), Section 3.1.2.1 also contains this information.]

9.10.2.1.3 Cask Turnaround Time

The BOP shall be designed for a target transportation cask turnaround time from receipt from the national transportation system to return to the national transportation system less than 7 days. The repository shall ensure a turnaround for naval transportation casks as specified in the IICD Volume 1 (DOE 2007 [DIRS 178792]), Section 9.4.

[PO&PR (BSC 2008 [DIRS 185008]), Section 2.1.3. This would also apply to the other nuclear handling facilities.]

9.10.2.1.4 Electrical Transmission Line

Off-site power at 138 kV shall be provided to the North Portal pad.

[MGR-RD [DIRS 177491], Section 3.2.5.D. Although this document describes the transmission line in more detail, it is not being provided by the repository facilities.]

9.10.2.1.5 Utility Support Facilities

Provide utility facilities for operational, support, and infrastructure services. Provide utility facilities and space that incorporate the following systems or facilities, as well as maintenance and/or upgrades for:

- Utility distribution, including power
- Hot and chilled service water
- Potable water
- Telephone
- Sewage collection and processing
- Fire protection systems
- Plant services systems equipment and components

- Industrial HVAC systems, electrical power distribution, and electrical support equipment and components

[MGR-RD [DIRS 177491], Section 3.2.5.E only provides for the provision of associated utilities. The rest of the specifics are generally, acceptable derived requirements. IICD Volume 2 (DOE 2007 [DIRS 176810]), Section 3.1.16.3 provide for the REMY land line telephone system support.]

9.10.2.1.6 Offsite Facility

Provide offsite facilities that include the visitor center, Offsite Training Testing Facility, and Gate 510 facilities. The visitor center shall provide space for 100 concurrent visitors. Gate 510 will include a new modular structure and associated utilities, which will allow badging, access control, training verification, and work location tracking.

[MGR-RD [DIRS 177491], Section 3.2.5.B. BOP will ensure available for the repository.]

9.10.2.1.7 BOP Infrastructure

BOP facilities shall provide infrastructure to support construction activities to support facilities at the South Portal, North Portal, North Construction Portal, production and fabrication areas, roads and pads at the intake and exhaust shafts, and materials areas.

[PO&PR (BSC 2008 [DIRS 185008]), Section 2.7.1.]

9.10.2.1.8 Vehicle Maintenance and Motor Pool

The BOP facilities shall provide vehicle maintenance and motor pool. These facilities shall be sufficient to support the Nevada Transportation function.

[PO&PR (BSC 2008 [DIRS 185008]), Section 2.7.6. provides a functional requirement for fleet management that is physically satisfied by this requirement. This requirement supports the repository operations. The large area covered by the GROA and other construction areas require vehicles, which will require maintenance. IICD Volume 2 (DOE 2007 [DIRS 176810]), Section 3.1.16.3 provide for the REMY support.]

9.10.2.1.9 Transportation Cask Personnel Barrier Removal

BOP Facilities shall provide the capability to remove, store, and reinstall personnel barriers at the security inspection area at the point of entry into the buffer areas.

[IICD Volume 2 (DOE 2007 [DIRS 176810]), Sections 3.1.12 discusses this capability. Portable cranes are discussed but should not be mandated. This does not negate the need to have the nuclear facilities provide equipment for this capability.]

9.10.2.2 General Requirements

9.10.2.2.1 BOP Utility Space

BOP facilities shall provide utility space on site to accommodate layout and structure for the plant services system, subsystems, and components. This provides space required for utilities between BOP support facilities and processing facilities:

1. Space for a water storage tank shall be provided in the BOP. The site area shall supply raw water for the initial supply and dedicated makeup to the fire water system, deionized water system, potable water system, and cooling tower water.
2. Space shall be provided in the BOP for a diesel fuel distribution line in the utility building to supply fuel for hot water boilers, and for fuel oil tanks within the security fenced area for fire pumps and ITS and standby diesel generators.
3. Space shall be provided in the BOP for gasoline tanks, vaporizers, and pipe distribution lines with isolation valves, including a back flow preventer where service gas tanks are located near the building being served.
4. Space shall be provided in the BOP for cooling towers equipped with circulation pumps, controls, and ancillary equipment near the utility building to supply cooling water to the chiller's condensers and air compressors casing and oil coolers.
5. Utility services shall extend to each of the processing and support facilities, as necessary, to support their operations.
6. Space shall be provided in the BOP for water storage tanks, fire pump houses, suppression system piping, and system control panels

[MGR-RD-[DIRS 177491], Section 3.2.5.E calls for utilities. This requirement supports space required for the plant services. Emergency diesel generators changed to ITS diesel generators in accordance with Repository System Codes (BSC 2007 [DIRS 184183]).]

9.10.2.2.2 Electrical Facilities Space

BOP facilities shall provide space for the main switchyard power, standby power, and ITS power as follows:

1. Space shall be provided in the BOP facilities for electrical power distribution equipment, such as switchgear or load centers and transformers, as required, by the electrical loads in the facility.
2. Space shall be provided in the BOP facilities for low voltage components, lighting transformers, and electrical panels.
3. Space shall be provided in the BOP facilities for motor control centers located near the HVAC air handling units and other mechanical equipment requiring electrical power.

[MGR-RD [DIRS 177491], Section 3.2.5.E only provides for the provision of associated utilities. Emergency power changed to ITS power in accordance with Repository System Codes (BSC 2007 [DIRS 184183])]

9.10.2.2.3 Ingress and Egress Capability

The BOP facilities shall provide ingress and egress with the applicable elements identified in NFPA 101 [DIRS 177965]. Provide gates and access points that allow pedestrian and vehicular traffic during construction and operational periods. Provide gates and access points that allow emergency service vehicles (fire, ambulance, security patrol) to arrive at any surface facilities emergency scene.

[NFPA 101 provides specifics for egress. 29 CFR 1910.34, .35, .36, and .37 endorse NFPA 101 as sufficient to demonstrate compliance with exit route provisions.]

9.10.2.2.4 Groundwater Capacity

No more than 430 acre-ft of groundwater are available on a calendar year basis from J-12/J-13 wells, C wells, and VH-1 wells. The water from these wells shall only be put to beneficial use within the permitted place of use. The GROA activities and facilities shall be designed, constructed, and operated so that no more than 430 acre-ft of water are required for use during any calendar year. This total shall include water needs for construction and operation occurring within Hydrographic Basin 227A, and other OCRWM activities occurring within the permitted place of use.

[DOE applications 63263 through 63267 for Permits to Appropriate the Public Waters of the state of Nevada were submitted to the State Engineer in 1997 for a total of 430 acre-ft annually (Dixon 1997 [DIRS 170737], [DIRS 170738], [DIRS 170739], [DIRS 170740], [DIRS 170741]). The combined total duty of all five applications to appropriate groundwater shall not exceed 430 acre-feet annually. This is also provided in Criterion 24.2.2.1.1.]

9.10.2.2.5 Deleted

[Plant Heating and Cooling System requirements are in Chapter 21.]

9.10.2.2.6 LLW Facility

The repository shall provide a LLW Facility for the radiological waste management system, subsystems, and components.

[This facility is required to support repository activities and therefore needs appropriate space. System requirements are included in Chapter 30.]

9.10.2.2.7 Deleted

[Plant Services requirements are provided in Chapter 24.]

9.10.2.2.8 Deleted

[Electrical Power System and Electrical Supports System requirements are included in Chapters 16 and 17, respectively.]

9.10.2.2.9 Deleted

[DCMIS criteria are provided in Chapter 26.]

9.10.2.2.10 IICD Compliance

The design of the BOP facilities shall comply with the agreements established under the IICD Volume 1 (DOE 2007 [DIRS 178792]) and IICD Volume 2 (DOE 2007 [DIRS 176810]), Section 3.1.10 to ensure compatibility between transportation equipment (e.g., transporters) and transported items (e.g., casks and canisters) with mechanical and envelope interfaces.

Railroad shipment dimensions include:

1. Railroad shipments made under the AAR standard of unrestricted interchange (AAR 2004 [DIRS 169910].
2. The transportation cask system (including impact limiters, tie-downs, and other related transportation equipment) shall be compatible with AAR Plate F clearance dimensions.
3. The combined railcar/cask carrier (gross railcar, cask, skid, and impact limiters) shall not exceed 65,750 lb gross weight per axle (e.g., 263,000 lb gross weight for a 4-axle railcar, 394,500 lb for a 6-axle railcar, or 526,000 lb for an 8-axle railcar).
4. The maximum combined railcar/cask carrier weight for shipments of naval SNF shall not exceed 789,000 lb.
5. Cask railcars having a maximum width of 128 in.
6. Cask railcars having a maximum length of 90 ft.
7. Cask railcars having a coupler-to-coupler distance of 93 ft 4 in. (based on a review of rail industry rolling stock)

Truck-based transportation casks containing SNF and HLW on trucks and trailers shall have the following maximum characteristics:

- LWT with the combined legal weight of the truck/cask carrier not exceeding a tandem axle gross weight of 34,000 lb and an overall gross weight of 80,000 lb.
- OWT with the combined weight of the truck/cask carrier being greater than 80,000 lbs gross vehicle weight, but not more than 90,000 to 105,000 lbs depending on the particular state transited.
- LWT or OWT flatbed trailers with a maximum width of 102 in.
- LWT or OWT flatbed trailers with a maximum length of 53 ft.

[As sequenced through MGR-RD [DIRS 177491], Section 3.1.2.B, which references CRD (DOE 2007 [DIRS 182960]), Section 3.2.1H.2. IICD Volume 1 (DOE 2007 [DIRS 178792]), Section 7.3, Table 1 and Appendix C, Figure C-1 and IICD Volume 2 (DOE 2007 [DIRS 176810]), Section 3.1.10. Although IICD Volume 2 refers to a 1992 version of AAR, the repository will utilize AAR 2004. BOP interfaces with the transportation system components, but not with the waste forms. A state may not limit the length of a semitrailer in a truck tractor-semitrailer combination to less than 48 ft or less than a grandfathered length. Although the grandfathered length limit is 53 ft for the State of Nevada, approximately half of the remaining states limit trailer length to 48 ft.]

9.10.2.2.11 Technology Capabilities

The BOP facilities shall be designed to accommodate TAD canisters; dual-purpose, DOE SNF Standardized, HLW, and naval SNF canisters; Multi-Canister Overpacks; and limited quantities of bare SNF assembly cask systems.

[MGR-RD [DIRS 177491], Section 3.1.1.O and CRD (DOE 2007 [DIRS 182960]), Section 3.2.1F.]

9.10.2.2.12 Solid Waste Capacity

The BOP facilities shall provide for efficient and safe collection, and for the interim storage of the anticipated volume of solid waste to be generated within the facility. This space shall be easily cleanable and maintainable.

[40 CFR 243.200-1(d) [DIRS 184246].]

9.10.2.2.13 Permanent and Temporary Fencing

Permanent and temporary fences shall be provided as required. Fencing for a variety of purposes shall be provided, including controlling access, segregating functions such as construction and operations, isolating material store areas, etc.

[PO&PR (BSC 2008 [DIRS 185008]), Section 2.7.7.]

9.10.2.2.14 Transportation Facilities Utility Feeds

The Rail Equipment Maintenance Yard shall be provided with sufficient capacity and connections for utility feeds from the GROA (power and water as a minimum).

[IICD Volume 2 (DOE 2007 [DIRS 176810]), Section 3.1.16. DOE CO Letter 07-020 (Hamilton-Ray 2007 [DIRS 181033] has directed BSC to update the BOD to include requirements for the Rail Equipment Maintenance Yard and the Cask Maintenance Facility located outside of the GROA. The capacity for the power requirement is identified in Chapter 16 and the water requirement is identified in Chapter 24.]

9.10.2.3 Safety and Protection Requirements

9.10.2.3.1 Safeguards and Security Facilities

Provide space in the BOP facilities for layout and structures of safeguards and security facilities, including equipment, equipment storage and lockers. BOP S&S facilities shall be developed sufficient to support 24-hour/day functions of the Nevada Transportation facilities for site security personnel and badging.

[10 CFR 73.21(a) [DIRS 181969] addresses safeguards & security information to be protected. IICD Volume 2 (DOE 2007 [DIRS 176810]), Section 3.1.16.3 provides for REMY support.]

9.10.2.3.2 Access Control Point

The security facilities shall include space for access control point guard stations for personnel and vehicular traffic. Provide functional space for the security facilities that include the central security station (30A), north perimeter security station (30C), cask receipt security station (30B), and administration security stations (north [65B] and south [65A]).

The security stations that act as an access control point into the protected area shall be controlled by an individual isolated within a bullet-resisting structure. The security personnel shall have the capability to control access of vehicles, trains, SNF, HLW and other materials into and out of the protected area. Security personnel shall be provided the capability to detect weapons, explosives, and other contraband items, and process employees and visitors separately. Entry and exit traffic shall be separated by physical barriers. The access control function shall also control access to areas within the repository

[10 CFR 73.51 (b)(2)(ii) [DIRS 181969] provides base access control requirements. DOE M 470.4-2 [DIRS 178562] Chapter VIII specifies access controls.]

9.10.2.3.3 Physical Protection Capability

The BOP shall contribute to providing the physical protection against radiological sabotage, or against theft of SNM, or against both. The BOP shall contribute to maintaining physical security in accordance with security plans approved by the NRC.

[10 CFR 73.40 [DIRS 181969] and DOE M 470.4-2 [DIRS 178562] Chapter II.1.]

9.10.2.3.4 Nuclear Material Protection

The BOP shall contribute to the physical protection, which will have as its objective to provide high assurance that activities involving special nuclear material are not inimical to the common defense and security, and do not constitute an unreasonable risk to the public health and safety. The physical protection system shall be designed to protect against the design basis threats of theft or diversion of strategic special nuclear material and radiological sabotage as stated in 10 CFR 73.1(a).

[10 CFR 73 [DIRS 181969].]

9.10.2.3.5 Physical Protection

The BOP shall contribute to the physical protection in that it provides for the performance capabilities for protection, and is designed with sufficient redundancy and diversity to ensure maintenance of the capabilities.

[10 CFR 73 [DIRS 181969].]

9.10.2.3.6 SNF Storage

The BOP facilities shall provide a protected area for the Storage of SNF and HLW.

[10 CFR 73.51 (b)(2)(i) [DIRS 181969].]

9.10.2.3.7 Access Detection

The BOP facilities shall contribute to detecting and assessing unauthorized penetration of, or activities within, the protected area.

[10 CFR 73.51 (b)(2)(iii) and (d)(3) [DIRS 181969]. DOE M 470.4-2 [DIRS 178562] Chapter VIII provides for access control.]

9.10.2.3.8 Loss of Control

The physical protection system shall be designed to protect against loss of control of the facility that could be sufficient to cause a radiation exposure exceeding the dose as described in 10 CFR 72.106 (b) [DIRS 181968].

[10 CFR 73.51(b)(3) [DIRS 181969].]

9.10.2.3.9 Physical Barriers

The BOP Facilities shall provide the protected area for storage of SNF and HLW such that access to this material requires passage through or penetration of two physical barriers, one barrier at the perimeter of the protected area and one barrier offering substantial penetration resistance. The physical barrier at the perimeter of the protected area must be as defined in 10 CFR 73.2 [DIRS 181969]. Isolation zones, typically each 20 ft wide, on both sides of this barrier, must be provided to facilitate assessment. Install permanent physical barriers to control, deny, impede, or delay unauthorized access into all security areas. Delineate DOE-designated security areas by means of separate and distinct permanent barriers. The requirement for barriers at property protection areas must be locally implemented and included in security plans.

[10 CFR 73.51(d)(1) [DIRS 181969] and DOE M 470.4-2 [DIRS 178562] Chapter IX provides for barriers.]

9.10.2.3.10 BOP Facilities Illumination

The BOP facilities interior and exterior areas' illumination must be sufficient to permit adequate assessment of unauthorized penetrations of or activities within the protected area.

[10 CFR 73.51(d)(2) [DIRS 181969] and DOE M 470.4-2 [DIRS 178562] Chapter VII.5 provides for lighting requirements.]

9.10.2.3.11 NSDB Criterion - BOP Flood Protection Features

Balance of Plant flood protection features shall be designed to protect ITS SSCs from external events (safety function).

- The mean frequency of exceeding the designated flood capacity of 40,000 cubic feet per second shall not exceed 1.0×10^{-06}/yr.

[Preclosure NSDB (BSC 2008 [DIRS 184200]), Appendix F, Table F-1, Item SB.01.]

9.10.2.3.12 Fire Hazard Compliance

The BOP facilities shall be provided fire protection features, as identified in the Site Fire Hazard Analysis, commensurate with the identified hazards such that the design of the facility meets the fire protection system objectives identified in Section 18.1.1.

[Occupied facilities require fire protection support defined in NFPA codes and standards, as identified in the Site Fire Hazard Analysis (BSC 2007 [DIRS 181993]).]

9.10.2.3.13 Silica Exposure Control

The BOP facilities shall limit and control employee exposures to crystalline silica (including quartz, cristobalite, and tridymite) to a degree consistent with the risk.

[This requirement is based on standard industry practice, and complies with the general intent of OSHA.]

9.10.2.3.14 Natural Phenomena Considerations

The BOP facilities shall withstand the effects of seismic events, lightning, wind, floods, ice, and snow.

[Preliminary Hazards Analysis for License Application Study [DIRS 167313].]

9.10.2.3.15 Deleted

[Although this criteria initially identified a radon exposure criteria for the BOP facilities, it should rightly apply to all repository facilities. This criteria was therefore moved to Chapter 2, Section 2.2.3.1.12. The item originated from the Preliminary Hazards Analysis for License Application Study [DIRS 167313].]

9.10.2.3.16 Electrical Area Protection

Permanent test areas for electric power generation, transmission, and distribution shall be guarded by walls, fences, or barriers designed to keep unauthorized employees out.

[29 CFR 1910.269(o)(3)(i) [DIRS 182679].]

9.10.2.3.17 Control Point

The repository shall be designed to have a control point established in the vicinity of the surface to subsurface transition point at the North Portal access to coordinate and control activities. The design shall accommodate the following control point activities and associated equipment.

- Security - physical barrier for access control at the entry/exit point for the subsurface facility
- Personnel accountability - accurate accounting of personnel in the subsurface must be kept at all times
- Radiological surveys - radiological surveys of personnel, vehicles, equipment and materials exiting the subsurface emplacement area
- Communications - at least two means of communication with personnel in the subsurface.

[PO&PR (BSC 2008 [DIRS 185008]), Section 2.7.25. The other activities in this section of the PO&PR are considered Operational Constraints and are not applicable to this criterion.]

9.10.2.4 Miscellaneous Requirements

9.10.2.4.1 Surface Facility Layout

The Surface Facility layout shall be maintained in the following IED:

- *IED Seismic and Seismic Consequence Data*, 800-IED-MGR0-00701-000 Rev 00B (BSC 2008 [DIRS 184991])
- *IED Surface Facility and Environment*, 100-IED-WHS0-00201-000 Rev 00D (BSC 2008 [DIRS 184152])

[These IEDs describe characteristics of the Surface Facility layout transmitted to Performance Assessment organization. The following TMRB Decision Proposals provide Lead Lab and Engineering agreements for IEDs: TMRB-2007-075 Revision 01 (BSC 2008 [DIRS 185044]), TMRB-2008-001 (BSC 2008 [DIRS 185045]), TMRB-2008-005 (BSC 2008 [DIRS 185046]) for 100-IED-WHS0-00201-000-00D, and TMRB 2008-008 Rev 01 (BSC 2008 [DIRS 185053]) for 800-IED-MGR0-00701-000 Rev 00B.]

9.10.3 Conformance Verification

Table 9-10. Remaining BOP Facilities Conformance Verification

Criterion		Preliminary Verification Method					
Number	**Description**	**N/A**	**Analysis**	**Exam**	**Demo**	**Review**	**Test**
9.10.2.1.1	Annual Receipt Rates		X				
9.10.2.1.2	SNF Ratio					X	
9.10.2.1.3	Cask Turnaround Time					X	
9.10.2.1.4	Electrical Transmission Line					X	
9.10.2.1.5	Utility Support Facilities					X	
9.10.2.1.6	Offsite Facility					X	
9.10.2.1.7	BOP Infrastructure					X	
9.10.2.1.8	Vehicle Maintenance and Motor Pool					X	
9.10.2.1.9	Transportation Cask Personnel Barrier Removal					X	
9.10.2.2.1	BOP Utility Space					X	
9.10.2.2.2	Electrical Facilities Space					X	
9.10.2.2.3	Ingress and Egress Capability					X	
9.10.2.2.4	Groundwater Capacity					X	
9.10.2.2.5	Deleted	--	--	--	--	--	--
9.10.2.2.6	LLW Facility					X	
9.10.2.2.7	Deleted	--	--	--	--	--	--
9.10.2.2.8	Deleted	--	--	--	--	--	--
9.10.2.2.9	Deleted	--	--	--	--	--	--
9.10.2.2.10	IICD Compliance					X	
9.10.2.2.11	Technology Capabilities					X	
9.10.2.2.12	Solid Waste Capacity					X	
9.10.2.2.13	Permanent and Temporary Fencing					X	
9.10.2.2.14	Transportation Facilities Utility Feeds					X	
9.10.2.3.1	Safeguards and Security Facilities					X	
9.10.2.3.2	Access Control Point					X	
9.10.2.3.3	Physical Protection Capability					X	
9.10.2.3.4	Nuclear Material Protection					X	
9.10.2.3.5	Physical Protection					X	
9.10.2.3.6	SNF Storage					X	
9.10.2.3.7	Access Detection					X	
9.10.2.3.8	Loss of Control		X				
9.10.2.3.9	Physical Barriers					X	
9.10.2.3.10	BOP Facilities Illumination					X	
9.10.2.3.11	NSDB Criterion – BOP Flood Gate Features					X	
9.10.2.3.12	Fire Hazard Compliance		X				
9.10.2.3.13	Silica Exposure Control		X				
9.10.2.3.14	Natural Phenomena Considerations		X				
9.10.2.3.15	Deleted	--	--	--	--	--	--
9.10.2.3.16	Electrical Area Protection					X	
9.10.2.3.17	Control Point					X	
9.10.2.4.1	Surface Facility Layout					X	

10 Aging Facility

10.1 Overview

10.1.1 Introduction

The Aging Facility shall provide up to 21,000 MTHM of aging capability for the repository, which, includes vertical TAD canisters or DPCs within aging overpacks and horizontal DPCs within horizontal aging modules (HAMs). The Aging Facility shall have the capability to place waste with high thermal power in a location where it can cool to appropriate levels. The Aging Facility shall have the capability to decouple the receipt of waste from emplacement of waste by creating a location to temporarily hold it until the handling facilities can accommodate the waste. It shall also have the capability to move waste between the Aging Facility and handling facilities.

Transportation casks for horizontal DPCs can accommodate direct canister transfer into horizontal aging modules at the aging pad area. Transportation casks with TAD canisters that require aging or management by the Aging Facility are to be in a vertical orientation. The three subsystems of the Aging Facility are discussed below:

- The aging pad subsystem includes the concrete pads and associated SSCs necessary for aging CSNF. The aging pad subsystem accommodates both aging overpacks for vertical aging and HAMs for horizontal aging.
- The cask transfer subsystem consists of equipment capable of moving vertical TAD canisters within aging overpacks and DPCs in aging overpacks or horizontal shielded transfer casks between the handling facilities and the aging pads. Requirements for the cask transfer subsystem are included in Section 13 for the mechanical handling system.
- The aging overpack subsystem -provides vertical aging overpacks and horizontal aging modules for aging commercial canistered SNF.

10.1.2 System Classification

The Aging Facility has been classified as ITS because there are event sequences at the Aging Facility that rely on features of the facility to prevent, reduce the frequency of, or mitigate the consequences such that these event sequences are categorized as beyond Category 2. The aging pad, horizontal aging module, cask tractor (for use with the cask transfer trailer), cask transfer trailers (for use with horizontal shielded transfer cask), site transporter, horizontal shielded transfer cask (for use with horizontal aging modules), and the aging overpack are ITS to maintain waste form container integrity and personnel shielding.

The Aging Facility support structures (including utility buildings, if applicable), mobile platform, and mobile cranes are non-ITS.

The Aging Facility does not include SSCs that are ITWI.

[Preclosure NSDB (BSC 2008 [DIRS 184200]), Appendix A, Table A-1 specifically provides the classification of the SSCs. Classification of the system is based on the inclusion of ITS SSCs within the system. Although the specific text in reference to event sequences at the Aging Facility is no longer included in the classification section of the Preclosure NSDB, it is still applicable to the facility.]

10.2 Functional and Performance Requirements and Bases

10.2.1 Mission Requirements

10.2.1.1 Thermal Cooling Accommodation

The Aging Facility design shall accommodate above ground thermal cooling of TAD canisters and DPCs to meet waste package emplacement thermal limits. The Aging Facility design shall accomodate TAD canisters with a thermal output of up to 22.0 kW.

[CRD (DOE 2007 [DIRS 182960]), Section 3.2.1F calls for a select set of canisters to be transported, as flowed down through MGR-RD [DIRS 177491], Section 3.1.1.O which calls for a range of storage technologies. CO Letter No. 08-007 (Peterson 2008 [DIRS 184939]) provides direction for receiving TAD canisters up to 22 kW thermal output until TAD system vendors provide completed TAD designs.]

10.2.1.2 Aging Spots

The Aging Facility shall provide 2,500 aging spots on the aging pads to provide 21,000 MTHM aging capacity for commercial SNF.

[BCP YMP-2006-053 [DIRS 177483], Block 11, Page 12 of 1159 provided for differences between receipt and emplacement capabilities, as well as thermal management of the waste streams.]

10.2.1.3 Deleted

[BCP YMP-2006-053 [DIRS 177483], Block 11, Page 7 of 1159 provides the value for the thermal power limit. Although BCP YMP-2006-053 [DIRS 177483] provided a specific number, this criterion was combined into Section 10.2.1.1.]

10.2.1.4 Deleted

[This requirement was combined into Criterion 10.2.3.1.]

10.2.1.5 Weight Loads

The Aging Facility shall be designed for a maximum single-loaded AO weight (with any associated lifting fixtures) of 500,000 lbs and a maximum weight of the transporter for the AO shall not exceed 300,000 lbs. The maximum gross weight of the transporter and cask shall not exceed 800,000 lbs.

[This requirement is needed to ensure that the Aging Facility has the required capacity for aging based on the volume of SNF received at the repository that exceeds the allowable thermal limits. The values were derived from industry equipment of this type and for the canisters to be transferred. TSRD (DOE 2006 [DIRS 181305]), Section 3.2.1.1.1 includes lifting features, personnel barriers, and impact limiters in the loaded cask weight.]

10.2.1.6 Deleted

10.2.1.7 TAD Canisters and DPCs

The Aging Facility shall be designed to accommodate the TAD canisters and DPC aging overpacks used for aging, as described by the *Transportation, Aging, and Disposal Canister System Performance Specification (DOE 2007 [DIRS 181403]).*

[MGR-RD [DIRS 177491], Section 3.1.2.F provide direction to include the TAD canisters. The allocation to the Aging Facility was provided in Criterion 2.2.1.11.]

10.2.1.8 Aging Pad Capacity

The Aging Facility shall have capability to place AOs into the aging area. The Aging Facility shall be designed to accommodate TAD canisters with a thermal output of up to 22.0 kW. Aging shall be in a DPC or TAD canister loaded in an AO or a DPC in a HAM and placed in the Aging Facility.

[PO&PR (BSC 2008 [DIRS 185008]), Section 2.5.5 provides the basis for the aging pad capability, and Section 2.5.6 addresses the placement AOs in the Aging Facility. CO Letter No. 08-007 (Peterson 2008 [DIRS 184939]) provides direction for receiving TAD canisters up to 22.0 kW thermal output until TAD system vendors provide completed TAD designs.]

10.2.1.9 Deleted

10.2.1.10 Deleted

[This requirement was combined into Criteria 4.2.1.13 and 5.2.1.17]

10.2.2 General Requirements

10.2.2.1 Service Life

Design, construction, and maintenance of the Aging Facility shall incorporate standard materials and practices appropriate for the specific building type facilitating a 50-year operational service life.

[This is a derived requirement from Criterion 2.2.2.7. BCP YMP-2006-053 [DIRS 177483], Block 11, Page 12 of 1159 #38 and Page 7 of 1159 #30 specifies the duration of the preclosure period for the surface facilities as 50 years.]

10.2.2.2 Deleted

10.2.2.3 Overpack Leak Rates

The TAD canister and DPC within an aging overpack shall comply with the maximum allowable leak rates.

[Although the repository will not store SNF per 10 CFR 72 [DIRS 176577], this functional statement from 10 CFR 72.236(a) alludes to potential specifications for inert atmosphere requirements for storage casks that are likely to be similar to the specifications for aging facility subsystem specifications for inert atmosphere. This function will ensure minimal SNF corrosion to allow future handling capability following cooling of the SNF to allow packaging for disposal. Specific leak rate are not currently defined.]

10.2.2.4 Deleted

[This requirement was moved to Criterion 10.2.3.1.8.]

10.2.2.5 Aging Overpack Cooling

The aging overpack subsystem shall provide adequate cooling to protect the integrity of the SNF cladding material.

[Interim Staff Guidance-11, Cladding Considerations for the Transportation and Storage of Spent Fuel, (NRC 2003 [DIRS 170332]) provides discussion of SNF temperature limits that prompts the function to provide cooling to limit SNF temperatures.]

10.2.2.6 Technology Capabilities

The Aging Facility shall be designed to accommodate TAD canisters, multi-purpose canisters, and dual-purpose canisters.

[CRD (DOE 2007 [DIRS 182960]), Section 3.2.1F as flowed down through the MGR-RD [DIRS 177491], Section 3.1.1.O. Only those portions of the source statements applying to the Aging Facility are included.]

10.2.2.7 Aging Integrity Capabilities

The Aging Facility shall be designed to preserve the physical and mechanical integrity of SNF so that the handling characteristics are not degraded from the arrival condition during aging.

[Although the repository will not store SNF under 10 CFR 72 [DIRS 181968], this functional statement from 10 CFR 72.122(h) provides text that describes a function that is considered appropriate to the aging facility subsystems. This function will ensure a future handling capability following cooling of the SNF to allow packaging for disposal.]

10.2.3 Safety and Protection Requirements

10.2.3.1 NSDB Requirements

10.2.3.1.1 Aging Pads

The aging pads shall be designed to protect against AO tipovers (safety function).

- The mean frequency of aging pads' structure failure causing AO tipover due to the spectrum of seismic events shall be less than or equal to 1.0×10^{-05}/yr.

[Preclosure NSDB (BSC 2008 [DIRS 184200]), Appendix F, Table F-1, Item AP.SB.02.]

10.2.3.1.2 Heliport Location

The aging pads shall be designed to protect ITS SSCs from external events (safety function).

- The aging pads shall be located such that there is a distance of at least one-half mile between the aging pads and the repository heliport.

[Preclosure NSDB (BSC 2008 [DIRS 184200]), Appendix F, Table F-1, Item AP.SB.01.]

10.2.3.1.3 HAM Structural Integrity

The HAMs shall be designed to protect against structural collapse onto a waste container (safety function).

- The mean frequency of collapse of the HAM structure due to the spectrum of seismic events shall be less than or equal to 2.0×10^{-06}/yr.

[Preclosure NSDB (BSC 2008 [DIRS 184200]), Appendix F, Table F-1, Item AP.SB.HAC.01.]

10.2.3.1.4 Cask Tractor

The cask tractor, in conjunction with the cask transfer trailer, shall be designed to limit fire severity, reduce the severity of collision, and protect against cask breach due to explosion (safety functions).

- The combined diesel fuel capacity of the cask tractor and cask transfer trailer shall be limited to a total of 100 gallons.
- The speed of the cask tractor shall be limited to 2.5 mph.
- The cask tractor fuel tank shall preclude fuel tank explosions [e.g., low-melting point construction].

[Preclosure NSDB (BSC 2008 [DIRS 184200]), Appendix C, Table C-1, Items AP.RF.HAT.08 through 10; and Appendix F, Table F-1, Items AP.SB.HAT.01 through 03.]

10.2.3.1.5 Site Transporter

The site transporter shall be designed to (a) protect against spurious movement, (b) reduce the severity of collision, (c) preclude a cask breach due to explosions, (d) reduce the severity of a drop, (e) limit fire severity, (f) protect against a sliding impact into a wall by a site transporter holding an aging overpack, and (g) protect against tipover of the site transporter (safety functions).

- The mean probability of spurious movement of the site transporter while the canister is being lifted or lowered shall be less than or equal to 4.0×10^{-09} per transfer.
- The speed of the site transporter shall be limited to 2.5 mph.
- The site transporter fuel tank shall preclude fuel tank explosions.
- The site transporter shall be incapable of dropping an aging overpack from a height greater than 3 ft.
- The diesel fuel capacity of the site transporter shall be limited to a total of 100 gallons.
- The mean frequency of sliding impact into a wall of the site transporter [within the CRCFs, WHF, and the Receipt Facility] due to the spectrum of seismic events shall be less than or equal to 2.0×10^{-05}/yr.
- The mean frequency of tipover of the site transporter due to the spectrum of seismic events shall be less than or equal to 2.0×10^{-06} /yr.

[Preclosure NSDB (BSC 2008 [DIRS 184200]), Appendix C, Table C-1, Items AP.RF.HAT.01 through 07 for the Receipt Facility; Appendix D, Table D-1, Items AP.CR.HAT.01 through 07 for the CRCFs; Appendix E, Table E-1, Items AP.WH.HAT.01 through 07 for the WHF; and Appendix F, Table F-1, Items AP.SB.HAT.10 through 15.]

10.2.3.1.6 Horizontal Shielded Transfer Cask

The horizontal shielded transfer cask shall be designed to provide containment (safety function).

- The mean conditional probability of breach of a canister within a [horizontal transportation cask or] horizontal STC resulting from:
  - -- a drop shall be less than or equal to 1.0×10^{-05} per drop,
  - -- a drop of a load onto the horizontal STC shall be less than or equal to 1.0×10^{-05} per drop, and
  - -- a side impact of collision shall be less than or equal to 1.0×10^{-08} per impact.
  - -- the spectrum of fires shall be less than or equal to 1.0×10^{-04} per fire event.

[Preclosure NSDB (BSC 2008 [DIRS 184200]), Appendix F, Table F-1, Items AP.SB.HAC.01 through 03, and DS.SB.05.]

10.2.3.1.7 Cask Transfer Trailer

The cask transfer trailers, in conjunction with the cask tractor and transportation cask or horizontal STC, shall be designed to limit fire severity, protect against cask breach due to explosion, reduce severity of a drop, and protect against puncture of a cask (including due to impact) (safety functions).

- The combined diesel fuel capacity of the cask tractor and cask transfer trailer shall be limited to a total of 100 gallons.
- The cask tractor fuel tank shall preclude fuel tank explosions [e.g., low-melting point construction].

- The cask transfer trailer shall be designed to protect against dropping a [horizontal] transportation cask or horizontal STC.
- The cask transfer trailer shall be designed to protect against puncture of a [horizontal] transportation casks or horizontal STC due to impact.
- The cask transfer trailer shall be designed to protect against puncture of canister by the hydraulic ram.
- The cask transfer trailer shall be designed to protect against puncture of a [horizontal] transportation casks and horizontal STCs due to the spectrum of seismic events.

[Preclosure NSDB (BSC 2008 [DIRS 184200]), Appendix C, Table C-1, Items AP.RF.HAT.11 through 15; and Appendix F, Table F-1, Items AP.SB.HAT.04 through 09.]

10.2.3.1.8 Aging Overpack

The AOs shall be designed to protect against canister breach, protect against sliding of an AO, and protect against tipover of the AO (safety functions).

- The mean conditional probability of breach of a canister in an AO resulting from:
  - -- a drop shall be less than or equal to 1.0×10^{-05} per drop and
  - -- a side impact or collision shall be less than or equal to 1.0×10^{-08} per impact.
- The mean frequency of sliding of an AO with a waste container into another AO on the aging pad due to the spectrum of seismic events shall be less than or equal to 5.0×10^{-06}/yr, and
- The mean frequency of tipover of the AO [with a waste container] on the aging pad due to the spectrum of seismic events shall be less than or equal to 5.0×10^{-08}/yr, and

[Preclosure NSDB (BSC 2008 [DIRS 184200]), Appendix F, Table F-1, Items AP.SB.HAC.04 through 07.]

10.2.3.1.9 Dual-Purpose Canister in Aging Overpack

DPCs (horizontal or vertically oriented) (analyzed as representative canisters) in AOs shall provide containment (safety functions).

- The mean conditional probability of breach of a representative canister in an AO resulting from:
  - -- a drop shall be less than or equal to 1.0×10^{-05} per drop,
  - -- a drop of a load onto the DPC or AO shall be less than or equal to 1.0×10^{-05} per drop,
  - -- a side impact of collision shall be less than or equal to 1.0×10^{-08} per impact, and
  - -- the spectrum of fires shall be less than or equal to:
    - - 1.0×10^{-06} per fire event while within the nuclear facilities and
    - - 1.0×10^{-04} per fire event while in the Intra-Site areas.

[Preclosure NSDB (BSC 2008 [DIRS 184200]), Appendix C, Table C-1, Items DS.RF.01 through 03 and DS.RF.05; Appendix D, Table D-1, Items DS.CR.14 through 16 and DS.CR.18; Appendix E, Table E-1, Item DS.WH.01 through 03; and Appendix F, Table F-1, Items DS.SB.01, DS.SB.02, and 07. Criterion not related to the Aging Facility (such as fires on casks) are not included here.]

10.2.3.1.10 TAD Canister in Aging Overpack

TAD canisters (analyzed as representative canisters) in AOs shall provide containment (safety function).

- The mean conditional probability of breach of a representative canister in an AO resulting from:
  - -- a drop of the TAD canister shall be less than or equal to 1.0×10^{-05} per drop,
  - -- a drop of a load onto the TAD canister shall be less than or equal to 1.0×10^{-05} per drop,
  - -- a side impact of collision shall be less than or equal to 1.0×10^{-08} per impact, and
  - -- the spectrum of fires shall be less than or equal to 1.0×10^{-04} per fire event.

[Preclosure NSDB (BSC 2008 [DIRS 184200]), Appendix C, Table C-1, Item DS.RF.07 through 09 and DS.RF.11; Appendix D, Table D-1, Items DS.CR.20 through 22 and DS.CR.25; Appendix E, Table E-1, Item DS.WH.07 through 09 and DS.WH.11; and Appendix F, Table F-1, Items DS.SB.01, DS.SB.02 and DS.SB.07. Criterion not related to the Aging Facility (such as fires on casks) are not included here.]

10.2.3.1.11 DPCs in HAMs

DPCs (analyzed as a representative in HAMs shall provide containment (safety function).

- The mean conditional probability of breach of a representative canister within a HAM resulting from:
  - -- a drop of a load onto the HAM shall be less than or equal to 1.0×10^{-05} per drop,

-- the spectrum of fires shall be less than or equal to 1.0×10^{-04} per fire event.

[Preclosure NSDB (BSC 2008 [DIRS 184200]), Appendix F, Table F-1, Items DS.SB.03 and 06. Although the criterion was written for both TAD canisters and DPCs, TAD canisters are not to be aged in HAMs and therefore, is removed from the text.]

10.2.3.2 Fire Hazard Analysis

The Aging Facility shall be designed and operated to minimize fire hazards consistent with the site Facility FHA.

[Derived engineering requirement dictates including this function based on a general need to minimize fire hazards.]

10.2.3.3 Electrical Power

Continuous electrical power shall be provided to the Aging Facility for lighting, permanent sensors, and gate and door controllers.

[DOE M 470.4-2 [DIRS 178562] Chapter VII. 5.]

10.2.3.4 S&S Barriers

Barriers providing isolation of the aging pads are needed to control access of personnel, vehicles, and materials/equipment to the aging pads from all areas including the Protected Area.

[10 CFR 73.51(d)(3) [DIRS 181969]. Since the Aging Facility is within S&S protected area fence/boundary provided by the BOP, separate requirements are not needed here.]

10.2.3.5 External Hazards

TAD and DPC canisters shall remain intact while in the Aging Facility and the aging overpacks and HAMs shall be designed to withstand the external hazards postulated at the repository.

[BCP YMP-2006-053 [DIRS 177483], Block 11, Page 7 of 1159.]

10.2.4 Miscellaneous Requirements

10.2.4.1 DCMIS Monitoring

Aging Facility conditions shall be continuously monitored via the digital control and management information system (DCMIS).

[This is a derived requirement to ensure that appropriate waste form conditions are maintained. See Chapter 26.]

10.3 Conformance Verification

Table 10-1. Aging Facility Conformance Verification

Criterion		Preliminary Verification Method					
Number	Description	N/A	Analysis	Exam	Demo	Review	Test
10.2.1.1	Thermal Cooling Accommodation		X				
10.2.1.2	Aging Spots		X				
10.2.1.3	Deleted	--	--	--	--	--	--
10.2.1.4	Deleted	--	--	--	--	--	--
10.2.1.5	Weight Loads		X				
10.2.1.6	Deleted	--	--	--	--	--	--
10.2.1.7	TAD Canisters and DPCs					X	
10.2.1.8	Aging Pad Capacity		X				
10.2.1.9	Deleted	--	--	--	--	--	--
10.2.1.10	Deleted	---	---	---	---	---	---
10.2.2.1	Service Life		X				
10.2.2.2	Deleted	--	--	--	--	--	--
10.2.2.3	Overpack Leak Rates		X				
10.2.2.4	Deleted	--	--	--	--	--	--
10.2.2.5	Aging Overpack Cooling		X				
10.2.2.6	Technology Capabilities					X	
10.2.2.7	Aging Integrity Capabilities		X				
10.2.3.1.1	Aging Pad		X				
10.2.3.1.2	Heliport Location		X				
10.2.3.1.3	HAM Structural Integrity		X				
10.2.3.1.4	Cask Tractor		X				
10.2.3.1.5	Site Transporter		X				
10.2.3.1.6	Horizontal Shielded Transfer Cask		X				
10.2.3.1.7	Cask Transfer Trailer		X				
10.2.3.1.8	Aging Overpack					X	
10.2.3.1.9	Dual-Purpose Canister in Aging Overpack					X	
10.2.3.1.10	TAD Canister in Aging Overpack					X	
10.2.3.1.11	DPCs and TAD Canisters in HAMs					X	
10.2.3.2	Fire Hazard Analysis		X				
10.2.3.3	Electrical Power		X				
10.2.3.4	S&S Barriers		X				
10.2.3.5	External Hazards		X				
10.2.4.1	DCMIS Monitoring					X	

11 DOE and Commercial Waste Package Systems

11.1 Overview

11.1.1 Introduction

The sealed waste package restricts the transport of radionuclides outside the waste package boundary before, as well as after, repository closure and provides conditions necessary to maintain the physical and chemical stability of the waste form. In conjunction with natural barriers and other engineered barriers, the sealed waste package shall limit transport of radionuclides in a manner sufficient to meet long-term repository requirements.

The waste package provides physical support in concert with other systems and features to ensure adequate heat transfer from the waste form. It prevents radioactive releases throughout the preclosure period even when exposed to identified Category 1 and Category 2 event sequences. The waste package also retains the integrity of the waste form as received at the repository by preserving it with an inert atmosphere. During normal handling operation the waste package maintains the integrity of the waste form with a sufficiently rigid structure. The sealed waste package prevents moderator intrusion, preventing criticality during preclosure.

After repository closure, the waste package is expected to assist in restricting radioactive releases for at least 10,000 years. Even after corrosion breaches the waste package allowing the drift environment to enter, waste movement is impeded by the remaining parts of the waste package.

11.1.2 System Classification

The DOE and commercial waste package system has been classified as ITS because there are Category 2 event sequences that rely on the waste package for radionuclide containment. The standardized DOE SNF canisters, HLW canisters, TAD canisters, and DPCs are ITS. The waste packages are ITWI.

[Preclosure NSDB (BSC 2008 [DIRS 184200]), Appendix A, Table A-1 specifically provides the classification for the system and Q-List (BSC 2008 [DIRS 180109]) for ITWI SSCs.]

11.2 Functional and Performance Requirements and Bases

11.2.1 Mission Requirements

11.2.1.1 Annual Receipt to Emplacement Rates

The DOE and commercial waste package system shall be capable of receiving SNF and HLW, mostly by rail, at the repository system operating conditions and receipt rates as specified below:

1. To satisfy the Initial Operating Capability, in the first year of operations, the repository shall
   a. Accept and receive 400 MTHM commercial SNF and HLW
   b. Accept and receive 66 DOE SNF canisters and 193 DHLW canisters.
2. During years two through four of operations, the repository shall cumulatively:
   a. Accept and receive at least 3,800 MTHM commercial SNF and HLW
   b. Accept and receive at least 257 DOE SNF canisters and 1,143 DHLW canisters.
3. To satisfy the Full Operating Capability, in year five of operations, the repository shall:
   a Accept and receive 3,000 MTHM commercial SNF and HLW annually
   b Accept and receive 179 DOE SNF canisters and 763 DHLW canisters annually.

[MGR-RD [DIRS 177491], Section 3.1.1.J, and CRD (DOE 2007 [DIRS 182960]), Section 3.2.1B. Naval SNF canisters are not included in the DOE and commercial waste packages. The quantities of waste packages for commercial SNF are not available due to the portion sent to Aging Facility.]

11.2.1.2 TAD Canisters

The TAD canisters will be as specified by the *Transportation, Aging, and Disposal Canister System Performance Specification (DOE 2007 [DIRS 181403])*.

[The MGR-RD [DIRS 177491], Section 3.2.14.D. provides direction to include the TAD canisters. For specific TAD canister criteria, see Section 33.2.2.]

11.2.1.3 Line Loading

The DOE and commercial waste package design shall be capable of operating over a range of thermal conditions and, in conjunction with the Subsurface Facility, shall be capable of allowing a maximum emplacement drift line load (over any seven waste package segment) (linear thermal power) of up to 2.0 kW/m.

The waste package emplacement shall be within an envelope such that the emplacement of waste packages does not exceed the other relevant thermal limits of mid-pillar temperature, drift wall temperature, waste package temperature, and cladding temperature. The calculated Thermal Energy Density of any seven adjacent as-emplaced waste packages shall not exceed 96°C at the mid-pillar calculated using mean host-rock thermal properties and representative saturation levels for wet and dry conditions.

[MGR-RD [DIRS 177491], Section 3.2.12.D and Postclosure Modeling and Analysis Design Parameters, Table 1, item # 05-03, (BSC 2008 [DIRS 183627]). The MGR-RD section cited has been revised by CO Letter No. 08-007 (Peterson 2008 [DIRS 184939]) to provide for greater flexibility in the receipt and processing of the incoming commercial waste stream. Waste package thermal power limits are referenced in Criterion 11.2.2.5.]

11.2.1.4 Deleted

11.2.1.5 TAD Neutron Absorber

The commercial SNF waste packages that provide for the disposal of TAD canister shall be designed and analyzed recognizing that the TAD canisters will incorporate ASTM A887-89, *Standard Specification for Borated Stainless Steel Plate, Sheet, and Strip for Nuclear Application* [DIRS 178058], Type 304B4 (boron content of 1.1 wt % to 1.2 wt %), Grade A (UNS S30464) into the TAD design as the neutron absorber material. Waste packages containing CSNF shall be designed to manage criticality safety. The neutron absorber plates shall be at least 0.433 inches (11 mm thick) thick and contain between 1.1 to 1.2 wt % borated stainless steel manufactured through powder metallurgy. Multiple plates may be used if corrosion assumptions (250 nm/year) are taken into for all surfaces such that 6 mm remains after 10,000 years.

[Transportation, Aging, and Disposal Canister System Performance Specification (DOE 2007 [DIRS 181403]), Section 3.1.5(1) and (2). The need for sub-allocation to the waste package system was provided in Criterion 2.2.1.11. This criterion also partially satisfies PO&PR (BSC 2008 [DIRS 185008]), Section 2.6.2.]

11.2.1.6 South Texas TAD

The waste package and the waste package closure system shall be designed to accommodate the South Texas TAD canister, without modification, in accordance with the following criteria:

- The TAD Canister shall contain 12 fuel assemblies
- The TAD Canister shall be 230 inches long by 52 inches in diameter and shall weigh no greater than 100,000 pounds
- The waste package shall be 248 inches long by 63 inches in diameter and shall weigh no greater than 125,000 pounds.

[TMRB-2007-025 (BSC 2007 [DIRS 181499]), TMRB Decision Proposal, Activities Not to Preclude Handling of South Texas Commercial Spent Nuclear Fuel in the Surface Facilities. Non-canister portions of the source requirements are included in other system criteria.]

11.2.2 General Requirements

11.2.2.1 TAD Canister Capacity

The maximum capacity of the TAD canisters shall be 21 PWR assemblies or 44 BWR assemblies.

[MGR-RD [DIRS 177491], Section 3.1.2.E and BCP YMP-2006-053 [DIRS 177483], Block 11, Page 12 of 1159.]

11.2.2.2 IICD Volume 1 Compliance

The DOE and commercial waste package system shall comply with the agreements established under the IICD Volume 1 (DOE 2007 [DIRS 178792]) to ensure compatibility of HLW and DOE SNF waste forms with repository surface facility and waste package interfaces, including canister interfaces.

[MGR-RD [DIRS 177491], Section 3.1.2.B and CRD (DOE 2007 [DIRS 182960]), Section 3.2.1H.]

11.2.2.3 Waste Package Dimensions

The commercial SNF waste package shall be designed to the TAD canister dimensions in accordance with the *Transportation, Aging and Disposal Canister System Performance Specification* (DOE 2007 [DIRS 181403].

[MGR-RD [DIRS 177491], Section 3.1.2.F and Transportation, Aging and Disposal Canister System Performance Specification (DOE 2007 [DIRS 181403].]

11.2.2.4 Environmental Conditions

The sealed waste package environment shall provide conditions that maintain waste form characteristics that restrict transport of radionuclides. The waste package shall meet the following temperature criteria for all zirconium clad commercial fuel:

- In Surface facilities, normal conditions - 400°C
- For off-normal conditions - 570°C

[Although these statements are not explicit in 10 CFR 63.113(b) and (c) [DIRS 180319], the CFR allows deriving the statement that the WP will restrict transport. This requirement is a function of the waste form in concert with the naval canister design and operations that correspond to a valid thermal operating strategy for the repository.]

11.2.2.5 Waste Package Thermal Power

The DOE and commercial waste package design shall be capable of allowing the disposing of the waste forms with a maximum thermal power of up to 18.0 kW.

The waste package emplacement shall be within an envelope such that the emplacement of waste packages does not exceed the other relevant thermal limits of mid-pillar temperature, drift wall temperature, waste package temperature, and cladding temperature. The calculated Thermal Energy Density of any seven adjacent as-emplaced waste packages shall not exceed 96°C at the mid-pillar calculated using mean host-rock thermal properties and representative saturation levels for wet and dry conditions.

[MGR-RD [DIRS 177491], Section 3.2.12.C. The MGR-RD section cited has been revised by CO Letter No. 08-007 (Peterson 2008 [DIRS 184939]) to provide for greater flexibility in the receipt and processing of the incoming waste stream. Emplacement drift line loading limits are referenced in Criterion 11.2.1.3.]

11.2.2.6 Retrieval Requirements

The waste package shall be designed to permit retrieval during the preclosure period until the completion of a performance confirmation program and commission review of the information obtained from such a program. The waste package shall be designed to permit retrieval during the preclosure period so that any or all of the emplaced waste could be retrieved on a reasonable schedule starting at any time up to 50 years after waste emplacement operations are initiated.

[10 CFR 63.111(e)(1) [DIRS 180319]. Allocation is made to the repository, Subsurface Facility, Waste Packages, and emplacement retrieval.]

11.2.2.7 Waste Package/Canister Interface

The DOE waste packages shall be designed and procured to accommodate the following HLW canisters:

- SRS HLW canister, nominal outside diameter (OD) of 24 in. (61 cm), nominal overall height of 118 in. (3.00 m), maximum individual loaded canister weight of 5,512 lb (2,500 kg), canister material of Stainless Steel Type 304L -expected canisters 7,347,
- Hanford Site (Long) HLW, nominal OD of 24 in. (61 cm), nominal overall height of 180 in. (4.57 m), maximum individual loaded canister weight of 9,260 lb (4,200 kg), canister material of Stainless Steel Type 304L -expected canisters 14,500,
- INL, nominal OD of 24 in. (61 cm), nominal overall height of 118 in. (3.00 m), maximum individual loaded canister weight of 5,512 lb (2,500 kg), canister material of Stainless Steel Type 304L, expected canisters-not

specified, and

- WVDP, nominal OD of 24 in. (61 cm), nominal overall height of 118 in. (3.00 m), maximum individual loaded canister weight of 5,512 lb (2,500 kg), canister material of Stainless Steel Type 304L -expected canisters 300.

[MGR-RD [DIRS 177491], Section 3.1.1.O and CRD (DOE 2007 [DIRS 182960]), Section 3.2.1F (which calls for a select set of canister types). The HLW canister characteristics are obtained from IICD Volume 1 (DOE 2007 [DIRS 178792]), Sections 13.1-13.4, and Figures C-20, C-21, and C-29. Figures C-24, C-25, and C-26 show waste package interfaces.]

11.2.2.8 Canister Sizing

The DOE waste packages shall be designed and procured to accommodate the following DOE SNF canisters:

- NSNFP 18 in. × 10 ft, maximum diameter 18.68 in. (474.2 mm), maximum length 118.11 in. (3,000 mm), maximum weight 5,005 lb (2,271 kg), material Stainless Steel Type 316L
- NSNFP 18 in. × 15 ft, maximum diameter 18.74 in. (476.0 mm), maximum length 179.92 in. (4,570 mm), maximum weight 6,000 lb (2,721 kg), material Stainless Steel Type 316L
- NSNFP 24 in. × 10 ft, maximum diameter 24.80 in. (629.9 mm), maximum length 118.11 in. (3,000 mm), maximum weight 8,996 lb (4,080 kg), material Stainless Steel Type 316L
- NSNFP 24 in. × 15 ft, maximum diameter 24.87 in. (631.7 mm), maximum length 179.92 in. (4,569.9 mm), maximum weight 10,000 lb (4,535 kg), material Stainless Steel Type 316L
- MCO 25 in. × 14 ft, maximum diameter 25.51 in. (642.87 mm), maximum length 166.435 in. (4,227.5 mm), maximum weight 19,642 lb (8,909.6 kg), material Stainless Steel Type 304L.

[MGR-RD [DIRS 177491], Section 3.1.1.O, and CRD (DOE 2007 [DIRS 182960]), Section 3.2.1F (which calls for a select set of canister types). The DOE SNF canister characteristics are obtained from IICD Volume 1 (DOE 2007 [DIRS 178792]), Sections 10.1 and 10.2, and Figures C-4, and C-5 for SNF canister characteristics, and C-7 and C-8 for waste package interfaces, and C-15 for MCO characteristics.]

11.2.2.8.1 DOE SNF Standardized Canister Characteristics

The DOE waste packages shall be designed and procured to accommodate loaded DOE SNF Standardized canisters with the following characteristics:

- capable of standing upright on a flat, horizontal surface and,
- with their impact-absorbing skirts, are right-circular cylinders.

[IICD Volume 1 (DOE 2007 [DIRS 178792]), Section 10.1.1. Although additional source text discusses waste package loading positions, the text does not constitute requirements.]

11.2.2.9 Waste Package Fabrication Welding and Defects

The waste package outer corrosion barrier cylinder shall be fabricated from no more than 3 sections with longitudinal welds offset. The waste package will be inspected and evaluated, per applicable criteria, at the fabrication location and upon receipt at the repository location.

The waste package fabrication welds shall be conducted in accordance with standard nuclear industry requirements. The waste package outer corrosion barrier fabrication welds shall be nondestructively examined by radiographic examination, and ultrasonic testing (UT), for flaws equal to or greater than 1/16 inch or as required by the applicable specification. Outer corrosion barrier fabrication welds shall also be examined using liquid penetrant per the applicable specification.

Fabrication welding flaws 1/16 inch and greater for the outer corrosion barrier shall be repaired, and criteria for acceptable marring shall be followed, in accordance with written procedures that have been accepted by the design organization prior to their usage.

The welding techniques for the fabrication welds shall be constrained to GMAW (gas metal arc welding) except for short-circuiting mode, and automated GTAW (gas tungsten arc welding) for Alloy 22 (UNS N06022) material, limited to <45 kJ/in.

[Postclosure Modeling and Analyses Design Parameters (BSC 2008 [DIRS 183627]), Table 1, items # 03-12, # 03-13, # 03-14, and # 03-15.]

11.2.2.10 Waste Package Composition

The waste package inner vessel shall have one closure lid and be made of Stainless Steel Type 316 and the waste package outer corrosion barrier shall have one closure lid and be made of Alloy 22. The waste package outer barrier shall be comprised of Alloy 22 with a minimum thickness of 25 mm for codisposal and TAD waste packages.

For postclosure mechanical calculations and analysis, a corrosion allowance of at least 2mm per side shall be accounted for on exposed waste package surfaces. Calculations will be performed using material properties at 150 ° C or greater.

The waste package Alloy 22 will be manufactured to ASTM B 575-99a [DIRS 147465] with the additional more restrictive, elemental and chemical composition allowable specifications:

(a) Cr = 20.0% to 21.4%,
(b) Mo = 12.5% to 13.5%
(c) W = 2.5 to 3.0%
(d) Fe = 2.0 to 4.5%.

[TMRB-2006-016 (BSC 2005 [DIRS 182038]) approves deleting the inner Alloy-22 closure lid and maintaining the overall length of the waste package. Postclosure Modeling and Analyses Design Parameters (BSC 2008 [DIRS 183627]), Table 1, items # 03-03 and # 03-19. The corrosion allowance is provided by the Postclosure Modeling and Analyses Design Parameters, Table 1, items # 03-07. Although ASTM B 575-99a [DIRS 147465] is a material specification and would not normally be a reference, it is given credit in Postclosure Analysis. Corrosion allowance thickness for post-closure performance modeling will be demonstrated by the Lead Laboratory.]

11.2.2.11 Canister Lifting Features

Waste packages shall be designed to accommodate canisters designed to support their own weight and that of their contents for multiple vertical lifts and horizontal translations while suspended from above via their lifting features.

[WASRD (DOE 2007 [DIRS 169992]), Section 4.3.2. Similar requirement addressed in Section 13.2.1.2.24. Capabilities of the canister are for interface information only and not for waste package demonstration of compliance.]

11.2.2.12 Canister Thermal Output

The DOE waste packages shall be designed to accommodate DOE SNF canisters that have thermal outputs at the time of acceptance into the repository less than 1,970 W (6,720 BTU/hr).

[WASRD (DOE 2007 [DIRS 169992]), Section 4.3.9.]

11.2.2.13 Deleted

[The requirement for DOE SNF of commercial origin canister dimensions have been deleted from WASRD (DOE 2007 [DIRS 169992]), Section 4.5.]

11.2.2.14 Deleted

[The requirement for multi-element DOE SNF of commercial origin canister dimensions have been deleted from WASRD (DOE 2007 [DIRS 169992]), Section 4.5.]

11.2.2.15 Deleted

[The requirement for single-element canisters weight have been deleted from WASRD (DOE 2007 [DIRS 169992]), Section 4.5.]

11.2.2.16 Deleted

[The requirement for multi-element canisters weight have been deleted from WASRD (DOE 2007 [DIRS 169992]), Section 4.5.]

11.2.2.17 Deleted

[This requirement was combined into Criterion 11.2.2.12.]

11.2.2.18 Cladding Temperature Limit

Cladding temperature for DOE SNF of commercial origin placed in disposable multi-element canisters shall not exceed:

1. 350°C for zirconium alloy-clad assemblies (to prevent damage from creep or hydride reorientation).
2. 400°C for stainless steel-clad assemblies.

Commercial waste packages shall be designed so that CSNF cladding shall not exceed a maximum temperature of 350 °C upon emplacement (to prevent damage from creep or hydride reorientation). For off-normal and accident conditions, the maximum cladding temperature shall not exceed 570°C.

[WASRD (DOE 2007 [DIRS 169992]), Sections 4.3.10 provides for the cladding protection of DOE SNF of commercial origin. DOE requirement does not apply to commercial SNF. Postclosure Modeling and Analyses Design Parameters (BSC 2008 [DIRS 183627]), Table 1, item # 04-05 provides for the CSNF criteria. Interim Staff Guidance 11 (NRC 2003 [DIRS 170332], page 3, Items 2 and 3) limits thermal cycling of a nuclear component with more than a 65°C temperature difference to no more than 10 cycles and provide the limitation of cladding temperature for off-normal or accident condition. This requirement is a function of the waste form in concert with the canister design and operations that correspond to a valid thermal operating strategy for the repository.]

11.2.2.19 HLW Canister Characteristics

DOE waste packages shall be designed to accommodate the HLW form, which meets the following characteristics:

- Stands upright without support on a flat horizontal surface
- Fits without forcing into a right-circular, cylindrical cavity (64 cm diameter and 3.01 m length or alternatively 64 cm diameter and 4.51 m in length).
- Weight not to exceed 9,260 lb (4,200 kg).
- Total heat generation rates for canisters containing HLW not to exceed 1,500 watts per canister at the year of shipment.

[WASRD (DOE 2007 [DIRS 169992]), Sections 4.8.3, 4.8.4, and 4.8.13. "Request for Updated U.S. Department of Energy (DOE) Canister Thermal Output Limits in Support of Repository Design (EM-FMDP-06-006)," (Arenaz 2006 [DIRS 176668]) identified the expected thermal maximums. Although the WASRD Section 4.8.3 identifies a free-standing HLW canister height as 4.51 m, this is distinctly different than the nominal height of 4.57 m that is identified in Criterion 11.2.2.7. Note that the nominal height is actually larger than the allowable free-standing height. This dimension also happens to be different than the waste package interface cavity length documented in Criterion 11.2.2.7 citation to Figure C-25 of the IICD Volume 1 (DOE 2007 [DIRS 178792]). CBCN004 to Revision 001 provided this change.]

11.2.2.20 Deleted

[This requirement was combined into Criterion 11.2.2.19.]

11.2.2.21 Deleted

[This requirement was combined into Criterion 11.2.2.19.]

11.2.2.22 Waste Package Inventories

Each waste package configuration shall be loaded with one of the following combinations:

(a) Two HLW glass canisters and two N-Reactor MCOs (short loading allowed),

(b) Five HLW glass canisters (including no more than 1 LaBS glass canister) and one DOE SNF canister in the center position (short loading allowed),

(c) One 24-in. DOE SNF canister and four HLW canisters (center position empty and no LaBS glass canisters) (short loading allowed), or

(d) One CSNF TAD canister.

[Postclosure Modeling and Analyses Design Parameters (BSC 2008 [DIRS 183627]), Table 1, item # 04-07. Naval SFC has been allocated to Criterion 12.2.1.4. IICD Volume 1 (DOE 2007 [DIRS 178792]), Section 10.1.1 provides specific statements about only loading one DOE SNF standardized canister in a waste package (items c and d). This criterion also satisfies PO&PR (BSC 2008 [DIRS 185008]), Section 2.5.1 as identifying alternate configurations. Spacers may be used as necessary to accommodate various lengths.]

11.2.2.23 HLW Glass Canister Temperature

The waste package shall be designed to maintain the maximum HLW glass temperature to less than 400 °C.

[Postclosure Modeling and Analyses Design Parameters (BSC 2008 [DIRS 183627]), Table 1, item # 04-06.]

11.2.2.24 Waste Package Surface Temperature

The waste package surface temperature shall be kept below 300 °C for the first 500 years and below 200°C for the next 9,500 years to eliminate postclosure issues (i.e. phase stability).

[Postclosure Modeling and Analyses Design Parameters (BSC 2008 [DIRS 183627]), Table 1, item # 06-03. Performance of the waste package in post-closure will be demonstrated by the Lead Laboratory.]

11.2.3 Safety and Protection Requirements

11.2.3.1 DOE and Commercial Waste Package NSDB Requirements

11.2.3.1.1 Waste Package Integrity

The DOE and commercial waste package shall be designed to provide containment (safety function).

- The mean conditional probability of breach of a sealed waste package resulting from:
  - -- a side impact to the waste package shall be less than or equal to 1.0×10^{-08} per drop,
  - -- a drop of a load onto the waste package shall be less than or equal to 1.0×10^{-05} per drop, and
  - -- an end-on impact or collision shall be less than or equal to 1.0×10^{-08} per impact.

[Preclosure NSDB (BSC 2008 [DIRS 184200]), Appendix B, Table B-1, Items DS.IH.01 through 03 for the IHF; Appendix D, Table D-1, Items DS.CR.01 through 03 for the CRCFs; and Appendix G, Table G-1, Items DS.SS.01 through 03 for the Subsurface Facility.]

11.2.3.1.2 Waste Package Subsurface Impacts

The DOE and commercial waste package system shall be designed to protect against rockfall breaching a waste package and protect against a waste package breach due to seismic vibratory motion in an emplacement drift (safety functions).

- The mean frequency of breach of the waste package from:
  - -- a rockfall due to the spectrum of seismic events shall be less than or equal to 1.0×10^{-06}/yr.
  - -- vibratory motion impacts in an emplacement drift due to the spectrum of seismic events shall be less than or equal to 1.0×10^{-06}/yr.

[Preclosure NSDB (BSC 2008 [DIRS 184200]) Appendix G, Table G-1, Items DS.SS.04 and 05.]

11.2.3.1.3 Radiological Exposure Information

The engineered barrier system shall be designed so that, working in combination with natural barriers, there is reasonable expectation that, for 10,000 years following disposal, the reasonably maximally exposed individual receives no more than an annual dose of 15 mrem (0.15 mSv) from releases from the undisturbed Yucca Mountain disposal system.

For the protection of ground water, working in combination with natural barriers and other engineered barriers, the DOE and commercial waste package shall be designed so that there is reasonable expectation that, for 10,000 years of undisturbed performance after disposal, releases of radionuclides from waste in the Yucca Mountain disposal system into the accessible environment will not cause the level of radioactivity in the representative volume of ground water to exceed the following limits:

- Combined radium-226 and radium-228 are less than 5 picocuries per liter (including natural background)
- Gross alpha activity (including radium-226 but excluding radon and uranium) is less than 15 picocuries per liter (including natural background)
- Combined beta and photon emitting radionuclides are less than 4 mrem (0.04 mSv) per year to the whole body or any organ, based on drinking 2 liters of water per day from the representative volume (excluding natural background).

[10 CFR 63.113(b) and 10 CFR 63.113(c) for first paragraph and 10 CFR 63.113(c) and 10 CFR 63.331 [DIRS

180319], Table 1 for the second paragraph and bullets. This statement is a requirement for the Total System Performance Assessment. Although the waste package design is analyzed in the assessment, this requirement is not a requirement on the waste package design. Performance of the waste package in post-closure will be demonstrated by the Lead Laboratory.]

11.2.3.1.4 Waste Package Inerting

All waste packages shall be vacuum dried and backfilled with helium in a manner consistent with that described in *Standard Review Plan for Dry Cask Storage Systems,* NUREG-1536 (NRC 1997 [DIRS 101903]), Section 8.V.1).

[Postclosure Modeling and Analyses Design Parameters (BSC 2008 [DIRS 183627]), Table 1, item # 03-26. TAD canister inerting is included in Chapter 29.]

11.2.3.2 Defense HLW/DOE SNF Disposable Canister NSDB Requirements

Although DOE SNF disposable canisters are not under the production control of the repository, the following requirements are to communicate their capability to the repository. The statements in this subsection are not requirements on the waste package design. The waste package design does not have to show compliance with these requirements.

11.2.3.2.1 DOE SNF Disposable Canisters

To work in conjunction with the defense HLW/DOE SNF codisposal waste package, the standardized DOE SNF canisters shall be designed to provide containment (safety function).

- The mean conditional probability of breach of a standardized DOE SNF canister in the CRCFs resulting from:
  - -- a drop of the canister shall be less than or equal to 1.0×10^{-05} per drop,
  - -- a side impact or collision shall be less than or equal to 1.0×10^{-08} per impact, and
  - -- the spectrum of fires while within a waste package shall be less than or equal to 3.0×10^{-04} per fire event.

[Preclosure NSDB (BSC 2008 [DIRS 184200]), Appendix D, Table D-1, Items DS.CR.04 through 06 for the CRCFs. Criteria for the DOE SNF canisters that are not related to the waste package are addressed in the mechanical handling requirements (see Chapter 13).]

11.2.3.2.2 Defense HLW Canisters

Although the HLW canisters are not provided by the repository, in conjunction with the waste package system, the defense HLW canisters shall be designed to provide containment (safety function).

- The mean conditional probability of breach of an HLW canister resulting from:
  - -- a drop of the canister shall be less than or equal to:
    - 3.0×10^{-02} per drop in the IHF,
    - 7.0×10^{-02} per drop in the CRCFs,
  - -- a side impact or collision shall be less than or equal to 1.0×10^{-08} per impact in the IHF and CRCFs, and
  - -- the spectrum of fires while within a waste package shall be less than or equal to 3.0×10^{-04} per fire event in the IHF and CRCFs.

[Preclosure NSDB (BSC 2008 [DIRS 184200]), Appendix B, Table B-1, Items DS.IH.04 through 06; Appendix D, Table D-1, Items DS.CR.09 through 11. Criteria for the HLW canisters that are not related to the waste package (such as cask fires) are addressed in the mechanical handling requirements (see Chapter 13).]

11.2.3.3 Canistered Commercial SNF NSDB Requirements

11.2.3.3.1 DPCs

Although DPCs are not provided by the repository, in conjunction with the waste package system, the DPC (analyzed as a representative canister) shall be designed to provide containment (safety function).

- The mean conditional probability of breach of a representative canister resulting from a:
  - -- drop of the canister shall be less than or equal to 1.0×10^{-05} per drop,
  - -- drop of a load onto a canister shall be less than or equal to 1.0×10^{-05} per drop, and
  - -- side impact or collision shall be less than or equal to 1.0×10^{-08} per impact.

[Preclosure NSDB (BSC 2008 [DIRS 184200]), Appendix C, Table C-1, Items DS.RF.01 through 03; Appendix D, Table D-1, Items DS.CR.14 through 16; and Appendix E, Table E-1, Items DS.WH.01 through 03. Criteria for the DPCs that are not related to the waste package (such as when in casks) are addressed in the mechanical handling requirements (see Chapter 13).]

11.2.3.3.2 TAD Canisters

The TAD canister (anaylzed as a representative canister) shall be designed to provide for containment (safety function).

- The mean conditional probability of breach of a representative canister resulting from a:
  - -- drop of the canister shall be less than or equal to 1.0×10^{-05} per drop,
  - -- drop of a load onto the canister shall be less than or equal to 1.0×10^{-05} per drop, and
  - -- side impact or collision shall be less than or equal to 1.0×10^{-08} per impact.

[Preclosure NSDB (BSC 2008 [DIRS 184200]), Appendix C, Table C-1, Items DS.RF.07 through 09; Appendix D, Table D-1, Items DS.CR.20 through 22; and Appendix E, Table E-1, Items DS.WH.07 through 09. Criteria for the TAD canisters that are not related to the waste package (such as when in a cask) are addressed in the mechanical handling requirements (see Chapter 13).]

11.2.4 Miscellaneous Requirements

11.2.4.1 Waste Package Longitudinal Gap

The difference between the inner vessel overall length and the outer corrosion barrier cavity length, from the top surface of the interface ring to the bottom surface of the top lid, shall be a minimum of 30 mm.

[Postclosure Modeling and Analyses Design Parameters (BSC 2008 [DIRS 183627]), Table 1, item # 03-05.]

11.2.4.2 Source Terms

The PWR and BWR source terms used for the design of the commercial waste packages shall be maintained in the following IEDs:

- *D&E/RIT IED - PWR and BWR Source Term*, 000-IED-MGR0-00101-000-00A (BSC 2004 [DIRS 171407])
- *D&E/RIT IED - PWR and BWR Source Term*, 000-IED-MGR0-00102-000-00A (BSC 2004 [DIRS 171502])
- *D&E/RIT IED - PWR and BWR Source Term*, 000-IED-MGR0-00103-000-00A (BSC 2004 [DIRS 171503])
- *D&E/RIT IED - PWR and BWR Source Term*, 000-IED-MGR0-00104-000-00A (BSC 2004 [DIRS 171435])
- *D&E/RIT IED - PWR and BWR Source Term [Sheet 5]*, 000-IED-MGR0-00105-000-00A (BSC 2004 [DIRS 178050])
- *D&E/RIT IED - PWR and BWR Source Term*, 000-IED-MGR0-00106-000-00A (BSC 2004 [DIRS 171436])

[These IEDs describe the source terms used in the design of the commercial SNF waste packages transmitted to Performance Assessment organization. TMRB 2004-045 (BSC 2004 [DIRS 182041]) provided direction to develop the IEDs listed above.]

11.2.4.3 Waste Package Characteristics

The characteristics and interfaces of the commercial SNF waste packages shall be maintained in the following IEDs:

- *IED Waste Package Configuration*, 800-IED-WIS0-02101-000 Rev 00B (BSC 2007 [DIRS 182928])
- *IED Waste Package Characteristics - 1999 Design Basis Waste Stream*, 800-IED-WIS0-01401-000-00B (BSC 2007 [DIRS 183105])
- *IED Waste Package Decay Heat Generation-TSPA Modeling Basis*, 800-IED-WIS0-00702-000-00A (BSC 2007 [DIRS 183016])
- *IED Waste Package Decay Heat Generation Design Basis and Thermal Information*, 800-IED-WIS0-00801-000-00B (BSC 2007 [DIRS 180449])
- *IED Seismic and Seismic Consequence Data*, 800-IED-MGR0-00701-000 Rev 00B (BSC 2008 [DIRS 184991])
- *IED Waste Package Radiation Characteristics*, 800-IED-WIS0-01301-000-00C (BSC 2007 [DIRS 183104])
- *IED Waste Package Weld Characteristics [Sheet 1 of 1]*, 800-IED-WIS0-01001-000-00A (BSC 2005 [DIRS 177531])

- *IED Emplacement Drift Configuration and Environment,* 800-IED-MGR0-00501-000 Rev 00B (BSC 2007 [DIRS 180412])
- *IED Emplacement Drift Invert,* 800-IED-MGR0-00601-000-00B (BSC 2007 [DIRS 182746])
- *IED Interlocking Drip Shield,* 800-IED-SSE0-00101-000-00C (BSC 2007 [DIRS 180444])

The interface control mechanism for the emplaced waste packages shall be controlled through the Emplacement Drift Configuration and Environment IED. Also, the interface for the waste package component masses and weld volumes shall be controlled through the Waste Package Configuration IED.

The interface control mechanism for the waste packages in the LA-design inventory, including quantities, dimensions, materials, and characteristics is the Waste Package Configuration IED(s). Materials that have not been previously analyzed and included in the Waste Package Configuration IEDs shall not be placed in the waste package, or in the TAD canister that will be placed into the waste package.

The interface control mechanism for the design basis bounding dose rate calculations for waste packages and representative neutron flux shall be controlled through the Waste Package Radiation Characteristics IED. The interface control mechanisms for the postclosure design basis waste package decay heat shall be controlled through the Waste Package Decay Heat Generation IEDs.

[These IEDs describe characteristics of the commercial SNF waste packages transmitted to the Lead Laboratory organization. The following TMRB Decision Proposals provide Lead Lab and Engineering agreements for IEDs: TMRB 2004-086 (BSC 2004 [DIRS 182049]), 800-IED-WIS0-00801-000-00B and 800-IED-WIS0-01001-000-00A, TMRB 2007-009 (BSC 2007 [DIRS 185061]) and TMRB 2007-017 (BSC 2007 [DIRS 185062] for 800-IED-MGR0-00501-000 Rev 00B, TMRB-2007-048 (BSC 2007 [DIRS 184482]) for 800-IED-SSE0-00101-000-00C, TMRB-2007-052 (BSC 2007 [DIRS 184484]) for 800-IED-WIS0-00702-000-00A and 800-IED-WIS0-02101-000-00B, TMRB-2007-055 (BSC 2007 [DIRS 184487]) for 800-IED-WIS0-01401-000-00B, TMRB-2007-034 (BSC 2007 [DIRS 182272]) for 800-IED-MGR0-00601-000-00B, TMRB-2007-056 (BSC 2007 [DIRS 184645]) for 800-IED-WIS0-01301-000-00C, and TMRB 2008-008 Rev 01 (BSC 2008 [DIRS 185053]) for 800-IED-MGR0-00701-000 Rev 00B. Postclosure Modeling and Analyses Design Parameters (BSC 2008 [DIRS 183627]), Table 1, items # 02-01, # 03-01, # 03-02,# 03-08, # 03-10, # 03-11 and # 04-09.]

11.2.4.4 Waste Package Radial Gap

The difference between the waste package inner vessel outer diameter and outer corrosion barrier inner diameter shall be 2 mm and a maximum of 10 mm for the as-fabricated package.

[Postclosure Modeling and Analyses Design Parameters (BSC 2008 [DIRS 183627]), Table 1, item # 03-04.]

11.2.4.5 Waste Package Internal Pressurization

The waste package shall be designed to accommodate internal pressurization of the waste package including effects of a high temperature of 350 °C and fuel rod gas release.

[Postclosure Modeling and Analyses Design Parameters (BSC 2008 [DIRS 183627]), Table 1, item # 03-06. For the purpose of design, the designed, sealed waste package will accommodate these conditions for the as-fabricated conditions.]

11.2.4.6 Waste Package Closure Welding and Inspection

The waste package closure welds shall be conducted in accordance with standard nuclear industry requirements.

a) The Alloy 22 outer lid will be sealed utilizing the gas tungsten arc weld (GTAW) process, limited to <45 kJ/in. The weld mass shall be less than 0.104 lb/in (18.5 g/cm) of weld.

b) The Alloy 22 outer lid weld will be nondestructively examined using VT, ET, and UT. Flaws greater than 1/16" shall be repaired.

c) The Alloy 22 outer lid weld will be stress mitigated using low-plasticity burnishing to a compressive depth of at least 3 mm.

d) Process control to ensure there has been adequate stress mitigation on the welds will be performed. Following the stress mitigation, the final closure weld will be reexamined using VT, ET, and UT.

[Postclosure Modeling and Analyses Design Parameters (BSC 2008 [DIRS 183627]), Table 1, item # 03-17. This criterion also partially satisfies PO&PR (BSC 2008 [DIRS 185008]), Section 2.2.27.]

11.2.4.7 Waste Package Annealing

After fabrication and before inserting the inner vessel, the waste package outer corrosion barrier shall be solution annealed and quenched.

a) The minimum time for solution annealing will be 20 minutes at 2,050 °F +50 °F / -0 °F (1,121 °C + 28 °C - 0 °C).
b) The waste package shall be quenched at a rate greater than 275 °F (153 °C) per minute to below 700 °F (371 °C).
c) The annealing-induced oxide film shall be removed by means of electrochemical polishing or grit blasting.
d) After solution annealing and quenching, the waste package surface temperature will be kept below 300 °C to eliminate postclosure issues (i.e., phase stability), except for short-term exposure (closure lid welding, etc.).

[Postclosure Modeling and Analyses Design Parameters (BSC 2008 [DIRS 183627]), Table 1, item # 03-16.]

11.2.4.8 Waste Package Surface Defects

The waste package shall be certified as suitable for emplacement by process control and/or inspection to ensure surface marring is acceptable per derived internal constraint. The surface marring constraints are: The damage to the waste package corrosion barrier that displaces material (i.e. scratches) shall be limited to 1/16 in (1.6 mm) in depth. Modifications to the waste package corrosion barrier that deform the surface, but do not remove material (i.e. dents), shall not leave residual tensile stresses greater than 257 MPa.

[Postclosure Modeling and Analyses Design Parameters (BSC 2008 [DIRS 183627]), Table 1, item # 03-18. The outer corrosion barrier shall be repaired, and criteria for acceptable marring shall be followed, in accordance with written procedures that have been accepted by the design organization prior to their usage. Internal constraints are defined in the Postclosure Modeling document.]

11.2.4.9 Waste Package Surface Finish

The waste package surface finish shall be specified to be at least 125 microinches roughness as defined in ASME B46.1-2002 [DIRS 166013].

[Postclosure Modeling and Analyses Design Parameters (BSC 2008 [DIRS 183627]), Table 1, item # 03-23. The outer corrosion barrier shall be repaired, and criteria for acceptable marring shall be followed, in accordance with written procedures that have been accepted by the design organization prior to their usage. Although ASME B46.1 is an industry standard normally put in design criteria and not a requirement, it is credited in the postclosure analysis.]

11.2.4.10 Deleted

[This constraint has been deleted by TMRB-2007-066 (BSC 2007 [DIRS 184235]). This constraint was redundant to the waste package fabrication and handling constraints that are the basis of the probability. Determining this probability is a postclosure function.]

11.2.4.11 Waste Package Handling

The waste package shall be handled in a controlled manner during fabrication, handling, transport, storage, emplacement, installation, operation, and closure activities to minimize damage; surface contamination; and exposure to adverse substances.

[Postclosure Modeling and Analyses Design Parameters (BSC 2008 [DIRS 183627]), Table 1, item # 03-21.]

11.2.4.12 Waste Package Sealing

The waste package closure systems operations shall be controlled. The waste package sealing process shall be remotely controlled in a manner that ensures safe waste package closure.

[PO&PR (BSC 2008 [DIRS 185008]), Section 2.2.33.]

11.2.4.13 Waste Package Welding

The waste package lids and inerting caps shall be welded. The welding process shall be conducted in a manner to meet weld requirements.

[PO&PR (BSC 2008 [DIRS 185008]), Section 2.2.34.]

11.2.4.14 Waste Package Worst-Case Dose Rate

The waste package containing the TAD canister with 21-PWR fuel assemblies shall represent the worst-case dose rate (80 GWd/MTU burnup, 5% U-235 enrichment and 5 years decay).

[Postclosure Modeling and Analyses Design Parameters (BSC 2008 [DIRS 183627]), Table 1, items # 03-09 and # 04-03.]

11.3 Conformance Verification

Table 11-1. DOE and Commercial Waste Package Conformance Verification

Criterion		Preliminary Verification Method					
Number	Description	N/A	Analysis	Exam	Demo	Review	Test
11.2.1.1	Annual Receipt to Emplacement Rates					X	
11.2.1.2	TAD Canisters					X	
11.2.1.3	Line Loading					X	
11.2.1.4	Deleted	--	--	--	--	--	--
11.2.1.5	TAD Neutron Absorber					X	
11.2.1.6	South Texas TAD					X	
11.2.2.1	TAD Canister Capacity				X		
11.2.2.2	IICD Volume 1 Compliance					X	
11.2.2.3	Waste Package Dimensions					X	
11.2.2.4	Environmental Conditions		X				
11.2.2.5	Waste Package Thermal Power					X	
11.2.2.6	Retrieval Requirements					X	
11.2.2.7	Waste Package/Canister Interface					X	
11.2.2.8	Canister Sizing					X	
11.2.2.8.1	DOE SNF Standardized Canister Characteristics					X	
11.2.2.9	Waste Package Fabrication Welding and Defects				X		
11.2.2.10	Waste Package Composition				X		
11.2.2.11	Canister Lifting Features					X	
11.2.2.12	Canister Thermal Output		X				
11.2.2.13	Deleted	--	--	--	--	--	--
11.2.2.14	Deleted	--	--	--	--	--	--
11.2.2.15	Deleted	--	--	--	--	--	--
11.2.2.16	Deleted	--	--	--	--	--	--
11.2.2.17	Deleted	--	--	--	--	--	--
11.2.2.18	Cladding Temperature Limit		X				
11.2.2.19	HLW Canister Characteristics					X	
11.2.2.20	Deleted	--	--	--	--	--	--
11.2.2.21	Deleted	--	--	--	--	--	--
11.2.2.22	Waste Package Inventories					X	
11.2.2.23	HLW Glass Canister Temperature		X				
11.2.2.24	Waste Package Surface Temperature					X	
11.2.3.1.1	Waste Package Integrity		X				
11.2.3.1.2	Waste Package Subsurface Impacts					X	
11.2.3.1.3	Radiological Exposure Information	X					
11.2.3.1.4	Waste Package Inerting					X	
11.2.3.2.1	DOE SNF Disposal Canisters					X	
11.2.3.2.2	Defense HLW Canisters					X	
11.2.3.3.1	DPCs					X	
11.2.3.3.2	TAD Canisters					X	
11.2.4.1	Waste Package Longitudinal Gap					X	
11.2.4.2	Source Terms					X	
11.2.4.3	Waste Package Characteristics					X	
11.2.4.4	Waste Package Radial Gap					X	

Table 11-1. DOE and Commercial Waste Package Conformance Verification (Continued)

Criterion		Preliminary Verification Method					
Number	**Description**	**N/A**	**Analysis**	**Exam**	**Demo**	**Review**	**Test**
11.2.4.5	Waste Package Internal Pressurization					X	
11.2.4.6	Waste Package Closure Welding & Inspection					X	
11.2.4.7	Waste Package Annealing					X	
11.2.4.8	Waste Package Surface Defects					X	
11.2.4.9	Waste Package Surface Finish					X	
11.2.4.10	Deleted	---	---	---	---	---	---
11.2.4.11	Waste Package Handling					X	
11.2.4.12	Waste Package Sealing					X	
11.2.4.13	Waste Package Welding					X	
11.2.4.14	Waste Package Worst-Case Dose Rate					X	

12 Naval SNF Waste Package System

12.1 Overview

12.1.1 Introduction

Sealed waste packages restrict the transport of radionuclides to the outside of the waste package boundary after repository closure and provide conditions necessary to maintain the physical and chemical stability of the waste form. In conjunction with natural barriers and other engineered barriers, sealed waste packages will limit transport of radionuclides in a manner sufficient to meet long-term repository requirements.

The waste package provides physical support for and ensures adequate heat transfer from the waste form and prevents radioactive releases throughout the preclosure period even when exposed to identified Category 1 and Category 2 event sequences. The waste package also retains the integrity of the naval SNF canister as received at the repository by preserving it with an inert atmosphere and a sufficiently rigid structure of the waste package. The primary components of the naval SNF waste package system are the inner vessel to hold the naval SNF canister, the outer corrosion barrier, and waste package pallet used for lifting and handling purposes.

12.1.2 System Classification

The naval SNF waste package system has been classified as ITS and ITWI. The naval SNF canisters and naval SNF waste packages are ITS and ITWI.

[Preclosure NSDB (BSC 2008 [DIRS 184200]), Appendix A, Table A-1 provides for the ITS classification of the system and Q-List (BSC 2008 [DIRS 180109]) for ITWI SSCs.]

12.2 Functional and Performance Requirements and Bases

12.2.1 Mission Requirements

12.2.1.1 Line Loading

The naval SNF waste package design shall be capable of operating over a range of thermal conditions and, with the Subsurface Facility, shall not be emplaced in a seven waste package segment which contains another waste package in excess of 11.8 kW or has an emplacement drift line load (average linear thermal power) of greater than 1.45 kW/m.

[MGR-RD [DIRS 177491], Section 3.2.12.D and Postclosure Modeling and Analysis Design Parameters, Table 1, item # 05-03, (BSC 2008 [DIRS 183627]). The MGR-RD section cited has been revised by CO Letter No. 08-007 (Peterson 2008 [DIRS 184939]) to provide for greater flexibility in the receipt and processing of the incoming commercial waste stream and yet maintain the conditions required for naval waste stream.]

12.2.1.2 IICD Compliance

The Naval SNF waste package design shall comply with the agreements established under the IICD Volume 1 (DOE 2007 [DIRS 178792]) to ensure compatibility of Naval SNF waste forms with repository surface facility interfaces, including canister handling interfaces and compatibility between transportation equipment (e.g., transporters) and transported items (e.g., casks and canisters) with mechanical and envelope interfaces.

[MGR-RD [DIRS 177491], Section 3.1.2.B as flowed down from the CRD (DOE 2007 [DIRS 182960]), Section 3.2.1H.]

12.2.1.3 Deleted

[This requirement is a duplicate of section 3.2.1.9.3 and 13.2.1.2.24]

12.2.1.4 Single Canister Waste Package Loading

The naval SNF waste package shall be loaded with only one naval SNF canister.

[Postclosure Modeling and Analyses Design Parameters (BSC 2008 [DIRS 183627]), Table 1, item # 04-07. Only the naval portion is included. The other inventories are allocated to Criterion 11.2.2.22.]

12.2.2 General Requirements

12.2.2.1 Radiological Exposure Information

The engineered barrier system shall be designed so that, working in combination with natural barriers, there is reasonable expectation that, for 10,000 years following disposal, the reasonably maximally exposed individual receives no more than an annual dose of 15 mrem (0.15 mSv) from releases from the undisturbed Yucca Mountain disposal system.

For the protection of ground water, working in combination with natural barriers and other engineered barriers, the DOE and commercial waste package shall be designed so that there is reasonable expectation that, for 10,000 years of undisturbed performance after disposal, releases of radionuclides from waste in the Yucca Mountain disposal system into the accessible environment will not cause the level of radioactivity in the representative volume of ground water to exceed the following limits:

- Combined radium-226 and radium-228 are less than 5 picocuries per liter (including natural background)
- Gross alpha activity (including radium-226 but excluding radon and uranium) is less than 15 picocuries per liter (including natural background)
- Combined beta and photon emitting radionuclides are less than 4 mrem (0.04 mSv) per year to the whole body or any organ, based on drinking 2 liters of water per day from the representative volume (excluding natural background).

[10 CFR 63.113(b) and 10 CFR 63.111 for the first paragraph and 10 CFR 63.113(c) and 10 CFR 63.331 [DIRS 180319], Table 1 for the second paragraph and bullets. This statement is a requirement for the Total System Performance Assessment. Although the waste package design is analyzed in the assessment, this requirement is not a requirement on the waste package design. It is provided here for information only. The waste package design does not have to demonstrate compliance with this requirement. This requirement was modified in response to CR 10425.]

12.2.2.2 Thermal Power

The naval SNF waste package design shall be capable of disposing the waste forms with a maximum thermal power of 11.8 kW.

[MGR-RD [DIRS 177491], Section 3.2.12.C. WASRD (DOE 2007 [DIRS 169992]), Section 4.4.9 provides for the naval SNF canister being 11.8kW at time of receipt, thereby, providing the waste package limits. The MGR-RD section cited has been revised by CO Letter No. 08-007 (Peterson 2008 [DIRS 184939]) to provide for greater flexibility in the receipt and processing of the incoming commercial waste stream and yet maintain the conditions required for naval waste stream.]

12.2.2.3 Waste Package Composition

The naval SNF waste package inner vessel shall have one lid and be made of stainless steel type 316 and the outer corrosion barrier shall have one lid and be made of Alloy 22. The waste package outer barrier shall be comprised of Alloy 22 with a minimum thickness of 25 mm for naval waste packages. For postclosure mechanical calculations and analysis, a corrosion allowance of at least 2mm per side shall be accounted for on exposed waste package surfaces. Calculations will be performed using material properties at 150 °C or greater.

The waste package Alloy 22 will be manufactured to ASTM B 575-99a [DIRS 147465] with the additional more restrictive, elemental and chemical composition allowable specifications:

(a) Cr = 20.0 to 21.4%,
(b) Mo = 12.5 to 13.5%
(c) W = 2.5 to 3.0%
(d) Fe = 2.0 to 4.5%.

[The corrosion allowance is provided by the Postclosure Modeling and Analyses Design Parameters (BSC 2008 [DIRS 183627]), Table 1, items # 03-03, # 03-07, and # 03-19. TMRB 2006-016 (BSC 2005 [DIRS 182038]) approved deleting the inner Alloy 22 closure lid and maintaining the overall length of the waste package. Although ASTM B 575-99a is a material specification and would not normally be a reference, it is given credit in Postclosure Analysis.]

12.2.2.4 Waste Package Retrieval

The naval SNF waste package system shall be designed to permit retrieval during the preclosure period so that any or all of the emplaced waste could be retrieved on a reasonable schedule starting at any time up to 50 years after waste emplacement operations are initiated.

[10 CFR 63.111(e)(1) [DIRS 180319] and 10 CFR 61.7(b)(2) [DIRS 181966]. Allocation is made to the repository, Subsurface Facility, waste packages, and emplacement retrieval.]

12.2.2.5 Waste Package Surface Temperature

The naval waste package surface temperature shall be kept below 300° C for the first 500 years and below 200° C for the next 9,500 years to eliminate postclosure issues (i.e. phase stability).

[Postclosure Modeling and Analyses Design Parameters (BSC 2008 [DIRS 183627]), Table 1, item # 06-03. This requirement is a function of the waste form in concert with the naval canister design and operations that correspond to a valid thermal operating strategy for the repository. Performance of the waste package in post-closure will be demonstrated by the Lead Laboratory.]

12.2.3 Safety and Protection Requirements

12.2.3.1 NSDB Requirements

12.2.3.1.1 Waste Package Integrity

The naval SNF waste package shall be designed to provide containment (safety function).

- The mean conditional probability of breach of a sealed waste package resulting from:
  - -- a side impact to the waste package shall be less than or equal to 1.0×10^{-08} per impact,
  - -- a drop of a load onto the waste package shall be less than or equal to 1.0×10^{-05} per drop, and
  - -- an end-on impact or collision shall be less than or equal to:
    - 1.0×10^{-05} per impact in the IHF and
    - 1.0×10^{-08} per impact in the Subsurface Facility.

[Preclosure NSDB (BSC 2008 [DIRS 184200]), Appendix B, Table B-1, Items DN.IH.01 through 03 for the IHF; and Appendix G, Table G-1, Items DN.SS.01 through 03 for the Subsurface Facility.]

12.2.3.1.2 Waste Package Subsurface Impacts

The naval SNF waste package system shall be designed to protect against a rockfall breaching a waste package and protect against a waste package breach due to seismic vibratory motion in an emplacement drift (safety functions).

- The mean frequency of a breach of the waste package from:
  - -- a rockfall due to the spectrum of seismic events shall be less than or equal to 1.0×10^{-06}/yr and
  - -- vibratory motion impacts in an emplacement drift due to the spectrum of seismic events shall be less than or equal to 1.0×10^{-06}/yr.

[Preclosure NSDB (BSC 2008 [DIRS 184200]), Appendix G, Table G-1, Items DN.SS.04 and 05.]

12.2.3.1.3 Naval Spent Fuel Canisters

Although the naval SNF canisters are not provided by the repository, in conjunction with the waste package system, the naval SNF canisters provide containment (safety function).

- The mean probability of a drop and breach of the naval SNF canisters in the IHF shall be less than or equal to 2.0×10^{-05} over the preclosure period.
- The mean conditional probability of breach of a naval SNF canister in the IHF resulting from a:
  - -- drop of a load onto the canister shall be less than or equal to 1.0×10^{-05} per drop,
  - -- side impact or collision shall be less than or equal to 1.0×10^{-08} per impact, and
  - -- spectrum of fires when the canister is within a waste package shall be less than or equal to 1.0×10^{-04} per fire event.

[Preclosure NSDB (BSC 2008 [DIRS 184200]), Appendix B, Table B-1, Items DN.IH.04 through 06 and DN.IH.09. Requirements on canister performance are interface information and the waste package in and of itself cannot demonstrate compliance with canister criteria. Criteria for the naval spent fuel canister that are not

related to the waste package are included in the mechanical handling criteria (see Chapter 13). The naval SNF canisters, as handled only in the IHF, were analyzed as representative canisters in preclosure analyses.]

12.2.4 Miscellaneous Requirements

12.2.4.1 Waste Package Characteristics

Characteristics and interfaces of the waste packages shall be maintained in the following IEDs:

- *IED Waste Package Configuration*, 800-IED-WIS0-02101-000 Rev 00B (BSC 2007 [DIRS 182928])
- *IED Waste Package Characteristics - 1999 Design Basis Waste Stream*, 800-IED-WIS0-01401-000-00B (BSC 2007 [DIRS 183105])
- *IED Waste Package Decay Heat Generation-TSPA Modeling Basis*, 800-IED-WIS0-00702-000-00A (BSC 2007 [DIRS 183016])
- *IED Waste Package Decay Heat Generation Design Basis and Thermal Information*, 800-IED-WIS0-00801-000-00B (BSC 2007 [DIRS 180449])
- *IED Seismic and Seismic Consequence Data*, 800-IED-MGR0-00701-000 Rev 00B (BSC 2008 [DIRS 184991])
- *IED Waste Package Radiation Characteristics*, 800-IED-WIS0-01301-000-00C (BSC 2007 [DIRS 183104])
- *IED Waste Package Weld Characteristics [Sheet 1 of 1]*, 800-IED-WIS0-01001-000-00A (BSC 2005 [DIRS 177531])
- *IED Emplacement Drift Configuration and Environment,* 800-IED-MGR0-00501-000 Rev 00B (BSC 2007 [DIRS 180412])
- *IED Emplacement Drift Invert,* 800-IED-MGR0-00601-000 Rev 00B (BSC 2007 [DIRS 182746])
- *IED Interlocking Drip Shield,* 800-IED-SSE0-00101-000 Rev 00C (BSC 2007 [DIRS 180444]).

The interface control mechanism for the emplaced waste packages shall be controlled through the Emplacement Drift Configuration and Environment IED. Also, the interface for the waste package component masses and weld volumes shall be controlled through the Waste Package Configuration IED**.**

The interface for the waste packages in the LA-design inventory shall have the quantities, dimensions, materials, and characteristics controlled through the Waste Package Configuration IED(s). Materials that have not been previously analyzed and included in the Waste Package Configuration IEDs shall not be placed in the naval SNF waste package.

The interface control mechanism for the design basis bounding dose rate calculations for waste packages and representative neutron flux shall be controlled through the Waste Package Radiation Characteristics IED. The interface control mechanisms for the postclosure design basis waste package decay heat shall be controlled through the Waste Package Decay Heat Generation IEDs.

[These IEDs describe characteristics of the commercial SNF waste packages transmitted to the Lead Laboratory organization. The following TMRB Decision Proposals provide Lead Lab and Engineering agreements for IEDs: TMRB 2004-086 (BSC 2004 [DIRS 182049]) for 800-IED-WIS0-00801-000-00B and 800-IED-WIS0-01001-000-00A, TMRB-2007-048 (BSC 2007 [DIRS 184482]) for 800-IED-SSE0-00101-000-00C, TMRB-2007-052 (BSC 2007 [DIRS 184484]) for 800-IED-WIS0-00702-000-00A and 800-IED-WIS0-02101-000-00B, TMRB-2007-055 (BSC 2007 [DIRS 184487]) for 800-IED-WIS0-01401-000-00B, TMRB-2007-034 (BSC 2007 [DIRS 182272]) for 800-IED-MGR0-00601-000-00B, TMRB-2007-056 (BSC 2007 [DIRS 184645]) for 800-IED-WIS0-01301-000-00C, and TMRB 2008-008 Rev 01 (BSC 2008 [DIRS 185053]) for 800-IED-MGR0-00701-000 Rev 00B. Postclosure Modeling and Analyses Design Parameters (BSC 2008 [DIRS 183627]), Table 1, items # 02-01, # 03-01, # 03-02, # 03-08, # 03-10, # 03-11, and # 04-09.]

12.2.4.2 Deleted

[This requirement was moved to Criterion 8.2.1.24.]

12.2.4.3 Waste Package Radial Gap

The difference between the waste package inner vessel outer diameter and the outer corrosion barrier inner diameter shall be a minimum of 2 mm and a maximum of 10 mm for the as fabricated package.

[Postclosure Modeling and Analyses Design Parameters (BSC 2008 [DIRS 183627]), Table 1, item # 03-04.]

12.2.4.4 Waste Package Internal Pressurization

The naval waste package shall be designed to accommodate internal pressurization of the waste package including effects of a high temperature of 350 °C and fuel rod gas release.

[Postclosure Modeling and Analyses Design Parameters (BSC 2008 [DIRS 183627]), Table 1, item # 03-06. For the purpose of design, the designed, sealed waste package will accommodate these conditions for the as-fabricated conditions.]

12.2.4.5 Waste Package Longitudinal Gap

The difference between the inner vessel overall length and the outer corrosion barrier cavity length, from the top surface of the interface ring to the bottom surface of the top lid, shall be a minimum of 30 mm.

[Postclosure Modeling and Analyses Design Parameters (BSC 2008 [DIRS 183627]), Table 1, item # 03-05.]

12.2.4.6 Waste Package Fabrication Welding and Defects

The naval waste package outer corrosion barrier cylinder shall be fabricated from no more than 3 sections with longitudinal welds offset. The waste package will be inspected and evaluated, per applicable criteria, at the fabrication location and upon receipt at the repository location.

The waste package fabrication welds shall be conducted in accordance with standard nuclear industry requirements. The waste package outer corrosion barrier fabrication welds shall be nondestructively examined by radiographic examination, and ultrasonic testing, for flaws equal to or greater than 1/16 inch or as required by the applicable specification. Outer corrosion barrier fabrication welds shall also be examined using liquid penetrant per the applicable specification.

Welding flaws 1/16 inch and greater for the outer corrosion barrier shall be repaired, and criteria for acceptable marring shall be followed, in accordance with written procedures that have been accepted by the design organization prior to their usage.

The welding techniques for the fabrication welds shall be constrained to GMAW (gas metal arc welding) except for short-circuiting mode, and automated GTAW (gas tungsten arc welding) for Alloy 22 (UNS N06022) material, limited to <45 kJ/in.

[Postclosure Modeling and Analyses Design Parameters (BSC 2008 [DIRS 183627]), Table 1, items # 03-12, # 03-13, # 03-14, and # 03-15.]

12.2.4.7 Waste Package Closure Welding and Inspection

The waste package closure welds shall be conducted in accordance with standard nuclear industry requirements.

a) The Alloy 22 outer lid will be sealed utilizing the gas tungsten arc weld (GTAW) process, limited to <45 kJ/in. The weld mass shall be less than 0.104 lb/in (18.5 g/cm) of weld.
b) The Alloy 22 outer lid weld will be nondestructively examined using VT, ET, and UT. Flaws greater than 1/16" shall be repaired.
c) The Alloy 22 outer lid weld will be stress mitigated using low-plasticity burnishing to a compressive depth of at least 3 mm.
d) Process control to ensure there has been adequate stress mitigation on the welds will be performed. Following the stress mitigation, the final closure weld will be reexamined using VT, ET, and UT.

[Postclosure Modeling and Analyses Design Parameters (BSC 2008 [DIRS 183627]), Table 1, item # 03-17. This criterion also partially satisfies PO&PR (BSC 2008 [DIRS 185008]), Section 2.2.27.]

12.2.4.8 Waste Package Annealing

After fabrication and before inserting the inner vessel, the naval waste package outer corrosion barrier shall be solution annealed and quenched.

a) The minimum time for solution annealing will be 20 minutes at 2,050 °F +50 °F / -0 °F (1,121 °C + 28 °C -0 °C).
b) The waste package shall be quenched at a rate greater than 275 °F (153 °C) per minute to below 700 °F (371 °C).

c) The annealing-induced oxide film shall be removed by means of electrochemical polishing or grit blasting.
d) After solution annealing and quenching, the waste package surface temperature will be kept below 300 °C to eliminate postclosure issues (i.e., phase stability), except for short-term exposure (closure lid welding, etc.).

[Postclosure Modeling and Analyses Design Parameters (BSC 2008 [DIRS 183627]), Table 1, item # 03-16.]

12.2.4.9 Waste Package Surface Defects

The naval waste package shall be certified as suitable for emplacement by process control and/or inspection to ensure surface marring is acceptable per derived internal constraint. The surface marring constraints are: The damage to the waste package corrosion barrier that displaces material (i.e. scratches) shall be limited to 1/16 in (1.6 mm) in depth. Modifications to the waste package corrosion barrier that deform the surface, but do not remove material (i.e. dents), shall not leave residual tensile stresses greater than 257 MPa.

[Postclosure Modeling and Analyses Design Parameters (BSC 2008 [DIRS 183627]), Table 1, item # 03-18. The outer corrosion barrier shall be repaired, and the criteria for acceptable marring shall be followed in accordance with written procedures that have been accepted by the design organization prior to their usage. Internal constraints are defined in the Postclosure Modeling document.]

12.2.4.10 Waste Package Surface Finish

The waste package surface finish shall be specified to be at least 125 microinches roughness as defined in ASME B46.1-2002 [DIRS 166013].

[Postclosure Modeling and Analyses Design Parameters (BSC 2008 [DIRS 183627]), Table 1, item # 03-23. The outer corrosion barrier shall be repaired, and the criteria for acceptable marring shall be followed in accordance with written procedures that have been accepted by the design organization prior to their usage. Surface defects include, but are not limited to, scratches, nicks, dents, and permanent changes to the surface stress condition. Prior to emplacement, a waste package inspection will be necessary to ensure that the waste package surface state is of a condition consistent with the modeling of waste package degradation.]

12.2.4.11 Deleted

[This constraint has been deleted by TMRB-2007-066 (BSC 2007 [DIRS 184235]). This constraint was redundant to waste package fabrication and handling constraints that are the basis of the probability. Determining this probability is a postclosure function.]

12.2.4.12 Waste Package Inerting

The naval waste packages shall be vacuum dried and backfilled with helium in a manner consistent with that described in *Standard Review Plan for Dry Cask Storage Systems,* NUREG-1536 (NRC 1997 [DIRS 101903]), Section 8.V.1).

[Postclosure Modeling and Analyses Design Parameters (BSC 2008 [DIRS 183627]), Table 1, item # 03-26.]

12.2.4.13 Waste Package Handling

The waste package shall be handled in a controlled manner during fabrication, handling, transport, storage, emplacement, installation, operation, and closure activities to minimize damage; surface contamination; and exposure to adverse substances.

[Postclosure Modeling and Analyses Design Parameters (BSC 2008 [DIRS 183627]), Table 1, item # 03-21.]

12.2.4.14 Waste Package Sealing

The waste package closure systems operations shall be controlled. The waste package sealing process shall be remotely controlled in a manner that ensures safe waste package closure.

[PO&PR (BSC 2008 [DIRS 185008]), Section 2.2.33.]

12.2.4.15 Waste Package Welding

The waste package lids and inerting caps shall be welded. The welding process shall be conducted in a manner to meet weld requirements.

[PO&PR (BSC 2008 [DIRS 185008]), Section 2.2.34.]

12.3 Conformance Verification

Table 12-1. Naval Waste Package Conformance Verification

Criterion		Preliminary Verification Method					
Number	**Description**	**N/A**	**Analysis**	**Exam**	**Demo**	**Review**	**Test**
12.2.1.1	Line Loading	X					
12.2.1.2	IICD Compliance		X				
12.2.1.3	Deleted	--	--	--	--	--	--
12.2.1.4	Single Canister WP Loading					X	
12.2.2.1	Radiological Exposure Information	X					
12.2.2.2	Thermal Power					X	
12.2.2.3	Waste Package Composition					X	
12.2.2.4	Waste Package Retrieval		X				
12.2.2.5	Waste Package Surface Temperature		X				
12.2.3.1.1	Waste Package Integrity		X				
12.2.3.1.2	Waste Package Subsurface Impacts					X	
12.2.3.1.3	Naval Spent Fuel Canister	X					
12.2.4.1	Waste Package Characteristics					X	
12.2.4.2	Deleted	--	--	--	--	--	--
12.2.4.3	Waste Package Radial Gap					X	
12.2.4.4	Waste Package Internal Pressurization					X	
12.2.4.5	Waste Package Longitudinal Gap					X	
12.2.4.6	Waste Package Fabrication Welding and Defects					X	
12.2.4.7	Waste Package Closure Welding and Inspection					X	
12.2.4.8	Waste Package Annealing					X	
12.2.4.9	Waste Package Surface Defects					X	
12.2.4.10	Waste Package Surface Finish					X	
12.2.4.11	Deleted	--	--	--	--	--	--
12.2.4.12	Waste Package Inerting					X	
12.2.4.13	Waste Package Handling					X	
12.2.4.14	Waste Package Sealing					X	
12.2.4.15	Waste Package Welding					X	

13 Mechanical Handling System

13.1 Overview

13.1.1 Introduction

The mechanical handling system consists of structures, systems, or components (SSCs) necessary to receive waste in transportation casks; transfer bare fuel assemblies into TAD canisters underwater, transfer canisterized SNF and HLW into waste packages, transfer canisterized commercial SNF into aging overpacks, as required; and prepare loaded and sealed waste packages for delivery to the emplacement and retrieval/drip shield installation system. The mechanical handling system includes those items required to transfer canistered SNF between waste handling facilities, such as TADs from the WHF to the CRCFs or aging overpacks to and from the Aging Facility. In addition, the system consists of the SSCs required to open DPCs in support of waste transfer operations. The following sections discuss, at a high level, the operations of the mechanical handling system within each facility.

IHF
The mechanical handling system in the IHF receives transportation casks containing DOE HLW canisters and naval SNF canisters. In addition, the IHF receives empty waste packages. The transportation casks are removed from the carriers and opened to allow canister transfer. Canisters are transferred vertically from the cask in one shielded area to a waste package in another using a canister transfer machine. The mechanical handling system seals the waste packages and transfers them to the emplacement and retrieval/drip shield installation system TEV. (Refer to Sections 11.2.4 and 12.2.4 for waste package closure and waste package surface finish requirements). Empty transportation casks are placed back on the carriers and returned to the national transportation system.

If a defective canister is detected, the cask and defective canister are routed to the remediation system within the WHF for processing, if available, or to a suitable area for storage until the remediation system is constructed and operational. Because of clean canister transfer, the facility has a low potential for contamination and no confinement is necessary between the cask and the transfer room. Operations are shielded and allow manual operations of the auxiliary transfer functions. Transfer of the various waste forms by the mechanical handling system is performed with several different handling devices. Each waste transfer handling device has a variety of grapples to accommodate all the waste forms that it is designed to handle.

CRCFs
The mechanical handling system in the CRCFs receives transportation casks containing TAD canisters, DPCs and DOE HLW/SNF canisters; receives loaded aging overpacks containing TAD canisters; and receives empty waste packages. The mechanical handling system exports loaded waste packages to the emplacement and retrieval/drip shield installation system; exports TAD canisters and DPCs in aging overpacks to the Aging Facility, and exports empty transportation casks to be returned to the national transportation system. The CRCFs only receives canisterized waste forms; however, if a defective canister is detected, the cask and defective canister(s) are routed to the remediation system for processing, if available. (Refer to Sections 11.2.4 and 12.2.4 for waste package closure and waste package surface finish requirements). Because of clean canister transfer, the facility has a low potential for contamination and no confinement is necessary between the cask and the transfer room. Transfer of the various waste forms by the mechanical handling system is performed with several different handling devices. Each waste transfer handling device has a variety of grapples to accommodate all the waste forms that it is designed to handle.

WHF
The mechanical handling system in the WHF receives transportation casks containing either bare fuel or DPCs, loaded aging overpacks containing DPCs, unloaded STCs, unloaded aging overpacks, and empty TAD canisters. The mechanical handling system exports loaded TAD canisters in aging overpacks to the CRCFs or to the Aging Facility. The mechanical handling system also exports empty transportation casks to the national transportation system. In addition, the mechanical handling system in the WHF receives any waste forms that require remediation. Within the WHF only, the mechanical handling system is required to receive, cut open, transfer the bare fuel contents, and export empty DPCs to the Low-Level Radioactive Waste Management System. All bare fuel handling within the WHF is performed underwater. The transfer of the various waste forms by the mechanical handling system is performed with several different devices. Each waste transfer device has a variety of grapples to accommodate all the waste forms that it is designed to handle.

Receipt Facility

The mechanical handling system within the Receipt Facility receives rail-based transportation casks containing TAD canisters and DPCs. In addition, the Receipt Facility receives empty aging overpacks. The mechanical handling system exports loaded aging overpacks as well as the empty transportation casks. Because of clean canister transfer, the facility has a low potential for contamination and no confinement is necessary between the cask and the transfer room.

Aging Facility
The mechanical handling system within the Aging Facility provides for the transfer of canistered commercial SNF within aging overpacks from the Receipt Facility, CRCFs, and the WHF to the aging pads. The mechanical handling system delivers empty aging overpack to the facilities and exports loaded aging overpack for placement on the aging pad. The system also exports loaded transportation casks with horizontal DPCs to the aging pad and inserts the horizontal DPCs into HAMs. After the aging process is completed the TADs are delivered to the CRCFs for packaging and subsequent emplacement and the DPCs are delivered to the WHF for processing.

WNNRF
The mechanical handling system within WNNRF provides for the initial receipt and inspection of empty waste packages and associated components (e.g., lids), STCs, aging overpacks, new TAD canisters and lids, and DPC handling casks (for use with horizontal DPCs to the HAMs). The mechanical handling system provides for the delivery of these components as appropriate to the Receipt Facility, WHF, CRCFs. The mechanical handling system also supports the warehouse functions associated with the IHF.

Low-Level Waste Facility
The mechanical handling system provides for the delivery and handling of site-generated low level waste. This may include, but is not limited to, transporting and dispositioning DPC carcasses within STCs from the WHF, pool filters from the WHF, and HEPA filters from any of the nuclear facilities.

13.1.2 System Classification

13.1.2.1 Components Classified as ITS

The mechanical handling system has been classified as ITS. The following mechanical handling system equipment is ITS:

Cask Handling
- Transportation cask
- Site prime mover
- Cask handling yokes in the IHF, CRCFs, WHF, and Receipt Facility
- Pool cask handling yoke and pool yoke lift adapter in the WHF
- Cask handling crane(s) in the IHF, CRCFs, WHF, and Receipt Facility
- Cask transfer trolleys and pedestals in the IHF, CRCFs, WHF, and Receipt Facility
- Naval cask pedestal in the IHF
- Cask preparation crane in the IHF

Cask Handling/Cask Receipt
- Entrance vestibule crane in the WHF
- Lid bolting room crane in the Receipt Facility
- Naval cask lift bail and naval cask lift plate in the IHF
- Horizontal lifting beam in the Receipt Facility

Cask Handling/Cask Preparation
- Auxiliary pool crane in the WHF
- Preparation station jib cranes (1 and 2) in the WHF
- Cask support frame (preparation station #2) in the WHF
- Cask lid lifting grapples in the CRCFs and Receipt Facility
- Lid lifting grapples in the WHF
- Truck cask lid lifting grapples in the WHF
- Truck cask lid adapters in the WHF
- Rail cask lid adapters in the WHF, CRCFs, IHF and Receipt Facility

- Long reach grapple adapter in the WHF
- DPC lid adapters in the CRCFs, WHF and Receipt Facility

Cask Handling/Waste Package Preparation
- Waste package handling crane in the IHF and CRCFs

Waste Transfer/Fuel Assembly Transfer
- Spent fuel transfer machine in the WHF
- Lifting grapples (BWR and PWR) in WHF
- W74 upper basket lifting device in the WHF
- SNF staging racks in the WHF

Waste Transfer/Canister Transfer
- Truck cask handling frame in the WHF
- Canister transfer machine maintenance crane in the Receipt Facility
- Canister transfer machine in the IHF, CRCFs, WHF, and Receipt Facility
- Canister grapples in the IHF and CRCFs
- Canister transfer machine grapples in the IHF, CRCFs, WHF, and Receipt Facility
- Naval canister lifting adapter in the IHF
- DOE waste package inner lid grapple in the IHF
- Naval waste package inner lid grapple in the IHF
- TAD canister staging racks (and fire barrier) in the CRCFs
- DOE canister staging racks (and fire barrier) in the CRCFs
- DPC and TAD shielded transfer casks

Waste Package Closure
- Remote handling system bridge included as part of IHF and CRCFs

TAD Closure
- TAD closure jib crane in the WHF
- Cask support frame (TAD closure station) in the WHF

Waste Package Loadout
- Waste package shield rings in the IHF and CRCFs
- Waste package transfer trolley (including pedestals, seismic rail restraints, and rails) in the IHF and CRCFs

DPC Cutting
- DPC cutting jib crane in the WHF
- Cask support frame (DPC cutting station) in the WHF

[Preclosure NSDB (BSC 2008 [DIRS 184200]), Appendix A, Table A-1 specifically provides the ITS classification of the system and Appendix D, Table D-1 provides the functions. MGR-RD [DIRS 177491], Sections 3.1.2.G and 3.1.2.H provide specific direction that the naval canisters and the M-290 cask system will only be handled in the IHF (not CRCFs).]

13.1.2.2 Components Classified as Non-ITS

The following mechanical handling system equipment have been classified as non-ITS. The mechanical handling system does not include SSCs that are ITWI.

Cask Handling
- Platform shield plate in the CRCFs and Receipt Facility
- Decontamination pit equipment - spray nozzle in the WHF
- Decontamination pit equipment - pump module
- Long reach tool adapter in the WHF
- Horizontal cask stand in the Receipt Facility

- Mobile lift in the WHF, CRCFs and Receipt Facility

Cask Handling/Cask Receipt
- Cask tilting frame in the WHF, CRCFs and Receipt Facility
- Mobile access platform in the IHF, WHF, CRCFs and Receipt Facility
- Impact limiter and personnel barrier lifting devices in the IHF, WHF, CRCFs and Receipt Facility

Cask Handling/Cask Preparation
- Truck cask lid adapters in the IHF and CRCFs
- Cask lid bolt impact wrench in the Receipt Facility
- Cask shield ring in the WHF

Cask Handling/Waste Package Preparation
- Waste package pallet yoke in the IHF and CRCFs

Waste Transfer/Canister Transfer
- Canister transfer machine maintenance crane in the IHF, WHF, and CRCFs

Waste Package Closure
- Robotic arms in the IHF and CRCFs
- Portions of remote handling system that do not include the bridge, included as part of the IHF and CRCFs
- Remote handling system manipulator arm in the IHF and CRCFs
- Lid handling tool in the IHF and CRCFs
- Waste package closure room crane in the IHF and CRCFs
- Closure support room cranes in the CRCFs
- Process opening cover in the IHF and CRCFs

TAD Closure
- TAD canister welding machine in the WHF

Waste Package Loadout
- Waste package shield ring lift beam in the IHF and CRCFs
- Waste package transfer carriage in the IHF and CRCFs

DPC Cutting
- DPC cutting machine in the WHF
- Siphon tube shear tool in the WHF
- DPC lid receptacle in the WHF
- DPC adaptor plate types 1, 2, and 3 in the WHF
- DPC shield plug adapter in the WHF

In addition, the cask handling/cask restoration system and remediation system are non-ITS.

[Preclosure NSDB (BSC 2008 [DIRS 184200]), Appendix A, Table A-1 specifically provides the non-ITS classification of the system SSCs Appendix D, Table D-1 provides the functions. MGR-RD [DIRS 177491], Sections 3.1.2.G and 3.1.2.H provide specific direction that the naval canisters and the M-290 cask system will only be handled in the IHF (not CRCFs).]

13.2 Functional and Performance Requirements and Bases

13.2.1 Mission Requirements

13.2.1.1 Annual Receipt Rates

The mechanical handling system shall be designed to be capable of receiving SNF and HLW, mostly by rail at the system operating conditions and receipt rates, as specified below:

1 To satisfy the Initial Operating Capability, in the first year of operation, the repository shall:

   a. Accept and receive 400 MTHM of commercial SNF and HLW
   b. Accept and receive at least 3 naval SNF canisters
   c. Accept and receive 66 DOE SNF canisters and 193 DHLW canisters.
2. During years 2 through 4 of operation, the repository shall cumulatively:
   a. Accept and receive at least 3,800 MTHM of commercial SNF and HLW
   b. Accept and receive at least 15 naval canisters
   c. Accept and receive at least 257 DOE SNF canisters and 1,143 DHLW canisters.
3. To satisfy the Full Operating Capability, in year 5 operations, the repository shall:
   a. Accept and receive 3,000 MTHM of commercial SNF and HLW annually
   b. Accept and receive at least 15 naval canisters annually (See Note)
   c. Accept and receive 179 DOE SNF canisters and 763 DHLW canisters annually.

NOTE: NNPP activities can prepare up to 24 naval SNF canisters annually for shipment to the repository. For design purposes, this value (24) should be used for maximum receipt rates of naval SNF canisters.

[CRD (DOE 2007 [DIRS 182960]), Sections 3.2.1B and 3.2.1C, as flowed down through the MGR-RD [DIRS 177491], Section 3.1.1.J and 3.1.1.K. In the event that DOE determines that rail access to the repository will be unavailable to support system operating conditions and receipt rates, the acceptance rates above will not apply and will, instead, be based on the availability of truck transportation capability. Specific dates have been eliminated as they rely on annual funding and other conditions outside of contractor's control. Since the operations of the various repository facilities is dependent on DOE funding and authorization of construction of the facilities, the dates have been considered as changed by DOE in the annual work plans authorized each FY. IICD Volume 2 (DOE 2007 [DIRS 176810]), Section 3.1.2.1 also contains this information.]

13.2.1.2 Waste Acceptance Requirements

13.2.1.2.1 Canister Systems

The mechanical handling system shall be designed to receive and accommodate the TAD canister, the TAD Aging Overpacks, and the TAD transportation cask system components described by the *Transportation, Aging, and Disposal Canister System Performance Specification* (DOE 2007 [DIRS 181403]).

[The MGR-RD [DIRS 177491], Section 3.1.2.F provides direction to include the TAD canisters. The allocation to the Mechanical Handling System was provided in Criterion 2.2.1.11.]

13.2.1.2.2 Deleted

[Transportation requirements have been deleted from the WASRD (DOE 2007 [DIRS 169992]), Section 4.9 and moved in the TSRD (DOE 2006 [DIRS 181305]). Transportation cask systems are the means by which SNF and HLW (including IPWF) and naval SNF are received into and transported by the CRWMS and delivered to the repository.]

13.2.1.2.3 Railroad Shipments

The mechanical handling system shall be able to receive and accommodate rail shipments with the following characteristics:

1. Railroad shipments made under the AAR standard of unrestricted interchange.
2. The transportation cask system, including impact limiters, tie-downs, and other related transportation equipment, will be compatible with AAR Plate F dimensions.
3. The combined railcar/cask carrier (gross railcar, cask, skid, and impact limiters) not exceeding 65,750 lb gross weight per axle (e.g., 263,000 lb gross weight for a 4-axle railcar, 394,500 lb for a 6-axle railcar, or 526,000 lb for an 8-axle railcar) (except for naval shipments).
4. The maximum combined railcar/cask carrier weight for shipments of naval SNF will not exceed 789,000 lb.

[IICD Volume 1 (DOE 2007 [DIRS 178792]), Appendix C, Figure C-1. AAR 2004 [DIRS 169910] provides for a restricted interchange and plate.]

13.2.1.2.4 Deleted

[Transportation requirements have been deleted from the WASRD (DOE 2007 [DIRS 169992]), Section 4.9 and moved in the TSRD (DOE 2006 [DIRS 181305]. The interface requirements were moved in the IICD Volume 1 (DOE 2007 [DIRS 178792]).]

13.2.1.2.5 Cask Sizes

The mechanical handling system shall be designed to accommodate truck and rail transportation casks having dimensions shown in Table 13-1 which summarizes bounding characteristics for rail cask designs for use in the CRWMS for the 10% of the CSNF that will not use the TAD canister transportation overpack and the DOE coordinated wastes. The mechanical handling system shall also be designed to accommodate rail-based TAD canister transportation casks (which are not shown in Table 13-1). Truck casks are significantly smaller in size and weight than rail casks; thus, Table 13-1 bounds truck cask designs.

Table 13-1. Rail Transportation Cask Bounding Characteristics (Excluding the TAD Canister Transportation Overpack)

Characteristic	CSNF Design (Min-Max)	CSNF Purchasing (Min-Max)	DOE Casks (Max) [g]	Naval M-290 Casks (Max) [d]	Ref. Dim. [a]
Cask length without impact limiters (in.)	182-234	200-225	234	345	A
Cask diameter without impact limiters (in.)	40-108	44-98	100 [f]	108	C
Cask length with impact limiters (in.)	220-370	242-333	340	375	B
Cask diameter with impact limiters (in.)	65-144	72-140	144	128	F
Distance across upper trunnion (in.)	40-120	44-108	108	128	D
Cask closure lid diameter (in.)	20-88	22-79	--	--	E
Cask closure lid weight (lb)	<15,000	<15,000	--	--	--
Cask weight when fully loaded (lb) [b]	<280,000	<280,000	--	590,000 [e]	--
Impact limiter maximum weight, pair (lb)	25,000	25,000	--	--	--
Max height of the centerline of the upper cask trunnions above the floor or rail upon which the conveyance rests during upending and removal of cask from conveyance (in.)	296	330	--	--	--
Maximum distance between centerline of upper trunnions and top of cask (in.)	46	51	--	--	G
Maximum distance between centerline of lower trunnions and bottom of cask (in.)	51	56	--	--	H
Minimum available crane under-hook clearance (in.) [c]	480	480	--	--	--

[a] Letters in "Reference Dimension" column refer to the dimensions identified in Figure 13-1.

[b] Without impact limiters installed.

[c] Minimum distance from the facility floor surface to the palm of the crane hook at its maximum elevation

[d] Naval M-290 cask will fit within a shipping clearance envelope of AAR Plate F

[e] Naval M-290 cask weight has at least one impact limiter attached.

[f] If the trunnions are removable.

[g] Rail casks will bound the dimensions of truck casks (with impact limiters attached, 245 in. long by 96 in. diameter and without impact limiters 200 in. long by 48 in. diameter (at the trunnions)).

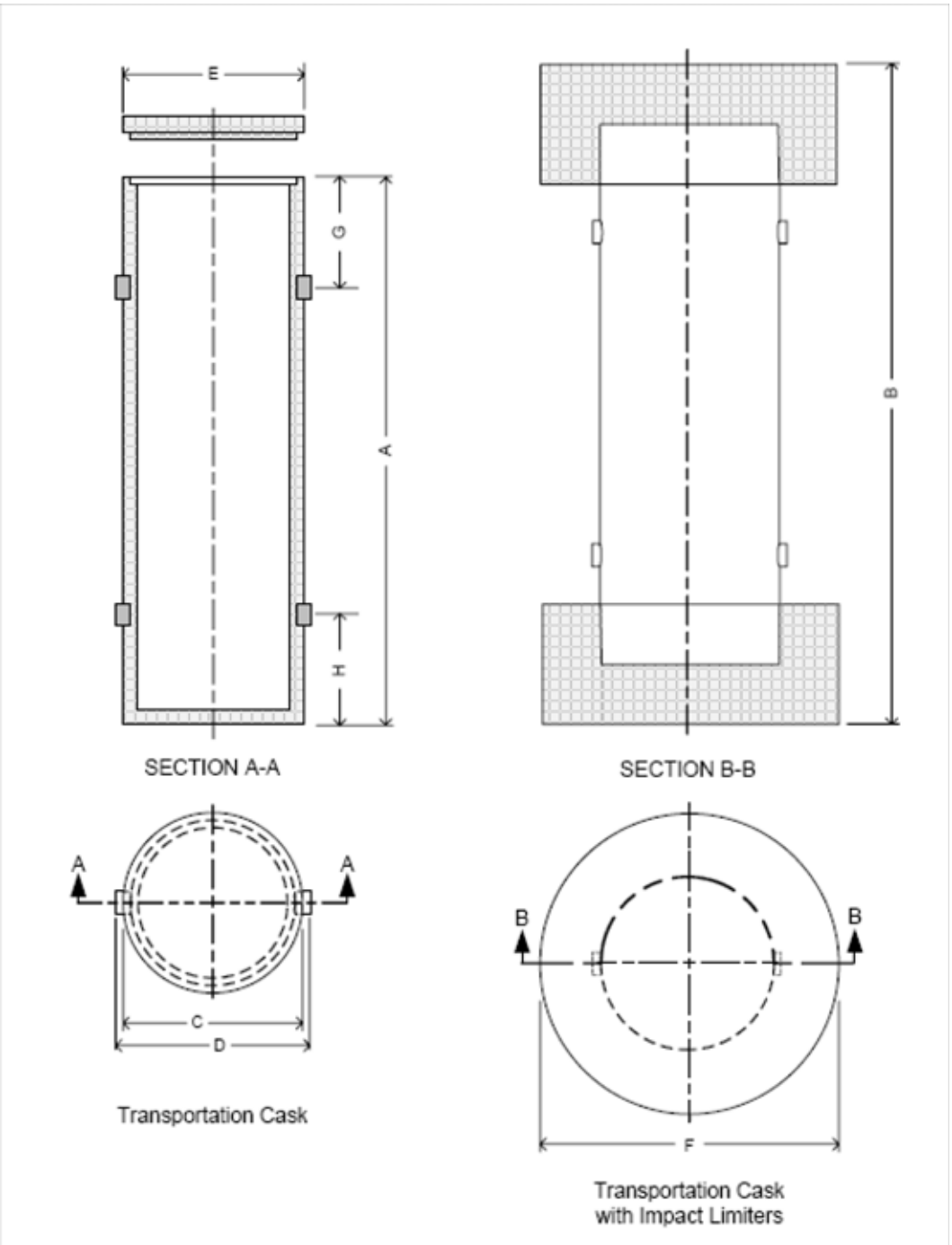

Figure 13-1. Generic Transportation Cask Illustrating the Location of Dimensions

[Casks acquired for use by Transportation for CSNF should have characteristics within the limits given in the column labeled "Purchasing" in Table 13-1. IICD Volume 2 (DOE 2007 [DIRS 176810]), Section 3.1.2.2 provides this information. IICD,Volume 1 (DOE 2007 [DIRS 178792]), Section 7.2 and Figures B-4 and C-3.]

13.2.1.2.6 Envelope Interfaces

The mechanical handling system shall accommodate a loaded railroad transporter with the maximum envelope as specified for naval SNF, which is shown as an interface on IICD Volume 1 (DOE 2007 [DIRS 178792]), Figure C-1.

Railroad shipment dimensions include:

1. Railroad shipments made under the AAR standard of unrestricted interchange (AAR 2004 [DIRS 169910]).
2. The transportation cask system (including impact limiters, tie-downs, and other related transportation equipment) shall be compatible with AAR Plate F clearance dimensions.
3. The combined railcar/cask carrier (gross railcar, cask, skid, and impact limiters) shall not exceed 65,750 lb gross weight per axle (e.g., 263,000 lb gross weight for a 4-axle railcar, 394,500 lb for a 6-axle railcar, or 526,000 lb for an 8-axle railcar).
4. The maximum combined railcar/cask carrier weight for shipments of naval SNF shall not exceed 789,000 lb.
5. Cask railcars having a maximum width of 128 in.
6. Cask railcars having a maximum length of 90 ft.
7. Cask railcars having a coupler-to-coupler distance of 93 ft 4 in. (based on a review of rail industry rolling stock)

Truck-based transportation casks containing SNF and HLW on trucks and trailers shall have the following maximum characteristics:

- LWT with the combined legal weight of the truck/cask carrier not exceeding a tandem axle gross weight of 34,000 lb and an overall gross weight of 80,000 lb.
- OWT with the combined weight of the truck/cask carrier being greater than 80,000 lbs gross vehicle weight, but not more than 90,000 to 105,000 lbs depending on the particular state transited.
- LWT or OWT flatbed trailers with a maximum width of 102 in.
- LWT or OWT flatbed trailers with a maximum length of 53 ft.

[IICD Volume 1, Section 7.6 provides reference to Appendix C, Figure C-1 and a discussion of transporters. IICD Volume 2 (DOE 2007 [DIRS 176810]), Section 3.1.10 provides additional input. Although IICD Volume 2 refers to a 1992 version of AAR, the repository will utilize AAR 2004. Repository auxiliary equipment and parking area interfaces are currently bounded by the repository designs for the potential generic building doors and setbacks and are not shown separately. A state may not limit the length of a semitrailer in a truck tractor-semitrailer combination to less than 48 ft or less than a grandfathered length. Although the grandfathered length limit is 53 ft for the State of Nevada, approximately half of the remaining states limit trailer length to 48 ft.]

13.2.1.2.7 Transportation Casks Types

The mechanical handling system shall be designed to receive and handle the following transportation cask designs (non-inclusively):

- GA-4
- GA-9
- NAC-LWT
- NAC-STC
- NAC-UMS
- MP-187 Multi-Purpose Cask
- MP-197 Multi-Purpose Cask
- TN-68 TSC
- TN-32
- HI-STAR 100
- TranStor TS-125
- Naval M-290
- TAD Transportation Cask

[TSRD (DOE 2006 [DIRS 181305]), Section 3.2.1.1c identifies the transportation casks to be utilized in accordance with 10 CFR 71 [DIRS 181967]. Certification requirements were specified in MGR-RD [DIRS 177491], Section 3.1.2.C and CRD (DOE 2007 [DIRS 182960]), Section 3.2.1I. Naval transportation cask requirements were flowed down from MGR-RD, Section 3.1.2.G and the IICD Volume 1 (DOE 2007 [DIRS 178792]). The MP-197 cask was added to the list because it was developed and submitted to the NRC after DOE provided the initial TSRD list. The MP-187 handles one waste form and the MP-197 handles the other. The MP-197 is expected to have similar stature in future revisions of the TSRD. Although the TranStor TS-125 (from BNFL Fuel Solutions, previously TranStor) cask system may not be licensed by the NRC, it is included here as a surrogate for potential future cask designs.]

13.2.1.2.8 Deleted

[Although BCP YMP-2006-053 [DIRS 177483], block 11, Page 6 of 1159, initially identified a specific trolley design as a requirement, DOE recently indicated that the trolley design is not a DOE Level 2 requirement, but a design feature that BSC could change within the thresholds of the baseline change process. Therefore, BSC deleted the specific trolley design in TMRB-2007-011 (BSC 2007 [DIRS 182004]), TMRB Decision Proposal, Initial Handling Facility Seismic Design Basis.]

13.2.1.2.9 Fuel Handling

The mechanical handling system within the WHF shall receive, handle, and repackage bare commercial SNF that meets the requirements specified in 10 CFR 961 [DIRS 182678], as modified by individual Purchaser contracts, into TAD canisters, underwater. Bare SNF shall be handled in a standard industry fashion to limit damage and prevent unzipping of fuel rod cladding.

[WASRD (DOE 2007 [DIRS 169992]), Section 4.1. Commercial SNF may include both UO2 SNF and MOX SNF from commercial power reactors and SNF from privately owned commercial research reactors, such as those owned by General Atomics (GA), Aerotest, Dow, or General Electric, where the latter are expected to include both low-enriched uranium and high-enriched uranium currently covered by these contracts. Postclosure Modeling and Analysis Design Parameters (BSC 2008 [DIRS 183627]), Table 1, item # 04-02.]

13.2.1.2.10 Contamination Prevention

The inner lid (or shield plug) shall be placed on the TAD canister or waste package while it is in the transfer area or closure room to prevent spread of contamination from inside the TAD canister or waste package. For the TAD canister, the inner lid shall ensure the TAD canister contents are not ejected in the event of a handling mishap during transport to the closure area.

[PO&PR (BSC 2008 [DIRS 185008]), Section 2.2.22]

13.2.1.2.11 DOE Generated SNF Disposable Canisters

The mechanical handling system shall be able to receive, handle, and repackage all DOE-generated SNF, foreign research reactor fuel, and some domestic research reactor fuel, except as noted in WASRD (DOE 2007 [DIRS 169992]), Section 4.2.3.D, placed in sealed disposable canisters into waste packages. The DOE SNF canisters shall be compatible with all applicable requirements in the WASRD, Section 4.3, before acceptance into the repository.

[WASRD (DOE 2007 [DIRS 169992]), Sections 4.2.3.A, 4.2.3.D, and 4.3. This criterion also partially satisfies PO&PR (BSC 2008 [DIRS 185008]), Section 2.6.2.]

13.2.1.2.12 DOE SNF of Commercial Origin

The mechanical handling system shall be able to receive, handle, and repackage DOE SNF of commercial origin into waste packages having handling features interchangeable with either BWR or PWR fuel assemblies and be known to have no defects, and in the same manner as commercial SNF as specified in 10 CFR 961 [DIRS 182678].

[WASRD (DOE 2007 [DIRS 169992]), Section 4.2.3.D. All DOE SNF of commercial origin that (a) cannot be shown to have handling interfaces functionally interchangeable with those of an intact assembly from either a commercial BWR or PWR, or (b) has known or suspected defects (to either structural components or to cladding beyond hairline cracks or pinhole leaks), such that the SNF requires isolation or special handling, will be placed in a disposable canister before acceptance into the CRWMS.]

13.2.1.2.13 Handling DOE SNF Standardized Canisters

The mechanical handling system within the CRCFs shall handle DOE SNF standardized canisters with interfaces shown on IICD Volume 1 (DOE 2007 [DIRS 178792]), Figures C-4 through C-14.

[IICD Volume 1, Section 10.1.2 and Figures C-4 and C-5 provide interfaces for the 18-in. diameter standardized SNF canisters illustrated in the IICD. The maximum canister-handling fixture envelope for the 18-in. diameter standardized canisters (both lengths having the same handling interface) is shown in Figure C-6. Figures C-7 and C-8 provide the dimensional interfaces for the 18-in. diameter standardized SNF canisters and the waste package. Figures C-9 and C-10 provide interfaces for the 24-in. diameter standardized SNF canisters. The maximum canister handling fixture envelope is shown in Figure C-11 for the 24-in. diameter standardized SNF canisters (both lengths having the same handling interface). Figures C-12 and C-13 for the dimensional interfaces for the 24-in. diameter standardized SNF canisters and the waste package are placeholders.

The National Spent Nuclear Fuel Program (NSNFP) standardized canisters must fit within various repository surface facility envelopes and handling equipment parameters as well as into the envelope in the appropriate disposal container. The facility envelopes are primarily the small canister staging racks. The staging rack positions or cells are uniform and have the same dimensions. The length and diameter of the 24-in. diameter standardized canisters and other canisters bound the length of the 18-in. diameter by 15-ft long standardized canisters; therefore, their interface with the staging rack is not shown.

The largest diameter canister interface with the staging rack is the MCO identified in Section 10.2 and shown on Figure C-14. The smallest SNF canister interface with the small canister staging rack is with the 18-in. diameter by 10-ft long canister and is shown on Figure C-14. Weight restrictions for each of the NSNFP standardized canisters are identified on the corresponding figures. Although DOE-EM provided handling details of the NSNFP standardized canister (i.e., skirt and lifting ring dimensions), mechanical details for the handling fixture have not been provided for either the 18-in. diameter or the 24-in. diameter canisters. The lifting fixtures, however, are constrained to operate within the nominal diameter of the canister.]

13.2.1.2.14 Deleted

[The requirement for single-element canisters dimensional envelope have been deleted from [WASRD (DOE 2007 [DIRS 169992]), Section 4.5.]

13.2.1.2.15 Deleted

[The requirement for single-element canisters weight have been deleted from [WASRD (DOE 2007 [DIRS 169992]), Section 4.5.]

13.2.1.2.16 Deleted

[The requirement for multiple-element canisters envelope and weights have been deleted from [WASRD (DOE 2007 [DIRS 169992]), Section 4.5.]

13.2.1.2.17 Maximum Lift Height of Multi-Element Canisters

The mechanical handling system shall be designed so that when dropped from the maximum lift height (a flat-bottom drop from a height of 23 ft and a drop in any orientation from a height of 2 ft (individually-not both in sequence) onto an essentially unyielding surface), the various DOE canisters do not release radionuclides.

[WASRD (DOE 2007 [DIRS 169992]), Section 4.3.5. For the flat-bottom drop, this requirement can be met by limiting canister impact loads through design of the cask-canister system and disposal container-canister system.]

13.2.1.2.18 HLW Canister Drop Capability

The HLW canisters shall be capable of withstanding a drop of 7 meters (23.0 ft) onto a flat, essentially unyielding surface without breaching or dispersing radionuclides.

[WASRD (DOE 2007 [DIRS 169992]), Section 4.8.8]

13.2.1.2.19 Naval SNF

The mechanical handling system shall be able to receive, handle, and repackage all naval SNF canisters accepted into the repository.

[WASRD (DOE 2007 [DIRS 169992]), Section 4.2.3.B. MGR-RD [DIRS 177491] Sections 3.1.2.G and 3.1.2.H provides specific direction that the naval canisters and the M-290 cask system will only be handled in the IHF (not CRCFs).]

13.2.1.2.20 Vitrified HLW

The mechanical handling system shall be able to receive, handle, and repackage all vitrified HLW canisters accepted into the repository.

[WASRD (DOE 2007 [DIRS 169992]), Section 4.2.3.C.]

13.2.1.2.21 Deleted

[The requirement for the acceptable disposable canisters for DOE SNF of commercial origin have been deleted from WASRD (DOE 2007 [DIRS 169992]), Section 4.2.3.]

13.2.1.2.22 DOE SNF Debris of Commercial Origin

The mechanical handling system shall be able to receive, handle, and repackage DOE SNF debris of commercial origin contained in either single-element-sized disposal containers or in a canister designed for DOE-generated SNF.

[WASRD (DOE 2007 [DIRS 169992]), Section 4.2.3.E. Prior to acceptance into the repository, DOE-SNF debris of commercial origin (including individual fuel rods, pieces of a fuel rod, or any mixture of SNF and non-fuel material) will be placed in a canister designed for DOE generated SNF, as defined in WASRD, Section 4.3.]

13.2.1.2.23 Non-Fuel Components

The mechanical handling system shall be able to receive, handle, and repackage non-fuel components associated with DOE SNF of commercial origin, where non-fuel components no longer physically inserted into an assembly are placed into any of the various disposable canisters acceptable to the repository.

[WASRD (DOE 2007 [DIRS 169992]), Section 4.2.3.F.]

13.2.1.2.24 Canister Lifting Fixture

The mechanical handling system shall conduct all vertical lifts and horizontal translations of DOE SNF, naval SNF, and multi-element disposable SNF canisters while suspending the canisters from above via their lifting features.

[WASRD (DOE 2007 [DIRS 169992]), Sections 4.3.2, 4.4.2 and 4.8.5.]

13.2.1.2.25 Read Canister Labels

The mechanical handling system shall be designed to allow for reading the unique identifier that is permanently attached to disposable DOE SNF, naval, multi-element DOE SNF, and HLW canisters, and provide for recording information for the traceability to the permanent records of the canister and its contents.

[WASRD (DOE 2007 [DIRS 169992]), Sections 4.3.4, 4.4.4 and 4.8.7.]

13.2.1.2.26 Thermal Output

The mechanical handling system shall be able to receive, transfer, and repackage the following:

1. DOE SNF canisters having a maximum thermal output of 1,970 W (6,720 BTU/hr)
2. Naval spent fuel canisters having a baseline maximum thermal power of 11.8 kW at the time of acceptance into the repository
3. Canisters containing HLW having a maximum thermal output of 1500 W/canister.

[WASRD (DOE 2007 [DIRS 169992]), Sections 4.3.9, 4.4.9, and 4.8.13.]

13.2.1.2.27 Lifting HLW Canisters

The mechanical handling system shall be designed to lift the standard vitrified HLW form, which is borosilicate glass sealed inside an austenitic stainless steel canister(s), from a concentric neck and lifting flange.

[WASRD (DOE 2007 [DIRS 169992]), Section 4.8.1.A.]

13.2.1.2.28 HLW Canister Size

The mechanical handling system shall be designed to receive, handle, and repackage the HLW form that can stand upright without support on a flat horizontal surface and fit without forcing into a right-circular, cylindrical cavity, which is 25 in (64 cm) diameter and 9.88 ft (3.01 m) length or alternatively 25 in (64 cm) diameter and 14.8 ft (4.51 m) length.

[WASRD (DOE 2007 [DIRS 169992]), Section 4.8.3. Although the WASRD Section 4.8.3 identifies a free-standing HLW canister height as 4.51 m, this is distinctly different than the nominal height of 4.57 m that is identified in Criterion 11.2.2.7. Note that the nominal height is actually larger than the allowable free-standing height. This dimension also happens to be different than the waste package interface cavity length documented in Criterion 11.2.2.7 citation to Figure C-25 of the IICD Volume 1 (DOE 2007 [DIRS 178792]). CBCN004 to Revision 001 provided this change.]

13.2.1.2.29 HLW Canister Weight

The mechanical handling system shall be designed to receive, handle, and repackage HLW canisters with a maximum weight of 9,260 lb (4,200 kg).

[WASRD (DOE 2007 [DIRS 169992]), Section 4.8.4.]

13.2.1.2.30 HLW Canister Grapple

The mechanical handling system shall be able to receive, handle, and repackage HLW canisters where:

1. The producer will provide a grapple design suitable for use in loading or unloading a transportation cask with a standard 3.0 m (9.9 ft) HLW canister or a standard 4.5 m (15 ft) canister.
2. The grapple, when attached to the hoist and engaged with the flange, will be capable of moving the canistered waste form in the vertical direction.
3. The grapple will be capable of being remotely engaged with and remotely disengaged from the HLW canister flange.
4. The grapple will be capable of being engaged or disengaged while remaining within the projected diameter of the waste form canister.
5. The grapple will include safety features that prevent the inadvertent release of a suspended canistered waste form.

[WASRD (DOE 2007 [DIRS 169992]), Section 4.8.5.]

13.2.1.2.31 Deleted

[The requirements for IPWF canisters have been deleted from the WASRD (DOE 2007 [DIRS 169992]), Section 4.8.]

13.2.1.2.32 Tamper-Indicating Seal Removal

The mechanical handling system, in conjunction with the respective processing facility, shall remove any tamper-indicating seals or locks from transportation casks for strategic special nuclear material.

[10 CFR 70.51 [DIRS 182681], 10 CFR 73.26 [DIRS 181969] and WASRD (DOE 2007 [DIRS 169992]), Sections 4.2.9.A and 4.2.9.B.]

13.2.1.2.33 Cask Hook Weight

The mechanical handling system shall be designed for the maximum hook weight for any lift of the loaded rail cask of 400,000 lbs (including lifting features, personnel barriers, and impact limiters), or alternately 600,000 lbs for handling the M-290 naval SNF cask (IHF only).

[The requirement for the naval M-290 SNF cask is promulgated in the MGR-RD [DIRS 177491], Section 3.1.2.G. TSRD (DOE 2006 [DIRS 181305]), Section 3.2.1.1.1. includes lifting features, personnel barriers, and impact limiters in the loaded cask weight. The 400,000 lbs value exceeds the casks weights allowed by IICD Volume 2 (DOE 2007 [DIRS 176810]), Section 3.1.13 (305,000 lbs in Criterion 4.2.1.10.17) and the 360,000 lbs specified in Transportation, Aging, and Disposal Canister System Performance Specification (DOE 2007 [DIRS 181403]), Section 3.2 for casks other than the naval cask.]

13.2.1.2.34 DPCs

The mechanical handling system shall also be designed to receive and accommodate the DPC, the DPC Aging Overpacks, and the DPC transportation cask system components.

[This requirement was derived based on the knowledge that we have to receive DPCs in the repository.]

13.2.1.3 Remediation

The mechanical handling system shall be designed to repair/rework waste packages or canisters.

- Damaged items shall be inspected to determine the severity of damage.
- Nonconforming items shall be repaired or reworked, as appropriate, to meet WP loading requirements.
- Sealed, damaged WPs and TAD canisters shall be vented, purged, and opened as required.
- Necessary SSCs shall be provided to transfer failed, damaged, or noncompliant SNF and HLW in cask and/or canisters
- Once recovery from the off-normal condition has been completed, the SNF and HLW shall be returned to the SNF and HLW processing operations.

[PO&PR (BSC 2008 [DIRS 185008]), Sections 2.4.3, 2.4.5, 2.4.6, and 2.4.7.]

13.2.1.4 Failure of Moving Capability

Failure of primary moving capability shall not result in the SNF or canisters being in an unsafe or unanalyzed configuration.

[PO&PR (BSC 2008 [DIRS 185008]), Section 2.4.1.]

13.2.1.5 Transport Vehicle Retrieval

The capability shall be provided to retrieve transport vehicles carrying loaded transportation casks, STCs, AOs, or WPs, should they fail to respond to normal operations. The design(s) of the transport vehicles shall allow for retrieval in situations of:

- Normal operation
- Derailment
- Wheel failure
- Loss of power
- Other off-normal events.

[PO&PR (BSC 2008 [DIRS 185008]), Section 2.4.2.]

13.2.2 General Requirements

13.2.2.1 IICD Volume 1 Compliance

The mechanical handling system design shall comply with the agreements established under the IICD Volume 1 (DOE 2007 [DIRS 178792]) to ensure compatibility of HLW and DOE SNF waste forms with repository surface facility interfaces, including canister handling interfaces and compatibility between transportation equipment (e.g., transporters) and transported items (e.g., casks and canisters) with mechanical and envelop interfaces.

[This requirement was dictated in the CRD (DOE 2007 [DIRS 182960]), Section 3.2.1H and flowed down through the MGR-RD [DIRS 177491], Section 3.1.2.B.]

13.2.2.2 Dimensions

Dimensions for transporters and transportation system casks and canisters are measured at a temperature of 70ºF ± 8ºF unless otherwise specified.

[IICD Volume 1 (DOE 2007 [DIRS 178792]), Assumption 5.1. Many of the IICD figures contain measurements that include tolerance stackups including for thermal expansion. Specific use of the temperature/tolerance stackups is only noted on the appropriate figures.]

13.2.2.3 Horizontal Cask Receipt and Vertical Handling

The mechanical handling system shall receive transportation casks in a horizontal orientation, rotate the casks to a vertical orientation, and then handle the casks while in the vertical orientation. After removing the transportation cask from the transporter, the vertical-handling concept includes moving and lifting transportation casks, and removing waste forms from transportation.

Repository surface facilities design is also based on receiving casks transporting uncanistered DOE SNF of commercial origin in a horizontal orientation. The casks are rotated to a vertical orientation, and then handling of the casks occurs while they are in a vertical orientation. After removing the transportation casks from the transporter, this vertical-handling concept includes moving and lifting transportation casks; removing DOE-owned, commercial-origin fuels from transportation casks; and loading DOE-owned, commercial-origin fuel assemblies into disposable canisters for subsequent placement into waste packages.

[IICD Volume 1 (DOE 2007 [DIRS 178792]), Assumptions 5.2.a. and 5.2.b.]

13.2.2.4 Skid Handling

Although current surface facility concepts do not anticipate removal of any cask shipping skid, mechanical handling system design shall facilitate lifting the loaded package in its transportation configuration, including the skid and impact limiters, and transfer of the package from one conveyance to another. The mechanical handling

system shall be designed to handle rail or legal-weight truck transportation systems directly. Truck casks will be delivered without handling skids. Mechanical handling system equipment shall be designed to lift the skid with the following bounding characteristics.

- 124 in. maximum width
- 318 in. maximum length (between lift points)
- 360 in. maximum length (overall)
- 150 in. maximum Height (to top of personnel barrier)
- Exactly 4 Lifting Points

[IICD Volume 2 (DOE 2007 [DIRS 176810]), Section 3.1.11.1 & 2. Some rail shipments (e.g., shipments of the casks listed in IICD Volume 2, Table B-3 of Appendix B) may be attached to conveyances using methods other than skids. Such deliveries will be made only after advance notification to the MGR and will be delayed until necessary procedures are developed and special equipment is acquired. The Holtec International HI-STAR 100 transportation cask cannot be up-ended while on the handling skid fixed to the conveyance. This particular cask will either need to be handled by the intermodal skid or be removed from the skid in a horizontal orientation and placed on a separate, temporary skid. Once on the temporary skid, the impact limiters can be removed. Then, the transportation cask must then be lifted horizontally and placed on an L-Frame, or similar device for up ending. Thus, while the skid may not be removed from the conveyance for the HI-STAR 100, a separate skid and up ending device will be required. For more specific handling operations and information, see Chapter 7-Operating Procedures, of Storage, Transport, and Repository Cask System, (Hi-Star Cask System) Safety Analysis Report, 10 CFR 71, Docket 71-9261 (Holtec International 2003 [DIRS 172633]).]

13.2.2.5 Disposability Requirement

All disposable canisters received containing naval and DOE-EM SNF, except for DOE-EM-owned SNF accepted for management using the commercial-origin receipt/disposal system, will have been evaluated to demonstrate that they meet applicable disposability requirements for disposable canisters.

[IICD Volume 1 (DOE 2007 [DIRS 178792]), Assumptions 5.4 and 5.15.]

13.2.2.6 No Handling Canister Contents

The contents of disposable canisters shall not require handling in the mechanical handling system.

[IICD Volume 1 (DOE 2007 [DIRS 178792]), Assumption 5.6. As a cautionary measure, internal configuration details of the canister contents will be included with the data package provided by DOE-EM to OCRWM with the SNF to assess handling capability during off-normal events. Internal configuration details will not be provided for naval SNF.]

13.2.2.7 Personnel Barriers

The mechanical handling system shall remove or retract personnel barriers from around the cask.

[IICD Volume 1 (DOE 2007 [DIRS 178792]), Section 8.1 and IICD Volume 2 (DOE 2007 [DIRS 176810]), Section 3.1.12.. Following initial radiological inspection and the determination that decontamination is not needed, and for casks equipped with removable personnel barriers, the personnel barriers may be removed at the repository preliminary inspection area just inside security area using portable cranes. Such removed personnel barriers may be stored inside the security area until the cask is unloaded and emerges fully prepared for transportation at which time the personnel barrier will be reinstalled. Personnel barriers are generally cages placed around the transportation system cask barrel and between the impact limiters to restrict personnel access to the cask surface. Personnel barriers will be included as part of the transportation system by the Regional Servicing Contractor or NNPP, as applicable. Personnel barrier details, such as fastener and lifting connections dimensions, for transportation systems to be used to ship DOE-EM and naval SNF and DOE HLW are not currently available based on the stage of transportation system design or specification. Since personnel barrier details are not currently available due to the stage of the current transportation system selection and design, interface parameters are not included at this time. This criterion also meets PO&PR (BSC 2008 [DIRS 185008]), Section 2.2.7.]

13.2.2.8 Impact Limiters

The mechanical handling system shall remove impact limiters from the cask.

[IICD Volume 1 (DOE 2007 [DIRS 178792]), Section 8.2. Impact limiters are energy-absorbing cylindrical, conical, or domed structures affixed at the ends of the transportation system casks during shipment. They will be included as part of the transportation system by the Regional Servicing Contractor or NNPP, as applicable. Impact limiter details, such as fastener and lifting connections dimensions, for transportation systems to be used to ship DOE-EM and naval SNF and DOE HLW, are not currently available based on the stage of transportation system design or specification. Since impact limiter details are not currently available due to the stage of the current transportation system selection and design, interface parameters are not included at this time. This criterion also meets PO&PR (BSC 2008 [DIRS 185008]), Section 2.2.7.]

13.2.2.9 Hold-down Features

The mechanical handling system shall remove the hold-down features from the cask.

[IICD Volume 1 (DOE 2007 [DIRS 178792]), Section 8.3. Hold-down features are used to restrain the movement of the cask on the transportation system skid. They may consist of straps circling the cask body that are bolted to the skid or pillow blocks or clamps that are bolted around the cask trunnions. Strap type hold-down features restrain only vertical movement of the transportation cask on the skid and require additional features to restrain horizontal movement. Pillow block and clamp type hold-down features restrain vertical and horizontal movement of the transportation cask on the skid. The hold-down features will be included as part of the transportation system by theRegional Servicing Contractor or NNPP, as applicable. The hold-down feature details, such as fastener and lifting connection dimensions, for transportation systems to be used to ship DOE-EM and naval SNF and DOE HLW, are not currently available based on the stage of transportation system design or specification. Since hold-down feature details are not currently available due to the stage of the current transportation system selection and design, interface parameters are not included at this time. This criterion also meets PO&PR (BSC 2008 [DIRS 185008]), Section 2.2.7.]

13.2.2.10 Shielded Transfer Casks

The mechanical handling system shall provide three types of STCs that shall work in conjunction with the TAD canister to meet objectives of *Transportation, Aging, and Disposal Canister System Performance Specification* (DOE 2007 [DIRS 181403])] for:

(1) handling TAD canisters in the WHF
(2) horizontal transfers between the Horizontal Aging Module at an Aging Pad and the WHF, and
(3) utilized at the WHF for transferring a DPC from a transportation cask to facilitate DPC cutting and unloading in the pool.

[Although the MGR-RD [DIRS 177491] Section 3.1.2.F provided direction to include the TAD, the two performance specification reports were identified in DOE CO Letter 07-005 (Hamilton-Ray 2006 [DIRS 178596]) and an amendment (Hamilton-Ray 2006 [DIRS 178597]) was provided, only the letter provided this direction. The allocation to the mechanical handling system was provided in Criterion 2.2.1.11.]

13.2.2.11 Site Transporter and Ancillary Equipment

The mechanical handling system shall provide a site transporter and ancillary equipment that shall work in conjunction with the TAD canister to meet objectives of *Transportation, Aging, and Disposal Canister System Performance Specification* (DOE 2007 [DIRS 181403]). Ancillary equipment to be provided are listed in IICD Volume 2 (DOE 2007 [DIRS 176810]) Section 3.1.19, Table 5.

[Although the MGR-RD [DIRS 177491], Section 3.1.2.F provided direction to include the TAD canisters, two performance specification reports were identified in DOE CO Letter 07-005 (Hamilton-Ray 2006 [DIRS 178596]). The amendment (Hamilton-Ray 2006 [DIRS 178597]) provided direction that BSC provide these components. The allocation to the Mechanical Handling System was provided in Criterion 2.2.1.11. IICD Volume 2 (DOE 2007 [DIRS 176810]), Section 3.1.19.provides for ancillary equipment comprising those unique adapters and other tools, fixtures, stands, and so forth needed to process the transportation cask and its contents.]

13.2.2.12 South Texas TAD

The mechanical handling system, including the cask transfer trolley and the canister transfer machine, shall be designed to accommodate the South Texas transportation cask, the South Texas TAD canister, and the South Texas aging overpack without modification, in accordance with the following criteria:

- The TAD canister shall contain 12 fuel assemblies
- The aging overpack shall be 23'-6" in length, with a weight no greater than 400,000 pounds (including lifting features, personnel barriers, and impact limiters
- The TAD canister shall be 230 inches long by 52 inches in diameter and shall weigh no more than 100,000 pounds
- The waste package shall be 248 inches long by 63 inches in diameter and shall weigh no more than 125,000 pounds
- The transportation cask shall be 21'-6" long, without impact limiters, and shall weigh no more than 330,000 pounds

[TMRB-2007-025 (BSC 2007 [DIRS 181499]), Activities Not to Preclude Handling of South Texas Commercial Spent Nuclear Fuel in the Surface Facilities. TSRD (DOE 2006 [DIRS 181305]), Section 3.2.1.1.1. includes lifting features, personnel barriers, and impact limiters in the loaded cask weight.]

13.2.2.13 SNF Processing

SNF shall be processed such that, if required, the following actions can be performed: (1) load bare CSNF into a TAD canister underwater, (2) package canistered SNF in a WP to meet thermal limits, or (3) place canistered CSNF in an AO for transport to the Aging Facility prior to emplacement.

[PO&PR (BSC 2008 [DIRS 185008]), Section 2.2.3.]

13.2.2.14 Transportation Within/Between Facilities

WPs, horizontal STCs, and AOs shall be capable of being transported within and between the repository facilities. Vertical STCs shall be capable of being transported within the WHF.

[PO&PR (BSC 2008 [DIRS 185008]), Section 2.2.4.]

13.2.2.15 Redundant Stations

The controls for SNF and HLW handling operations function requires that redundant control stations shall be provided for each cell.

[PO&PR (BSC 2008 [DIRS 185008]), Section 2.6.1.]

13.2.3 Safety and Protection Requirements

13.2.3.1 NSDB Requirements

Safety requirements in this section are from the *Preclosure NSDB* (BSC 2008 [DIRS 184200]). Other requirements that address safety issues such as personnel protection from process industrial hazards or nuclear criticality safety requirements, if applicable, are contained in the special requirements section or other topical section below.

13.2.3.1.1 Cask Handling Yokes

The cask handling yokes in the CRCFs, IHF, Receipt Facility, and WHF and the pool cask handling yoke in the WHF shall be designed to protect against drop (safety function).

- The cask handling yoke [in each nuclear facility] and the pool cask handling yoke [in the WHF] are integral parts of the load-bearing path. See Cask Handling Crane requirements.

[Preclosure NSDB (BSC 2008 [DIRS 184200]) Appendix B, Table B-1, Items H.IH.HM.01 for the IHF; Appendix C, Table C-1, Items H.RF.HM.01 for the Receipt Facility; Appendix D, Table D-1, Items H.CR.HM.01 for the CRCFs; and Appendix E, Table E-1, Items H.WH.HM.01 and 02 for the WHF.]

13.2.3.1.2 Cask Handling Cranes

The cask handling cranes in the IHF, CRCFs, Receipt Facility, and WHF shall be designed to (a) protect against drop, (b) limit drop height, (c) protect against drop of a load onto a transportation cask, (d) limit speed, (e) protect against crane collapse onto a waste container, (f) maintain moderator control, and (g) protect against a cask or heavy object drop from the crane (safety function).

- The mean probability of dropping a loaded transportation cask from a less than two-block height resulting from the failure of any piece of equipment in the load bearing path supporting the cask shall be less than or equal to:

  - -- 3.0×10^{-05} per transfer for the IHF.
  - -- 4.0×10^{-05} per lift with the cask yoke or 1.0×10^{-04} per lift with sling for the WHF and CRCFs.
  - -- No specific criteria was identified for the Receipt Facility.
- The mean probability of dropping a loaded transportation cask from the two-block height resulting from the failure of any piece of equipment in the load bearing path shall be less then or equal to:
  - -- 4.0×10^{-07} per transfer for the IHF
  - -- 5.0×10^{-07} per transfer for the Receipt Facility, WHF, and CRCFs.
- The height of a two-block drop from bottom of shortest cask to the floor shall not exceed:
  - -- 40 feet for the IHF
  - -- 30 feet for the Receipt Facility, WHF, and CRCFs.
- The mean probability of dropping a load onto a loaded cask or its contents shall be less than or equal to:
  - -- 3.0×10^{-05} per cask handled for the IHF
  - -- 4.0×10^{-05} per cask handled for the Receipt Facility and CRCFs
  - -- 3.0×10^{-05} per lift for a <u>10 ton load from 10 feet</u> in the WHF.
- The speed of the cask handling crane trolley and bridge shall be limited to 20 ft/min in all facilities.
- The mean frequency of collapse of the cask handling crane due to a spectrum of seismic events shall be less than or equal to 8.0×10^{-06}/yr in all facilities.
- The mean probability of inadvertent introduction of an oil moderator into a canister shall be less than or equal to:
  - -- 9×10^{-05} over a 720-hour period following the breach of a canister for the Receipt Facility, WHF, and CRCFs.
  - -- No specific criteria was identified for the IHF.
- The mean frequency of a hoist system failure of the cask handling crane due to a spectrum of seismic event shall be less than or equal to 2.0×10^{-05}/yr in all facilities.

[Preclosure NSDB (BSC 2008 [DIRS 184200]) Appendix B, Table B-1, Items H.IH.HM.02 through 08 for the IHF; Appendix C, Table C-1, Items H.RF.HM.02 through 08 for the Receipt Facility; Appendix D, Table D-1, Items H.CR.HM.02 through 09 for the CRCFs; and Appendix E, Table E-1, Items H.WH.HM.03 through 10 for the WHF.]

13.2.3.1.3 Pool Yoke Lift Adapter

The pool yoke lift adapter in the WHF shall be designed to protect against drop of a cask (safety function).

- The pool yoke lift adapter is an integral part of the load-bearing path. See Cask Handling Crane requirements.

[Preclosure NSDB (BSC 2008 [DIRS 184200]) Appendix E, Table E-1, Item H.WH.HM.11.]

13.2.3.1.4 Cask Transfer Trolleys

The cask transfer trolleys, including pedestals and seismic restraints, in the IHF, CRCFs, Receipt Facility, and WHF shall be designed to (a) limit speed**,** (b) protect against spurious movement**,** (c) protect against sliding impact (into a wall) of a trolley holding a cask, and (d) protect against rocking (which induces an impact into a wall) of a trolley holding a cask (safety function).

- The cask transfer trolley shall be designed not to exceed a speed of 2.5 mph in the IHF, Receipt Facility, WHF and CRCFs.
- The mean probability of a spurious movement of the cask transfer trolley while a canister is being lifted shall be less than or equal to 1.0×10^{-03} per transfer in the IHF, Receipt Facility, WHF and CRCFs.
- The mean frequency of a sliding impact of a cask transfer trolley into a wall or structural column due the spectrum of seismic events shall be less than or equal to:
  - -- 3.0×10^{-05}/yr in the IHF and
  - -- 1.0×10^{-05}/yr in the Receipt Facility, WHF and CRCFs.
- The mean frequency of a rocking impact of the cask transfer trolley into a wall or structural column due to the spectrum of seismic events shall be less than or equal to:
  - -- 3.0×10^{-05}/yr in the IHF and
  - -- 1.0×10^{-05}/yr in the CRCFs, WHF and Receipt Facility.

[Preclosure NSDB (BSC 2008 [DIRS 184200]), Appendix B, Table B-1, Items H.IH.HM.09 through 12 for the IHF; Appendix C, Table C-1, Items H.RF.HM.09 through 12 for the Receipt Facility; Appendix D, Table D-1,

Items H.CR.HM.10 through 13 for the CRCFs; and Appendix E, Table E-1, Items H.WH.HM.12 through 15 for the WHF.]

13.2.3.1.5 Cask Preparation Crane

The cask preparation crane in the IHF shall be designed to protect against a drop and protect against collapse of the cask preparation crane (safety function).

- The mean probability drop of a load onto a loaded cask shall be less than or equal to 3.0×10^{-05} per transfer.
- The mean frequency of collapse of the cask preparation crane due to the spectrum of seismic events shall be less than or equal to 8.0×10^{-06} /yr.

[Preclosure NSDB (BSC 2008 [DIRS 184200]) Appendix B, Table B-1, Items H.IH.HM.13 and H.IH.HM.14.]

13.2.3.1.6 Auxiliary Pool Crane

The auxiliary pool crane in the WHF shall be designed to protect against drop of a load onto canister, protect against collapse of the auxiliary pool crane, and protect against a heavy object drop from the auxiliary pool crane. (safety function).

- The mean probability of drop of a load onto a canister shall be less than or equal to 3.0×10^{-05}.
- The mean frequency of collapse of the auxiliary pool crane due to the spectrum of seismic events shall be less than or equal to 8.0×10^{-06}/yr.
- The mean frequency of a hoist system failure of the auxiliary pool crane due to the spectrum of seismic events shall be less than or equal to 2.0×10^{-05}/yr.

[Preclosure NSDB (BSC 2008 [DIRS 184200]), Appendix E, Table E-1, Items H.WH.HMH.02 through 04.]

13.2.3.1.7 Lid Lifting Grapples

The lid lifting grapples in the WHF, truck cask lid lifting grapples in the WHF , and cask lid lifting grapples in the CRCFs and Receipt Facility shall be designed to protect against drop of a load onto a canister or DPC (safety function).

- The cask lid lifting grapples in the CRCFs and Receipt Facility are integral parts of the load-bearing path. See Cask Handling Crane requirements.
- The lid lift grapple and the truck cask lid lifting grapple are integral parts of the load-bearing path. See Preparation Station Jib Cranes requirements for the WHF.

[Preclosure NSDB (BSC 2008 [DIRS 184200]), Appendix C, Table C-1, Item H.RF.HMH.01 for the Receipt Facility; Appendix D, Table D-1, Item H.CR.HMH.01 for the CRCFs; and Appendix E, Table E-1, Item H.WH.HMH.05 for the WHF.]

13.2.3.1.8 DPC Lid Adapters

The DPC lid adapters in the CRCFs, WHF, and Receipt Facility shall be designed to protect against drop of a DPC (safety function).

- The DPC lid adapter is an integral part of the load-bearing path. See Canister Transfer Machine requirements.

[Preclosure NSDB (BSC 2008 [DIRS 184200]), Appendix C, Table C-1, Item H.RF.HTC.15, for the Receipt Facility; Appendix D, Table D-1, Item H.CR.HMH.02 for the CRCFs; and Appendix E, Table E-1, Item H.WH.HMH.06 for the WHF. DPCs are not handled in the IHF.]

13.2.3.1.9 Long Reach Grapple Adapter

The long reach grapple adapter in the WHF shall be designed to protect against drop of a load (safety function).

- The long reach grapple adapter is an integral part of the load-bearing path. See Cask Handling Crane requirements.

[Preclosure NSDB (BSC 2008 [DIRS 184200]) Appendix-E, Table E-1 Item H.WH.HMH.07.]

13.2.3.1.10 Spent Fuel Transfer Machine

The spent fuel transfer machine in the WHF shall be designed to protect against a drop of an SNF assembly, protect against lifting an SNF assembly above the safe limit for workers, protect against collapse of the spent fuel transfer

machine onto a waste container or an SNF assembly, and to protect against an SNF assembly or heavy object drop from the SFTM onto an SNF assembly (safety function).

- The mean probability of dropping an SNF assembly due to a failure of any piece of equipment within the load path supporting the SNF assembly shall be less than or equal to 5.0×10^{-06} per assembly lift.
- The mean probability of lifting an SNF assembly within 10 feet of the surface of the pool water shall be less than or equal to 7.0×10^{-07} per assembly movement.
- The mean frequency of collapse of the spent fuel transfer machine due to the spectrum of seismic events shall be less than or equal to 2.0×10^{-05} /yr.
- The mean frequency of a hoist system failure of the spent fuel transfer machine due to the spectrum of seismic events shall be less than or equal to 2.0×10^{-05} /yr.

[Preclosure NSDB (BSC 2008 [DIRS 184200]), Appendix E, Table E-1, Items H.WH.HTF.01 through 04.]

13.2.3.1.11 BWR and PWR Lifting Grapples

The BWR and PWR lifting grapples in the WHF shall be designed to protect against drop of an assembly (safety function).

- The PWR and BWR lifting grapples are an integral part of the load-bearing path. See Canister Transfer Machine requirements.

[Preclosure NSDB (BSC 2008 [DIRS 184200]), Appendix E, Table E-1, Item H.WH.HTF.05.]

13.2.3.1.12 SNF Staging Rack

The SNF staging rack in the WHF shall be designed to protect against tipover of SNF (safety function).

- The mean frequency of collapse the SNF staging racks (sufficient to cause loss of confinement of the fuel assemblies within the staging rack fuel compartments) due to the spectrum of seismic events shall be less than or equal to 2×10^{-06}/yr.

[Preclosure NSDB (BSC 2008 [DIRS 184200]), Appendix E, Table E-1, Item H.WH.HTF.06.]

13.2.3.1.13 Canister Transfer Machines

The canister transfer machines shall be designed to (a) protect against drop, (b) limit drop height, (c) protect against a drop of a load onto a canister, (d) protect against a spurious movement, (e) limit speed, (f) preclude non-flat bottom drop of a DPC, TAD, or naval SNF canister, (g) protect against direct exposure to personnel, (h) maintain moderator control, (i) protect against canister breach, (k) maintain DOE SNF canister separation in the CRCFs, (l) protect against collapse of the CTM, and (m) protect against a canister or heavy object drop from the CTM (safety functions).

- The mean probability of dropping a canister from below the two-block height due to the failure of any piece of equipment within the load-bearing shall be less than or equal to 1.0×10^{-05} per transfer for each CTM.
- The mean probability of a drop of a canister from the two-block height due to the failure of any piece of equipment in the load-bearing path shall be less than or equal to:
  - -- 3.0×10^{-08} per lift for the CTM for the CRCFs and WHF, and
  - -- 3.0×10^{-07} per lift for the IHF.
- The height of a two-block drop shall not exceed 45 feet from the bottom of any canister to the floor of the transportation cask or aging overpack or waste package cavity, including pallets.
- The mean probability of dropping a load onto a canister shall be less than or equal to:
  - -- 1.0×10^{-05} per transfer by CTM in the Receipt Facility, CRCFs, and WHF, and
  - -- 1.0×10^{-03} per transfer by the CTM for the IHF.
- The mean probability of spurious movement of the CTM while the canister is being lifted or lowered shall be less than or equal to:
  - -- 4.0×10^{-09} per lift for each CTM in the CRCFs, RF, and WHF and
  - -- 1.0×10^{-03} per lift in the IHF.
- The CTM slide gate shall be incapable of breaching a canister.
- The CTM shall preclude non-flat bottom drop of naval SNF canisters, DPCs, or TADs
- The mean probability of inadvertent radiation streaming due to the inadvertent opening of the CTM slide gate, the inadvertent raising of the CTM shield skirt, or an inadvertent motion of the CTM away from a

port shall be less than or equal to 1.1×10^{-05} per transfer.

- The speed of the CTM trolley and bridge shall be limited to 20 fpm.
- The mean frequency of collapse of the CTM due to the spectrum of a seismic events shall be less than or equal to 1.0×10^{-05}/yr.
- The mean frequency of a hoist system failure of the CTM due to spectrum of seismic events shall be less than or equal to 2.0×10^{-05}/yr.
- The mean probability of inadvertent introduction of an oil moderator into a canister in the Receipt Facility, the WHF, and the CRCFs shall be less than or equal to 9.0×10^{-05} over a 720-hour period following breach of a canister.
- The mean conditional probability of failure of the applicable prevention feature given an attempt to load a DOE SNF canister anywhere other than the center of a receptacle shall be less than or equal to 3.0×10^{-06} in the CRCFs.
- The mean probability of collision between the two CTMs during canister transfer shall be less than or equal to 3.0×10^{-06}.

[Preclosure NSDB (BSC 2008 [DIRS 184200]), Appendix B, Table B-1, Items H.IH.HTC.01 through 11 for the IHF; Appendix C, Table C-1, Items H.RF.HTC.02 through 13 for the Receipt Facility; Appendix D, Table D-1, Items H.CR.HTC.01 through 14 for the CRCFs; and Appendix E, Table E-1, Items H.WH.HTC.01 through 12 for the WHF.]

13.2.3.1.14 Canister/Canister Transfer Machine Grapples

The canister grapples in the IHF and CRCFs and CTM grapples in the IHF, CRCFs, Receipt Facility and WHF shall be designed to protect against canister drop (safety function).

- The canister and CTM grapple is an integral part of the load-bearing path. See Canister Transfer Machine requirements.

[Preclosure NSDB (BSC 2008 [DIRS 184200]) Appendix B, Table B-1, Items H.IH.HTC.12 and 13 for the IHF; Appendix C, Table C-1, Items H.RF.HTC.14 for the RF; Appendix D, Table D-1, Item H.CR.HTC.15 for the CRCFs; and Appendix E, Table E-1, Items H.WH.HTC.13 for WHF.]

13.2.3.1.15 Naval Canister Lifting Adapter

The naval canister lifting adapter in the IHF shall be designed to protect against drop of a canister (safety function).

- The naval canister lifting adapter is an integral part of the load-bearing path of the CTM. See Canister Transfer Machine requirements.

[Preclosure NSDB (BSC 2008 [DIRS 184200]), Appendix B, Table B-1, Item H.IH.HTC.14.]

13.2.3.1.16 DOE/Naval Waste Package Inner Lid Grapples

The DOE waste package inner lid grapple and the naval waste package inner lid grapple in the IHF shall be designed protect against drop of a canister and to protect against the drop of a load onto a canister (safety function).

- The lid grapple is an integral part of the load-bearing path of the CTM. See Canister Transfer Machine requirements.

[Preclosure NSDB (BSC 2008 [DIRS 184200]), Appendix B, Table B-1, Items H.IH.HTC.15 and 16.]

13.2.3.1.17 TAD Canister Staging Racks

The TAD canister staging racks (and fire barrier) in the CRCFs shall be designed to protect against tipover/impact of a canister (safety function).

- The mean frequency of collapse of the TAD canister staging racks due to the spectrum of seismic events shall be less than or equal to 2.0×10^{-06}/yr.

[Preclosure NSDB (BSC 2008 [DIRS 184200]) Appendix D, Table D-1, Item H.CR.HTC.16.]

13.2.3.1.18 DOE Canister Staging Racks

The DOE canister staging racks (and fire barrier) in the CRCFs shall be designed to protect against tipover/impact of a canister (safety function).

- The mean frequency of collapse of DOE canister staging racks (such that the spacing between the surface of adjacent DOE SNF canisters in a staging rack is less than 30 cm) due to the spectrum of seismic events

shall be less than or equal to 2.0×10^{-06}.

[Preclosure NSDB (BSC 2008 [DIRS 184200]) Appendix D, Table D-1, Item H.CR.HTC.17.]

13.2.3.1.19 Vertical Shielded Transfer Cask

The vertical shielded transfer cask shall be designed to protect against expulsion of SNF assemblies and protect against direct exposure to personnel (safety function).

- The mean probability of the SNF expulsion from the STC after a drop or tipover shall be less than or equal to 1×10^{-05} per drop or tipover incident.
- The mean conditional probability of loss of STC shielding resulting from a drop, impact, or collision shall be less than or equal to 1×10^{-05} per drop or impact.

[Preclosure NSDB (BSC 2008 [DIRS 184200]), Appendix E, Table E-1, Items H.WH.HT.01 and 02.]

13.2.3.1.20 TAD Closure Jib Crane

The TAD closure jib crane in the WHF shall be designed to protect against drop of a load, protect against collapse of the TAD closure jib crane, and protect against a heavy object drop from the TAD closure jib crane (safety function).

- The mean probability of a drop of a load on to a waste container shall be less than or equal to 3.0×10^{-05} per lift.
- The mean frequency of collapse of the TAD closure jib crane due to the spectrum of seismic events of shall be less than or equal to 8.0×10^{-06}/yr.
- The mean frequency of a hoist system failure of the TAD closure jib crane due to the spectrum of seismic events shall be less than or equal to 2.0×10^{-05}/yr.

[Preclosure NSDB (BSC 2008 [DIRS 184200]) Appendix E, Table E-1, Items H.WH.HC.01 through 03.]

13.2.3.1.21 Waste Package Transfer Trolleys

The waste package transfer trolleys (including Pedestals, Seismic Rail Restraints, and Rail System) in the IHF and CRCFs shall (a) preclude uncontrolled tilt-down, (b) limit speed, (c) protect against spurious movement, (d) protect against a tipover of a waste package on a waste package transfer trolley, and (e) protect against rocking (which induces an impact into a wall) with a waste package transfer trolley holding a waste package (safety function).

- The waste package transfer trolley shall be designed to be incapable of an uncontrolled tilt-down.
- The speed of the WPTT shall be limited to 2.5 mi/hr.
- The mean probability of spurious movement of the WPTT while the canister is being lowered shall be less than or equal to 4×10^{-9} per transfer.
- The mean frequency of tipover of the waste package transfer trolley system due to the spectrum of seismic events shall be less than or equal to 2.0×10^{-06}/yr.
- The mean frequency of rocking impact of the waste package transfer trolley into a wall due to the spectrum of seismic events shall be less than or equal to 2.0×10^{-05}/yr.

[Preclosure NSDB (BSC 2008 [DIRS 184200]) Appendix B, Table B-1, Items H.IH.HL.02 through 06 for the IHF and Appendix D, Table D-1, Items H.CR.HL.02 through 06 for the CRCFs.]

13.2.3.1.22 DPC Cutting Jib Crane

The DPC cutting jib crane shall be designed to protect against drop of a load, protect against collapse of the DPC cutting jib crane, and protect against a heavy object drop from the DPC cutting jib crane (safety function).

- The mean probability drop of a load onto a waste container shall be less than or equal to 3.0×10^{-05} per lift.
- The mean frequency of collapse of the DPC cutting jib crane due to the full spectrum seismic events shall be less than or equal to 8.0×10^{-06}/yr.
- The mean frequency of a hoist system failure of the DPC cutting jib crane due to the spectrum of seismic events shall be less than or equal to 2.0×10^{-5}/yr.

[Preclosure NSDB (BSC 2008 [DIRS 184200]) Appendix E, Table E-1, Items H.WH.HD.01 through H.WH.HD.03.]

13.2.3.1.23 Preparation Station Jib Cranes

The preparation station jib cranes (1 and 2) in the WHF shall be designed to protect against a drop of a load onto canister, protect against collapse of the jib crane, and protect against a heavy object drop from the jib crane (safety function).

- The mean probability drop of a load onto a canister shall be less than or equal to 3.0×10^{-05} per lift.
- The mean frequency of collapse of the jib crane due to the spectrum of seismic events shall be less than or equal to 8.0×10^{-06}/yr.
- The mean frequency of a hoist system failure of the jib crane due to the spectrum of seismic events shall be less than or equal to 2.0×10^{-05}/yr.

[Preclosure NSDB (BSC 2008 [DIRS 184200]), Appendix E, Table E-1, Items H.WH.HMH.01 through 03.]

13.2.3.1.24 W74 Upper Basket Lifting Device

The W74 upper basket lifting device in the WHF shall be designed to protect against drop of a heavy load onto SNF assemblies (safety function).

- The mean probability of auxiliary pool crane dropping a heavy load onto fuel assembly due to the failure of any piece of equipment within the load path supporting the auxiliary pool crane shall be less than or equal to 3.0×10^{-06} per lift.

[Preclosure NSDB (BSC 2008 [DIRS 184200]), Appendix E, Table E-1, Items H.WH.HTF.01.]

13.2.3.1.25 Waste Package [Transfer Trolley] Shield Rings

The waste package [transfer trolley] shield rings shall be designed to provide lateral and vertical stability to the waste package in the waste package transfer trolley (safety function).

- The mean frequency of the shield rings becoming displaced from the waste package transfer trolley due to the spectrum of seismic events shall be less than or equal to 2.0×10^{-05} /yr.

[Preclosure NSDB (BSC 2008 [DIRS 184200]), Appendix B, Table B-1, Item H.IH.HL.01 for the IHF and Appendix D, Table D-1, Item H.CR.HL.01 for the CRCFs. Although the waste packages have shield rings, these shield rings are those on the transfer trolley.]

13.2.3.1.26 Entrance Vestibule Crane

The entrance vestibule crane shall be designed to protect against collapse (safety function).

- The mean frequency of collapse of the entrance vestibule crane due to the spectrum of seismic events shall be less than or equal to 8.0×10^{-06}/yr.

[Preclosure NSDB (BSC 2008 [DIRS 184200]), Appendix E, Table E-1, Item H.WH.HMC.01.]

13.2.3.1.27 Transportation Cask

Although not provided by the repository, transportation casks provide containment of radionuclides and protect against direct exposure to personnel (safety function).

- The mean conditional probability of a breach of a representative canister in a sealed transportation cask resulting from:
  - -- a drop shall be less than or equal to 1×10^{-05} per drop,
  - -- a drop of a load onto the cask shall be less than or equal to 1×10^{-05} per drop, and
  - -- a side impact or collision shall be less than or equal to 1×10^{-08} per impact.
- The mean conditional probability of loss of cask gamma shielding resulting from a drop, impact, or collision to a transportation cask shall be less than or equal to 1×10^{-05} per drop or impact.
- The geometry of the transportation casks that carry HLW canisters shall preclude lid contact with canisters following a drop of a cask lid.

[Preclosure NSDB (BSC 2008 [DIRS 184200]), Appendix B, Table B-1, Items H.IH.01 through 05 for the IHF; Appendix C, Table C-1, Items H.RF.01 through 04 for the Receipt Facility; Appendix D, Table D-1, Items H.CR.01 through 05: Appendix E, Table E-1, Items H.WH.01 through 04; and Appendix F, Table F-1, Items H.SB.01 through 04.]

13.2.3.1.28 Site Prime Mover

The site prime mover (or equivalent), in conjunction with a transportation cask, shall be designed to reduce severity of a collision, preclude fuel tank explosion, and limit fire severity (safety function).

- The speed of the site prime mover shall be limited to 9 mi/hr.
- The fuel tank of a site prime mover that enters the facility shall preclude fuel tank explosions
- The diesel fuel capacity for a site prime mover that enters the facility shall be limited to a total of 100 gallons.

[Preclosure NSDB (BSC 2008 [DIRS 184200]), Appendix B, Table B-1, Items H.IH.06 through H.IH.08 for the IHF, Appendix C, Table C-1, Items H.RF.05 through H.RF-07 for the Receipt Facility, Appendix D, Table D-1, items H.CR.06 through H.CR.08 for the CRCFs, Appendix E, Table E-1, Items H.WH.05 through H.WH.07 for the WHF, and Appendix F, Table F-1, Items H.SB.05 through 07.]

13.2.3.1.29 Waste Package Handling Crane

The cask handling/waste package preparation system shall be designed to protect against collapse of the WP handling crane (safety function).

- The mean frequency of collapse of the WP handling crane due to the spectrum of seismic events shall be less than or equal to 8×10^{-06}/yr .

[Preclosure NSDB (BSC 2008 [DIRS 184200]), Appendix B, Table B-1, Item H.IH.HMP.01 for the IHF and Appendix D, Table D-1, Item H.CR.HMP.01 for the CRCFs.]

13.2.3.1.30 Waste Package Closure Remote Handling System Bridge

The Waste Package Closure system shall be designed to protect against collapse of the remote handling bridge (safety function).

- The mean frequency of collapse of the remote handling system bridge due to the spectrum of seismic events shall be less than or equal to 8.0×10^{-06}/yr.

[Preclosure NSDB (BSC 2008 [DIRS 184200]), Appendix B, Table B-1, Item H.IH.HWH.01 for the IHF and Appendix D, Table D-1, Item H.CR.HWH.01 for the CRCFs.]

13.2.3.1.31 Canister Transfer Machine Maintenance Crane (Receipt Facility)

The canister transfer machine maintenance crane shall be designed to protect against collapse (safety function).

- The mean frequency of collapse of the canister transfer machine maintenance crane due to the spectrum of seismic events shall be less than or equal to 8.0×10^{-06}/yr.

[Preclosure NSDB (BSC 2008 [DIRS 184200]), Appendix C, Table C-1, Item H.RF.HTC.01.]

13.2.3.1.32 Lid Bolting Room Crane (Receipt Facility)

The lid bolting room crane in the Receipt Facility shall be designed to protect against the collapse (safety function).

- The mean frequency of collapse of the lid bolting room crane due to the spectrum of seismic events shall be less than or equal to 8.0×10^{-06} /yr.

[Preclosure NSDB (BSC 2008 [DIRS 184200]), Appendix C, Table C-1, Item H.RF.HMC.01.]

13.2.3.1.33 Handling of Waste Forms and Waste Packages

Mechanical handling shall limit the damage to waste forms. Waste package handling and emplacement activities shall be monitored through equipment with resolution capable of detecting waste package damage. The waste package shall be handled in a controlled manner during fabrication, handling, transport, storage, emplacement, installation, operation, and closure activities to minimize damage; surface contamination; and exposure to adverse substances.

[Postclosure Modeling and Analyses Design Parameters (BSC 2008 [DIRS 183627]), Table 1, items # 03-21, # 03-22, # 04-08, and # 05-01. An operator and an independent checker shall perform the operations and verify proper waste package emplacement. Records demonstrating compliance shall be maintained.]

13.2.3.1.34 SNF Processing

SNF shall be processed in such a manner as to preclude criticality, including the use, if needed, of disposable control rod assemblies or the derating of TAD canisters.

[PO&PR (BSC 2008 [DIRS 185008]), Section 2.2.2. This criterion also partially satisfies PO&PR Section 2.6.2.]

13.2.3.1.35 Waste Package Surface Defects

All waste packages shall be certified as suitable for emplacement by process control and/or inspection to ensure surface marring is acceptable per derived internal constraint. The surface marring constraints are: The damage to the waste package corrosion barrier that displaces material (i.e. scratches) shall be limited to 1/16 in (1.6 mm) in depth. Modifications to the waste package corrosion barrier that deform the surface, but do not remove material (i.e. dents), shall not leave residual tensile stresses greater than 257 MPa.

[Postclosure Modeling and Analyses Design Parameters (BSC 2008 [DIRS 183627]), Table 1, item # 03-18. Internal constraints are defined in the Postclosure Modeling document.]

13.2.3.1.36 DOE SNF Canisters

Although these canisters are not provided by the repository, in conjunction with the mechanical handling system, the standardized DOE SNF canister shall provide containment (safety function).

- The mean conditional probability of breach of a standardized DOE SNF canister resulting from:
  - -- a drop of the canister shall be less than or equal to 1.0×10^{-05} per drop.
  - -- a side impact or collision shall be less than or equal to 1.0×10^{-08} per impact.
- The mean conditional probability of breach of a DOE SNF resulting from the spectrum of fires while:
  - -- contained within a waste package shall be less than or equal to 3.0×10^{-04} per fire event.
  - -- contained within a transportation cask or staging area shall be less than or equal to 2.0×10^{-06} per fire event.
  - -- located within the CTM Shield Bell shall be less than or equal to 1.0×10^{-04} per fire event.

[Preclosure NSDB (BSC 2008 [DIRS 184200]), Appendix D, Table D-1, Items DS.CR.04 through 08. This criterion also partially satisfies PO&PR (BSC 2008 [DIRS 185008]), Section 2.6.2. Although this criterion previously addressed the MCO, it has since been removed from the NSDB. HLW canisters were split out separately.]

13.2.3.1.37 Dual-Purpose Canister

Although DPCs are not provided by the repository, in conjunction with the mechanical handling system, the dual-purpose canister (analyzed as a representative canister) shall be designed to provide containment (safety functions).

- The mean conditional probability of breach of a representative canister resulting from a:
  - -- drop of the canister shall be less than or equal to 1.0×10^{-05} per drop.
  - -- drop of a load onto the canister shall be less than or equal to 1.0×10^{-05} per drop.
  - -- slide impact or collision shall be less than or equal to 1.0×10^{-08} per impact.
- The mean conditional probability of breach of a representative canister resulting from the spectrum of fires while:
  - -- contained within a transportation cask shall be less than or equal to 2.0×10^{-06} per fire event,
  - -- located within the CTM shield bell shall be less than or equal to 1.0×10^{-04} per fire event, and
  - -- contained within an aging overpack shall be less than or equal to 1.0×10^{-06} per fire event.
- The mean conditional probability of breach of a representative canister resulting from a drop of a load onto a HAM shall be less than or equal to 1×10^{-05} per drop

[Preclosure NSDB (BSC 2008 [DIRS 184200]), Appendix C, Table C-1, Items DS.RF.01 through 06 for the Receipt Facility; Appendix D, Table D-1, Items DS.CR.14 through 19 for the CRCFs; Appendix E, Table E-1, Items DH.WH.01 through 06 for the WHF, and Appendix F, Table F-1, items DS.SB.01 through 07. Note that some of the values for probability of breach due to fires in Table F-1 are inconsistent with corresponding values in other tables listed here.]

13.2.3.1.38 TAD Canister

The TAD canister (analyzed as a representative canister) shall be designed to provide for containment (safety functions).

- The mean conditional probability of breach of a representative canister resulting from a:

  - drop of the canister shall be less than or equal to 1.0×10^{-05} per drop,
  - drop of a load onto the canister shall be less than or equal to 1.0×10^{-05} per drop, and
  - low-speed impact or collision shall be less than or equal to 1.0×10^{-08} per impact.
- The mean conditional probability of breach of a representative canister resulting from a fire while:
  - contained within a waste package resulting from a fire shall be less than or equal to 2.0×10^{-06} per fire event,
  - contained within a transportation cask [or STC] shall be less than or equal to 1.0×10^{-06} per fire event,
  - located within the CTM shield bell shall be less than or equal to 1.0×10^{-04} per fire event, and
- contained within an AO shall be less than or equal to 1.0×10^{-04} per fire event.

[Preclosure NSDB (BSC 2008 [DIRS 184200]), Appendix C, Table C-1, Items DS.RF.07 through 12 for Receipt Facility; Appendix D, Table D-1, Items DS.CR.20 through 26 for the CRCFs; Appendix E, Table E-1, Items DS.WH.07 through 12 for the WHF; and Appendix F, Table F-1, items DS.SB.01 through 07. Note that some of the values for probability of breach due to fires in Table F-1 are inconsistent with corresponding values in other tables listed here.]

13.2.3.1.39 HLW Canisters

Although the HLW canisters are not provided by the repository, in conjunction with the mechanical handling system, the defense HLW canisters shall be designed to provide containment (safety function).

- The mean conditional probability of breach of an HLW canister resulting from:
  - a drop of the canister shall be less than or equal to:
    - 3.0×10^{-02} per drop in the IHF and
    - 7.0×10^{-02} in the CRCFs,
  - a side impact or collision shall be less than or equal to 1.0×10^{-08} per drop,
  - a drop of another HLW canister onto the first canister shall be less than or equal to 3.0×10^{-02} per drop.
- The mean conditional probability of breach of a HLW resulting from the spectrum of fires while:
  - in a waste package shall be less than or equal to 3.0×10^{-04} per fire event,
  - in a transportation cask shall be less than or equal to 2.0×10^{-06} per fire event,
  - located within the CTM shield bell shall be less than or equal to 1.0×10^{-04} per fire event, and

[Preclosure NSDB (BSC 2008 [DIRS 184200]), Appendix B, Table B-1, Items DS.IH.04 through 09 for the IHF; and Appendix D, Table D-1, Items DS.CR.09 through 13 for the CRCFs.]

13.2.3.1.40 Naval Spent Fuel Canisters

Although the naval SNF canisters are not provided by the repository, in conjunction with the mechanical handling system, the naval SNF canisters provide containment (safety function).

- The mean probability of a drop and breach of the naval SNF canisters in the IHF shall be less than or equal to 2.0×10^{-05} over the preclosure period.
- The mean conditional probability of breach of a naval SNF canister in the IHF resulting from a:
  - drop of a load onto the canister shall be less than or equal to 1×10^{-05}per drop.
  - side impact or collision shall be less than or equal to 1×10^{-08} per impact.
- The mean probability of a breach of a naval SNF canister in the IHF resulting from a fire while:
  - contained within a waste package shall be less than or equal to 1.0×10^{-04} per fire event,
  - contained within a transportation cask shall be less than or equal to 1×10^{-06} per fire event, and
  - located within the CTM shield bell shall be less than or equal to 9×10^{-05} per fire event.

[Preclosure NSDB (BSC 2008 [DIRS 184200], Appendix B, Table B-1, Items DN.IH.04 through 09. The naval SNF canisters, as handled only in the IHF, were analyzed as representative canisters in preclosure analyses.]

13.2.3.1.41 Naval Cask Lift Bail and Lift Plate

The cask handling/cask receipt system in the IHF shall be designed to protect the naval cask lift bail and lift plate against drop (safety function).

- The naval cask lift bail and lift plate are integral parts of the load-bearing path. See Cask Handling Crane requirements.

[Preclosure NSDB (BSC 2008 [DIRS 184200], Appendix B, Table B-1, Items H.IH.HMC.01 and 02.]

13.2.3.1.42 Horizontal Lifting Beam (Receipt Facility)

The cask handling/cask receipt system shall be designed to protect the horizontal lifting beam against drop (safety function).

- The horizontal lifting beam is integral to the load-bearing path. See Cask Handling Crane requirements.

[Preclosure NSDB (BSC 2008 [DIRS 184200], Appendix C, Table C-1, item H.RF.HMC.02 for the Receipt Facility.]

13.2.3.1.43 Truck and Rail Cask Lid Adapters

The cask handling/cask preparation system shall be designed to protect the truck and rail cask lid adapters against drop (safety function).

- The truck and rail cask lid adapter is integral to the load-bearing path. See Cask Handling Crane requirements.

[Preclosure NSDB (BSC 2008 [DIRS 184200], Appendix B, Table B-1, Item H.IH.HMH.01 for the IHF; Appendix C, Table C-1, item H.RF.HMH.02 for the Receipt Facility; Appendix d, Table D-1, item H.CR.HMH.03; and Appendix E, Table E-1, Item H.WH.HMH.01 for the WHF.]

13.2.3.1.44 Cask Support Frames

The cask support frames at WHF Preparation Station #2, TAD Closure Station, DPC Cutting Station, shall be designed to protect against tipover of a cask (safety function).

- The mean frequency of failure of the cask support frame and anchorages due to the spectrum of seismic events shall be less than or equal to 6.0×10^{-05}/yr.
- The mean frequency of a cask drop due to a failure of the truck cask handling frame due to the spectrum of seismic events shall be less than or equal to 2.0×10^{-05}/yr.

[Preclosure NSDB (BSC 2008 [DIRS 184200], Appendix C, Table C-1, Item H.RF.HMC.02; and Appendix E, Table E-1, Items H.WH.HFT.07, H.WH.HMH.04, H.WH.HC.04, and H.WH.HD.04 for the WHF.]

13.2.3.1.45 Deleted

13.2.3.2 Hazards Analysis

13.2.3.2.1 Preliminary Hazards Analysis

Transportation casks shall be protected from hazards identified in the preliminary hazards analysis and other documentation. The SSC equipment specifications provide requirements that ensure protection.

[Derived engineering requirement based on preliminary hazards analysis, other documentation, and SSC equipment specifications that will be determined later.]

13.2.3.2.2 Industrial Safety

The mechanical handling system shall include environmental, safety, and health requirements related to industrial safety. Included are considerations for protection from heavy moving equipment and hazardous materials. When detailed operational steps are developed, the industrial hazards will be identified, and applicable design criteria and codes and standards will be applied. For the mechanical handling system, the following industrial hazards shall be prevented or mitigated:

- Electrical
  - Arcing
  - Burns
  - Fire
  - Shock
  - Shorting (faulting)
  - Static electricity.
- Environmental impacts
  - Regulated materials/hazardous substances
  - Waste management production of mixed waste
  - Storm Water Flood control

  - Sewer System
  - Endangered / Threatened species.
- Mechanical
  - Fire
  - Hydraulic pressure
  - Impacts/blunt force
  - Implosion from vacuum
  - Pneumatic pressure
  - Rotating equipment
  - Vibration
  - Struck by
  - Crushed.
- Personnel
  - Confined space
  - Falls
  - Lifting
  - Pinch points
  - Sharp edges/points
  - Slips/trips
  - Dust Silica
  - chemicals/physical agents
  - radon
  - Noise
  - Lasers.
- Testing/operations/construction/maintenance
  - Welding / Cutting
  - Elevated work
  - Falling objects
  - Fire
  - Hoisting and rigging
  - Mobile/heavy equipment
  - Access / egress
  - Pressure vessels and pressure systems
  - Process Gases
  - Cryogenics.

[Although not a specific requirement, these are necessary based on an analysis of 10 CFR 851.22(a)(1) [DIRS 182868], to "establish and implement a hazard prevention and abatement process to ensure that all identified and potential hazards are prevented ."]

13.2.4 Miscellaneous Requirements

13.2.4.1 Decontamination

The mechanical handling system shall support decontamination for transportation casks, aging overpacks, STCs, and waste packages. In the event that transportation casks and waste packages are found to have surface contamination, decontamination shall be performed by the limited capability afforded in the facility.

[Although this function was specifically applied to the Fuel Handling Facility via BCP YMP-2004-072 [DIRS 168721], Attachment A 18, the Fuel Handling Facility does not exist in the current repository design concept. However, this function is necessary in the current suite of nuclear handling facilities.]

13.2.4.2 Transportation Cask Return to Service

The mechanical handling system shall ensure that, after removal of their radioactive material, transportation casks meet the following criteria before being returned to the CRWMS transportation element:

- Conform to a Certificate of Compliance,
- Fissile material and fissile material packaging exemption requirements in 10 CFR 71.15(a)-(f) [DIRS 181967] and the requirements of 10 CFR 71, *Packaging and Transportation of Radioactive Material*,
- 49 CFR 172, *Hazardous Materials Table, Special Provisions, Hazardous Materials Communications, Emergency Response Information, and Training Requirements* [DIRS 184241] (including, for bare-fuel

casks, characterization to determine the constituents, total radioactivity, and chemical form in accordance with 49 CFR 172.203),

- 49 CFR 173, Shippers--General Requirements for Shipments and Packagings [DIRS 184242], for class 7 (radioactive) materials 173.401-173.477,
- Levels of non-fixed radioactive contamination on external surfaces (accessible external surfaces of the cask, impact limiters, personnel barrier, tie-down, transport frame, and transport vehicle) shall be ALARA per 10 CFR 71.87 (i),
- Accumulations of 15 grams or more of fissile material shall be removed from the transportation casks,
- The interior of unloaded transportation casks shall be visually inspected prior to closure shall be free of debris and other foreign materials to the extent practical, comply with the appropriate transportation requirements, and
- Until modified by calculations or analyses, the combined gamma and neutron dose rate contribution from SNF measured at the basket top end plane over an open, unloaded transportation cask shall be no more than 35 mrem/hr without further evaluation of the fissile content limit of 49 CFR 173.453.

[MGR-RD [DIRS 177491], Section 3.1.2.A, IICD Volume 1 (DOE 2007 [DIRS 178792]) Sections 9.2.1 and 9.2.2. The bullets are provided from the PO&PR (BSC 2008 [DIRS 185008]), Sections 2.1.8, 2.1.9, and 2.1.10. Casks exiting the repository must be shown to meet the requirements of the DOT and instructions provided by the NNPP for the return of naval transportation casks, even when empty. Casks must undergo external surveys prior to the assembly of the package, which includes the impact limiters and personnel barrier. However, survey and decontamination of cask interiors is not part of the mechanical handling system. Requirements pertaining to cask internals are satisfied by the processing facility systems and not by the cask receipt and return system. Performance acceptance criteria that reference 49 CFR 173 are for external compliance. If decontamination is required, the equipment and methods shall have prior approval of the NNPP. IICD Volume 2 (DOE 2007 [DIRS 176810]), Section 3.1.15. Even though there is a requirement that MGR will ensure that there is no more fissile material than is allowable under the requirements of 49 CFR 173.453(a) and there is less than 100 grams of spent fuel material and no extraneous material (other than fuel assembly crud) remaining in the cask interior, removing 15 grams or more of fissile material is the more conservative criterion.]

13.2.4.2.1 Naval Cask Contamination

The mechanical handling system shall return naval transportation casks to the naval transportation system meeting naval surface contamination limits. The exterior and interior of the naval cask must not have removable contamination in excess of:

1. 1000 dpm/100 cm^2 for non-fixed beta- and gamma-emitting radionuclide contamination
2. 110 dpm/100 cm^2 for alpha-emitting radionuclides.

[IICD Volume 1 (DOE 2007 [DIRS 178792], Section 9.2.1.]

13.2.4.2.2 DOE Cask Contamination

The mechanical handling system shall return DOE transportation casks to the DOE transportation system meeting DOE surface contamination limits. The exterior and interior of the DOE cask must not have removable contamination in excess of:

1. 22,000 dpm/100 cm^2 for non-fixed beta- and gamma-emitting radionuclide contamination
2. 2200 dpm/100 cm^2 for alpha-emitting radionuclides.

[IICD Volume 1 (DOE 2007 [DIRS 178792], Section 9.2.1.]

13.2.4.3 Facility to Aging Movement

Until modified by calculations or analysis, the capability shall be provided for movement of TAD canisters or DPCs in AOs from a facility to aging in an 8-hour period from the beginning of the transport.

[PO&PR (BSC 2008 [DIRS 185008]), Section 2.2.37.]

13.2.4.4 Cask Preparation

WPs shall be prepared for canistered SNF and HLW transfer operations. Transportation casks shall be transported to the cask preparation area. The cask preparation area shall be capable of processing various types and numbers of casks.

[PO&PR (BSC 2008 [DIRS 185008]), Section 2.2.5 and 2.2.6.]

13.2.4.5 Waste Form Loading Controls

To minimize waste form damage, waste package and TAD canister loading activities shall be performed and monitored in accordance with industry standard practices. Controls shall be established to ensure that the loading of waste forms in waste packages are performed under a quality control program.

[Postclosure Modeling and Analyses Design Parameters (BSC 2008 [DIRS 183627]), Table 1, item # 04-01. An operator and an independent checker shall monitor waste package and TAD canister loading activities. Records demonstrating compliance shall be maintained.]

13.2.4.6 Tools and Equipment

Appropriate tools and equipment shall be obtained or developed to receive SNF and HLW transportation casks. Space, instruments, and equipment shall be provided, as necessary, to perform inspections and other required receipt operations.

[PO&PR (BSC 2008 [DIRS 185008]), Section 2.1.4.]

13.2.4.7 Waste Package Handling Contact

After fabrication final cleaning, the waste package shall be prepared for shipment. Materials or objects contacting the waste package outer surfaces during transportation, loading, and emplacement will be evaluated to ensure that any physical degradation and contamination are within allowable limits. The outer corrosion barrier shall be repaired, and criteria for acceptable marring shall be followed, in accordance with written procedures that have been accepted by the design organization prior to their usage.

[Postclosure Modeling and Analyses Design Parameters (BSC 2008 [DIRS 183627]), Table 1, item # 03-20. Surface defects include, but are not limited to, scratches, nicks, dents, and permanent changes to the surface stress condition. Prior to emplacement, a waste package inspection will be necessary to ensure that the waste package surface state is of a condition consistent with the modeling of waste package degradation.]

13.3 Conformance Verification

Table 13-2. Mechanical Handling Conformance Verification

Criterion		Preliminary Verification Method					
Number	**Description**	**N/A**	**Analysis**	**Exam**	**Demo**	**Review**	**Test**
13.2.1.1	Annual Receipt Rates					X	
13.2.1.2.1	Canister Systems					X	
13.2.1.2.2	Deleted	--	--	--	--	--	--
13.2.1.2.3	Railroad Shipments					X	
13.2.1.2.4	Deleted	--	--	--	--	--	--
13.2.1.2.5	Cask Sizes					X	
13.2.1.2.6	Envelope Interfaces					X	
13.2.1.2.7	Transportation Cask Types					X	
13.2.1.2.8	Deleted	--	--	--	--	--	--
13.2.1.2.9	Fuel Handling					X	
13.2.1.2.10	Contamination Prevention					X	
13.2.1.2.11	DOE Generated SNF Disposable Canisters					X	
13.2.1.2.12	DOE SNF of Commercial Origin					X	
13.2.1.2.13	Handling DOE SNF Standardized Canisters					X	
13.2.1.2.14	Deleted	--	--	--	--	--	--
13.2.1.2.15	Deleted	--	--	--	--	--	--
13.2.1.2.16	Deleted	--	--	--	--	--	--
13.2.1.2.17	Max Lift Height of Multi-Element Canisters					X	
13.2.1.2.18	HLW Canister Drop Capability					X	
13.2.1.2.19	Naval SNF					X	
13.2.1.2.20	Vitrified HLW					X	
13.2.1.2.21	Deleted	--	--	--	--	--	--
13.2.1.2.22	DOE SNF Debris of Commercial Origin					X	
13.2.1.2.23	Non-Fuel Components					X	
13.2.1.2.24	Canister Lifting Fixture					X	
13.2.1.2.25	Read Canister Labels					X	
13.2.1.2.26	Thermal Output					X	
13.2.1.2.27	Lifting HLW Canisters					X	
13.2.1.2.28	HLW Canister Size					X	
13.2.1.2.29	HLW Canister Weights					X	
13.2.1.2.30	HLW Canister Grapple					X	
13.2.1.2.31	Deleted	--	--	--	--	--	--
13.2.1.2.32	Tamper-Indicating Seal Removal					X	
13.2.1.2.33	Cask Hook Weight					X	
13.2.1.2.34	DPCs					X	
13.2.1.3	Remediation					X	
13.2.1.4	Failure of Moving Capability					X	
13.2.1.5	Transport Vehicle Retrieval					X	

Table 13-2. Mechanical Handling Conformance Verification (Cont'd)

Criterion		Preliminary Verification Method					
Number	**Description**	**N/A**	**Analysis**	**Exam**	**Demo**	**Review**	**Test**
13.2.2.1	IICD Volume 1 Compliance					X	
13.2.2.2	Dimensions					X	
13.2.2.3	Horizontal Cask Receipt and Vertical Handling					X	
13.2.2.4	Skid Handling					X	
13.2.2.5	Disposability Requirement					X	
13.2.2.6	No Handling Canister Contents					X	
13.2.2.7	Personnel Barriers					X	
13.2.2.8	Impact Limiters					X	
13.2.2.9	Hold-down Features					X	
13.2.2.10	Shielded Transfer Casks					X	
13.2.2.11	Site Transporter and Ancillary Equipment					X	
13.2.2.12	South Texas TAD					X	
13.2.2.13	SNF Processing					X	
13.2.2.14	Transportation Within/Between Facilities					X	
13.2.2.15	Redundant Stations					X	
13.2.3.1.1	Cask Handling Yokes		X				
13.2.3.1.2	Cask Handling Cranes		X				
13.2.3.1.3	Pool Yoke Lift Adapter		X				
13.2.3.1.4	Cask Transfer Trolleys		X				
13.2.3.1.5	Cask Preparation Crane		X				
13.2.3.1.6	Auxiliary Pool Crane		X				
13.2.3.1.7	Lid Lifting Grapples		X				
13.2.3.1.8	DPC Lid Adapters		X				
13.2.3.1.9	Long Reach Grapple Adapter		X				
13.2.3.1.10	Spent Fuel Transfer Machine		X				
13.2.3.1.11	BWR and PWR Lifting Grapples		X				
13.2.3.1.12	SNF Staging Rack		X				
13.2.3.1.13	Canister Transfer Machines		X				
13.2.3.1.14	Canister/Canister Transfer Machine Grapples		X				
13.2.3.1.15	Naval Canister Lifting Adapter		X				
13.2.3.1.16	DOE / Naval Waste Package Inner Lid Grapples		X				
13.2.3.1.17	TAD Canister Staging Racks		X				
13.2.3.1.18	DOE Canister Staging Racks		X				
13.2.3.1.19	Vertical Shielded Transfer Cask		X				
13.2.3.1.20	TAD Closure Jib Crane		X				
13.2.3.1.21	Waste Package Transfer Trolleys		X				
13.2.3.1.22	DPC Cutting Jib Crane		X				

Table 13-2. Mechanical Handling Conformance Verification (Cont'd)

Criterion		Preliminary Verification Method					
Number	Description	N/A	Analysis	Exam	Demo	Review	Test
13.2.3.1.23	Preparation Station Jib Cranes		X				
13.2.3.1.24	W74 Upper Basket Lifting Device		X				
13.2.3.1.25	Waste Package (Transfer Trolley) Shield Rings		X				
13.2.3.1.26	Entrance Vestibule Crane		X				
13.2.3.1.27	Transportation Cask						
13.2.3.1.28	Site Prime Mover		X				
13.2.3.1.29	Waste Package Handling Crane		X				
13.2.3.1.30	Waste Package Closure Remote Handling System Bridge		X				
13.2.3.1.31	Canister Transfer Machine Maintenance Crane (Reciept Facility)		X				
13.2.3.1.32	Lid Bolting Room Crane (Receipt Facility)		X				
13.2.3.1.33	Handling of Waste Forms and Waste Packages					X	
13.2.3.1.34	SNF Processing					X	
13.2.3.1.35	Waste Package Surface Defects					X	
13.2.3.1.36	DOE SNF Canisters		X				
13.2.3.1.37	Dual-Purpose Canister		X				
13.2.3.1.38	TAD Canister		X				
13.2.3.1.39	HLW Canisters		X				
13.2.3.1.40	Naval Spent Fuel Canisters		X				
13.2.3.1.41	Naval Cask Lift Bail and Lift Plate					X	
13.2.3.1.42	Horizontal Lifting Beam (Receipt Facility)					X	
13.2.3.1.43	Truck and Rail Cask Lid Adapters					X	
13.2.3.1.44	Horizontal Lifting Beam					X	
13.2.3.1.45	Cask Support Frames					X	
13.2.3.1.46	Deleted	--	--	--	--	--	--
13.2.3.2.1	Preliminary Hazard Analysis					X	
13.2.3.2.2	Industrial Safety					X	
13.2.4.1	Decontamination					X	
13.2.4.2	Transportation Cask Return to Service					X	
13.2.4.2.1	Naval Cask Contamination					X	
13.2.4.2.2	DOE Cask Contamination					X	
13.2.4.3	Facility to Aging Movement					X	
13.2.4.4	Cask Preparation					X	
13.2.4.5	Waste Form Loading Controls					X	
13.2.4.6	Tools and Equipment					X	
13.2.4.7	Waste Package Handling Contact					X	

14 Emplacement and Retrieval/Drip Shield Installation System

14.1 Overview

14.1.1 Introduction

The emplacement and retrieval/drip shield installation system transports waste packages from the surface to selected locations within the emplacement drifts, places waste packages in the emplacement drifts, and returns the transport and emplacement vehicles (TEV) to the surface. The function of this system begins when a sealed waste package and associated emplacement pallet are placed into the TEV at the surface. The function ends when the waste package is emplaced within the emplacement drift and the empty TEV is returned to the surface. In addition, this system includes waste package retrieval functions in the event that the retrieval of a waste package and associated emplacement pallet is required.

14.1.2 System Classification

The emplacement and retrieval/drip shield installation system has been classified as ITS. The TEV is ITS. The drip shield gantry and inspection gantry are non-ITS. The emplacement and retrieval/drip shield installation system does not include SSCs that are ITWI.

[Preclosure NSDB (BSC 2008 [DIRS 184200]), Appendix A, Table A-1 specifically provides the classification of the system.]

14.2 Functional and Performance Requirements and Bases

14.2.1 Mission Requirements

14.2.1.1 Retrieval

The emplacement and retrieval/drip shield installation system shall be designed to preserve the option of waste retrieval during the preclosure period so that any or all of the emplaced waste could be retrieved on a reasonable schedule starting at any time up to 50 years after waste emplacement operations are initiated.

[10 CFR 63.111(e)(1) [DIRS 180319]. Allocation is made to the repository, Subsurface Facility, waste packages, and E&R.]

14.2.1.2 Transport and Emplacement Vehicle

The emplacement and retrieval/drip shield installation system shall provide emplacement equipment, including the TEV to transport DOE and Commercial SNF and naval waste packages from the IHF and CRCFs into the Subsurface Facility. The emplacement and retrieval/drip shield installation system shall consist of new subsurface rail equipment that includes the TEV.

[MGR-RD [DIRS 177491],Section 3.2.5.F. Although the MGR-RD discusses procurement, this equipment is new and must be procured.]

14.2.1.3 South Texas TAD

The TEV shall be designed to accommodate the South Texas TAD canister within a waste package without modification. The South Texas TAD waste package shall be 248 inches long by 63 inches in diameter and shall weigh no more than 125,000 pounds.

[TMRB-2007-025 (BSC 2007 [DIRS 181499]), "Activities Not to Preclude Handling of South Texas Commercial Spent Nuclear Fuel in the Surface Facilities" provided management direction. The designers of the transport and emplacement vehicle, for additional conservatism, used 239 inches as the South Texas TAD canister length and 258 inches as the South Texas waste package length.]

14.2.1.4 Emplace Waste Package Functions

The emplace WP function includes transporting the WP from the surface to the drift entrance for its selected location, placing the WP in the emplacement drift, and returning the transport and emplacement vehicle (TEV) to the surface. This function begins with a sealed WP at the surface and ends when the WP is emplaced and the empty TEV is returned to the surface for redeployment. The operational functions of the TEV are:

- The capability to control the underground operations, which include WP transport to the subsurface facility and emplacement operations in repository drifts, as well as return of the TEV to the surface, shall be provided.
- WPs shall be received from the sealing area and prepared for transfer to the TEV.
- Handling components (if needed) shall be removed. Ancillary components shall be removed for reuse and to avoid impacts to long-term performance of the WP.
- Until modified by calculations or analysis, the capability shall be provided for rotating the WP to a horizontal position.
- The WP shall be secured in the TEV.
- The TEV shall transport the sealed WP such that the system accommodates the receipt rates, and the WP is protected from damage during transport.
- The TEV shall be returned to the surface facilities where it will be used again.
- The TEV shall be surveyed and inspected before reuse.
- The TEV shall deliver a loaded WP to the predetermined emplacement drift for final emplacement.
- The TEV and necessary emplacement equipment shall be ready to emplace the WP within the drift at its designated position and within allowable tolerances.

[PO&PR (BSC 2008 [DIRS 185008]), Sections 2.3.1- 2.3.11.]

14.2.2 General Requirements

14.2.2.1 Thermal Limits Within the TEV

The emplacement and retrieval/drip shield installation system TEV shall allow the waste packages to maintain SNF within the cladding and waste package surface temperature limits specified in Chapters 11 and 12.

[The emplacement and retrieval equipment affect the heat dissipation of the waste packages while contained in the TEV.]

14.2.2.2 Waste Package Separation

The emplacement and retrieval/drip shield installation system shall emplace adjacent waste packages 0.1 m (nominal) apart, from the top surface of the upper sleeve of one waste package to the bottom surface of the lower sleeve of the adjacent waste package.

[Postclosure Modeling and Analyses Design Parameters (BSC 2008 [DIRS 183627]), Table 1, item # 05-02.]

14.2.2.3 Subsurface Thermal Management

The emplacement and retrieval/drip shield installation system shall locate waste packages within an envelope such that the emplacement does not exceed the other relevant thermal limits of mid-pillar temperature, drift wall temperature, waste package temperature, and cladding temperature.

The maximum local-average line-load, other than naval waste packages, (over any seven waste package segment) in the emplaced repository will not exceed 2.0 kW/m, and no waste package shall exceed thermal output of 18.0 kW. The calculated Thermal Energy Density of any seven adjacent as-emplaced waste packages shall not exceed 96°C at the mid-pillar calculated using mean host-rock thermal properties and representative saturation levels for wet and dry conditions.

Naval waste packages shall not exceed a thermal load of 11.8 kW per waste package, and shall not be emplaced in a seven waste package segment, which contains another waste package in excess of 11.8 kW or has an average thermal line load greater than 1.45 kW/m.

[MGR-RD [DIRS 177491], Sections 3.2.12.C and 3.2.12.D, Postclosure Modeling and Analysis Design Parameters (BSC 2008 [DIRS 183627]), Table 1, item # 05-03 and PO&PR (BSC 2008 [DIRS 185008]), Sections 2.3.12, 2.3.13, and 2.5.7. The MGR-RD sections cited have been revised by CO Letter No. 08-007 (Peterson 2008 [DIRS 184939]) to provide for greater flexibility in the receipt and processing of the incoming commercial waste stream and yet maintain the conditions required for naval waste stream.]

14.2.3 Safety and Protection Requirements

14.2.3.1 NSDB Requirements

14.2.3.1.1 TEV

The emplacement and retrieval/drip shield installation system's TEV shall be designed to (a) protect against derailment of a TEV during loading of a waste package, (b) protect against a tipover of a TEV, (c) protect against ejection of the waste package from the shielded enclosure of the TEV, (d) protect against TEV runaway, and (e) protect against direct exposure of personnel (safety functions).

- The mean frequency of derailment of the TEV at the loadout station due to the spectrum of seismic events shall be less than or equal to 1.0×10^{-04} /yr.
- The mean frequency of tipover of the TEV due to the spectrum of seismic events shall be less than or equal to 2.0×10^{-06} /yr.
- The mean frequency of ejection of a waste package from the TEV due to the spectrum of seismic events shall be less than or equal to 2.0×10^{-04} /yr.
- The mean probability of runaway of a TEV that can result in a potential breach of a waste package shall be less than or equal to 5.0×10^{-09} per transport of a waste package.
- The mean probability of inadvertent TEV door opening shall be less than or equal to 1.0×10^{-07} per transport of a waste package.

[Preclosure NSDB (BSC 2008 [DIRS 184200]), Appendix B, Table B-1, Items HE.IH.01 through 03 for the IHF; Appendix D, Table D-1, Items HE.CR.01 through 03 for the CRCFs; and Appendix G, Table G-1, Items HE.SS.01 through 04 for the Subsurface Facility.]

14.2.4 Miscellaneous Requirements

14.2.4.1 Waste Package Handling and Emplacement Controls

Waste package handling and emplacement activities shall be monitored through equipment with resolution capable of detecting waste package damage. The waste package shall be handled in a controlled manner during fabrication, handling, transport, storage, emplacement, installation, operation, and closure activities to minimize damage; surface contamination; and exposure to adverse substances.

[Postclosure Modeling and Analyses Design Parameters (BSC 2008 [DIRS 183627]), Table 1, items # 03-20, # 03-21, # 03-22 and # 05-01. An operator and an independent checker shall perform the operations and verify proper waste package emplacement. Records demonstrating compliance shall be maintained.]

14.3 Conformance Verification

Table 14-1. Emplacement and Retrieval Conformance Verification

Criterion		Preliminary Verification Method					
Number	Description	N/A	Analysis	Exam	Demo	Review	Test
14.2.1.1	Retrieval		X				
14.2.1.2	Transport and Emplacement Vehicle					X	
14.2.1.3	South Texas TAD					X	
14.2.1.4	Emplace Waste Package Functions					X	
14.2.2.1	Thermal Limits Within the TEV		X				
14.2.2.2	Waste Package Separation					X	
14.2.2.3	Subsurface Thermal Management		X				
14.2.3.1.1	TEV		X				
14.2.4.1	Waste Package Handling and Emplacement Controls					X	

15 Non-Nuclear Handling System

15.1 Overview

15.1.1 Introduction

The non-nuclear handling system consists of SSCs necessary to receive empty waste package, TAD canister, shielded transfer cask (STC), and aging overpack components. Waste package components include empty waste packages, lids, and inner lid spread rings, and emplacement pallets. TAD canister components include empty TAD canisters and lids. STC components include empty STCs and lids. Aging overpacks components include aging overpacks and lids. When waste package, TAD canister, STC, and aging overpack components arrive, they are inspected and moved to a controlled storage area before use. These receipt, inspection and storage functions are performed in the WNNRF and associated facilities. The non-nuclear handling system is divided into receipt subsystem and the warehouse subsystem.

The receipt subsystem functions are as follows:

- Receives waste packages, TAD canisters, STCs, and AO components from railcars and trucks
- Performs receipt inspections on waste packages, TAD canisters, STCs, and AO components
- Prepares waste packages, TAD canisters, STCs, and AOs for waste handling operations
- Moves and transfers waste packages, TAD canisters, STCs, and AO components to and from designated storage areas
- Performs limited repairs on non-conforming waste packages, TAD canisters, STCs, and AOs.

The warehouse subsystem functions are as follows:

- Receives waste packages, TAD canisters, STCs, and AO components
- Provides the processes necessary to inspect waste packages, TAD canisters, STCs, and AO components
- Provides secure holding areas for non-conforming items following inspection.

When preclosure repository activities have been completed and all waste packages have been emplaced in the repository drifts, the non-nuclear handling system will have completed its primary mission. When repository closure commences, it is anticipated that this system may then be used to receive and inspect drip shields that would subsequently be placed over the previously emplaced waste packages.

15.1.2 System Classification

The non-nuclear handling system has been classified as non-ITS. The non-nuclear handling system does not include SSCs that are ITWI.

[Preclosure NSDB (BSC 2008 [DIRS 184200]), Appendix A, Table A-1 specifically provides the classification of the system.]

15.2 Functional and Performance Requirements and Bases

15.2.1 Mission Requirements

15.2.1.1 Annual Receipt Rate

The non-nuclear handling system shall receive, inspect, transfer, and store empty waste packages, STCs, and associated components as defined by the applicable receipt and inspection procedures to accommodate the required annual throughput rates.

[CRD (DOE 2007 [DIRS 182960]), Section 3.2.1B , MGR-RD [DIRS 177491], Section 3.1.1.J provides for the annual receipt rates. BCP YMP-2006-060 [DIRS 177878] BCP Reconciliation 1.5.06 BOP 2nd item specifically calls for this equipment in the WNNRF.]

15.2.1.2 Waste Package Configuration

The non-nuclear handling system shall configure empty waste packages and STCs with all equipment necessary for lifting, transferring, confining, and emplacement for transport to waste processing facilities.

[BCP YMP-2006-060 [DIRS 177878] BCP Reconciliation 1.5.06 BOP 2nd item specifically calls for this equipment in the WNNRF.]

15.2.1.3 Waste Package Conveyance

The non-nuclear handling system shall configure waste packages and site conveyance to transport waste packages to waste processing facilities. The handling of the empty waste packages and closure lids, emplacement pallets and drip shields shall not result in marring, contamination or other damage that makes those components unsuitable for disposal.

[Although BCP YMP-2006-060 [DIRS 177878] Reconciliation 1.5.06 BOP 2nd item specifically calls for equipment in the WNNRF to configure the waste package, the conveyance and handling is a derived function. The reference to the vertical orientation was deleted in accordance with TMRB-2007-039 (BSC 2007 [DIRS 182185]), WNNRF (Building 230) Scope Alignment.]

15.2.1.4 Inventory Identification

The non-nuclear handling system shall be used to read and record in the repository inventory system the inventory identification numbers from the STCs, waste packages, waste package lids, AOs, and any other applicable items that pass inspection.

[To assure that STCs, waste packages, and their components are of required dimensions. This information will be used to support material, control, and accountability.]

15.2.1.5 TAD Canisters

The non-nuclear mechanical handling system shall be designed to accommodate the empty TAD canisters within the WNNRF and associated facilities. The TAD canisters are described by the *Transportation, Aging, and Disposal Canister System Performance Specification (DOE 2007 [DIRS 181403])*.

[The MGR-RD [DIRS 177491],Section 3.1.2.F calls for receiving TAD canisters. The allocation to the non-nuclear handling system was provided in Criterion 2.2.1.11.]

15.2.2 General Requirements

15.2.2.1 Service Life

The non-nuclear handling system shall be designed to have an operational life of 50 years. Mechanical handling equipment shall satisfy this requirement directly or be maintainable or easily replaced over the system lifetime.

[This is a derived engineering requirement to ensure the system will support the entire emplacement period.]

15.2.2.2 QA Hold Area

The non-nuclear handling system shall be capable of moving STCs, waste packages, and waste package lids that do not pass inspection to a quality assurance hold area until they can be transported offsite.

[10 CFR 71.131 [DIRS 181967].]

15.2.2.3 Environmental Considerations

The non-nuclear handling system components shall be designed to withstand and operate in the environment in which the system components are located.

[Derived engineering requirement based on the extreme weather conditions at the site and the logical need to provide the capability.]

15.2.2.4 Operations Control

The non-nuclear handling system shall provide real real-time monitoring, control, and data acquisition for use by the facility operators. Control capabilities shall be provided locally where dictated by the operation.

[This requirement is to ensure there is a means to control and monitor facility operations at all times.]

15.2.3 Safety and Protection Requirements

15.2.3.1 Fire Hazard Analysis

The non-nuclear handling system shall be designed and operated to minimize fire hazards and shall consider mitigation features as identified in the facility fire hazard analysis.

[This requirement is to ensure that the fire protection goals are met.]

15.2.4 Miscellaneous Requirements

15.2.4.1 Materials Handling

The non-nuclear handling system shall evaluate any material or object contacting the waste package outer surfaces to ensure that any physical degradation and contamination are within allowable limits.

[Postclosure Modeling and Analyses Design Parameters (BSC 2008 [DIRS 183627]), Table 1, item # 03-20.]

There are no identified requirements for this section. As requirements are identified in the future, they will be added.

15.3 Conformance Verification

Table 15-1. Non-Nuclear Handling Conformance Verification

Criterion		Preliminary Verification Method					
Number	Description	N/A	Analysis	Exam	Demo	Review	Test
15.2.1.1	Annual Receipt Rate		X				
15.2.1.2	Waste Package Configuration					X	
15.2.1.3	Waste Package Conveyance				X		
15.2.1.4	Inventory Identification				X		
15.2.1.5	TAD Canisters					X	
15.2.2.1	Service Life					X	
15.2.2.2	QA Hold Area					X	
15.2.2.3	Environmental Considerations					X	
15.2.2.4	Operations Control					X	
15.2.3.1	Fire Hazard Analysis		X				
15.2.4.1	Materials Handling					X	

16 Electrical Power System

16.1 Overview

16.1.1 Introduction

The electrical power system provides adequate and reliable power for construction and operation of all surface and subsurface facilities. The electrical power system consists of the switchyard, standby power, normal power, ITS power, and emergency (life safety) power. The electrical power system interfaces with the electrical support system, described in Section 17, and with all surface and subsurface facilities.

The electrical power system receives power from two off-site utility power supplies. The supplies are connected to the 138kV switchyard and managed to supply all 13.8kV switchgear buses. The electrical power is transformed into usable voltages and distributed to the facilities needing electrical power. The electrical power system shall provide for nuclear facilities, waste handling systems, infrastructure systems, construction power demands, and a variety of other support functions. This system ends at the load connection to equipment.

16.1.2 System Classification

The ITS diesel generators A and B, including ITS diesel generator fuel oil system, ITS diesel generator air start system, ITS diesel generator jacket water cooling system, ITS diesel generator lubricating oil system, ITS diesel generator air intake and exhaust system has been classified as ITS. The ITS power feeders up to and including ITS loads, ITS direct current power, and ITS UPS power has been classified as ITS.

The switchyard and standby power, emergency power (life safety), normal power, normal direct current electrical power, normal UPS power, site electrical distribution (for normal power), renewable energy, and standby diesel generators are non-ITS. The electrical power system does not include SSCs that are ITWI.

[Preclosure NSDB (BSC 2008 [DIRS 184200]), Appendix A, Table A-1 specifically provides the classification for the system and Appendix F, Table F-1 provides the functions. The 'Emergency' designations for the electrical system was changed to ITS and emergency power (life safety) added in accordance with Repository System Codes (BSC 2007 [DIRS 184183]).]

16.2 Functional and Performance Requirements and Bases

16.2.1 Mission Requirements

16.2.1.1 Adequate and Reliable Power

The electrical power system shall be provided with an adequate and reliable power supply from an electric utility company.

[PO&PR (BSC 2008 [DIRS 185008]), Section 2.7.9.]

16.2.1.2 Offsite Power

The electrical power system shall be designed to utilize two offsite power supplies; each circuit feeding two or more transformers. Each of the circuits shall be able to supply power to all substation buses in the event that the other circuit is lost. The offsite power supplies shall be the normal power for the repository.

[Dual power sources increase the reliability of the power system.]

16.2.1.3 Continuous AC/DC Power

The repository shall be designed to ensure uninterrupted alternating current/direct current to the necessary ITS instruments, facility service systems, operating systems, and to selected non-ITS systems.

[Requirement ensures critical loads have constant and continuous power. Specific non-ITS system loads are not currently identified.]

16.2.1.4 Deleted

[Although this criterion previously included a load growth margin, Engineering has moved this to the PDC (BSC 2007 [DIRS 179641]).]

16.2.1.5 Voltage Regulation

The electrical power system shall regulate utilization voltage.

[Regulating the utilization voltage will ensure the power system can adequately supply power to end item equipment.]

16.2.2 General Requirements

16.2.2.1 Switchyard

The switchyard shall contain the necessary equipment to distribute normal power to the repository.

[Derived engineering requirements will define the location of the power distribution equipment.]

16.2.2.2 Switchgear Facilities

The switchyard shall contain the main switchgear facilities. The switchgear facilities shall provide a temperature controlled environment for environmentally sensitive equipment.

[Derived engineering requirements will ensure the functionality of electrical components that are sensitive to extreme temperature variations.]

16.2.2.3 Standby Power Subsystem

The standby power subsystem shall provide power to selected loads on the normal power subsystems in the event that the offsite power supply is unavailable.

[This requirement provides reliable power to repository operations and standby power for those items that are non-ITS but that would be considered to provide necessary operability in the event of a loss of normal power, such as emergency communications equipment.]

16.2.2.4 Deleted

[This requirement was combined into Criterion 16.2.1.2.]

16.2.2.5 ITS Redundancy and Independence

The ITS power subsystem shall be redundant and independent. The ITS power subsystem shall be powered by two independent sources of electrical power. The normal supply shall be from the offsite source taken from the transmission network. The backup supply shall be provided by the onsite ITS diesel generator connected to the ITS switchgear.

[Derived engineering requirements will ensure redundancy of the ITS power subsystem. Emergency changed to ITS in accordance with Repository System Codes (BSC 2007 [DIRS 184183]).]

16.2.2.6 ITS Loads During Loss of Offsite Power

The ITS power subsystem shall supply power to ITS loads-for operation during offsite power loss or outages.

[Defines the ITS power subsystem. Emergency changed to ITS in accordance with Repository System Codes (BSC 2007 [DIRS 184183]).]

16.2.2.7 Deleted

[This requirement was combined into Criterion 16.2.2.6.]

16.2.2.8 UPS Power for DCMIS

The electrical power subsystem shall provide the UPS power for the DCMIS.

[Required to maintain the control and management systems operable in off-normal conditions. Specific criteria are in the PDC (BSC 2007 [DIRS 179641].]

16.2.2.9 Electrical Connection for Rail Equipment Maintenance Yard

The electrical power system shall provide normal power to the Rail Equipment Maintenance Yard, located outside of the GROA, at a capacity of 8 megawatts, including 30% reserve capacity. Two 13.8 kV breakers will be made available within the Valley Electric Switchyard. The interface coordinates between the repository and REMY is at

N 761,616 and E 570,276.

[DOE CO Letter 07-020 (Hamilton-Ray 2007 [DIRS 181033] has directed BSC to update the BOD to include requirements for the Rail Equipment Maintenance Yard located outside of the GROA. GROA/REMY Internal Constraints (BSC 2007 [DIRS 183653]), Table 2.1-1, IC-4 and IICD Volume 2 (DOE 2007 [DIRS 176810]), Section 3.1.16.4. It is estimated that the Rail Equipment Maintenance Yard will require 6 megawatts of power and the Cask Maintenance Facility will require approximately 2 megawatts of power.]

16.2.3 Safety and Protection Requirements

16.2.3.1 NSDB Requirements

16.2.3.1.1 ITS Electrical Power

The feeders up to and including ITS loads, ITS direct current power, and ITS UPS power shall provide electrical power to the ITS surface nuclear confinement HVAC systems (safety function).

- The mean conditional probability for ITS electrical power failure, given the loss of offsite power, shall be less than or equal to 2.0×10^{-02} over a period of 360 hours following the breach of a cask-canister system.

[Preclosure NSDB (BSC 2008 [DIRS 184200]), Appendix C, Table C-1, Item EE.RF.01 for the Receipt Facility; Appendix D, Table D-1, Item EE.CR.01 for the CRCFs; and Appendix E, Table E-1, Item EE.WH.01 for the WHF. Emergency changed to ITS in accordance with Repository System Codes (BSC 2007 [DIRS 184183]).]

16.2.3.1.2 ITS Diesel Generators

The ITS diesel generators [A and B] (including their fuel oil, air start, jacket water cooling, lubricating oil, and air intake and exhaust systems) shall provide electrical power to the ITS surface nuclear confinement HVAC systems (safety function).

- The mean conditional probability for ITS electrical power failure, given the loss of offsite power, shall be less than or equal to 7.0×10^{-01} over a period of 360 hours following the breach of a cask-canister system.

[Preclosure NSDB (BSC 2008 [DIRS 184200]), Appendix C, Table C-1, Item EE.RF.02 for the Receipt Facility; Appendix D, Table D-1, Item EE.CR.02 for the CRCFs; and Appendix E, Table E-1, Item EE.WH.02 for the WHF. Emergency changed to ITS in accordance with Repository System Codes (BSC 2007 [DIRS 184183]).]

16.2.4 Miscellaneous Requirements

There are no identified requirements for this section. As requirements are identified in the future, they will be added.

16.3 Conformance Verification

Table 16-1. Electrical Power Conformance Verification

Criterion		Preliminary Verification Method					
Number	**Description**	**N/A**	**Analysis**	**Exam**	**Demo**	**Review**	**Test**
16.2.1.1	Adequate and Reliable Power					X	
16.2.1.2	Offsite Power					X	
16.2.1.3	Continuous AC/DC Power					X	
16.2.1.4	Deleted	--	--	--	--	--	--
16.2.1.5	Voltage Regulation					X	
16.2.2.1	Switchyard					X	
16.2.2.2	Switchgear Facilities					X	
16.2.2.3	Standby Power Subsystem					X	
16.2.2.4	Deleted	--	--	--	--	--	--
16.2.2.5	ITS Independence					X	
16.2.2.6	ITS Loads During Loss of Offsite Power					X	
16.2.2.7	Deleted	--	--	--	--	--	--
16.2.2.8	UPS Power for DCMIS					X	
16.2.2.9	Electrical Connection for Rail Equipment Maintenance Yard					X	
16.2.3.1.1	ITS Electrical Power		X				
16.2.3.1.2	ITS Diesel Generators		X				

17 Electrical Support System

17.1 Overview

17.1.1 Introduction

The electrical support system is composed of six subsystems involved in ensuring the electrical power system and facilities are operable. Although they are grouped as one support system, each of these subsystems has specific functions in providing support for the electrical power system and facilities. The electrical support system includes lighting, grounding, lightning protection, cathodic protection, heat tracing, and cable raceway.

17.1.2 System Classification

The electrical support system components that provide the lighting, grounding, lightning protection, cathodic protection, heat tracing, and the cable raceway have been classified as non-ITS. The electrical support system does not include SSCs that are ITWI.

[Preclosure NSDB (BSC 2008 [DIRS 184200]), Appendix A, Table A-1 specifically provides the classification of the system.]

17.2 Functional and Performance Requirements and Bases

17.2.1 Mission Requirements

There are no identified requirements for this section. As requirements are identified in the future, they will be added.

17.2.2 General Requirements

17.2.2.1 Lighting

The lighting subsystem shall provide an adequate level of illumination for repository operations and maintenance. Furthermore, based on the lighting requirements during different operating modes, the lighting subsystem is divided into three systems: normal, essential, and emergency lighting systems:

- Normal Lighting-Provide an adequate level of illumination during normal operating mode
- Essential Lighting-Provide an adequate level of illumination using standby diesel generators in areas where repository operations and processes cannot tolerate long periods of loss of light during total loss of offsite power sources (utility sources)
- Emergency Lighting-Provide an adequate level of illumination for control operations, egress from the facility, or personnel safety during off-normal events.

[The lighting subsystem will ensure repository operations are well and sufficiently illuminated.]

17.2.2.2 Grounding

The grounding subsystem shall ensure that personnel and operating equipment are safe from harmful and destructive effects of high ground potential or lightning strike under all modes of repository operating conditions. It shall protect personnel from electric shock and equipment from excessive voltages, facilitate fault isolation, permit maximum dissipation of ground fault currents, and provide a stable reference for instrumentation and control circuits.

[Derived engineering requirement to ensure the repository power system is protected.]

17.2.2.3 Lightning Protection

The lightning protection subsystem shall be installed for high risk elevated structures and provide a designated low resistance path to ground.

[The lightning protection subsystem will mitigate the effect of lightning strikes to elevated high risk structures.]

17.2.2.4 Cathodic Protection

The cathodic protection subsystem shall control external corrosion on buried metallic pipes, tanks, and structures that are in contact with the ground.

[Derived engineering requirement based on soil properties and to decrease corrosion.]

17.2.2.5 Heat Tracing

The heat tracing subsystem shall maintain safe operating temperatures and provide freeze protection for repository equipment, components, or fluids sensitive to temperature variations.

[Derived engineering will ensure temperature sensitive equipment is maintained at manufacturer recommendations.]

17.2.2.6 Cable Raceways

The cable raceway system shall provide physical support, protection, and voltage class separation, as required for cable raceways.

[Derived engineering requirement will ensure the cable raceways adhere to NEC and IEEE codes and standards.]

17.2.3 Safety and Protection Requirements

17.2.3.1 Radiation Environment

The electrical support system components shall be hardened or properly shielded to withstand and operate under the radiation levels in which they are installed commensurate with the performance basis of the equipment.

[The requirement ensures that the system components will perform intended functions The hazard analyses for this system or facility are incomplete, but they are assumed to be applicable. This section will be updated for each hazard with information on applicability or non-applicability, mitigating or fail-safe performance requirements, environments, monitoring, alarms, and interfaces. Additional information is presented in Preliminary Hazards Analysis for License Application Study (BSC 2004 [DIRS 167313]).]

17.2.3.2 Deleted

17.2.3.3 Seismic Loads

All raceways that support functions of the ITS power subsystem and credited with mitigating consequences of a seismically initiated event shall be designed to class 1E standards.

[This design requirement is based on the requirements of IEEE Std. 344™-2004 [DIRS 176259]. The support for the ITS cabling in raceways also includes underground concrete duct banks, such as between the EDGF and the nuclear handling facilities where the support for the cable is the concrete. Emergency changed to ITS in accordance with Repository System Codes (BSC 2007 [DIRS 184183]).]

17.2.3.4 Environmental Conditions

The electrical support systems for the ITS electrical power system shall include provisions to ensure the system functions under conditions such as high winds, rainstorms, or tornadoes.

[Derived engineering requirement to ensure the ITS electrical support system is reliable in extreme environmental conditions. Emergency changed to ITS in accordance with Repository System Codes (BSC 2007 [DIRS 184183]).]

17.2.3.5 Flood Protection

The electrical support system components shall be installed in a manner that prevents damage to these components as a result of flooding.

[This requirement is necessary to prevent power outages and damage to electrical power systems due to flooding.]

17.2.4 Miscellaneous Requirements

There are no identified requirements for this section. As requirements are identified in the future, they will be added.

17.3 Conformance Verification

Table 17-1. Electrical Support Conformance Verification

Criterion		Preliminary Verification Method					
Number	Description	N/A	Analysis	Exam	Demo	Review	Test
17.2.2.1	Lighting						X
17.2.2.2	Grounding					X	
17.2.2.3	Lightning Protection					X	
17.2.2.4	Cathodic Protection					X	
17.2.2.5	Heat Tracing					X	
17.2.2.6	Cable Raceways					X	
17.2.3.1	Radiation Environment		X				
17.2.3.2	Deleted	--	--	--	--	--	--
17.2.3.3	Seismic Loads		X				
17.2.3.4	Environmental Conditions					X	
17.2.3.5	Flood Protection			X			

18 Fire Protection System

18.1 Overview

18.1.1 Introduction

The objectives of the fire protection system are to minimize the potential for

(1) the occurrence of fire or related event;
(2) a fire that causes an unacceptable onsite or offsite release of hazardous or radiological material that will threaten the health and safety of employees, the public, or the environment;
(3) vital DOE programs suffering unacceptable interruptions as a result of fire and related hazards;
(4) property losses from a fire and related events exceeding defined limits established by DOE; and
(5) critical process controls and safety class systems being damaged as a result of a fire and related events.

The fire protection system consists of the following subsystems and their functions:

- The fire suppression subsystem provides automatic and manual suppression to the fire areas requiring mitigation identified in the fire hazard analysis for each of the repository facilities.
- The fire alarm subsystem monitors all fire alarm, supervisory, and trouble signals from the fire alarm panels on the site at a central location in the Fire Rescue and Medical Facility.
- The fire detection subsystem provides detection and alarm signals at the local/facility panels at the protected premises.
- The fire water subsystem stores and distributes fire water to the fire hydrants and automatic sprinkler systems, standpipes, and hose stations in the protected facilities.
- The fire barrier subsystem provides the means to limit fire propagation and smoke migration to unaffected facility areas and equipment.
- The explosion protection subsystem provides the means to limit and protect SSCs from credible explosion hazards.

18.1.2 System Classification

The double-interlock preaction valves, sprinkler heads, and system actuation panels associated with double-interlock preaction suppression systems for fire suppression in areas where nuclear materials are handled have been classified as ITS. The fire detection system for the double-interlock preaction valve with associated detectors and control box are classified as ITS.

The fire suppression system components other than those associated with double-interlock preaction suppression systems for fire suppression in areas where nuclear materials are handled are non-ITS. The fire detection system or all other systems except the double-interlock preaction valve with associated detectors and control box are non-ITS. The fire water, fire barriers, explosion protection, and fire alarm are non-ITS. The fire protection system does not include SSCs that are ITWI.

[Preclosure NSDB (BSC 2008 [DIRS 184200]), Appendix A, Table A-1 specifically provides the classification of the system and Appendix D, Table D-1 for the functions. TMRB-2007-038 (BSC 2007 [DIRS 182184]), Preaction Double Interlock Fire Suppression.]

18.2 Functional and Performance Requirements and Bases

18.2.1 Mission Requirements

18.2.1.1 Fire Protection Design Requirements

The design of the Fire Protection System shall provide the following:

- A reliable water supply of adequate capacity for fire suppression
- Non-combustible or fire-resistive construction and fire-rated barriers
- Automatic fire extinguishing systems
- Redundant fire protection systems where safety class systems are vulnerable to fire damage and where no redundant safety capability exists outside of the fire area, or where the maximum possible fire loss exceeds limits established by DOE. Redundant safety class systems shall be in separate fire areas.
- A fire alarm signal system

- A fire detection system
- Fire protection features as determined by Fire Hazard Analysis or Safety Analysis Report

[DOE O 420.1A [DIRS 159450] Contractor Requirement 4.2.2.1-4.2.2.10, define criteria for a comprehensive fire protection program that is expected to contain or provide specific criteria for these subsystems or components.]

18.2.2 General Requirements

18.2.2.1 Fire Suppression

Automatic suppression system shall be installed as determined by the fire hazard analysis as necessary to control fires until such time that an emergency response force arrives and to limit the maximum possible fire loss.

[DOE O 420.1A [DIRS 159450] Section 4.2.2.3 for automatic fire suppression and DOE G 440.1-5, Implementation Guide for Use with DOE Orders 420.1 and 440.1 Fire Safety Program, [DIRS 144423], Section 9.6. The basis for the choice of a particular system style for protection shall be described in the fire hazard analysis. Light hazard occupancy sprinkler system design densities shall not be used.]

18.2.2.2 Fire Protection Redundancy

The fire protection system shall provide redundant fire protection in areas where the maximum possible fire loss exceeds $50 million. Redundant fire protection shall include items such as a fire barrier system or a smoke detection system in conjunction with a fully capable fire department, and other options.

[DOE G 440.1-5 1995 [DIRS 144423], Section IV, paragraph 9.7.]

18.2.2.3 Automatic Suppression Systems

The system shall provide automatic fire suppression in facilities that have a ground floor area in excess of 5,000 sq ft or where the maximum fire loss exceeds $1 million.

[DOE G 440.1-5 [DIRS 144423], Section IV, Paragraph 9.7.]

18.2.2.4 Occupant Notification

Local fire alarm occupant notification shall be provided throughout the entire facility originating the alarm. A fire zone alarm panel or graphic zone alarm panel shall be provided at the main entrance to major facilities. A manual fire notification method, such as manual fire alarm initiation devices, shall be provided at all normally occupied facilities.

[DOE O 420.1A [DIRS 159450], Contractor Requirement 4.2.2.6. The alarm panel will provide the CCCF with trouble, supervisory, and alarm notification.]

18.2.2.5 Fire Detection Availability

Fire detection and fire alarm signaling shall be provided for all other buildings and areas where fire damage is postulated to occur per a fire hazard analysis and no other fire protection system is provided.

[Although not specifically worded as stated, DOE O 420.1A [DIRS 159450], Contractor Requirement 4.2.2.5 and DOE G 440.1-5 [DIRS 144423], Section III, 2.0 and 6.6, and Section IV, 9.6 provide for fire protection coverage as described.]

18.2.2.6 Fire Detection System Design

Fire Protection systems shall be designed such that their inadvertent operation, inactivation, or failure of the systems structural stability will not result in the loss of vital safety functions or inoperability of safety class systems.

[DOE O 420.1A [DIRS 159450], Contractor Requirement 4.2.2.10.]

18.2.2.7 Fire Water Distribution

The fire water distribution piping shall meet the following performance requirements:

1. The fire water distribution piping shall be of a looped type grid that provides a two-way water flow; fire water piping, except the subsurface zone, shall be separate from all other water piping systems.
2. Sectional valves shall be arranged to provide alternate water flow paths to any point in the system.

3. The fire water loop shall be sized as required to furnish anticipated water criteria and type of pipe.
4. Sectional control valves shall be provided to limit the number of hydrants and individual sprinkler systems made inoperative during a single line break or impairment to a maximum of five.

[Although not specifically provided by DOE O 420.1A [DIRS 159450], these requirements meet the intent of the reference Section 4.2.2.]

18.2.2.8 Fire Barrier Subsystem

Fire barriers defining the boundaries of fire areas, separating SSC ITS and redundant trains, or providing safe egress shall be identified in the applicable FHA. Construction of facility walls, floor and ceilings should be noncombustible. Openings through fire barriers should be sealed or closed to provide a fire resistance rating at least equal to that required of the barrier itself. Fire barriers should be design and constructed per NFPA 221, *Standard for High Challenge Fire Walls, Fire Walls, and Fire Barrier Walls [DIRS 177544]*.

[Regulatory Guide 1.189 [DIRS 155040], Section C 4.2.1.]

18.2.2.9 Explosion Protection Subsystem

SSC ITS must be designed and located to minimize the probability and effect of fires and explosions. In situ and transient explosion hazards should be identified and suitable protection provided. Transient explosion hazards that cannot be eliminated should be controlled and suitable protection provided.

[Regulatory Guide 1.189 [DIRS 155040], Sections C 4.1.2 and C 4.1.8.]

18.2.3 Safety and Protection Requirements

18.2.3.1 NSDB Requirements

18.2.3.1.1 Preaction Double-Interlock Fire Suppression

The fire protection system shall utilize a double-interlock preaction fire suppression system in areas that contains waste forms (nuclear materials). The fire detection system for the double-interlock preaction valve with associated detectors, solenoid valve, and actuation panel shall:

- Prevent spurious actuation of the fire suppression system.

[TMRB-2007-038 (BSC 2007 [DIRS 182184]), Preaction Double Interlock Fire Suppression. This criterion also partially satisfies PO&PR (BSC 2008 [DIRS 185008), Section 2.6.2.]

18.2.3.1.2 Fire Suppression Moderator Control

The fire suppression system double-interlock preaction valves, sprinkler heads, and system actuation panels associated with double-interlock preaction suppression systems for fire suppression in areas where nuclear materials are handled shall be designed to maintain moderator control (safety function).

- The mean probability of inadvertent introduction of fire suppression water into a canister shall be less than or equal to 1.0×10^{-06} over a 720-hour period following the breach of a cask-canister system CRCFs, WHF, and Receipt Facility.

[Preclosure NSDB (BSC 2008 [DIRS 184200]), Appendix B, Table B-1 does not contain criteria for the IHF; Appendix C, Table C-1, Item FP.RF.01 for the Receipt Facility; Appendix D, Table D-1, Item FP.CR.01 for the CRCFs; and Appendix E, Table E-1, Item FP.WH.01 for the WHF. This criterion also partially satisfies PO&PR (BSC 2008 [DIRS 185008]), Section 2.6.2.]

18.2.3.1.3 Fire Detection Moderator Control

The fire detection system for the double-interlock preaction valve with associated detectors and control box shall be designed to maintain moderator control (safety function).

- The mean probability of inadvertent introduction of fire suppression water into a canister shall be less than or equal to 1.0×10^{-06} over a 720-hour period following the breach of a cask-canister system in the CRCFs, WHF, and Receipt Facility.

[Preclosure NSDB (BSC 2008 [DIRS 184200]), Appendix B, Table B-1 does not contain criteria for the IHF; Appendix C, Table C-1, Item FP.RF.02 for the Receipt Facility; Appendix D, Table D-1, Item FP.CR.02 for the

CRCFs; and Appendix E, Table E-1, Item FP.WH.02 for the WHF. This criterion also partially satisfies PO&PR (BSC 2008 [DIRS 185008]), Section 2.6.2.]

18.2.4 Miscellaneous Requirements

18.2.4.1 Fire Protection System Testing

The inspection, testing, and maintenance program for the fire protection features, apparatus, and equipment shall be based on industry standards, such as those established by the National Fire Protection Association (NFPA).

[DOE G 440.1-5-1995 [DIRS 144423], Section IV, 3.2.]

18.3 Conformance Verification

Table 18-1. Fire Protection Conformance Verification

Criterion		Preliminary Verification Method					
Number	Description	N/A	Analysis	Exam	Demo	Review	Test
18.2.1.1	Fire Protection Design Requirements					X	
18.2.2.1	Fire Suppression					X	
18.2.2.2	Fire Protection Redundancy					X	
18.2.2.3	Automatic Suppression Systems					X	
18.2.2.4	Occupant Notification						X
18.2.2.5	Fire Detection Availability					X	
18.2.2.6	Fire Detection System Design					X	
18.2.2.7	Fire Water Distribution					X	
18.2.2.8	Fire Barrier Subsystem					X	
18.2.2.9	Explosion Protection Subsystem					X	
18.2.3.1.1	Preaction Double-Interlock Fire Suppression						X
18.2.3.1.2	Fire Suppression Moderator Control						X
18.2.3.1.3	Fire Detection Moderator Control						X
18.2.4.1	Fire Protection System Testing						X

19 Surface Nuclear Confinement HVAC System

19.1 Overview

19.1.1 Introduction

The surface nuclear confinement HVAC system limits the spread and release of airborne contaminants within the nuclear facilities and to the outdoor environment. It provides conditioned air for cooling, heating, and ventilation to meet the air quality standard required for the safety, health, and comfort of the occupational personnel and also maintains the environmental conditions suitable for the proper performance of the equipment and components located in the confinement zones.

In order to limit the spread and release of airborne radioactive contamination to workers and the public, the surface nuclear confinement HVAC system is an active system that maintains a negative pressure, with respect to the ambient atmospheric pressure, in all confinement areas resulting in a flow of air throughout the facility, continuously directed from the outside atmosphere (in-leakage) through confinement zones of progressively greater contamination potential until it is ultimately exhausted or recirculated through one or more stages of HEPA filters.

Areas that have the potential for airborne radioactive contamination are classified as confinement zones and are maintained at progressively increasing negative differential pressure. The objective is for the air to flow from zones with lower contamination potential to those zones with higher contamination potential. The non-confinement zones of the nuclear facilities are served by the surface non-confinement HVAC system.

19.1.2 System Classification

The surface nuclear confinement HVAC system has been classified as ITS. The portions of the surface nuclear confinement HVAC system that are ITS, are those systems that exhaust from areas with a potential for a breach and the systems that support the cooling of ITS electrical and battery rooms.

The portions of the surface nuclear confinement HVAC system that are non-ITS, are those systems that do not exhaust from areas with a potential for a breach or do not support the cooling of ITS electrical equipment and battery rooms, including SSCs that supply ITS tertiary confinement areas and non-ITS tertiary confinement areas. The surface nuclear confinement HVAC system does not include SSCs that are ITWI.

[Preclosure NSDB (BSC 2008 [DIRS 184200]), Appendix A, Table A-1 specifically provides the classification for the system.]

19.2 Functional and Performance Requirements and Bases

19.2.1 Mission Requirements

19.2.1.1 Confinement System Design

The surface nuclear confinement HVAC system shall be designed to:

- Maintain confinement of sources of contamination by providing exhaust air quantities equal to or greater than the building in-leakage rates
- Remove airborne particulates from the discharge air streams to ensure emissions are within prescribed limits
- Provide a temperature controlled environment in continuously occupied areas
- Satisfy relevant statutory, DOE, and NRC regulations
- Provide a controlled environment for equipment operability

[PO&PR (BSC 2008 [DIRS 185008]), Section 2.7.10 describes functions for the nuclear areas.]

19.2.1.2 Confinement Zones

The confinement and non-confinement HVAC system shall be separate and independent from each other. The confinement HVAC systems shall maintain the required negative pressure differential from adjacent confinement zones to prevent leakage to adjacent rooms during normal operation and during an event sequence.

[DOE-HDBK-1169-2003, Nuclear Air Cleaning Handbook [DIRS 167097].]

19.2.1.3 Air Quality

The surface nuclear confinement HVAC system shall provide sufficient air quality and quantity in the BOP occupied facilities, and the non-confinement areas of the waste handling facilities.

[This requirement is considered necessary for defining the system functions.]

19.2.2 General Requirements

19.2.2.1 Single Failure

The ITS confinement HVAC system shall be provided with redundant SSCs, and a fail-safe control system, to ensure continuous operation of the system. Physical separation shall be provided so that damage to one unit does not also cause damage to the redundant unit.

[This requirement is to ensure that the safety function of the ITS system will be met during and following an event sequence. Although previous requirements have cited regulatory guidance documents as the source, this statement does not come from the guides.]

19.2.2.2 Non-ITS SSCs Interaction with ITS SSCs

The surface nuclear confinement HVAC system shall be designed such that interfaces between non-ITS SSCs and ITS SSCs that upon failure could prevent safety functions from being performed:

- have a probability of failure of less than 1E-04 over the preclosure period (as determined by PCSA),
- will not damage the ITS component if not screened out, or
- damage to the ITS SSC does not result in a doses in excess of the 10 CFR 63.111 [DIRS 180319] performance standard (as determined by PCSA).

The design of the interface shall include the dynamic loads and displacements produced by both sets of SSCs up to the first anchor point beyond the interface. Additionally, either:

- The collapse of the non-ITS SSC shall not cause it to strike an ITS SSC,
- The collapse of the non-ITS SSC shall not impair the integrity of the ITS SSC, or
- The non-ITS SSC shall be analyzed and designed to the same seismic DBGM as the ITS SSCs subjected to the potential unacceptable interaction.

Acceptable methods of isolating each non-ITS SSC with an adverse interaction include constraints, barriers, or relocation of the non-ITS SSC.

[The discussion of isolation and anchor point boundary for the design is from NUREG-0800, Section 3.7.3, subsection II.8 (NRC 1989 [DIRS 165112]). Although the NUREG is not directly applicable to the repository as it is not a reactor plant, the repository does have both non-ITS and ITS SSCs that should have the same design considerations of the interactions. The specific criterion is contained in the PDC (BSC 2007 [DIRS 179641], Section 6.1.10.2, for any non-ITS/ITS interactions. This requirement is commonly called the two-over-one requirement.]

19.2.2.3 ITS Power Supply

ITS electrical power shall be provided to the ITS nuclear confinement HVAC systems and associated instruments and controls.

[This requirement is to ensure that those ITS functions of the HVAC system remain operable on loss of normal electrical power. Although previous document have cited regulatory guidance documents as the source, this statement does not come from the guides. Emergency changed to ITS in accordance with Repository System Codes (BSC 2007 [DIRS 184183]).]

19.2.2.4 Exhaust Monitoring

The confinement exhaust ventilation system shall be provided with a continuous airborne radioactivity effluent monitoring system. The monitoring system shall provide the data to confirm that the subject facility has met its airborne radioactive effluent regulatory obligations.

[This requirement is derived from 10 CFR 63.112(e)(4) and (e)(10) [DIRS 180319] that is not allocated to a repository system for performance. This requirement is revised by Environmental, Safety, and Health for specific derived design requirements. The requirement is historically provided for the system. See Chapter 28 for Radiation/Radiological Monitoring System requirements.]

19.2.3 Safety and Protection Requirements

19.2.3.1 NSDB Requirements

19.2.3.1.1 Confinement HVAC Availability

Portions of the surface nuclear confinement HVAC system that exhaust from areas with a potential for a breach in the CRCFs, Receipt Facility, and WHF shall be designed to mitigate the consequences of radionuclide release (safety function).

- The mean probability that the [ITS surface nuclear] confinement HVAC system (including HEPA filtration) in the confinement areas becomes unavailable during a 30-day mission time following a radionuclide release shall be less than or equal to 4.0×10^{-02} in the CRCFs, WHF, and Receipt Facility.

[Preclosure NSDB (BSC 2008 [DIRS 184200]), Appendix C, Table C-1, Item VC.RF.01 for the Receipt Facility; Appendix D, Table D-1, Item VC.CR.01 for the CRCFs; and Appendix E, Table E-1, Item VC.WH.01 for the WHF. These parameters to not apply in the case of large fires, which may disable the HVAC system.]

19.2.3.1.2 Confinement HVAC Supporting ITS Electrical Equipment

Portions of the surface nuclear confinement HVAC system that support the cooling of ITS electrical and battery rooms shall be designed to support the ITS electrical function (safety function).

- The mean conditional probability of failure of the portions of the surface nuclear confinement HVAC system that support the cooling of ITS electrical equipment and battery rooms in the CRCF, WHF, and Receipt Facility shall be less than or equal to 1.0×10^{-02} per ITS electrical train.

[Preclosure NSDB (BSC 2008 [DIRS 184200]), Appendix C, Table C-1, Item VC.RF.02 for the Receipt Facility; Appendix D, Table D-1, Items VC.CR.02 and 03 for the CRCFs; and Appendix E, Table E-1, Items VC.WH.02 and 03 for the WHF. Failures of this system are captured in the facility ITS electrical system reliability model. A similar criterion does not exist for the IHF.]

19.2.3.2 Security Requirements

19.2.3.2.1 Physical Security

The surface nuclear confinement HVAC system shall be provided with physical barriers at air intakes, exhaust openings through walls and roof, and large ductwork to prevent any unauthorized intrusion into the protected or restricted access areas of the facility.

[10 CFR 73.51(d)(1) [DIRS 181969] requires a second permanent barrier which the facilities provide. This requirement ensures this boundary is complete relative to HVAC openings. DOE M 470.4-2 [DIRS 178562] Chapter IX.8 provides criteria for unattended openings.]

19.2.4 Miscellaneous Requirements

19.2.4.1 Inspection and Maintenance

The surface nuclear confinement HVAC system shall be designed and installed in such a manner so as to facilitate accessibility for maintenance, repair, replacement, and in-service inspection with consideration for space requirements under which these activities are performed.

[Derived engineering requirement needed to support maintenance activities that will ensure the system's continuous operation and readiness to perform its function.]

19.2.4.2 Testing and Balancing

The surface nuclear confinement HVAC system shall be tested and balanced to verify system performance. Test ports and other necessary instrumentation shall be provided at strategic locations of the system to test, collect data, and monitor system performance.

[Standard engineering practice dictates that the system will have some performance objectives requiring verification through test and analysis.]

19.2.4.3 Cask Cavity Exhaust

The HVAC systems within the Receipt Facility, IHF, and CRCFs shall be capable of exhausting the vent gases from the transportation cask cavity prior to cask lid removal. The surface nuclear confinement HVAC system in the WHF shall be capable of exhausting the vent gases from the transportation cask cavity and from gas sampling [through HEPA filters], prior to cask lid removal.

[For ALARA considerations it is prudent to vent the transportation cask cavity gas directly into the HVAC system. Engineering Study Transportation Cask Gas Sampling Requirements Analysis (BSC 2007 [DIRS 181530]) has determined the need for this requirement. Although the study only requires gas-sampling in the WHF, project direction is to have the capability in each nuclear facility (Slovic 2007 [DIRS 184156]).]

19.3 Conformance Verification

Table 19-1. Surface Nuclear Confinement HVAC Conformance Verification

Criterion		Preliminary Verification Method					
Number	**Description**	**N/A**	**Analysis**	**Exam**	**Demo**	**Review**	**Test**
19.2.1.1	Confinement System Design					X	
19.2.1.2	Confinement Zones					X	
19.2.1.3	Air Quality					X	
19.2.2.1	Single Failure					X	
19.2.2.2	Non-ITS SSCs Interaction with ITS SSCs					X	
19.2.2.3	ITS Power Supply					X	
19.2.2.4	Exhaust Monitoring					X	
19.2.3.1.1	Confinement HVAC Availability		X				
19.2.3.1.2	Confinement HVAC Supporting ITS Electrical Equipment					X	
19.2.3.2.1	Physical Security					X	
19.2.4.1	Inspection and Maintenance						X
19.2.4.2	Testing and Balancing						X
19.2.4.3	Cask Cavity Exhaust					X	

20 Surface Non-Confinement HVAC System

20.1 Overview

20.1.1 Introduction

The surface non-confinement HVAC system provides conditioned air for cooling, heating, and ventilation to meet the air quality standards required for the safety, health, and comfort of the personnel and maintains the environmental conditions suitable for the proper performance of SSCs in the non-confinement (radiologically clean) areas of the surface facilities. The system provides pressure differentials that are maintained slightly positive in the clean areas of the facilities relative to ambient and to minimize infiltration of unconditioned air and dust during the system operation.

20.1.2 System Classification

The surface non-confinement HVAC system has been classified as ITS. The portions of the surface non-confinement HVAC system that are ITS, are those systems that support the cooling of ITS electrical equipment and battery rooms.

The portions of the surface non-confinement HVAC system that are non-ITS, are those systems that do not support the cooling of ITS electrical equipment and battery rooms. The surface non-confinement HVAC system does not include SSCs that are ITWI.

[Preclosure NSDB (BSC 2008 [DIRS 184200]), Appendix A, Table A-1 specifically provides the classification of the system.]

20.2 Functional and Performance Requirements and Bases

20.2.1 Mission Requirements

20.2.1.1 Air Quality

The surface non-confinement HVAC system shall provide sufficient air quality and quantity in the BOP occupied facilities, and the non-confinement areas of the waste handling facilities.

[This requirement is considered necessary for defining the system functions.]

20.2.1.2 System Locations

Non-confinement HVAC system shall be provided for BOP occupied facilities, and the non-confinement areas of waste handling facilities to assure proper environmental conditions for personnel comfort and equipment operation.

[PO&PR (BSC 2008 [DIRS 185008]), Section 2.7.11.]

20.2.1.2.1 Air Contaminants

The surface non-confinement HVAC system shall provide engineering controls to meet compliance with the expected items in Tables Z-1, Z-2, and Z-3 of 29 CFR 1910.1000(a)-(c) and (e) [DIRS 182679].

[29 CFR 1910.1000 (a)-(c) and (e).]

20.2.2 General Requirements

20.2.2.1 Standby Equipment

The surface non-confinement HVAC system classified as ITS shall be provided with standby units, as required, to allow continuous system operation in the event of a failure of any of its components during normal operation, or during maintenance.

[Sound engineering practice dictates that the system have some performance objectives. These are considered sufficient.]

20.2.2.2 Non-ITS SSCs Interaction with ITS SSCs

The surface non-confinement HVAC systems shall be designed such that the interfaces between non-ITS SSCs and ITS SSCs that upon failure could prevent functions from being performed:

- have a probability of failure of less than 1E-04 over the preclosure period (as determined by PCSA),
- will not damage the ITS component if not screened out, or
- damage to the ITS SSC does not result in a doses in excess of the 10 CFR 63.111 [DIRS 180319] performance standard (as determined by PCSA).

The design of the interface shall include the dynamic loads and displacements produced by both sets of SSCs up to the first anchor point beyond the interface. Additionally, either:

- The collapse of the non-ITS SSC shall not cause it to strike an ITS SSC,
- The collapse of the non-ITS SSC shall not impair the integrity of the ITS SSC, or
- The non-ITS SSC shall be analyzed and designed to the same seismic DBGM as the ITS SSCs subjected to the potential unacceptable interaction.

Acceptable methods of isolating each non-ITS SSC with an adverse interaction include constraints, barriers, or relocation of the non-ITS SSC.

[At the discussion of isolation and anchor point boundary for the design is from NUREG-0800, Section 3.7.3, subsection II.8 (NRC 1989 [DIRS 165112]). Although the NUREG is not directly applicable to the repository as it is not a reactor plant, the repository does have both non-ITS and ITS SSCs that should have the same design considerations of the interactions. The specific criterion is contained in the PDC (BSC 2007 [DIRS 179641]), Section 6.1.10.2, for any non-ITS/ITS interactions. This requirement is commonly called the two-over-one requirement.]

20.2.2.3 ITS Power Supply

Power supply to any ITS surface non-confinement HVAC systems and associated instruments and controls shall be provided by the ITS power subsystem.

[This requirement is to ensure that those ITS functions of the HVAC system remain operable on loss of primary electrical power. The non-confinement ITS HVAC system is applicable to the EDGF. Emergency changed to ITS in accordance with Repository System Codes (BSC 2007 [DIRS 184183]).]

20.2.3 Safety and Protection Requirements

20.2.3.1 NSDB Requirements

20.2.3.1.1 HVAC Availability

Portions of the surface non-confinement HVAC system that support the cooling of ITS electrical equipment and battery rooms in the EDGF shall be designed to support the ITS electrical function (safety function).

- The mean conditional probability of failure of the portions of the surface non-confinement HVAC system that support the cooling of ITS electrical equipment and battery rooms in the EDGF shall be less than or equal to 1.0×10^{-02} per ITS electrical train.

[Preclosure NSDB (BSC 2008 [DIRS 184200]), SB.VN.01.]

20.2.3.2 Security Requirements

20.2.3.2.1 Physical Security

The surface non-confinement HVAC system shall be provided with physical barriers at air intakes, exhaust openings through walls and roof, and large ductwork to prevent any unauthorized intrusion into the protected or restricted access areas of the facility.

[10 CFR 73.51(d)(1) [DIRS 181969] requires a second permanent barrier which the facilities provide. This requirement ensures this boundary is complete relative to HVAC openings. DOE M 470.4-2 [DIRS 178562] Chapter IX.8 provides criteria for unattended openings.]

20.2.4 Miscellaneous Requirements

20.2.4.1 Testing and Balancing

The surface non-confinement HVAC system shall be provided with equipment/instruments to test and balance the system, or provide connections for this equipment, to verify system performance.

[Proper functioning of the system should be verifiable. The equipment/instruments provided in the HVAC system will ensure that system performance can be verified.]

20.2.4.2 Inspection and Maintenance

The surface non-confinement HVAC system shall be designed and installed in such a manner so as to facilitate accessibility for maintenance, repair, replacement, and in-service inspection with consideration for space requirements under which these activities are performed.

[Derived engineering requirement needed to support maintenance activities that will ensure the system's continuous operation and readiness to perform its function.]

20.3 Conformance Verification

Table 20-1. Surface Non-Confinement HVAC System Conformance Verification

Criterion		Preliminary Verification Method					
Number	Description	N/A	Analysis	Exam	Demo	Review	Test
20.2.1.1	Air Quality					X	
20.2.1.2	System Locations					X	
20.2.1.2.1	Air Contaminants						
20.2.2.1	Standby Equipment					X	
20.2.2.2	Non-ITS SSCs Interaction with ITS SSCs		X				
20.2.2.3	ITS Power Supply					X	
20.2.3.1.1	HVAC Availability		X				
20.2.3.2.1	Physical Security					X	
20.2.4.1	Testing and Balancing						X
20.2.4.2	Inspection and Maintenance					X	

21 Plant Heating And Cooling System

21.1 Overview

21.1.1 Introduction

The plant heating and cooling system is a centralized system comprised of the chilled water cooling and hot water heating subsystems that provide chilled water and hot water to various facilities for HVAC and/or process use.

21.1.2 System Classification

The plant heating and cooling system has been classified as non-ITS and does not include SSCs that are ITWI.

[Although the Preclosure NSDB (BSC 2008 [DIRS 184200]) does not specifically list this system, it is part of the Plant Services System in Appendix A, Table A-1, which specifically provides the classification of the system.]

21.2 Functional and Performance Requirements and Bases

21.2.1 Mission Requirements

21.2.1.1 Provide Chilled Water and Hot Water

The plant heating and cooling system shall provide chilled water and hot water to the HVAC equipment requiring chilled or hot water.

[This requirement is considered necessary for defining the system functions. This is not provided by regulation of codes and standards.]

21.2.2 General Requirements

21.2.2.1 Standby Equipment

The plant heating and cooling system shall be provided with the sufficient capacity or standby equipment to ensure the reliability and availability of the system to perform its function.

[Sound engineering practice dictates that the system have some performance objectives. These are considered sufficient.]

21.2.2.2 Low-Temperature System Classification

The hot water heating boiler shall be classified as a low temperature water system with an operating temperature less than 250°F and operating pressure not to exceed 160 psi.

[The low temperature water system, as defined in ASHRAE HVAC System and Equipment Handbook (ASHRAE 2004 [DIRS 171799]) Chapter 12, are generally used for heating spaces through air handling unit heating coils, reheat coils, or though unit heaters.]

21.2.3 Safety and Protection Requirements

21.2.3.1 Criticality Protection

The plant heating and cooling system distribution piping shall be designed and located outside of the moderator control area to prevent and/or mitigate any credible criticality event from occurring.

[Derived from 10 CFR 63.112(e)(6) [DIRS 180319] to prevent and control criticality. This criterion also partially satisfies PO&PR (BSC 2008 [DIRS 185008]), Section 2.6.2.]

21.2.3.2 Personnel Safety

The plant heating and cooling system shall be designed to include provision for the protection of the workers during the installation, maintenance, or replacement of plant heating and cooling SSCs.

[Although the requirement source has been removed from the contract, it provided the basis for this functional requirement that should still be applied to the system.]

21.2.4 Miscellaneous Requirements

There are no identified requirements for this section. As requirements are identified in the future, they will be added.

21.3 Conformance Verification

Table 21-1. Plant Heating and Cooling System Conformance Verification

Criterion		Preliminary Verification Method					
Number	Description	N/A	Analysis	Exam	Demo	Review	Test
21.2.1.1	Provide Chilled Water and Hot Water					X	
21.2.2.2.1	Standby Equipment					X	
21.2.2.2.2	Low-Temperature System Classification					X	
21.2.3.1	Criticality Protection					X	
21.2.3.2	Personnel Safety					X	

22 Subsurface Ventilation System

22.1 Overview

22.1.1 Introduction

The subsurface ventilation system provides for the health, safety, and comfort of personnel in the subsurface and thermal management of waste packages in the emplacement drifts. The subsurface ventilation system consists of the development ventilation and the emplacement ventilation , which includes the waste package emplacement, post-emplacement, and closure ventilation. The development ventilation supports the development of the subsurface repository. The emplacement ventilation regulates the temperature in the underground areas used for the transport, emplacement, and monitoring of SNF and HLW contained in waste packages during preclosure, and may also support waste retrieval operations. The subsurface development ventilation incorporates a forced (supply) ventilation system and the emplacement ventilation incorporates an exhaust system to ensure any leakage is in the direction of the emplacement area.

22.1.2 System Classification

The subsurface ventilation system has been classified as non-ITS. The subsurface ventilation system does not include SSCs that are ITWI.

[Preclosure NSDB (BSC 2008 [DIRS 184200]), Appendix A, Table A-1 specifically provides the classification of the system.]

22.2 Functional and Performance Requirements and Bases

22.2.1 Mission Requirements

22.2.1.1 Ventilate Waste Packages

Subsurface ventilation shall be provided to any emplacement drifts containing loaded waste packages. The subsurface ventilation in the emplacement drifts shall be separate from the subsurface ventilation for development.

[BCP YMP-2006-053 [DIRS 177483], Block 11, Page 7 of 1159.]

22.2.1.2 Emplacement Drift Ambient Temperature

The subsurface ventilation system shall maintain underground air temperatures in the emplacement drift general areas at 50°C (122°F) or below, during normal emplacement or retrieval operations.

[To ensure acceptable underground air temperatures for emplacement equipment or waste package retrieval operations. The Electrical Engineering Handbook states the maximum average operational temperature range for most commercial chips is 65°C (149°F) to 85°C (185°F) (Dorf 1993 [DIRS 125707], p. 786). The 50°C (122°F) value was chosen to provide a safety margin for protection from potential localized fluctuations in temperature near the waste packages. The 50°C (122°F) value only applies at the working end of a drift and not to the non-working (fully loaded) drift.]

22.2.1.3 Emplacement Drift Wall Temperature

The subsurface ventilation system shall maintain an emplacement drift wall temperature during normal or off-normal operations of less than 200°C (392°F) prior to permanent closure.

[IED Emplacement Drift Configuration and Environment, 800-IED-MGR0-00501-000-00B (BSC 2007 [DIRS 180412]), This requirement supports repository thermal management goals. Postclosure Modeling and Analyses Design Parameters (BSC 2008 [DIRS 183627]), Table 1, item # 06-02 provides the 200°C limit to avoid possible adverse conditions (e.g., mineralogical transitions, rock weakening, etc.). CO Letter No. 08-007 (Peterson 2008 [DIRS 184939]) provides for greater flexibility in the receipt and processing of the incoming commercial waste stream. CBCN010 text edited slightly for clarity.]

22.2.1.4 Subsurface Air Quality

The subsurface ventilation system shall provide sufficient quantity of fresh air to the underground work areas to prevent dangerous or harmful accumulation of dust, fumes, mists, vapors, or gases. A minimum of 200 cubic ft per minute of fresh air shall be supplied for each person underground. The linear velocity of airflow in the access

mains, shafts, and all other underground work areas shall be at least 30 ft per minute.

[Although 29 CFR 1926.800(k) [DIRS 182683] applies to construction and does not apply to operational facilities, the criteria are considered appropriate for underground maintenance activities.]

22.2.1.5 Ventilation Design Comfort

The subsurface ventilation system shall limit the subsurface temperature in areas of continuous human access to reduce heat stress and prevent heat strain.

[Although the requirement source has been removed from the contract, it provided the basis for this functional requirement that should still be applied to the system.]

22.2.1.6 Ventilation System Design

The subsurface ventilation system shall be designed to ensure the direction of any potential air leakage through the isolation barriers will be from the development side to the emplacement side of the subsurface repository. The system shall maintain the air pressure on the development side at least 0.1 in. of water gauge greater than the air pressure on the emplacement side.

[DOE-HDBK-1169-2003 [DIRS 167097].]

22.2.1.7 Ventilation System Airflow

The subsurface ventilation system shall provide at least 100 cubic ft of air per minute for each brake horsepower of the diesel engine (when used in underground work), in addition to the ventilation air requirements for each person.

[Although 29 CFR 1926.800(k) [DIRS 182683] applies to construction and does not apply to operational facilities, the criteria are considered appropriate for underground maintenance activities.]

22.2.1.8 Service Life

The subsurface ventilation system shall begin operating in support of initial waste package emplacement and shall continue to operate for a minimum of 50 years after final waste package emplacement. The system design shall provide for maintenance to extend the systems' initial service life.

[MGR-RD [DIRS 177491], Section 3.2.12.F provided a reference to 50 years after the first emplaced waste package. The Postclosure Modeling and Analyses Design Parameters (BSC 2008 [DIRS 183627]), Table 1, item # 06-01 expanded this period. The additional ventilation required, that defines the duration of the preclosure period for the subsurface facilities as 100 years, is described in Section 2.2.2.7.]

22.2.1.9 HLW Glass Temperatures

The subsurface ventilation system shall contribute to maintaining the maximum HLW glass temperature to less than 400 °C.

[Postclosure Modeling and Analyses Design Parameters (BSC 2008 [DIRS 183627]), Table 1, item # 06-05.]

22.2.1.10 Waste Package Temperature Limits

The subsurface ventilation system shall be designed to ensure the waste package surface temperature is kept below 300 °C for the first 500 years and below 200 °C for the next 9,500 years to eliminate postclosure issues (i.e. phase stability).

[Postclosure Modeling and Analyses Design Parameters (BSC 2008 [DIRS 183627]), Table 1, item # 06-03.]

22.2.1.11 Cladding Temperature Limits

The subsurface ventilation system shall be designed to ensure the maximum temperature limit for the CSNF cladding upon emplacement not exceed 350 °C (to prevent damage from creep or hydride reorientation).

[Postclosure Modeling and Analyses Design Parameters (BSC 2008 [DIRS 183627]), Table 1, item # 06-04.]

22.2.2 General Requirements

22.2.2.1 Development and Emplacement Separation

The subsurface emplacement ventilation for the emplacement drifts and the development ventilation area shall be separated by fire rated barriers, solid bulkhead with a closed personnel access door that will have S&S restricted access controls. The barriers are required to separate areas of low potential contamination from areas of high potential contamination.

[DOE-HDBK-1169-2003 [DIRS 167097].]

22.2.2.2 Operational Life

The subsurface emplacement ventilation shall not preclude permanent closure of the repository for up to 300 years after initial waste package emplacement. The system design may include provisions for extending the system's service life.

[MGR-RD [DIRS 177491], Section 3.2.12.B and CRD (DOE 2007 [DIRS 182960]), Section 3.5D.]

22.2.2.3 Emplacement Drift Ventilation

During the preclosure phase, the nominal inlet airflow rate per emplacement drift shall be 15 m^3/sec. The range of airflow rate in a given drift shall be 15 m^3/sec ± 2 m^3/sec, based on integrated ventilation efficiency and drift length.

[Postclosure Modeling and Analyses Design Parameters (BSC 2008 [DIRS 183627]), Table 1, item # 06-06.]

22.2.3 Safety and Protection Requirements

22.2.3.1 Radon Protection

The subsurface ventilation system shall be provided with means to monitor radon and ionizing radiation and shall be capable of controlling radon daughter concentrations to levels that will not exceed worker regulatory exposure limits.

[Although the DOE requirement source has been removed from the contract, it provided the basis for this functional requirement that should still be applied to the system.]

22.2.3.2 Hazardous Emission

The subsurface ventilation system shall control non-radioactive emissions. The concentrations of hazardous substances produced in the course of development work shall not exceed the exposure limits specified in *TLVs® and BEIs®, Based on the Documentation of the Threshold Limit Values for Chemical Substances and Physical Agents & Biological Exposure Indices* (ACGIH 2007 [DIRS 184625]).

[Although the requirement source has been removed from the contract, it provided the basis for this functional requirement that should still be applied to the system. Although the previous source document specifies using the latest version of the ACGIH standard, only the 2007 version is currently available to the contractor. This version has changes specifically addressing silica standards that the repository will incorporate.]

22.2.3.3 Fire Protection

The subsurface ventilation system shall conform to the requirements of the FHA and function in conjunction with the specified fire rated barriers, fire detection, and fire suppression system for the protection of the workers and to limit the spread of fires.

[This protection statement is necessary to emphasize the requirements needed for the protection of employees.]

22.2.3.4 Explosion Protection

The subsurface ventilation system shall conform to the requirements of the FHA for controls necessary for explosion protection.

[This protection statement is necessary to emphasize the requirements needed for the protection of employees.]

22.2.3.5 Silica Protection

The subsurface ventilation system shall be designed and operated to limit and control personnel exposures to crystalline silica (including quartz, cristobalite, and tridymite), consistent with the risk.

[Derived engineering requirement based on a history on silica generation during excavations that makes protection during operations necessary.]

22.2.3.6 Hazard Category

The subsurface ventilation system shall be designed and operated consistent with the facility hazard category.

[DOE O 420.1A [DIRS 159450], Contractor Requirement 4.1.1. The location of the subsurface ventilation system may be classified as Hazard Category 1, 2, 3, and industrial facilities.]

22.2.3.7 Safeguards and Security

The subsurface ventilation system shall be provided with adequate safeguard and security to comply with physical security criteria applicable to the repository. Physical barriers shall be provided to prevent any unauthorized intrusion by personnel or members of the public into the protected or restricted access areas of the facility. As a minimum, unauthorized access into emplacement drifts shall not be possible via the subsurface ventilation system.

[Derived requirement from 10 CFR 73.51 (d)(1) [DIRS 181969] and DOE M 470.4-2 [DIRS 178562].]

22.2.4 Miscellaneous Requirements

22.2.4.1 Testing and Balancing

Instrumentation, test ports for testing and balancing, and other necessary measuring instruments shall be provided at strategic locations of the system to test, collect data, and monitor system performance.

[This function is necessary to verify the proper performance of the system.]

22.2.4.2 Inspection and Maintenance

The subsurface ventilation system shall be provided with adequate spares and installed in such a manner so as to facilitate accessibility for maintenance, repair, replacement, and in-service inspection with consideration for space requirements under which these activities are performed.

[All systems requires maintenance. This derived requirement ensures that the design will provide the function.]

22.3 Conformance Verification

Table 22-1. Subsurface Ventilation System Conformance Verification

Criterion		Preliminary Verification Method					
Number	Description	N/A	Analysis	Exam	Demo	Review	Test
22.2.1.1	Ventilate Waste Packages					X	
22.2.1.2	Emplacement Drift Ambient Temperature		X				
22.2.1.3	Emplacement Drift Wall Temperature		X				
22.2.1.4	Subsurface Air Quality		X				
22.2.1.5	Ventilation Design Comfort		X				
22.2.1.6	Ventilation System Design					X	
22.2.1.7	Ventilation System Airflow		X				
22.2.1.8	Service Life		X				
22.2.1.9	HLW Glass Temperatures		X				
22.2.1.10	Waste Package Temperature Limits		X				
22.2.1.11	Cladding Temperature Limits		X				
22.2.2.1	Development and Emplacement Separation					X	
22.2.2.2	Operational Life		X				
22.2.2.3	Emplacement Drift Ventilation				X		
22.2.3.1	Radon Protection					X	
22.2.3.2	Hazardous Emission					X	
22.2.3.3	Fire Protection					X	
22.2.3.4	Explosion Protection					X	
22.2.3.5	Silica Protection					X	
22.2.3.6	Hazard Category		X				
22.2.3.7	Safeguards and Security					X	
22.2.4.1	Testing and Balancing					X	
22.2.4.2	Inspection and Maintenance					X	

23 Safeguards and Security System

23.1 Overview

23.1.1 Introduction

The S&S system provides security measures for the protection of SNM and HLW against sabotage, theft, and diversion; protection of classified matter against unauthorized access; and protective measures for site personnel and property. Levels of protection appropriate to particular S&S interests are to be provided in a graded fashion in accordance with the potential risks. To ensure that this protection objective will be met, the design and placement of the physical protection features at the GROA will be determined by meeting the baseline security requirements of 10 CFR 63.21 [DIRS 180319] and 10 CFR 73.51 [DIRS 181969], as well as NRC interim compensatory measures. They will also be determined by risk evaluations, which include vulnerability analyses and threat assessments. The physical protection system provided by the S&S systems include the following:

- Appropriately staffed, trained, qualified and equipped security organization
- Access control subsystem
- Physical barrier subsystem
- Intrusion, detection, surveillance, and alarm subsystems (including special illumination)
- Communication subsystems
- Equipment operability and compensatory measures
- Contingency and response plans

The physical protection system works with the various nuclear handling and BOP facilities to protect DOE security interests from theft or diversion of SNF and HLW, radiological sabotage, and other hostile acts, which may cause unacceptable adverse impacts on national security or on the health and safety of employees, the public, or the environment.

23.1.2 System Classification

The safeguards and security system has been classified as non-ITS. The safeguards and security system does not include SSCs that are ITWI.

[Preclosure NSDB (BSC 2008 [DIRS 184200]), Appendix A, Table A-1 specifically provides the classification of the system.]

23.2 Functional and Performance Requirements and Bases

23.2.1 Mission Requirements

23.2.1.1 SNF and HLW Custody

The S&S system shall provide for the physical protection of SNF and HLW while in the possession or custody of the repository, in accordance with all applicable S&S requirements. The repository shall ensure the physical protection of SNF and HLW received at the repository for disposal in accordance with the:

- safeguards and security requirements in 10 CFR 63.21(b)(3) [DIRS 180319],
- applicable material control and accounting provisions of 10 CFR 63.78,
- safeguards information protection provisions in 10 CFR 73.21 [DIRS 181969], and
- any applicable interim compensatory measures issued by the NRC.

[CRD (DOE 2007 [DIRS 182960]), Section 3.1.2G and 3.5E, and the MGR-RD [DIRS 177491], Sections 3.1.1.U, 3.1.1.V, 3.1.1.W, and 3.1.1.X.]

23.2.1.2 Protected Area

The repository shall store SNF and HLW only within a protected area. The physical protection system shall control areas within which authorized activities and conditions are permitted. These areas include the protected area at the GROA where HLW and SNF will be handled and stored, protected areas at the subsurface ventilation shafts, and owner controlled areas (BOD facilities) outside of the protected areas. The system shall channel persons and vehicles to or from entry and exit control points. The barriers shall delay or deny unauthorized penetration attempts as well as protect against the unauthorized removal of material.

[10 CFR 73.51(b) and (d) [DIRS 181969] and DOE M 470.4-2 [DIRS 178562], Chapter IV.2 and Chapter VIII.]

23.2.1.3 Safeguards & Security Interests

The S&S system shall provide protection for S&S interests including but not limited to classified matter, SNM and other nuclear materials, secure communications centers, sensitive compartmented information facilities, automated data processing centers, facilities storing and transmitting classified information, and vital equipment as directed by the S&S organization.

[10 CFR 73.21(a) [DIRS 181969] and DOE M 470.4-2 [DIRS 178562] Chapter I.2.]

23.2.1.4 Permanent Barriers

The S&S system shall install permanent physical barriers, except during construction or transient activities, when temporary barriers may be erected, to control, deny, impede, or delay unauthorized access into all security areas and delineate DOE-designated security areas by means of separate and distinct permanent barriers. The requirement for barriers at property protection areas shall be locally implemented and included in security plans.

[DOE M 470.4-2 [DIRS 178562], Chapter IX. PO&PR (BSC 2008 [DIRS 185008]), Section 3.1.5.]

23.2.1.5 Human Intrusion

The S&S system shall provide physical barriers to human intrusion to support physical protection at the repository site prior to permanent closure.

[DOE M 470.4-2 [DIRS 178562], Chapter IX.]

23.2.1.6 Protection Strategy

The S&S system shall develop physical protection measures based on a protection strategy that specifically addresses the S&S interests identified by the S&S organization.

[DOE M 470.4-2 [DIRS 178562], Chapter I.2.]

23.2.1.7 Graded Protection Program

The S&S system shall provide a graded physical protection program to S&S interests in a cost-effective manner consistent with potential threats as directed by the S&S organization.

[DOE M 470.4-2 [DIRS 178562], Chapter I.3.]

23.2.1.8 Communications Control

The S&S system design shall provide internal communications and control capabilities to maintain nuclear material inventories, control emergency response, and support S&S requirements.

[MGR-RD [DIRS 177491], Section 3.1.1.V allows deriving a requirement for providing communications for maintaining material control and accountability.]

23.2.1.9 SNF/HLW Accountability

The S&S system will provide physical inventory and records documenting conformance verification, accountability, and traceability of the SNF and HLW from initial acceptance to final closure of the repository. The system shall incorporate checks and balances sufficient to detect falsifications, and be adequate to thwart attempts by insiders acting alone or in collusion to divert SNF or HLW. This documentation will be protected from unauthorized access.

[10 CFR 63.78 [DIRS 180319] and MGR-RD [DIRS 177491], Section 3.1.1.V, allows deriving a requirement for documenting verification for material control and accountability.]

23.2.1.10 Material Control

The S&S system shall provide an electronic system to record the receipt, inventory (including location), disposal, acquisition, and transfer of all special nuclear material with quantities as specified in 10 CFR 74.13(a)(1) [DIRS 181976]. The system shall record as a minimum the name of the shipper of the material to the repository, the estimated quantity of radioactive material per item (including SNM in SNF and reactor-related greater than Class C waste), item identification and seal number, storage location, onsite movements of each fuel assembly or storage canister, materials identified as having become separated from damaged fuel assemblies, and ultimate disposal. The system shall record quantities, radionuclide characteristics, heat generation rate, history, and other required

data.

[10 CFR 63.78 [DIRS 180319], 10 CFR 72.72 (a) [DIRS 181968]. These material control and accountability records for spent fuel and reactor-related greater than Class C waste or for SNF, HLW, and reactor-related greater than Class C waste the repository must be retained for as long as the material is stored and for a period of 5 years after the material is disposed of. These records are not permanent repository information that require lifetime storage.]

23.2.1.11 Computer Based Format

The S&S material control and accountability (electronic) system shall be capable of completing in computer-readable format for submittal to the NRC a material balance report, a physical inventory listing report and a nuclear material transition in accordance with instructions (NUREG/BR-0006 and NMMSS Report D-24, "Personal Computer Data Input for NRC Licenses" [DIRS 174649]).

[As referenced by 10 CFR 63.78 [DIRS 180319], 10 CFR 72.76 (a) and 72.78 (a) [DIRS 181968]. These system-generated reports shall provide information concerning the special nuclear material possessed, received, transferred, disposed of, or lost, and must be generated within 60 days of the beginning of the physical inventory required by 10 CFR 72.72(b). Although also referenced by 10 CFR 63.78, 10 CFR 72.74 is not a design requirements document, but operational in nature and is not included here.]

23.2.1.12 Electronic Information

The S&S system shall be capable of providing physical protection system reports, by electronic submission, for example, electronic information exchange, or CD-ROM. Electronic submissions must be made in a manner that enables the NRC to receive, read, authenticate, distribute, and archive the submission, and process and retrieve it a single page at a time.

[10 CFR 73.4 [DIRS 181969].]

23.2.1.13 Design Basis Threat Strategy

The S&S system shall establish and maintain or make arrangements for a physical protection system that will have as its objective to provide high assurance that activities involving SNM are not inimical to the common defense and security, and do not constitute an unreasonable risk to the public health and safety. The physical protection system shall be designed to protect against the design basis threats of theft or diversion of strategic SNM and radiological sabotage as stated in 10 CFR 73.1(a) [DIRS 181969].

[10 CFR 73 [DIRS 181969].]

23.2.1.14 Redundancy and Diversity Capabilities

The S&S system shall establish and maintain, or arrange for, a physical protection system that provides the performance capabilities for protection unless otherwise authorized by the NRC and is designed with sufficient redundancy and diversity to ensure maintenance of the capabilities.

[10 CFR 73 [DIRS 181969].]

23.2.1.15 Documentation Protection

The S&S system shall protect the following specific types of information, documents, and reports that may be included within the system including information not otherwise classified as Restricted Data or National Security Information relating to the protection of facilities that possess formula quantities of strategic SNM, and power reactors. Specifically:

1. Site-specific drawings, diagrams, sketches, or maps that substantially represent the final design features of the physical protection system.
2. Details of alarm system layouts showing the location of intrusion detection devices, alarm assessment equipment, alarm system wiring, emergency power sources, and duress alarms.
3. Details of the on-site and off-site communications systems that are used for security purposes.
4. Documents and other matter that contain lists or locations of certain safety-related equipment explicitly identified in the documents as vital for purposes of physical protection, as contained in physical security plans, safeguards contingency plans, or plant specific safeguards analyses for production or utilization facilities.

[10 CFR 73.21 (b)(1) [DIRS 181969].]

23.2.1.16 Telecommunication Protection

The S&S system shall provide protected telecommunications circuits (including facsimile), approved by the NRC, to transmit safeguards information (except under emergency or extraordinary conditions).

[10 CFR 73.21(g)(3) [DIRS 181969]. Physical security events required to be reported pursuant to 10 CFR 73.71 are considered to be extraordinary conditions.]

23.2.1.17 Access to Standoff Distance

Measures shall be established to prevent and detect unauthorized train and other vehicle entry into areas located within the standoff distance for a design basis bomb.

[PO&PR (BSC 2008 [DIRS 185008]), Sections 3.1.6 and 3.1.7.]

23.2.1.18 Checkpoint Surveillance

Checkpoints shall be equipped with camera surveillance that permits observation from a remote location.

[PO&PR (BSC 2008 [DIRS 185008]), Section 3.1.8.]

23.2.2 General Requirements

23.2.2.1 Central Alarm Station

The S&S system shall provide for a primary CAS in the CCCF and the capability to provide alarm indication in one additional continually staffed location. The CAS must be located within the protected area; have bullet resisting walls, doors, ceiling, and floor; and the interior of the station must not be visible from outside the protected area. Regarding alarm monitoring, the redundant location need only provide a summary indication that an alarm has been generated.

[10 CFR 73.51(d)(3) [DIRS 181969] and DOE M 470.4-2 [DIRS 178562] Chapter V.2, requires a primary alarm station that is named the CAS. BCP YMP-2004-072 [DIRS 168721], Attachment C.]

23.2.2.2 Secondary Alarm Station

To provide system redundancy, the repository shall be provided with an alternate secondary alarm station (SAS) that shall be physically separated from the primary central alarm station (CAS) and located close to the repository access point. The SAS shall monitor and alarm the same security alarming functions provided by the primary CAS and be provided with the same physical construction attributes. The SAS shall be capable of initiating a response to an alarm in the event that the CAS is unable to perform its intended function. The S&S shall outfit the SAS such that a response can be initiated in the event a CAS is unable to perform its intended function. The SAS need not be fully redundant to the CAS, but must be capable of providing full command and control in response to safeguards and security incidents.

[10 CFR 73.51(d)(3) [DIRS 181969] and DOE M 470.4-2 [DIRS 178562] Chapter V.2 calls for an additional continually staffed location for alarm reporting, which is designated as alternate alarm station.]

23.2.2.3 Continuous Surveillance

The S&S system shall provide continual surveillance of the perimeter of the protected area and protect the perimeter by an active intrusion alarm system which is capable of detecting and accessing unauthorized access or penetrations through the isolation zone and that is monitored in a continually staffed primary alarm station and in one redundant continually staffed location. The redundant location need only provide a summary indication that an alarm has been generated. A timely means for assessment of alarms shall also be provided.

[10 CFR 73.51(d)(3) [DIRS 181969]. Regarding alarm monitoring, the redundant location need only provide a summary indication that an alarm has been generated.]

23.2.2.4 Protected Area Access

The S&S system shall grant access to the protected area only to individuals who are authorized to enter the protected area.

[10 CFR 73.51 (b)(2)(ii) [DIRS 181969].]

23.2.2.5 Intrusion Detection

The S&S system shall detect and assess unauthorized penetration of, or activities within, the protected area.

[10 CFR 73.51 (b)(2)(iii) [DIRS 181969].]

23.2.2.6 Illumination

The safeguards and security system shall supply sufficient illumination to permit the adequate assessment of unauthorized penetrations or activities within the protected area. Adequate illumination shall be provided to permit or assist in the detection and assessment of adversaries, reveal unauthorized persons, and permit the examination of credentials and vehicles at pedestrian and vehicular entrances.

[10 CFR 73.51 (d)(2) [DIRS 181969].]

23.2.2.7 Safeguards & Security Barriers

The S&S system shall store SNF and HLW only within a protected area so that access to this material requires passage through or penetration of two physical barriers, one barrier at the perimeter of the protected area and one barrier offering substantial penetration resistance. The physical barrier at the perimeter of the protected area shall be:

1. Fences constructed of No. 11 American wire gauge, or heavier wire fabric, topped by three strands or more of barbed wire or similar material on brackets angled inward or outward between 30[deg] and 45[deg] from the vertical, with an overall height of not less than 8 ft, including the barbed topping
2. Building walls, ceilings and floors constructed of stone, brick, cinder block, concrete, steel or comparable materials (openings in which are secured by grates, doors, or covers of construction and fastening of sufficient strength such that the integrity of the wall is not lessened by any opening), or walls of similar construction, not part of a building, provided with a barbed topping of a height of not less than 8 ft
3. Any other physical obstruction constructed in a manner and of materials suitable for the purpose for which the obstruction is intended.
4. Isolation zones, typically 20 ft wide each, on both sides of this barrier, must be provided to facilitate assessment.

[10 CFR 73.51 (d)(1) [DIRS 181969]. The barrier offering substantial resistance to penetration may be provided by an approved storage cask or building walls such as those of a fuel storage building.]

23.2.2.8 Not Used

23.2.2.9 Not Used

23.2.2.10 Intrusion Detection System

The S&S system shall provide IDS and/or provide remote visual observations to ensure breaches in the security area boundaries (for those S&S interests under IDS protection) are detected and alarms are annunciated.

[DOE M 470.4-2 [DIRS 178562], Chapter VII.]

23.2.2.11 Perimeter Intrusion Detection

The S&S system shall ensure perimeter intrusion detection and alarm systems protecting Category I and II quantities of SNM use multilayered, complementary detection sensors. The perimeter intrusion detection and alarm system shall separate the protected area from the owner controlled area, and ventilation shafts for the subsurface from outside areas. The S&S system shall provide access (roads, etc) around the inside perimeter of the protected areas at the GROA and subsurface ventilation shafts for patrol of the perimeter intrusion, detection and alarm system. The location of the perimeter intrusion detection and alarm system will be determined in part by a vulnerability assessment report. Vital areas must have an intrusion detection system.

[10 CFR 73.51 (d)(3) [DIRS 181969] and DOE M 470.4-2 [DIRS 178562], Chapter VII.]

23.2.2.12 Monitoring IDS

The S&S system shall ensure IDS and/or visual observations by protective force personnel are monitored at a CAS to detect unauthorized entry and/or presence in security areas for protecting Category I and II quantities of SNM and other high-consequence assets.

[DOE M 470.4-2 [DIRS 178562], Chapter II.3, Chapter V.2, Chapter VII.1.b, and Chapter VII.1.c.]

23.2.2.13 IDS Display

The S&S system shall provide and display IDS and access control alarms information and/or remote visual observations such that they may be effectively assessed by protective force personnel to determine the cause of the alarms and detect unauthorized entry and/or presence in security areas that require protection.

[DOE M 470.4-2 [DIRS 178562], Chapter VII.1.e and VII.1.f, Chapter VII.4.b, Chapter VII.4.c, and Chapter VII.4.d.]

23.2.2.14 IDS Alarms

The S&S system shall ensure intrusion and access control system alarms protecting Category I and II SNM annunciate at both a CAS and an SAS.

[DOE M 470.4-2 [DIRS 178562], Chapter V.2 and Chapter VII.]

23.2.2.15 Deleted

[This requirement was combined into Criterion 23.2.2.2.]

23.2.2.16 Voice Communications

The S&S system shall ensure voice communications systems used for security purposes are operable and provide intelligible voice communications in all security areas for all modes of operation. The communications to a designated response force shall be timely.

[DOE M 470.4-2 [DIRS 178562], Chapter XII and 10 CFR 73.51(b)(2)(iv) [DIRS 181969].]

23.2.2.17 Tamper Indication

The S&S system shall ensure that all intrusion detection systems and supporting subsystems (assessment system components, sensors, and communication systems protecting Category I and II SNM) and access control systems must be tamper indicating, with line supervision to both the CAS and SAS, and provide graded protection from tampering and substitution.

[10 CFR 73.51(d)(11) [DIRS 181969] and DOE M 470.4-2 [DIRS 178562] Chapter V.3.a, Chapter VI.3.a & b and Chapter VII.4.a.]

23.2.2.18 Closed Circuit TV

The S&S system shall ensure closed circuit television used as the primary assessment tool uses fixed cameras and provides a clear image for assessment. Pan-tilt-and-zoom cameras may be used for surveillance.

[DOE M 470.4-2 [DIRS 178562], Chapter V.3.]

23.2.2.19 Alarm Assessment

The S&S system shall ensure videos recorded from assessment cameras capture information necessary for alarm assessment.

[DOE M 470.4-2[DIRS 178562], Chapter V.3.a.]

23.2.2.20 Secure Storage

The S&S system shall provide secure storage for S&S interests, such as vaults, vault-type rooms, vault-type-room complexes, and/or GSA-approved security containers.

[DOE M 470.4-2 [DIRS 178562], Chapter VII.2.d, and Chapters XI.]

23.2.2.21 Signage

The S&S system shall post signs prohibiting trespassing around the perimeter and at each entrance to a security area except when one security area is located within a larger posted security area with information on the Atomic Weapons and Special Nuclear Materials Rewards Act [DIRS 177498]; prohibited and controlled articles; entry and exit inspections of vehicles, packages, or persons; and trespassing.

[DOE M 470.4-2 [DIRS 178562], Chapter IV.3.c and XIV.]

23.2.2.22 Automated Data Processing System

An automated data processing system shall be provided for safeguards information that is self-contained within the repository facility and requires the use of an entry code for access to stored information.

[10 CFR 73.21 (h) [DIRS 181969]. Other systems may be used if approved for security by the NRC.]

23.2.2.23 Interim Compensatory Measures

The S&S system shall employ timely compensatory measures, including any interim compensatory measures issued by the NRC, after discovery of inoperable systems or components to assure that the effectiveness of meeting performance requirements is not compromised.

[CRD (DOE 2007 [DIRS 182960]), Section 3.5E, as flowed down through the MGR-RD [DIRS 177491], Section 3.1.1.X.]

23.2.2.24 Backup Electrical and UPS Power

Backup electrical power and a UPS shall be provided to the S&S systems (including thematerial control and accountability database equipment), as required, to assure the continuity of the systems performance requirements in the event of the loss of off-site power supply.

DOE M 470.4-2 Chapter VII. 6.c [DIRS 178562.]

23.2.2.25 Electronic Surveillance

Establish and maintain electronic surveillance systems in sensitive areas (e.g., wet handling, transfer locations) and a system for controlling personnel access to nuclear materials; nuclear materials accountability, inventory data; data-generating equipment, and other items or equipment where misuse could compromise the safeguards system for the repository.

[10 CFR 73.51(d)(3) [DIRS 181969] and DOE M 470.4-2 [DIRS 178562] Chapter V. 1.a.(5) and 3.a.]

23.2.3 Safety and Protection Requirements

23.2.3.1 Hazard Analysis

The hazard analyses for this system are incomplete, but are assumed to be applicable. This section will be updated for each hazard with information on applicability or non-applicability, mitigating or fail-safe performance requirements, environments, monitoring, alarms, and interfaces.

[Additional information is presented in Preliminary Hazards Analysis for License Application Study (BSC 2004 [DIRS 167313]).]

23.2.3.2 Combustion Distances

A 33 ft separation shall be maintained between the surface facilities and combustible vegetation.

[This requirement satisfies the Site Fire Hazard Analysis (BSC 2007 [DIRS 181993]).]

23.2.4 Miscellaneous Requirements

23.2.4.1 Cost Control

S&S equipment and systems shall be selected on the basis of cost savings or other benefit to DOE such as worker safety, compliance with life safety codes, enhancing mission capability, and facilitating contingency efforts.

[DOE O 470.1 [DIRS 145476], Contractor Requirement 5a.]

23.2.4.2 Technology Standards

New facility designs shall incorporate the use of standardized S&S equipment and systems, where possible without compromising design flexibility or adherence to performance criteria.

[DOE O 470.1 [DIRS 145476], Contractor Requirement 5b.]

23.2.4.3 Testing and Maintenance

S&S systems shall be installed, tested, and maintained as prescribed by manufacturer specifications to ensure reliable operations, and a low susceptibility for nuisance and false alarms. Testing and maintenance programs shall provide for timely compensatory measures to be taken upon identification of system trouble, such as equipment failure or tampering. The compensatory measures shall assure that the level of protection is not compromised before the system has been repaired, tested and returned to service.

[10 CFR 73.51 (d)(11) [DIRS 181969] calls for maintaining the system in an operable condition.]

23.3 Conformance Verification

Table 23-1. Safeguards and Security System Conformance Verification

Criterion		Preliminary Verification Method					
Number	Description	N/A	Analysis	Exam	Demo	Review	Test
23.2.1.1	SNF and HLW Custody					X	
23.2.1.2	Protected Area					X	
23.2.1.3	Safeguards & Security Interests					X	
23.2.1.4	Permanent Barriers					X	
23.2.1.5	Human Intrusion					X	
23.2.1.6	Protection Strategy					X	
23.2.1.7	Graded Protection Program					X	
23.2.1.8	Communications Control						X
23.2.1.9	SNF/HLW Accountability					X	
23.2.1.10	Material Control					X	
23.2.1.11	Computer Based Format						X
23.2.1.12	Electronic Information						X
23.2.1.13	Design Basis Threat Strategy					X	
23.2.1.14	Redundancy and Diversity Capabilities					X	
23.2.1.15	Documentation Protection					X	
23.2.1.16	Telecommunication Protection						X
23.2.1.17	Access to Standoff Distance					X	
23.2.1.18	Checkpoint Surveillance					X	
23.2.2.1	Central Alarm Station					X	
23.2.2.2	Secondary Alarm Station					X	
23.2.2.3	Continuous Surveillance					X	
23.2.2.4	Protected Area Access						X
23.2.2.5	Intrusion Detection						X
23.2.2.6	Illumination						X
23.2.2.7	Safeguards & Security Barriers					X	
23.2.2.8	Not Used	--	--	--	--	--	--
23.2.2.9	Not Used	--	--	--	--	--	--
23.2.2.10	Intrusion Detection System						X
23.2.2.11	Perimeter Intrusion Detection						X
23.2.2.12	Monitoring IDS						X
23.2.2.13	IDS Display						X
23.2.2.14	IDS Alarms						X
23.2.2.15	Deleted	--	--	--	--	--	--
23.2.2.16	Voice Communications						X
23.2.2.17	Tamper Indication						X
23.2.2.18	Closed Circuit TV						X
23.2.2.19	Alarm Assessment						X
23.2.2.20	Secure Storage					X	
23.2.2.21	Signage					X	
23.2.2.22	Automated Data Processing System						X
23.2.2.23	Interim Compensatory Measures					X	
23.2.2.24	Backup Electrical and UPS Power						X
23.2.2.25	Electronic Surveillance						X
23.2.3.1	Hazard Analysis		X				
23.2.3.2	Combustion Distances					X	
23.2.4.1	Cost Control		X				
23.2.4.2	Technology Standards					X	
23.2.4.3	Testing and Maintenance						X

24 Plant Services System

24.1 Overview

24.1.1 Introduction

The plant services system provides utility services for personnel and equipment usage during the operation of the surface facilities and subsurface activities. The utility service includes water, fuel oil, compressed air, and service gases. Water services include provisions for raw water, potable water, deionized water, and cooling tower water. Fuel oil services provide diesel fuel for the hot water boilers, standby and ITS generators, diesel-fueled transport vehicles, and diesel driven fire water pumps for the fire water system. The plant services system may require gasoline tanks, vaporizers, and pipe distribution lines with isolation valves, including a back flow preventer where a service gas truck would hook-up, near the building being served. Compressed air services provide instrument air and general-purpose air to the surface facilities. Service gases include helium, argon, and helium/argon blend.

24.1.2 System Classification

The plant services system has been classified as non-ITS. The plant services system does not include SSCs that are ITWI.

[Preclosure NSDB (BSC 2008 [DIRS 184200]), Appendix A , Table A-1 specifically provides the classification of the system.]

24.2 Functional and Performance Requirements and Bases

24.2.1 Mission Requirements

24.2.1.1 Raw Water

Raw water shall be provided to the potable water, deionized water, cooling tower water, and fire water subsystems. The raw water system shall be designed to preclude mineral buildup in those systems being supplied with raw water. Raw water shall also be provided for construction use.

[Derived engineering requirements provide for defining specific responsibilities for different water systems. This requirement satisfies part of PO&PR (BSC 2008 [DIRS 185008]), Section 2.7.5.]

24.2.1.2 Potable Water

Potable water shall be provided to the normally occupied areas of the surface facilities for drinking, non confinement area kitchen sinks, toilet fixtures, janitor closets, showers and eye wash stations. The potable water system shall be designed for the expected maximum personnel in each of the facilities.

[Derived engineering requirements provide for defining specific responsibilities for different water systems. This requirement satisfies part of PO&PR (BSC 2008 [DIRS 185008]), Section 2.7.5.]

24.2.1.3 Deionized Water

Deionized water shall be provided to the fuel handling pool and shall also be used also for decontamination if required.

[Derived engineering requirements provide for defining specific responsibilities for different water systems. Deionized water is necessary to support the water quality requirements for the pool. This requirement satisfies part of PO&PR (BSC 2008 [DIRS 185008]), Section 2.7.5.]

24.2.1.4 Cooling Tower Water

Cooling tower water shall be provided to the HVAC chiller condensers.

[Derived engineering requirements provide for dividing responsibilities for different water systems. This requirement satisfies part of PO&PR (BSC 2008 [DIRS 185008]), Section 2.7.5.]

24.2.1.5 General-Purpose/Instrument Air

The general-purpose/instrument air subsystem shall be provided for the operation of pneumatically controlled instruments, general-purpose use, and operation of dampers and air driven tools.

[Derived engineering requirements provide for dividing responsibilities for different air systems. The general-purpose/instrument air subsystem does not provide for compressed air for construction purposes or long-term underground development. This requirement satisfies part of PO&PR (BSC 2008 [DIRS 185008]), Section 2.7.5. This subsystem is for use by surface facilities only. There is no subsurface operational general purpose/instrument air supply.]

24.2.1.6 Service Gases

Helium and argon gases shall be supplied to the surface facilities from storage tanks or mobile tube trailers to support the waste handling system functions.

[Derived engineering requirements provide for identifying the different gases that will be provided. Gases are necessary for welding and other tasks. This requirement satisfies part of PO&PR (BSC 2008 [DIRS 185008]), Section 2.7.5.]

24.2.1.7 Fuel Oil

The fuel oil subsystem shall provide diesel fuel No. 2 to the hot water boilers and diesel engines (standby generators, diesel engine driven fire water pumps, and other equipment requiring diesel fuel No. 2).

[Derived engineering requirements identify the need for fuel oil based on the expected service system requirements. This fuel oil supply system does not include the ITS diesel fuel oil storage tanks, day tanks and associated supply system to the diesel, which are classified ITS. This requirement satisfies part of PO&PR (BSC 2008 [DIRS 185008]), Section 2.7.5. Emergency changed to ITS in accordance with Repository System Codes (BSC 2007 [DIRS 184183]).]

24.2.2 General Requirements

24.2.2.1 Raw Water Subsystem

24.2.2.1.1 Water Rights

The raw water subsystem shall obtain no more than 430 acre-ft of groundwater on a calendar year basis from either the J-12/J-13 wells, the C-Well Complex, or the VH-1 well. This total shall include water needs for construction and operation occurring within Hydrographic Basin 227A, and other repository activities occurring within the permitted place of use.

[DOE applications 63263 through 63267 for Permits to Appropriate the Public Waters of the state of Nevada were submitted to the State Engineer in 1997 for a total of 430 acre-ft annually (Dixon 1997 [DIRS 170737], [DIRS 170738], [DIRS 170739], [DIRS 170740], [DIRS 170741]). The combined total duty of all five applications to appropriate groundwater shall not exceed 430 acre-feet annually. This is also provided for in Criterion 9.10.2.2.4.]

24.2.2.1.2 Replacement Well

A replacement raw water well, constructed to state standards for potable water, shall be drilled not more than 300 ft from the location of the existing well if the existing well cannot be reconditioned and no longer produces the quantity of water allowed by the permit. The existing well shall be plugged at the time the replacement well is drilled.

[NAC 534.300(1)-(4), Underground Water and Wells [DIRS 151873] provides only for drilling replacement wells and the text for this criterion.]

24.2.2.1.3 Raw Water to Rail Equipment Maintenance Yard

The raw water subsystem shall provide for a 8-inch raw water line connection from C-Wells to the REMY. The interface coordinates between the repository and REMY is at N 757,158 and E 569,528.

[GROA/REMY Internal Constraints (BSC 2007 [DIRS 183653]), Table 2.1-1, IC-6 and IICD Volume 2 (DOE 2007 [DIRS 176810]), Section 3.1.16.4 calls for an 8-inch raw water line connection at the C-Wells Water

Treatment Facility to supply the 220,000-gallon REMY fire water tank for irrigation, locomotive wash-down and other industrial uses. Exact coordinates TBD.]

24.2.2.1.4 Construction Water to Rail Equipment Maintenance Yard

The raw water subsystem shall provide for a REMY construction water line tie-in to the 8-inch PVC raw water line from J-13 water line that currently runs parallel to H-Road and supplies the fire water tank on top of Exile Hill.

[GROA/REMY Internal Constraints (BSC 2007 [DIRS 183653]), Table 2.1-1, IC-9. The exact location of the construction water line tie-in will be determined as the layout develops for the Site Plan.]

24.2.2.2 Potable Water Subsystem

24.2.2.2.1 Deleted

[This requirement was combined into Criterion 24.2.1.2.]

24.2.2.2.2 Chlorination Treatment

The chlorination treatment shall provide a chlorine residual of not less than 0.05 mg/l at all times and at all locations in the distribution system.

[NAC 445A.6683.2(c), Water Controls [DIRS 104040].]

24.2.2.2.3 Arsenic Contamination Level

The arsenic treatment shall ensure that an arsenic maximum contaminant level of not more than 0.01 mg/l (10 µg/l or 10 ppb) is maintained in the distribution system.

[40 CFR 141.62(b)(16) [DIRS 184251].]

24.2.2.2.4 Primary Drinking Water Quality

The potable water system shall be designed to meet the primary drinking water maximum contaminant levels for nitrates, organic and inorganic limits, and lead and copper. The use of lead pipes and lead-based solder shall be prohibited.

[40 CFR 141.11(d), 40 CFR 141.43(a) and (d), 40 CFR 141.50 - 66, and 40 CFR 141.80 [DIRS 184251.]

24.2.2.2.5 Drinking Water Radionuclides

The potable water system shall not cause persons consuming the water to receive an effective dose equivalent greater than 4 mrem (0.04 mSv) in a year. Combined radium-226 and radium-228 shall not exceed 5×10-9 micro Ci/ml and gross alpha activity (including radium-226 but excluding radon and uranium) shall not exceed 1.5×10-8 micro Ci/ml.

[DOE O 5400.5 [DIRS 103956] Chapter II 1.d and 10 CFR 63.331 [DIRS 180319].]

24.2.2.2.6 Secondary Drinking Water Quality

The potable water system shall meet the secondary maximum contaminant levels that represent the reasonable goals for drinking water quality as required in 40 CFR 143.3 [DIRS 184244].

[40 CFR 143.3 provides the quality level standard. The State of Nevada may establish higher or lower levels, which may be appropriate dependent upon local conditions such as unavailability of alternate source waters or other compelling factors, provided that public health and welfare are not adversely affected.]

24.2.2.2.7 Eyewash and Emergency Showers

The potable water system shall provide water for eyewash and emergency shower stations where toxic or hazardous materials are present. The individual facilities in which the eyewash and emergency shower stations are located shall make the water tepid, as necessary.

[Activities at the site require the availability of eyewash stations and emergency shower facilities. Potable water is selected for the water quality relative to the human eyes and preventing contaminants.]

24.2.2.2.8 Potable Water to Rail Equipment Maintenance Yard

Potable water subsystem shall provide for a 4-inch potable water line connection from C-Wells capable of a rate of 6,000 gallons/day during operation of the REMY. The interface coordinates between the repository and REMY is at N 757,158 and E 569,528.

[DOE CO Letter 07-020 (Hamilton-Ray 2007 [DIRS 181033] has directed BSC to update the BOD to include requirements for the supply for the REMY and the Cask Maintenance Facility located outside of the GROA. GROA/REMY Internal Constraints (BSC 2007 [DIRS 183653]), Table 2.1-1, IC-5. IICD Volume 2 (DOE 2007 [DIRS 176810]), Section 3.1.16.4 calls for a 4-inch potable water line connection at the C-Wells Water Treatment Facility for REMY domestic consumption and use. Exact coordinates TBD.]

24.2.2.3 Deionized Water Subsystem

24.2.2.3.1 Deionizer Unit

The deionized water subsystem shall be provided with a deionizer unit suitable for repository use. The deionizer unit shall not require in situ resins regeneration that may produce contaminants and byproducts not suitable for treatment or disposal.

[The fuel pool water quality necessitates deionized water.]

24.2.2.3.2 Deionized Water Makeup Water

The deionized water subsystem shall provide makeup water for the fuel handling pool and for decontamination, if required, that do not require corrosion inhibitors.

[The fuel pool water quality necessitates deionized water.]

24.2.2.3.3 Deionized Water Quality

The ion exchange unit shall process the raw water to reduce total dissolved solids to a water quality compatible for the fuel handling pool.

[The fuel pool water quality necessitates deionized water.]

24.2.2.4 Cooling Tower Water Subsystem

24.2.2.4.1 Cooling Tower Water Temperature

The cooling tower supply water temperature shall be a nominal 85°F (minimum 40°F winter operation) based on the design ambient wet bulb temperature of 69°F.

[Temperature range based on accepted industry practices as discussed in Chapters 13 and 36 of 2004 ASHRAE Handbook, Heating, Ventilating, and Air-Conditioning Systems and Equipment (ASHRAE 2004 [DIRS 171799]). The design ambient wet bulb temperature is based on the outdoor design condition at Mercury, Nevada, obtained from Table 1B in Chapter 27 of 2001 ASHRAE Handbook, Fundamentals (ASHRAE 2001 [DIRS 157789]). Although there is a later revision of ASHRAE Handbook, Fundamentals, it is not being cited because the design temperatures are not contained in that version.]

24.2.2.4.2 Cooling Tower Location

The cooling tower shall be located a sufficient distance from work areas and building ventilation supply air systems for noise control and to prevent harmful bacteria from entering the workers' breathing zones.

[To preclude hazards to work areas, cooling tower locations will be an appropriate distance away from the work zones to ensure water purification process remains uncontaminated.]

24.2.2.5 General-Purpose/Instrument Air Subsystem

24.2.2.5.1 Air Compressor

The intake for the general-purpose/instrument air compressors shall be located in a well-ventilated area that is free of contaminants such as harmful fumes, engine exhaust, and other dangerous solvents.

[To ensure worker protection and optimize equipment operation.]

24.2.2.5.2 Instrument Air Piping

Air receivers for instrument air/general purpose air and its distribution system shall be totally independent and shall be sized to allow for a reasonable shutdown of equipment in the event of compressor malfunctions. Air receivers shall be designed with pressure safety valves to protect against vessel malfunctions.

[Necessary for optimum air piping performance.]

24.2.2.5.3 Instrument Air Quality

Instrument air shall be dry and oil-free for the operation of pneumatically controlled instruments. The compressed air relative humidity shall be at a maximum of 2% corresponding to a dew point temperature of -30 ºF.

[ANSI/ISA S7.0.01-1996, [DIRS 164287].]

24.2.2.6 Fuel Oil Subsystem

24.2.2.6.1 Diesel Fuel Oil Storage Tank

The diesel fuel oil subsystem storage tanks shall be accessible by tank truck.

[To accommodate diesel fuel delivery.]

24.2.2.6.2 Fuel Oil and Water Separator

The fuel oil subsystem shall include an oil/water separator to prevent oil from entering into the drainage system. The system shall include a sampling port at or near the discharge point.

[Although not specifically called out by regulation, based on an interpretation of 40 CFR 112.12 [DIRS 184243], which is implemented in the Non-Radioactive Waste Management System, the fuel oil system provides a specific risk of discharge that needs to be addressed.]

24.2.3 Safety and Protection Requirements

24.2.3.1 Natural Phenomena Protection

The plant services subsystems shall be designed and operated to withstand the effects of natural phenomena consistent with its non-safety classification.

[Derived engineering requirements dictate that these plant services subsystems be designed to meet seismic, lightning, wind, floods, ice, and snow criteria.]

24.2.4 Miscellaneous Requirements

There are no identified requirements for this section. As requirements are identified in the future, they will be added.

24.3 Conformance Verification

Table 24-1. Plant Services Conformance Verification

Criterion		Preliminary Verification Method					
Number	**Description**	**N/A**	**Analysis**	**Exam**	**Demo**	**Review**	**Test**
24.2.1.1	Raw Water					X	
24.2.1.2	Potable Water					X	
24.2.1.3	Deionized Water					X	
24.2.1.4	Cooling Tower Water					X	
24.2.1.5	General-Purpose/Instrument Air					X	
24.2.1.6	Service Gases					X	
24.2.1.7	Fuel Oil					X	
24.2.2.1.1	Water Rights	X					
24.2.2.1.2	Replacement Well	X					
24.2.2.1.3	Raw Water to Rail Equipment Maintenance Yard					X	
24.2.2.1.4	Construction Water to Rail Equipment Maintenance Yard					X	
24.2.2.2.1	Deleted	--	--	--	--	--	--
24.2.2.2.2	Chlorination Treatment						X
24.2.2.2.3	Arsenic Contamination Level						X
24.2.2.2.4	Primary Drinking Water Quality		X				
24.2.2.2.5	Drinking Water Radionuclides		X				
24.2.2.2.6	Secondary Drinking Water Quality		X				
24.2.2.2.7	Eyewash and Emergency Showers					X	
24.2.2.2.8	Potable Water to Rail Equipment Maintenance Yard					X	
24.2.2.3.1	Deionizer Unit					X	
24.2.2.3.2	Deionized Water Makeup Water					X	
24.2.2.3.3	Deionized Water Quality					X	
24.2.2.4.1	Cooling Tower Water Temperature		X				
24.2.2.4.2	Cooling Tower Location					X	
24.2.2.5.1	Air Compressor					X	
24.2.2.5.2	Instrument Air Piping					X	
24.2.2.5.3	Instrument Air Quality					X	
24.2.2.6.1	Diesel Fuel Oil Storage Tank					X	
24.2.2.6.2	Fuel Oil and Water Separator					X	
24.2.3.1	Natural Phenomena Protection					X	

25 Communications System

25.1 Overview

25.1.1 Introduction

The communications system provides communications transport services for data, voice, and video transmissions throughout the repository and consists of five subsystems: voice, data, video, network, and transport subsystems. The communications systems support HLW monitoring and control, firefighter communications, subsurface fire alarms, ES&H, construction, administration, and emergency management. In addition, the communications system supports tracking of the transportation of nuclear waste packages in transit to Yucca Mountain.

The communications system uni-directionally transfers voice, video, and data information to designated offsite locations in a secure manner so that personnel in those locations can independently and selectively monitor, but not control, the transfer, processing, transportation, emplacement, and retrieval of HLW in the repository. The communications system is divided into several secured networks. These include the operations network, the safeguards and security networks, the site administrative network, the ES&H network, the utility network, and the site telephone network. All network communication protocols are compliant with the Internet, thus enabling expansion and interoperability while avoiding obsolescence.

25.1.2 System Classification

The communications system has been classified as non-ITS. The communications system does not include SSCs that are ITWI.

[Preclosure NSDB (BSC 2008 [DIRS 184200]), Appendix A, Table A-1 specifically provides the classification of the system.]

25.2 Functional and Performance Requirements and Bases

25.2.1 Mission Requirements

25.2.1.1 Communication Support

The communications system shall provide voice, data, and video communication to support safety and security functions, emergency response functions, and site administrative network.

[PO&PR (BSC 2008 [DIRS 185008]), Section 2.7.16.]

25.2.1.2 Communication Functions

Voice and video communications shall be provided at the surface, subsurface, and offsite to assist with surface facilities operations, transportation, and subsurface operations.

[PO&PR (BSC 2008 [DIRS 185008]), Sections 2.7.8, 2.7.12 and 2.7.13.]

25.2.1.3 Data Communications

Data communications shall be provided to transfer data to a facility network to assist with surface facilities operations, transportation, and subsurface operations. Data communications shall be provided to transport video, voice, and data to permit monitoring (but not control) of transfer area, transport, and emplacement operations at designated offsite facilities in a secure manner.

[PO&PR (BSC 2008 [DIRS 185008]), Sections 2.7.8, 2.7.14 and 2.7.15.]

25.2.1.4 Voice Communications

The voice communications systems used for security and construction purposes are operable and provide intelligible voice communications in all security areas for all modes of operation including construction phases, offsite waste transportation operations and waste acceptance.

[DOE M 470.4-2 [DIRS 178562], Chapter XII.1, PO&PR (BSC 2008 [DIRS 185008]), Sections 2.7.17 and 2.7.18.]

25.2.1.5 National Transportation Interface

The communications system shall be able to continuously transport secured wireless voice between the CCCF and vehicles transporting nuclear waste while in transit to the repository to support branch line train controls, emergency response, security, and other operations during the operations period. The communications system shall be able to support tracking of the waste transport vehicles. Land line communications shall be provided as a backup to the wireless system. Video communications and data links will be necessary.

[PO&PR (BSC 2008 [DIRS 185008]), Section 2.7.18 and IICD Volume 2 (DOE 2007 [DIRS 176810]), Section 3.1.18.]

25.2.1.6 Redundant Capability

The communications system shall provide for redundancy protection for continuous communication capability between onsite security forces within the repository and designated response force or local law enforcement authority to satisfy protection, notification, control, and emergency criteria.

[10 CFR 73.51 (d)(8) [DIRS 181969]. This criterion satisfies the PO&PR (BSC 2008 [DIRS 185008]), Section 2.7.21.]

25.2.1.7 Reliability

The communications system shall provide reliable primary and back-up communication. The system shall maintain transmission capability to onsite and offsite personnel during emergency situations via multiple mechanisms (e.g., telephone and radio). This capability shall be located in the CCCF, CAS, SAS, and the Fire, Rescue, and Medical Facility, at a minimum.

[DOE M 470.4-2 [DIRS 178562], Chapter V.2 and Chapter VII.4.a. This is a historical functional requirement that will be kept. However, instead of indicating communication in generic locations, the repository specific locations are provided.]

25.2.1.8 Public Address System

The communications systems shall provide alarms and public address systems to support employee safety and health operations.

[This criterion satisfies the PO&PR (BSC 2008 [DIRS 185008]), Section 2.7.20.]

25.2.1.9 Telephone for Rail Equipment Maintenance Yard

The communications system shall provide telephone communications connections through a fiber-optic tie-in at the CCCF.

[GROA/REMY Internal Constraints (BSC 2007 [DIRS 183653]), Table 2.1-1, IC-10.]

25.2.2 General Requirements

25.2.2.1 Wireless Control

The communications system shall transport wireless control and data communications between the DCMIS and the surface and subsurface waste package transportation and emplacement equipment.

[Communication services are necessary to provide proper facility operations.]

25.2.2.2 Alarms

The communications system shall transport alarm signals to be sent to all normally occupied areas of the surface and subsurface facilities. The alarms shall automatically activate an evacuation alarm, siren, or message within the facility from which the alarm originates without the need for human intervention. Dialing from a remote location shall be able to address and select an alarm from a list of locally prestored warning tones, sirens, strobe lights, and messages.

[DOE M 470.4-2 [DIRS 178562], Chapter VII.4.a and PO&PR (BSC 2008 [DIRS 185008]), Section 2.7.20.]

25.2.2.3 Video Communications

The communications system shall provide real-time wired and wireless communications for video images and camera control signals, between the locations where video is provided and the surface transfer, processing (including waste package closure room) and aging areas, and the surface and subsurface waste package transportation and emplacement equipment. The communications system shall also provide transport of near-real-time portable video communications for firefighters and ES&H personnel from on-scene locations to the control centers.

[Communication services are necessary to provide proper facility security.]

25.2.2.4 Portable and Mobile Communications

The communications system shall provide portable (hand-held) and mobile (vehicular) radio communications for the fire department, ES&H, environmental monitoring personnel, radiation protection personnel, and construction. The communication system shall also provide for transport of voice messages over the public address system.

[Although this is operationally purchased equipment, this requirement provides for the integration of the installed equipment and the purchased equipment.]

25.2.2.5 Continuous Transmission

The communications system shall provide wired and wireless telephone services for all repository surface and subsurface operations. All wired and wireless telephones shall be capable of communicating directly with the CCCF and with the Fire, Rescue, and Medical Facility.

[The CAS and SAS are not included in this requirement because they will not be involved with the receipt of transportation communications. Any information affecting the CAS and SAS will be provided by the CCCF.]

25.2.2.6 Central Network Operations

All networks and network services that make up the communications system shall be centrally managed from the network operation center.

[Communication services are necessary to provide proper facility security.]

25.2.2.7 Local Area Network Interface

The communications system shall provide the local area network components to connect the interfacing devices to the communications system internet-compatible network.

[Communication services are necessary to provide proper facility security.]

25.2.3 Safety and Protection Requirements

25.2.3.1 Seismic

The communications system equipment required for the transfer of information, such as post event monitoring, to the DCMIS, CCC, EOC, EOF, and offsite locations shall be designed for the site-specific, 1,000-year return period earthquake.

[Communication services are necessary for public, worker, industrial, and life safety.]

25.2.4 Miscellaneous Requirements

There are no identified requirements for this section. As requirements are identified in the future, they will be added.

25.3 Conformance Verification

Table 25-1. Communications Conformance Verification

Criterion		Preliminary Verification Method					
Number	Description	N/A	Analysis	Exam	Demo	Review	Test
25.2.1.1	Communication Support						X
25.2.1.2	Communication Functions						X
25.2.1.3	Data Communications						X
25.2.1.4	Voice Communications						X
25.2.1.5	National Transportation Interface					X	
25.2.1.6	Redundant Capability						X
25.2.1.7	Reliability		X				
25.2.1.8	Public Address System						X
25.2.1.9	Telephone for Rail Equipment Maintenance Yard					X	
25.2.2.1	Wireless Control						X
25.2.2.2	Alarms						X
25.2.2.3	Video Communications						X
25.2.2.4	Portable and Mobile Communications						X
25.2.2.5	Continuous Transmission						X
25.2.2.6	Central Network Operations					X	
25.2.2.7	Local Area Network Interface						X
25.2.3.1	Seismic		X				

26 Digital Control And Management Information System

26.1 Overview

26.1.1 Introduction

The digital control and management information system (DCMIS) includes displays, control software, and interfacing equipment that will be designed and procured to the requirements appropriate to the safety and quality functions of the components and systems. The DCMIS provides control and monitoring for selected process support and utility operations through human-machine interface (HMI) consoles provided in the CCC. Specialized mechanical handling operations and welding robotic operations are controlled through control systems provided with the equipment. The DCMIS interfaces with these control systems to enable supervisory control and monitoring through HMI consoles located in the various facility operations rooms. Controls necessary to place the repository in a safe operating condition are provided outside the CCC to account for an event that causes the CCC to be uninhabitable. The DCMIS provides monitoring capability of all nuclear facility operations from the CCC. The DCMIS also provides supervisory control of the transport and emplacement vehicle (TEV) from the HMI consoles in the CCC. DCMIS provides information on facility and system status and capabilities to the emergency management facilities to allow adequate assessment and provide for emergency response functions.

26.1.2 System Classification

The DCMIS has been classified as non-ITS. The DCMIS does not include SSCs that are ITWI.

[Preclosure NSDB (BSC 2008 [DIRS 184200]), Appendix A, Table A-1 specifically provides the classification of the system.]

26.2 Functional and Performance Requirements and Bases

26.2.1 Mission Requirements

26.2.1.1 Control and Monitoring

The DCMIS shall control and monitor the following systems:

1. Subsurface ventilation system
2. Surface nuclear confinement HVAC system
3. Plant heating and cooling system
4. Plant services system
5. Low-level radioactive waste management system.
6. Pool water treatment and cooling system.

[Based on good engineering practice to ensure there is a means to control and monitor facility or system operation.]

26.2.1.2 Supervisory Control and Monitoring

The DCMIS shall provide supervisory control and monitoring of the following systems:

1. Non-nuclear handling system
2. Waste package closure system
3. SNF and HLW transfer system
4. Cask/canister/waste package process system
5. Cask receipt and return subsystem
6. Transportation and emplacement vehicle (TEV)
7. Remediation system.
8. Surface non-confinement HVAC system

[Based on good engineering practice to ensure there is a means to control and monitor facility or system operation.]

26.2.1.3 Monitoring

The DCMIS shall monitor the following systems:

1. Fire protection system

2. NRWMS
3. Aging Facility
4. Heat tracing subsystem of the electrical support system
5. Safeguards and security system
6. Environmental/meteorological monitoring system
7. Radiation/radiological monitoring system
8. Performance confirmation system
9. Communications system.
10. Electrical power system

[Based on good engineering practice to ensure there is a means to control and monitor facility or system operation.]

26.2.2 General Requirements

26.2.2.1 Deleted

[This requirement was a duplicate of Criterion 9.1.2.1.1.]

26.2.2.2 Human-Machine Interface

The DCMIS shall be provided with HMI consoles in the CCCF to control and/or monitor selected systems and areas of the repository.

[DCMIS services are required to ensure adequate control and monitoring process support and utility operations.]

26.2.2.3 Deleted

[This requirement was a duplicate of Criterion 9.1.2.1.5.]

26.2.2.4 Engineering Workstation

The DCMIS shall be provided with an engineering workstation to enable engineering configuration changes and installation of updates and revisions to the operating software. The engineering workstation shall be provided with high-resolution monitors capable of operating as a fully functional operator HMI console.

[DCMIS services are required to ensure adequate control and monitoring process support and utility operations.]

26.2.2.5 Alarms

The DCMIS shall provide alarms that can be assigned different priority levels and alarm response time capable of being one second or faster.

[Although this requirement is provided for in the DOE Security manuals and not specifically provided for DCMIS, it provides an acceptable performance standard.]

26.2.2.6 Trending and Reporting

The DCMIS shall collect, archive, and retrieve operational and performance confirmation data and shall be capable of providing trends and reports.

[DCMIS services are required to ensure adequate control and monitoring process support and utility operations.]

26.2.3 Safety and Protection Requirements

26.2.3.1 Control Capabilities

The DCMIS shall provide control capabilities to maintain nuclear material inventories and support safeguards and security requirements.

[DCMIS services are required to ensure adequate control and monitoring process support and utility operations. Emergency response criterion has been moved to Criterion 26.2.3.3.]

26.2.3.2 Seismic

The DCMIS equipment associated with the monitoring of information, such as post-event monitoring, and the transfer of that information to the EOC, EOF, and offsite locations shall be designed for the site-specific, 1,000-year return period earthquake.

[Information is necessary for public, worker, industrial, and life safety.]

26.2.3.3 Emergency Management Capability

The DCMIS shall provide information to the operations rooms or areas within the nuclear facilities, CCC, on-site EOC, administrative facility, and the off-site EOF for managing emergencies. The DCMIS shall provide the equivalent functions attributed to a Safety Parameter Display System and provide the capability to communicate site meteorological and site effluent radiological release information by a Nuclear Data Link to the NRC Operations Room.

[RGA REG-CRW-RG-000455 (BSC 2007 [DIRS 184409]), Agreement for NUREG-0696, Functional Criteria for Emergency Response Facilities - Final Report, Sections 1.3.4 and 1.3.5.]

26.2.4 Miscellaneous Requirements

26.2.4.1 Testing and Maintenance

The system shall be provided with built-in test capabilities to perform self-diagnostics and maintenance without affecting system performance.

[This requirement supports the continuing verification of system operability to maintain necessary functions and processes of repository operations, without affecting the performance of the system.]

26.3 Conformance Verification

Table 26-1. DCMIS Conformance Verification

Criterion		Preliminary Verification Method					
Number	Description	N/A	Analysis	Exam	Demo	Review	Test
26.2.1.1	Control and Monitoring					X	
26.2.1.2	Supervisory Control and Monitoring					X	
26.2.1.3	Monitoring					X	
26.2.2.1	Deleted	--	--	--	--	--	--
26.2.2.2	Human-Machine Interface					X	
26.2.2.3	Deleted	--	--	--	--	--	--
26.2.2.4	Engineering Workstation					X	
26.2.2.5	Alarms						X
26.2.2.6	Trending and Reporting						X
26.2.3.1	Control Capabilities					X	
26.2.3.2	Seismic		X				
26.2.3.3	Emergency Management Capability					X	
26.2.4.1	Testing and Maintenance						X

27 Environmental/Meteorological Monitoring System

27.1 Overview

27.1.1 Introduction

The function of the environmental/meteorological monitoring system (EMMS) is to monitor meteorological parameters on the surface area and seismic parameters on the surface and subsurface areas. The EMMS shall provide means to monitor and record meteorological data and supply seismic data for operations, emergency preparedness, and performance confirmation.

The seismic monitoring subsystem consists of instrumentation, which will monitor seismic activities on the surface and subsurface areas. Data acquired by the instrumentation will be transmitted to the seismic server, which will interface with the DCMIS using a standard industry non-proprietary interface. This information will be displayed on the radiation/environmental/post-event monitoring and performance confirmation HMI console in the CCC and in the various nuclear facility control areas.

The meteorological monitoring subsystem consists of the appropriate instrumentation to monitor and record meteorological parameters such as wind speed, wind direction, air temperature, relative humidity, barometric pressure, precipitation, and solar radiation. Data acquired by the instrumentation will be transmitted to the meteorological server using a standard industry nonproprietary interface. The meteorological server will interface with the DCMIS, and the information will then be displayed on the radiation/environmental/post-event monitoring and performance confirmation HMI console in the CCC and other appropriate consoles.

27.1.2 System Classification

The environmental/meteorological monitoring system (EMMS) has been classified as non-ITS. The EMMS does not include SSCs that are ITWI.

[Preclosure NSDB (BSC 2008 [DIRS 184200]), Appendix A, Table A-1 specifically provides the classification of the system.]

27.2 Functional and Performance Requirements and Bases

27.2.1 Mission Requirements

27.2.1.1 Meteorological and Seismic Data

The EMMS shall provide means to monitor and record meteorological data and supply seismic data for operations, emergency preparedness, and performance confirmation.

[DOE O 420.1A [DIRS 159450], Contractor Requirement 4.4.5, requires facilities with hazardous materials to have instrumentation or means to detect and record seismic events. RGA REG-CRW-RG-000455 (BSC 2007 [DIRS 184409]), similar to the requirement in Section 2.2.4.2, also references seismic information for managing emergencies.]

27.2.2 General Requirements

There are no identified requirements for this section. As requirements are identified in the future, they will be added.

27.2.3 Safety and Protection Requirements

There are no identified requirements for this section. As requirements are identified in the future, they will be added.

27.2.4 Miscellaneous Requirements

27.2.4.1 DCMIS Interface

The meteorological monitoring subsystem and the seismic monitoring subsystem shall interface with the DCMIS. Meteorological and seismic information shall be provided on the radiation/environmental/post-event monitoring and performance confirmation HMI console in the CCC. The operator shall be provided with the following information on the console:

- Graphical representation of the subsystem
- Values in engineering units of meteorological parameters
- Status indications and operator messages concerning the subsystem
- Audible and visual alarms indicating off-normal conditions
- Data collection, data storage and retrieval capability, and trending
- Continuous reporting of real time meteorological parameters.

[This is an engineering derived requirement to provide additional detail to perform Criterion 27.2.1.1, Meteorological and Seismic Data.]

27.2.4.2 Environmental Monitoring

The EMMS shall provide means to monitor and record wind speed, wind direction, temperature, barometric pressure, relative humidity, precipitation, and solar radiation.

[This is an engineering derived requirement to provide additional detail to perform Criterion 27.2.1.1, Meteorological and Seismic Data.]

27.2.4.3 Seismic Monitoring

The EMMS seismic monitoring subsystem shall provide sensors to monitor vertical and horizontal seismic motion in the subsurface area and within and around surface area buildings classified as ITS and shall be operable at all times. The system shall supply this information for emergency preparedness and performance confirmation consistent with preclosure seismic design for SSCs.

[This is an engineering derived requirement to provide additional detail to perform Criterion 27.2.1.1, Meteorological and Seismic Data.]

27.2.4.4 Deleted

[This requirement was combined into Criterion 27.2.4.3.]

27.2.4.5 Seismic Analysis Equipment

The seismic monitoring subsystem shall provide equipment to perform recording and seismic motion analysis functions.

[This is an engineering derived requirement to provide additional detail to perform Criterion 27.2.1.1, Meteorological and Seismic Data.]

27.2.4.6 Deleted

[This requirement was deleted as duplicate of Criterion 27.2.4.1.]

27.2.4.7 Power Supply

The system shall be provided with solar panels with backup batteries for remotely located equipment, and UPS power for other equipment associated with the EMMS.

[Solar panels with battery backup is necessary so that remote equipment will be powered without having to run cables. UPS power ensures the information is always available.]

27.3 Conformance Verification

Table 27-1. EMMS Conformance Verification

Criterion		Preliminary Verification Method					
Number	**Description**	**N/A**	**Analysis**	**Exam**	**Demo**	**Review**	**Test**
27.2.1.1	Meteorological and Seismic Data					X	
27.2.4.1	DCMIS Interface					X	
27.2.4.2	Environmental Monitoring					X	
27.2.4.3	Seismic Monitoring					X	
27.2.4.4	Deleted	--	--	--	--	--	--
27.2.4.5	Seismic Analysis Equipment					X	
27.2.4.6	Deleted	--	--	--	--	--	--
27.2.4.7	Power Supply					X	

28 Radiation/Radiological Monitoring System

28.1 Overview

28.1.1 Introduction

The radiation/radiological monitoring system provides radiation and contamination monitoring to facilitate the reduction of exposure to radiation (as low as is reasonably achievable) and to detect loss of control in process functions, if required. The permanently installed radiation/radiological monitoring system monitors area radiation levels, airborne radioactivity levels, and airborne radioactivity effluent-levels and provides alarms to alert personnel to take protective action.

The system is distributed throughout the surface and subsurface facilities. The system communicates with the DCMIS to store data, report monitoring information, and make data available to other repository systems. The radiation/radiological monitoring system provides radiological parameters for use in operations, radiological dispersion models, and radiological emergency management.

Although space and support requirements for radiation protection equipment (associated with contamination surveys and evaluation and with personnel dosimetry and monitoring as part of operational Radiation Protection program) are also shown in this section, this equipment is not part of the radiation/radiological monitoring system.

28.1.2 System Classification

The radiation/radiological monitoring system has been classified as non-ITS. The radiation/radiological monitoring system does not include SSCs that are ITWI.

[Preclosure NSDB (BSC 2008 [DIRS 184200]), Appendix A, Table A-1 specifically provides the classification of the system.]

28.2 Functional and Performance Requirements and Bases

28.2.1 Mission Requirements

28.2.1.1 Radioactive Effluent Monitoring

The radiation/radiological monitoring system shall provide instrumentation to sample and/or monitor and display levels of radioactive materials (exclusive of radon) in effluents from the nuclear facilities and emplacement side subsurface released to unrestricted and controlled areas.

[10 CFR 20.1302(a) [DIRS 181962]. Although only airborne effluents are expected, the requirement ensures that each potentially radioactive effluent waste stream will be monitored.]

28.2.1.2 Radioactive Air Monitoring

The radiation/radiological monitoring system shall provide instrumentation in the repository facilities that handle SNF or HLW or store radioactive material to take suitable and timely measurements of concentrations of radioactive materials in the air in work areas.

[10 CFR 20.1204(a)(1) and 10 CFR 20.1703(c)(1) [DIRS181962].]

28.2.1.3 Area Radiation Monitoring

The radiation/radiological monitoring system shall provide area radiation monitors (ARM) in the IHF, CRCFs, Receipt Facility, WHF, and other repository facilities, as necessary. The monitors shall be designed to detect changes in radiation levels above the expected levels and produce alarm signals in order to alert personnel to take protective action.

[Although TMRB-2004-073 (BSC 2004 [DIRS 177194]) provided management decision for a criticality alarm system to provide defense in depth protection for personnel, TMRB-2007-053 (BSC 2007 [DIRS 183263]) provided more recent direction that a criticality alarm system is not necessary for the materials handled, handling operations performed, aging functions conducted, and disposal operations resulting from repository operations. Although monitoring of some of the same parameters will still be conducted, the "criticality" alarm system that is discussed in Regulatory Guide 3.71 will not be provided. This also implements RGA REG-CRW-RG-000240,

Agreement for Regulatory Guide 3.71, Revision 1 - Nuclear Criticality Safety Standards for Fuels and Material Facilities [DIRS 182784], which allows for not utilizing a criticality alarm system in cases that satisfy the stated low probability or consequence criteria. CBCN002 to Revision 001 provided this change. Although the CBCN to change from a criticality alarm system to a radiation monitoring system provided specific text, the text has been changed to reflect the ARMs function.]

28.2.1.4 Radiological Measurement and Monitoring

The radiation/radiological monitoring system shall provide permanently installed equipment needed for monitoring, evaluating, and surveys (except for personnel monitoring) that may be necessary for the licensee to comply with 10 CFR 20 [DIRS 181962] and are reasonable under the circumstances to evaluate the magnitude and extent of radiation levels, concentrations or quantities of radioactive material, an increase in radioactivity in effluents, and the potential radiological hazards. This system shall warn of significant increases in radiation levels.

[10 CFR 20.1501(a) [DIRS 181962]. This supports the PCSA requirement to describe a radiation alarm system in their analyses from 10 CFR 63.112(e)(7) [DIRS 180319]. Although portable equipment is not provided for by design, space and power to support use of portable equipment are necessary.]

28.2.1.5 Radiological Counting Room Support

Although not part of the radiation/radiological monitoring system, a dedicated radiological counting room(s) capable of providing the necessary space and services including power for radiological measuring instruments shall be provided to analyze samples collected in support of repository operations.

[PO&PR (BSC 2008 [DIRS 185008]), Section 2.2.28. Although not part of the RRMS, this requirement is not currently re-allocated to any specific facilities and will remain in this section until more detailed design allows a re-allocation. Counting equipment is the responsibility of the Radiation Protection program and not the design organization.]

28.2.1.6 Power Supply

The radiation/radiological monitoring system shall be provided with power from a UPS.

[UPS power system ensures the information is always available.]

28.2.1.7 Grab Sample Capability

The airborne radioactivity effluent monitors shall provide capability for grab samples. This capability shall be provided for continuous air monitors, if appropriate, for the application of the continuous air monitors (CAM).

[Dose calculations require determination of the radioisotope concentrations in the effluent streams or air. These dose calculations are required by 10 CFR 20.1202 [DIRS 181962] for occupational doses and by 10 CFR 20.1302 for doses to the public.]

28.2.2 General Requirements

There are no identified requirements for this section. As requirements are identified in the future, they will be added.

28.2.3 Safety and Protection Requirements

28.2.3.1 Radiation Dosimetry Support

The radiation/radiological monitoring system shall ensure that facility space and services (e.g., power supplies) are provided for any equipment necessary to process personal radiation dosimeters where a facility or program must be in place to determine occupational doses to personnel from external exposure to radiation.

[This is a derived requirement based on the repository need to meet dose rate criteria. To measure the dose rate is to satisfy 10 CFR 20 [DIRS 181962]. Although not part of the RRMS, this requirement is not currently re-allocated to any specific facilities and will remain in this section until more detailed design allows a re-allocation. Counting equipment is the responsibility of the Radiation Protection program and not the design organization.]

28.2.3.2 Personnel Monitoring Support

The radiation/radiological monitoring system shall ensure that facility space and services (e.g., power supplies, etc.) are provided such that radiological surveys of personnel for radioactive contamination may be performed prior to leaving any area with the potential for radioactive contamination and prior to leaving the restricted areas, where:

1. Personnel are monitored for radiation exposure.
2. Personal contamination monitoring at designated control points and portable contamination survey instruments in radiological control areas are provided to ensure personnel contamination levels satisfy as low as is reasonably achievable (ALARA) requirements.
3. Personnel are surveyed to determine the extent of radiation levels, concentrations or quantities of radioactive material, and potential radiological hazards.

[This is a derived requirement based on the repository need to meet dose rate criteria. This is typically satisfied operationally but is included here for convenience. To measure the dose rate is to satisfy 10 CFR 20 [DIRS 181962]. Although not part of the RRMS, this requirement is not currently re-allocated to any specific facilities and will remain in this section until more detailed design allows a re-allocation. Counting equipment is the responsibility of the Radiation Protection program and not the design organization.]

28.2.3.3 Internal Deposition of Radioactive Material Support

The radiation/radiological monitoring system shall ensure that facility space and services (e.g., power supplies, etc.) are provided for equipment necessary to determine occupational doses to personnel from internally deposited radioactive material and show compliance with regulatory dose limits.

[This is a derived requirement based on the repository need to meet dose rate criteria. To measure the dose rate is to satisfy 10 CFR 20 [DIRS 181962]. Although not part of the RRMS, this requirement is not currently re-allocated to any specific facilities and will remain in this section until more detailed design allows a re-allocation. Counting equipment is the responsibility of the Radiation Protection program and not the design organization.]

28.2.3.4 Radiological Analysis on Samples Support

The radiation/radiological monitoring system shall ensure that facility space and services (e.g., power supplies, etc.) are provided for equipment necessary to perform radiological analyses on samples (smears, air, process, etc.) where equipment and material shall be surveyed to show compliance with applicable limits prior to release from restricted areas. The process shall be capable of detecting radioactive contamination levels below applicable limits.

[10 CFR 20.1501(a) [DIRS 181962]. Although not part of the RRMS, this requirement is not currently re-allocated to any specific facilities and will remain in this section until more detailed design allows a re-allocation. Counting equipment is the responsibility of the Radiation Protection program and not the design organization.]

28.2.3.5 Deleted

28.2.4 Miscellaneous Requirements

28.2.4.1 DCMIS Interface

The radiation/radiological monitoring system shall interface with the DCMIS on the radiation/environmental/post-event monitoring and performance confirmation HMI console in the CCC. Additionally, the consoles in the facilities' operations rooms shall provide information from the monitors located in that facility. The operator**s** shall be provided with the following information on the console:

- Graphical representation of the subsystem
- Values in engineering units of parameters
- Status indications and operator messages concerning the subsystem
- Audible and visual alarms indicating off-normal conditions
- Data collection, data storage and retrieval capability, and trending
- Continuous reporting of real time parameters.

[This is standard industry practice.]

28.3 Conformance Verification

Table 28-1. Radiation/Radiological Monitoring System Conformance Verification

Criterion		Preliminary Verification Method					
Number	**Description**	**N/A**	**Analysis**	**Exam**	**Demo**	**Review**	**Test**
28.2.1.1	Radioactive Effluent Monitoring					X	
28.2.1.2	Radioactive Air Monitoring					X	
28.2.1.3	Area Radiation Monitoring					X	
28.2.1.4	Radiological Measurement and Monitoring					X	
28.2.1.5	Radiological Counting Room Support					X	
28.2.1.6	Power Supply					X	
28.2.1.7	Grab Sample Capability					X	
28.2.3.1	Radiation Dosimetery Support					X	
28.2.3.2	Personnel Monitoring Support					X	
28.2.3.3	Internal Disposition of Radioactive Material Support					X	
28.2.3.4	Radiological Analysis on Sample Support					X	
28.2.3.5	Deleted	--	--	--	--	--	--
28.2.4.1	DCMIS Interface					X	

29 Cask/Canister/Waste Package Process System

29.1 Overview

29.1.1 Introduction

The cask/canister/waste package process systems perform the gas sampling, evacuating and inerting functions and include the capability to handle gaseous LLW streams generated by performing those functions. In conjunction with the LLW management system, processing of gaseous waste streams may include cooling and filtration to remove radioactive particulates. The TAD canister drying and inerting subsystem within the WHF removes the residual water in the TAD canisters and performs inerting of the TAD cavity.

The cask/canister/waste package process systems, which are located in several facilities, include the following:

- Gas sampling, evacuating, and inerting systems (WHF)
- Transportation Cask and DPC cavity gas sampling
- TAD inerting (WHF) and waste package (IHF, CRCFs) inerting
- Transportation Cask and DPC cooling (WHF)
- TAD drying (WHF).

[Engineering Study Transportation Cask Gas Sampling Requirements Analysis (BSC 2007 [DIRS 181530]) provided criteria for gas sampling. Although the study only requires gas-sampling in the WHF, project direction is to have the capability in each nuclear facility (Slovic 2007 [DIRS 184156]).]

29.1.2 System Classification

The cask/canister/waste package process system has been classified as ITS. The cask cooling subsystem in the WHF is ITS. The cask cavity gas sampling; cask, canister, and waste package inerting; decontamination water treatment; waste package survey; waste package decontamination; and TAD canister drying are non-ITS. The cask/canister/waste package process system does not include SSCs that are ITWI.

[Preclosure NSDB (BSC 2008 [DIRS 184200]), Appendix A, Table A-1 specifically provides the classification of the system.]

29.2 Functional and Performance Requirements and Bases

29.2.1 Mission Requirements

29.2.1.1 Transportation Cask Cavity Gas Sampling

The cask/canister/waste package process system shall perform transportation cask cavity gas sampling in the WHF.

[Engineering Study Transportation Cask Gas Sampling Requirements Analysis (BSC 2007 [DIRS 181530]). This is a derived functional requirement based on the need to receive and open transportation casks. Although the study only requires gas-sampling in the WHF, project direction is to have the capability in each nuclear facility (Slovic 2007 [DIRS 184156]).]

29.2.1.2 TAD Drying and Inerting

All TAD canisters shall be vacuum dried and backfilled with helium in a manner consistent with that described in *Standard Review Plan for Dry Cask Storage Systems,* NUREG-1536 (NRC 1997 [DIRS 101903]), Section 8.V.1).

[Postclosure Modeling and Analyses Design Parameters (BSC 2008 [DIRS 183627]), Table 1, item # 04-04. This criterion is based on the need to provide cladding oxidation protection for SNF within TADs that were loaded in the WHF pool, and oxidation protection for the TAD exterior in the WHF and CRCFs.]

29.2.1.3 Waste Package Drying and Inerting

All waste packages shall be vacuum dried and backfilled with helium in a manner consistent with that described in *Standard Review Plan for Dry Cask Storage Systems,* NUREG-1536 (NRC 1997 [DIRS 101903]), Section 8.V.1).

[Postclosure Modeling and Analyses Design Parameters (BSC 2008 [DIRS 183627]), Table 1, item # 03-26.]

29.2.1.4 Deleted

[The previous STC drying requirement was deleted because it was determined that the STC is free-breathing and cannot be forcibly dried.]

29.2.1.5 DPC Cavity Gas Sampling

The cask/canister/waste package process system shall perform DPC cavity gas sampling.

[Engineering Study Transportation Cask Gas Sampling Requirements Analysis (BSC 2007 [DIRS 181530]). This is a derived functional requirement based on the need to detect failed SNF prior to opening the DPC.]

29.2.1.6 Venting

The cask/canister/waste package process system shall include the capability to vent and purge transportation cask and DPC cavity gases.

[Engineering Study Transportation Cask Gas Sampling Requirements Analysis (BSC 2007 [DIRS 181530]). For ALARA considerations, it is prudent to vent the transportation cask/canister/waste package and DPC cavity radioactive gases through a capture system that will implement radioactive decay and disposal of such cavity radioactive gases.]

29.2.1.7 Cooling

The cask/canister/waste package system shall cool the transportation cask/DPC and fill them with water prior to placing the cask/DPC into the WHF pool.

[This is a derived requirement knowing that the casks and DPCs will be thermally hot at receipt. The casks/DPCs are cooling and filled with water before being placed in the WHF pool to prevent a steam explosion or a rapid release of gas from the casks and DPCs.]

29.2.1.8 TAD Systems

The cask/canister/waste package process system shall be designed to accommodate the TAD canisters, TAD aging overpacks, and the TAD transportation cask system components, which are described by the *Transportation, Aging, and Disposal Canister System Performance Specification* (DOE 2007 [DIRS 181403]).

[The MGR-RD [DIRS 177491], Section 3.1.2.F provides direction to include the TAD canisters.]

29.2.2 General Requirements

29.2.2.1 Recycled Water Quality

The decontamination water treatment shall include the collection, treatment, and distribution of water used for decontamination of equipment and components.

[Opening transportation casks, opening DPCs, and handling SNF assemblies are crud releasing activities. This treatment will work towards the repository's ALARA goals.]

29.2.2.2 Airborne Material Control

Radioactive airborne materials from cask cavity gas sampling, cask inerting, cask cooling, and TAD drying shall be collected or controlled so as to minimize exposures to operating personnel and discharged so as to minimize the release of radioactive material to the environment and reduce worker and public doses.

[This is a derived requirement knowing that each cask venting will produce some gases and other process will move radioactive material. Although this requirement used to address SNF assembly drying, assemblies are no longer dried outside of the TADs - thus the requirement was changed. In addition, the reference to the LLRWMS for collecting the discharges was eliminated to allow discharging these contaminated gas stream within the filtered HVAC systems. A statement was added to address minimizing exposures to operations personnel during the activities.]

29.2.3 Safety and Protection Requirements

29.2.3.1 Cask Cooling

The cask cooling subsystem shall protect against cask failure due to overpressure (safety function).

- The mean probability of an overpressure of a cask during sampling/cooling phase shall be less than or equal to 8.0×10^{-06} per cask or canister.

[Preclosure NSDB (BSC 2008 [DIRS 184200]) Appendix A, Table E-1, Item MR.WH.01.]

29.2.4 Miscellaneous Requirements

There are no identified requirements for this section. As requirements are identified in the future, they will be added.

29.3 Conformance Verification

Table 29-1. Cask/Canister/Waste Package Process Conformance Verification

Criterion		Preliminary Verification Method					
Number	**Description**	**N/A**	**Analysis**	**Exam**	**Demo**	**Review**	**Test**
29.2.1.1	Transportation Cask Cavity Gas Sampling					X	
29.2.1.2	TAD Drying and Inerting					X	
29.2.1.3	Waste Package Drying and Inerting					X	
29.2.1.4	Deleted	--	--	--	--	--	--
29.2.1.5	DPC Cavity Gas Sampling					X	
29.2.1.6	Venting					X	
29.2.1.7	Cooling					X	
29.2.1.8	TAD Systems					X	
29.2.2.1	Recycled Water Quality		X				
29.2.2.2	Airborne Material Control					X	
29.2.3.1	Cask Cooling		X				

30 Low-Level Radioactive Waste Management System

30.1 Overview

30.1.1 Introduction

The Low Level Waste (LLW) management system (LLWMS) collects, processes, and disposes LLW streams generated during handling of HLW and SNF at the repository. The LLW management system separates the LLW streams from non-radioactive waste streams. The following subsystems are included in the LLWMS:

- Solid LLW subsystem, which includes dry solid LLW, wet solid LLW, and empty DPCs/waste packages
- Liquid LLW subsystem
- Gaseous LLW subsystem
- Mixed waste subsystem.

The solid LLW subsystem manages site-generated radioactive waste that is collected, stored, and packaged for transport to government approved offsite facilities for disposal in accordance with applicable safety, health, environmental regulations, and disposal site waste acceptance criteria. The solid LLW subsystem provides for the management of spent DPCs and waste packages transferred to the LLW management system after having the contents removed by the mechanical handling system. The solid LLW subsystem provides for the treatment of the waste streams (on-site or off-site) to provide stable waste forms that meet the DOT requirements and waste acceptance criteria of the disposal facility.

The liquid LLW subsystem provides capability to safely collecting and managing site-generated radioactive liquids.

The gaseous LLW subsystem provides capability to safely manage gaseous LLW streams produced by the LLW generating systems by ensuring containment, filtering and release to the HVAC subsystem. The gases are generated by transportation cask cavity gas sampling and inerting of waste packages and transportation casks and the cooling of transportation casks, and SNF assembly drying. Although this requirement used to address SNF assembly drying, assemblies are no longer dried outside of the TADs, thus the requirement was changed.

The mixed waste subsystem provides capability to safely collect and manage any mixed waste that may be generated.

30.1.2 System Classification

The low-level radioactive waste management system has been classified as non-ITS. The low-level radioactive waste management system does not include SSCs that are ITWI.

[Preclosure NSDB (BSC 2008 [DIRS 184200]), Appendix A, Table A-1 specifically provides the classification of the system.]

30.2 Functional and Performance Requirements and Bases

30.2.1 Mission Requirements

30.2.1.1 Environmental Protection

The LLW management system shall manage hazardous, nonhazardous, radioactive, and mixed wastes, if applicable, generated during onsite operations in a cost effective manner that meets or exceeds compliance with applicable regulations and protects the health and safety of the public, workers, and the environment, consistent with DOE O 450.1, *Environmental Protection Program* [DIRS 176641].

[CRD (DOE 2007 [DIRS 182960]), Section 3.2.1J as flowed down through MGR-RD [DIRS 177491], Section 3.1.1.Q. Although the CRD contains text edits, the MGR-RD has not promulgated them yet.]

30.2.1.2 LLW Collection and Disposal

The LLW management system shall provide facilities and means to collect, store, categorize, and ship LLW from the repository to an approved disposal facility in a manner that ensures protection of the health and safety of the worker, public, and the environment.

[PO&PR (BSC 2008 [DIRS 185008]), Section 3.3.1.]

30.2.1.3 LLW Waste Separation

The LLW management system shall maintain a separation of waste to minimize the generation of LLW waste.

[The MGR facilities shall manage hazardous, nonhazardous, and mixed radioactive wastes.]

30.2.1.4 Mixed Waste Separation

The LLW management system shall maintain a separation of LLW and hazardous waste to minimize the generation of mixed waste.

[The MGR facilities shall manage hazardous, nonhazardous, and mixed radioactive wastes.]

30.2.1.5 LLW Management of Radioactive Waste

The LLW management system shall manage low-level radioactive waste generated by repository operations in accordance with the requirements of DOE O 435.1 [DIRS 172422].

[CRD (DOE 2007 [DIRS 182960]), Section 3.2.1G provides for managing process associated site-generated waste stream and is flowed down through MGR-RD [DIRS 177491], Sections 3.1.1.P. MGR-RD Section 3.1.1.AA provides reference to DOE O 435.1.]

30.2.2 General Requirements

30.2.2.1 Solid LLW Management

The solid LLW subsystem shall provide the capability to safely collect, handle, and manage site-generated solid LLW, including dry solid LLW, wet solid LLW, and empty DPCs/waste packages for off-site disposal.

[The MGR facilities shall manage hazardous, nonhazardous, and mixed radioactive wastes.]

30.2.2.2 Solid LLW Disposal

The solid LLW subsystem shall provide for the selection of suitable shipping containers and the transportation of site-generated solid LLW for offsite disposal.

[49 CFR 173 [DIRS 184242].]

30.2.2.3 Gaseous LLW Management

The gaseous LLW subsystem shall ensure that the capability exists to manage gaseous LLW streams generated at the repository. The gaseous LLW subsystem shall ensure that gases generated at the repository are properly contained, filtered, and released.

[Although a specific gas collection system may not be warranted, the collection or exhausting of gases from occupied spaces, as a minimum, welding areas, cask venting and gas sampling operations, is necessary to reduce personnel exposure.]

30.2.2.4 Surface LLW Collection

The LLW management system shall collect for disposal any LLW that is generated by the waste package preparation and closure operations.

[The MGR facilities shall manage hazardous, nonhazardous, and mixed radioactive wastes.]

30.2.2.5 Subsurface LLW Collection

Site-generated LLW produced in the Subsurface Facility shall be collected in suitable containers and brought to the surface for processing and disposal.

[The MGR facilities shall manage hazardous, nonhazardous, and mixed radioactive wastes.]

30.2.2.6 Fire Water Collection and Treatment

The LLW management system shall ensure that the discharged fire water is segregated from LLW, collected, treated, and recycled for use within the surface facilities. Any contaminated material or liquid generated during treatment of the collected fire water shall be stabilized.

[Fire suppression systems in radiologically contaminated areas where SNF and HLW are handled will generate this waste stream and require collection and treatment.]

30.2.2.7 Waste HVAC Filter Disposal

The LLW management system shall collect and dispose the radioactively contaminated waste HVAC filters used in the exhaust HEPA filter plenums, air handling units, and fan coil units.

[Filter generation is a byproduct of repository SNF and HLW handling operations.]

30.2.3 Safety and Protection Requirements

30.2.3.1 LLW Management System Fire Protection

The LLW management system shall be designed and operated to minimize fire hazards and include controls necessary for explosion protection.

[The MGR facilities shall manage hazardous, nonhazardous, and mixed radioactive wastes.]

30.2.4 Miscellaneous Requirements

There are no identified requirements for this section. As requirements are identified in the future, they will be added.

30.3 Conformance Verification

Table 30-1. Low-Level Radioactive Waste Management Conformance Verification

Criterion		Preliminary Verification Method					
Number	Description	N/A	Analysis	Exam	Demo	Review	Test
30.2.1.1	Environmental Protection					X	
30.2.1.2	LLW Collection and Disposal					X	
30.2.1.3	LLW Waste Separation					X	
30.2.1.4	Mixed Waste Separation					X	
30.2.1.5	LLW Management of Radioactive Waste					X	
30.2.2.1	Solid LLW Management					X	
30.2.2.2	Solid LLW Disposal					X	
30.2.2.3	Gaseous LLW Management					X	
30.2.2.4	Surface LLW Collection					X	
30.2.2.5	Subsurface LLW Collection					X	
30.2.2.6	Fire Water Collection and Treatment					X	
30.2.2.7	Waste HVAC Filter Disposal					X	
30.2.3.1	LLW Management System Fire Protection					X	

31 Non-Radiological Waste Management System

31.1 Overview

31.1.1 Introduction

The NRWMS monitors, collects, handles, packages, and prepares for disposal of all non-radioactive waste products. The NRWMS performs this function regardless of the type of waste product-hazardous or non-hazardous. If the waste products are determined to be hazardous, then the waste products are sent to an off-site, facility that has been appropriately permitted for the treatment, storage, and disposal facilities of hazardous waste. If the waste products are determine to be non-hazardous, the waste products can be sent to either an on-site or off-site facility. The NRWMS consists of two major subsystems:

- Hazardous waste subsystem
- Non-hazardous waste subsystem

The hazardous waste subsystem ensures the capability to manage site-generated Resource Conservation and Recovery Act of 1976 [DIRS 103936] RCRA hazardous waste in compliance with applicable provisions of 40 CFR 262 [DIRS 177843]. The hazardous waste subsystem maintains a separation of hazardous waste from non-hazardous waste and from site generated low-level radioactive waste. This prevents the generation of additional hazardous waste and mixed waste in routine operations.

The non-hazardous waste subsystem ensures the capability to handle all non-hazardous waste generated at the repository (i.e. used oil, used anti-freeze, sanitary sewage, waste water, and storm water).

Each of these two subsystems includes facilities and functions for collection, handling, and disposal of the applicable types of site-generated non-radiological waste.

31.1.2 System Classification

The non-radiological waste management system has been classified as non-ITS. The non-radiological waste management system does not include SSCs that are ITWI.

[Preclosure NSDB (BSC 2008 [DIRS 184200]), Appendix A, Table A-1 specifically provides the classification of the system.]

31.2 Functional and Performance Requirements and Bases

31.2.1 Mission Requirements

31.2.1.1 Environmental Protection

The non-radiological waste management system shall manage hazardous and nonhazardous wastes generated during onsite operations in a cost effective manner that meets or exceeds compliance with applicable regulations and protects the health and safety of the public, workers, and the environment, consistent with DOE O 450.1, *Environmental Protection Program* [DIRS 176641].

[CRD (DOE 2007 [DIRS 182960]), Section 3.2.1J as flowed down through MGR-RD [DIRS 177491], Section 3.1.1.Q. Although the CRD text was changed, it does not affect this SSC.]

31.2.1.2 Mixed Waste Segregation

The hazardous waste subsystem shall maintain the separation of site-generated hazardous, non-hazardous, and LLW to prevent the generation of mixed waste and non-permitted treatment of hazardous waste by ensuring that the design of the operation area includes areas for the segregation of the different waste types.

[The MGR facilities shall manage hazardous, nonhazardous, and mixed radioactive wastes.]

31.2.1.3 Nonhazardous Solid Waste Disposal

The non-radiological waste management system shall manage and dispose of repository-generated solid, nonhazardous waste in compliance with the Resource Conservation and Recovery Act of 1976 [DIRS 103936] as implemented in applicable regulations, including 40 CFR 243 [DIRS 184246], 40 CFR 246 [DIRS 184247] and 40

CFR 262 [DIRS 177843].

[MGR-RD [DIRS 177491], Section 3.1.1.AB , 40 CFR 243 [DIRS 184246], 40 CFR 246 [DIRS 184247], and 40 CFR 262 [DIRS 177843].]

31.2.2 General Requirements

31.2.2.1 Storm Water Drainage

The storm water drainage system (including capture of fire water) shall collect run-off from improved areas and include individual building-specific water/oil separators with a sampling point at or near the discharge and a detention basin that captures the storm water (including fire water) from the storm drainage system.

[Paving or sealing the disturbed areas creates a situation where a storm water collection system is required to minimize the hydraulic effects of water runoff. Specific criteria are included in the PDC (BSC 2007 [DIRS 179641]). Detention ponds should also function as a secondary containment device for accidental parking lot spills.]

31.2.2.2 Industrial Wastewater

The non-radiological waste management system shall manage industrial wastewater from the surface and subsurface facilities. This system shall also be sufficient to support the REMY needs. If practical from the viewpoint of grade for a gravity feed system, wastewater treatment will be provided for the REMY by the repository.

[The repository facilities shall manage hazardous, nonhazardous, and mixed radioactive wastes. IICD Volume 2 (DOE 2007 [DIRS 176810]), Section 3.1.16.4 specifically calls for supporting the REMY.]

31.2.2.3 Management of Used Solvents

The non-radiological waste management system shall manage used solvents.

[The MGR facilities shall manage hazardous, nonhazardous, and mixed radioactive wastes.]

31.2.2.4 Universal Waste

The non-radiological waste management system shall manage universal waste.

[The MGR facilities shall manage hazardous, nonhazardous, and mixed radioactive wastes.]

31.2.2.5 Oil Contamination

The repository shall provide for the collection and processing of oil contaminated water from the subsurface and surface facilities to prevent pollution of the water drainage system.

[40 CFR 112.12 [DIRS 184243].]

31.2.3 Safety and Protection Requirements

There are no identified requirements for this section. As requirements are identified in the future, they will be added.

31.2.4 Miscellaneous Requirements

There are no identified requirements for this section. As requirements are identified in the future, they will be added.

31.3 Conformance Verification

Table 31-1 Non-Radioactive Waste Management Conformance Verification

Criterion		Preliminary Verification Method					
Number	**Description**	**N/A**	**Analysis**	**Exam**	**Demo**	**Review**	**Test**
31.2.1.1	Environmental Protection					X	
31.2.1.2	Mixed Waste Segregation					X	
31.2.1.3	Nonhazardous Solid Waste Disposal					X	
31.2.2.1	Storm Water Drainage					X	
31.2.2.2	Industrial Wastewater					X	
31.2.2.3	Management of Used Solvents					X	
31.2.2.4	Universal Waste					X	
31.2.2.5	Oil Contamination					X	

32 Pool Water Treatment And Cooling System

32.1 Overview

32.1.1 Introduction

The pool water treatment and cooling system is used to maintain proper characteristics of the pool water including temperature, chemistry, clarity, and boron concentration. Cleanliness of the pool water will reduce the exposures of workers in close proximity to the pool. The pool water treatment and cooling system ensures that leakage in a pool system will be detected. Waste generated by the pool cleanup system shall be collected and segregated. Treatment of decontamination water is not part of the function of the WHF pool.

32.1.2 System Classification

The pool water treatment and cooling system has been classified non-ITS. The pool water treatment and cooling system does not include SSCs that are ITWI.

[Preclosure NSDB (BSC 2008 [DIRS 184200]), Appendix A, Table A-1 specifically provides the classification of the system. None of the additional equipment identified in TMRB-2007-021 (BSC 2007 [DIRS 181574]) is expected to be required to prevent or mitigate event sequences and therefore is not expected to be ITS. However, the concentration of boron in the WHF pool required to prevent criticality event sequences is expected to be ITS and likely will also be a technical specification for the operation of the WHF.]

32.2 Functional and Performance Requirements and Bases

32.2.1 Mission Requirements

32.2.1.1 Pool Boration

Provide a soluble neutron absorber in the WHF pool by borating the pool water to a range of 2,000 to 2,500 ppm. The WHF pool cooling and cleanup system shall provide chemical addition equipment and provide means to flush the WHF pool liner leak chases.

[This requirement is recommended and approved by TMRB-2007-021 (BSC 2007 [DIRS 181574]). Boration alleviates technical risks associated with other options analyzed. Borating the WHF pool water is a proven design practice in commercial pressurized water reactor (PWR) plants to prevent criticality events. Boric acid is added to the primary coolant and spent fuel pool of PWRs for control of reactivity. A boron concentration in the range of 2000 to 2500 ppm in the WHF pool will provide sufficient negative reactivity to ensure subcriticality for all potential credible event sequence in the WHF pool. Flushing will prevent the chases from becoming plugged with boric acid that would come out of solution in the event of a leak.]

32.2.2 General Requirements

32.2.2.1 Cladding Protection

The pool water treatment and cooling system shall ensure the proper characteristics of the pool water, including temperature, chemistry, radioactivity, and clarity to support remediation operations and maintain assembly cladding during storage/staging in the pool.

[ANSI/ANS-57.7-1988 (R1997) [DIRS 177851], Section 6.3 provides design criteria for systems and equipment for spent fuel storage cooling.]

32.2.2.2 Decay Heat Removal

The pool water treatment and cooling system shall include equipment for the removal of decay heat from the pool water.

[ANSI/ANS-57.7-1988 (R1997), [DIRS 177851], Section 6.3, provides design criteria for systems and equipment for spent fuel storage cooling.]

32.2.3 Safety and Protection Requirements

There are no identified requirements for this section. As requirements are identified in the future, they will be added.

32.2.4 Miscellaneous Requirements

There are no identified requirements for this section. As requirements are identified in the future, they will be added.

32.3 Conformance Verification

Table 32-1. Pool Water Treatment and Cooling Conformance Verification

Criterion		Preliminary Verification Method					
Number	**Description**	**N/A**	**Analysis**	**Exam**	**Demo**	**Review**	**Test**
32.2.1.1	Pool Boration						X
32.2.2.1	Cladding Protection		X				
32.2.2.2	Decay Heat Removal		X				

33 TAD Canister-Based System

33.1 Overview

33.1.1 Introduction

The TAD canister-based system provides for the packaging and transportation shipment of the bulk of the commercial SNF from nuclear power plant to the repository. The components of the TAD canister-based system include: TAD canister, transportation casks, transportation cask skid, cask ancillary equipment**,** aging overpacks, shielded transfer casks (STCs), and site transporters. The TAD system requires integrated operations that occur in the fuel handling buildings at nuclear power plants and in the waste handling facilities at the repository. The TAD canisters are loaded with fuel bundles at a nuclear power plant, sealed, and transported to the repository where they are received in the Receipt Facility and CRCFs. The WHF receives transportation casks with bare fuel, which is placed in TAD canisters, sealed and sent to the CRCFs or the Aging Facility. The CRCFs receive the TAD canisters from the WHF, the Receipt Facility or the Aging Facility and packages them for disposal. The Aging Facility stores TAD canisters until determined ready for disposal.

For transportation to the repository, a loaded TAD canister will be inserted into its transportation cask at a 10 CFR 50 [DIRS 181964] licensed facility and in accordance with loading requirements under 10 CFR 71 [DIRS 181967], and the transportation package will then be shipped to the repository.

33.1.2 System Classification

The TAD canister-based system includes (a) the TAD canister that is credited for maintaining waste form container integrity and preventing criticality; (b) the transportation cask that also maintains container integrity, prevents criticality, and maintains personnel shielding; (c) the standard rail cask skid and (d) transportation auxiliary equipment for the cask. The TAD canisters and transportation casks are ITS, while skid and auxiliary equipment are non-ITS. The TAD canisters are ITWI.

[Preclosure NSDB (BSC 2008 [DIRS 184200]), Appendix A, Table A-1 specifically provides the classification of the TAD canisters and the transportation casks. Components provided by repository Mechanical Handling are classified in Chapter 13.]

33.2 Functional and Performance Requirements and Bases

The requirements in this chapter are organized differently than in the preceding chapters. They are grouped strictly by component without differentiation between type of requirement, such as mission, general, etc. This chapter will start with the TAD canister, then the cask, then the other components.

Although, DOE CO Letter 07-005 (Hamilton-Ray 2006 [DIRS 178596]) and the amendment (Hamilton-Ray 2006 [DIRS 178597]) identified the two performance specification reports and directed that they be used to identify TAD canister system component requirements, this letter was superseded by the *Transportation, Aging, and Disposal Canister System Performance Specification* (DOE 2007 [DIRS 181403]. CRD (DOE 2007 [DIRS 182960]), Section 3.2.1L specifically provides direction to comply with the TAD specification.

33.2.1 TAD System Requirements

33.2.1.1 TAD System Components

The TAD system components shall meet the performance objectives of *Transportation, Aging, and Disposal Canister System Performance Specification* (DOE 2007 [DIRS 181403]). When necessary, the TAD canister, site transporter, ancillary equipment (TAD system components) will work in conjunction with the STC to meet the performance objectives.

[Transportation, Aging, and Disposal Canister System Performance Specification (DOE 2007 [DIRS 181403]).]

33.2.2 TAD Canister Requirements

33.2.2.1 TAD Dimensional Envelope

The TAD canister shall be a right circular cylinder with a diameter of 66.5 inches (-0.0 in. / +0.5 in.). The TAD canister height shall not be less than 186.0 inches and not greater than 212.0 inches including the lifting feature shown in Attachment C of the *Transportation, Aging, and Disposal Canister System Performance Specification*

(DOE 2007 [DIRS 181403]), considering all relevant factors (e.g., tolerance stack-up, thermal expansion, internal pressure).

a. For a TAD canister with a height less than the maximum, a TAD waste package spacer (TWPS) meeting requirements in Sections 33.2.2.17 through 33.2.2.20 shall be included. If required, the TWPS shall have a diameter of 66.5 inches (-0.0 in. / +0.5 in.) and length such that the combined height of the TWPS and TAD canister shall be 212.0 inches (-0.0 in. / +0.5 in.) considering all relevant factors (e.g., tolerance stack-up, thermal expansion, internal pressure).

b. If required, the TWPS shall be placed in a waste package prior to loading of the TAD canister for disposal. The TWPS function is to restrict axial motion of the TAD canister within the waste package after emplacement..

[Transportation, Aging, and Disposal Canister System Performance Specification (DOE 2007 [DIRS 181403]), Section 3.1.1(1).]

33.2.2.2 TAD Loaded Weight

The TAD canister loaded weight shall be consistent with the height determined in accordance with Section 33.2.2.1. The combined weight of the loaded TAD canister and TWPS shall not exceed 108,500 lbs (54.25 tons).

[Transportation, Aging, and Disposal Canister System Performance Specification (DOE 2007 [DIRS 181403]), Section 3.1.1(2).]

33.2.2.3 TAD Capacity

The capacity of the TAD canister shall be either 21 pressurized water reactor (PWR) spent fuel assemblies or 44 boiling water reactor (BWR) spent fuel assemblies.

[Transportation, Aging, and Disposal Canister System Performance Specification (DOE 2007 [DIRS 181403]), Section 3.1.1(3).]

33.2.2.4 TAD Opening Methodology

The loaded and closed TAD canister shall be capable of being reopened while submerged in a borated or unborated pool.

[Transportation, Aging, and Disposal Canister System Performance Specification (DOE 2007 [DIRS 181403]), Section 3.1.1(4).]

33.2.2.5 Bounding PWR Characteristics

A TAD canister for PWR assemblies shall be limited to accepting CSNF with characteristics less than 5% initial enrichment, less than 80 GWd/MTU burn up and no less than 5 years out-of-reactor cooling time.

[Transportation, Aging, and Disposal Canister System Performance Specification (DOE 2007 [DIRS 181403]), Section 3.1.1(5). These characteristics represent bounding PWR characteristics used in the repository design basis and provide enveloping conditions for repository shielding, thermal and dose consequence analysis. The Postclosure Modeling and Analysis Design Parameters (BSC 2008 [DIRS 183627]), Table 1, item # 03-09 provides for only the PWR statement and item # 04-03 indicates the 80 GWd/MTU is bounded by the PWR burnup.]

33.2.2.6 Bounding BWR Characteristics

A TAD canister for BWR assemblies shall be limited to accepting CSNF with characteristics less than 5% initial enrichment, less than 75 GWd/MTU burnup and no less than 5 years out-of-reactor cooling time.

[Transportation, Aging, and Disposal Canister System Performance Specification (DOE 2007 [DIRS 181403]), Section 3.1.1(6). These characteristics represent bounding BWR characteristics used in the repository design basis and provide enveloping conditions for the repository shielding, thermal and dose consequence analysis.]

33.2.2.7 TAD Loading

A TAD canister shall be capable of being loaded with CSNF from one or more facilities that are licensed by the NRC and hold one or more contracts with the DOE for disposal of CSNF.

[Transportation, Aging, and Disposal Canister System Performance Specification (DOE 2007 [DIRS 181403]), Section 3.1.1(7).]

33.2.2.8 TAD External Edges

All external edges of the TAD canister shall have a minimum radius of curvature of 0.25 inch.

[Transportation, Aging, and Disposal Canister System Performance Specification (DOE 2007 [DIRS 181403]), Section 3.1.1(8).]

33.2.2.9 TAD Projections and Protuberances

To the extent practicable, projections or protuberances from reasonably smooth adjacent surfaces shall be avoided or smoothly blended into the adjacent smooth surfaces.

[Transportation, Aging, and Disposal Canister System Performance Specification (DOE 2007 [DIRS 181403]), Section 3.1.1(9).]

33.2.2.10 TAD Storage Orientation

The TAD canister shall be designed to store vendor defined design basis CSNF at a purchaser site in accordance with 10 CFR 72 [DIRS 181968] in either a horizontal or vertical orientation.

[Transportation, Aging, and Disposal Canister System Performance Specification (DOE 2007 [DIRS 181403]), Section 3.1.1.(10).]

33.2.2.11 TAD Transportation Orientation

A TAD canister shall be designed to transport vendor defined design basis CSNF to the GROA in a horizontal configuration.

[Transportation, Aging, and Disposal Canister System Performance Specification (DOE 2007 [DIRS 181403]), Section 3.1.1(11).]

33.2.2.12 TAD Disposal in Waste Package

A TAD canister shall be designed to dispose of vendor defined design basis CSNF in a waste package in a horizontal configuration.

[Transportation, Aging, and Disposal Canister System Performance Specification (DOE 2007 [DIRS 181403]), Section 3.1.1(12).]

33.2.2.13 TAD Handling Configuration

A TAD canister shall be designed to be handled at the GROA loaded with vendor defined design basis CSNF in a vertical configuration.

[Transportation, Aging, and Disposal Canister System Performance Specification (DOE 2007 [DIRS 181403]), Section 3.1.1(13).]

33.2.2.14 TAD Aging Configuration

A TAD canister shall be designed to age vendor defined design basis CSNF in a vertical configuration.

[Transportation, Aging, and Disposal Canister System Performance Specification (DOE 2007 [DIRS 181403]), Section 3.1.1(14).]

33.2.2.15 TAD Service Life

At the time of delivery to the repository, a loaded TAD canister shall have a remaining service lifetime for aging of 50 years without maintenance.

[Transportation, Aging, and Disposal Canister System Performance Specification (DOE 2007 [DIRS 181403]),

Section 3.1.1(15). Prior to delivery to the repository, a loaded TAD canister may have been stored at a reactor site for up to 60 years.]

33.2.2.16 TAD Environmental Conditions

The service lifetime environmental conditions shall be site appropriate for the period of deployment at reactors. Yucca Mountain environmental conditions apply for repository aging service.

[Transportation, Aging, and Disposal Canister System Performance Specification (DOE 2007 [DIRS 181403]), Section 3.1.1(16).]

33.2.2.17 TWPS Material

The TWPS shall be constructed of materials specified in Section 33.2.2.45.

[Transportation, Aging, and Disposal Canister System Performance Specification (DOE 2007 [DIRS 181403]), Section 3.1.1(17).]

33.2.2.18 TWPS Geometry

The TWPS shall be a right circular cylinder, either solid or hollow with sides and ends formed from plates at least 2 inches thick.

[Transportation, Aging, and Disposal Canister System Performance Specification (DOE 2007 [DIRS 181403]), Section 3.1.1(18).]

33.2.2.19 TWPS Mass Density

The TWPS shall have an average mass density equal to or greater than that of the loaded TAD canister.

[Transportation, Aging, and Disposal Canister System Performance Specification (DOE 2007 [DIRS 181403]), Section 3.1.1(19). The average mass density is determined by dividing the total mass of the TAD canister/TWPS by the volume of a right circular cylinder with same diameter and height.]

33.2.2.20 TWPS Temporary Rigging

The TWPS shall include four (4) threaded holes in its top for the purpose of attaching temporary rigging meeting requirements of NUREG-0612, *Control of Heavy Loads at Nuclear Power Plants* (NRC 1980 [DIRS 104939]) to be used when inserting the TWPS into an otherwise empty waste package.

[Transportation, Aging, and Disposal Canister System Performance Specification (DOE 2007 [DIRS 181403]), Section 3.1.1(20).]

33.2.2.21 TAD Confinement Following 2,000-Year Seismic Event

Following a 2,000-year seismic return period event, a TAD canister shall maintain a maximum leakage rate of 1.5 $\times 10^{-12}$ fraction of canister free volume per second (normal), maximum cladding temperature of 752°F (normal) and remain within design codes while in the configurations described below:

- While suspended by a crane inside an ASTM A 36, *Standard Specification for Carbon Structural Steel* cylindrical steel cavity with an inner diameter of 72.5 inches with 12 inch thick wall.
- While contained in a vendor defined transportation cask (with impact limiters) described in Transportation Cask Section 33.2.3.
- While contained in a vendor defined transportation cask (without impact limiters) described in Transportation Cask Section 33.2.3, that is constrained in an upright position. A constrained transportation cask is one properly secured into GROA transfer trolley and restrained from tip-over in a seismic event.
- While contained in a vendor defined aging overpack as described in Aging Overpack, Section 33.2.4.

[Transportation, Aging, and Disposal Canister System Performance Specification (DOE 2007 [DIRS 181403]), Section 3.1.2(1)(a). This leakage rate meets the leak-tight criterion of ANS/ANSI-N14.5, American National Standard for Radioactive Materials - Leakage Tests on Packages for Shipment [DIRS 145735]. Seismic return vertical and horizontal accelerations are detailed in Attachment A of the Transportation, Aging, and Disposal Canister System Performance Specification. ASTM A 36 is an embedded reference without a date specified. The latest version may be used. No DIRS number is required.]

33.2.2.22 TAD Confinement Following 10,000-Year Seismic Event

Following a 10,000-year seismic return period event, a TAD canister shall maintain a maximum leakage rate of 1.5 × 10^{-12} fraction of canister free volume per second (normal), cladding temperature limit of 1,058°F (off-normal) and remain within design codes while in the configurations described below:

- While suspended by a crane inside an ASTM A 36, *Standard Specification for Carbon Structural Steel* cylindrical steel cavity with an inner diameter of 72.5 inches with 12 inch thick wall.
- While contained in a vendor defined transportation cask (with impact limiters) described in Transportation Cask Section 33.2.3.
- While contained in a vendor defined transportation cask (without impact limiters) described in Transportation Cask Section 33.2.3, that is constrained in an upright position. A constrained transportation cask is one properly secured into GROA transfer trolley and restrained from tip-over in a seismic event.
- While contained in a vendor defined aging overpack as described in Aging Overpack Section 33.2.4.

[Transportation, Aging, and Disposal Canister System Performance Specification (DOE 2007 [DIRS 181403]), Section 3.1.2(1)(b). This leakage rate meets the leak-tight criterion of ANS/ANSI-N14.5 [DIRS 145735], American National Standard for Radioactive Materials - Leakage Tests on Packages for Shipment. Seismic return vertical and horizontal accelerations are detailed in Attachment A of the Transportation, Aging, and Disposal Canister System Performance Specification. ASTM A 36 is an embedded reference without a date specified. The latest version may be used. No DIRS number is required.]

33.2.2.23 TAD Confinement Following Peak Acceleration

Following a seismic event characterized by horizontal and vertical peak ground accelerations of 96.52 ft/sec^2 (3g), a TAD canister shall maintain a maximum leakage rate of 1.5 × 10^{-12} fraction of canister free volume per second (normal) while in the configurations described below. For this initiating event, canister design codes may be exceeded (i.e., vendor may rely on capacity in excess of code allowances):

- A TAD canister in a vendor defined transportation cask described in Transportation Cask Section 33.2.3, that drops 10 feet onto an unyielding surface in the most damaging orientation. The transportation cask configuration shall be with or without impact limiters.
- While contained in a vendor defined transportation cask (without impact limiters) described in Transportation Cask Section 33.2.3, that is constrained in an upright position. A constrained transportation cask is one properly secured into GROA transfer trolley and restrained from tip-over in a seismic event.
- While contained in a vendor defined aging overpack as described in Aging Overpack Section 33.2.4.

[Transportation, Aging, and Disposal Canister System Performance Specification (DOE 2007 [DIRS 181403]), Section 3.1.2(1)(c). This leakage rate meets the leak-tight criterion of ANS/ANSI-N14.5 [DIRS 145735], American National Standard for Radioactive Materials - Leakage Tests on Packages for Shipment. Seismic return vertical and horizontal accelerations are detailed in Attachment A of the Transportation, Aging, and Disposal Canister System Performance Specification.]

33.2.2.24 TAD Confinement Following Environmental Exposure

A TAD canister in an aging overpack shall maintain a maximum leakage rate of 1.5 × 10^{-12} fraction of canister free volume per second (normal) and cladding temperature limits (see inset) during and following exposure to the environmental conditions listed below. For items "a" through "e", the cladding temperature limits are 752°F and 1,058°F for “normal” and “off-normal” limits, respectively.

a. These environmental conditions are not cumulative but occur independently:
   - Outdoor average daily temperature range of 2º F to 116º F with insolation as specified in 10 CFR 71 [DIRS 181967] (normal)
   - An extreme wind gust of 120 mph for 3-sec (normal)
   - Maximum tornado wind speed of 189 mph with a corresponding pressure drop of 0.81 lb/in^2 and a rate of pressure drop of 0.30 lb/in^2/sec (off-normal). The spectrum of missiles from the maximum tornado is provided in Table 33-1 (off-normal):

Table 33-1 Spectrum Missiles

Missile	Mass (lb)	Dimensions (ft)	Hor. Vel. (ft/s)
Wood Plank	114.6	0.301 × 0.948 × 12	190.2

6” Schedule 40 pipe	286.6	0.551D × 15.02	32.8
1 in. steel rod	8.8	0.0833D × 3	26.3
Utility Pole	1,124	1.125D × 35.04	85.3
12” Schedule 40 pipe	749.6	1.05D × 15.02	23.0

b. Annual precipitation of 20 inches/year (normal). The spectrum of rainfall is provided in Table 33-2 (normal):

Table 33-2 Spectrum of Rainfall

Parameter and Frequency	Nominal Estimate	Upper Bound 90% Confidence Interval*
Maximum 24-hr precipitation (50-year return period)	2.79 in./day	3.30 in./day
Maximum 24-hr precipitation (100-year return period)	3.23 in./day	3.84 in./day
Maximum 24-hr precipitation (500-year return period)	4.37 in./day	5.25 in./day
Precipitation 1-hr intensity (50-year return period)	1.35 in./hr	1.72 in./hr
Precipitation 1-hr intensity (100-year return period)	1.68 in./hr	2.15 in./hr

*Use the values for upper bound 90% confidence interval.

c. Maximum daily snowfall of 6.0 in. (normal)
d. Maximum monthly snowfall of 6.6 in. (normal)
e. A lightning strike with a peak current of 250 kiloamps over a period of 260 microseconds and continuous current of 2 kiloamps for 2 seconds (off-normal).

[Transportation, Aging, and Disposal Canister System Performance Specification (DOE 2007 [DIRS 181403]), Section 3.1.2(2). This leakage rate meets the leak-tight criterion of ANS/ANSI-N14.5 [DIRS 145735], American National Standard for Radioactive Materials - Leakage Tests on Packages for Shipment. Seismic return vertical and horizontal accelerations are detailed in Attachment A of the Transportation, Aging, and Disposal Canister System Performance Specification.]

33.2.2.25 TAD in Transportation Cask

A TAD canister in a transportation cask (with impact limiters) shall maintain a maximum leakage rate of 1.5×10^{-12} fraction of canister free volume per second (off-normal) and cladding temperature limits (see inset) during and following exposure to the environmental conditions listed below. For items "a" through "e", the cladding temperature limits are 752°F and 1,058°F for “normal” and “off-normal” limits, respectively.

a. These environmental conditions are not cumulative but occur independently:

- Outdoor average daily temperature range of 2ºF to 116ºF with insolation as specified in 10 CFR 71 [DIRS 181967] (normal)
- An extreme wind gust of 120 mph for 3-sec (normal)
- Maximum tornado wind speed of 189 mph with a corresponding pressure drop of 0.81 lb/in^2 and a rate of pressure drop of 0.30 lb/in^2/sec (off-normal). The spectrum of missiles from the maximum tornado is provided in Table 33-3 (off-normal):

Table 33-3 Spectrum Missiles

Missile	Mass (lb)	Dimensions (ft)	Hor. Vel. (ft/s)
Wood Plank	114.6	0.301 × 0.948 × 12	190.2
6” Schedule 40 pipe	286.6	0.551D × 15.02	32.8
1 in. steel rod	8.8	0.0833D × 3	26.3
Utility Pole	1,124	1.125D × 35.04	85.3
12” Schedule 40 pipe	749.6	1.05D × 15.02	23.0

b. Annual precipitation of 20 inches/year (normal). The spectrum of rainfall is provided in Table 33-4 (normal):

Table 33-4 Spectrum of Rainfall

Parameter and Frequency	Nominal Estimate	Upper Bound 90% Confidence Interval*
Maximum 24-hr precipitation (50-year return period)	2.79 in./day	3.30 in./day
Maximum 24-hr precipitation (100-year return period)	3.23 in./day	3.84 in./day
Maximum 24-hr precipitation (500-year return period)	4.37 in./day	5.25 in./day
Precipitation 1-hr intensity (50-year return period)	1.35 in./hr	1.72 in./hr
Precipitation 1-hr intensity (100-year return period)	1.68 in./hr	2.15 in./hr

*Use the values for upper bound 90% confidence interval

c. Maximum daily snowfall of 6.0 inches (normal)
d. Maximum monthly snowfall of 6.6 inches (normal)
e. A lightning strike with a peak current of 250 kiloamps over a period of 260 microseconds and continuous current of 2 kiloamps for 2 seconds (off-normal).

[Transportation, Aging, and Disposal Canister System Performance Specification (DOE 2007 [DIRS 181403]), Section 3.1.2(3). This leakage rate meets the leak-tight criterion of ANS/ANSI-N14.5, American National Standard for Radioactive Materials - Leakage Tests on Packages for Shipment [DIRS 145735].]

33.2.2.26 TAD Bottom

The TAD canister shall have a flat bottom.

[Transportation, Aging, and Disposal Canister System Performance Specification (DOE 2007 [DIRS 181403]), Section 3.1.2.(4).]

33.2.2.27 TAD Normal Cladding Temperature

Except as noted in Section 33.2.2.28, CSNF cladding temperature in TAD canisters shall not exceed 752 ºF during normal operations. Normal operations include storage at purchaser sites, transportation from purchasers to the GROA and handling at the GROA (e.g., aging, storage, onsite transfer, etc).

[Transportation, Aging, and Disposal Canister System Performance Specification (DOE 2007 [DIRS 181403]), Section 3.1.3(1).]

33.2.2.28 TAD Off-Normal Cladding Temperature

CSNF cladding temperature shall not exceed 1,058ºF during draining, drying and backfill operations following TAD canister loading.

[Transportation, Aging, and Disposal Canister System Performance Specification (DOE 2007 [DIRS 181403]), Section 3.1.3(2).]

33.2.2.29 TAD Leakage Rate After Engulfing Fire

The maximum leakage rate of a TAD canister shall be 9.3×10^{-10} fraction of canister free volume per second (off-normal) after a fully-engulfing fire characterized by an average flame temperature of 1,720 ºF and lasting 30 minutes. During this event the TAD canister is in either a closed vendor defined transportation cask (with or without impact limiters) or an open vendor defined transportation cask without impact limiters.

[Transportation, Aging, and Disposal Canister System Performance Specification (DOE 2007 [DIRS 181403]), Section 3.1.3(3). For this event, canister design codes may be exceeded (i.e., vendor may rely on capacity in excess

of code allowances).]

33.2.2.30 TAD Cooling Features

TAD canister cooling features and mechanisms shall be passive.

[Transportation, Aging, and Disposal Canister System Performance Specification (DOE 2007 [DIRS 181403]), Section 3.1.3(4).]

33.2.2.31 TAD Cladding Temperature in Waste Package

To ensure adequate thermal performance of the TAD canister when emplaced in the waste package, the peak cladding temperature shall be less than 662 ºF for each set of conditions in Table 33-5.

Table 33-5 Thermal Conditions for Cladding Temperature Determination

Thermal Output (kW)	Canister Surface Temperature Boundary Conditions (ºF)
11.8	525
18	450
25	358

[Transportation, Aging, and Disposal Canister System Performance Specification (DOE 2007 [DIRS 181403]), Section 3.1.3(5).]

33.2.2.32 TAD Surface Average Dose Rate

For GROA operations, the combined neutron and gamma integrated average dose rate over the top surface of a loaded TAD canister shall not exceed 800 mrem/hr on contact.

[Transportation, Aging, and Disposal Canister System Performance Specification (DOE 2007 [DIRS 181403]), Section 3.1.4(1).]

33.2.2.33 TAD Surface Maximum Dose Rate

For GROA operations, the combined contact neutron and gamma maximum dose rate at any point on the top surface of the TAD canister shall not exceed 1,000 mrem/hr.

[Transportation, Aging, and Disposal Canister System Performance Specification (DOE 2007 [DIRS 181403]), Section 3.1.4(2).]

33.2.2.34 TAD External Surface Contamination

The TAD canister shall be designed such that contamination on an accessible external surface shall be removable to:

a. 1,000 dpm/100 cm^2 - beta-gamma with a wipe efficiency of 0.1.
b. 20 dpm/100 cm^2 - alpha with a wipe efficiency of 0.1.

[Transportation, Aging, and Disposal Canister System Performance Specification (DOE 2007 [DIRS 181403]), Section 3.1.4(3).]

33.2.2.35 Criticality

The TAD canister shall comply with the criticality requirements in 10 CFR 71, Subpart E, paragraph 55 (b). Postclosure Criticality control shall be maintained by employing either the items in (a) or the analysis in (b), as follows:

a. Include the following features in the TAD canister internals:

   1. Neutron absorber plates or tubes made from borated stainless steel produced by powder metallurgy and meeting ASTM A887-89 [DIRS 178058], *Standard Specification for Borated Stainless Steel Plate, Sheet, and Strip for Nuclear Application,* Grade "A" alloys.
   2. Minimum thickness of neutron absorber plates shall be 0.433 inches. Maximum and nominal thickness may be based on structural requirements. Multiple plates may be used if corrosion assumptions (250 nm/year) are taken into for all surfaces such that 6 mm remains after 10,000 years.
   3. The neutron absorber plate shall have a boron content of 1.1 wt % to 1.2 wt %, a range that falls within

the specification for 304B4 UNS S30464 as described in ASTM A887-89 [DIRS 178058], *Standard Specification for Borated Stainless Steel Plate, Sheet, and Strip for Nuclear Application*.
4. Neutron absorber plates or tubes shall extend along the full length of the active fuel region inclusive of any axial shifting of the assemblies within the TAD canister.
5. Neutron absorber plates or tubes must cover all four longitudinal sides of each fuel assembly.
6. TAD canister designs for PWR fuel assemblies shall accommodate assemblies loaded with a disposal control rod assembly (DCRA) (Note 1). A DCRA is intended for acceptance of PWR CSNF with characteristics outside limits set in the postclosure criticality loading curves. Current postclosure criticality loading curves are shown in Attachment B of *Transportation, Aging, and Disposal Canister System Performance Specification* (DOE 2007 [DIRS 181403]. Updated postclosure criticality loading curves that represent a PWR TAD canister with features described in items 1 through 5 above may be provided at a later date.

b. Perform analyses of TAD canister-based systems to ensure the maximum calculated effective neutron multiplication factor (k_{eff}) (Note 2) for a TAD canister containing the most reactive CSNF for which the design is approved shall not exceed the critical limit (Note 3) for four postclosure archetypical proxy configurations (Notes 4 and 5).

[Transportation, Aging, and Disposal Canister System Performance Specification (DOE 2007 [DIRS 181403]), Section 3.1.5(1) and (2). This criterion also partially satisfies PO&PR (BSC 2008 [DIRS 185008]), Section 2.6.2.

Notes:

1. DCRA is similar to control rod assemblies, reactivity control assemblies, reactivity control cluster assemblies or burnable poison rod assemblies placed in fuel assemblies during irradiation in reactors. A primary difference is extra thick zircaloy cladding, absorber materials that extend beyond the active fuel length and spiders that hold rods have thick zircaloy or titanium locking mechanism(s).
2. The maximum k_{eff} for a configuration is the value at the upper limit of a two-sided 95% confidence interval.
3. The Criticality Model (BSC 2004 [DIRS 168553]), Section 6.3.1, defines critical limit as the value of k_{eff} at which a configuration is considered potentially critical including biases and uncertainties.
4. The Criticality Input to Canister Based System Performance Specification for Disposal (SNL 2007, [DIRS 178236]), Section 3.1 provides a set of considerations for determining the proxy configurations based upon analyses of different, but similar, waste package designs. A list of the four proxy configuration cases are:
a. Nominal case, basket assembly degraded, CSNF intact.
b. Seismic case-I, basket assembly intact, CSNF degraded.
c. Seismic case-II, basket assembly degraded, CSNF degraded.
d. Igneous intrusion case, basket assembly degraded, CSNF degraded, waste package and TAD structural deformation.
5. A system performance assessment is a comprehensive analysis estimating dose incurred by reasonably maximally exposed individual, including associated uncertainties, as a result of repository releases caused by all significant features, events, processes, and sequences of events and processes, weighted by their probability of occurrence.]

33.2.2.36 TAD Confinement Design

The TAD canister design shall meet either of the requirements below.

a. The qualification of the TAD canister final closure welds shall meet SFPO-ISG-18 [DIRS 164538], *Design/Qualification of Final Closure Welds on Austenitic Stainless Steel Canisters as Confinement Boundary for Spent Fuel Storage and Containment Boundary for Spent Fuel Transportation*, for assuring no credible leakage for containment and confinement.

b. The TAD canister shall be designed to facilitate helium leak testing of closure features using methods that can demonstrate the defined leak-tight requirements have been met. Leak testing shall be performed in accordance with ANSI N14.5-97 [DIRS 145735], *American National Standard for Radioactive Materials - Leakage Tests on Packages for Shipment.*

[Transportation, Aging, and Disposal Canister System Performance Specification (DOE 2007 [DIRS 181403]), Section 3.1.6(1).]

33.2.2.37 TAD Fill Gas

Helium shall be the only gas used for final backfill operations.

[Transportation, Aging, and Disposal Canister System Performance Specification (DOE 2007 [DIRS 181403]), Section 3.1.6(2).]

33.2.2.38 TAD Design Codes

TAD canister shell and lid shall be designed and fabricated in accordance with *ASME Boiler and Pressure Vessel Code* [DIRS 171846], Section III, Division 1, Subsection NB (for Class 1 Components). Vendor shall identify applicable exceptions, clarifications, interpretations, and code cases.

[Transportation, Aging, and Disposal Canister System Performance Specification (DOE 2007 [DIRS 181403]), Section 3.1.6(3).]

33.2.2.39 TAD Drying

In accordance with industry standards and regulatory guidance, the TAD canister shall be designed to facilitate the following:

a. Draining and drying to remove water vapor and oxidizing material shall be carried out in accordance with NUREG-1536, *Standard Review Plan for Dry Cask Storage Systems Final Report* [DIRS 101903].

b. Filling with helium to atmospheric pressure or greater as required to meet leak test procedural requirements.

c. Sampling of the gas space to verify helium purity.

d. Limiting maximum allowable oxidizing gas concentration within the loaded and sealed TAD canister to 0.20% of the free volume in the TAD canister at atmospheric pressure.

[Transportation, Aging, and Disposal Canister System Performance Specification (DOE 2007 [DIRS 181403]), Section 3.1.6(4).]

33.2.2.40 TAD Final Closure Design

A loaded TAD canister shall maintain a leakage rate of 1.5×10^{-12} fraction of canister free volume per second (normal) and cladding temperature below 752° F (normal) following a 12 inch vertical flat-bottom drop. The impacted surface is a solid carbon steel plate, simply supported as shown in Figure 33-1. The material conforms to ASTM A 36/A 36M, S*tandard Specification for Carbon Structural Steel*. Centerline of the TAD canister may be offset from centerline of the plate by as much as three (3) inches.

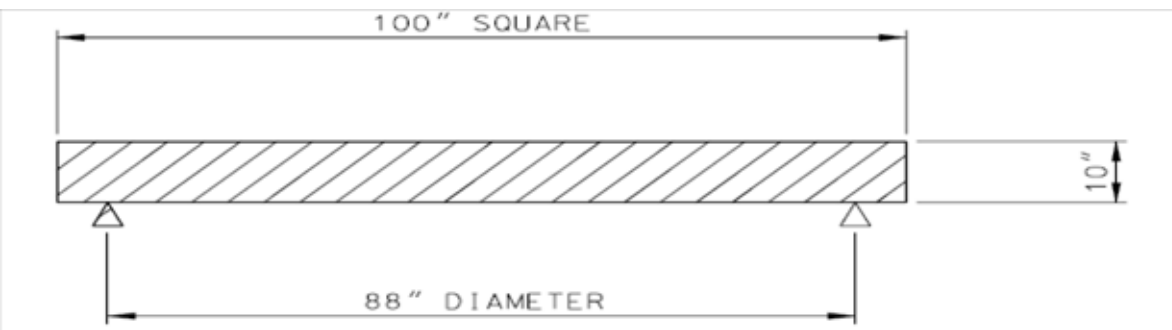

Figure 3.1-1

Figure 33-1

[Transportation, Aging, and Disposal Canister System Performance Specification (DOE 2007 [DIRS 181403]), Section 3.1.6(5), Figure 3.1-1. ASTM A 36 is an embedded reference without a date specified. The latest version may be used. No DIRS number is required.]

33.2.2.41 TAD Underwater Handling

The TAD canister lid shall be designed for handling under water with the TAD canister in a vertical orientation. The TAD canister body and lid shall have features to center and seat the lid during submerged installation. The maximum off-center value is ½ inch.

[Transportation, Aging, and Disposal Canister System Performance Specification (DOE 2007 [DIRS 181403]), Section 3.1.7(1) and (2).]

33.2.2.42 TAD Lifting Feature

A feature for lifting a vertically oriented, loaded TAD canister from the lid shall be provided. The lifting feature may be integral with the lid or mechanically attached. The lifting feature shall be in place and ready for service prior to transport to the repository. A sketch of the lifting feature that shall be used is shown in Attachment C of the *Transportation, Aging, and Disposal Canister System Performance Specification (DOE 2007 [DIRS 181403])*.

[Transportation, Aging, and Disposal Canister System Performance Specification (DOE 2007 [DIRS 181403]), Section 3.1.7(3) and Attachment C.]

33.2.2.43 Open TAD Lifting Feature

An open, empty and vertically oriented TAD canister shall have integral lifting feature(s) provided to allow lifting by an overhead handling system.

[Transportation, Aging, and Disposal Canister System Performance Specification (DOE 2007 [DIRS 181403]), Section 3.1.7(4).]

33.2.2.44 TAD Draining, Drying, and Backfill

The TAD canister shall be designed with features such that draining, drying and backfill operations take advantage of ALARA principles.

[Transportation, Aging, and Disposal Canister System Performance Specification (DOE 2007 [DIRS 181403]), Section 3.1.7(5).]

33.2.2.45 TAD Required Materials

Except for thermal shunts and criticality control materials, the TAD canister and structural internals (i.e., basket) shall be constructed of a Type 300-series stainless steel (UNS S3XXXX, such as UNS S31603, which may also be designated as type 316L) as listed in ASTM A 276-06, *Standard Specification for Stainless Steel Bars and Shapes* [DIRS 176774].

[Transportation, Aging, and Disposal Canister System Performance Specification (DOE 2007 [DIRS 181403]), Section 3.1.8(1).]

33.2.2.46 TAD Compatibility with Pool

The TAD canister and its basket materials shall be designed to be compatible with either borated or unborated repository pool water as defined in Table 33-6, with an average annual pool water temperature of <90°F (Pool water temperature may exceed 110°F for no more than 5% of the time during June, July, August, and September).

Table 33-6 Repository Pool Water Specifications

	Unborated Pool	Borated Pool
Average annual pool water conductivity	<3 μ-mho/cm	<3 μ-mho/cm
Pool water chloride concentration	<0.5 ppm	<0.5 ppm
Pool water pH	5.3 to 7.5	4.5 to 9.0
Pool water boron concentration	-	2000 to 2500 ppm

[Transportation, Aging, and Disposal Canister System Performance Specification (DOE 2007 [DIRS 181403]),

Section 3.1.8(2).]

33.2.2.47 TAD Organic Components

The TAD canister shall not have organic, hydrocarbon-based materials of construction.

[Transportation, Aging, and Disposal Canister System Performance Specification (DOE 2007 [DIRS 181403]), Section 3.1.8(3)(a).]

33.2.2.48 TAD Surface Cleanliness

All metal surfaces shall meet surface cleanliness classification C requirement defined in ASME NQA-1-2000 Edition [DIRS 159544], Subpart 2.1 *Quality Assurance Requirements for Cleaning of Fluid Systems and Associated Components for Nuclear Power Plants*.

[Transportation, Aging, and Disposal Canister System Performance Specification (DOE 2007 [DIRS 181403]), Section 3.1.8(3)(b).]

33.2.2.49 TAD Pyrophoric Materials

The TAD canister shall not be constructed of pyrophoric materials.

[Transportation, Aging, and Disposal Canister System Performance Specification (DOE 2007 [DIRS 181403]), Section 3.1.8(3)(c).]

33.2.2.50 TAD Hazardous Materials

The TAD canister, including the steel matrix, gaskets, seals, adhesives and solder, shall not be constructed with materials that would be regulated as hazardous wastes under the Resource Conservation and Recovery Act (RCRA) [DIRS 103936] and prohibited from land disposal under RCRA if declared to be waste.

[Transportation, Aging, and Disposal Canister System Performance Specification (DOE 2007 [DIRS 181403]), Section 3.1.8(3)(d).]

33.2.2.51 TAD Markings

The TAD canister shall be capable of being marked on the lid and body with an identical unique identifier prior to delivery for loading. The unique identifier space shall be of suitable length and height to contain nine (9) alphanumeric and two (2) special characters (e.g., -, /, "space", etc.) to be specified by the DOE. Alphanumeric characters shall have a minimum height of 6 inches. The markings shall remain legible without intervention or maintenance during/after any of the following events:

- The entire service life defined in Section 33.2.2.15.
- Normal operations to include loading, closure, storage, transportation, aging and disposal.
- Dose, heat and irradiation associated with the vendor defined design basis PWR or BWR, as applicable.

[Transportation, Aging, and Disposal Canister System Performance Specification (DOE 2007 [DIRS 181403]), Section 3.1.8(4).]

33.2.2.52 Probability of Criticality

For the Postclosure period, the engineered barrier system shall be redesigned if the total probability of criticality is not less than one over the 10,000 year regulatory period.

[This requirement is based on 10 CFR 63.114 [DIRS 180319] and Disposal Criticality Analysis Methodology Topical Report (YMP 2003 [DIRS 165505]), Section 3.2.3 discusses the probability of criticality.]

33.2.2.53 TAD Canister

The TAD canister (analyzed as a representative canister) shall be designed to provide for containment (safety functions).

- The mean conditional probability of breach of a representative canister resulting from a:
  - -- drop of the canister shall be less than or equal to 1.0×10^{-05} per drop,
  - -- drop of a load onto the canister shall be less than or equal to 1.0×10^{-05} per drop, and
  - -- low-speed impact or collision shall be less than or equal to 1.0×10^{-08} per impact.
- The mean conditional probability of breach of a representative canister resulting from a fire while:
  - -- contained within a waste package resulting from a fire shall be less than or equal to 2.0×10^{-06} per

fire event,

-- contained within a transportation cask [or STC] shall be less than or equal to 1.0×10^{-06} per fire event,

-- located within the CTM shield bell shall be less than or equal to 1.0×10^{-04} per fire event, and

-- contained within an AO shall be less than or equal to 1.0×10^{-04} per fire event.

[Preclosure NSDB (BSC 2008 [DIRS 184200]), Appendix C, Table C-1, Items DS.RF.07 through 12 for Receipt Facility; Appendix D, Table D-1, Items DS.CR.20 through 26 for the CRCFs; Appendix E, Table E-1, Items DS.WH.07 through 12 for the WHF; and Appendix F, Table F-1, items DS.SB.01 through 07. Note that some of the values for probability of breach due to fires in Table F-1 are inconsistent with corresponding values in other tables listed here due to the current revisions of the Preclosure NSDB.]

33.2.2.54 TAD for the South Texas Commercial SNF

The repository facilities and systems, including the cask transfer trolley and the canister transfer machine shall be designed to accommodate the South Texas TAD canister, the South Texas transportation cask, and the South Texas aging overpack without modification according to the following criteria:

- The TAD canister shall contain 12 fuel assemblies.
- The TAD canister shall be 230 inches long by 52 inches in diameter and shall weigh no greater than 100,000 pounds.
- The aging overpack shall be 23'-6" in length, with a weight no greater than 400,000 pounds (including lifting features, personnel barriers, and impact limiters.
- The waste package shall be 248 inches long by 63 inches in diameter and shall weigh no greater than 125,000 pounds.
- The transportation cask shall be 21'-6" long, without impact limiters, and shall weigh no greater than 330,000 pounds.

[*TMRB-2007-025 (BSC 2007 [DIRS 181499]), Activities Not to Preclude Handling of South Texas Commercial Spent Nuclear Fuel in the Surface Facilities. TSRD (DOE 2006 [DIRS 181305]), Section 3.2.1.1.1 includes lifting features, personnel barriers, and impact limiters in the loaded cask weight.]*

33.2.2.55 TAD Canister Availability

At least one TAD canister shall be available at least two years prior to initial repository operations.

[BCP YMP-2006-053 [DIRS 177483], Block 11, Page 12 of 1159.]

33.2.3 Transportation Cask Requirements

33.2.3.1 Transportation Cask Size

The transportation cask cavity shall accommodate a TAD canister formed as a right-circular cylinder with a length including the lifting feature as specified in accordance with Section 33.2.2.1 and a diameter of 66.5 inches; and Attachment C of the *Transportation, Aging, and Disposal Canister System Performance Specification* (DOE 2007 [DIRS 181403]).

[Transportation, Aging, and Disposal Canister System Performance Specification (DOE 2007 [DIRS 181403]), Section 3.2.1(1).]

33.2.3.2 Transportation Cask/TAD Interface

The transportation cask shall function with a TAD canister that meets the requirements of Section 33.2.2

[Transportation, Aging, and Disposal Canister System Performance Specification (DOE 2007 [DIRS 181403]), Section 3.2.1(2).]

33.2.3.3 Transportation Cask Lifting Orientation

The loaded transportation cask (without impact limiters) shall be designed to be lifted in a vertical orientation by an overhead crane.

[Transportation, Aging, and Disposal Canister System Performance Specification (DOE 2007 [DIRS 181403]), Section 3.2.1(3).]

33.2.3.4 Transportation Cask Support

The loaded transportation cask (without impact limiters) shall be able to stand upright when set down upon a flat horizontal surface without requiring the use of auxiliary supports.

[Transportation, Aging, and Disposal Canister System Performance Specification (DOE 2007 [DIRS 181403]), Section 3.2.1(4).]

33.2.3.5 Transportation Cask Loaded Weight

The size and weight of the loaded transportation cask shall be limited to the characteristics provided in Table 33- 7.

Table 33-7 Transportation Cask Characteristics

Characteristic	Value
Maximum cask length without impact limiters (in.)	230
Maximum cask length with impact limiters (in.)	333
Maximum cask diameter without impact limiters (in.)	98
Maximum cask lid diameter (in.)	84
Maximum distance across upper trunnions (in.)	108
Maximum diameter of impact limiters (in.)	126
Maximum weight of fully loaded overpack without impact limiters (lb.)	250,000
Maximum weight of fully loaded overpack, impact limiters and transportation skid (lb.)	360,000

[Transportation, Aging, and Disposal Canister System Performance Specification (DOE 2007 [DIRS 181403]), Section 3.2.1(5).]

33.2.3.6 Transportation Cask Lifting Attachments

Lifting attachments and appurtenances on transportation cask, cask lids and impact limiters shall be designed, documented and fabricated in accordance with NUREG-0612, *Control of Heavy Loads at Nuclear Power Plants*, (NRC 1980 [DIRS 104939]).

[Transportation, Aging, and Disposal Canister System Performance Specification (DOE 2007 [DIRS 181403]), Section 3.2.1(6).]

33.2.3.7 Transportation Cask Structural Compliance

A loaded TAD canister contained within a transportation cask assembled with any other components included in the packaging, as defined in 10 CFR 71 [DIRS 181967], shall meet the requirements for a Type B cask as specified in 10 CFR 71, as evidenced by a valid Certificate of Compliance.

[Transportation, Aging, and Disposal Canister System Performance Specification (DOE 2007 [DIRS 181403]), Section 3.2.2.]

33.2.3.8 Transportation Cask Cladding Temperature Confinement

During normal operations, the CSNF cladding temperature in the TAD canister shall not exceed 752°F. Normal operations include transportation from purchaser sites to the GROA.

[Transportation, Aging, and Disposal Canister System Performance Specification (DOE 2007 [DIRS 181403]), Section 3.2.3(1).]

33.2.3.9 Transportation Cask Cooling Features

Transportation cask cooling features and mechanisms shall be passive.

[Transportation, Aging, and Disposal Canister System Performance Specification (DOE 2007 [DIRS 181403]), Section 3.2.3(2).]

33.2.3.10 Transportation Cask Impact Limiters

The transportation cask impact limiters shall include design and handling features that use standardized tools and features that simplify removal operations.

[Transportation, Aging, and Disposal Canister System Performance Specification (DOE 2007 [DIRS 181403]), Section 3.2.4(1). Standard tools are those that can be found in industrial tool catalogs.]

33.2.3.11 Transportation Cask Shielding

Supplemental shielding shall not be required in vacant trunnion locations to meet dose requirements for transporting the TAD canister with vendor defined contents.

[Transportation, Aging, and Disposal Canister System Performance Specification (DOE 2007 [DIRS 181403]), Section 3.2.4(2). This information is also included in the IICD Volume 2 (DOE 2007 [DIRS 176810]), Section 3.1.1.]

33.2.3.12 Transportation Cask Surface Contamination

Transportation cask shall be designed such that contamination on accessible external surfaces shall be removable to:

a. 1,000 dpm/100 cm^2 - beta-gamma with a wipe efficiency of 0.1.
b. 20 dpm/100 cm^2 - alpha with a wipe efficiency of 0.1.

[Transportation, Aging, and Disposal Canister System Performance Specification (DOE 2007 [DIRS 181403]), Section 3.2.4(3).]

33.2.3.13 Transportation Cask Criticality

Transportation casks shall meet the applicable criticality requirements of 10 CFR 71 [DIRS 181967].

[Transportation, Aging, and Disposal Canister System Performance Specification (DOE 2007 [DIRS 181403]), Section 3.2.5.]

33.2.3.14 Transportation Cask Protection

The loaded transportation cask shall have a tamper indicating device (TID) that meets requirements of 10 CFR 73, *Physical Protection of Plants and Materials* [DIRS 181969].

[Transportation, Aging, and Disposal Canister System Performance Specification (DOE 2007 [DIRS 181403]), Section 3.2.6 and WASRD (DOE 2007 [DIRS 169992]), Sections 4.2.9.A and 4.2.9.B.]

33.2.3.15 Transportation Cask Submergence

Normal operational procedures shall not require submergence of transportation cask into CSNF pool at repository or loading site. Transportation casks may be submerged in pool in unusual or off-normal circumstances.

[Transportation, Aging, and Disposal Canister System Performance Specification (DOE 2007 [DIRS 181403]), Section 3.2.7(1).]

33.2.3.16 Transportation Cask Closures

Transportation cask shall have closures that can be bolted and unbolted using standard tools.

[Transportation, Aging, and Disposal Canister System Performance Specification (DOE 2007 [DIRS 181403]), Section 3.2.7(2). Standard tools are those that can be found in industrial tool catalogs.]

33.2.3.17 Transportation Cask Trunnions

The transportation cask shall have trunnions that meet the following requirements:

a. There shall be two (2) upper (lifting) trunnions with the centerline located between 8 and 24 inches from the top of the vendor defined transportation cask.

b. There shall be two (2) lower (rotation) trunnions with the centerline located less than 36 inches from the bottom of the vendor defined transportation cask.

c. The centerline of each trunnion set shall be outside the area of the spent fuel region to provide maximum ALARA benefits.

[Transportation, Aging, and Disposal Canister System Performance Specification (DOE 2007 [DIRS 181403]), Section 3.2.7(3).]

33.2.3.18 Transportation Cask Upper Trunnions Seats

The transportation cask shall have upper lifting trunnions with dual seats.

a. The smaller seat (lifting yoke interface) shall have a diameter of 6.75 ±0.25 inches and an axial width of no less than 2.5 inches.

b. The diameter of the end caps shall not exceed 8.75 inches.

[Transportation, Aging, and Disposal Canister System Performance Specification (DOE 2007 [DIRS 181403]), Section 3.2.7(4).]

33.2.3.19 Transportation Cask Rotation

Transportation skid shall be designed to permit the loaded transportation cask, without impact limiters, to be upended by rotation about its lower trunnions and removed from the transportation skid in a vertical orientation via overhead crane.

[Transportation, Aging, and Disposal Canister System Performance Specification (DOE 2007 [DIRS 181403]), Section 3.2.7(5).]

33.2.3.20 Transportation Cask Lower Trunnions

The lower turning trunnions shall be pocket trunnions and recessed into the cask body.

[Transportation, Aging, and Disposal Canister System Performance Specification (DOE 2007 [DIRS 181403]), Section 3.2.7(6).]

33.2.3.21 Transportation Cask Upper Trunnions

The transportation cask upper trunnions shall:

a. Be mechanically fastened to the cask body.

b. Incorporate features for installation and removal that maximize ALARA principles. Repository goal is to limit total dose for installing or removing the trunnions to less then 40 millirem per pair.

[Transportation, Aging, and Disposal Canister System Performance Specification (DOE 2007 [DIRS 181403]), Section 3.2.7(7).]

33.2.3.22 Transportation Cask Trunnions Storage

The upper trunnions shall be removed and stowed during transport.

[Transportation, Aging, and Disposal Canister System Performance Specification (DOE 2007 [DIRS 181403]), Section 3.2.7(8).]

33.2.3.23 Transportation Cask Lifting Ring

The transportation cask lid shall have a lifting ring that is:

a. Identical to that of the TAD canister as shown in Attachment C of the *Transportation, Aging, and Disposal Canister System Performance Specification* (DOE 2007 [DIRS 181403]).

b. Is removable from the transportation cask lid.

c. Capable of handling the unencumbered transportation cask lid.

[Transportation, Aging, and Disposal Canister System Performance Specification (DOE 2007 [DIRS 181403]), Section 3.2.7(9).]

33.2.3.24 Transportation Cask Skid Characteristics

The transportation skid to be used with the TAD canister-based system shall have the following characteristics:

a. Secures the transportation cask during normal conditions of transport in accordance with requirements of 10

CFR 71.45 [DIRS 181967].

b. Secures to the railcar in accordance with requirements of AAR Interchange Rule 88, A.15.c.3, *Field Manual of the Interchange Rules* (AAR 2006 [DIRS 181307]).

c. Design shall facilitate lifting of the loaded package in its transportation configuration, including the skid and impact limiters, and transfer of the package from one conveyance to another.

d. The footprint of the transportation skid shall not exceed 124 inches wide by 360 inches long.

e. Vendor skid design shall be compatible with all variations of their TAD canister-based system in a transportation configuration (e.g., PWR and BWR variants).

f. Shall be designed to permit the loaded vendor defined transportation cask, without impact limiters, to be upended by rotation about its lower trunnions and removed in a vertical orientation via overhead crane.

g. Skid shall be designed such that the bottom of loaded vendor defined transportation cask (in a vertical orientation) shall not be required to be lifted more than 12'-3" above grade elevation (top of rail). The conveyance deck height will not be greater than 54" above grade elevation.

[Transportation, Aging, and Disposal Canister System Performance Specification (DOE 2007 [DIRS 181403]), Section 3.2.7(10).]

33.2.3.25 Transportation Cask Materials

Materials selections shall be as necessary to meet requirements of 10 CFR 71[DIRS 181967] and other requirements of the *Transportation, Aging, and Disposal Canister System Performance Specification* (DOE 2007 [DIRS 181403]).

[Transportation, Aging, and Disposal Canister System Performance Specification (DOE 2007 [DIRS 181403]), Section 3.2.8.]

33.2.3.26 Transportation Cask Personnel Protection

The transportation cask shall be designed to provide containment and protect against direct personnel exposure (safety function).

- The geometry of the transportation casks that carry DOE standardized canisters or HLW canisters shall preclude lid contact with canisters following a drop of a cask lid.
- The mean conditional probability of breach of a canister in a sealed transportation cask resulting from a:
  - -- drop shall be less than or equal to 1×10^{-05} per drop,
  - -- drop of a load onto the cask shall be less than or equal to 1×10^{-05} per drop, and
  - -- side impact or collision shall be less than or equal to 1×10^{-08} per impact.
- The mean conditional probability of loss of cask gamma shielding resulting from a drop, impact, or collision to a transportation cask shall be less than or equal to 1×10^{-05} per drop or impact.

[Preclosure NSDB (BSC 2008 [DIRS 184200]), Appendix B, Table B-1, Items H.IH.01 through 05 for casks in the IHF; Appendix C, Table C-1, Items H.RF.01 through 04 for casks in the Receipt Facility; Appendix D, Table D-1, Items H.CR.01 through 05 for casks in the CRCFs; Appendix E, Table E-1, Items H.WH.01 through 04 for casks in the WHF; and Appendix F, Table F-1, Items H.SB.01 through 04 for casks in the Intra-Site Operations Areas.]

33.2.4 Aging Overpack

33.2.4.1 Aging Overpack Size

The aging overpack cavity shall accommodate a TAD canister formed as a right-circular cylinder with a length including the lifting feature as specified in Section 33.2.2.1 and a diameter of 66.5 inches; and Attachment C of the *Transportation, Aging, and Disposal Canister System Performance Specification* (DOE 2007 [DIRS 181403]).

[Transportation, Aging, and Disposal Canister System Performance Specification (DOE 2007 [DIRS 181403]), Section 3.3.1(1).]

33.2.4.2 Aging Overpack Function

The aging overpack shall function with a TAD canister that has a loaded weight consistent with vendor specified dimensions in accordance with Sections 33.2.2.1 and 33.2.2.2.

[Transportation, Aging, and Disposal Canister System Performance Specification (DOE 2007 [DIRS 181403]), Section 3.3.1(2).]

33.2.4.3 Aging Overpack Loaded Weight

The combined size and weight of the loaded TAD canister-based system in an aging overpack shall be limited to ensure handling at the GROA. The limits are provided in Table 33-8.

Table 33-8 Combined Size and Weight Limits

Maximum overpack diameter	144 in.
Maximum overpack lid diameter	84 in.
Maximum overpack lid thickness	18 in.
Maximum overpack length	264 in.
Maximum overpack weight (loaded)	250 tons

[Transportation, Aging, and Disposal Canister System Performance Specification (DOE 2007 [DIRS 181403]), Section 3.3.1(3).]

33.2.4.4 Aging Overpack Operational Requirements

The aging overpack shall meet the operational requirements detailed in sketch presented in *Transportation, Aging, and Disposal Canister System Performance Specification* (DOE 2007 [DIRS 181403]), Attachment D.

[Transportation, Aging, and Disposal Canister System Performance Specification (DOE 2007 [DIRS 181403]), Section 3.3.1(4).]

33.2.4.5 Aging Overpack Transport Orientation

The aging overpack shall be designed to be moved in a vertical orientation.

[Transportation, Aging, and Disposal Canister System Performance Specification (DOE 2007 [DIRS 181403]), Section 3.3.1(5).]

33.2.4.6 Aging Overpack Lid Lifting Ring

The aging overpack lid shall have a lifting ring that is:

a. Identical to that of the TAD canister as shown in *Transportation, Aging, and Disposal Canister System Performance Specification* (DOE 2007 [DIRS 181403]), Attachment C.

b. Capable of handling the unencumbered aging overpack lid.

[Transportation, Aging, and Disposal Canister System Performance Specification (DOE 2007 [DIRS 181403]), Section 3.3.1(6).]

33.2.4.7 Aging Overpack Service Life

The designed maintainable service lifetime of the aging overpack shall be a minimum of 100 years.

[Transportation, Aging, and Disposal Canister System Performance Specification (DOE 2007 [DIRS 181403]), Section 3.3.1(7).]

33.2.4.8 Aging Overpack Seismic Requirements

For each design basis seismic events defined below, the TAD canister in an aging configuration shall meet the following performance specifications. Seismic return vertical and horizontal accelerations are detailed in Attachment A of the *Transportation, Aging, and Disposal Canister System Performance Specification* (DOE 2007 [DIRS 181403]).

a. Following a 2,000-year seismic return period event:

- TAD canister in an aging overpack, shall maintain a maximum leakage rate of 1.5×10^{-12} fraction of canister free volume per second (normal)
- Maintain a maximum cladding temperature of 752°F (normal)
- Canister design codes shall not be exceeded.
- The aging overpack shall remain upright and free standing.

b. Following a 10,000-year seismic return period event:

- TAD canister in an aging overpack, shall maintain a maximum leakage rate of 1.5×10^{-12} fraction of canister free volume per second (normal)
- Maintain a maximum cladding temperature of 1,058°F (off-normal)
- Canister design codes shall not be exceeded.
- The aging overpack shall remain upright and free standing.

c. Following a seismic event characterized by horizontal and vertical peak ground accelerations of 96.52 ft/sec^2 (3g):

- TAD canister in an aging overpack, shall maintain a maximum leakage rate of 1.5×10^{-12} fraction of canister free volume per second (normal)
- Canister design codes may be exceeded (i.e., vendor may rely on capacity in excess of code allowances).
- The aging overpack shall remain upright and free standing during and following the event.

[Transportation, Aging, and Disposal Canister System Performance Specification (DOE 2007 [DIRS 181403]), Section 3.3.2. The leakage rate meets the leak-tight criterion of ANS/ANSI-N14.5, American National Standard for Radioactive Materials - Leakage Tests on Packages for Shipment [DIRS 145735].]

33.2.4.9 Aging Overpack Confinement Following Environmental Exposure

During GROA operations, aging overpack shall be designed to maintain a maximum TAD canister leakage rate of 1.5×10^{-12} fraction of free volume per second (normal) and cladding temperature limits (752°F and 1,058°F for "normal" and "off-normal" limits, respectively) during and following exposure to the environmental conditions listed below.

a. These environmental conditions are not cumulative but occur independently:

- Outdoor average daily temperature range of 2ºF to 116ºF with insolation as specified in 10 CFR 71 [DIRS 181967] (normal)
- An extreme wind gust of 120 mph for 3-sec (normal)
- Maximum tornado wind speed of 189 mph with a corresponding pressure drop of 0.81 lb/in^2 and a rate of pressure drop of 0.30 lb/in^2/sec (off-normal). The spectrum of missiles from the maximum tornado is provided in Table 33-9 (off-normal).

Table 33-9 Spectrum of Missiles

Missile	Mass (lb)	Dimensions (ft)	Hor. Vel. (ft/s)
Wood Plank	114.6	0.301 × 0.948 × 12	190.2
6” Schedule 40 pipe	286.6	0.551D × 15.02	32.8
1 in. steel rod	8.8	0.0833D × 3	26.3
Utility Pole	1,124	1.125D × 35.04	85.3
12” Schedule 40 pipe	749.6	1.05D × 15.02	23.0

b. Annual precipitation of 20 inches/year (normal). The spectrum of rainfall is provided in Table 33-10 (normal)

Table 33-10 Spectrum of Rainfall

Parameter and Frequency	Nominal Estimate	Upper Bound 90% Confidence Interval*
Maximum 24-hr precipitation (50-year return period)	2.79 in./day	3.30 in./day
Maximum 24-hr precipitation (100-year return period)	3.23 in./day	3.84 in./day
Maximum 24-hr precipitation (500-year return period)	4.37 in./day	5.25 in./day
Precipitation 1-hr intensity (50-year return period)	1.35 in./hr	1.72 in./hr
Precipitation 1-hr intensity (100-year return period)	1.68 in./hr	2.15 in./hr

*Use the values for upper bound 90% confidence interval.

c. Maximum daily snowfall of 6.0 inches (normal)
d. Maximum monthly snowfall of 6.6 inches (normal)
e. A lightning strike with a peak current of 250 kiloamps over a period of 260 microseconds and a continuing current of 2 kiloamps for 2 seconds (off-normal).

[Transportation, Aging, and Disposal Canister System Performance Specification (DOE 2007 [DIRS 181403]), Section 3.3.2(2). The leakage rate meets the leak-tight criterion of ANS/ANSI-N14.5 [DIRS 145735], American National Standard for Radioactive Materials - Leakage Tests on Packages for Shipment.]

33.2.4.10 Aging Overpack confinement following Aircraft Impact

Following an impact (with resultant fire) from an F-15 military aircraft into an aging overpack, the TAD canister shall maintain a maximum leak rate of 9.3×10^{-10} fraction of canister free volume per second (off-normal) and maximum cladding temperature 1,058°F (off-normal). The analysis shall assume the following:

a. The crash speed is 500 ft/sec.

b. Impact orientation analyzed shall be that which results in maximum damage.

c. 12,000 lbs of JP-8 fuel.

d. F-15 airframe.

e. Two engine components of 3,740 lbs. and dimensions of 46.5 inches D × 191 inches each spaced 96 inches apart.

f. One (1) M61A1 20-mm cannon mounted internally just off center of axis.

g. 1,000 lbs of inert armaments (i.e., dummy bombs) located between the engines.

[Transportation, Aging, and Disposal Canister System Performance Specification (DOE 2007 [DIRS 181403]), Section 3.3.2(3).]

33.2.4.11 Aging Overpack Confinement Following Volcanic Ash Accumulation

The TAD canister in an aging overpack shall be designed to a maximum leakage rate of 1.5×10^{-12} fraction of canister free volume per second (normal) and maximum cladding temperature of 1,058°F (off-normal) following 4 inches of volcanic ash accumulation. The aging overpack may be on a site transporter. The ash fall loads are estimated at 21 lb/ft^2 with a thermal conductivity of 0.11 BTU/hr-ft-°F.

[Transportation, Aging, and Disposal Canister System Performance Specification (DOE 2007 [DIRS 181403]),

Section 3.3.2(4). The leakage rate meets the leak-tight criterion of ANS/ANSI-N14.5 [DIRS 145735], American National Standard for Radioactive Materials - Leakage Tests on Packages for Shipment.]

33.2.4.12 Aging Overpack Tip-Over

The aging overpack shall retain the TAD canister following a drop and/or tip-over event.

[Transportation, Aging, and Disposal Canister System Performance Specification (DOE 2007 [DIRS 181403]), Section 3.3.2(5).]

33.2.4.13 Aging Overpack Lifting Feature

The aging overpack top shall have one (1) lift feature in each quadrant to allow for lifting using temporary rigging and portable crane. The lifting features shall be of sufficient size to allow any two (2) to upright and lift a loaded aging overpack.

[Transportation, Aging, and Disposal Canister System Performance Specification (DOE 2007 [DIRS 181403]), Section 3.3.2(6).]

33.2.4.14 Aging Overpack Analysis Parameters

For analysis purposes, the aging pad shall be assumed to have the following characteristics:

a. 5,000 PSI concrete with a minimum thickness of three feet and a maximum thickness of seven feet.

b. Concrete surface is a light broom finish.

c. Reinforcing steel shall be #11 on 12 in. centers, each direction, top and bottom, standard cover top and bottom.

d. Soil data is in Attachment E of the *Transportation, Aging, and Disposal Canister System Performance Specification* (DOE 2007 [DIRS 181403]).

[Transportation, Aging, and Disposal Canister System Performance Specification (DOE 2007 [DIRS 181403]), Section 3.3.2(7).]

33.2.4.15 Aging Overpack Cooling Mechanism

Aging Overpack cooling features and mechanisms shall be passive.

[Transportation, Aging, and Disposal Canister System Performance Specification (DOE 2007 [DIRS 181403]), Section 3.3.3(1).]

33.2.4.16 Aging Overpack Confinement Following Engulfing Fire

A loaded aging overpack shall be capable of withstanding a fully engulfing fire without the TAD canister exceeding a leakage rate of 9.3×10^{-10} fraction of canister free volume per second (off-normal) and maximum fuel cladding temperature of 1,058°F (off-normal) under the conditions below.

a. The resulting fire described in Section 33.2.4.10 (aircraft impact).

b. The fire described in 10 CFR 71.73.c(4) [DIRS 181967], *Hypothetical Accident Condition* requirements as modified below.

1. The 30-minute period shall be replaced by a period to be determined by calculation of a pool spill fire formed by 100 gallons of diesel fuel.

2. Additionally, a surrogate fully engulfing fire of duration twice the duration of the pool fire which starts simultaneously with the pool fire and with a steady-state heat release rate of 10 MW shall be used to model the burning rate of all other solid and liquid combustible materials. For this purpose, assume the heat transfer conditions specified in 10 CFR 71.73.c (4) [DIRS 181967]. Temperature conditions from this fire shall be consistent with a totally engulfing black body emitting from the 10 MW requirement.

c. A loaded aging overpack shall withstand a deflagration blast wave, fuel tank projectiles and incident thermal

radiation resulting from the worst case engulfing fire determined in the previous fire protection requirement without the TAD canister exceeding a leakage rate of 9.3×10-10 fraction of canister free volume per second (off-normal) and maximum fuel cladding temperature of 1,058°F (off-normal).

Note:
For this analysis, assume the total quantity of fuel shall vaporize into an efficient fuel-air mixture producing an explosive event. Effects of heat generation, fuel tank projectiles and blast wave propagation shall be considered.

[Transportation, Aging, and Disposal Canister System Performance Specification (DOE 2007 [DIRS 181403]), Section 3.3.3(2).]

33.2.4.17 Aging Overpack Contact Dose Rate

When the loaded aging overpack is on the aging pad with its vertical axis in its normal orientation, the combined neutron and gamma contact dose rate on any accessible exterior surface (excluding the underside of the aging overpack) shall not exceed 40 mrem per hour at any location. This is inclusive of air circulation ducts, penetrations and other potential streaming paths on the overpack surface.

[Transportation, Aging, and Disposal Canister System Performance Specification (DOE 2007 [DIRS 181403]), Section 3.3.4.]

33.2.4.18 Aging Overpack Criticality

There are no criticality requirements for the aging overpack beyond the criticality requirements in Criterion 33.2.2.35.

[Transportation, Aging, and Disposal Canister System Performance Specification (DOE 2007 [DIRS 181403]), Section 3.3.5. This criterion also partially satisfies PO&PR (BSC 2008 [DIRS 185008]), Section 2.6.2.]

33.2.4.19 Aging Overpack Containment After Vertical Drop

The aging overpack shall be designed such that following a 3-ft vertical drop or tip over from a 3-ft high site transporter, the TAD canister maximum leak rate is 9.3×10^{-10} fraction of canister free volume per second (off-normal) under applicable repository environmental conditions. The impacted surface characteristics are as follows:

(1) 5,000 PSI concrete with a minimum thickness of three feet and a maximum thickness of seven feet with a broom finish.

(2) Reinforcing steel shall be #11 on 12 in. centers, each direction, top and bottom, standard cover top and bottom.

(3) Soil data is in Attachment E of the *Transportation, Aging, and Disposal Canister System Performance Specification* (DOE 2007 [DIRS 181403]).

[Transportation, Aging, and Disposal Canister System Performance Specification (DOE 2007 [DIRS 181403]), Section 3.3.6.]

33.2.4.20 Aging Overpack Normal Orientation

The aging overpack shall be designed to receive, age, and discharge a loaded TAD canister in a vertical orientation.

[Transportation, Aging, and Disposal Canister System Performance Specification (DOE 2007 [DIRS 181403]), Section 3.3.7(1).]

33.2.4.21 Aging Overpack Transport Orientation

The loaded aging overpack shall be transportable on site in a vertical orientation.

[Transportation, Aging, and Disposal Canister System Performance Specification (DOE 2007 [DIRS 181403]), Section 3.3.7(2).]

33.2.4.22 Aging Overpack Orientation on Flat Surface

The loaded aging overpack shall be designed to remain in its transport orientation when set down on a flat horizontal surface without use of auxiliary supports.

[Transportation, Aging, and Disposal Canister System Performance Specification (DOE 2007 [DIRS 181403]), Section 3.3.7(3).]

33.2.4.23 Aging Overpack Handling

The aging overpack shall have a vendor designed fixture(s) such that the loaded aging overpack can be handled via an overhead crane.

[Transportation, Aging, and Disposal Canister System Performance Specification (DOE 2007 [DIRS 181403]), Section 3.3.7(4).]

33.2.4.24 Aging Overpack Transportation

The loaded aging overpack shall be designed to be moved to the aging pad via site transporter using a pair of lift beams (e.g., forklift). A sketch showing the interface is shown in Attachment D of the *Transportation, Aging, and Disposal Canister System Performance Specification* (DOE 2007 [DIRS 181403]).

[Transportation, Aging, and Disposal Canister System Performance Specification (DOE 2007 [DIRS 181403]), Section 3.3.7(5).]

33.2.4.25 Aging Overpack Air Pallet Transport

The aging overpack shall be capable of being transported by air pallet.

[Transportation, Aging, and Disposal Canister System Performance Specification (DOE 2007 [DIRS 181403]), Section 3.3.7(6).]

33.2.5 TAD Cask Ancillary Equipment

If used, the TAD cask ancillary equipment shall work in conjunction with the TAD canister to meet objectives of *Transportation, Aging, and Disposal Canister System Performance Specification* (DOE 2007 [DIRS 181403]).

[CRD (DOE 2007 [DIRS 182960]), Section 3.2.1L specifically provides direction to comply with the TAD specification. Derived requirement which will assure that the ancillary equipment is compatible with the TAD canister, transportation cask and the aging overpack]

33.2.6 TAD Shielded Transfer Cask

The STC components shall work in conjunction with the TAD canister to meet objectives of *Transportation, Aging, and Disposal Canister System Performance Specification* (DOE 2007 [DIRS 181403]).

[CRD (DOE 2007 [DIRS 182960]), Section 3.2.1L specifically provides direction to comply with the TAD specification. Derived requirement which will assure that the shielded transfer cask is compatible with the TAD canister, transportation cask and the aging overpack]

33.2.7 Site Transporter

The Site Transporter shall work in conjunction with the TAD canister to meet objectives of *Transportation, Aging, and Disposal Canister System Performance Specification* (DOE 2007 [DIRS 181403]).

[CRD (DOE 2007 [DIRS 182960]), Section 3.2.1L specifically provides direction to comply with the TAD specification. Derived requirement which will assure that the site transporter is compatible with the TAD canister, transportation cask and the aging overpack]

33.3 Conformance Verification

Table 33-11 TAD System Conformance Verification

Criterion		Preliminary Verification Method					
Number	Description	N/A	Analysis	Exam	Demo	Review	Test
33.2.1.1	TAD System Components					X	
33.2.2.1	TAD Dimensional Envelope					X	
33.2.2.2	TAD Loaded Weight					X	
33.2.2.3	TAD Capacity					X	
33.2.2.4	TAD Opening Methodology					X	
33.2.2.5	Bounding PWR Characteristics					X	
33.2.2.6	Bounding BWR Characteristics					X	
33.2.2.7	TAD Loading					X	
33.2.2.8	TAD External Edges					X	
33.2.2.9	TAD Projections and Protuberances					X	
33.2.2.10	TAD Storage Orientation					X	
33.2.2.11	TAD Transportation Orientation					X	
33.2.2.12	TAD Disposal in Waste Package					X	
33.2.2.13	TAD Handling Configuration					X	
33.2.2.14	TAD Aging Configuration					X	
33.2.2.15	TAD Service Life					X	
33.2.2.16	TAD Environmental Conditions				X		
33.2.2.17	TWPS Material				X		
33.2.2.18	TWPS Geometry					X	
33.2.2.19	TWPS Mass Density				X		
33.2.2.20	TWPS Temporary Rigging					X	
33.2.2.21	TAD Confinement Following 2,000-Year Seismic Event					X	
33.2.2.22	TAD Confinement Following 10,000-Year Seismic Event					X	
33.2.2.23	TAD Confinement Following Peak Acceleration					X	
33.2.2.24	TAD Confinement Following Environmental Exposure					X	
33.2.2.25	TAD in Transportation Cask					X	
33.2.2.26	TAD Bottom					X	
33.2.2.27	TAD Normal Cladding Temperature				X		
33.2.2.28	TAD Off-Normal Cladding Temperature				X		
33.2.2.29	TAD Leakage Rate After Engulfing Fire					X	
33.2.2.30	TAD Cooling Features					X	
33.2.2.31	TAD Cladding Temperature in Waste Package				X		
33.2.2.32	TAD Surface Average Dose Rate					X	
33.2.2.33	TAD Surface Maximum Dose Rate					X	
33.2.2.34	TAD External Surface Contamination					X	
33.2.2.35	Criticality					X	
33.2.2.36	TAD Confinement Design					X	
33.2.2.37	TAD Fill Gas					X	

Table 33-11 TAD System Conformance Verification (Continued)

Criterion		Preliminary Verification Method					
Number	Description	N/A	Analysis	Exam	Demo	Review	Test
33.2.2.38	TAD Design Codes					X	
33.2.2.39	TAD Drying					X	
33.2.2.40	TAD Final Closure Design					X	
33.2.2.41	TAD Underwater Handling					X	
33.2.2.42	TAD Lifting Feature					X	
33.2.2.43	Open TAD Lifting Feature					X	
33.2.2.44	TAD Draining, Drying, and Backfill					X	
33.2.2.45	TAD Required Materials					X	
33.2.2.46	TAD Compatibility with Pool					X	
33.2.2.47	TAD Organic Components					X	
33.2.2.48	TAD Surface Cleanliness					X	
33.2.2.49	TAD Pyrophoric Materials					X	
33.2.2.50	TAD Hazardous Materials					X	
33.2.2.51	TAD Markings					X	
33.2.2.52	Probability of Criticality					X	
33.2.2.53	TAD Canister					X	
33.2.2.54	TAD for South Texas Commercial SNF					X	
33.2.2.55	TAD Canister Availability	X					
33.2.3.1	Transportation Cask Size					X	
33.2.3.2	Transportation Cask/TAD Interface					X	
33.2.3.3	Transportation Cask Lifting Orientation					X	
33.2.3.4	Transportation Cask Support					X	
33.2.3.5	Transportation Cask Loaded Weight					X	
33.2.3.6	Transportation Pack Lifting Attachments					X	
33.2.3.7	Transportation Cask Structural Compliance					X	
33.2.3.8	Transportation Cask Cladding Temperature Confinement					X	
33.2.3.9	Transportation Cask Cooling Features					X	
33.2.3.10	Transportation Cask Impact Limiters					X	
33.2.3.11	Transportation Cask Shielding					X	
33.2.3.12	Transportation Cask Surface Contamination					X	
33.2.3.13	Transportation Cask Criticality					X	
33.2.3.14	Transportation Cask Protection					X	
33.2.3.15	Transportation Cask Submergence					X	
33.2.3.16	Transportation Cask Closures					X	
33.2.3.17	Transportation Cask Trunnions					X	
33.2.3.18	Transportation Cask Upper Trunnions Seats					X	
33.2.3.19	Transportation Cask Rotation					X	
33.2.3.20	Transportation Cask Lower Trunnions					X	

Table 33-11 TAD System Conformance Verification (Continued)

Criterion		Preliminary Verification Method					
Number	Description	N/A	Analysis	Exam	Demo	Review	Test
33.2.3.21	Transportation Cask Upper Trunnions					X	
33.2.3.22	Transportation Cask Trunnions Storage					X	
33.2.3.23	Transportation Cask Lifting Ring					X	
33.2.3.24	Transportation Cask Skid Characteristics					X	
33.2.3.25	Transportation Cask Materials					**X**	
33.2.3.26	Transportation Cask Personnel Protection					**X**	
33.2.4.1	Aging Overpack Size					X	
33.2.4.2	Aging Overpack Function					X	
33.2.4.3	Aging Overpack Loaded Weight					X	
33.2.4.4	Aging Overpack Operational Requirements					X	
33.2.4.5	Aging Overpack Transport Orientation					X	
33.2.4.6	Aging Overpack Lid Lifting Ring					X	
33.2.4.7	Aging Overpack Service Life					X	
33.2.4.8	Aging Overpack Seismic Requirements					X	
33.2.4.9	Aging Overpack Confinement Following Environmental Exposure					X	
33.2.4.10	Aging Overpack Confinement following Aircraft Impact					X	
33.2.4.11	Aging Overpack Confinement Following Volcanic Ash Accumulation					X	
33.2.4.12	Aging Overpack Tip-Over					X	
33.2.4.13	Aging Overpack Lifting Feature					X	
33.2.4.14	Aging Overpack Analysis Parameters					X	
33.2.4.15	Aging Overpack Cooling Mechanism					X	
33.2.4.16	Aging Overpack Confinement Following Engulfing Fire					X	
33.2.4.17	Aging Overpack Contact Dose Rate					X	
33.2.4.18	Aging Overpack Criticality					X	
33.2.4.19	Aging Overpack Containment After Vertical Drop					X	
33.2.4.20	Aging Overpack Normal Orientation					X	
33.2.4.21	Aging Overpack Transport Orientation					X	
33.2.4.22	Aging Overpack orientation on Flat Surface					X	
33.2.4.23	Aging Overpack Handling					X	
33.2.4.24	Aging Overpack Transportation					X	
33.2.4.25	Aging Overpack Air Pallet Transport					X	
33.2.5	TAD Cask Ancillary Equipment					X	
33.2.6	TAD Shielded Transfer Cask					X	
33.2.7	Site Transporter					X	

34 References

34.1 Documents Cited

The following documents are referenced by the DIRS number:

[DIRS 101648]
CRWMS M&O 1998. *Interface Control Document for the Transportation System and the Mined Geological Disposal System Surface Repository Facilities and Systems for Mechanical and Envelope Interfaces Between the Surface Facility Operations and the Waste Acceptance and Transportation Office.* A00000000-01717-8100-00008 REV 00. Las Vegas, Nevada: CRWMS M&O. ACC: MOL.19980904.0591.
[DIRS 102575]
CRWMS M&O 1995. *Qualification of Spent Nuclear Fuel Assembly Characteristics for Use as a Design Basis*. B00000000-01717-0200-00002 REV 04. Las Vegas, Nevada: CRWMS M&O. ACC: MOV.19960731.0003.
[DIRS 102588]
DOE (U.S. Department of Energy) 1992. *Characteristics of Potential Repository Wastes*. DOE/RW-0184-R1. Four volumes. Washington, D.C.: U.S. Department of Energy, Office of Civilian Radioactive Waste Management. ACC: HQO.19920827.0001; HQO.19920827.0002; HQO.19920827.0003; HQO.19920827.0004.
[DIRS 123570]
CRWMS M&O 1998. *Characteristics of Commercial SNF Assemblies to be Disposed of at the MGDS*. BBAA00000-01717-0200-00061 REV 01. Las Vegas, Nevada: CRWMS M&O. ACC: MOL.19980417.0685.
[DIRS 125707]
Dorf, R.C., ed. 1993. *The Electrical Engineering Handbook*. Boca Raton, Florida: CRC Press. TIC: 209253.
[DIRS 150730]
Bowman, F.L. and Itkin, I. 2000. *Memorandum of Agreement for Acceptance of Naval Spent Nuclear Fuel.* Memorandum of Agreement between the Director, Naval Nuclear Propulsion Program (NNPP), Department of the Navy, Arlington, VA and the Director, Office of Civilian Radioactive Waste Management (RW), U.S. Department of Energy (DOE), Washington, DC, Revision 1, April 11, 2000. ACC: HQP.20000628.0006.
[DIRS 154386]
YMP (Yucca Mountain Site Characterization Project) 2001. *Reclamation Implementation Plan.* YMP/91-14, Rev. 2. Las Vegas, Nevada: Yucca Mountain Site Characterization Office. ACC: MOL.20010301.0238.
[DIRS 155970]
DOE (U.S. Department of Energy) 2002. *Final Environmental Impact Statement for a Geologic Repository for the Disposal of Spent Nuclear Fuel and High-Level Radioactive Waste at Yucca Mountain, Nye County, Nevada*. DOE/EIS-0250. Washington, D.C.: U.S. Department of Energy, Office of Civilian Radioactive Waste Management. ACC: MOL.20020524.0314; MOL.20020524.0315; MOL.20020524.0316; MOL.20020524.0317; MOL.20020524.0318; MOL.20020524.0319; MOL.20020524.0320.
[DIRS 165505]
YMP (Yucca Mountain Site Characterization Project) 2003. *Disposal Criticality Analysis Methodology Topical Report.* YMP/TR-004Q, Rev. 02. Las Vegas, Nevada: Yucca Mountain Site Characterization Office. ACC: DOC.20031110.0005.
[DIRS 166275]
Canori, G.F. and Leitner, M.M. 2003. *Project Requirements Document.* TER-MGR-MD-000001 REV 02. Las Vegas, Nevada: Bechtel SAIC Company. ACC: DOC.20031222.0006.
[DIRS 167313]
BSC (Bechtel SAIC Company) 2004. *Preliminary Hazards Analysis for License Application Study*. 000-30R-HPYK-00100-000-00A. Las Vegas, Nevada: Bechtel SAIC Company. ACC: ENG.20040610.0002.
[DIRS 167367]
DOE (U.S. Department of Energy) 2003. *Repository Design Asset Functional & Operational Requirements and Design Solutions*. DOE/RW-0600, Rev. 1. Las Vegas, Nevada: U.S. Department of Energy, Office of Civilian Radioactive Waste Management. ACC: DOC.20040202.0005.
[DIRS 167988]
Transnuclear. 2001. *TN-68 Transport Packaging Safety Analysis Report.* NRC Docket 71-9293. Hawthorne, New York: Transnuclear. ACC: MOL.20040517.0697.
[DIRS 168553]
BSC (Bechtel SAIC Company) 2004. *Criticality Model.* CAL-DS0-NU-000003 REV 00A. Las Vegas, Nevada: Bechtel SAIC Company. ACC: DOC.20040913.0008 .
[DIRS 168721]
BSC (Bechtel SAIC Company) 2004. *Addition of a Fuel Handling Facility and Central Control Center*. Baseline

Change Proposal YMP-2004-072. Las Vegas, Nevada: Bechtel SAIC Company. ACC: MOV.20040713.0016.
[DIRS 169992]
DOE (U.S. Department of Energy) 2007. *Waste Acceptance System Requirements Document.* DOE/RW-0351, Rev. 5. Washington, D.C.: U.S. Department of Energy, Office of Civilian Radioactive Waste Management. ACC: DOC.20070522.0007.
[DIRS 170737]
Dixon, W.R. 1997. Application for Permit to Appropriate the Public Waters of the State of Nevada. Serial No. 63263. [Carson City], Nevada: State of Nevada. ACC: MOL.19971124.0428.
[DIRS 170738]
Dixon, W.R. 1997. Application for Permit to Appropriate the Public Waters of the State of Nevada. Serial No. 63264. [Carson City], Nevada: State of Nevada. ACC: MOL.19971124.0429.
[DIRS 170739]
Dixon, W.R. 1997. Application for Permit to Appropriate the Public Waters of the State of Nevada. Serial No. 63265. [Carson City], Nevada: State of Nevada. ACC: MOL.19971124.0430.
[DIRS 170740]
Dixon, W.R. 1997. Application for Permit to Appropriate the Public Waters of the State of Nevada. Serial No. 63266. [Carson City], Nevada: State of Nevada. ACC: MOL.19971124.0431.
[DIRS 170741]
Dixon, W.R. 1997. Application for Permit to Appropriate the Public Waters of the State of Nevada. Serial No. 63267. [Carson City], Nevada: State of Nevada. ACC: MOL.19971124.0432.
[DIRS 171407]
BSC (Bechtel SAIC Company) 2004. *D&E/RIT IED - PWR and BWR Source Term*. 000-IED-MGR0-00101-000-00A. Las Vegas, Nevada: Bechtel SAIC Company. ACC: ENG.20040812.0032.
[DIRS 171435]
BSC (Bechtel SAIC Company) 2004. *D&E/RIT IED - PWR and BWR Source Term*. 000-IED-MGR0-00104-000-00A. Las Vegas, Nevada: Bechtel SAIC Company. ACC: ENG.20040813.0003.
[DIRS 171436]
BSC (Bechtel SAIC Company) 2004. *D&E/RIT IED - PWR and BWR Source Term*. 000-IED-MGR0-00106-000-00A. Las Vegas, Nevada: Bechtel SAIC Company. ACC: ENG.20040813.0005.
[DIRS 171502]
BSC (Bechtel SAIC Company) 2004. *D&E/RIT IED - PWR and BWR Source Term*. 000-IED-MGR0-00102-000-00A. Las Vegas, Nevada: Bechtel SAIC Company. ACC: ENG.20040813.0001
[DIRS 171503]
BSC (Bechtel SAIC Company) 2004. *D&E/RIT IED - PWR and BWR Source Term*. 000-IED-MGR0-00103-000-00A. Las Vegas, Nevada: Bechtel SAIC Company. ACC: ENG.20040813.0002.
[DIRS 171933]
Roberson, J.H. and Chu, M.S.Y. "Clarification of Roles and Responsibilities." Memorandum from J.H. Roberson (DOE/EM) and M.S.Y. Chu (DOE/OCRWM) to the Under Secretary, December 19, 2003. ACC: HQO.20040129.0008.
[DIRS 171935]
INFCIRC/546. 1997. *Joint Convention on the Safety of Spent Fuel Management and on the Safety of Radioactive Waste Management.* [Vienna, Austria]: International Atomic Energy Agency. TIC: 256877.
[DIRS 172633]
Holtec International 2003. *Storage, Transport, and Repository Cask Systems, (Hi-Star Cask System) Safety Analysis Report, 10 CFR 71, Docket 71-9261*. HI-951251, Rev. 10. [Marlton, New Jersey]: Holtec International. ACC: MOL.20050119.0271.
[DIRS 174649]
Collins, C.A. 2003. *Instructions for Completing Nuclear Material Transfer Reports (DOE/NRC Forms 741 and 740M).* NUREG/BR-0006, Rev. 6. Washington, D.C.: U.S. Nuclear Regulatory Commission, Office of Nuclear Material Safety and Safeguards. ACC: MOL.20050825.0277.
[DIRS 175743]
Arthur, W.J., III 2005. "Direction to Prepare a Revised Critical Decision-1 (CD-1) for Accepting and Handling Primarily Canisterized Fuel at the Yucca Mountain (YM) Repository; Contract Number DE-AC28-01RW12101." Letter from W.J. Arthur, III (DOE/ORD) to T.C. Feigenbaum (BSC), October 25, 2005, OPM&E:VFI-0030. ACC: MOL.20051116.0319.
[DIRS 176636]
BSC (Bechtel SAIC Company) 2005. *FY2006 Site Safety Upgrades - Relocation of Construction Support Facilities*. Baseline Change Proposal YMP-2006-004. Las Vegas, Nevada: Bechtel SAIC Company. ACC: MOL.20060413.0156.

[DIRS 176668]
Arenaz, M.R. 2006. "Request for Updated U.S. Department of Energy (DOE) Canister Thermal Output Limits in Support of Repository Design (EM-FMDP-06-006)." Memorandum from M.R. Arenaz (DOE) to W.J. Arthur, III (DOE/ORD), February 6, 2006, 0210065322, with enclosures. ACC: MOL.20060315.0141.
[DIRS 176810]
DOE (U.S. Department of Energy) 2007. *Waste Acceptance, Transportation, and Monitored Geologic Repository System Elements*. Volume 2 of *Integrated Interface Control Document*. DOE/RW-0572, Rev. 0. Las Vegas, Nevada: U.S. Department of Energy, Office of Civilian Radioactive Waste Management. ACC: DOC.20070706.0001.
[DIRS 176937]
DOE (U.S. Department of Energy) 2006. *Yucca Mountain Project Conceptual Design Report.* TDR-MGR-MD-000014, Rev. 03. Las Vegas, Nevada: U.S. Department of Energy, Office of Repository Development. ACC: ENG.20060403.0008.
[DIRS 177194]
BSC (Bechtel SAIC Company) 2004. *Technical Management Review Board (TMRB) Decision Proposal.* TMRB-2004-073. Las Vegas, Nevada: Bechtel SAIC Company. ACC: MOL.20041022.0201.
[DIRS 177483]
BSC (Bechtel SAIC Company) 2006. *YMP CD-1 Update PED Baseline Implementation (Scenario 8).* Baseline Change Proposal YMP-2006-053. Las Vegas, Nevada: Bechtel SAIC Company. ACC: MOL.20061019.0326.
[DIRS 177484]
Hamilton-Ray, B.V. 2006. "Contract No. DE-AC28-01RW12101 - Yucca Mountain Project (YMP) Critical Decision 1 (CD-1) Scenario 8 Update". Letter from B.V. Hamilton-Ray (DOE/OCRWM) to T.C. Feigenbaum (BSC), July 28, 2006, 0731069067, OPC:VFI-1305, with enclosure. ACC: CCU.20060731.0003.
[DIRS 177485]
BSC (Bechtel SAIC Company) 2006. *Addition of Initial Handling Capabilities - FY06 Scope.* Baseline Change Proposal YMP-2006-043. Las Vegas, Nevada: Bechtel SAIC Company. ACC: MOL.20061019.0325.
[DIRS 177491]
DOE (U.S. Department of Energy) 2006. *Monitored Geologic Repository Systems Requirements Document.* YMP/CM-0026, Rev. 1, ICN 0. Las Vegas, Nevada: U.S. Department of Energy, Office of Civilian Radioactive Waste Management. ACC: DOC.20060921.0002.
[DIRS 177531]
BSC (Bechtel SAIC Company) 2005. *IED Waste Package Weld Characteristics [Sheet 1 of 1]*. 800-IED-WIS0-01001-000-00A. Las Vegas, Nevada: Bechtel SAIC Company. ACC: ENG.20050406.0009.
[DIRS 177878]
BSC (Bechtel SAIC Company) 2006. *CD-1 Scenarios 8 Update for Single License Application.* Baseline Change Proposal YMP-2006-060. Las Vegas, Nevada: Bechtel SAIC Company. ACC: MOL.20061019.0327.
[DIRS 178050]
BSC (Bechtel SAIC Company) 2004. *D&E/RIT IED PWR and BWR Source Term [Sheet 5].* 000-IED-MGR0-00105-000-00A. Las Vegas, Nevada: Bechtel SAIC Company. ACC: ENG.20040813.0004.
[DIRS 178236]
SNL (Sandia National Laboratories) 2007. *Criticality Input to Canister Based System Performance Specification for Disposal.* TDR-DS0-NU-000002 REV 01. Las Vegas, Nevada: Sandia National Laboratories. ACC: DOC.20070103.0002.
[DIRS 178596]
Hamilton-Ray, B.V. 2006. "Contracting Officer Authorization to Bechtel SAIC Company, LLC (BSC); Transport, Aging and Disposal Canister (TAD) Based System - Assignment of Design Responsibilities, Contract Number DE-AC28-01RW12101; Ltr No. 07-005." Letter from B.V. Hamilton-Ray (DOE/OCRWM) to T.C. Feigenbaum (BSC), November 22, 2006, 1127069931. ACC: CCU.20061127.0001.
[DIRS 178597]
Hamilton-Ray, B.V. 2006. "Amendment to Contracting Officer Authorization to Bechtel SAIC Company, LLC (BSC); Transport, Aging and Disposal Canister Based System - Assignment of Design Responsibilities, Co Ltr No. 07-005; Contract Number DE-AC28-01RW12101." Letter from B.V. Hamilton-Ray (DOE/CRWMS) to T.C. Feigenbaum (BSC), December 14, 2006, 1218060056, OCE:KDL-0297. ACC: CCU.20061218.0001.
[DIRS 178792]
DOE (U.S. Department of Energy) 2007. "High-Level Radioactive Waste and U.S. Department of Energy and Naval Spent Nuclear Fuel to the Civilian Radioactive Waste Management System." Volume 1 of *Integrated Interface Control Document.* DOE/RW-0511, Rev. 3. Washington, D.C.: U.S. Department of Energy, Office of Civilian Radioactive Waste Management. ACC: DOC.20070125.0002.
[DIRS 178867]

BSC (Bechtel SAIC Company) 2007. *Baseline/Funding Change Proposal, Fiscal Year 2007 YMP AWP Revision.* Baseline Change Proposal YMP-2007-001, Rev. 1. Las Vegas, Nevada: Bechtel SAIC Company. ACC: MOL.20070308.0112.
[DIRS 179641]
BSC (Bechtel SAIC Company) 2007. *Project Design Criteria Document.* 000-3DR-MGR0-00100-000-007. Las Vegas, Nevada: Bechtel SAIC Company. ACC: ENG.20071016.0005; ENG.20071108.0001; ENG.20071220.0003; ENG.20080107.0001; ENG.20080107.0002; ENG.20080107.0016; ENG.20080107.0017; ENG.20080131.0006.
[DIRS 179794]
BSC (Bechtel SAIC Company) 2006. *TMRB Decision Proposal. Subsurface Layout Tolerances.* TMRB-2006-025. Las Vegas, Nevada: Bechtel SAIC Company. ACC: LLR.20070326.0003.
[DIRS 180056]
BSC (Bechtel SAIC Company) 2007. *Emergency Diesel Generator Facility Fire Hazard Analysis.* 26D-M0A-FP00-00100-000-00A. Las Vegas, Nevada: Bechtel SAIC Company. ACC: ENG.20070329.0010.
[DIRS 180068]
BSC (Bechtel SAIC Company) 2007. *Receipt Facility Fire Hazard Analysis.* 200-M0A-FP00-00100-000-00A. Las Vegas, Nevada: Bechtel SAIC Company. ACC: ENG.20070823.0001.
[DIRS 180069]
BSC (Bechtel SAIC Company) 2007. *Central Control Center Facility Fire Hazard Analysis.* 240-M0A-FP00-00100-000-00A. Las Vegas, Nevada: Bechtel SAIC Company. ACC: ENG.20070612.0002.
[DIRS 180109]
BSC (Bechtel SAIC Company) 2008. *Q-List.* 000-30R-MGR0-00500-000-004. Las Vegas, Nevada: Bechtel SAIC Company.
[DIRS 180306]
BSC (Bechtel SAIC Company) 2007. *Subsurface Repository Fire Hazard Analysis.* 800-M0A-FP00-00100-000-00A. Las Vegas, Nevada: Bechtel SAIC Company. ACC: ENG.20070928.0001; ENG.20071101.0014.
[DIRS 180412]
BSC (Bechtel SAIC Company) 2007. *IED Emplacement Drift Configuration and Environment.* 800-IED-MGR0-00501-000 REV 00B. Las Vegas, Nevada: Bechtel SAIC Company. ACC: ENG.20070716.0006.
[DIRS 180444]
BSC (Bechtel SAIC Company) 2007. *IED Interlocking Drip Shield.* 800-IED-SSE0-00101-000 REV 00C. Las Vegas, Nevada: Bechtel SAIC Company. ACC: ENG.20070913.0011.
[DIRS 180445]
BSC (Bechtel SAIC Company) 2007. *IED Emplacement Pallet.* 800-IED-SSE0-00201-000 REV 00B. Las Vegas, Nevada: Bechtel SAIC Company. ACC: ENG.20070608.0007.
[DIRS 180449]
BSC (Bechtel SAIC Company) 2007. *IED Waste Package Decay Heat Generation Design Basis and Thermal Information.* 800-IED-WIS0-00801-000-00B. Las Vegas, Nevada: Bechtel SAIC Company. ACC: ENG.20070913.0013.
[DIRS 180940]
BSC (Bechtel SAIC Company) 2007. *IED Subsurface Facilities Ground Support Committed Materials.* 800-IED-WIS0-01501-000 REV 00C. Las Vegas, Nevada: Bechtel SAIC Company. ACC: ENG.20071022.0026.
[DIRS 181033]
Hamilton-Ray, B.V. 2007. "Contracting Officer Authorization to Bechtel SAIC Company, LLC (BSC), Directing BSC to Consider Interface Requirements and Include Utility Feed Connections from the Monitored Geological Repository to the Transportation Facilities, Contract No. DE-AC28-01RW12101, LTR. No. 07-020." Letter from B.V. Hamilton-Ray (DOE/OCRWM) to T.C. Feigenbaum (BSC), May 9, 2007, 0509070891, OCE:SB-0992. ACC: CCU.20070509.0005.
[DIRS 181305]
DOE (U.S. Department of Energy) 2006. *Transportation System Requirements Document.* DOE/RW-0425, Rev. 4. Washington, D.C.: U.S. Department of Energy, Office of Civilian Radioactive Waste Management. ACC: DOC.20070102.0011.
[DIRS 181403]
DOE (U.S. Department of Energy) 2007. *Transportation, Aging and Disposal Canister System Performance Specification.* WMO-TADCS-000001, Rev. 0. Washington, D.C.: U.S. Department of Energy, Office of Civilian Radioactive Waste Management. ACC: DOC.20070614.0007.
[DIRS 181499]
BSC (Bechtel SAIC Company) 2007. *TMRB Decision Proposal, Activities Not to Preclude Handling of South Texas Commercial Spent Nuclear Fuel in the Surface Facilities.* TMRB-2007-025. Las Vegas, Nevada: Bechtel

SAIC Company. ACC: MOL.20070720.0045.
[DIRS 181530]
BSC (Bechtel SAIC Company) 2007. *Transportation Cask Gas Sampling Requirements Analysis.* 000-30R-MGR0-02500-000 REV 000. Las Vegas, Nevada: Bechtel SAIC Company. ACC: ENG.20071220.0002.
[DIRS 181547]
BSC (Bechtel SAIC Company) 2007. *Nuclear Facilities Receipt Rate Requirements Analysis Engineering Study.* 000-30R-MGR0-02600-000. Las Vegas, Nevada: Bechtel SAIC Company. ACC: ENG.20071227.0017.
[DIRS 181574]
BSC (Bechtel SAIC Company) 2007. *TMRB Decision Proposal, Wet Handling Facility Pool Boration.* TMRB-2007-021. Las Vegas, Nevada: Bechtel SAIC Company. ACC: MOL.20070822.0150.
[DIRS 181993]
BSC (Bechtel SAIC Company) 2007. *Site Fire Hazard Analysis.* 000-M0A-FP00-00200-000-00A. Las Vegas, Nevada: Bechtel SAIC Company. ACC: ENG.20070814.0003.
[DIRS 182004]
BSC (Bechtel SAIC Company) 2007. *TMRB Decision Proposal, Initial Handling Facility Seismic Design Bases.* TMRB-2007-011. Las Vegas, Nevada: Bechtel SAIC Company. ACC: MOL.20070720.0046.
[DIRS 182037]
BSC (Bechtel SAIC Company) 2006. *TMRB Decision Proposal, Correction to IEDs 800-IED-SSE0-00101-000-00A and 800-IED-SSE0-00201-000-00A.* TMRB-2006-020. Las Vegas, Nevada: Bechtel SAIC Company. ACC: RPM.20070723.0081.
[DIRS 182038]
BSC (Bechtel SAIC Company) 2005. *Technical Management Review Board (TMRB) Decision Proposal.* TMRB-2005-016, Revision 1. [Las Vegas, Nevada: Bechtel SAIC Company]. ACC: MOL.20050714.0428.
[DIRS 182041]
BSC (Bechtel SAIC Company) 2004. *Technical Management Review Board (TMRB) Decision Proposal.* TMRB-2004-045 Revision 1. [Las Vegas, Nevada: Bechtel SAIC Company]. ACC: MOL.20041025.0211.
[DIRS 182049]
BSC (Bechtel SAIC Company) 2004. *TMRB Decision Proposal, Revise multi-sheet IEDs.* TMRB-2004-086. Las Vegas, Nevada: Bechtel SAIC Company. ACC: MOL.20041026.0228.
[DIRS 182184]
BSC (Bechtel SAIC Company) 2007. *TMRB Decision Proposal, Preaction Double Interlock Fire Suppression.* TMRB-2007-038. Las Vegas, Nevada: Bechtel SAIC Company. ACC: RPM.20070816.0027.
[DIRS 182185]
BSC (Bechtel SAIC Company) 2007. *TMRB Decision Proposal, WNNRF (Building 230) Scope Alignment.* TMRB-2007-039. Las Vegas, Nevada: Bechtel SAIC Company. ACC: MOL.20070822.0152.
[DIRS 182272]
BSC (Bechtel SAIC Company) 2007. *TMRB Decision Proposal - Seismic Design Methodology for the Subsurface Invert*. TMRB-2007-034. Las Vegas, Nevada: Bechtel SAIC Company. ACC: RPM.20080114.0039.
[DIRS 182328]
BSC (Bechtel SAIC Company) 2007. *TMRB Decision Proposal, Remove the Requirement for Backfill in the Subsurface Exhaust and Access Mains.* TMRB-2007-043. Las Vegas, Nevada: Bechtel SAIC Company. ACC: RPM.20071009.0046.
[DIRS 182336]
BSC (Bechtel SAIC Company) 2007. *TMRB Decision Proposal, Update SS Committed Materials IED.* TMRB-2007-029. Las Vegas, Nevada: Bechtel SAIC Company. ACC: RPM.20071113.0108.
[DIRS 182479]
BSC (Bechtel SAIC Company) 2007. *TMRB Decision Proposal, Use of Vertical Shielded Transfer Cask (STC).* TMRB-2007-042. Las Vegas, Nevada: Bechtel SAIC Company. ACC: RPM.20070816.0026.
[DIRS 182746]
BSC (Bechtel SAIC Company) 2007. *IED Emplacement Drift Invert.* 800-IED-MGR0-00601-000 REV 00B. Las Vegas, Nevada: Bechtel SAIC Company. ACC: ENG.20071120.0004.
[DIRS 182784]
BSC (Bechtel SAIC Company) 2007. *Regulatory Guidance Agreement, Agreement for Regulatory Guide 3.71, Revision 1 - Nuclear Criticality Safety Standards for Fuels and Materials Facilities.* REG-CRW-RG-000240 REV 01. Las Vegas, Nevada: Bechtel SAIC Company. ACC: DOC.20070828.0005.
[DIRS 182926]
BSC (Bechtel SAIC Company) 2007. *IED Subsurface Facilities Geological Data.* 800-IED-WIS0-01801-000-00C. Las Vegas, Nevada: Bechtel SAIC Company. ACC: ENG.20070913.0012.
[DIRS 182927]

BSC (Bechtel SAIC Company) 2007. *IED Subsurface Facilities Ground Support Configuration.* 800-IED-WIS0-01601-000 REV 00B. Las Vegas, Nevada: Bechtel SAIC Company. ACC: ENG.20071129.0027.
[DIRS 182928]
BSC (Bechtel SAIC Company) 2007. *IED Waste Package Configuration.* 800-IED-WIS0-02101-000 REV 00B. Las Vegas, Nevada: Bechtel SAIC Company. ACC: ENG.20070926.0014.
[DIRS 182960]
DOE (U.S. Department of Energy) 2007. *Civilian Radioactive Waste Management System Requirements Document (CRD).* DOE/RW-0406, Rev. 08. Washington, D.C.: U.S. Department of Energy, Office of Civilian Radioactive Waste Management. ACC: DOC.20070906.0005.
[DIRS 183016]
BSC (Bechtel SAIC Company) 2007. *IED Waste Package Decay Heat Generation-TSPA Modeling Basis.* 800-IED-WIS0-00702-000 REV 00A. Las Vegas, Nevada: Bechtel SAIC Company. ACC: ENG.20071005.0024.
[DIRS 183104]
BSC (Bechtel SAIC Company) 2007. *IED Waste Package Radiation Characteristics.* 800-IED-WIS0-01301-000 REV 00C. Las Vegas, Nevada: Bechtel SAIC Company. ACC: ENG.20071120.0005.
[DIRS 183105]
BSC (Bechtel SAIC Company) 2007. *IED Waste Package Characteristics - 1999 Design Basis Waste Stream.* 800-IED-WIS0-01401-000 REV 00B. Las Vegas, Nevada: Bechtel SAIC Company. ACC: ENG.20071005.0025.
[DIRS 183251]
BSC (Bechtel SAIC Company) 2007. *Canister Receipt and Closure Facility 1 Fire Hazard Analysis.* 060-M0A-FP00-00100-000-00B. Las Vegas, Nevada: Bechtel SAIC Company. ACC: ENG.20071129.0032.
[DIRS 183263]
BSC (Bechtel SAIC Company) 2007. *TMRB Decision Proposal, Criticality Accident Alarm System.* TMRB-2007-053. Las Vegas, Nevada: Bechtel SAIC Company. ACC: RPM.20071119.0274.
[DIRS 183353]
BSC (Bechtel SAIC Company) 2007. *Emplacement and Retrieval Transport and Emplacement Vehicle Mechanical Equipment Envelope.* 800-MJ0-HE00-00101-000 REV 00B. Las Vegas, Nevada: Bechtel SAIC Company. ACC: ENG.20070918.0041.
[DIRS 183627]
BSC (Bechtel SAIC Company) 2008. *Postclosure Modeling and Analyses Design Parameters.* TDR-MGR-MD-000037 REV 02. Las Vegas, Nevada: Bechtel SAIC Company. ACC: ENG.20080108.0002.
[DIRS 183653]
BSC (Bechtel SAIC Company) 2007. *GROA/REMY Internal Constraints*. TDR-MGR-MD-000059 Rev 000. Las Vegas, Nevada: Bechtel SAIC Company. ACC: ENG.20071029.0009.
[DIRS 183743]
BSC (Bechtel SAIC Company) 2007. *IED Subsurface Facilities Layout Geographical Data.* 800-IED-WIS0-01701-000 REV 00C. Las Vegas, Nevada: Bechtel SAIC Company. ACC: ENG.20071211.0007.
[DIRS 183932]
BSC (Bechtel SAIC Company) 2008. *IED Geotechnical and Thermal Parameters.* 800-IED-MGR0-00401-000 REV 00H. Las Vegas, Nevada: Bechtel SAIC Company. ACC: ENG.20080128.0007.
[DIRS 184140]
BSC (Bechtel SAIC Company) 2007. *TMRB Decision Proposal, Waste Forms Handled in Initial Handling Facility.* TMRB-2007-069. Las Vegas, Nevada: Bechtel SAIC Company. ACC: MOL.20080229.0079.
[DIRS 184152]
BSC (Bechtel SAIC Company) 2008. *IED Surface Facility and Environment.* 100-IED-WHS0-00201-000 REV 00D. Las Vegas, Nevada: Bechtel SAIC Company. ACC: ENG.20080211.0001.
[DIRS 184153]
BSC (Bechtel SAIC Company) 2008. *IED Geotechnical and Thermal Parameters III.* 800-IED-MGR0-00403-000 REV 00B. Las Vegas, Nevada: Bechtel SAIC Company. ACC: ENG.20080219.0008.
[DIRS 184156]
Slovic, R.C. 2007. "Project Directive for Gas-Sampling Operations for All Nuclear Facilities." Interoffice Memorandum from R.C. Slovic (BSC) to T.L. Johnson (BSC), 1126072257, November 29, 2007. ACC: CCU.20071130.0011.
[DIRS 184183]
BSC (Bechtel SAIC Company) 2007. *Repository System Codes.* 000-30X-MGR0-01200-000 REV 00E. Las Vegas, Nevada: Bechtel SAIC Company. ACC: ENG.20071101.0022.
[DIRS 184200]
BSC (Bechtel SAIC Company) 2008. *Preclosure Nuclear Safety Design Bases.* 000-30R-MGR0-03500-000-000. Las Vegas, Nevada: Bechtel SAIC Company. ACC:

[DIRS 184235]
BSC (Bechtel SAIC Company) 2007. *TMRB Decision Proposal, Changes, Additions, and Deletions of Parameters in TDR-MGR-MD-000037.* TMRB-2007-066. Las Vegas, Nevada: Bechtel SAIC Company. ACC: RPM.20080114.0031.
[DIRS 184255]
Peterson, S.R. 2007. Contracting Officer Authorization To Bechtel SAIC Company, LLC (BSC), To Offset Emplacement of Naval Spent Nuclear Fuel (SNF) Waste Packages; Contract NO. DE-AC28-01RW12101, LTR. NO. 07-032. Letter from S.R. Peterson (DOE/OCRWM) to T.C. Feigenbaum (BSC), September 27, 2007, 1001071916, OCE:SB-1435. ACC: CCU.20071001.0002.
[DIRS 184409]
BSC (Bechtel SAIC Company) 2007. *Agreement for NUREG-0696, Functional Criteria for Emergency Response Facilities - Final Report.* REG-CRW-RG-000455 REV 01. Las Vegas, Nevada: Bechtel SAIC Company. ACC: DOC.20071126.0002.
[DIRS 184482]
BSC (Bechtel SAIC Company) 2007. *TMRB Decision Proposal, Remove Information No Longer Needed by Thermal/Structural Analysis from Drip Shield IED.* TMRB-2007-048. Las Vegas, Nevada: Bechtel SAIC Company. ACC: RPM.20070928.0002.
[DIRS 184484]
BSC (Bechtel SAIC Company) 2007. *TMRB Decision Proposal, Add TSPA Modeling Basis of Waste Stream Composition and Thermal Decay Histories for LA to IEDs.* TMRB-2007-052. Las Vegas, Nevada: Bechtel SAIC Company. ACC: RPM.20071024.0140.
[DIRS 184486]
BSC (Bechtel SAIC Company) 2007. *TMRB Decision Proposal, Update IED Subsurface Facilities Ground Support Configuration to Current Design.* TMRB-2007-060. Las Vegas, Nevada: Bechtel SAIC Company. ACC: RPM.20071201.0146.
[DIRS 184487]
BSC (Bechtel SAIC Company) 2007. *TMRB Decision Proposal, Updates to IED Waste Package Characteristics - 1999 Design Basis Waste Stream.* TMRB-2007-055. Vas Vegas, Nevada: Bechtel SAIC Company. ACC: RPM.20071024.0144.
[DIRS 184603]
BSC (Bechtel SAIC Company) 2007. *TMRB Decision Proposal, Update Fault / Emplacement Drift Intersection Information.* TMRB-2007-046. Las Vegas, Nevada: Bechtel SAIC Company. ACC: RPM.20070928.0004.
[DIRS 184645]
BSC (Bechtel SAIC Company) 2007. *TMRB Decision Proposal, Additions to the IED Waste Package Radiation Characteristics to Support the Screening Analysis for Criticality FEPs.* TMRB-2007-056. Las Vegas, Nevada: Bechtel SAIC Company. ACC: RPM.20071201.0144.
[DIRS 184939]
Peterson, S.R. 2008. "Contracting Officer Authorization to Bechtel SAIC Company (BSC), to Update the Technical Baseline to Include Handling and Emplacement of Waste Packages up to 18 kW and with an Emplacement Drift Thermal Line Loading of up to 2.0 kW/m; Contract Number DE-AC28-01RW12101, Ltr No. 08-007." Letter from S.R. Peterson (DOE/OCRWM) to T.C. Feigenbaum (BSC), January 23, 2008, 0124082575, OCE:KDL-0355. ACC: CCU.20080124.0010.
[DIRS 184954]
BSC (Bechtel SAIC Company) 2008. *IED Geotechnical and Thermal Parameters II.* 800-IED-MGR0-00402-000-00B. Las Vegas, Nevada: Bechtel SAIC Company. ACC: ENG.20080128.0008.
[DIRS 184955]
BSC (Bechtel SAIC Company) 2008. *IED Geotechnical and Thermal Parameters IV.* 800-IED-MGR0-00404-000-00B. Las Vegas, Nevada: Bechtel SAIC Company. ACC: ENG.20080128.0009
[DIRS 184963]
BSC (Bechtel SAIC Company) 2008. *TMRB Decision Proposal, Clarify the Geologic Repository Operations Area Surface Facilities Boundary.* TMRB-2008-007. Las Vegas, Nevada: Bechtel SAIC Company. ACC:
[DIRS 184965]
BSC (Bechtel SAIC Company) 2008. *TMRB Decision Proposal, Rock Mass Thermal Expansion.* TMRB-2007-067. Las Vegas, Nevada: Bechtel SAIC Company.
[DIRS 184966]
BSC (Bechtel SAIC Company) 2008. *TMRB Decision Proposal, Water Table DTN.* TMRB-2007-065. Las Vegas, Nevada: Bechtel SAIC Company.
[DIRS 184967]
BSC (Bechtel SAIC Company) 2008. *TMRB Decision Proposal, Preclosure Rockfall.* TMRB-2007-072. Las

Vegas, Nevada: Bechtel SAIC Company.
[DIRS 184991]
BSC (Bechtel SAIC Company) 2008. *IED Seismic and Seismic Consequence Data.* 800-IED-MGR0-00701-000 REV 00B. Las Vegas, Nevada: Bechtel SAIC Company.
[DIRS 185008]
BSC (Bechtel SAIC Company) 2008. *Project Operational and Performance Requirements.* TDR-MGR-ME-000004 REV 02. Las Vegas, Nevada: Bechtel SAIC Company. ACC: ENG.20080206.0001.
[DIRS 185027]
BSC (Bechtel SAIC Company) 2008. *Initial Handling Facility Fire Hazard Analysis.* 51A-M0A-FP00-00100-000-00C. Las Vegas, Nevada: Bechtel SAIC Company. ACC: ENG.20080212.0007.
[DIRS 185028]
BSC (Bechtel SAIC Company) 2008. *Wet Handling Facility Fire Hazard Analysis.* 050-M0A-FP00-00100-000-00C. Las Vegas, Nevada: Bechtel SAIC Company. ACC: ENG.20080213.0001.
[DIRS 185044]
BSC (Bechtel SAIC Company) 2008. *TMRB Decision Proposal, Add Volcanic Data to IED to Support External Events Screening Analysis.* TMRB-2007-075 REV 01. Las Vegas, Nevada: Bechtel SAIC Company.
[DIRS 185045]
BSC (Bechtel SAIC Company) 2008. *TMRB Decision Proposal, Add Volcanic Ashfall Data to IED to Support External Events Screening Analysis.* TMRB-2008-001. Las Vegas, Nevada: Bechtel SAIC Company.
[DIRS 185046]
BSC (Bechtel SAIC Company) 2008. *TMRB Decision Proposal, Add Alluvium Thickness DTN to IED.* TMRB-2008-005. Las Vegas, Nevada: Bechtel SAIC Company.
[185053]
BSC (Bechtel SAIC Company) 2008. *TMRB Decision Proposal, Add Seismic and Waste Package Damage Data to IEDs to support Seismic and Structural Container Analyses for the PCSA.* TMRB-2008-008 Rev 1. Las Vegas, Nevada: Bechtel SAIC Company.
[DIRS 185061]
BSC (Bechtel SAIC Company) 2007. *Adding Temperature Data to Emplacement Drift Configuration and Environment IED.* TMRB-2007-009. Las Vegas, NV: Bechtel SAIC Company. ACC: RPM.20070910.0126.
DIRS 185062]
BSC (Bechtel SAIC Company) 2007. *Update the Emplacement Drift Configuration and Environment IED.* TMRB-2007-017. Las Vegas, Nevada: Bechtel SAIC Company. ACC: RPM.20070910.0130.
[DIRS 185084]

BSC (Bechtel SAIC Company) 2007. *TMRB Decision Proposal, Add Effective Thermal Conductivity for Rublle to IED.* TMRB-2007-012 Rev 01. Las Vegas, Nevada: Bechtel SAIC Company. ACC: MOL.20080229.0076.

[DIRS 185086]
BSC (Bechtel SAIC Company) 2007. *TMRB Decision Proposal, Add Thermal Rock Parameters to IEDs to Support Thermal/Structural Analyses.* TMRB-2007-074. Las Vegas, Nevada: Bechtel SAIC Company. ACC: MOL.20080229.0078.
[DIRS 185087]
BSC (Bechtel SAIC Company) 2008. *TMRB Decision Proposal, Add Seismic & Rock Fall Information to IED to Support Evaluation of an Event Sequence for Waste Package Burial.* TMRB-2008-009. Las Vegas, Nevada: Bechtel SAIC Company. ACC: MOL.20080229.0077.

34.2 Codes, Standards, Regulations, and Procedures

The following codes, standards, regulations, and procedures are referenced by the DIRS number:

[DIRS 100016]
Nuclear Waste Policy Amendments Act of 1987. Public Law No. 100-203, 101 Stat. 1330. TIC: 223717.
[DIRS 101903]
NRC (U.S. Nuclear Regulatory Commission) 1997. *Standard Review Plan for Dry Cask Storage Systems.* NUREG-1536. Washington, D.C.: U.S. Nuclear Regulatory Commission. ACC: MOL.20010724.0307.
[DIRS 103936]
Resource Conservation and Recovery Act of 1976. 42 U.S.C. 6901 et seq. Internet Accessible.
[DIRS 103956]
DOE Order 5400.5 Change 2. 1993. *Radiation Protection of the Public and the Environment.* Washington, D.C.: U.S. Department of Energy. ACC: MOL.20050516.0404.

[DIRS 104040]
NAC (Nevada Administrative Code) 445A. 2006. Water Controls. 258975.
[DIRS 104939]
NRC (U.S. Nuclear Regulatory Commission) 1980. *Control of Heavy Loads at Nuclear Power Plants.* NUREG-0612. Washington, D.C.: U.S. Nuclear Regulatory Commission. TIC: 209017.
[DIRS 144423]
DOE G 440.1-5. 1995. *Implementation Guide for Use with DOE Orders 420.1 and 440.1 Fire Safety Program*. Washington, D.C.: U.S. Department of Energy. ACC: MOL.20050518.0094.
[DIRS 145476]
DOE O 470.1 Change 1. 1996. *Safeguards and Security Program*. Washington, D.C.: U.S. Department of Energy. TIC: 238159.
[DIRS 145735]
ANSI N14.5-97. 1998. *American National Standard for Radioactive Materials - Leakage Tests on Packages for Shipment.* New York, New York: American National Standards Institute. TIC: 247029.
[DIRS 147465]
ASTM B 575-99a 1999. *Standard Specification for Low-Carbon Nickel-Molybdenum-Chromium, Low-Carbon Nickel-Chromium-Molybdenum, Low-Carbon Nickel-Chromium-Molybdenum-Copper, Low-Carbon Nickel-Chromium-Molybdenum-Tantalum, and Low-Carbon Nickel-Chromium-Molybdenum-Tungsten Alloy Plate, Sheet, and Strip*. West Conshohocken, Pennsylvania: American Society for Testing and Materials. TIC: 247534.
[DIRS 151873]
NAC (Nevada Administrative Code) 534. 2006. Underground Water and Wells. 258960.
[DIRS 155040]
Regulatory Guide 1.189. 2001. *Fire Protection for Operating Nuclear Power Plants.* Washington, D.C.: U.S. Nuclear Regulatory Commission. ACC: MOL.20060105.0191.
[DIRS 157789]
ASHRAE (American Society of Heating, Refrigerating & Air-Conditioning Engineers) 2001. *2001 ASHRAE Handbook, Fundamentals*. Inch-Pound Edition. Atlanta, Georgia: American Society of Heating, Refrigerating and Air-Conditioning Engineers. TIC: 249910.
[DIRS 159450]
DOE O 420.1A. 2002. *Facility Safety*. Washington, D.C.: U.S. Department of Energy. ACC: MOL.20050411.0135.
[DIRS 159544]
ASME NQA-1-2000. 2001. *Quality Assurance Requirements for Nuclear Facility Applications.* New York, New York: American Society of Mechanical Engineers. TIC: 253110.
[DIRS 164287]
ANSI/ISA-S7.0.01-1996. 1996. *Quality Standard for Instrument Air*. Research Triangle Park, North Carolina: Instrument Society of America. TIC: 254082.
[DIRS 164538]
NRC (U.S. Nuclear Regulatory Commission) 2003. *Interim Staff Guidance - 18. The Design/Qualification of Final Closure Welds on Austenitic Stainless Steel Canisters as Confinement Boundary for Spent Fuel Storage and Containment Boundary for Spent Fuel Transportation.* ISG-18. Washington, D.C.: U.S. Nuclear Regulatory Commission. TIC: 254660.
[DIRS 165111]
NRC (U.S. Nuclear Regulatory Commission) [1989]. "Seismic System Analysis." Revision 2 of Section 3.7.2 of *Standard Review Plan [for the Review of Safety Analysis Reports for Nuclear Power Plants]*. NUREG-0800. Washington, D.C.: U.S. Nuclear Regulatory Commission. ACC: MOL.20030910.0151.
[DIRS 165112]
NRC (U.S. Nuclear Regulatory Commission) 1989. "Seismic Subsystem Analysis." Revision 2 of Section 3.7.3 of *Standard Review Plan [for the Review of Safety Analysis Reports for Nuclear Power Plants]*. NUREG-0800. Washington, D.C.: U.S. Nuclear Regulatory Commission. ACC: MOL.20030910.0152.
[DIRS 166013]
ASME B46.1-2002. 2003. *Surface Texture (Surface Roughness, Waviness and Lay).* New York, New York: American Society of Mechanical Engineers. TIC: 257359.
[DIRS 167097]
DOE-HDBK-1169-2003. *Nuclear Air Cleaning Handbook.* Washington, D.C.: U.S. Department of Energy. ACC: MOL.20060105.0204.
[DIRS 169910]
AAR (Association of American Railroads) 2004. *Manual of Standards and Recommended Practices*. Washington, D.C.: Association of American Railroads. TIC: 256289.

[DIRS 170332]
NRC (U.S. Nuclear Regulatory Commission) 2003. *Interim Staff Guidance - 11, Revision 3. Cladding Considerations for the Transportation and Storage of Spent Fuel.* ISG-11, Rev. 3. Washington, D.C.: U.S. Nuclear Regulatory Commission. ACC: MOL.20040721.0065.
[DIRS 171799]
ASHRAE (American Society of Heating, Refrigerating and Air-Conditioning Engineers) 2004. *2004 ASHRAE® Handbook, Heating, Ventilating, &Air-Conditioning Systems and Equipment.* Inch-Pound Edition. Atlanta, Georgia: American Society of Heating, Refrigerating and Air-Conditioning Engineers. TIC: 256641.
[DIRS 171846]
ASME (American Society of Mechanical Engineers) 2004. *2004 ASME Boiler and Pressure Vessel Code.* 2004 Edition. New York, New York: American Society of Mechanical Engineers. TIC: 256479.
[DIRS 172422]
DOE O 435.1. 1999. *Radioactive Waste Management*. Washington, D.C.: U.S. Department of Energy. ACC: MOL.20050411.0142.
[DIRS 173511]
NFPA 110. 2005. *Standard for Emergency and Standby Power Systems*. 2005 Edition. Quincy, Massachusetts: National Fire Protection Association. TIC: 257240.
[DIRS 175834]
AASHTO (American Association of State Highway and Transportation Officials) 2004. *A Policy on Geometric Design of Highways and Streets*. 5th Edition. Washington, D.C.: American Association of State Highway and Transportation Officials. TIC: 257443.
[DIRS 176259]
IEEE Std 344-2004. 2005. *IEEE Recommended Practice for Seismic Qualification of Class 1E Equipment for Nuclear Power Generating Stations*. New York, New York: Institute of Electrical and Electronics Engineers. TIC: 258050.
[DIRS 176341]
IEEE Std 260.1-2004. 2004. *IEEE Standard Letter Symbols for Units of Measurement (SI Units, Customary Inch-Pound Units, and Certain Other Units).* New York, New York: Institute of Electrical and Electronics Engineers. TIC: 258588.
[DIRS 176639]
DOE O 151.1C. 2005. *Comprehensive Emergency Management System*. Washington, D.C.: U.S. Department of Energy. ACC: MOL.20060413.0157.
[DIRS 176641]
DOE O 450.1, Change 2. 2005. *Environmental Protection Program*. Washington, D.C.: U.S. Department of Energy. ACC: MOL.20060413.0155.
[DIRS 176774]
ASTM A 276-06. 2006. *Standard Specification for Stainless Steel Bars and Shapes.* West Conshohocken, Pennsylvania: ASTM International. TIC: 258258.
[DIRS 177498]
Atomic Weapons and Special Nuclear Materials Rewards Act. 50 U.S.C. 47a-47f. Internet Accessible.
[DIRS 177522]
40 CFR 61. 2006. Protection of Environment: National Emission Standards for Hazardous Air Pollutants. Internet Accessible.
[DIRS 177544]
NFPA 221. 2005. *Standard for High Challenge Fire Walls, Fire Walls, and Fire Barrier Walls.* 2006 Edition. Quincy, Massachusetts: National Fire Protection Association. TIC: 258552.
[DIRS 177651]
IEEE/ASTM SI 10-2002. 2002. *American National Standard for Use of the International System of Units (SI): The Modern Metric System.* New York, New York: Institute of Electrical and Electronics Engineers. TIC: 257712 .
[DIRS 177843]
40 CFR 262. 2006. Protection of Environment: Standards Applicable to Generators of Hazardous Waste. Internet Accessible.
[DIRS 177851]
ANSI/ANS-57.7-1988 (Reaffirmed 1997). 1997. *American National Standard, Design Criteria for an Independent Spent Fuel Storage Installation (Water Pool Type).* La Grange Park, Illinois: American Nuclear Society. TIC: 258660.
[DIRS 177965]
NFPA 101. 2006. *Life Safety Code, with Errata and Tentative Interim Amendments.* 2006 Edition. Quincy, Massachusetts: National Fire Protection Association. TIC: 258709.

[DIRS 178058]
ASTM A 887-89 (Reapproved 2004). 2004. *Standard Specification for Borated Stainless Steel Plate, Sheet, and Strip for Nuclear Application.* West Conshohocken, Pennsylvania: American Society for Testing and Materials. TIC: 258746.
[DIRS 178562]
DOE M 470.4-2, Change 1. 2006. *Physical Protection.* Washington, D.C.: U. S. Department of Energy. Internet Accessible.
[DIRS 180319]
10 CFR 63. 2007. Energy: Disposal of High-Level Radioactive Wastes in a Geologic Repository at Yucca Mountain, Nevada. Internet Accessible.
[DIRS 181307]
AAR (Association of American Railroads) 2006. *Field Manual of the Interchange Rules.* Washington, D.C.: Association of American Railroads. TIC: 258292.
[DIRS 181962]
10 CFR 20. 2007. Energy: Standards for Protection Against Radiation. Internet Accessible.
[DIRS 181964]
10 CFR 50. 2007. Energy: Domestic Licensing of Production and Utilization Facilities. Internet Accessible.
[DIRS 181966]
10 CFR 61. 2006. Energy: Licensing Requirements for Land Disposal of Radioactive Waste. Internet Accessible.
[DIRS 181967]
10 CFR 71. 2007. Energy: Packaging and Transportation of Radioactive Material. Internet Accessible.
[DIRS 181968]
10 CFR 72. 2007. Energy: Licensing Requirements for the Independent Storage of Spent Nuclear Fuel, High-Level Radioactive Waste, and Reactor-Related Greater than Class C Waste. Internet Accessible.
[DIRS 181969]
10 CFR 73. 2007. Energy: Physical Protection of Plants and Materials. Internet Accessible.
[DIRS 181976]
10 CFR 74. 2007. Energy: Material Control and Accounting of Special Nuclear Material. Internet Accessible.
[DIRS 181979]
10 CFR 1041. 2007. Energy: Enforcement of Nondiscrimination on the Basis of Handicap in Programs or Activities Conducted by the Department of Energy. Internet Accessible.
[DIRS 182678]
10 CFR 961. 2007. Energy: Standard Contract for Disposal of Spent Nuclear Fuel and/or High-Level Radioactive Waste. Internet Accessible.
[DIRS 182679]
29 CFR 1910. 2007. Labor: Occupational Safety and Health Standards. Internet Accessible.
[DIRS 182681]
10 CFR 70. 2007. Energy: Domestic Licensing of Special Nuclear Material. Internet Accessible.
[DIRS 182683]
29 CFR 1926. 2007. Labor: Safety and Health Regulations for Construction. Internet Accessible.
[DIRS 182868]
10 CFR 851. 2007. Energy: Worker Safety and Health Program (Eff 02/09/07): Internet Accessible.
[DIRS 184241]
49 CFR 172. 2007. Transportation: Hazardous Materials Table, Special Provisions, Hazardous Materials Communications, Emergency Response Information, and Training Requirements. Internet Accessible.
[DIRS 184242]
49 CFR 173. 2007. Transportation: Shippers--General Requirements for Shipments and Packagings. Internet Accessible.
[DIRS 184243]
40 CFR 112. 2007. Protection of Environment: Oil Pollution Prevention. Internet Accessible.
[DIRS 184244]
40 CFR 143. 2007. Protection of Environment: National Secondary Drinking Water Regulations.
[DIRS 184246]
40 CFR 243. 2007. Protection of Environment: Guidelines for the Storage and Collection of Residential, Commercial, and Institutional Solid Waste. Internet Accessible.
[DIRS 184247]
40 CFR 246. 2007. Protection of Environment: Source Separation for Materials Recovery Guidelines. Internet Accessible.
[DIRS 184250]

40 CFR 50. 2007. Protection of Environment: National Primary and Secondary Ambient Air Quality Standards. Internet Accessible.
[DIRS 184251]
40 CFR 141. 2007. Protection of Environment: National Primary Drinking Water Regulations. Internet Accessible.
[DIRS 184252]
40 CFR 191. 2007. Protection of Environment: Environmental Radiation Protection Standards for Management and Disposal of Spent Nuclear Fuel, High-Level and Transuranic Radioactive Wastes. Internet Accessible.
[DIRS 184625]
ACGIH (American Conference of Governmental Industrial Hygienists) 2007. *TLVs® and BEIs®, Based on the Documentation of the Threshold Limit Values for Chemical Substances and Physical Agents & Biological Exposure Indices.* Cincinnati, Ohio: American Conference of Governmental Industrial Hygienists. TIC: 258916.