BSC

Design Calculation or Analysis Cover Sheet

Complete only applicable items.

1. QA: QA
2. Page 1

3. System	4. Document Identifier
Subsurface Facility	800-KMC-SS00-00200-000-00B

5. Title
Underground Layout Configuration for LA

6. Group
Subsurface Mining

7. Document Status Designation
☐ Preliminary ☒ Committed ☐ Confirmed ☐ Cancelled/Superseded

8. Notes/Comments

This calculation has an "included with" relationship* with *Underground Layout Configuration* 800-P0C-MGR0-00100-000-00E. This calculation develops a design change for the north extension of the access main and effects design reconfiguration of Panels 1, 2, 3-West, 3-East, and 4, superseding those corresponding figures and tables in the *Underground Layout Configuration.* The modified configuration for the subsurface repository resides within the design boundaries of the *Underground Layout Configuration* and, as such, does not adversely influence or rearrange waste emplacement from the design principles and constraints established in the *Underground Layout Configuration.*

*EG-PRO-3DP-G03T-00901 Rev. 3 procedure is used to document and update specific data/relationships links among affected engineering documents in InfoWorks.

Changes are summarized in the Purpose, Section 1, and revision bars are used to identify those sections that have been revised per EG-PRO-3DP-G04B-00037 Rev. 8.

Attachments		Total Number of Pages
Attachment I	ULC North Ramp and Access Main Intersection	8
Attachment II	Design Impediment Mitigation for ULCLA	4
Attachment III	Panel 1 Optimization for ULCLA	3
Attachment IV	Available Emplacement Drift Length in ULCLA	6
Attachment V	ULCLA Excavation Dimensions Worksheet	10
Attachment VI	Verification of Waste Package Endpoint Coordinates by an Alternative Method	20
Attachment VII	Electronic MicroStation Files (includes two CD's)	2

RECORD OF REVISIONS

9. No.	10. Reason For Revision	11. Total # of Pgs.	12. Last Pg. #	13. Originator (Print/Sign/Date)	14. Checker (Print/Sign/Date)	15. EGS (Print/Sign/Date)	16. Approved/Accepted (Print/Sign/Date)
00A	Initial Issue	99	VII-2	T. Lahnalampi	J.Steinhoff	N/A	R. Saunders
00B	Incorporate turnout design developed in the *Turnout Design and Configuration* 800-KMC-SSD0-00900-000-00A and resolve CR-10113.	108	VII-2	T. Lahnalampi T Lahnalampi 7/27/07	J.Steinhoff J Steinhoff 7/27/07	E. Thomas Edward C Thomas 7/27/07	R. Saunders Robert S. Saunders 7/27/07

DISCLAIMER

The calculations contained in this document were developed by Bechtel SAIC Company, LLC (BSC) and are intended solely for the use of BSC in its work for the Yucca Mountain Project.

REVISION HISTORY

Revision Number	Effective Date	Revision Description
00A	11/15/06	Initial Issue
00B	07/27/07	Revised Section 2 to reflect current format. In order to resolve CR 10113 the following changes have been made: Moved Sections 2.1.16 to Section 4.3.2. Deleted Section 2.1.17. Moved Sections 2.1.18 through 2.1.24 into Section 6.1. Moved Sections 2.2.1 through 2.2.10 and Section 2.2.12 into Table 1. Deleted the initial issue version of Section 2.2.11. Deleted Assumption 3.2.4 and moved Assumption 3.2.9 to Section 6.1.8. Other changes to incorporate the current turnout design include: Updated Section 4. Created a new Section 6.5 to include turnout design. Revised Table 3 (formerly Table 2), Table 4 (formerly Table 3), Table 5 (formerly Table 4), and Table 6 (formerly Table 5) to incorporate turnout design length. Revised Table 7 (formerly Table 6) to reflect current design parameters. Revised Table 9 (formerly Table 8) to reflect current turnout design and correct Access/Exhaust Main and Exhaust Raise Access Drift lengths. Revised Tables 11 through 15 (formerly Tables 10 through 14) to reflect elevation change due to current turnout design. Revised Attachment V to incorporate turnout design. Updated Attachment VII to reflect current turnout design. NOTE: In compliance with EG-PRO-3DP-G04B-00037, Section 3.6.2, Attachment VI, *Verification of Waste Package Endpoint Coordinates by an Alternative Method*, coordinates in the horizontal plane are not required to be re-verified since the waste package endpoint coordinates in the horizontal plane do not change with the inclusion of the current turnout design.

CONTENTS

Page

1. PURPOSE 9

2. REFERENCES 10
   2.1 PROCEDURE/DIRECTIVES 10
   2.2 DESIGN INPUTS 10
   2.3 DESIGN CONSTRAINTS 11
   2.4 DESIGN OUTPUTS 11

3. ASSUMPTIONS 12
   3.1 ASSUMPTIONS REQUIRING VERIFICATION 12
   3.2 ASSUMPTIONS NOT REQUIRING VERIFICATION 12

4. METHODOLOGY 14
   4.1 QUALITY ASSURANCE 14
   4.2 USE OF SOFTWARE 14
   4.3 DESIGN METHODOLOGY 15

5. LIST OF ATTACHMENTS 18

6. BODY OF CALCULATION 19
   6.1 DESIGN CONTROLS 19
   6.2 CURRENT UNDERGROUND LAYOUT CONFIGURATION (ULC) 20
   6.3 ACCESS MAIN DESIGN IMPEDIMENT RESOLUTION 23
   6.4 EMPLACEMENT PANEL 1 OPTIMIZATION 25
   6.5 TURNOUT DESIGN 27
   6.6 EMPLACEMENT PANEL COMPILATION 30
   6.7 OBSERVATION DRIFT 45
   6.8 VENTILATION INTERFACE 45

7. RESULTS AND CONCLUSIONS 46
   7.1 INCLUSION OF DESIGN PARAMETERS, INPUTS AND ASSUMPTIONS 46
   7.2 SHAFT NOMENCLATURE 48
   7.3 UNDERGROUND LAYOUT CONFIGURATION FOR LA 48
   7.4 EXCAVATION SUMMARY 50
   7.5 AVAILABLE EMPLACEMENT LENGTH (METERS) 51
   7.6 WASTE PACKAGE ENDPOINT COORDINATES (METERS) 51
   7.7 EXHAUST SHAFT #1 COORDINATES 55

ATTACHMENT I ULC NORTH RAMP AND ACCESS MAIN INTERSECTION I-1

ATTACHMENT II DESIGN IMPEDIMENT MITIGATION FOR ULCLA II-1

ATTACHMENT III PANEL 1 OPTIMIZATION FOR ULCLA III-1

CONTENTS (Continued)

Page

ATTACHMENT IV AVAILABLE EMPLACEMENT DRIFT LENGTH IN THE ULCLA IV-1

ATTACHMENT V ULCLA EXCAVATION DIMENSIONS WORKSHEET V-1

ATTACHMENT VI VERIFICATION OF WASTE PACKAGE ENDPOINT COORDINATES BY AN ALTERNATIVE METHOD VI-1

ATTACHMENT VII ELECTRONIC MICROSTATION FILES VII-1

FIGURES

Page

Figure 1. Underground Layout Configuration 21
Figure 2. North Ramp and Access Main Intersection 22
Figure 3. Section View Through #11 Frog.....22
Figure 4. Bypass Alternative Excavation.....24
Figure 5. Emplacement Panel Configuration 26
Figure 6. Typical Turnout Plan View.....27
Figure 7. Panel 1.....31
Figure 8. Panel 2.....34
Figure 9. Panel 3.....38
Figure 10. Panel 4.....43
Figure 11. Underground Layout Configuration for LA 49
Figure I-1. North Ramp and Future North Extension of the Access Main Intersection I-3
Figure I-2. Section View at Common Elevation Station 00+00.00 .....I-4
Figure I-3. Section View at Station 00+50.00 .....I-5
Figure I-4. Section View at Station 00+75.00 .....I-5
Figure I-5. Section View at Station 01+00.00 .....I-6
Figure I-6. Section View at Station 01+25.00 .....I-6
Figure I-7. Section View at Station 01+50.00 .....I-7
Figure I-8. Section View at Station 02+00.00 .....I-7
Figure I-9. Section View at Station 02+50.00 .....I-8
Figure II-1. Excavation Geometry for the Bypass Alternative II-4
Figure III-1. Emplacement Panel Configuration III-3

TABLES

Page

Table 1. Design Parameters 16
Table 2. Turnout Excavation Dimensions (Typical)....28
Table 3. Panel 1....32
Table 4. Panel 2....35
Table 5. Panel 3....39
Table 6. Panel 4....44
Table 7. Design Parameter Inclusion....46
Table 8. Shaft Nomenclature 48
Table 9. Overall Excavation Summary for the ULCLA 50
Table 10. Emplacement Drift Available in the ULCLA (Meters) 51
Table 11. Panel 1 Waste Package End Point Coordinates (Meters) 52
Table 12. Panel 2 Waste Package End Point Coordinates (Meters) 52
Table 13. Panel 3 East Waste Package End Point Coordinates (Meters) 53
Table 14. Panel 3 West Waste Package End Point Coordinates (Meters) 54
Table 15. Panel 4 Waste Package End Point Coordinates (Meters) 55
Table 16. Exhaust Shaft #1 Coordinates....55
Table I-1. Spatial Variance Between the Access Main and the North Ramp in the ULC....I-8
Table IV-1. Panel 1 Available Emplacement Drift Length (Meters) IV-2
Table IV-2. Panel 2 Available Emplacement Drift Length (Meters) IV-3
Table IV-3. Panel 3 East Available Emplacement Drift Length (Meters) IV-4
Table IV-4. Panel 3 West Available Emplacement Drift Length (Meters)....IV-5
Table IV-5. Panel 4 Available Emplacement Drift Length (Meters) IV-6
Table V-1 Panel 1.... V-2
Table V-2 Panel 2.... V-3
Table V-3 Panel 3.... V-5
Table V-4. Panel 4.... V-8
Table V-5. Turnout and Emplacement Drift Excavation Summary.... V-10
Table VII-1. MicroStation Files on CD VII-2

ACRONYMS AND ABBREVIATIONS

AREMA	American Railway Engineering and Maintenance of Way Association
BINFRA	Bechtel Infrastructure Corporation
BSC	Bechtel SAIC Company
CD	compact disc
CSA	civil structural architectural
CR	Condition Report
E	East
ECRB	Enhanced Characterization of the Repository Block
ESF	Exploratory Studies Facility
ft	Feet
IED	Information Exchange Drawing
LA	license application
m	meter
MTHM	metric tons of heavy metal
m^3/s	cubic meters per second
N	North
N/A	not applicable
STA	station
TBM	tunnel boring machine
TEV	Transport and Emplacement Vehicle
TMRB	Technical Management Review Board
ULC	Underground Layout Configuration
ULCLA	Underground Layout Configuration for LA
VPT	Vertical Point of Tangency
W	West
WPEC	Waste Package Endpoint Coordinate(s)

1. PURPOSE

The purpose of the *Underground Layout Configuration for LA* (ULCLA) calculation is to develop a design solution to the construction interference between the North Ramp and the future north extension of the access main and to make changes to the *Underground Layout Configuration* (ULC) (Reference 2.2.4) that support the design solution. The reconfiguration of the ULC has received Technical Management Review Board (TMRB) technical endorsement (Reference 2.2.6, Attachment 3). Additionally, the ULCLA will include the turnout configuration developed in *Turnout Design and Configuration* (Reference 2.2.9). The ULCLA will be used for license application.

In this revision changes have taken place to the initial issue of this document that includes:

- The combination of resolving the reference errors noted in Condition Report, CR-10113, and updating Section 2, *References*, due to format change, makes significant changes to Section 2.2, *Design Inputs* and results in extensive modification to these areas.
- Section 4.1, *Quality Assurance*, has been changed to reflect the current procedure.
- Section 4.3, *Design Methodology*, includes major changes to Table 1 to incorporate current requirements and consolidates design parameters.
- The latest version of the turnout design (see Section 6.5) has been incorporated into the underground layout configuration which impacts all pertinent discussion related to the turnout, each excavation summary table, and the elevation of the individual emplacement drifts.
- Section 7, *Results and Conclusions*, discussion has been updated to include the impact of the revised turnout design that changes all the emplacement drift elevations.

The scope of this calculation includes:

- Incorporate the turnout configuration that facilitates waste emplacement with the transport and emplacement vehicle (TEV).
- The elevation of each emplacement drift will be adjusted by a vertical dimension that is a function of the turnout configuration.
- Limit changes to the *Underground Layout Configuration* (ULC) to the extent practicable.
- Effect necessary modifications to Panels 1, 2, 3-East, 3-West, and 4 that are compatible with a reconfigured ULC.
- Document excavation dimensions that reflect the ULCLA.
- Document waste package endpoint coordinates (WPEC) that reflect the ULCLA.

This calculation will closely examine the intersection of the North Ramp and the future north extension of the access main for potential construction issues that can arise by integrating the two excavations which have diverging gradients. Mitigation of the gradient interference between the two excavations leads to a relocation of Panel 1 and an optimization of the available emplacement area in the vicinity of Panel 1 and the adjoining emplacement panels. As a consequence, the waste package endpoint coordinates that are affected by a reorganization of Panel 1 and the emplacement area in the vicinity of Panel 1 are redefined in this calculation.

This calculation has an "included with" relationship with *Underground Layout Configuration,* 800-P0C-MGR0-00100-000-00E. (The "included with" relationship is used to document and update specific data/relationships links among affected engineering documents in InfoWorks.) This calculation develops a design change for the north extension of the access main and affects design reconfiguration of Panels 1, 2, 3-West, 3-East, and 4, superseding the corresponding figures and tables in the *Underground Layout Configuration*.

In doing so, this calculation invokes the design requirements from the *Underground Layout Configuration* (Reference 2.2.4, Section 7.1). This calculation does not reiterate the design parameters used to develop the *Underground Layout Configuration* pertaining to geologic setting, emplacement drift orientation, waste inventory, water table standoff, perched water standoff, fault standoff, standoff from certain geologic units, the Repository Host Horizon, and overburden cover. Also, this calculation accepts the design principles applied in the development of the *Underground Layout Configuration* (Reference 2.2.4, Section 7.2) that include the capability to operate in the higher-temperature mode, a modular design, placing surface openings outside the probable maximum flood area, preventing surface water ingress, having the subsurface water drainage directed away from the emplacement area, providing for post-closure water drainage, and recognizing a waste package standoff from quaternary faults with potential for significant displacement.

2. REFERENCES

2.1 PROCEDURE/DIRECTIVES

2.1.1 EG-PRO-3DP-G04B-00037, Rev. 08. *Calculations and Analyses*. Las Vegas, Nevada: Bechtel SAIC Company. ACC: ENG.20070420.0002.

2.1.2 IT-PRO-0011, Rev. 5. *Software Management*. Las Vegas, Nevada: Bechtel SAIC Company. ACC: DOC.20070521.0001.

2.2 DESIGN INPUTS

2.2.1 AREMA (American Railway Engineering and Maintenance-of-Way Association) 2006. *2006 Portfolio of Trackwork Plans*. Lanham, Maryland: American Railway Engineering and Maintenance-of-Way Association. TIC: 258536. [DIRS 177494]

2.2.2 BINFRA (Bechtel Infrastructure Corporation) 2002. *Yucca Mountain-MGR, Subsurface Transporter System Review*. [New York, New York]: Bechtel Infrastructure Corporation. ACC: MOL.20021030.0077. [DIRS 160685]

2.2.3 BSC (Bechtel SAIC Company) 2007. *Performance Confirmation Facilities.* 800-KMC-MGR0-00100-000-00B. Las Vegas, Nevada: Bechtel SAIC Company. ACC: ENG.20070725.0003

2.2.4 BSC (Bechtel SAIC Company) 2003. *Underground Layout Configuration*. 800-P0C-MGR0-00100-000-00E. Las Vegas, Nevada: Bechtel SAIC Company. ACC: ENG.20031002.0007; ENG.20050817.0005. [DIRS 165572]

2.2.5 BSC (Bechtel SAIC Company) 2004. *D&E / PA/C IED Emplacement Drift Configuration and Environment [Sheet 1 of 2]*. 800-IED-MGR0-00201-000-00B. Las Vegas, Nevada: Bechtel SAIC Company. ACC: ENG.20040326.0001. [DIRS 168489]

2.2.6 BSC (Bechtel SAIC Company) 2006. *Bechtel SAIC Company, LLC, Technical Management Review Board (TMRB) Meeting Minutes, August 3, 2006, 11:00 AM, Building 10 Room D150, with attachments*. ACC: MOL.20061004.0160. [DIRS 177604]

2.2.7 BSC (Bechtel SAIC Company) 2006. *Basis of Design for the TAD Canister-Based Repository Design Concept*. 000-3DR-MGR0-00300-000-000. Las Vegas, Nevada: Bechtel SAIC Company. ACC: ENG.20061023.0002. [DIRS 177636]

2.2.8 BSC (Bechtel SAIC Company) 2007. *Postclosure Modeling and Analyses Design Parameters.* TDR-MGR-MD-000037 REV 01 ACN 02. Las Vegas, Nevada: Bechtel SAIC Company. ACC: ENG.20070613.0002.

2.2.9 BSC (Bechtel SAIC Company) 2007. *Turnout Design and Configuration*. 800-KMC-SSD0-00900-000-00A. Las Vegas, Nevada: Bechtel SAIC Company. ACC: ENG.20070625.0041.

2.2.10 BSC (Bechtel SAIC Company) 2007. *Project Design Criteria Document*. 000-3DR-MGR0-00100-000 REV 006. Las Vegas, Nevada: Bechtel SAIC Company. ACC: ENG.20061201.0005; ENG.20070111.0028; ENG.20070621.0002.

2.2.11 IEEE/ASTM SI 10-2002. 2002. *American National Standard for Use of the International System of Units (SI): The Modern Metric System*. New York, New York: Institute of Electrical and Electronic Engineers. TIC: 257712. [DIRS 177651]

2.3 DESIGN CONSTRAINTS

No design constraints.

2.4 DESIGN OUTPUTS

The design output is the waste package endpoint coordinates listed in the tables found in Section 7.6 that will be used to revise *IED Subsurface Facilities Geological Data*, document number 800-IED-WIS0-01801-000-00B. The additional design output, such as the electronic file of the centerlines of the ULCLA submitted as a record in CD format, would form the basis to revise drawings, *Subsurface-Underground Layout Configuration for LA General Arrangement*

(800-KM0-SS00-00301-000-00A), *Subsurface-Underground Layout Configuration for LA Panel 1 Plan* (800-KM0-SS00-00302-000-00A), *Subsurface-Underground Layout Configuration for LA Panel 2 Plan* (800-KM0-SS00-00303-000-00A), *Subsurface-Underground Layout Configuration for LA Panel 3 Plan* (800-KM0-SS00-00304-000-00A), and *Subsurface-Underground Layout Configuration for LA Panel 4 Plan* (800-KM0-SS00-00305-000-00A).

3. ASSUMPTIONS

3.1 ASSUMPTIONS REQUIRING VERIFICATION

Not used.

3.2 ASSUMPTIONS NOT REQUIRING VERIFICATION

3.2.1 Location of Waste Package in Emplacement Drift

Assumption: The minimum standoff from first waste package in the emplacement drift to the end of the turnout is 1.5 m (5 ft) and the minimum standoff from the last waste package to the centerline of the exhaust main is 15 m (49 ft). Used in Assumption 3.2.2, and Sections 4.3.1, 6.5.1, and 7.1.

Rationale: The minimum standoff distances are consistent with the *Underground Layout Configuration* (Reference 2.2.4, Section 6.3) that establishes the location of the first and last waste packages at 1.5 m from the end of the turnout and 15 m from the centerline of the exhaust main.

Note: The basis for the rationale for 1.5 m (5 ft) standoff from the end of the turnout to the first waste package was that 1.5 m (5 ft) is required to maintain a sufficient length of emplacement drift to ensure that the waste package was not located at the edge of the elevation difference between the turnout and the emplacement drift. The revised turnout design (see Section 6.5) no longer includes an elevation differential. As a result, the cited turnout standoff no longer has any basis. However, to maintain continuity with the current emplacement drift lineal dimensioning carried throughout this calculation and the ULC, the 1.5 m (5 ft) standoff is used in this revision.

Correspondingly, the 15 m standoff on the exhaust main side has become a derived requirement (Reference 2.2.8, No. 01-18) which is used in conjunction with the aforementioned 1.5 m standoff to maintain the continuity with the current emplacement drift lineal dimensioning carried throughout this calculation and the ULC.

3.2.2 Operational Standoff and Footprint Restriction

Assumption: The operational standoff and footprint restriction for the reconstituted Panel 1 in the ULCLA will be 16.5 m (54 ft). This is the sum of minimum standoff from each end of the emplacement drift described in Assumption 3.2.1. In the ULC the "operational standoff" has the same meaning as "minimum standoff" and the "footprint restriction" refers to emplacement drift excavation outside the repository boundary (Reference 2.2.4, Attachment I). This assumption is used in Sections 4.3.1 and 7.1, and Attachment IV.

Rationale: An operational standoff and footprint restriction of 16.5 m (54 ft) for the reconstituted Panel 1 in the ULCLA is appropriate since the reconstituted Panel 1 remains in the same area between ULC Panel 1 and Panel 2 (Reference 2.2.4, Section 8.4).

3.2.3 Track Turnouts

Assumption: A No.11 track turnout is used in conjunction with 305 m (1000 ft) radius curves and a No. 6 track turnout is used in the turnout drift. This assumption is used in Section 6.2.2 and Attachment I.

Rationale: The AREMA No. 11, track turnout radius of 927 ft - 3¼ inches, identified in Section 6.1.3, is appropriate to use since it is close to the minimum radius of 305 m (1000 ft) used for ramps and mains in the ULC (Reference 2.2.4, Section 6.4). The Bechtel Infrastructure Corporation (BINFRA) *Yucca Mountain MGR Subsurface Transporter System Review* (Reference 2.2.2, Section 4.3) recommended a No. 6 track turnout for the turnout drift since a No. 6 track turnout can accommodate the weight of a transporter and has the flexibility to be used with various different turnout radii. However, the TEV is noted to have an 11 foot gage (Reference 2.2.7, Section 9.9.2.2.4), but for the purposes of demonstrating turnout rail geometry the AREMA turnouts are appropriate since the TEV rail would be similar.

3.2.4 Track Turnout Positioning

Assumption: The No. 6 track turnout is north of the No. 11 track turnout and the heels of their respective frogs are adjoined. This assumption is used in Section 6.2.2 and Attachment I.

Rationale: Turnout drift #3 in Panel 1 is located immediately north of the North Ramp curve point of tangency (Reference 2.2.4, Figure 6). As a result, the No. 11 track turnout at the bottom of the North Ramp Curve and the No. 6 track turnout for turnout drift #3 are in close proximity to each other. In order to maintain a separation and prevent an overlap of the No. 11 and No. 6 track turnouts, the heels of their respective frogs are adjoined.

3.2.5 Turnout Position Relative to the Access Main

Assumption: The turnout excavation is projected at the same elevation as the access main. This assumption is used in Attachment I.

Rationale: The turnout excavation is in agreement with any design modification that might be proposed for the North Ramp curve and the north extension of the access main. This assumption is based on engineering judgment in order to facilitate the illustration of cross-sectional views. Attaching the turnout view to the access main view allows any elevation change in the design solution to be automatically incorporated into the turnout/access main interface.

3.2.6 Road Base in the Access Main

Assumption: The road base for the north extension of the access main is three feet thick. This assumption is used for illustrative purposes in the cross-sectional views in Attachments I and II.

Rationale: A finished depth of three feet for the concrete invert is appropriate for this calculation since it is within an acceptable margin for the expected depth of the concrete invert that will support TEV usage during emplacement. A different value would not change the relative vertical cross-sectional configuration at the bottom of the North Ramp and a north extension of the access main.

3.2.7 North Extension of the Access Main Offset

Assumption: The north extension of the access main offset is 80 ft to the west. This assumption is used in Section 6.3.2 and Attachment II.

Rationale: An 80-foot offset to the west is appropriate since it exceeds the three diameter minimum spacing required for non-emplacement drifts (Section 4.3.1) and provides margin for the TEV to correct its alignment after exiting a curve before entry into an adjoining curve. Moving to the west is appropriate since a westward movement distances the north extension of the access main from the North Ramp.

4. METHODOLOGY

4.1 QUALITY ASSURANCE

This calculation was prepared in accordance with EG-PRO-3DP-G04B-00037, *Calculations and Analyses* (Reference 2.1.1). The Subsurface Facility is classified as a Safety Category item (important to safety and important to waste isolation) in the *Basis of Design* (Reference 2.2.7). Therefore, the approved version is designated as QA: QA.

4.2 USE OF SOFTWARE

The inputs for software usage are given in Section 2 and the outputs from the software are given in Sections 6 and 7.

Note: In compliance with EG-PRO-3DP-G04B-00037 (Reference 2.1.1, Section 3.6.2), Attachment VI, WPEC in the horizontal plane are not required to be re-verified since the WPEC in the horizontal plane do not change from the initial issue of the ULCLA with the inclusion of the current turnout design.

4.2.1 General Software

This calculation uses Microsoft® Office Excel 2003 in the Microsoft Windows XP Professional Version 2002 Service Pack 2 operating environment on a Dell Optiplex GX620 computer for computation. Also, Microsoft® Excel 97 SR-2 in the Microsoft Windows 2000 5.00.2195 Service Pack 4 operating environment on a Dell WORKSTATION PWS340 computer is used for computation in Attachment VI.

In this calculation Microsoft® Excel is commercially available software used to develop spreadsheets. As such, the useage is Level 2 and the software does not need to be qualified per IT-PRO-0011, *Software Management*, Attachment 12 (Reference 2.1.2).

Excel is used in Attachment V, Table V-1 through Table V-5, to round values to the nearest whole number using the conversion factor given in Section 0 and to add up columns of numbers throughout this document. Additionally, in Attachment VI, Excel is used to perform computations using trigonometry. The Excel computations in Attachment VI are used to verify the MicroStation (Section 4.2.2) output and examples of those computations are included. The Excel computations can be confirmed using hand calculations and by visual inspection.

4.2.2 Other Software

This calculation uses MicroStation Version 07.01.04.16 Windows x86, in the Microsoft Windows 2000 5.00.2195 Service Pack 4 operating environment on a Dell WORKSTATION PWS340 to generate coordinates, graphical representations, and figures in this calculation. MicroStation is Level 2 software used in accordance with IT PRO 0011 *Software Management* (Reference 2.1.2).

The input to MicroStation is the VULCAN output file *Subsurfaceladesign_m.dxf* (Reference 2.2.4, Attachment V) and the outputs are the figures throughout the document, the table values throughout the document, and the waste package endpoint coordinates in Section 7.6. The figures in this document are verified by visual inspection.

The MicroStation output was verified by an alternate calculation in Attachment VI in compliance with EG-PRO-3DP-G04B-00037, *Calculations and Analyses* (Reference 2.1.1, Section 3.4.1).

4.3 DESIGN METHODOLOGY

Conventional, industry accepted, underground excavation design was used to generate the ULCLA in concurrence with the design parameters that were used to develop the ULC (Reference 2.2.4, Section 7). The ULC was developed with the qualified VULCAN V4.0NT software in the three-dimensional geologic model Vulcan Geologic Framework Model 3.1 (Reference 2.2.4, Section 4.2). However, plan and section views in the ULCLA that integrate design enhancements favorable to construction and redefine the waste package endpoint coordinates were developed in MicroStation (Section 4.2.2) from the VULCAN output file *Subsurfaceladesign_m.dxf* (Reference 2.2.4, Attachment V). Therefore the MicroStation output was verified in Attachment VI in accordance with *Calculations and Analyses*, EG-PRO-3DP-G04B-00037 (Reference 2.1.1, Section 3.4.1).

The redefined underground layout configuration and waste package endpoint coordinates remain within the design boundaries established in the ULC by VULCAN therefore do not adversely affect or rearrange waste emplacement. As such, this calculation does not redefine and does not re-establish the fundamental requirements pertaining to geologic setting, emplacement drift orientation, waste inventory, water table standoff, perched water standoff, fault standoff, standoff from certain geologic units, the Repository Host Horizon, and overburden cover.

Note: The ULC turnout is depicted in Figures 1, 2, and 3 in Section 6.2, and Figure 4 in Section 6.3, and Figure 5 in Section 6.4, and the corresponding support documentation in Attachment I, II, and III, since the topic of discussion in the document at that point pertains the ULC repository design preceding the introduction of the current turnout design in Section 6.5.

4.3.1 Design Parameters

This calculation accepts the design principles applied to the development of the ULC (Reference 2.2.4, Section 7.2) that include the capability to operate in the higher-temperature mode, a modular design, placing surface openings outside the probable maximum flood area, preventing surface water ingress, having the subsurface water drainage directed away from the emplacement area, providing for post-closure water drainage, and recognizing a waste package standoff from quaternary faults with potential for significant displacement.

Table 1 provides a comparative list of the design parameters, such as requirements from *Basis of Design for the TAD Canister-Based Repository Design Concept* (Reference 2.2.7), criteria from *Project Design Criteria Document* (Reference 2.2.10), and derived requirements from *Postclosure Modeling and Analyses Design Parameters* (Reference 2.2.8) with the assumptions that were used in the development of the ULC and carried forward into the ULCLA. The table lists the individual design parameter, the source location for the design parameter, and the comparable ULC section, if available, or another design document that addresses the design parameter.

Table 1. Design Parameters

Design Parameter	Source	ULC Section [1]
The vertical separation between crossing drifts shall be a minimum of 10 m (33 ft) from the crown of the lower opening to the invert of the upper opening.	Reference 2.2.10, Section 4.2.13.8.1	6.1
The minimum spacing (centerline-to-centerline) for nonemplacement drifts, running parallel, shall be three diameters, based upon the diameter of the larger drift.	Reference 2.2.10, Section 4.2.13.8.2	6.1
The access mains and ramps shall be a nominal 7.62 m (25 ft diameter) in diameter.	Reference 2.2.10, Section 4.13.8.3	8.3, 8.4, 8.6
The excavated diameter of openings that are used to dispose of waste packages shall be a nominal of 5.5 m (18 ft).	Reference 2.2.10, Section 4.2.13.8.4	8.4
Portal and shaft/raise collar openings shall be protected from the probable maximum flood by making the surface gradient at the portal openings and shaft collars shall be down gradient and away from the openings.	Reference 2.2.10, Section 4.2.13.8.5	7.2.3, 7.2.4
The emplacement drifts shall be oriented at least 30 degrees from the dominant joint set per TBV-361 *Resolution Analysis: Emplacement Drift Orientation*. (The emplacement drifts are presently located along an azimuth of 252 degrees or alternately an azimuth of 72 degrees).	Reference 2.2.10, Section 4.2.13.8.6	5.1.4
The Subsurface Facility shall be designed to accept 70,000 MTHM of SNF/HLW for disposal.	Reference 2.2.7, Section 8.2.1.1	5.3.1.2
The emplacement drift spacing (center-to-center) shall be a nominal 81 m (266 ft).	Reference 2.2.7, Section 8.2.1.8	Not addressed in ULC
Performance confirmation requirements shall be identified with the issuance of the Performance Confirmation Plan.	Reference 2.2.7, Section 8.2.1.14	5.3.1.4
Derived Requirement		
The emplacement drifts shall be located a minimum of 120 m above the water table (worst-case postulated water level, ~850 m).	Reference 2.2.8 No. 01-04	7.1.1
The emplacement drifts shall be located a minimum of 60 m from a Quaternary fault with potential for significant displacement.	Reference 2.2.8 No. 01-05	7.1.3
The overburden thickness from the emplacement area to the	Reference 2.2.8	7.1.8

topographic surface shall be a minimum of 200 m.	No. 01-06	
The emplacement drifts shall be located a minimum of 30 m from the top of the Tptpv2 (Topopah Spring Tuff Crystal-poor Vitric Zone) because perched water may occur at the base of the Tpt (Topopah Spring Tuff).	Reference 2.2.8 No. 01-07	7.1.2
The emplacement drifts will be nominally parallel and the design azimuth shall be within a range of 70° to 80°.	Reference 2.2.8 No. 01-08	5.1.4
The repository ramps, access mains, exhaust mains, and emplacement drifts shall be constructed by tunnel boring machines (TBM).	Reference 2.2.8 No. 01-09	Not addressed in ULC
The emplacement drifts shall be circular in cross section with a diameter nominally 5.5 m (-0/+10%).	Reference 2.2.8 No. 01-10	8.4
The grade of the emplacement drift shall be nominally horizontal so that overall water drainage is directly into the rock to prevent water accumulation.	Reference 2.2.8 No. 01-11	7.2.6, Attachment III
The repository non-emplacement opening shall provide a repository grade so overall water drainage and accumulation is away from emplacement areas.	Reference 2.2.8 No. 01-12	7.2.5
The subsurface facility shall be designed to locate the emplacement drifts 81 m (+/- 5%) apart to prevent thermal interaction between adjacent drifts and to allow drainage of thermally mobilized water within the rock pillars to percolate past the drifts.	Reference 2.2.8 No. 01-13	Not addressed in ULC
As boundary conditions for the thermohydrologic model in the postclosure, the emplacement drifts shall include at least a 60 m long area at one end of the drift and a 15 m long area at the other end without emplaced waste packages.	Reference 2.2.8 No. 01-18	Not Applicable (N/A)
The portal and shaft collar locations shall be situated such that they can be protected from water inflow as a result of the probable maximum flood.	Reference 2.2.8 No. 01-19	7.2.3, 7.2.4
Assumption and Design Controls		
Waste Package Position	3.2.1	6.3
Standoff and Footprint	3.2.2	8.4
Turnout Parameters [3]	6.5	6.2, 6.4 [2]
Ventilation [3]	6.1.8	8.6

Note 1: Reference 2.2.4
2: Superseded by the *Turnout Design and Configuration* (Reference 2.2.9)
3. A design control feature in this document per CR-10113

4.3.2 Conversion Factor and Dimensioning Nomenclature

Project Design Criteria Document (Reference 2.2.10, Section 1.7) notes that the units of measure for design, fabrication, construction, component testing, and operation of procured items for the repository are to be English units and units of measure that are currently stated as metric units may remain as such and converted to English units, as necessary. Therefore, in this document measurement of rock, geologic models, and other non-procurement entities are expressed in metric units and the English units are shown in parentheses, as necessary.

The conversion factor that is used to convert metric units to the English equivalent is:

foot, U.S. survey 0.3048006 meter (Reference 2.2.11, Table A-1, p. 23).

This conversion factor is used to remain consistent with the ULC where the primary unit of measure is metric (Reference 2.2.4, Section 3). In the main body of the document, metric units are shown first, followed by an English equivalent in brackets, e.g., the minimum vertical separation between two crossing drifts is 10 m (33 ft) (Reference 2.2.4, Section 6.1).

5. LIST OF ATTACHMENTS

		Number of Pages
Attachment I	ULC North Ramp and Access Main Intersection	8
Attachment II	Design Impediment Mitigation for ULCLA	4
Attachment III	Panel 1 Optimization for ULCLA	3
Attachment IV	Available Emplacement Drift Length in the ULCLA	6
Attachment V	ULCLA Excavation Dimensions Worksheet	10
Attachment VI	Verification of Waste Package Endpoint Coordinates by an Alternative Method	20
Attachment VII	Electronic Microstation Files (Includes One CD)	2

6. BODY OF CALCULATION

6.1 DESIGN CONTROLS

6.1.1 Operational Standoff and Footprint Restriction

The operational standoff and footprint restriction remains the same as that stated in the *Underground Layout Configuration* (Reference 2.2.4, Attachment I) unless noted otherwise.

6.1.2 Access Main Azimuth and Gradient

The Main Drift azimuth is 183° and the grade is +1.35% to the south (Reference 2.2.4, Figure 3).

6.1.3 Railroad Frog

The American Railway Engineering and Maintenance of Way Association (AREMA) *2006 Portfolio of Trackwork Plans, Plan No. 910-02* specifies that the lead curve for Frog No. 11 is 927 ft - 3¼ inches (Reference 2.2.1).

6.1.4 Total Available Length of Emplacement Drift

The length of emplacement drift and the total available length of emplacement drift in the *Underground Layout Configuration* are 57403.2 m (188330.3 ft) and 63944.432 m (209791.0 ft), respectively (Reference 2.2.4, Tables IV-1 and IV-3). These two lengths will be compared to the equivalent lengths generated in a reconfigured underground layout design to confirm that the repository capacity is not compromised.

6.1.5 Bounding Endpoint Coordinates

The waste package endpoint coordinates are provided in *Underground Layout Configuration*, Table III-1 (Reference 2.2.4).

6.1.6 Available Length of Emplacement Drift

The Available Emplacement Drift Length values are provided in *Underground Layout Configuratio*n, Attachment I (Reference 2.2.4).

6.1.7 Observation Drift

The Observation Drift and the Test Alcove will be located in Panel 1. The excavation will start from the Thermal Testing Facility Alcove and run beneath, and parallel to, and 20 m (66 ft) north of Emplacement Drift 3, as described in *Performance Confirmation Facilities* (Reference 2.2.3, Section 6.1).

6.1.8 Emplacement Drift Ventilation

The *D&E/PA/C IED Emplacement Drift Configuration and Environment* (Reference 2.2.5, General Information and Table 1) indicates that waste placed in 800 m long emplacement drifts that have a nominal ventilation airflow rate of 15 m^3/s supports LA design.

6.2 CURRENT UNDERGROUND LAYOUT CONFIGURATION (ULC)

The current ULC is shown in Figure 1 (Reference 2.2.4, Figures 5 and 10). The design for the ULC incorporates the existing facilities that include the Exploratory Studies Facility (ESF) and the Enhanced Characterization of the Repository Block (ECRB) (Reference 2.2.4, Section 5.1.2).

6.2.1 Exploratory Studies Facility Design Azimuth and Gradient

The North Ramp descends at approximately -2.15% on an azimuth of approximately 298.97° (Reference 2.2.4, Figure 3). At STA 21+86.960 the North Ramp begins a 305 m radius curve. The curve segment redirects the North Ramp into the access main such that at STA 28+04.323 the azimuth has changed to 183° and the gradient has become +1.35%. The access main continues on the 183° azimuth at +1.35% until STA 56+54.323, at which point the design gradient becomes approximately +2.62%. At STA 59+35.467, the access main begins turning east in a 305 m radius curve into the South Ramp. The curve segment redirects the tunnel such that at STA 64+25.206, the azimuth is 91°. The design gradient remains at approximately +2.62%.

The future north extension to the access main is on a 3° azimuth and a -1.35% gradient (Reference 2.2.4, Section 5.1.2.1 and Figure 3). The excavation will start from the tangent point of the North Ramp curve and the access main at approximately STA 28+04.323.

6.2.2 Track Turnouts in the Access Main and Turnout

In this calculation the track turnout for curves that are 305 m (1000 ft) radius is a No. 11 track turnout (Assumption 3.2.3) and the track turnout for the turnout is a No. 6 turnout (Assumption 3.2.3). At the confluence of the North Ramp, the future north extension of the access main and the turnout, the No. 6 track turnout is located north of the No. 11 track turnout and the heels of the respective frogs are adjoined (Assumption 3.2.4) as shown in Figure 2.

6.2.3 Overview of Access Main Construction Impediment

The existing North Ramp curves into the access main at a 2.15% gradient, transitions through a vertical curve to rise at +1.35% towards the south defining the repository slope (Reference 2.2.4, Figure 3). As a result, the future north extension to the access main, at 1.35%, begins to undercut the North Ramp at the intersection of the North Ramp curve and the future north extension of the access main. Refer to Attachment I for the complete set of figures and the detailed discussion.

As demonstrated in Attachment I, the invert of the future north extension of the access main is progressively lower than the invert of the North Ramp curve and is an obstacle to the railroad design and installation. The elevation differential implies that the track on the North Ramp curve would be elevated above the track in the future north extension of the access main.

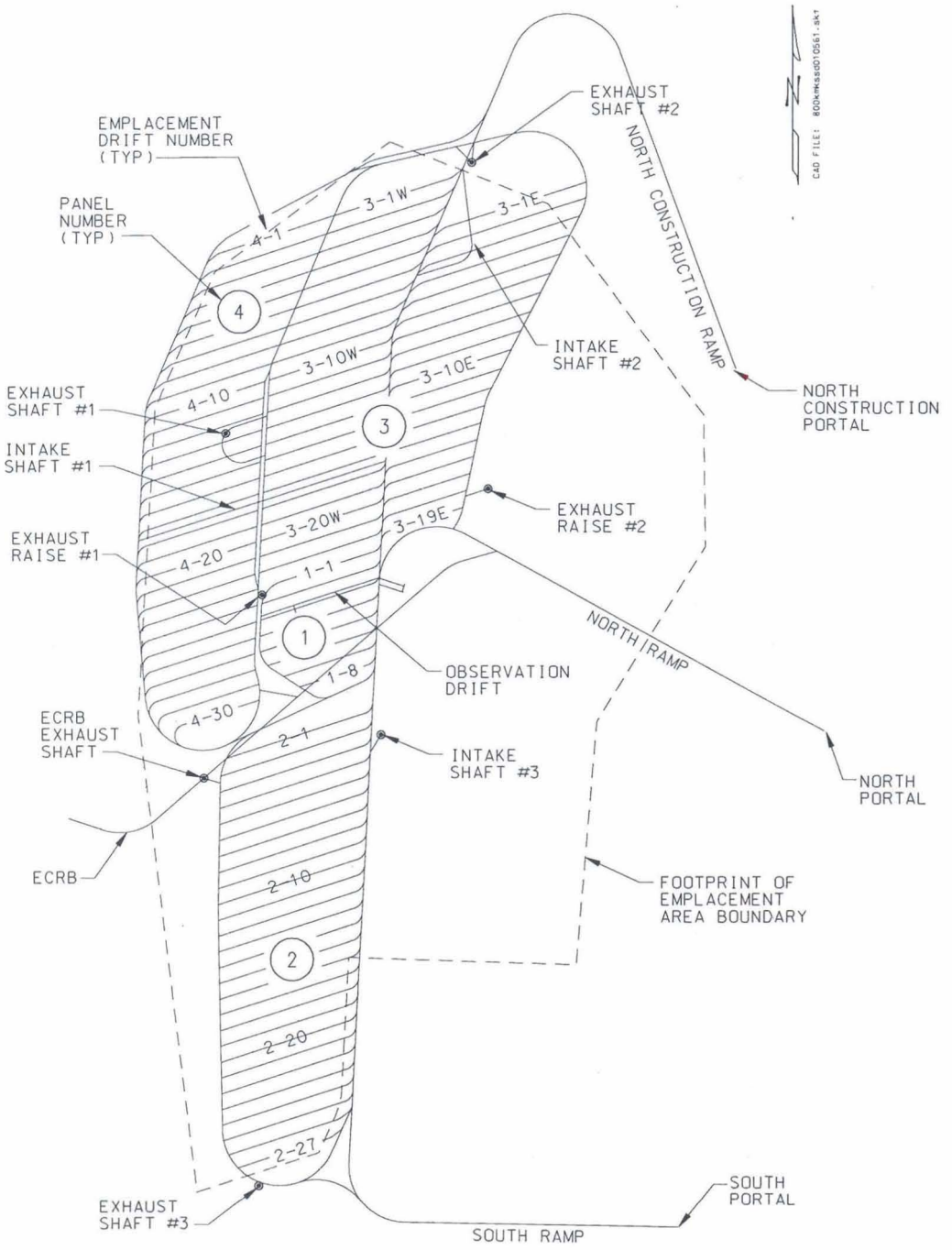

Reference 2.2.4, Figures 5 and 10

Figure 1. Underground Layout Configuration

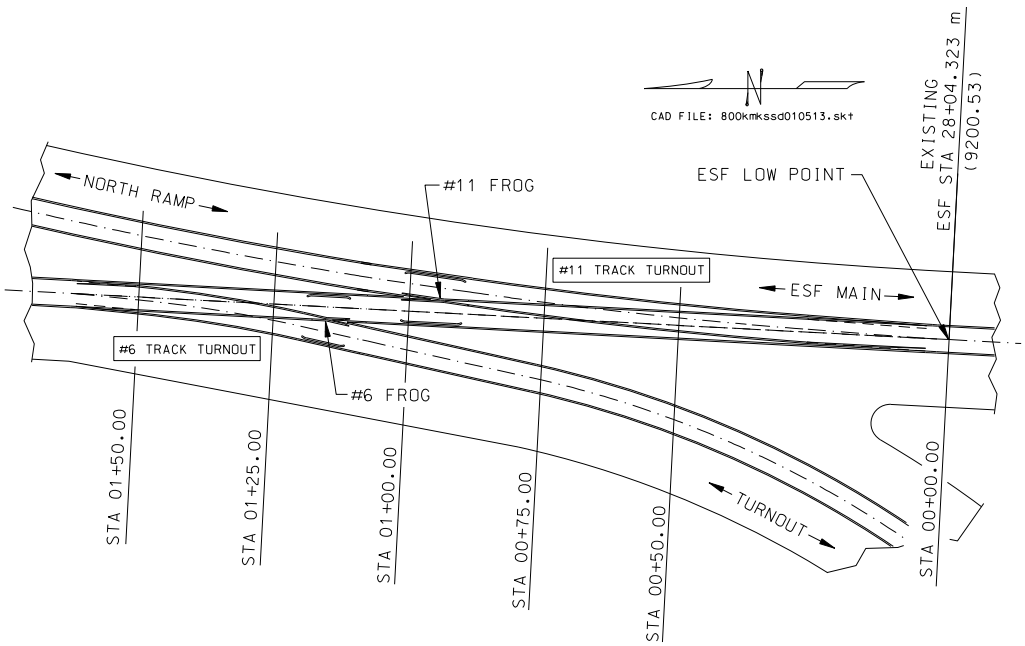

Figure 2. North Ramp and Access Main Intersection

Referring to Figure 2, at STA 01+00.00 (from Attachment I, Figure 1-5) it shows the North Ramp curve track crossing over the north extension of the access main track through the #11 frog. The frog is the common component to both tracks. The section view through the frog shown in Figure 3 clearly demonstrates the inability of the divergent excavation geometry to provide a suitable foundation for a railroad.

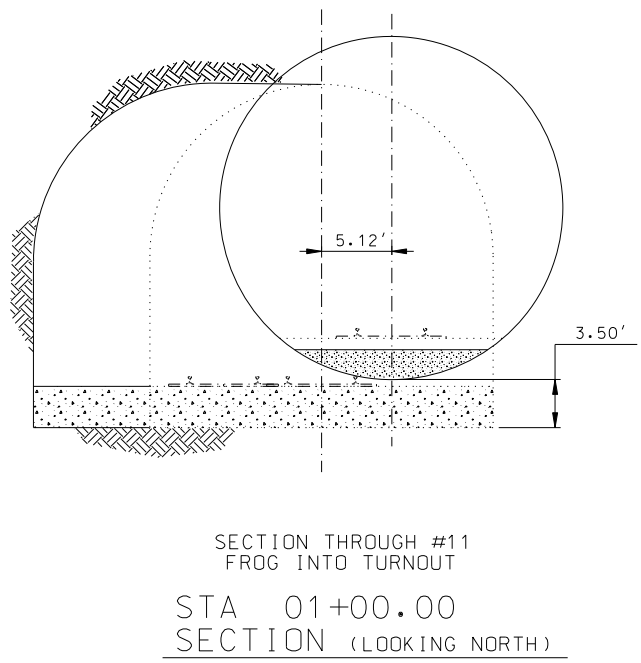

Figure 3. Section View Through #11 Frog

For example, the elevation of the west rail of the north extension of the access main is at least 1.07 m (3.5 ft) lower (Attachment I, Table I-1) than the elevation of the east rail of the North Ramp curve. Also, since the frog is an integral part of both tracks, it is not practical to share the frog. For example, at the frog, the wheel on one side of any rolling stock would travel over the frog while the wheel on the opposite side of the rolling stock straddles the outside rail of the north extension of the access main when moving north or the inside rail North Ramp curve when moving south.

Advancing north to STA 01+25.00 (Attachment I, Figure 1-6), the elevation difference between the two excavations has increased to about 1.34 m (4.38 ft). Also, the North Ramp curve has moved almost 2.4 m (8 ft) east, relative to the north extension of the access main. Continuation of the divergent excavations exacerbates conditions to integrate the tracks since the road base for the north extension of the access main undercuts the North Ramp curve invert. The extent of the impediment is delineated in Attachment I and a design solution that mitigates the interference is developed in Attachment II.

6.3 ACCESS MAIN DESIGN IMPEDIMENT RESOLUTION

One design alternative is modifying the existing design to obviate the elevation difference between the two competing excavations. Another design alternative is a separate departure for the north extension of the access main that will be compatible with the existing design parameters. Attachment II gives the detailed discussion for the two proposed design alternatives.

6.3.1 Modified Gradient Alternative

- Option 1: Maintain Ramp Gradient

This alternative proposes to match the grade of the north extension of the access main with the North Ramp gradient of +2.15% (Section 6.2.1). The congruent gradient would be carried through the No. 11 and No. 6 turnout arrangement, shown in Attachment I, Figure I-1. This maintains both tracks at the same elevation and precludes uneven rail placement. There are several drawbacks to this approach including: the No. 6 turnout departure is on a grade of 2.15%, the proposed design inserts a barrier into the repository drainage plane, and the proposed design could compromise the approach from access main into the Emplacement Drift by reducing the available elevation difference for turnout drainage. A complete discussion is provided in Attachment II. Also, the gradient to return the access main back to the repository plane is about 5% and this exceeds the transporter emplacement vehicle design constraint of 2.5% (Reference 2.2.7, Section 9.9.2.2.4).

- Option 2: Maintain Access Main Gradient

This option proposes to carry the access main gradient of 1.35% through the No. 11 and No. 6 turnout arrangements to STA 02+0.00, shown in Attachment Figure I-1. This approach entails the removal of the existing concrete invert and undercutting the access main excavation (since the North Ramp is rising at +2.15%) such that at STA 02+0.00 the existing North Ramp is 7-feet above the newly excavated access main invert. From STA 02+0.00, the North Ramp at +2.15% gradient would be undercut at a maximum gradient of 2.5% (Reference 2.2.7, Section 9.9.2.2.4)

until the two slopes converge. This is calculated to be a distance of approximately 2000 ft. The drawback to this approach is the extensive removal of existing concrete invert and equally extensive undercutting of the invert on both the access main and the North Ramp. Also, the concrete invert would have to be reestablished over the total affected length. Additionally, the intersection of the access main and the North Ramp would be 32-feet in height. A complete discussion is provided in Attachment II.

6.3.2 Bypass Alternative

The bypass alternative offsets the future north extension of the access main from the North Ramp while maintaining the access main slope of 1.35% to the north. The excavation geometry for the bypass alternative is shown in Figure 4. A complete discussion is provided in Attachment II.

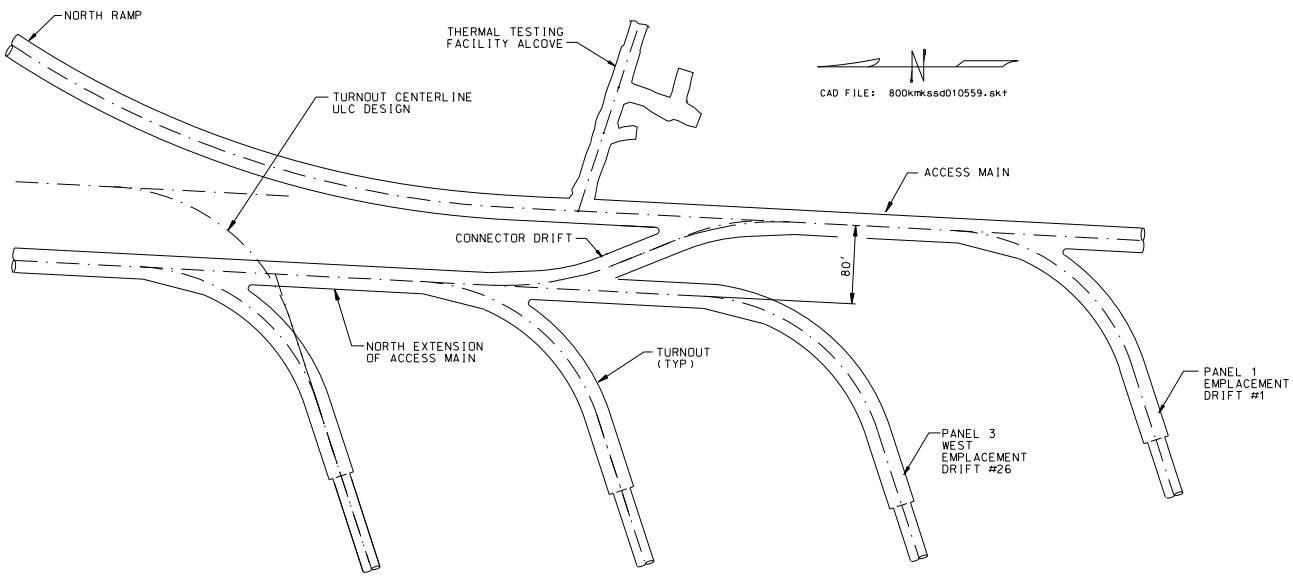

Figure 4. Bypass Alternative Excavation

A connector drift that shifts the north extension of the access main 80-feet to the west from the existing access main is incorporated into the design (Assumption 3.2.7). A No. 6 track turnout is utilized in the crossover to maintain continuity with the existing design (Section 6.2.2). The 80-foot offset to the west is a function of a No. 6 track turnout leading into and out of the crossover drift straight section, and the minimum required spacing between nonemplacement drifts (Section 4.3.1).

The lineal extent of the crossover is bounded by the selected track turnout, a straight segment which is closely related to the overall length of the TEV (Assumption 3.2.7), and the alignment with the north extension of the access main.

The placement of the crossover in the access main takes into consideration the end of the North Ramp and the excavation low point in conjunction with the footprint of the crossover and the supportable roof span in proximity to Thermal Testing Facility Alcove.

6.3.3 Selected Resolution

Three options that can resolve the construction concern that is described in Section 6.2.3 are discussed in Sections 6.3.1 and 6.3.2. The modified gradient, Option 1: Maintain Ramp Gradient, is excluded since it would be an obstacle in the repository drainage plane. Option 2: Maintain Access Main Gradient, is excluded as a viable option since it may have a detrimental effect on the schedule due to the large amount of invert removal, invert excavation, and invert reinstallation and the resulting large intersection may present challenging ground support issues. Therefore, the Bypass Alternative is selected as the most favorable design approach to mitigate the construction concern described in Section 6.2.3 since it satisfies the design requirements and is relatively simple to construct.

6.4 EMPLACEMENT PANEL 1 OPTIMIZATION

The design optimization of Panel 1, shown in Figure 5, is a continuation of the North Ramp curve reconciliation selected in Section 6.3.3. The design optimization considers the available emplacement area and repositioning of Panel 1 in conjunction with Panel 3E and 3W and the impact to the subsurface layout as a whole. The fundamental changes to the ULC Panel 1 in the design optimization of Panel 1 for the ULCLA are:

- Incorporation of the Connecter Drift.
- Panel 1, with Exhaust Raise #1, moved four-emplacement drift positions south.

  (ULC emplacement drifts 1-5, 1-6, 1-7, and 1-8 are re-numbered in the ULCLA as 1-1, 1-2, 1-3, and 1-4, respectively. And, ULC emplacement drifts 1-1, 1-2, 1-3, and 1-4 are transferred into Panel 3 West and re-numbered in the ULCLA as 3-23W, 3-24W, 3-25W, and 3-26W, respectively.)
- Adding two parallel emplacement drifts, at an 81 m center-to-center spacing and on an azimuth of 252 ° (Section 4.3.1), into the formerly unoccupied area between Panel 1 and Panel 2.
- Making Panel 1 exhaust main parallel with the access main and lengthening the emplacement drifts accordingly.
- Replacing the Vent Access to ECRB ramp (Reference 2.2.4, Table 6) with a raise of equal ventilation capacity (Section 6.6.3) since extending the emplacement drifts precludes a ramp from the ECRB to the Panel 3 Exhaust Main. This does not preclude reinstituting a ramp at an alternate location if it is determined to be advantageous for construction.

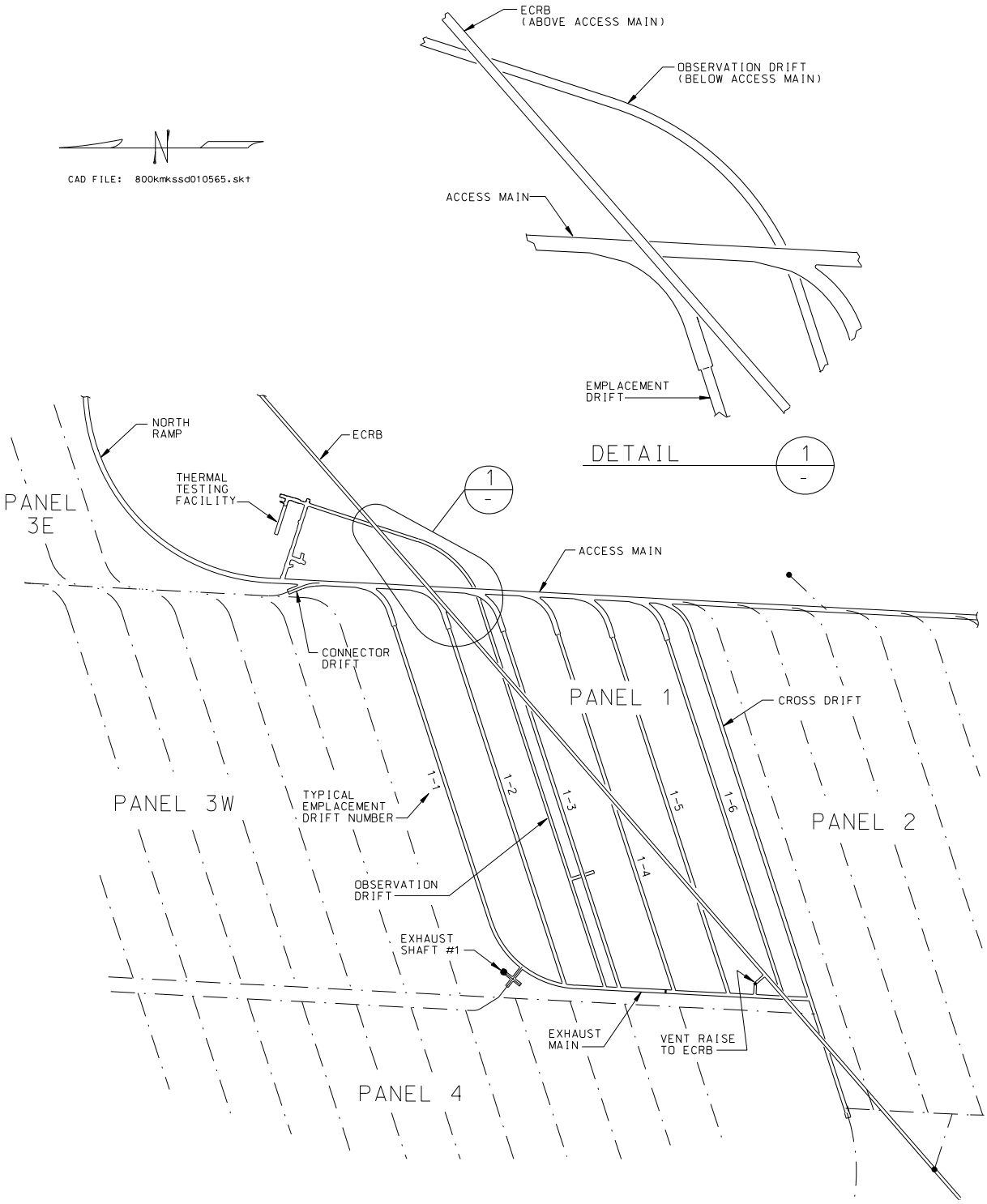

Figure 5. Emplacement Panel Configuration

NOTE: Exhaust Raise #1 will be renamed Exhaust Shaft #1 to agree with ULCLA nomenclature in Table 8.

6.5 TURNOUT DESIGN

6.5.1 Typical Turnout Configuration

The typical turnout configuration is shown in Figure 6 (Reference 2.2.9, Figure 1). The turnout design segments, identified by an uppercase letter, are listed in Table 2 with the corresponding lineal dimension (Reference 2.2.9, Table 5).

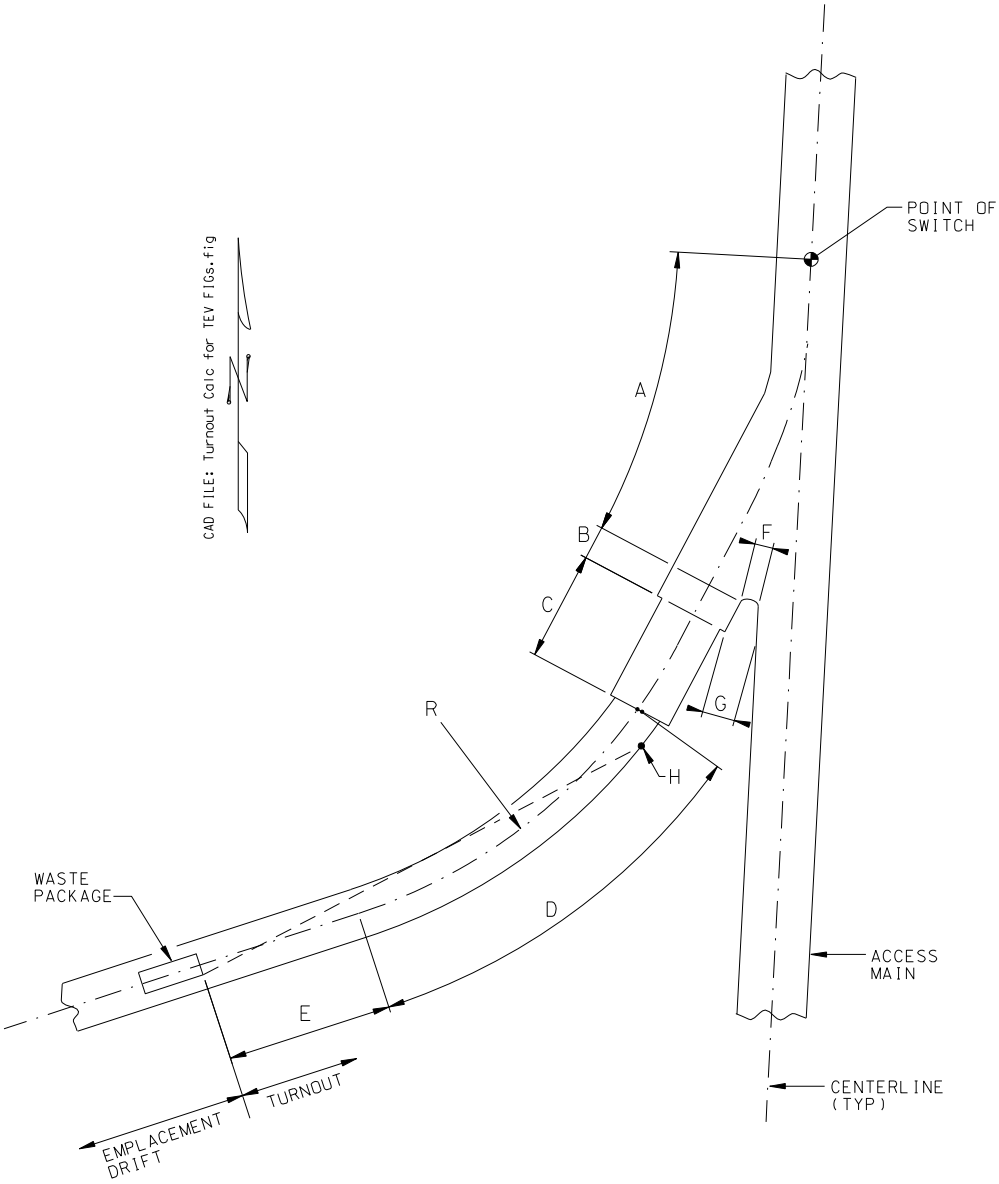

(Reference 2.2.9, Figure 1)

Figure 6. Typical Turnout – Plan View

Table 2. Turnout Excavation Dimensions (Typical)

Identifier	Description	Feet/Inches	Meters
A	Rail Turnout Segment	124' – 1¾"	37.840
B	Turnout Bulkhead Segment	12' – 0"	3.658
C	Launch Chamber	40' – 0"	12.000
D	Turnout Curve	126' – 6"	38.557
E	TEV Alignment Segment	60' – 0"	18.288
F	Turnout Pillar	6' – 6"	2.000
G	Launch Chamber Minimum Pillar Width	10' – 0"	3.048
H	Radiation Sightline Intercept (minimum)	10' – 0"	3.000
R	Centerline Radius	200' – 0"	60.960

Reference 2.2.9, Table 5

The height of the turnout excavation through segment "A", "B" and "C" is 6.25 m (20.5 ft) (Reference 2.2.9, Section 6.2). Segment "A" starts from the access main and increases in width to include the 2 m (6.5 ft) wide turnout pillar and the 8.5 m (27.9 ft) wide turnout bulkhead segment which result in a maximum dimension of 10.5 m (34.4 ft) wide (Reference 2.2.9, Section 6.2). Segment "B", the turnout bulkhead segment, is 8.5 m (27.9 ft) wide and segment "C" is 7 m (23 ft) wide (Reference 2.2.9, Section 6.2). Segment "D" through "E" is a 5.5 m (18 ft) tunnel bore.

The typical turnout is measured along the turnout centerline from the PI *turnout departure* to the waste package endpoint coordinate as shown in the *Turnout Design and Configuration* (Reference 2.2.9, Section 6.3.4, Figures 3 and 4). Therefore, from STA 0+23.628 to STA 0+49.408 is 25.780 m, and STA 0+49.408 to STA 61.433 is 12.025 m, and STA 61+4.33 to STA 1+18.288 is 56.855 m. Summing the distance 25.780, 12.025, and 56.855 equals 94.660 m for the total design length of the typical turnout.

The waste package standoff of 1.5 m (Assumption 3.2.1) is subtracted from the 94.660 m design length of the turnout since the 1.5 m is already included in the emplacement drift length. Therefore, the effective length of the turnout is 93.160 m which is rounded to 93 m (305 ft). Refer to Attachment V for the rounded turnout lengths as they are applied in each emplacement drift panel.

6.5.2 Emplacement Drift Elevation Change Based on Turnout Configuration

Turnout Design and Configuration (Reference 2.2.9) developed a turnout excavation design that integrated the civil-structural-architectural (CSA) design for the TEV railroad and mechanical excavation to the extent practical with a reduced potential to radiation exposure. A typical turnout, represented by west-facing turnout 1-4 (Reference 2.2.9, Section 6.3) located in the ESF, was used to illustrate the design. The ESF gradient is +1.35 % on an azimuth of 183 ° (see Section 6.2.1), hence the design gradient selected for the turnout was also +1.35 %.

Both west-facing and the east-facing turnouts where considered in determining the location of the emplacement plane (Reference 2.2.9, Section 6.4). As a result, emplacement drifts originating from west-facing turnouts are lowered 1.345 m from the currently assigned elevations and emplacement drifts originating from east-facing turnouts are raised 0.183 m. The elevation difference is because turnouts that are west-facing approach the emplacement plane from a relatively lower elevation than a corresponding east-facing turnout (Reference 2.2.9, Section 7.2). Effectively, the emplacement drifts in Panel 1, Panel 2, and Panel 3W are lowered 1.345 m and the emplacement drifts in Panel 3E and Panel 4 are raised 0.183 m.

As noted, turnout 1-4 originates from the ESF which has a gradient of +1.35 % that directly influences the turnout design. Therefore a reconciliation of the ULCLA gradients throughout the repository access mains and exhaust mains remains to be conducted for those areas that might have a different starting gradient. A reconciliation of the repository gradients would require an iterative process that would compare the emplacement plane horizons and the access mains/exhaust mains gradients, with respect to the turnout, in order to determine the optimal emplacement plane location that facilitates drainage. It is beyond the scope of this calculation to reconcile the repository gradients. However, a future version can perform a reconciliation of the repository gradients.

6.6 EMPLACEMENT PANEL COMPILATION

The ULC shown in Figure 1 has changed and the modifications that have been made are described for each of the repository panels in the following sections. The panels are combined to construct the general arrangement centerline figure of the ULCLA.

Note: The values listed in Sections 6.6.1 through 6.3.3 have been generated using MicroStation (refer to Section 4.2.2) unless otherwise stated. The primary unit of measure is meters and the values have been converted to English units using the conversion factor given in Section 0. Also, all the lengths have been rounded to a whole number to remain consistent with ULC (Reference 2.2.4) and the arithmetic is given in Attachment V.

6.6.1 Panel 1

The subsurface openings that constitute Panel 1, including all the associated non-emplacement excavation, are shown in Figure 7. Each excavation entity has been assigned a number that corresponds to the heading description in Table 3.

- Panel 1 has six emplacement drifts, each of which are accessed by a turnout. Emplacement Drift #1 is unique to the subsurface repository since it merges into the Panel 1 Exhaust Main.

- Panel 1 Exhaust Main is the only exhaust main in the subsurface repository that is 5.5 m diameter (18 ft diameter).

- Panel 1 has an Observation Drift (Section 6.1.7) beneath the emplacement horizon. The Observation Drift starts from Thermal Testing Facility Alcove and crosses beneath the access main turning onto the same azimuth as the emplacement drift. The Observation Drift will be parallel and 20 m (66 ft) north of Emplacement Drift #3 and rises to intersect Panel 1 Exhaust Main.

- Panel 1 area has a Connector Drift. The Connector Drift is the north extension of the access main to the future Panel 3.

- Panel 1 ventilation flows down the North Ramp and upon completion of construction activity, exhausts through Exhaust Raise #1. During construction, Panel 1 receives fresh air from the Vent Raise to the ECRB, which in turn receives fresh air from a ventilation shaft.

- Panel 1 has a Cross Drift to the future Panel 4 that runs parallel to the emplacement drifts and is positioned at the mid-pillar between Panel 1 and Panel 2.

NOTE: Exhaust Raise #1 will be renamed Exhaust Shaft #1 to agree with ULCLA nomenclature as noted in Table 8. However, to maintain continuity for simple comparison between the ULC and the ULCLA nomenclature, the existing ULC nomenclature is used in Table 3.

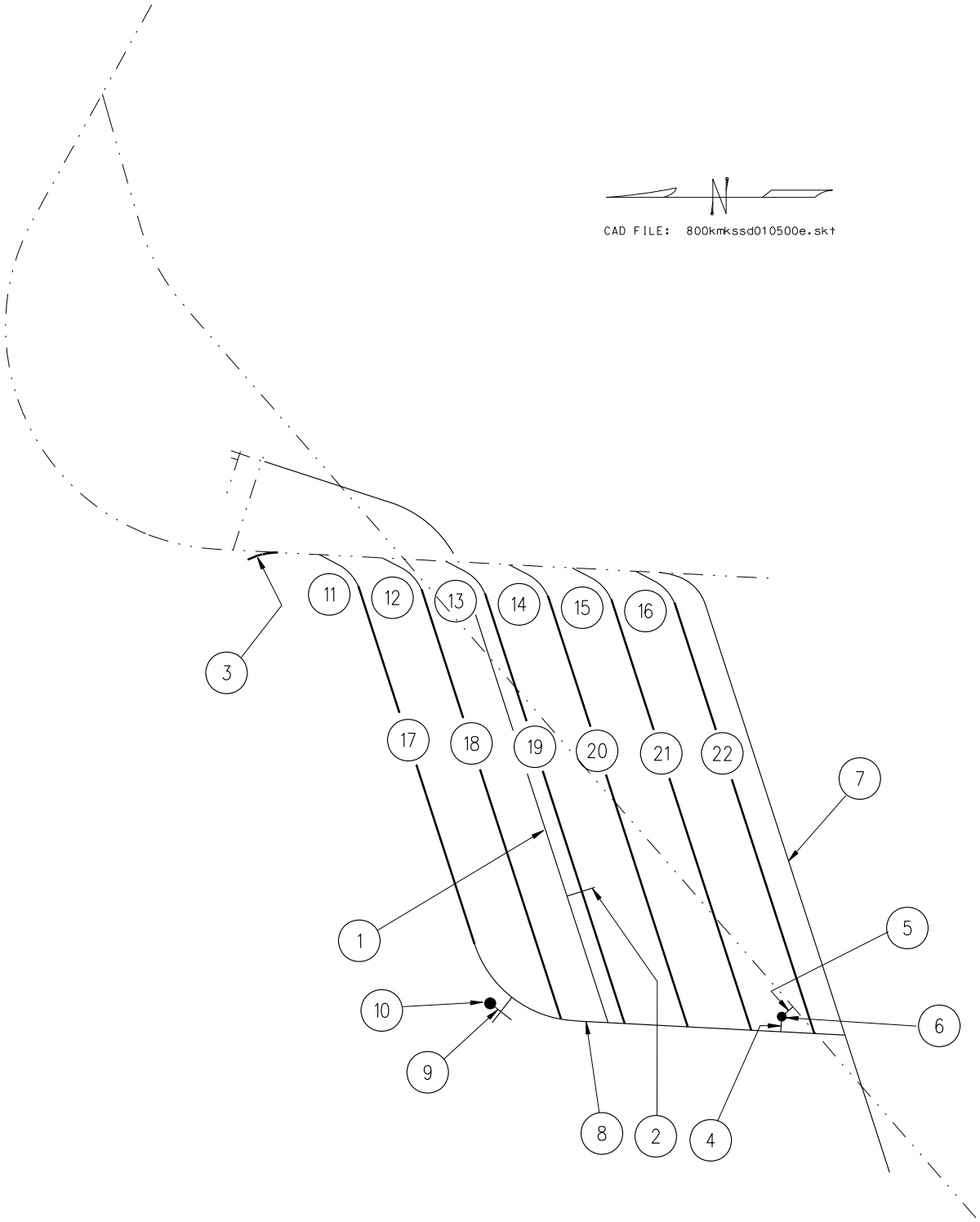

NOTE: For each numbered excavation refer to the corresponding number in Table 3 for the description.

Figure 7. Panel 1

Table 3. Panel 1

No.	Non-Emplacement Development	Size		Plan Length	
		Meters	Feet	Meters	Feet
1	Observation Drift	5 x 5	16 x 16	971	3186
2[1]	Observation Drift Alcove	5 x 5	16 x 16	40	131
3	Connector Drift	7 x 7	23 x 23	58	189
4	Vent Raise to ECRB Access	3.7 x 3.7	12 x 12	23	75
5	Vent Raise Access at ECRB	3.7 x 3.7	12 x 12	23	75
6	Construction Vent Raise to ECRB	3.75 diameter	12 diameter	29	95
7	Cross Drift to Panel 4	5.5 diameter	18 diameter	900	2951
8	Exhaust Main	5.5 diameter	18 diameter	555	1820
9	Exhaust Raise # 1 Access	5 x 5	16 x 16	72	237
10 [3]	Exhaust Raise #1	5 diameter	16 diameter	356	1167
Turnout					
11	Turnout #1	Variable Size [2]		93	305
12	Turnout #2			93	305
13	Turnout #3			93	305
14	Turnout #4			93	305
15	Turnout #5			93	305
16	Turnout #6			93	305
			Total	558	1830
Emplacement Drift		**Size (diameter)**			
17	Drift #1	5.5	18	507	1664
18	Drift #2	5.5	18	596	1955
19	Drift #3	5.5	18	597	1959
20	Drift #4	5.5	18	597	1959
21	Drift #5	5.5	18	597	1959
22	Drift #6	5.5	18	597	1959
			Total	3491	11455

NOTES: 1. Consistent with ULC (Reference 2.2.4)

2. Refer to Section 6.5.1 for turnout excavation size allocation and go to Table V-1 for rounded values.

3. Exhaust Raise #1 will be renamed Exhaust Shaft #1 to agree with ULCLA nomenclature in Table 8. However, to maintain continuity for simple comparison between the ULC and the ULCLA nomenclature, the existing ULC nomenclature is used in Table 3.

6.6.2 Panel 2

The subsurface openings that constitute Panel 2, including all the associated non-emplacement excavation, are shown in Figure 8. Each excavation entity has been assigned a number that corresponds to the heading description given in Table 4.

- Panel 2 has twenty-seven emplacement drifts all of which are accessed by turnouts.
- Panel 2 turnouts start from the access main except Turnouts #26 and #27 which originate from the access main Offset Drift.
- Panel 2 Exhaust Main is 7.62 m diameter (25 ft diameter) and starts at the South Ramp and turns north to intersect the Cross Drift located between Panel 2 and Panel 1.
- Intake Shaft #3 supplies fresh air to the north end of Panel 2 and the South Ramp provides fresh air for the south end of Panel 2. Return air from Panel 2 north end and south end exhausts through the ECRB Exhaust Shaft and Exhaust Shaft #3, respectively. Exhaust Shaft #3 will also be used to exhaust return air during construction.
- Panel 2 is adjacent to the Cross Drift to Panel 4 that is positioned at the mid-pillar between Panel 1 and Panel 2.

NOTE: Intake Shaft #3 will be renamed Intake Shaft #2 and Exhaust Shaft #3 will be renamed Exhaust Shaft #2 to agree with ULCLA nomenclature as noted in Table 8. However, to maintain continuity for simple comparison between the ULC and the ULCLA nomenclature, the existing ULC nomenclature is used in Table 4.

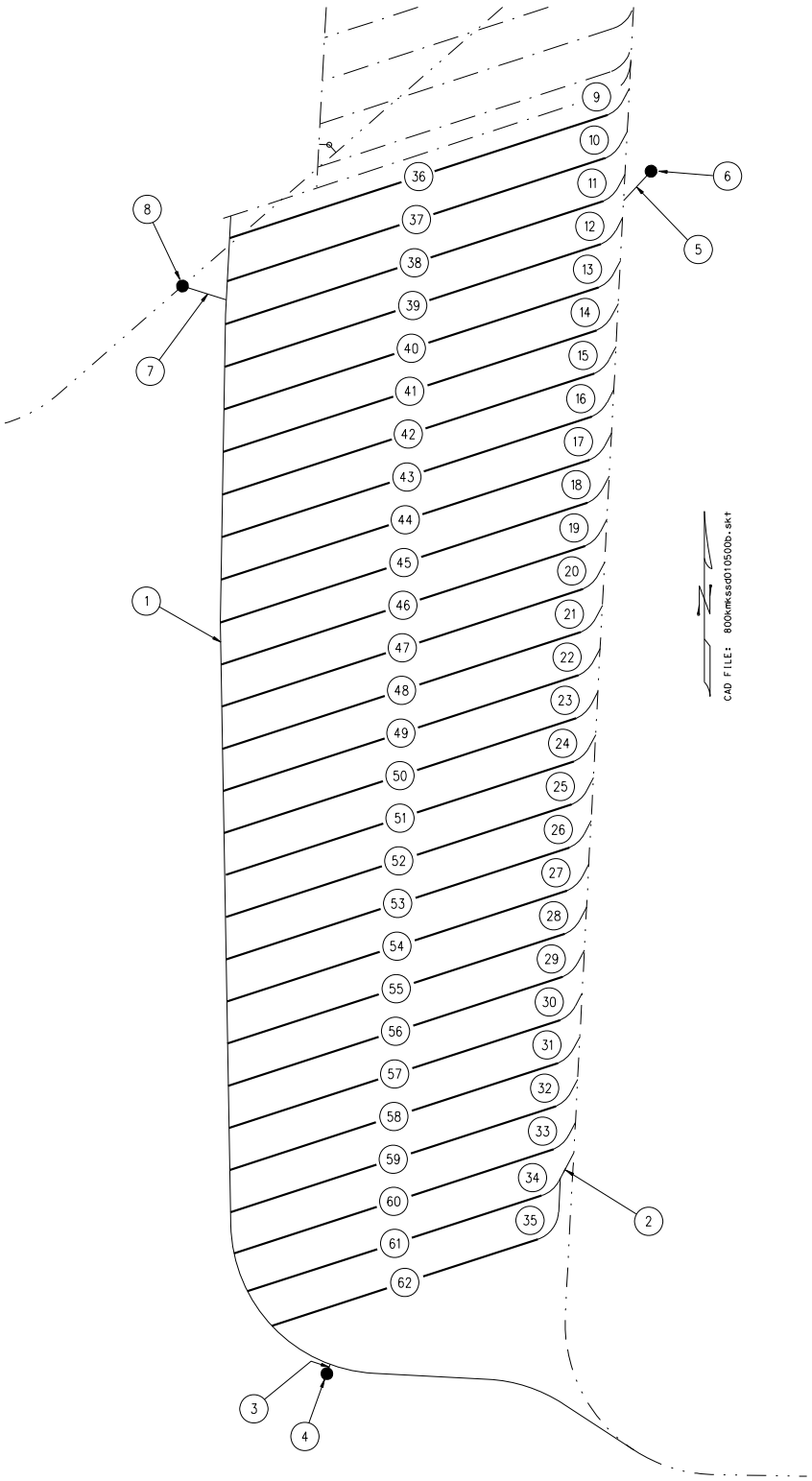

NOTE: For each numbered excavation refer to the corresponding number in Table 4 for the description.

Figure 8. Panel 2

Table 4. Panel 2

No.	Non-Emplacement Development	Size		Plan Length [3]	
		Meters	Feet	Meters	Feet
1	Exhaust Main	7.62 diameter	25 diameter	3047	9998
2	Access Main Offset Drift	7 x 7	23 x 23	143	469
3 [1]	Exhaust Shaft #3 Access Drift	8 x 8.5	26 x 28	20	66
4 [1]	Exhaust Shaft #3 [2]	8 diameter	26 diameter	292	958
5 [1]	Intake Shaft #3 Access Drift	8 x 8.5	26 x 28	109	358
6 [1]	Intake Shaft #3 [2]	8 diameter	26 diameter	248	814
7 [1]	ECRB Exhaust Shaft Access	8 x 8.5	26 x 28	91	299
8 [1]	ECRB Exhaust Shaft	8 diameter	26 diameter	398	1306
Turnout					
9	Turnout #1	Variable Size [3]		93	305
10	Turnout #2			93	305
11	Turnout #3			93	305
12	Turnout #4			93	305
13	Turnout #5			93	305
14	Turnout #6			93	305
15	Turnout #7			93	305
16	Turnout #8			93	305
17	Turnout #9			93	305
18	Turnout #10			93	305
19	Turnout #11			93	305
20	Turnout #12			93	305
21	Turnout #13			93	305
22	Turnout #14			93	305
23	Turnout #15			93	305
24	Turnout #16			93	305
25	Turnout #17			93	305
26	Turnout #18			93	305
27	Turnout #19			93	305
28	Turnout #20			93	305
29	Turnout #21			93	305
30	Turnout #22			93	305
31	Turnout #23			93	305
32	Turnout #24			93	305
33	Turnout #25			93	305
34	Turnout #26			102	336
35	Turnout #27			148	458
			Total	2575	8419

(continued)

Table 4. Panel 2 (Continuation)

No.	Emplacement Drift [1]	Size (diameter)		Plan Length [3]	
		Meters	Feet	Meters	Feet
36 [4]	Drift #1	5.5	18	779	2557
37	Drift #2	5.5	18	779	2557
38	Drift #3	5.5	18	779	2554
39	Drift #4	5.5	18	775	2544
40	Drift #5	5.5	18	772	2533
41	Drift #6	5.5	18	769	2523
42	Drift #7	5.5	18	766	2512
43	Drift #8	5.5	18	763	2502
44	Drift #9	5.5	18	759	2491
45	Drift #10	5.5	18	756	2481
46	Drift #11	5.5	18	750	2460
47	Drift #12	5.5	18	744	2439
48	Drift #13	5.5	18	737	2419
49	Drift #14	5.5	18	731	2398
50	Drift #15	5.5	18	725	2377
51	Drift #16	5.5	18	718	2356
52	Drift #17	5.5	18	712	2336
53	Drift #18	5.5	18	706	2315
54	Drift #19	5.5	18	699	2294
55	Drift #20	5.5	18	693	2273
56	Drift #21	5.5	18	687	2253
57	Drift #22	5.5	18	680	2232
58	Drift #23	5.5	18	674	2211
59	Drift #24	5.5	18	668	2190
60	Drift #25	5.5	18	655	2150
61 [4]	Drift #26	5.5	18	583	1914
62 [4]	Drift #27	5.5	18	485	1591
			Total	19344	63462

NOTES: 1. Consistent with ULC (Reference 2.2.4).

2. Intake Shaft #3 will be renamed Intake Shaft #2 and Exhaust Shaft #3 will be renamed Exhaust Shaft #2 to agree with ULCLA nomenclature in Table 8. However, to maintain continuity for simple comparison between the ULC and the ULCLA nomenclature, the existing ULC nomenclature is used in Table 4.

3. Refer to Section 6.5.1 for turnout excavation size allocation and go to Table V-2 for rounded values.

4. Generated by MicroStation

6.6.3 Panel 3

The subsurface openings that constitute Panel 3, including all the associated non-emplacement excavation, are shown in Figure 9. Panel 3 has an east component and a west component that have a common access main. Panel 3 shares ventilation shafts with Panel 4 as well. Each excavation entity has been assigned a number that corresponds to the heading description given in Table 5.

- Panel 3 East has nineteen emplacement drifts and Panel 3 West has twenty-six emplacement drifts that are accessed by a turnout.

- Panel 3 mains are 7.62 m diameter (25 ft diameter).

- Panel 3 development begins as the North Construction Ramp, advancing in a southerly direction, transitioning into Panel 3 access main. The access main changes azimuth towards the Panel 1 Connector Drift in the vicinity of Panel 3 West Turnout #10.

- Panel 3 Exhaust Main is accessed from the Panel 3 Exhaust Main Access and forms the perimeter of Panel 3.

- Fresh air sources for the south, central, and north sections of Panel 3 are the North Ramp, Intake Shaft #1, and Intake Shaft #2, respectively.

- Exhaust Shaft #1 and Exhaust Shaft #2 will service both east and west sides of the central and northern areas of Panel 3.

- Exhaust Raise #2 will service the south end of Panel 3 East. Exhaust Raise #1, located in Panel 1, will exhaust the south end of Panel 3 West supplemented by an exhaust Vent Raise to the ECRB (feature number 18 in Table 5).

  NOTE: The Vent Raise to the ECRB replaces the Vent Access to ECRB ramp (Reference 2.2.4, Table 6) discussed in Section 6.4. This does not preclude reinstituting a ramp at an alternate location if it is determined to be advantageous for construction.

- During development, Exhaust Shaft #2 will provide fresh air for construction via the Exhaust Shaft #2 Construction Access.

NOTE: To agree with ULCLA nomenclature in Table 8. Intake Shaft #1 will be renamed Intake Shaft #4 and Exhaust Shaft #1 will be renamed Exhaust Shaft #4 (both are located in Panel 4 and serves both Panel 3 and Panel 4), Intake Shaft #2 will be renamed Intake Shaft #3, Exhaust Raise #2 will be renamed Exhaust Shaft #3S and Exhaust Shaft #2 will be renamed Exhaust Shaft #3N. However, to maintain continuity for simple comparison between the ULC and the ULCLA nomenclature, the existing ULC nomenclature is used in Table 5.

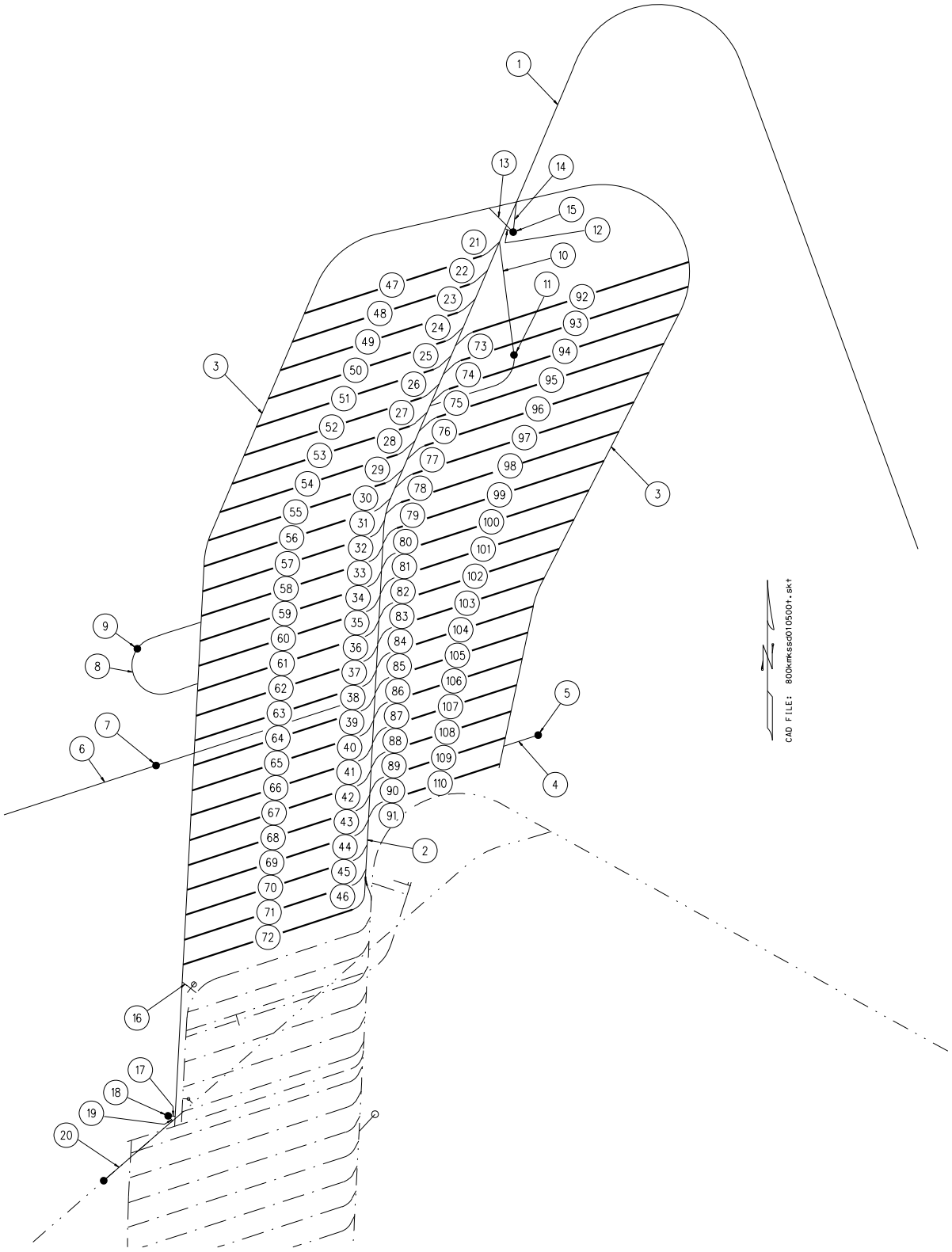

NOTE: For each numbered excavation refer to the corresponding number in Table 5 for the description.

Figure 9. Panel 3

Table 5. Panel 3

No.	Non-Emplacement Development	Size		Plan Length [3]	
		Meters	Feet	Meters	Feet
1[1]	North Construction Ramp	7.62 diameter	25 diameter	2884	9462
2	Access Main	7.62 diameter	25 diameter	2670	8759
3	Exhaust Main	7.62 diameter	25 diameter	6439	21127
4[1]	Exhaust Raise #2 Access Drift	5 x 5	16 x 16	127	417
5[1]	Exhaust Raise #2 [2]	5 diameter	16 diameter	279	915
6[1]	Intake Shaft #1 Access Drift	7.62 diameter	25 diameter	1384	4541
7[1]	Intake Shaft #1 [2]	8 diameter	26 diameter	378	1240
8[1]	Exhaust Shaft #1 Access Drift	8 x 8.5	26 x 28	598	1962
9[1]	Exhaust Shaft #1 [2]	8 diameter	26 diameter	405	1329
10[1]	Intake Shaft #2 Access Drift	8 x 8.5	26 x 28	770	2526
11[1]	Intake Shaft #2 [2]	8 diameter	26 diameter	350	1148
12[1]	Exhaust Shaft #2 Const. Access	5 x 5	16 x 16	31	102
13[1]	Exhaust Shaft #2 West Access	8 x 8.5	26 x 28	118	387
14[1]	Exhaust Shaft #2 East Access	8 x 8.5	26 x 28	106	348
15[1]	Exhaust Shaft #2 [2]	8 diameter	26 diameter	428	1404
16	Exhaust Raise #1 Access Drift	5 x 5	16 x 16	22	72
17	Access to ECRB Raise	7 x 7	23 x 23	30	99
18	Vent Raise to ECRB	8 diameter	26 diameter	29	95
19	ECRB Access to Raise	7 x 7	23 x 23	27	88
20	ECRB Widening	7 x 7	23 x 23	318	1042
WEST Turnout					
21	West Turnout #1	Variable Size [3]		118	387
22	West Turnout #2			118	387
23	West Turnout #3			118	387
24	West Turnout #4			118	387
25	West Turnout #5			118	387
26	West Turnout #6			118	387
27	West Turnout #7			118	387
28	West Turnout #8			118	387
29	West Turnout #9			114	374
30	West Turnout #10			92	304
31	West Turnout #11			93	305
32	West Turnout #12			93	305
33	West Turnout #13			93	305
34	West Turnout #14			93	305
35	West Turnout #15			93	305
36	West Turnout #16			93	305
37	West Turnout #17			93	305
38	West Turnout #18			93	305
39	West Turnout #19			93	305
40	West Turnout #20			93	305
41	West Turnout #21			93	305
42	West Turnout #22			93	305
43	West Turnout #23			93	305
44	West Turnout #24			93	305
45	West Turnout #25			93	305
46	West Turnout #26			93	305
			Total	2638	8654

(Continued)

Table 5. Panel 3 (continuation)

No.	WEST Emplacement Drift [4]	Size (diameter)		Plan Length [3]	
		Meters	Feet	Meters	Feet
47[1]	West Drift #1	5.5	18	617	2023
48[1]	West Drift #2	5.5	18	617	2023
49[1]	West Drift #3	5.5	18	617	2023
50[1]	West Drift #4	5.5	18	617	2023
51[1]	West Drift #5	5.5	18	617	2023
52[1]	West Drift #6	5.5	18	617	2023
53[1]	West Drift #7	5.5	18	617	2023
54[1]	West Drift #8	5.5	18	617	2023
55	West Drift #9	5.5	18	615	2018
56	West Drift #10	5.5	18	599	1965
57	West Drift #11	5.5	18	596	1954
58	West Drift #12	5.5	18	596	1954
59	West Drift #13	5.5	18	596	1954
60	West Drift #14	5.5	18	596	1954
61	West Drift #15	5.5	18	596	1954
62	West Drift #16	5.5	18	596	1954
63	West Drift #17	5.5	18	596	1954
64	West Drift #18	5.5	18	596	1954
65	West Drift #19	5.5	18	596	1954
66	West Drift #20	5.5	18	596	1954
67	West Drift #21	5.5	18	596	1954
68	West Drift #22	5.5	18	596	1954
69	West Drift #23	5.5	18	596	1954
70	West Drift #24	5.5	18	596	1954
71	West Drift #25	5.5	18	596	1954
72	West Drift #26	5.5	18	596	1954
Total				15686	51431

No.	EAST Turnout	Size		Plan Length [3]	
		Meters	Feet	Meters	Feet
73	East Turnout #1	Variable Size [3]		119	390
74	East Turnout #2			119	390
75	East Turnout #3			119	390
76	East Turnout #4			119	390
77	East Turnout #5			119	390
78	East Turnout #6			116	381
79	East Turnout #7			93	305
80	East Turnout #8			93	305
81	East Turnout #9			93	305
82	East Turnout #10			93	305
83	East Turnout #11			93	305
84	East Turnout #12			93	305
85	East Turnout #13			93	305
86	East Turnout #14			93	305
87	East Turnout #15			93	305
88	East Turnout #16			93	305
89	East Turnout #17			93	305
90	East Turnout #18			93	305
91	East Turnout #19			93	305
Total				1920	6296

(Continued)

Table 5. Panel 3 (Continuation)

No.	EAST Emplacement Drift [4]	Size (diameter)		Plan Length [3]	
		Meters	Feet	Meters	Feet
92[1]	East Drift #1	5.5	18	757	2484
93[1]	East Drift #2	5.5	18	799	2621
94[1]	East Drift #3	5.5	18	808	2651
95[1]	East Drift #4	5.5	18	794	2605
96[1]	East Drift #5	5.5	18	787	2582
97	East Drift #6	5.5	18	776	2547
98	East Drift #7	5.5	18	766	2512
99	East Drift #8	5.5	18	740	2429
100	East Drift #9	5.5	18	691	2266
101	East Drift #10	5.5	18	641	2102
102	East Drift #11	5.5	18	591	1938
103	East Drift #12	5.5	18	541	1774
104	East Drift #13	5.5	18	506	1659
105	East Drift #14	5.5	18	492	1614
106	East Drift #15	5.5	18	474	1556
107	East Drift #16	5.5	18	459	1505
108	East Drift #17	5.5	18	443	1453
109	East Drift #18	5.5	18	427	1402
110	East Drift #19	5.5	18	412	1350
Total				11904	39051

NOTES: 1. Consistent with ULC (Reference 2.2.4).
2. To agree with ULCLA nomenclature in Table 8: Intake Shaft #1 will be renamed Intake Shaft #4 and Exhaust Shaft #1 will be renamed Exhaust Shaft #4 (both are located in Panel 4 and serves both Panel 3 and Panel 4), Intake Shaft #2 will be renamed Intake Shaft #3, Exhaust Raise #2 will be renamed Exhaust Shaft #3S and Exhaust Shaft #2 will be renamed Exhaust Shaft #3N. However, to maintain continuity for simple comparison between the ULC and the ULCLA nomenclature, the existing ULC nomenclature is used in Table 5.
3. Refer to Section 6.5.1 for turnout excavation size allocation and go to Table V-3 for rounded values.
4. Generated by MicroStation

6.6.4 Panel 4

The subsurface openings that constitute Panel 4, including all the associated non-emplacement excavation, are shown in Figure 10. Panel 4 has a section of shared exhaust main with Panel 3 West. Each excavation entity has been assigned a number that corresponds to the heading description given in Table 6.

- Panel 4 has thirty emplacement drifts that are accessed by a turnout.
- Panel 4 access main is 7.62 m diameter (25 ft diameter) starting from the North Construction Ramp, moving in a westerly direction, bypassing the northern limit of Panel 3 West, and continuing to the western boundary of Panel 4.
- The western boundary of Panel 4 access main parallels Panel 3 access Main then turns eastward to intersect the Cross Drift located between Panel 2 and Panel 1.
- Panel 4 Exhaust Main is comprised of three segments. The northern segment is a shared exhaust main with Panel 3 West up to Emplacement Drift #9. A central portion from Emplacement Drift #10 to Emplacement Drift #26 parallels Panel 3 West Exhaust Main. The south section of the exhaust main services the remaining four emplacement drifts in Panel 4 and is an exhaust conduit for Panel 3 West exhaust.
- Panel 4 shares ventilation shafts with Panel 3. Fresh air for the south end of Panel 4 is supplied from Intake Shaft #1. Intake Shaft #2 services the north end of Panel 4.
- Exhaust Shaft #2 services the north end of Panel 4. Exhaust Shaft #1 will service the central area and the ECRB Exhaust Shaft will service the south end of Panel 4.

NOTE: In order to agree with ULCLA nomenclature as noted in Table 8, Intake Shaft #1 will be renamed Intake Shaft #4, Exhaust Shaft #1 will be renamed Exhaust Shaft #4. However, to maintain continuity for simple comparison between the ULC and the ULCLA nomenclature, the existing ULC nomenclature is used in Table 8.

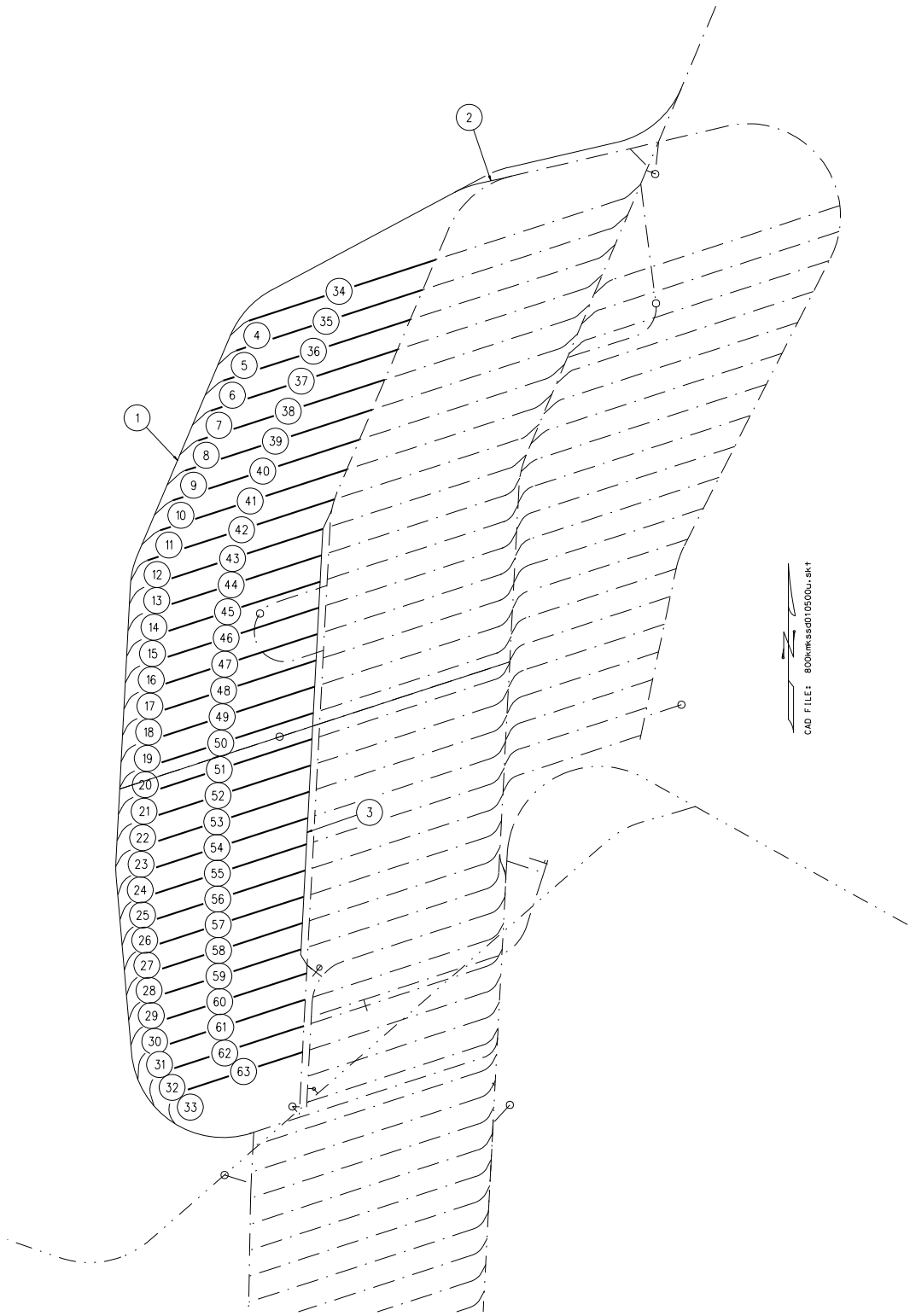

NOTE: For each numbered excavation refer to the corresponding number in Table 6 for the description.

Figure 10. Panel 4

Table 6. Panel 4

No.	Non-Emplacement Development	Size		Plan Length [2]	
		Meters	Feet	Meters	Feet
1	Intake Main	7.62 diameter	25 diameter	4835	15862
2[1]	Panel 3 Exhaust Main Access	7.62 diameter	25 diameter	200	656
3	Exhaust Main (Dual)	7.62 diameter	25 diameter	1516	4975
Turnout					
4	Turnout #1	Variable Size [2]		119	390
5	Turnout #2			119	390
6	Turnout #3			119	390
7	Turnout #4			119	390
8	Turnout #5			119	390
9	Turnout #6			119	390
10	Turnout #7			119	390
11	Turnout #8			119	390
12	Turnout #9			99	324
13	Turnout #10			93	305
14	Turnout #11			93	305
15	Turnout #12			93	305
16	Turnout #13			93	305
17	Turnout #14			93	305
18	Turnout #15			93	305
19	Turnout #16			93	305
20	Turnout #17			93	305
21	Turnout #18			93	305
22	Turnout #19			93	305
23	Turnout #20			97	318
24	Turnout #21			102	335
25	Turnout #22			102	335
26	Turnout #23			102	335
27	Turnout #24			102	335
28	Turnout #25			102	335
29	Turnout #26			102	335
30 [3]	Turnout #27			102	335
31 [3]	Turnout #28			124	407
32 [3]	Turnout #29			154	505
33 [3]	Turnout #30			193	633
			Total	3263	10702
No.	**Emplacement Drift [1]**	**Size (diameter)**			
34	Drift #1	5.5	18	617	2023
35	Drift #2	5.5	18	617	2023
36	Drift #3	5.5	18	617	2023
37	Drift #4	5.5	18	617	2023
38	Drift #5	5.5	18	617	2023
39	Drift #6	5.5	18	617	2023
40	Drift #7	5.5	18	617	2023
41	Drift #8	5.5	18	617	2023
42	Drift #9	5.5	18	634	2082
43	Drift #10	5.5	18	605	1986
44	Drift #11	5.5	18	605	1986
45	Drift #12	5.5	18	605	1986
46	Drift #13	5.5	18	605	1986
47	Drift #14	5.5	18	605	1986
48	Drift #15	5.5	18	605	1986
49	Drift #16	5.5	18	605	1986
50	Drift #17	5.5	18	605	1986
51	Drift #18	5.5	18	605	1986

No.	Emplacement Drift [1]	Size (diameter)			
52	Drift #19	5.5	18	605	1986
53	Drift #20	5.5	18	605	1985
54	Drift #21	5.5	18	594	1947
55 [3]	Drift #22	5.5	18	581	1907
56 [3]	Drift #23	5.5	18	569	1866
57 [3]	Drift #24	5.5	18	556	1825
58 [3]	Drift #25	5.5	18	544	1785
59 [3]	Drift #26	5.5	18	532	1744
60 [3]	Drift #27	5.5	18	544	1784
61 [3]	Drift #28	5.5	18	517	1697
62 [3]	Drift #29	5.5	18	462	1516
63 [3]	Drift #30	5.5	18	366	1201
			Total	17490	57383

NOTES: 1. Consistent with ULC (Reference 2.2.4).

2. Refer to Section 6.5.1 for turnout excavation size allocation and go to Table V-4 for rounded values.
3. Generated by MicroStation and adjusted for 1.5 m offset (see Section 6.5.1).

6.7 OBSERVATION DRIFT

The observation drift remains in the same relative spatial location with the emplacement drift and retains the same features as the ULC design (Reference 2.2.4, Section 8.5) noted in Section 6.1.7. However, the observation drift is reconstituted with the repositioned Panel 1 described in Section 6.6.1.

6.8 VENTILATION INTERFACE

The ventilation strategy for the ULCLA remains the same as in the ULC except as required to accommodate the Panel 1 reconfiguration shown in Section 6.4, Figure 5. The changes to the ventilation system are:

1. Exhaust Raise #1 has been relocated with the reconstituted Panel 1 described in Section 6.6.1. The shaft coordinates are given in Table 16.

2. The Vent Access to ECRB, which is a ramp, (Reference 2.2.4, Table 6 and Section 8.6, respectively) has been replaced by ventilation raise as described in Section 6.4. This does not preclude reinstituting a ramp at an alternate location if it is determined to be advantageous for construction.

3. The ECRB widening identified in Section 6.6.3, Table 5, occurs between the ventilation raise and the ECRB shaft.

7. RESULTS AND CONCLUSIONS

7.1 INCLUSION OF DESIGN PARAMETERS, INPUTS AND ASSUMPTIONS

Design parameters listed in Section 4.3.1, Table 1, design controls from Section 6.1 and stated assumptions in Section 3.2, are applied to reconfigure the ULC to incorporate a design solution to the construction interference between the North Ramp and the future north extension of the access main (refer to Sections 6.3 and 6.4). The design solution results in a direct change to Panel 1 that results in changes to Panels 2, 3 and 4 (refer to Section 6.6). Additionally, the turnout design developed in *Turnout Design and Configuration* (Reference 2.2.9) is incorporated into a reconfigured ULC as described in Section 6.5. The combined changes are expressed as the ULCLA.

The justification and the arguments for the design parameters, design controls and assumptions noted in Table 1 are not reiterated since the ULCLA remains within the design boundaries of the ULC and, as such, does not adversely influence or rearrange waste emplacement from the design principles and constraints established in the ULC. Table 7 lists the design parameters and provides evidence of inclusion into the ULCLA.

Table 7. Design Parameter Inclusion

Design Parameters [1]	Section	Example
The vertical separation between crossing drifts shall be a minimum of 10 m (33 ft) from the crown of the lower opening to the invert of the upper opening.	Section 6.4	Observation Drift consistent with the ULC (Reference 2.2.4)
The minimum spacing (centerline-to-centerline) for nonemplacement drifts, running parallel, shall be three diameters, based upon the diameter of the larger drift.	Section 6.3.2	Applied to connector drift design
The access mains and ramps shall be a nominal 7.62 m (25 ft diameter) in diameter.	Section 7.4	Used Throughout, consistent with the ULC (Reference 2.2.4)
The excavated diameter of openings that are used to dispose of waste packages shall be a nominal 5.5 m (18 ft).	Section 7.4	Used Throughout, consistent with the ULC (Reference 2.2.4)
Portal and shaft/raise collar openings shall be protected from the probable maximum flood by making the surface gradient at the portal openings and shaft collars shall be down gradient and away from the openings.	N/A	Consistent with the ULC (Reference 2.2.4)
The emplacement drifts shall be oriented at least 30 degrees from the dominant joint set per TBV-361 *Resolution Analysis: Emplacement Drift Orientation*. (The emplacement drifts are presently located along an azimuth of 252 degrees or alternately an azimuth of 72 degrees).	Section 6.6	Azimuth 252 degrees used throughout, consistent with the ULC (Reference 2.2.4)
The Subsurface Facility shall be designed to accept 70,000 MTHM of SNF/HLW for disposal.	Section 7.5.1	Consistent with the ULC (Reference 2.2.4)
The emplacement drift spacing (center-to-center) shall be a nominal 81 m (266 ft).	Section 6.4	Additional emplacement drifts in Panel 1
Performance confirmation requirements shall be identified with the issuance of the Performance Confirmation Plan.	Section 6.6.1	Consistent with the ULC (Reference 2.2.4)
Derived Requirement		
The emplacement drifts shall be located a minimum of 120 m above the water table (worst-case postulated water level, ~850 m).	Section 7.6 [(2)]	Consistent with the ULC (Reference 2.2.4)

The emplacement drifts shall be located a minimum of 60 m from a Quaternary fault with potential for significant displacement.	**(3)**	Consistent with the ULC (Reference 2.2.4)
The overburden thickness from the emplacement area to the topographic surface shall be a minimum of 200 m.	N/A	Consistent with the ULC (Reference 2.2.4)
The emplacement drifts shall be located a minimum of 30 m from the top of the Tptpv2 (Topopah Spring Tuff Crystal-poor Vitric Zone) because perched water may occur at the base of the Tpt (Topopah Spring Tuff).	N/A	Consistent with the ULC (Reference 2.2.4)
The emplacement drifts will be nominally parallel and the design azimuth shall be within a range of 70° to 80°.	Section 6.4	Additional emplacement drifts in Panel 1
The repository ramps, access mains, exhaust mains, and emplacement drifts shall be constructed by tunnel boring machines (TBM).	Section 7.4	Consistent with the ULC (Reference 2.2.4)
The grade of the emplacement drift shall be nominally horizontal so that overall water drainage is directly into the rock to prevent water accumulation.	Section 7.6	Consistent with the ULC (Reference 2.2.4)
The repository non-emplacement opening shall provide a repository grade so overall water drainage and accumulation is away from emplacement areas.	Section 6.5	*Turnout Design and Configuration* applied (Reference 2.2.9)
The subsurface facility shall be designed to locate the emplacement drifts 81 m (+/- 5%) apart to prevent thermal interaction between adjacent drifts and to allow drainage of thermally mobilized water within the rock pillars to percolate past the drifts.	Section 6.4	Consistent with the ULC (Reference 2.2.4)
As boundary conditions for the thermohydrologic model in the postclosure, the emplacement drifts shall include at least a 60 m long area at one end of the drift and a 15 m long area at the other end without emplaced waste packages.	Section 6.5, and Assumption 3.2.1	Turnout design and waste package standoff to exhaust main
The portal and shaft collar locations shall be situated such that they can be protected from water inflow as a result of the probable maximum flood.	N/A	Consistent with the ULC (Reference 2.2.4)

Assumption and Design Controls

Waste Package Position (see Assumption 3.2.1)	Attachment IV	Design standoff used throughout, consistent with the ULC (Reference 2.2.4)
Standoff and Footprint (see Assumption 3.2.2)	Attachment IV	Consistent with the ULC (Reference 2.2.4)
Turnout Parameters [4]	Section 6.5	Turnout design
Emplacement Drift Ventilation [4]	Section 7.5.2	Consistent with ventilation thermal goals

NOTES: 1. Section 4.3.1, Table 1

2. The emplacement drift that has the lowest elevation is emplacement drift 3-1W, at elevation 1037.477 m (refer to Section 7.6, Table 14), which is approximately 187 m above the worst-case postulated water level of ~850 m. This exceeds the minimum required distance of 120 m above the water table. Also, the lowest elevation in the repository occurs in a non-emplacement area at Exhaust Shaft 2 (Reference 2.2.4, Table 7) presently called Exhaust Shaft #3N (Section 7.2, Table 8) that bottoms out at elevation 1022.294 m. This is approximately 173 m above the worst-case postulated water level of ~850 m and exceeds the minimum required distance of 120 m above the water table.
3. As stated in ULC (Reference2.2.4, Section 7.1.3), "the only Type I fault identified in the immediate area of the repository is the Solitario Canyon fault" and a 60-meter standoff from the trace of any Type I fault is adequate and the ULCLA is consistent with the ULC in this regard.
4. A design control feature incorporating advances in the design and CR-10113 resolution.

7.2 SHAFT NOMENCLATURE

The shaft and raise nomenclature has been revised to reflect the emplacement panel in which the shaft or raise is excavated. Also, all the vertical development that emerges on surface is called a shaft. The shaft and raise nomenclature used in the ULC and the ULCLA counterpart are provided in Table 8.

Table 8. Shaft Nomenclature

Panel	Underground Layout Configuration[1]	Underground Layout Configuration for LA
1	Exhaust Raise #1	Exhaust Shaft #1
	ECRB Exhaust Shaft	ECRB Exhaust Shaft
	Construction Vent Raise to ECRB	Construction Vent Raise to ECRB
2	Intake Shaft #3	Intake Shaft #2
	Exhaust Shaft #3	Exhaust Shaft #2
3	Intake Shaft #2	Intake Shaft #3
	Exhaust Raise #2	Exhaust Shaft #3S
	Exhaust Shaft #2	Exhaust Shaft #3N
	N/A	Vent Raise to ECRB[2]
4	Intake Shaft #1	Intake Shaft #4
	Exhaust Shaft #1	Exhaust Shaft #4
	Vent Access to ECRB[2]	N/A

NOTES: 1. Source ULC (Reference 2.2.4, Figure 10).
2. The ULCLA has reconfigured an equivalent airway in Panel 3 to replace the Panel 4 Vent Access

7.3 UNDERGROUND LAYOUT CONFIGURATION FOR LA

The ULCLA shown in Figure 11 combines the individual figures for Panels 1, 2, 3, and 4 presented in Section 6.6. The shaft nomenclature described in Section 7.2 is applied. Figure 11 represents the repository configuration technically endorsed in the TMRB Decision Proposal 2006-010 (Reference 2.2.6).

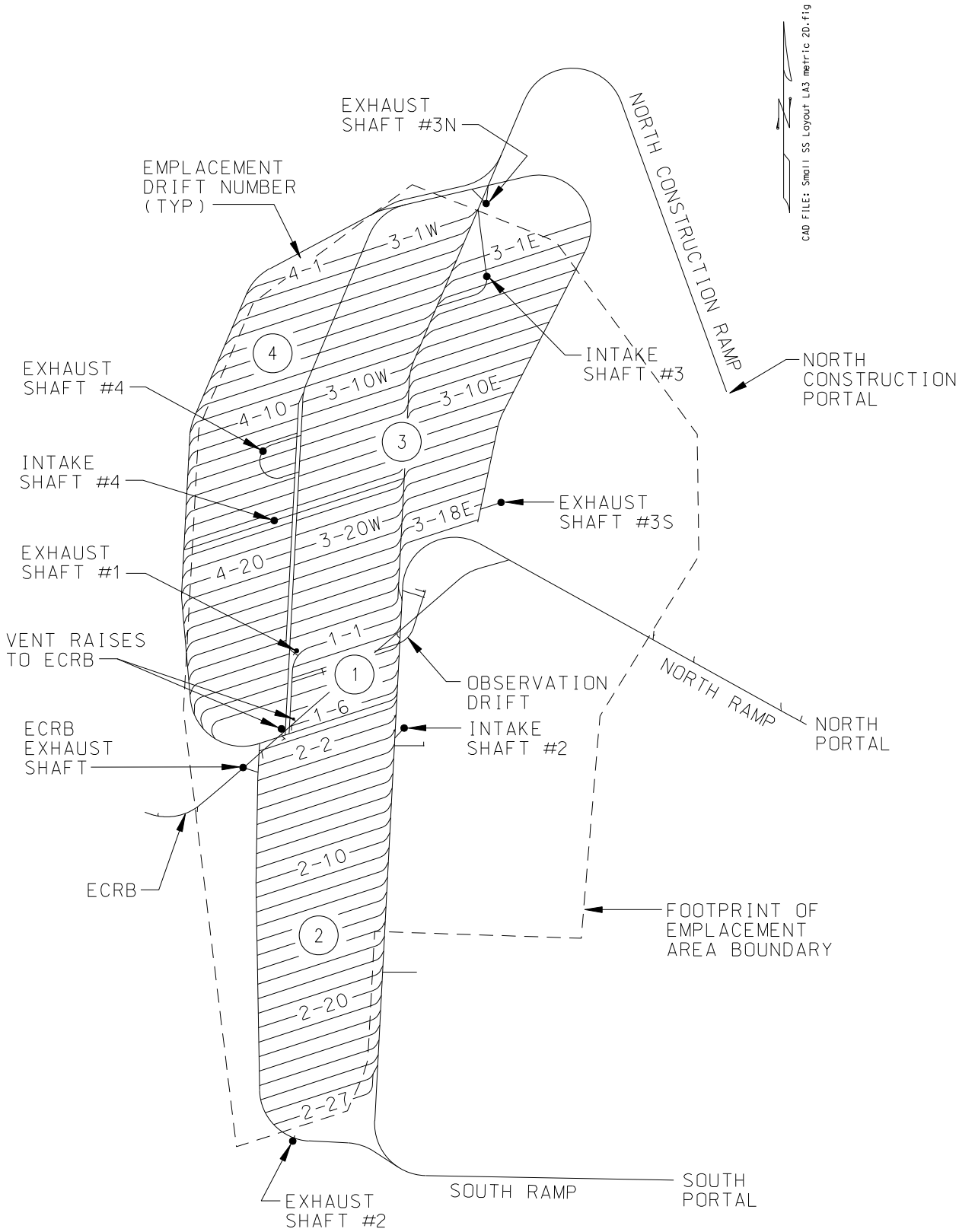

Figure 11. Underground Layout Configuration for LA

7.4 EXCAVATION SUMMARY

The individual excavation summary for Panels 1, 2, 3, and 4 are given in Sections 6.6.1, 6.6.2, 6.6.3, and 6.6.4, respectively. The summary of excavation lengths for the ULCLA is given in Table 9. Note that ULC projected 12 assembly/disassembly chambers for the large TBM (Reference 2.2.4, Table 8) are included.

Table 9. Overall Excavation Summary for the ULCLA

Heading	Size		Plan Length [1]	
	Meters	Feet	Meters	Feet
Emplacement Drifts	5.5 diameter	18 diameter	67915	222781
Turnouts [2]	Variable (refer to Section 6.5.1)		10954	35901
North Construction Ramp [3]	7.62 diameter	25 diameter	2884	9462
Access/Exhaust Main	7.62 diameter	25 diameter	16991	55746
Exhaust Main (Dual)	7.62 diameter	25 diameter	1516	4975
Exhaust Main (Panel 1)	5.5 diameter	18 diameter	555	1820
Access Main Offset Drift	7 x 7	23 x 23	143	469
Connector Drift (Panel 1)	7 x 7	23 x 23	58	189
Cross Drift to Panel 4	5.5 diameter	18 diameter	900	2951
Observation Drift (Panel 1)	5 x 5	16 x 16	1011	3317
Panel 3 Exhaust Main Access [3]	7 x 7	23 x 23	200	656
Exhaust Raise Access Drift	5 x 5	16 x 16	221	726
Vent Raise to ECRB Access	3.7 x 3.7	12 x 12	23	75
Vent Raise to ECRB (Panel 1)	3.75 diameter	12 diameter	29	95
Vent Raise Access at ECRB	3.7 x 3.7	12 x 12	23	75
Access to ECRB Raise	7 x 7	23 x 23	30	99
Vent Raise to ECRB (Panel 3)	8 diameter	26 diameter	29	95
ECRB Access to Raise	7 x 7	23 x 23	27	88
ECRB Widening	7 x 7	23 x 23	318	1042
Intake/Exhaust Shaft [3]	8 diameter	26 diameter	2499	8199
Exhaust Raise	5 diameter	16 diameter	635	2082
Intake Shaft #1 Access Drift [3]	7.62 diameter	25 diameter	1384	4541
Exhaust/Intake Shaft Access Drift [3]	8 x 8.5	26 x 28	1812	5946
Construction Shaft Access (Panel 3) [3]	5 x 5	16 x 16	31	102
Assembly/Disassembly Chambers [3]	11 x 11	36 x 36	240	787

NOTES: 1. Refer to Attachment V
2. Adjusted for 1.5 m offset (see Section 6.5.1)
3. Source: Reference 2.2.4, Table 8 (consistent with ULC)

7.5 AVAILABLE EMPLACEMENT LENGTH (METERS)

7.5.1 Available Emplacement Drift Length

The available length of emplacement drift for waste emplacement for each panel is given in Table 10. The total available length of emplacement drift for waste emplacement in the ULCLA repository is 65273 m. The ULC, total emplacement drift length and the available emplacement drift length are 57403.2 m and 63944.432 m, respectively (refer to Section 6.1.4). Therefore the regulatory requirement (refer to Section 4.3.1) to have the capacity to store 70,000 MTHM is satisfied. Note: Table 10 values have been generated using MicroStation (refer to Section 4.2.2).

Table 10. Emplacement Drift Available in the ULCLA (Meters)

Panel	Available Drift Length[1]	Cumulative Available Drift Length[1]
1	3392	3392
2	18876	22269
3 East	11040	33308
3 West	15246	48554
4	16719	65273

Note 1: Source is Attachment IV, values rounded to a whole number

7.5.2 Maximum Emplacement Drift Length

The 15 m^3/s ventilation rate for emplacement drifts limits the available emplacement length to 800 m for an emplacement drift (Section 6.1.8). By inspecting the Available Emplacement Drift Length tables, located in Attachment IV, it can be verified that no single emplacement drift exceeds 800 m in length. For example, the emplacement drifts 1-5 and 1-6 have been added to design and they do not exceed the 800 m limit dictated by the design ventilation. Therefore the ventilation guideline is satisfied.

7.6 WASTE PACKAGE ENDPOINT COORDINATES (METERS)

Tables 11 through 15 give the waste package endpoint coordinates in meters and correspond to the ULCLA that is shown in Figure 11. The elevation of each emplacement drift originating from a west-facing turnout is lowered by 1.345 m and emplacement drifts that originate from east-facing turnouts are raised 0.183 m (refer to Section 6.5.2). Since Emplacement Drifts 1-5 and 1-6 are additions to the ULC (refer to Section 6.4), they have been generated by MicroStation (refer to Section 4.2.2) and the corresponding emplacement drift elevations are calculated. Coordinate values remain the same as in the ULC (Reference 2.2.4) unless identified as generated by MicroStation (refer to Section 4.2.2).

The MicroStation output in this calculation is verified by an alternative method in compliance with the Calculations and Analyses, EG-PRO-3DP-G04B-00037 (Reference 2.1.1, Section 3.4.1) and the results are located in Attachment VI.

Table 11. Panel 1 Waste Package End Point Coordinates (Meters)

Emplacement Drift[1]	East Side		West Side		Elevation [2]
	Northing	Easting	Northing	Easting	
1-1	233886.070	171240.176	233734.401	170773.388	1067.931
1-2	233799.426	171235.636	233620.394	170684.634	1069.102
1-3	233712.783	171231.095	233533.381	170678.955	1070.273
1-4	233626.138	171226.554	233446.736	170674.414	1071.445
1-5	233539.494	171222.014	233360.092	170669.874	1072.616 [3]
1-6	233452.851	171217.473	233273.449	170665.333	1073.787 [3]

NOTES: 1. Refer to Section 6.4 for ULCLA Panel 1 numbering sequence.
2. Adjusted ULC elevations (Refer to 2.2.4) per Section 6.5.2.
3. Calculated

Table 12. Panel 2 Waste Package End Point Coordinates (Meters)

Emplacement Drift	East Side		West Side		Elevation [2]
	Northing	Easting	Northing	Easting	
2-1	233366.199	171212.931	233130.468[1]	170487.425[1]	1074.959
2-2	233279.555	171208.390	233043.824	170482.884	1076.131
2-3	233192.910	171203.849	232957.408	170479.049	1077.302
2-4	233106.266	171199.308	232871.754	170477.554	1078.473
2-5	233019.621	171194.767	232786.099	170476.058	1079.645
2-6	232932.977	171190.226	232700.444	170474.563	1080.816
2-7	232846.332	171185.686	232614.789	170473.068	1081.987
2-8	232759.688	171181.145	232529.134	170471.573	1083.159
2-9	232673.043	171176.604	232443.479	170470.078	1084.33
2-10	232586.399	171172.063	232357.824	170468.583	1085.502
2-11	232499.755	171167.522	232273.136	170470.061	1086.673
2-12	232413.110	171162.981	232188.446	170471.539	1087.844
2-13	232326.465	171158.440	232103.758	170473.018	1089.016
2-14	232239.821	171153.900	232019.069	170474.496	1090.187
2-15	232153.176	171149.359	231934.380	170475.974	1091.358
2-16	232066.531	171144.818	231849.692	170477.452	1092.53
2-17	231979.887	171140.277	231765.002	170478.931	1093.701
2-18	231893.243	171135.736	231681.102	170482.833	1094.873
2-19	231806.598	171131.195	231597.515	170487.704	1096.044
2-20	231719.953	171126.654	231513.079	170489.959	1097.215
2-21	231633.309	171122.114	231427.892	170489.905	1098.387
2-22	231546.664	171117.573	231341.922	170487.440	1099.558
2-23	231460.020	171113.032	231256.870	170487.800	1100.729
2-24	231373.375	171108.491	231172.181	170489.278	1101.901
2-25	231286.731	171103.950	231089.313	170496.360	1103.072
2-26	231188.179	171062.762	231013.008	170523.641	1104.244
2-27	231088.605	171018.429	230943.765	170572.657	1105.415

NOTES 1: generated by MicroStation
2. Adjusted ULC elevations (Refer to 2.2.4) per Section 6.5.2.

Table 13. Panel 3 East Waste Package End Point Coordinates (Meters)

Emplacement Drift	East Side		West Side		Elevation [2]
	Northing	Easting	Northing	Easting	
3-1E	236137.403	172140.248	235992.979	171695.756	1042.519
3-2E	236081.661	172230.815	235894.184	171653.820	1043.69
3-3E	236012.902	172281.320	235795.390	171611.884	1044.861
3-4E	235936.845	172309.363	235696.595	171569.949	1046.033
3-5E	235835.884	172260.760	235597.800	171528.013	1047.204
3-6E[1]	235733.817	172208.754	235499.006	171486.077	1048.375
3-7E[1]	235631.751	172156.749	235400.211	171444.142	1049.546
3-8E[1]	235529.684	172104.743	235305.976	171416.236	1050.718
3-9E[1]	235427.618	172052.738	235219.332	171411.696	1051.889
3-10E[1]	235325.552	172000.733	235132.688	171407.155	1053.06
3-11E[1]	235223.485	171948.727	235046.044	171402.614	1054.232
3-12E[1]	235121.419	171896.722	234959.399	171398.074	1055.403
3-13E[1]	235023.895	171858.695	234872.755	171393.533	1056.574
3-14E	234932.407	171839.249	234786.111	171388.992	1057.746
3-15E[1]	234837.896	171810.496	234699.466	171384.451	1058.917
3-16E[1]	234749.206	171799.660	234612.822	171379.911	1060.088
3-17E[1]	234657.945	171780.909	234526.178	171375.370	1061.26
3-18E[1]	234566.457	171761.463	234439.533	171370.829	1062.431
3-19E[1]	234474.970	171742.017	234352.889	171366.288	1063.602

NOTES: 1. West coordinates are generated by MicroStation.
2. Adjusted ULC elevations (Refer to 2.2.4) per Section 6.5.2.

Table 14. Panel 3 West Waste Package End Point Coordinates (Meters)

Emplacement Drift	East Side		West Side		Elevation [3]
	Northing	Easting	Easting	Northing	
3-1W	236237.413	171661.675	236052.003	171091.041	1037.477
3-2W	236138.618	171619.739	235953.208	171049.105	1038.648
3-3W	236039.823	171577.803	235854.413	171007.169	1039.819
3-4W	235941.028	171535.867	235755.618	170965.233	1040.991
3-5W	235842.233	171493.931	235656.823	170923.297	1042.162
3-6W	235743.438	171451.995	235558.029	170881.361	1043.333
3-7W	235644.644	171410.059	235459.234	170839.425	1044.505
3-8W	235545.849	171368.123	235360.439	170797.489	1045.676
3-9W [1]	235447.055	171326.187	235262.112	170756.993	1046.847
3-10W [1]	235351.990	171295.731	235172.007	170741.800	1048.018
3-11W [1]	235264.306	171287.990	235085.363	170737.259	1049.19
3-12W [1]	235177.661	171283.449	234998.719	170732.718	1050.361
3-13W [1]	235091.017	171278.907	234912.075	170728.177	1051.532
3-14W [1]	235004.373	171274.366	234825.430	170723.637	1052.704
3-15W [1]	234917.728	171269.825	234738.786	170719.096	1053.875
3-16W [1]	234831.084	171265.284	234652.142	170714.555	1055.046
3-17W [1]	234744.439	171260.744	234565.497	170710.014	1056.218
3-18W [1]	234657.795	171256.203	234478.853	170705.473	1057.389
3-19W [1]	234571.151	171251.662	234392.207	170700.933	1058.56
3-20W [1]	234484.507	171247.121	234305.564	170696.392	1059.732
3-21W [1]	234397.863	171242.580	234218.920	170691.851	1060.903
3-22W [1]	234311.219	171238.040	234132.276	170687.310	1062.074
3-23W [2]	234224.575	171233.499	234045.632	170682.769	1063.245
3-24W [2]	234137.931	171228.958	233958.988	170678.229	1064.416
3-25W [2]	234051.285	171224.417	233872.342	170673.688	1065.588
3-26W [2]	233964.640	171219.877	233785.698	170669.147	1066.759

NOTES: 1. East coordinates are generated by MicroStation
2. Coordinates are generated by MicroStation
3. Adjusted ULC elevations (Refer to 2.2.4) per Section 6.5.2.

Table 15. Panel 4 Waste Package End Point Coordinates (Meters)

Emplacement Drift	East Side		West Side		Elevation [3]
	Northing	Easting	Northing	Easting	
4-1	236042.732	171062.509	235910.955	170656.939	1039.005
4-2	235943.937	171020.573	235759.426	170452.704	1040.176
4-3	235845.143	170978.637	235659.733	170408.004	1041.347
4-4	235746.348	170936.701	235560.938	170366.068	1042.519
4-5	235647.554	170894.765	235462.144	170324.132	1043.69
4-6	235548.759	170852.829	235363.349	170282.196	1044.861
4-7	235449.964	170810.893	235264.554	170240.260	1046.033
4-8	235351.169	170768.957	235165.759	170198.324	1047.204
4-9	235252.842	170728.461	235061.884	170140.754	1048.375
4-10	235155.124	170689.838	234973.145	170129.767	1049.546
4-11	235068.480	170685.297	234886.501	170125.226	1050.718
4-12	234981.835	170680.756	234799.856	170120.685	1051.889
4-13	234895.191	170676.215	234713.212	170116.144	1053.06
4-14	234808.547	170671.674	234626.568	170111.603	1054.232
4-15	234721.903	170667.133	234539.924	170107.062	1055.403
4-16	234635.258	170662.592	234453.279	170102.522	1056.574
4-17	234548.614	170658.052	234366.635	170097.981	1057.746
4-18	234461.969	170653.511	234279.992	170093.440	1058.917
4-19	234375.325	170648.970	234193.346	170088.899	1060.088
4-20	234288.681	170644.429	234106.823	170084.731	1061.26
4-21	234202.036	170639.888	234023.727	170091.111	1062.431
4-22[1]	234115.392	170635.348	233940.912	170098.356	1063.602
4-23[1]	234028.748	170630.807	233858.098	170105.601	1064.773
4-24[1]	233942.103	170626.266	233775.283	170112.847	1065.945
4-25[1]	233855.459	170621.725	233692.467	170120.092	1067.116
4-26[1]	233768.814	170617.184	233609.653	170127.338	1068.288
4-27[2]	233682.170	170612.644	233526.841	170134.594	1069.459
4-28[2]	233595.525	170608.103	233448.442	170155.429	1070.63
4-29[2]	233508.881	170603.562	233378.792	170203.192	1071.801
4-30[2]	233422.007	170598.316	233321.782	170289.858	1072.973

NOTES: 1. East coordinates are generated by MicroStation
2. East coordinates generated by MicroStation are located to permit extension of Panel 4 Exhaust Main, dual section, if required.
3. Adjusted ULC elevations (Refer to 2.2.4) per Section 6.5.2.

7.7 EXHAUST SHAFT #1 COORDINATES

Exhaust Shaft #1 was reconstituted in the ULCLA design with the movement of Panel 1 as described in Sections 6.4 and 6.8. Table 16 gives the new coordinates for Exhaust Raise #1. The conversion factor from Section 0 is applied. Table 16 values have been generated using MicroStation (refer to Section 4.2.2).

Table 16. Exhaust Shaft #1 Coordinates

Exhaust Shaft #1	Meters			Feet		
	Northing	Easting	Elevation	Northing	Easting	Elevation
Collar	233713	170692	1425	766773	560013	4675
Station			1069			3508

NOTE: Values have been rounded to a whole number

ATTACHMENT I
ULC NORTH RAMP AND ACCESS MAIN INTERSECTION

Attachment I describes the general arrangement of the ESF and the future extension of the access main. The ULC excavation geometry at the intersection of the North Ramp curve and the access main, with the associated turnout, are described and illustrated in a plan view and a series of cross-sectional views. A site-specific stationing format is developed for the aforementioned location to simplify the discussion.

Excavation As-built and ULC Access Main

The North Ramp descends at approximately -2.15% on an azimuth of approximately 298° 58 ft (Reference 2.2.4, Figure 3). At STA 21+86.960 the North Ramp begins to curve on a 305-meter radius. The curve segment redirects the North Ramp into the access main such that at STA 28+04.323 the azimuth has changed to 183° and the gradient has become +1.35%. The access main continues on the 183° azimuth at +1.35% until STA 56+54.323. At STA 56+54.323 the access main begins turning east in a 305-meter radius curve with an increased gradient of approximately +2.62% on the South Ramp. The curve segment redirects the tunnel such that at STA 64+25.206 the azimuth is 91°. The gradient remains at approximately +2.62%.

The future north extension to the access main is on a 3° azimuth and a -1.35% gradient (Reference 2.2.4, Figures 3 and 6). The excavation will start from the tangent point of the North Ramp curve and the access main at approximately STA 28+04.323.

Stationing Nomenclature for the North Extension of the Access Main

In this attachment the station nomenclature and the horizontal and vertical change have been performed in English units.

The deflection point in the North Ramp gradient occurs at the North Ramp vertical point of tangency (VPT) with the access main, which is at approximately STA 28+04.323. In the context of this calculation, STA 28+04.323 will be designated STA 00+00.00 and will increase in magnitude towards the north. For example, the station 50-feet north of STA 00+00.00 is identified as STA 00+50.00 and a further 50-feet north is STA 01+00.00. The plan view of this area is shown in Figure I-1. Also STA 00+00.00 will have an elevation of 0.00 feet in the context of this calculation.

Moving towards the north from designated STA 00+00.00, the gradient for the future north extension of the access main is -1.35% and the North Ramp rises at +2.15% turning to an easterly direction. Therefore, the future north extension of the access main and the North Ramp curve are diverging at the rate of 3.5-feet for every 100 feet of horizontal excavation based on the respective gradients.

Track Turnout Parameters

A No. 11 track turnout[1] is used for curves that have a 305 m (1000 ft) radius (Assumption 3.2.3). The track turnout for the excavated turnout is a No. 6 turnout (Assumption 3.2.3). At the convergence of the North Ramp, the future north extension of the access main, and the excavated turnout, the No. 6 track turnout is located north of the No. 11 track turnout. The heels of the No. 6 and No. 11 track turnout frogs are adjoined (Assumption 3.2.4) as shown in Figure I-1.

1 The word "track" is appended to "turnout" denoting the railroad design component commonly called a "switch". AREMA (Reference 2.2.1) nomenclature for "switch" is the word "turnout" alone, however project convention uses the term "turnout" for the excavation in which the "switch" is located. Therefore, in order to distinguish the structural component from the excavation component, "track" is appended to "turnout" in this calculation.

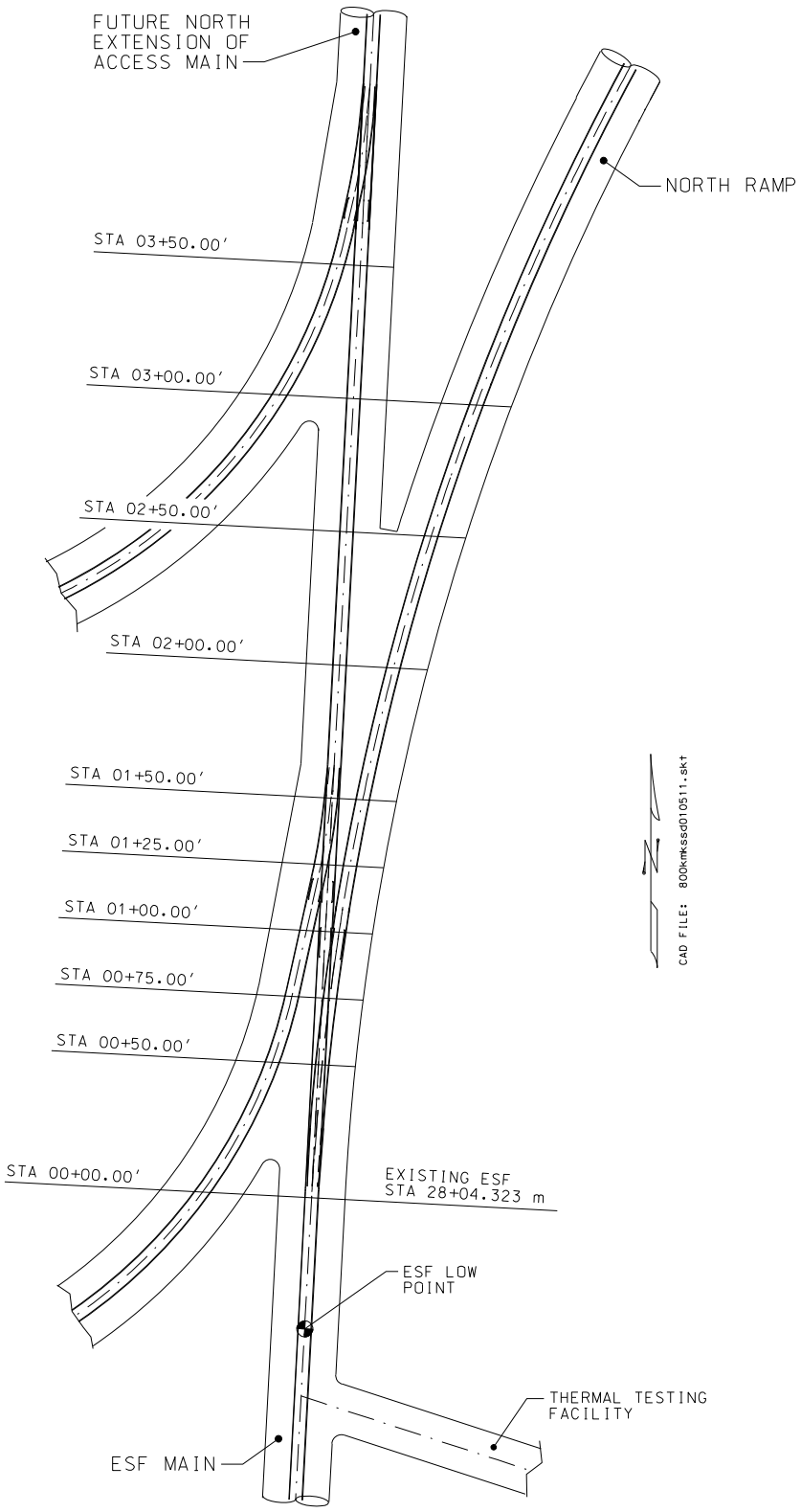

Figure I-1. North Ramp and Future North Extension of the Access Main Intersection

Section Views Progressing North

As noted above, the combined vertical divergence between the North Ramp and the future north extension of the access main is 3.5 ft per 100 ft of horizontal travel. Concurrently, the North Ramp moves away horizontally from the access main azimuth of 3° to approximately 118° azimuth.

In order to visualize the changing spatial relationship between the future north extension of the access main and the North Ramp, a series of cross-sectional views are constructed. STA 00+00.00, shown in Figure I-2, is the origin for this perspective. STA 00+00.00 section view shows the spatial relationship amongst the three congruent excavations: turnout, North Ramp, and access main. The turnout is west of the existing North Ramp VPT separated by a pillar. Coincident with the North Ramp is the future north extension of the access main. For illustrative purposes, a road base with rail, about three feet in thickness (Assumption 3.2.6), is shown in the section views. Also, the turnout excavation is held in the same horizontal plane as the access main (Assumption 3.2.5) in order to remain in agreement with the access main projection in each section.

The ULC design for the future north extension of the access main excavation geometry is asymmetrical with the North Ramp from STA 00+00.00 to the north. As a result, an increasingly pronounced trough-shaped invert excavation develops defined by a noticeable bench in the North Ramp invert as the two excavations diverge. Concurrently, the crown of the future north extension of the access main loses elevation relative to the crown of the North Ramp Curve.

The elevation differential and the horizontal movement towards the east are illustrated in Figure I-2 through Figure I-9 and are compiled in Table I-1.

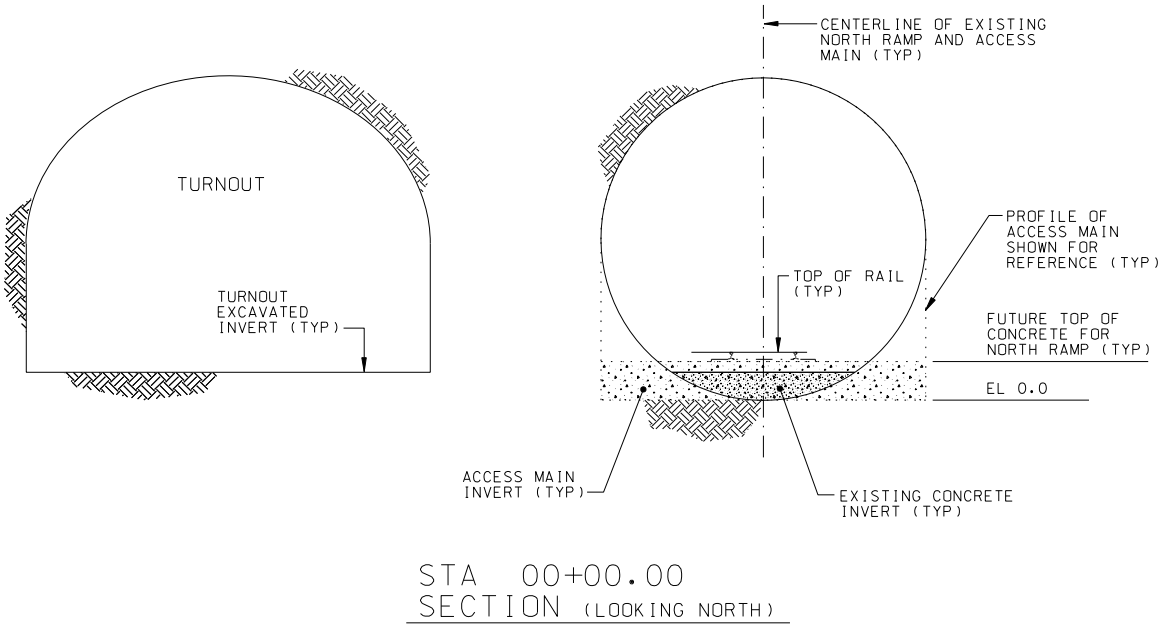

Figure I-2. Section View at Common Elevation Station 00+00.00

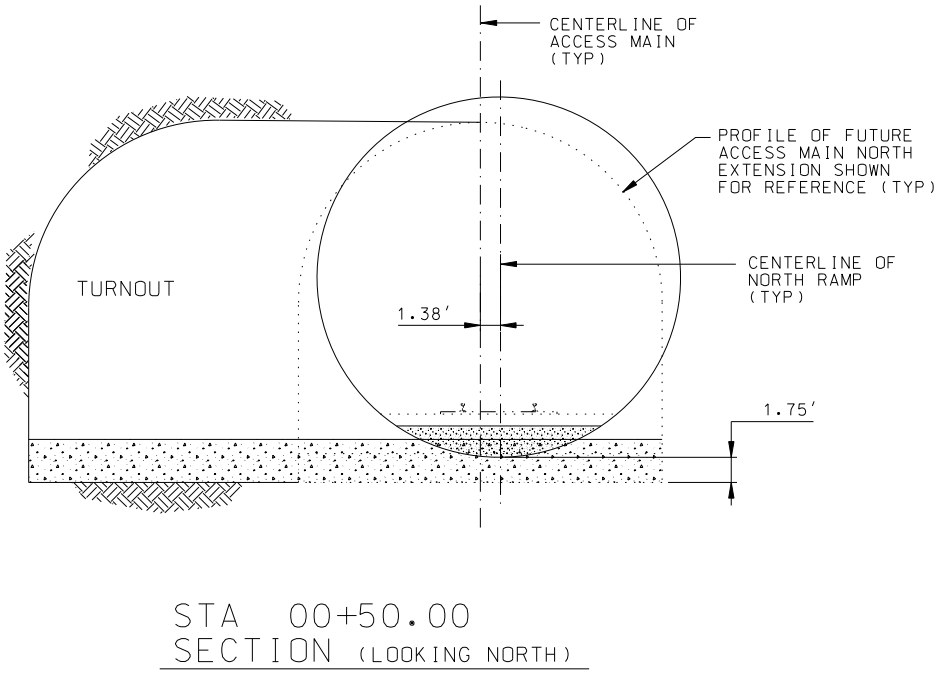

Figure I-3. Section View at Station 00+50.00

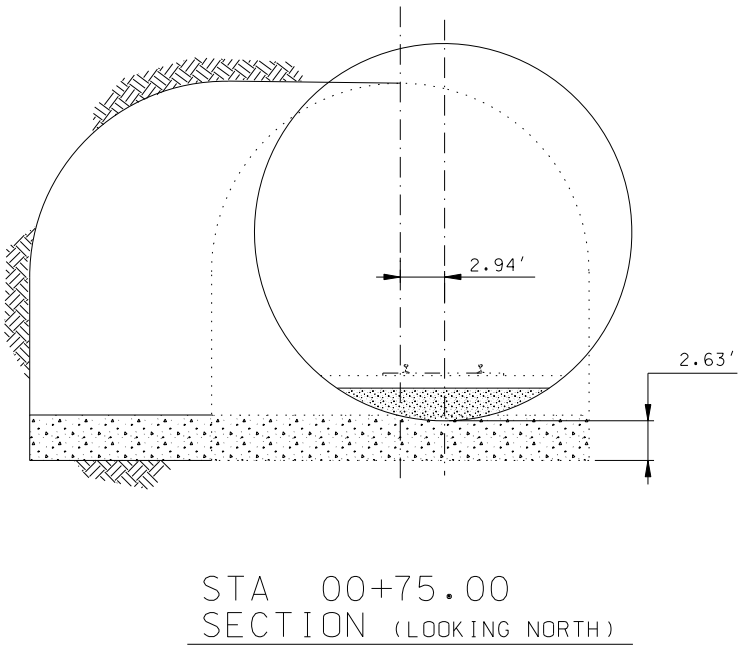

Figure I-4. Section View at Station 00+75.00

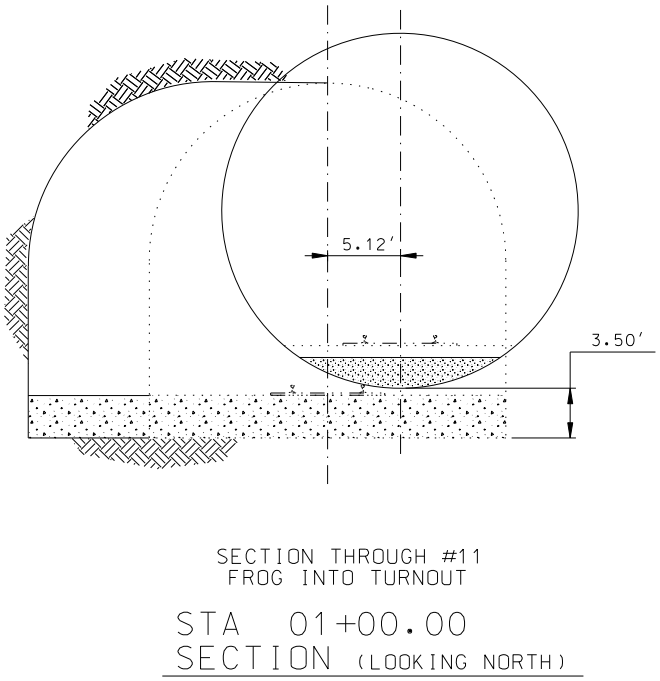

Figure I-5. Section View at Station 01+00.00

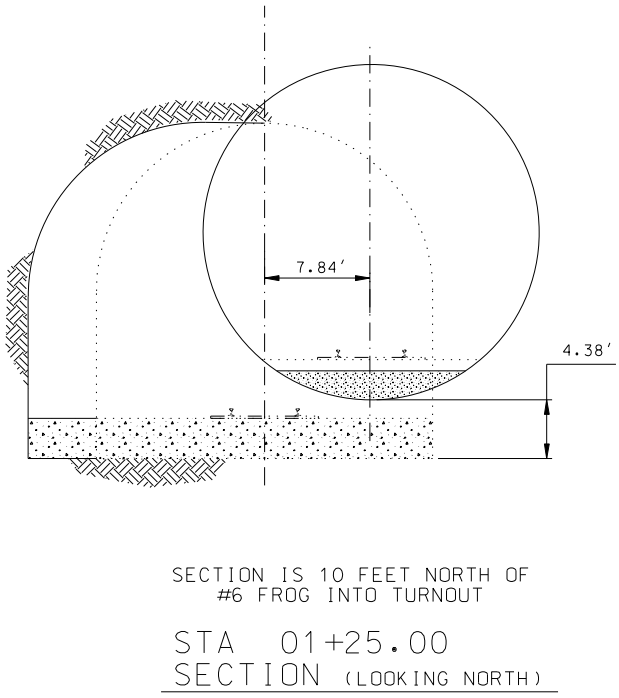

Figure I-6. Section View at Station 01+25.00

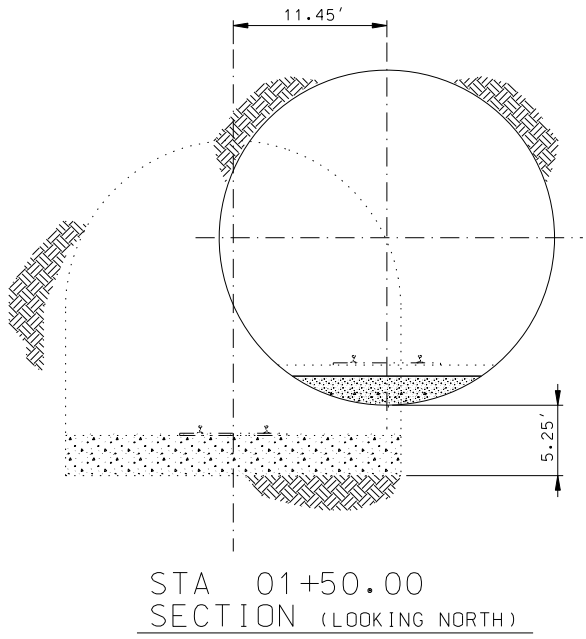

Figure I-7. Section View at Station 01+50.00

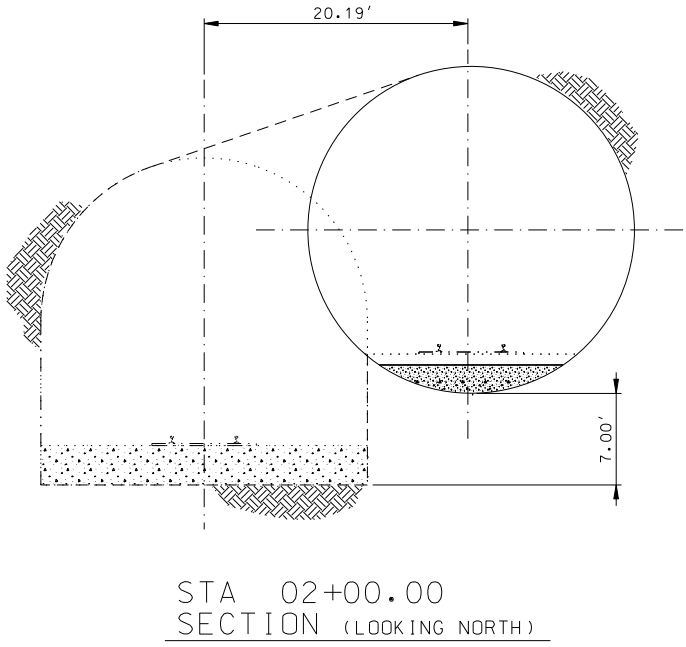

Figure I-8. Section View at Station 02+00.00

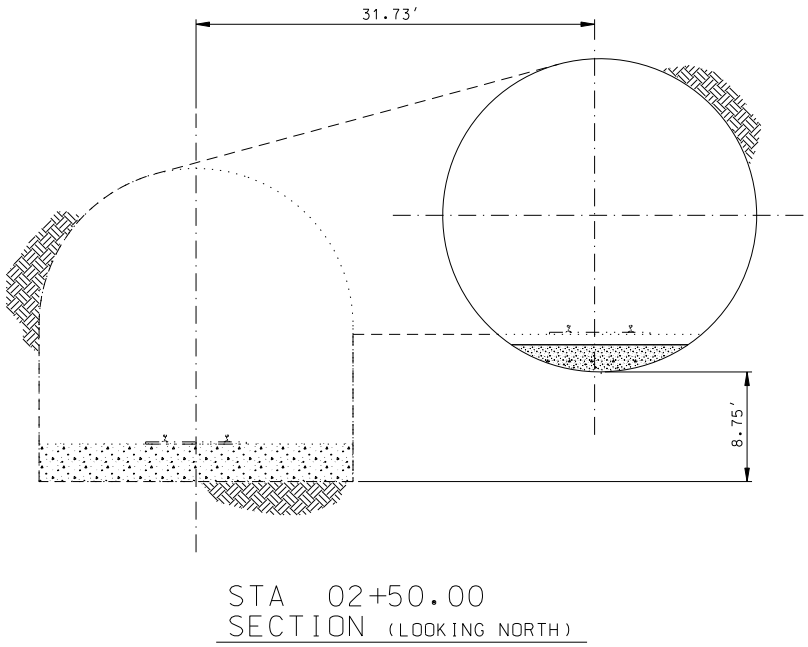

Figure I-9. Section View at Station 02+50.00

Table I-1. Spatial Variance Between the Access Main and the North Ramp in the ULC

Figure	STATION	Elevation Differential		Horizontal Offset East	
		Feet	Meter	Feet	Meter
I-2	STA 00+00.00	0.0	0.0	0.0	0.0
I-3	STA 00+50.00	1.75	0.53	1.38	0.42
I-4	STA 00+75.00	2.63	0.80	2.94	0.90
I-5	STA 01+00.00	3.50	1.07	5.12	1.56
I-6	STA 01+25.00	4.38	1.34	7.84	2.39
I-7	STA 01+50.00	5.25	1.60	11.45	3.49
I-8	STA 02+00.00	7.00	2.13	20.19	6.15
I-9	STA 02+50.00	8.75	2.67	31.73	9.67

NOTE: Conversion factor applied is given Section 0

ATTACHMENT II
DESIGN IMPEDIMENT MITIGATION FOR ULCLA

Attachment II examines several design options that can be considered for a design solution to resolve the affects of the divergent excavations described in Attachment I.

II.1 MODIFIED GRADIENT ALTERNATIVE

Option 1: Maintain Ramp Gradient

The origin has been established as STA 00+00.00 in Attachment I. The elevation of STA 00+00 is 1065.000 m (3494.09 ft) (Reference 2.2.4, Figure 3). The congruent gradient would be carried through the No. 11 and No. 6 turnout arrangements. This maintains both tracks at the same elevation and precludes uneven rail placement. Referring to Attachment I, Figure I-1, the lineal extent of adjoining No. 11 and No. 6 turnouts is approximately 160 ft from STA 00+00.00 to a point approximately 10 ft north of STA 01+50.00. In order to provide an allowance for a grade change, this study will extend the affected lineal distance by 40 ft to STA 02+00.00.

- The change in elevation from STA 00+00.00 to STA 01+50.00 plus 10 ft is equal to 3.44 ft (the product of the gradient and the horizontal distance, or 0.0215 * 160).
- The elevation at STA 01+50.00 plus 10 ft is 3497.53 ft (3494.09 + 3.44).
- The elevation at STA 02+00.00 is also 3497.53 ft since the 40 ft allowance for the vertical curve will be flat for the purposes of this study.

Moving forward from STA 02+00.00, the grade of the north extension of the access main is re-aligned to the design gradient of -1.35% to the north. The lineal distance available to merge the calculated elevation of 3497.53 ft at STA 02+00.00 with the projected design elevation of the north extension of the access main is 163 ft (the distance between STA 02+00.00 to the frog of the adjacent No. 6 turnout located at approximately STA 03+63.00).

- The projected elevation at STA 03+63.00 is equal to the elevation at STA 00+00.00 less the product of the horizontal distance of 363 ft and the 1.35% gradient. Which is 3494.09-363*0.0135 3489.19 ft
- The elevation difference between STA 02+00.00 and STA 03+63.00 is equal to 3497.53 ft less 3489.19 ft, or 8.34 ft.
- An elevation difference of 8.34 ft over the horizontal distance between STA 02+00.00 and STA 03+63.00 is equal to 8.34/163*100, or 5.12%.

Note that this excludes an allowance for a vertical curve, which would reduce the available alignment length and result in a larger elevation difference leading to a steeper grade.

Design Impact

- The No. 6 turnout departure is on a grade of 2.15%.
- A gradient of 5.12% to return the access main onto the repository plane exceeds the 2.5% design constraint (refer to Section 4.3.1).

- The proposed design inserts a barrier into the repository drainage plane.
- The proposed design could reduce the available elevation difference from the access main to the emplacement drift and compromise the ability to remove water from the emplacement area.

Option 2: Maintain Access Main Gradient

The origin, as established in Attachment I, is STA 00+00.00 serves as the start for this assessment since it is the common elevation.

The access main gradient of 1.35% is carried through the No. 11 and No. 6 turnouts arrangements to STA 02+0.00 as shown in Figure I-1.

Referring to Figure I-8, the elevation difference between the future north extension of the access main and the North Ramp at STA 02+0.00 is 7.00 ft and the two excavations centerlines are approximately 20 ft apart.

From STA 02+0.00 the access main remains on azimuth at a 1.35% gradient while the North Ramp commences to climb at +2.5% (refer to Section 4.3.1) in effect undercutting the existing North Ramp floor that has a gradient of approximately +2.15% (Section 6.2.1).

The difference in the actual gradient and the maximum allowable gradient is 0.35%. Converted to degrees, 0.35% is equivalent 0.20053 degrees.

The distance that the undercut would have to be carried up the North Ramp from STA 02+0.00 for convergence is approximately 2000 ft (7/sin 0.20053).

Design Impact

- Extensive removal of existing concrete invert (Assumption 3.2.6) commencing from STA 00+0.00, through STA 02+0.00, and a further 2000 ft of concrete invert in the North Ramp.
- Invert excavation from STA 00+0.00, through STA 02+0.00, and an additional 2000 ft in the North Ramp.
- Creating a large access main and North Ramp intersection that is 32 ft. in height.
- Requires that a full concrete invert be re-established.
- Based on the size of the intersection, the ground support will have to be fully re-evaluated.
- Based on the need for extensive concrete invert removal and replacement, combined with the significant amount of excavation, the schedule could be impacted noticeably.

II.2 BYPASS ALTERNATIVE

The bypass alternative offsets the future north extension of the access main from the North Ramp while maintaining the access main slope of 1.35% to the north. The excavation geometry for the bypass alternative is shown in Figure II-1.

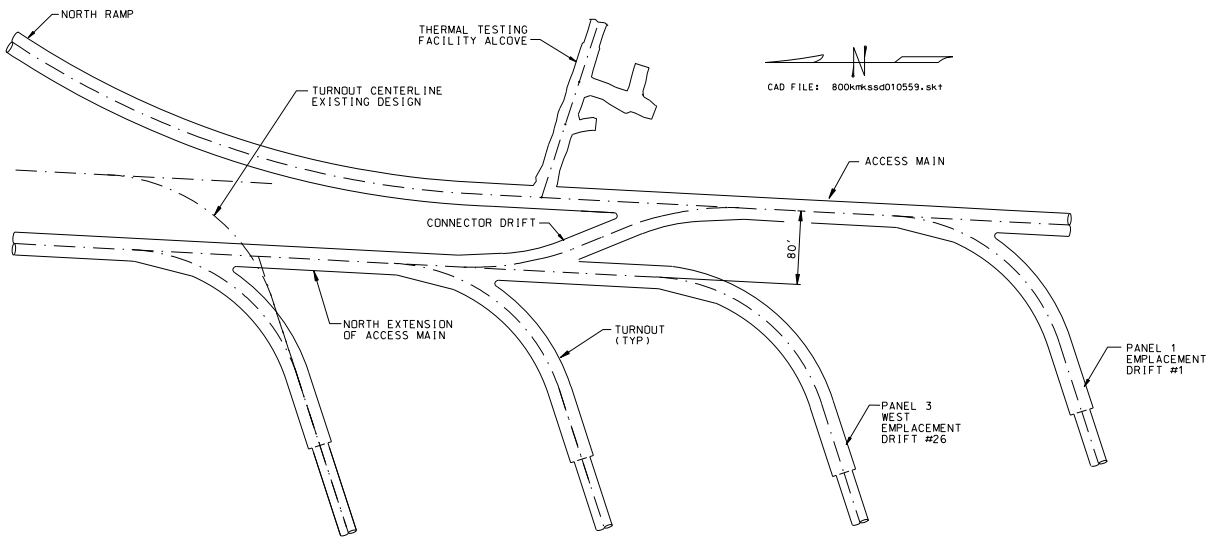

Figure II-1. Excavation Geometry for the Bypass Alternative

A connector drift that shifts the north extension of the access main 80-feet to the west from the existing access main is incorporated into the design (Assumption 3.2.7). A No. 6 track turnout is utilized in the crossover to maintain continuity with the existing design (Section 6.2.2). The 80-foot offset to the west is a function of a No. 6 track turnout leading into and out of the crossover drift straight section, and the minimum required spacing between nonemplacement drifts (Section 4.3.1).

The lineal extent of the crossover is bounded by the selected track turnout, a straight segment which is closely related to the overall length of the TEV (Assumption 3.2.7), and the alignment with the north extension of the access main.

The placement of the crossover in the access main takes into consideration the end of the North Ramp and the excavation low point in conjunction with the footprint of the crossover and the supportable roof span in proximity to Thermal Testing Facility Alcove.

ATTACHMENT III
PANEL 1 OPTIMIZATION FOR ULCLA

The design optimization of Panel 1, shown in Figure III-1, is a continuation of the North Ramp curve reconciliation. The design optimization considers the available emplacement area and repositioning of Panel 1 in conjunction with Panel 3E and 3W and the impact to the subsurface layout as a whole.

Modifications to Panel 1 and Vicinity

- Panel 1 is moved south, four emplacement drift positions from its current location.
- Panel 1 will have six emplacement drifts, of which two, 1-5 and 1-6, are located in the presently unoccupied area shared with Panel 2.
- Former Panel 1 emplacement drifts 1-5, 1-6, 1-7, and 1-8 are re-numbered as 1-1, 1-2, 1-3, and 1-4, respectively (Note: current emplacement drifts 1-1, 1-2, 1-3, and 1-4 are moved into Panel 3 West).
- Panel 1 exhaust main is re-aligned parallel with the access main and the emplacement drifts are lengthened proportionately to intersect.
- The access drift from the ESF to Panel 4 is positioned at the mid-pillar between Panel 1 and Panel 2.
- Exhaust Raise #1 is moved south of its current location and reconstituted into the repositioned Panel 1 Emplacement Drift 1 and the exhaust main.
- The performance confirmation drift is reconfigured to pass below and adjacent to the third of the six emplacement drifts that constitute the revised Panel 1.
- An exhaust raise replaces the ventilation ramp from the ECRB to Panel 4 exhaust main.
- The Vent Access to ECRB ramp (Reference 2.2.4, Table 6) is replaced with a Vent Raise to the ECRB of equal ventilation capacity since extending the emplacement drifts precludes a ramp from the ECRB to the Panel 3 Exhaust Main. This does not prevent reinstituting a ramp at an alternate location if it is determined advantageous for construction.
- Panel 3 West turnouts, from 3-9 through 3-26, are shifted to the west approximately 24.4 m (80 ft).
- Panel 3 West absorbs emplacement drifts 1-1, 1-2, 1-3, and 1-4, as re-numbered emplacement drifts 3-23W, 3-24W, 3-25W, and 3-26W.
- Panel 3 East turnouts are shifted to the west approximately 24.4 m (80 ft).
- Panel 4 emplacement drifts remain unchanged except in the vicinity of Panel 1 where they have moved to accommodate the exhaust main re-alignment

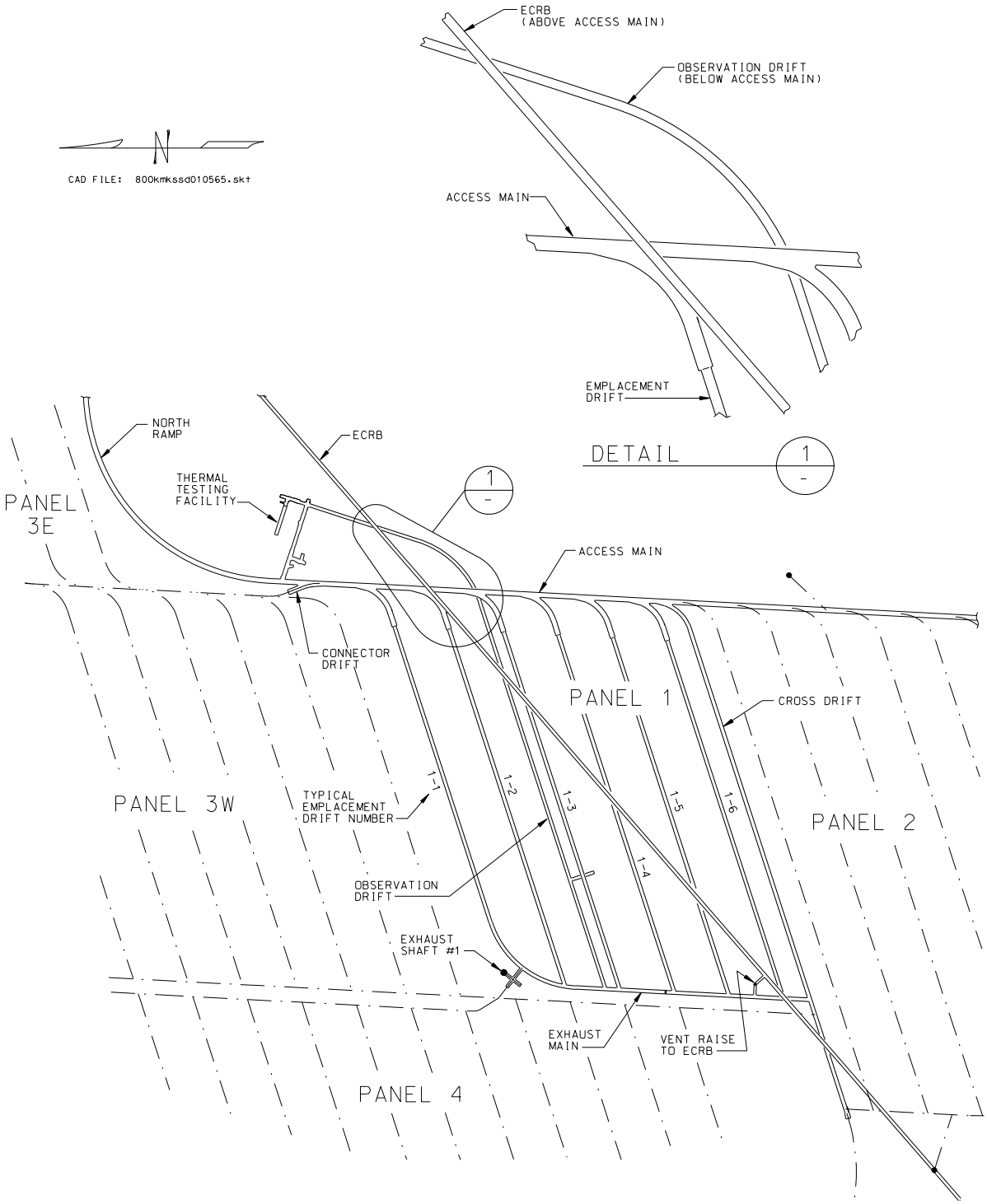

Figure III-1. Emplacement Panel Configuration

ATTACHMENT IV
AVAILABLE EMPLACEMENT DRIFT LENGTH IN THE ULCLA

ULCLA AVAILABLE EMPLACEMENT DRIFT TABLES

The table entries that remain unchanged for Panel 1 through Panel 4, given in Table IV-1 through Table IV-5, respectively, are obtained from the ULC (Reference 2.2.4). Table values that have changed are generated using MicroStation (Section 4.2.2) and are indicated as such. The Cumulative Available Drift Length value changes accordingly.

Table IV-1. Panel 1 Available Emplacement Drift Length (Meters)

Drift	Excavated Length	Operational Standoff & Footprint Restriction [1]	Available Drift Length [2]	Cumulative Available Drift Length
1-1	507.311	16.5	490.811	490.811
1-2	595.858	16.5	579.358	1070.169
1-3	597.055	16.5	580.555	1650.724
1-4	597.055	16.5	580.555	2231.279
1-5	597.055	16.5	580.555	2811.834
1-6	597.055	16.5	580.555	3392.389
Totals	3491.389	99	3392.389	

NOTES: 1. Refer to Assumption 3.2.1 and 3.2.2
2. Generated by MicroStation

Table IV-2. Panel 2 Available Emplacement Drift Length (Meters)

Drift	Excavated Length	Operational Standoff & Footprint Restriction[1]	Available Drift Length	Cumulative Available Drift Length
2-1	779.342	16.5	762.842 [2]	762.842
2-2	779.342	16.5	762.842	1525.684
2-3	778.600	16.5	762.100	2287.784
2-4	775.397	16.5	758.897	3046.681
2-5	772.196	16.5	755.696	3802.377
2-6	768.993	16.5	752.493	4554.870
2-7	765.790	16.5	749.290	5304.160
2-8	762.588	16.5	746.088	6050.248
2-9	759.385	16.5	742.885	6793.133
2-10	756.183	16.5	739.683	7532.816
2-11	749.854	16.5	733.354	8266.170
2-12	743.526	16.5	727.026	8993.196
2-13	737.196	16.5	720.696	9713.892
2-14	730.868	16.5	714.368	10428.260
2-15	724.539	16.5	708.039	11136.299
2-16	718.210	16.5	701.710	11838.009
2-17	711.881	16.5	695.381	12533.390
2-18	705.552	19.049	686.503	13219.893
2-19	699.223	22.616	676.607	13896.500
2-20	692.895	23.434	669.461	14565.961
2-21	686.565	21.821	664.744	15230.705
2-22	680.237	17.676	662.561	15893.266
2-23	673.908	16.5	657.408	16550.674
2-24	667.579	16.5	651.079	17201.753
2-25	655.358	16.5	638.858	17840.611
2-26	583.366	16.5	566.866	18407.477
2-27	485.213	16.5	468.713	18876.190
Totals	19343.786	467.596	18876.190	

NOTES: 1. Refer to Assumption 3.2.1 and 3.2.2
2. Generated by MicroStation

Table IV-3. Panel 3 East Available Emplacement Drift Length (Meters)

Drift	Excavated Length	Operational Standoff & Footprint Restriction [1]	Available Drift Length	Cumulative Available Drift Length
3-1E [2]	757.174	289.808	467.366	467.366
3-2E [2]	798.926	192.237	606.689	1074.055
3-3E [2]	808.132	104.246	703.886	1777.941
3-4E [2]	793.966	16.5	777.466	2555.407
3-5E [2]	786.956	16.5	770.456	3325.863
3-6E	776.367	16.5	759.867	4085.730
3-7E	765.779	16.5	749.279	4835.009
3-8E	740.438	16.5	723.938	5558.947
3-9E	690.531	16.5	674.031	6232.978
3-10E	640.625	16.5	624.125	6857.103
3-11E	590.716	16.5	574.216	7431.319
3-12E	540.810	16.5	524.310	7955.629
3-13E	505.600	16.5	489.100	8444.729
3-14E	492.075	18.648	473.427	8918.156
3-15E	474.255	26.285	447.970	9366.126
3-16E	458.581	17.231	441.350	9807.476
3-17E	442.909	16.5	426.409	10233.885
3-18E	427.237	16.5	410.737	10644.622
3-19E	411.564	16.5	395.064	11039.686
Totals	11902.641	862.955	11039.686	

NOTES: 1. Refer to Assumption 3.2.1 and 3.2.2
2. Refer to Section 2.2.4

Table IV-4. Panel 3 West Available Emplacement Drift Length (Meters)

Drift	Excavated Length	Operational Standoff & Footprint Restriction[1]	Available Drift Length	Cumulative Available Drift Length
3-1W [2]	616.500	16.5	600.000	600.000
3-2W [2]	616.500	16.5	600.000	1200.000
3-3W [2]	616.500	16.5	600.000	1800.000
3-4W [2]	616.500	16.5	600.000	2400.000
3-5W [2]	616.500	16.5	600.000	3000.000
3-6W [2]	616.500	16.5	600.000	3600.000
3-7W [2]	616.500	16.5	600.000	4200.000
3-8W [2]	616.500	16.5	600.000	4800.000
3-9W	614.986	16.5	598.486	5398.486
3-10W	598.937	16.5	582.437	5980.923
3-11W	595.573	16.5	579.073	6559.996
3-12W	595.573	16.5	579.073	7139.069
3-13W	595.571	16.5	579.071	7718.140
3-14W	595.571	16.5	579.071	8297.211
3-15W	595.570	16.5	579.070	8876.281
3-16W	595.571	16.5	579.071	9455.352
3-17W	595.571	16.5	579.071	10034.423
3-18W	595.571	16.5	579.071	10613.494
3-19W	595.571	16.5	579.071	11192.565
3-20W	595.571	16.5	579.071	11771.636
3-21W	595.571	16.5	579.071	12350.707
3-22W	595.571	16.5	579.071	12929.778
3-23W	595.572	16.5	579.072	13508.850
3-24W	595.571	16.5	579.071	14087.921
3-25W	595.571	16.5	579.071	14666.992
3-26W	595.571	16.5	579.071	15246.063
Totals	15675.063	429	15246.063	

NOTES: 1. Refer to Assumption 3.2.1 and 3.2.2
2. Refer to Section 2.2.4

Table IV-5. Panel 4 Available Emplacement Drift Length (Meters)

Drift	Excavated Length	Operational Standoff & Footprint Restriction [1]	Available Drift Length	Cumulative Available Drift Length
4-1	616.500	190.059	426.441	426.441
4-2	616.500	19.407	597.093	1023.534
4-3	616.500	16.5	600.000	1623.534
4-4	616.500	16.5	600.000	2223.534
4-5	616.500	16.5	600.000	2823.534
4-6	616.500	16.5	600.000	3423.534
4-7	616.500	16.5	600.000	4023.534
4-8	616.500	16.5	600.000	4623.534
4-9	634.452	16.5	617.952	5241.486
4-10	605.393	16.5	588.893	5830.379
4-11	605.393	16.5	588.893	6419.272
4-12	605.393	16.5	588.893	7008.165
4-13	605.393	16.5	588.893	7597.058
4-14	605.393	16.5	588.893	8185.951
4-15	605.393	16.5	588.893	8774.844
4-16	605.393	16.5	588.893	9363.737
4-17	605.393	16.5	588.893	9952.630
4-18	605.393	16.5	588.893	10541.523
4-19	605.393	16.5	588.893	11130.416
4-20	605.001	16.5	588.501	11718.917
4-21	593.519	16.5	577.019	12295.936
4-22 [2]	581.129	16.5	564.629	12860.565
4-23 [2]	568.736	16.5	552.236	13412.801
4-24 [2]	556.344	16.5	539.844	13952.645
4-25 [2]	543.951	16.5	527.451	14480.096
4-26 [2]	531.559	16.5	515.059	14995.155
4-27 [2]	543.790	41.1	502.651	15497.806
4-28 [2]	517.110	41.1	475.969	15973.775
4-29 [2]	462.114	41.1	420.974	16394.749
4-30 [2]	366.214	41.9	324.333	16719.082
Totals	17489.849	770.666	16719.082	

NOTES: 1. Refer to Assumption 3.2.1 and 3.2.2
2. Generated by MicroStation

ATTACHMENT V
ULCLA EXCAVATION DIMENSIONS WORKSHEET

Table V-1 Panel 1

No.	Non-Emplacement Development	Meters		Feet	
		Distance	Rounded	Distance	Rounded
1	Observation Drift	971.014	971	3185.82	3186
2 [1]	Observation Drift Alcove	n/a	40	n/a	131
3	Connector Drift	57.70	58	189.30	189
4 [1]	Vent Raise to ECRB Access	n/a	23	n/a	75
5	Vent Raise Access at ECRB	22.95	23	75.31	75
6	Vent Raise to ECRB	28.96	29	95.00	95
7	Cross Drift to Panel 4	899.61	900	2951.48	2951
8	Exhaust Main	554.85	555	1820.37	1820
9	Exhaust Raise # 1 Access	72.21	72	236.91	237
10	Exhaust Raise #1	355.73	356	1167.10	1167
Turnout [2]					
11	Turnout #1	93.160	93	n/a	305
12	Turnout #2	93.160	93	n/a	305
13	Turnout #3	93.160	93	n/a	305
14	Turnout #4	93.160	93	n/a	305
15	Turnout #5	93.160	93	n/a	305
16	Turnout #6	93.160	93	n/a	305
		Total	558		1830
Emplacement Drift					
17	Drift #1	507.311	507	1664.403	1664
18	Drift #2	595.858	596	1954.911	1955
19	Drift #3	597.055	597	1958.838	1959
20	Drift #4	597.055	597	1958.838	1959
21	Drift #5	597.055	597	1958.838	1959
22	Drift #6	597.055	597	1958.838	1959
		Total	3491		11455

NOTES: 1. Consistent with ULC (Reference 2.2.4)
2. Adjusted for 1.5 m offset (see Section 6.5.1)

Table V-2 Panel 2

No.	Non-Emplacement Development	Meters		Feet	
		Distance	Rounded	Distance	Rounded
1	Exhaust Main	3047.28	3047	9997.62	9998
2	Access Main Offset Drift	143.10	143	469.49	469
3 [1]	Exhaust Shaft #3 Access Drift	n/a	20	n/a	66
4 [1]	Exhaust Shaft #3	n/a	292	n/a	958
5 [1]	Intake Shaft #3 Access Drift	n/a	109	n/a	358
6 [1]	Intake Shaft #3	n/a	248	n/a	814
7 [1]	ECRB Exhaust Shaft Access	n/a	91	n/a	299
8 [1]	ECRB Exhaust Shaft	n/a	398	n/a	1306
Turnout [2]					
9	Turnout #1	93.160	93	n/a	305
10	Turnout #2	93.160	93	n/a	305
11	Turnout #3	93.160	93	n/a	305
12	Turnout #4	93.160	93	n/a	305
13	Turnout #5	93.160	93	n/a	305
14	Turnout #6	93.160	93	n/a	305
15	Turnout #7	93.160	93	n/a	305
16	Turnout #8	93.160	93	n/a	305
17	Turnout #9	93.160	93	n/a	305
18	Turnout #10	93.160	93	n/a	305
19	Turnout #11	93.160	93	n/a	305
20	Turnout #12	93.160	93	n/a	305
21	Turnout #13	93.160	93	n/a	305
22	Turnout #14	93.160	93	n/a	305
23	Turnout #15	93.160	93	n/a	305
24	Turnout #16	93.160	93	n/a	305
25	Turnout #17	93.160	93	n/a	305
26	Turnout #18	93.160	93	n/a	305
27	Turnout #19	93.160	93	n/a	305
28	Turnout #20	93.160	93	n/a	305
29	Turnout #21	93.160	93	n/a	305
30	Turnout #22	93.160	93	n/a	305
31	Turnout #23	93.160	93	n/a	305
32	Turnout #24	93.160	93	n/a	305
33	Turnout #25	93.160	93	n/a	305
34	Turnout #26	n/a	102	n/a	336
35	Turnout #27	n/a	148	n/a	458
		Total	2575		8419

Table V-2. Panel 2 (Continuation)

No.	Emplacement Drift[1]	Meters		Feet	
		Distance	Rounded	Distance	Rounded
36 [3]	Drift #1	779	779.342	2556.891	2557
37	Drift #2	n/a	779	n/a	2557
38	Drift #3	n/a	779	n/a	2554
39	Drift #4	n/a	775	n/a	2544
40	Drift #5	n/a	772	n/a	2533
41	Drift #6	n/a	769	n/a	2523
42	Drift #7	n/a	766	n/a	2512
43	Drift #8	n/a	763	n/a	2502
44	Drift #9	n/a	759	n/a	2491
45	Drift #10	n/a	756	n/a	2481
46	Drift #11	n/a	750	n/a	2460
47	Drift #12	n/a	744	n/a	2439
48	Drift #13	n/a	737	n/a	2419
49	Drift #14	n/a	731	n/a	2398
50	Drift #15	n/a	725	n/a	2377
51	Drift #16	n/a	718	n/a	2356
52	Drift #17	n/a	712	n/a	2336
53	Drift #18	n/a	706	n/a	2315
54	Drift #19	n/a	699	n/a	2294
55	Drift #20	n/a	693	n/a	2273
56	Drift #21	n/a	687	n/a	2253
57	Drift #22	n/a	680	n/a	2232
58	Drift #23	n/a	674	n/a	2211
59	Drift #24	n/a	668	n/a	2190
60	Drift #25	n/a	655	n/a	2150
61 [3]	Drift #26	583.366	583	1913.927	1914
62 [3]	Drift #27	485.213	485	1591.903	1591
		Total	19344		63462

NOTES: 1. Consistent with ULC (Reference 2.2.4)
2. Adjusted for 1.5 m offset (see Section 6.5.1)
3. Generated by MicroStation.

.

Table V-3 Panel 3

No.	Non-Emplacement Development	Meters		Feet	
		Distance	Rounded	Distance	Rounded
1[1]	North Construction Ramp	n/a	2884	n/a	9462
2	Access Main	2669.73	2670	8758.94	8759
3	Exhaust Main	6439.42	6439	21126.66	21127
4[1]	Exhaust Raise #2 Access Drift	n/a	127	n/a	417
5[1]	Exhaust Raise #2	n/a	279	n/a	915
6[1]	Intake Shaft #1 Access Drift	n/a	1384	n/a	2713
7[1]	Intake Shaft #1	n/a	378	n/a	1240
8[1]	Exhaust Shaft #1 Access Drift	n/a	598	n/a	1962
9[1]	Exhaust Shaft #1	n/a	405	n/a	1329
10[1]	Intake Shaft #2 Access Drift	n/a	770	n/a	2526
11[1]	Intake Shaft #2	n/a	350	n/a	1148
12[1]	Exhaust Shaft #2 Const. Access	n/a	31	n/a	102
13[1]	Exhaust Shaft #2 West Access	n/a	118	n/a	387
14[1]	Exhaust Shaft #2 East Access	n/a	106	n/a	348
15[1]	Exhaust Shaft #2	n/a	428	n/a	1404
16	Exhaust Raise #1 Access Drift	21.82	22	71.60	72
17	Access to EXRB Raise	30.27	30	99.32	99
18	Vent Raise to ECRB	28.96	29	95.00	95
19	ECRB Access to Raise	26.89	27	88.20	88
20	ECRB Widening	317.52	318	n/a	1042
WEST Turnout [2]					
21	West Turnout #1	n/a	118	n/a	387
22	West Turnout #2	n/a	118	n/a	387
23	West Turnout #3	n/a	118	n/a	387
24	West Turnout #4	n/a	118	n/a	387
25	West Turnout #5	n/a	118	n/a	387
26	West Turnout #6	n/a	118	n/a	387
27	West Turnout #7	n/a	118	n/a	387
28	West Turnout #8	n/a	118	n/a	387
29	West Turnout #9	n/a	114	n/a	374
30	West Turnout #10	92.160	92	n/a	304
31	West Turnout #11	93.160	93	n/a	305
32	West Turnout #12	93.160	93	n/a	305
33	West Turnout #13	93.160	93	n/a	305
34	West Turnout #14	93.160	93	n/a	305
35	West Turnout #15	93.160	93	n/a	305
36	West Turnout #16	93.160	93	n/a	305
37	West Turnout #17	93.160	93	n/a	305
38	West Turnout #18	93.160	93	n/a	305
39	West Turnout #19	93.160	93	n/a	305
40	West Turnout #20	93.160	93	n/a	305
41	West Turnout #21	93.160	93	n/a	305
42	West Turnout #22	93.160	93	n/a	305
43	West Turnout #23	93.160	93	n/a	305
44	West Turnout #24	93.160	93	n/a	305
45	West Turnout #25	93.160	93	n/a	305
46	West Turnout #26	93.160	93	n/a	305
		Total	2638		8654

(continued)

Table V-3. Panel 3 (Continuation)

No.	WEST Emplacement Drift [3]	Meters		Feet	
		Distance	Rounded	Distance	Rounded
47[1]	West Drift #1	n/a	617	n/a	2023
48[1]	West Drift #2	n/a	617	n/a	2023
49[1]	West Drift #3	n/a	617	n/a	2023
50[1]	West Drift #4	n/a	617	n/a	2023
51[1]	West Drift #5	n/a	617	n/a	2023
52[1]	West Drift #6	n/a	617	n/a	2023
53[1]	West Drift #7	n/a	617	n/a	2023
54[1]	West Drift #8	n/a	617	n/a	2023
55	West Drift #9	614.986	615	2017.667	2018
56	West Drift #10	598.937	599	1965.012	1965
57	West Drift #11	595.573	596	1953.976	1954
58	West Drift #12	595.573	596	1953.976	1954
59	West Drift #13	595.571	596	1953.969	1954
60	West Drift #14	595.571	596	1953.969	1954
61	West Drift #15	595.570	596	1953.966	1954
62	West Drift #16	595.571	596	1953.969	1954
63	West Drift #17	595.571	596	1953.969	1954
64	West Drift #18	595.571	596	1953.969	1954
65	West Drift #19	595.571	596	1953.969	1954
66	West Drift #20	595.571	596	1953.969	1954
67	West Drift #21	595.571	596	1953.969	1954
68	West Drift #22	595.571	596	1953.969	1954
69	West Drift #23	595.572	596	1953.972	1954
70	West Drift #24	595.571	596	1953.969	1954
71	West Drift #25	595.571	596	1953.969	1954
72	West Drift #26	595.571	596	1953.969	1954
		Total	15686		51431

No.	Turnout [2]	Meters		Feet	
		Distance	Rounded	Distance	Rounded
73	East Turnout #1	n/a	119	n/a	390
74	East Turnout #2	n/a	119	n/a	390
75	East Turnout #3	n/a	119	n/a	390
76	East Turnout #4	n/a	119	n/a	390
77	East Turnout #5	n/a	119	n/a	390
78	East Turnout #6	n/a	116	n/a	381
79	East Turnout #7	93.160	93	n/a	305
80	East Turnout #8	93.160	93	n/a	305
81	East Turnout #9	93.160	93	n/a	305
82	East Turnout #10	93.160	93	n/a	305
83	East Turnout #11	93.160	93	n/a	305
84	East Turnout #12	93.160	93	n/a	305
85	East Turnout #13	93.160	93	n/a	305
86	East Turnout #14	93.160	93	n/a	305
87	East Turnout #15	93.160	93	n/a	305
88	East Turnout #16	93.160	93	n/a	305
89	East Turnout #17	93.160	93	n/a	305
90	East Turnout #18	93.160	93	n/a	305
91	East Turnout #19	93.160	93	n/a	305
		Total	1920		6296

(Continued)

Table V-3. Panel 3 (Continuation)

No.	EAST Emplacement Drift [3]	Meters		Feet	
		Distance	Rounded	Distance	Rounded
92[1]	East Drift #1	n/a	757	n/a	2484
93[1]	East Drift #2	n/a	799	n/a	2621
94[1]	East Drift #3	n/a	808	n/a	2651
95[1]	East Drift #4	n/a	794	n/a	2605
96[1]	East Drift #5	n/a	787	n/a	2582
97	East Drift #6	776.367	776	2547.131	2547
98	East Drift #7	765.779	766	2512.393	2512
99	East Drift #8	740.438	740	2429.254	2429
100	East Drift #9	690.531	691	2265.517	2266
101	East Drift #10	640.625	641	2101.784	2102
102	East Drift #11	590.716	591	1938.041	1938
103	East Drift #12	540.810	541	1774.307	1774
104	East Drift #13	505.600	506	1658.789	1659
105	East Drift #14	492.075	492	1614.416	1614
106	East Drift #15	474.255	474	1555.952	1556
107	East Drift #16	458.581	459	1504.528	1505
108	East Drift #17	442.909	443	1453.111	1453
109	East Drift #18	427.237	427	1401.693	1402
110	East Drift #19	411.564	412	1350.273	1350
		Total	11904		39050

NOTES: 1. Consistent with ULC (Reference 2.2.4)
2. Adjusted for 1.5 m offset (see Section 6.5.1)
3. Generated by MicroStation

Table V-4. Panel 4

No.	Non-Emplacement Development	Meters		Feet	
		Distance	Rounded	Distance	Rounded
1	Intake Main	4834.77	4835	15862.07	15862
2 [1]	Panel 3 Exhaust Main Access	n/a	200	n/a	656
3	Exhaust Main (Dual)	1516.32	1516	4974.79	4975
Turnout [2]					
4	Turnout #1	n/a	119	n/a	390
5	Turnout #2	n/a	119	n/a	390
6	Turnout #3	n/a	119	n/a	390
7	Turnout #4	n/a	119	n/a	390
8	Turnout #5	n/a	119	n/a	390
9	Turnout #6	n/a	119	n/a	390
10	Turnout #7	n/a	119	n/a	390
11	Turnout #8	n/a	119	n/a	390
12	Turnout #9	n/a	99	n/a	324
13	Turnout #10	93.160	93	n/a	305
14	Turnout #11	93.160	93	n/a	305
15	Turnout #12	93.160	93	n/a	305
16	Turnout #13	93.160	93	n/a	305
17	Turnout #14	93.160	93	n/a	305
18	Turnout #15	93.160	93	n/a	305
19	Turnout #16	93.160	93	n/a	305
20	Turnout #17	93.160	93	n/a	305
21	Turnout #18	93.160	93	n/a	305
22	Turnout #19	93.160	93	n/a	305
23	Turnout #20	n/a	97	n/a	318
24	Turnout #21	n/a	102	n/a	335
25	Turnout #22	n/a	102	n/a	335
26	Turnout #23	n/a	102	n/a	335
27	Turnout #24	n/a	102	n/a	335
28	Turnout #25	n/a	102	n/a	335
29	Turnout #26	n/a	102	n/a	335
30 [3]	Turnout #27	n/a	102	n/a	335
31 [3]	Turnout #28	n/a	124	n/a	407
32 [3]	Turnout #29	n/a	154	n/a	505
33 [3]	Turnout #30	n/a	193	n/a	633
		Total	3263		10702

NOTES: 1. Consistent with ULC (Reference 2.2.4)
2. Adjusted for 1.5 m offset (see Section 6.5.1)
3. Generated by MicroStation and adjusted for 1.5 m offset

(Continued)

Table V-4. Panel 4 (Continuation)

No.	Emplacement Drift [1]	Meters		Feet	
		Distance	Rounded	Distance	Rounded
34	Drift #1	n/a	617	n/a	2023
35	Drift #2	n/a	617	n/a	2023
36	Drift #3	n/a	617	n/a	2023
37	Drift #4	n/a	617	n/a	2023
38	Drift #5	n/a	617	n/a	2023
39	Drift #6	n/a	617	n/a	2023
40	Drift #7	n/a	617	n/a	2023
41	Drift #8	n/a	617	n/a	2023
42	Drift #9	n/a	634	n/a	2082
43	Drift #10	n/a	605	n/a	1986
44	Drift #11	n/a	605	n/a	1986
45	Drift #12	n/a	605	n/a	1986
46	Drift #13	n/a	605	n/a	1986
47	Drift #14	n/a	605	n/a	1986
48	Drift #15	n/a	605	n/a	1986
49	Drift #16	n/a	605	n/a	1986
50	Drift #17	n/a	605	n/a	1986
51	Drift #18	n/a	605	n/a	1986
52	Drift #19	n/a	605	n/a	1986
53	Drift #20	n/a	605	n/a	1985
54	Drift #21	n/a	594	n/a	1947
55 [2]	Drift #22	581.129	581	1906.581	1907
56 [2]	Drift #23	568.736	569	1865.921	1866
57 [2]	Drift #24	556.344	556	1825.262	1825
58 [2]	Drift #25	543.951	544	1784.606	1785
59 [2]	Drift #26	531.559	532	1743.943	1744
60 [2]	Drift #27	543.790	544	1784.084	1784
61 [2]	Drift #28	517.110	517	1696.552	1697
62 [2]	Drift #29	462.114	462	1516.119	1516
63 [2]	Drift #30	366.214	366	1201.487	1201
		Total	17490		57383

NOTES: 1. Consistent with ULC (Reference 2.2.4).
2. Generated by MicroStation.

Table V-5. Turnout and Emplacement Drift Excavation Summary

Panel	Turnout		Emplacement Drift	
	Meters (rounded)	**Feet (rounded)**	**Meters (rounded)**	**Feet (rounded)**
1	558	1830	3491	11455
2	2575	8419	19344	63462
3 West	2638	8654	15686	51431
3 East	1920	6296	11904	39050
4	3263	10702	17490	57383
Total	10954	35901	67915	222781

ATTACHMENT VI
VERIFICATION OF WASTE PACKAGE ENDPOINT COORDINATES BY AN ALTERNATIVE METHOD

Calculations and Analyses EG-PRO-3DP-G04B-00037 allows the checker the option to verify the calculation by an alternative method. The following documentation provides an alternate method to check the MicroStation (refer to Section 4.2.2) output contained in this document.

Note: In compliance with EG-PRO-3DP-G04B-00037 (Reference 2.1.1, Section 3.6.2), WPEC in the horizontal plane are not required to be re-verified since the WPEC in the horizontal plane do not change from the initial issue of the ULCLA with the inclusion of the current turnout design. Therefore, the initial issue version of the verification is carried forward in this revision.

ALTERNATE ENDPOINT CALCULATION EXPLANATION

A. Process of developing the waste package endpoints found in the Underground Layout Configuration for LA (ULCLA)

The co-ordinates of the end points of the waste package presented in the Underground Layout Configuration for LA (ULC) (800-KMC-SS00-00200-000-00Aa), Table III entitled Primary Area Bounding Endpoint Coordinates, panels 1,2,3 and 4 were determined using Vulcan software. A DXF file was exported from the Vulcan software so that it could be read using Microsataion Software. Changes were made to the layout using Microstation and the resulting waste package endpoints are presented in Tables 10, 11,12, 13 and 14 of the Underground Layout Configuration for LA (ULCLA) (800-KMC-SS00-00200-000-00Aa).

B. Method of validating the waste package endpoints found in the ULCLA

The purpose the attached information is to determine if the endpoints of waste packages plotted by Microstation are valid. The validation was performed by making an alternate calculation to determine the endpoint coordinates. In some cases, the new points were validated by plotting the new locations by hand to determine if they were actually located on the drift plot of the ULCLA layout.

The alternate calculation steps are as follows:

1. Import the co-ordinates for waste package endpoints from the ULCLA as found in the CDIS into an Excel spreadsheet.
2. Import the co-ordinates for waste package endpoints from the ULC into the same Excel spreadsheet.
3. Arrange the co-ordinates on the spreadsheet to enable a side by side comparison of the co-ordinate values.
4. Subtract the co-ordinate values.

- If the difference in value between the co-ordinates is zero (+/- .001) and if no layout change was made as determined by inspecting the two layouts, then the correct or valid points were reported and plotted by Microstation. If the value between the co-ordinates is zero (+/- .001) and a change was intended, then the new points are not valid.
- If the difference in value between the co-ordinates is greater than zero (+/- .001) and less than 1 meter, a change may have been made but the co-ordinates reported are valid because the change is less that the tolerance required by Science.
- If the difference in value between the co-ordinates is greater than 1 meter and a change was intended, then calculate the new co-ordinate.
- Sample calculations are shown on Sheets 1 through 6.
  - Sheet 1 is a calculation of the change (delta) in elevation per emplacement drift. The calculation is based on the geometry of the repository. All of the emplacement drifts are located on a plane that strikes parallel to the emplacement drifts (azimuth 252 degrees clockwise from north) and dips uniformly at an azimuth of 342 degrees. The change in elevation per emplacement drift (81 meters on dip) is the total difference in elevation divided by the number of emplacement drifts or 1.171344828 meters per drift. The number is used to calculate the elevation of the two new drifts added to Panel 1.
  - Sheet 2 is the calculation of the change (delta) in both the easting and northing of the waste package endpoints that occurs when the access main is shifted 80 feet (24.384 meters). The access main shift is perpendicular to the azimuth (3 degrees clockwise from north) of the access main. This shift is then translated along the emplacement drift (azimuth 252 degrees clockwise from north). Since the change in waste package co-

TL 7/16/07

ordinates occurs along the emplacement drift that is parallel to the strike of the plane, no change in elevation of the ends of the waste packages occurs. Using the values calculated works as long as the azimuth of the access main and exhaust main is 3 degrees. When the azimuth changes, the calculation is more complex because of the curves involved. To verify the new location of waste packages in areas where the azimuth of the access main (or exhaust main) is changing, the new location was plotted using a scale to verify that it did fall on the emplacement drift at the required off set.

- Sheet 3, steps 1 and 2 show a calculation to determine the change (delta) in northing and easting of that occurs between emplacement drifts when the azimuth of the access main is 3 degrees clockwise from north and the emplacement drift azimuth is 252 degrees clockwise from north. Step 3 shows how the change is used to calculate the new endpoints for the east side of drifts 4-22 and 4-23
- Sheet 4 is a sample calculation that applies to drifts 3-23, 3-24, 3-25, and 3-26. New endpoints are calculated using the shift in northing and easting established on Sheet 3.

  Sheet 4 also shows the calculation for the endpoints of waste packages in drift 1-1. In this case, the calculated endpoint did not match the ULCLA endpoint. Inspection of the plot shows that the waste package endpoint was moved with respect to the end of the exhaust drift curve. The point plots on the centerline of drift 1-1. Because the exhaust main is an extension of the emplacement drift there is no actual intersection. With no intersection, there is no impact on the space available for the condensation chamber and the point as plotted is not a problem
- Sheet 5 shows the plot of the endpoints of waste packages that plotted to verify their location.
- Sheet 6 shows that the exhaust main as plotted in the ULC was changed when plotted for the ULCLA. The location of the endpoint in drift 3-14 was changed. However, the endpoint was not changed for 3-15 and 1-16. As a result, the waste package endpoint standoff exceeds the 15 meter requirement. There is no impact because the 15 meter standoff is a minimum value.

- If the difference between the newly calculated co-ordinates and the ULCLA co-ordinates is zero (+/- .001), then the points reported by Microstation are valid. If the new coordinates are not calculated, plot the new co-ordinates on the layout to determine if they are located on the emplacement drift. If they are located on the emplcement drift, valid points were reported and plotted by Microstation.

Elevations - the elevation of the waste packages does not change because all of the co-ordinate shifts are on the strike of the plane. The exception is the two new drifts in Panel 1. These drifts are parallel to, in the same plane as all of the other emplacement drifts and are at the same 81 meter spacing as off of the other emplacement drifts. As a result the elevation of these drifts can be established based on the number of drift intervals they are away from an emplacement drift with known endpoints.

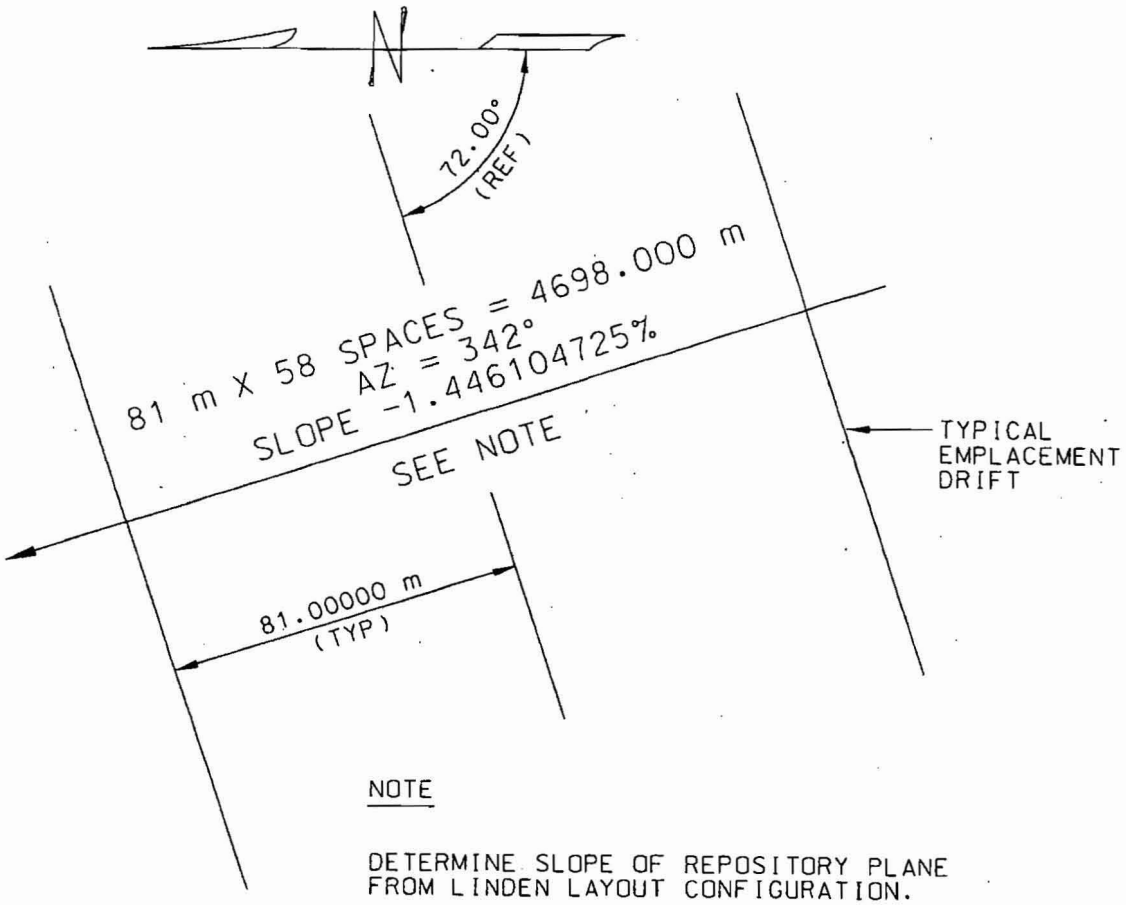

NOTE

DETERMINE SLOPE OF REPOSITORY PLANE
FROM LINDEN LAYOUT CONFIGURATION.

VERTICAL DISTANCE:

HIGHEST DRIFT IS AT EL 1106.760 m.
LOWEST DRIFT IS AT EL 1038.822 m.
TOTAL CHANGE FROM HIGHEST TO
LOWEST = 67.938 m.

HORIZONTAL DISTANCE:

TOTAL OF 58 SPACES @ 81 m = 4698.000 m.

THEREFORE THE SLOPE OF REPOSITORY PLANE

= 67.938/4698 X 100 = 1.446104725%.
(0.828499226°)

DETERMINE ELEVATION CHANGE BETWEEN ADJACENT DRIFTS.

= 81 m X 1.446104725 / 100 = 1.171344828 m.

PLAN

SCALE: NONE

CAD FILE: 800kmkssd010542.skt

YMP TECHNICAL TRIVIA

REPOSITORY
AZIMUTH AND SLOPE

VI-5

Underground Layout Configuration for LA
800-KMC-SS00-00200-000-00A B TL 7/27/07

Calculation of the change in northing and the change in easting of the waste package endpoint caused by the 80 foot offset is shown below.

$\cos 21° = \frac{80}{L}$ ∴ $L = 85.6916$ ft = the distance that the waste package moved

$85.6916 \times \frac{1200}{3937} = 26.11885$ m

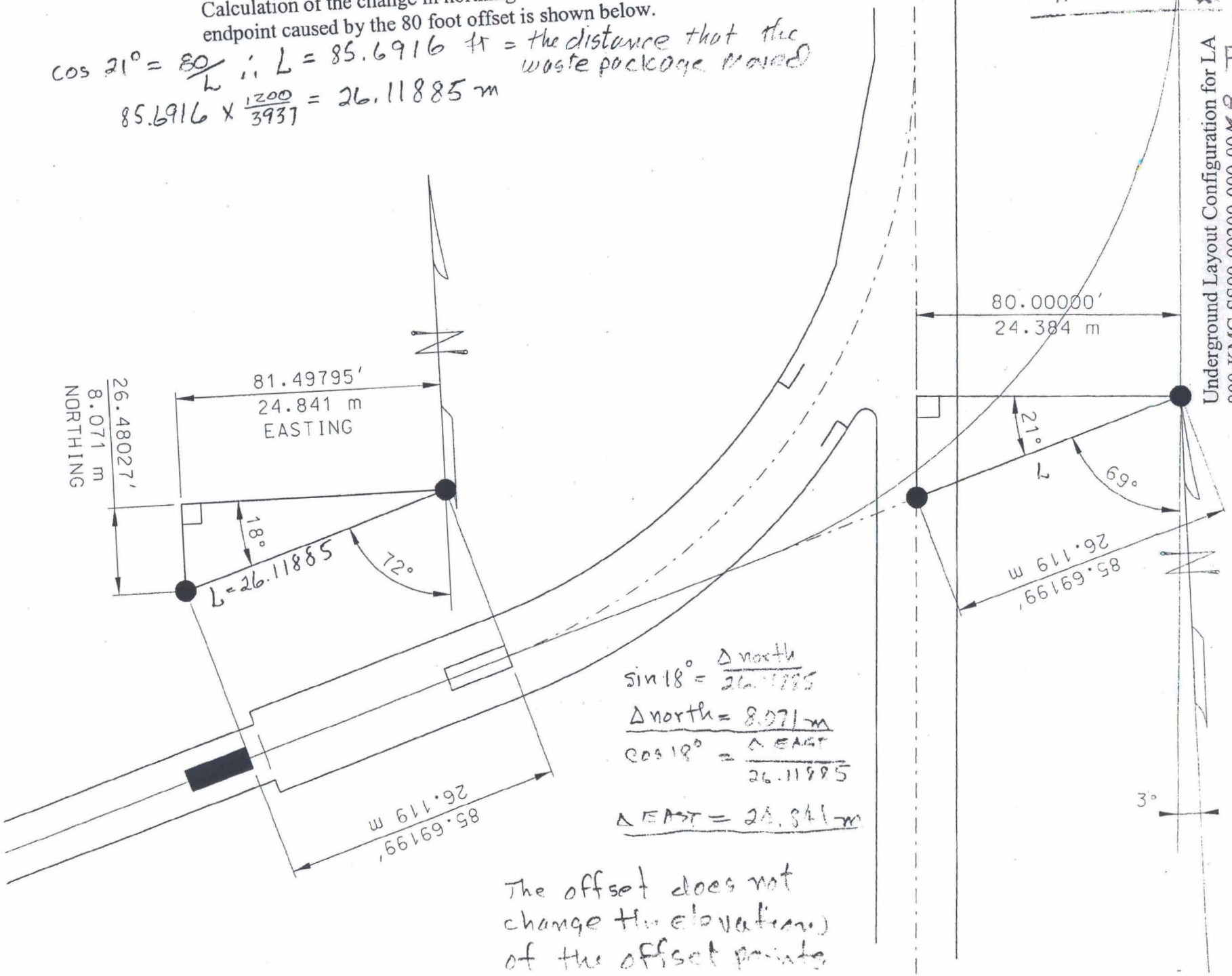

$\sin 18° = \frac{\Delta \text{north}}{26.11885}$

$\Delta \text{north} = 8.071$ m

$\cos 18° = \frac{\Delta \text{EAST}}{26.11885}$

$\Delta \text{EAST} = 24.841$ m

The offset does not change the elevations of the offset points

VI-6

YUCCA MOUNTAIN SITE CHARACTERIZATION PROJECT
Civilian Radioactive Waste Management System
Management & Operating Contractor
CONTRACT NO. DE-AC01-91RW00134
SUBJECT:

PAGE NO. ___ OF ___

WBS NO: 1.2.6.
DATE: ___-___-___ REV NO:
CALC NO:
ORIGINATOR:
CHECKED BY:
CHECKED DATE:

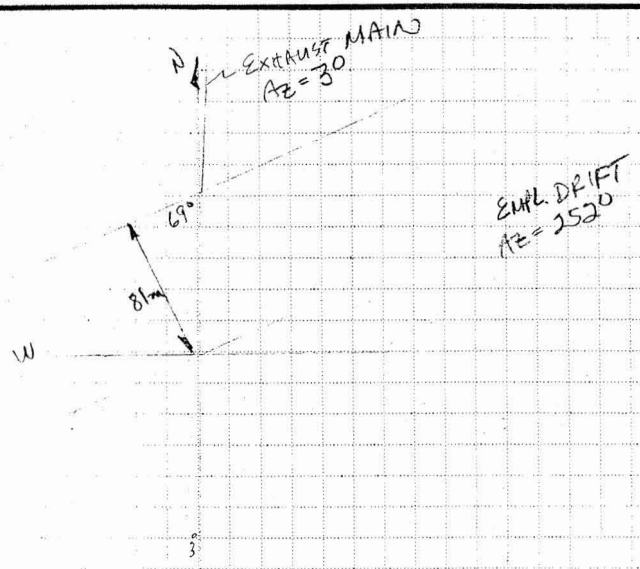

3- Calculate Co-ords of new endpoints for ULCLA drift 4-22 (west side)

	DRIFT	NORTHING	EASTING	ELEV
ULC	4-21	234202.0360	170639.888	1062.2480
Δ		− 86.6938	− 4.541	+ 1.1713
CALC FOR 4-22		234115.3922	170635.347	1063.4193
Plotted Value		234115.392	170635.348	1063.4193
DIFF BTWN CALC & plotted value		.000	.001	0

4- Calculate Co-ords of new endpoints for ULCLA drift 4-23 (west side)

4-22 Calculated	234115.3922	170635.347	1063.4193
Δ	− 86.6438	− 4.541	+ 1.1713
4-23 Calculated	234028.7484	170630.806	1064.5906
Plotted Value	234028.748	170630.807	1064.5906
DIFF BTWN CALC & plotted	0.0	0.0	0.0

1- Calculate dist btwn drifts along EXHAUST MAIN

$\sin 69° = 81/L \therefore L = 86.76274$

2- Calculate ΔN & ΔE Per Emplacement drift

$\cos 3° = \frac{\Delta N}{86.76274} \therefore \Delta N = 86.64383$

$\sin 3° = \frac{\Delta E}{86.76274} \therefore \Delta E = 4.54081$

Underground Layout Configuration for LA
800-KMC-SS00-00200-000-00~~A~~ B

~~TL 7/16/07~~ TL 7/27/07

YUCCA MOUNTAIN SITE CHARACTERIZATION PROJECT
Civilian Radioactive Waste Management System
Management & Operating Contractor

CONTRACT NO. DE-AC01-91RW00134

SUBJECT:

PAGE NO. ___ OF ___

WBS NO: 1.2.6.
DATE: ___-___-___ REV NO:
CALC NO:
ORIGINATOR:
CHECKED BY:
CHECKED DATE:

PANEL 1 & DRIFTS 3-23W through 3-26W

- THE POSITION OF THE WEST END OF DRIFT 3-22W IS THE SAME IN BOTH UCL & UCLA Layouts. THE Δ NORTHING & Δ EASTING BETWEEN DRIFTS 3-22, 3-23, 3-24, 3-25 & 3-26 IS THE SAME AS SHOWN ON SHEET 7

Calculate new W.P. end points

	NORTHING	EASTING
3-22W - West END	234132.276	170687.310
Δ NORTHING & EASTING	-86.6438	-4.541
UCLA Points 3-23W	234045.632	170,682.769
Plotted Co-ordinates	234045.632	170.682.769
DIFF. BTWN CALC & Plotted points	0.0	0.0

- The POSITION OF THE WEST END OF DRIFT 1-1 is the same as the west end of drift 1-1 the OLD LAYOUT EXCEPT IT IS SHIFTED 4 drifts SOUTH.

CALCULATE THE NEW W.P. END POINTS FOR DRIFT 1-1 (WEST END)

	NORTHING	EASTING
UCL 1-1	234085.101	170801.246
Δ NORTHING & EASTING	4x 86.6438	4(4.54081)
Calculated Coordinates	233738.5258	170786.0828
Plotted Coordinates	233734.401	170773.388
DIFF. BTWN CALC & plotted co-ords.	4.125 m	12.695

THE DIFFERENCE BETWEEN THE CALCULATED & THE PLOTTED CO-ORDINATES SHOWS THAT THE POSITION OF THE WASTE PACKAGE with respect to the point of curvature was changed.

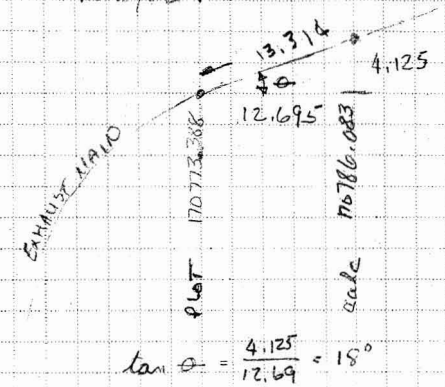

$\tan\theta = \frac{4.125}{12.69} = 18°$

NOTE: The calculation shows that the WASTE PACKAGE moved 13.314 m south west along the emplacement drift. This is acceptable because the exhaust main does not intersect the panel 1 drift. Actually, the exhaust main is a continuation of the emplacement drift. Therefore, the 15 m offset does not apply.

Underground Layout Configuration for LA
800-KMC-SS00-00200-000-00~~A~~ B

~~TL 7/16/07~~ TL 7/27/07

SHEET 4

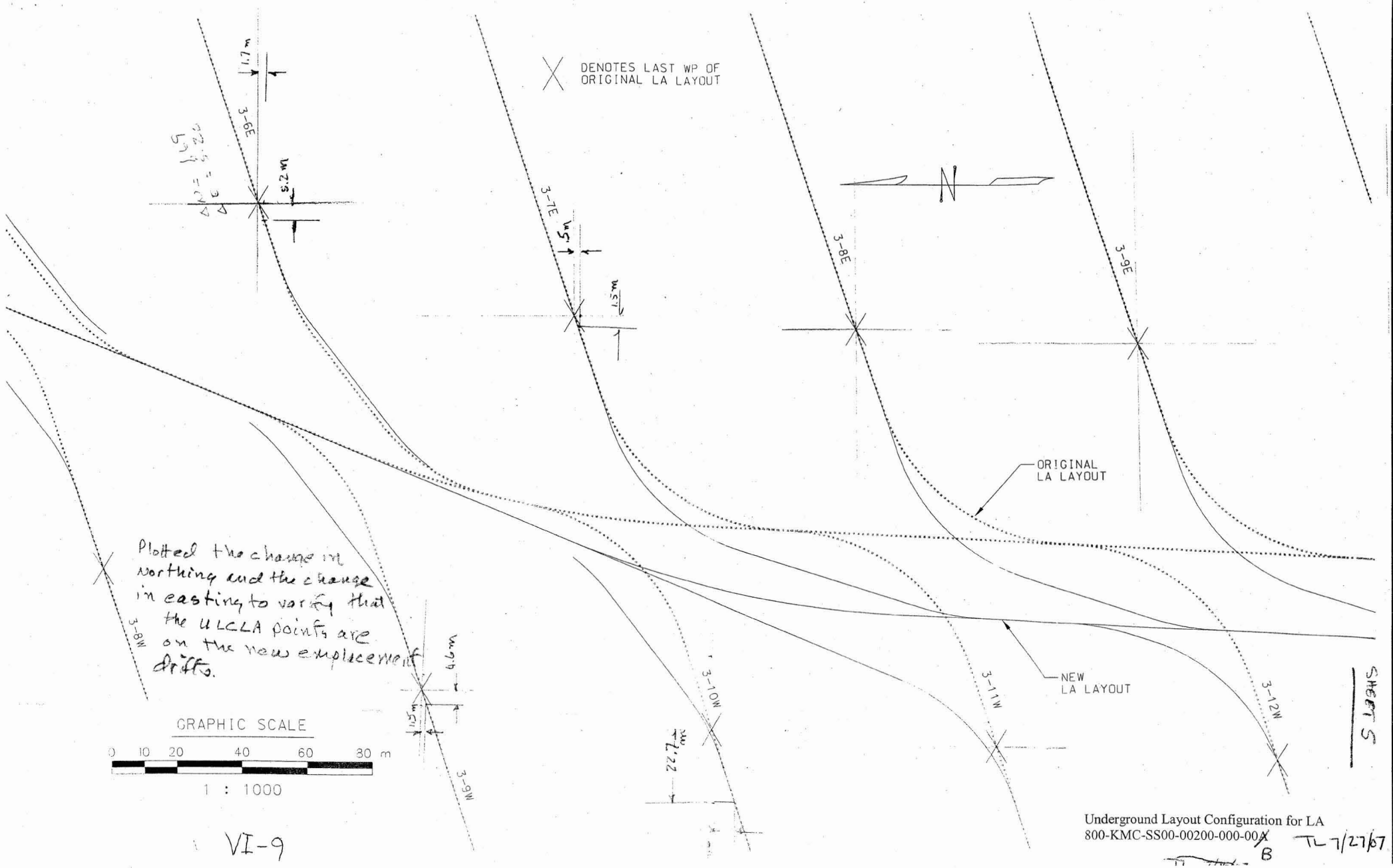

SHEET 5

Underground Layout Configuration for LA
800-KMC-SS00-00200-000-00~~A~~ B

TL 7/27/07

VI-9

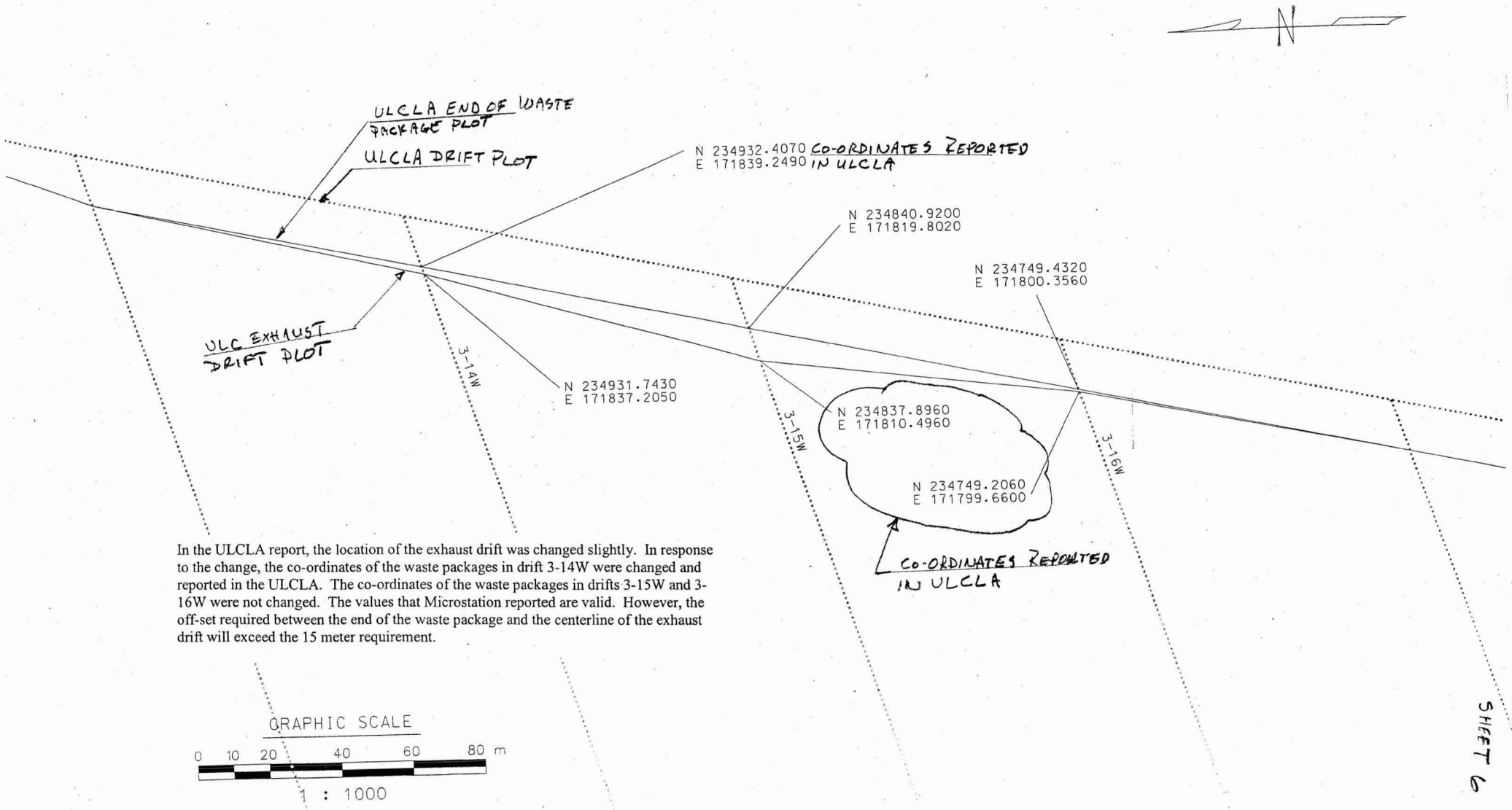

In the ULCLA report, the location of the exhaust drift was changed slightly. In response to the change, the co-ordinates of the waste packages in drift 3-14W were changed and reported in the ULCLA. The co-ordinates of the waste packages in drifts 3-15W and 3-16W were not changed. The values that Microstation reported are valid. However, the off-set required between the end of the waste package and the centerline of the exhaust drift will exceed the 15 meter requirement.

SHEET 6

Underground Layout Configuration for LA
800-KMC-SS00-00200-000-00~~A~~ B TL 7/27/07
~~TL 7/16/07~~

EXCEL SPREADSHEET -
ALTERNATIVE
ENDPOINT CALCULATION SUMMAR Y

CHANGE IN ELEVATION PER EMPLACEMENT SPACE (81 m)	1.1713	m	See sheet 1
CHANGE IN THE NORTHING PER EMPLACEMENT SPACE (81 m)	86.6438	m	See sheet 3
CHANGE IN THE EASTING PER EMPLACEMENT SPACE (81 m)	4.54081	m	See sheet 3
CHANGE IN NORTHING CAUSED BY 80 FOOT OFFSET	8.071	m	See sheet 2
CHANGE IN EASTING CAUSED BY 80 FOOT OFFSET	24.841	m	See sheet 2

From Table III. Primary Area Bounding Endpoint Coordinates, Panels 1,2,3 and 4
Underground Layoug Configuration (800-P0C-MGR0-00100-000-00E)

From Table 10 - Panel 1 Underground Layout Configuration for LA (800-KMC-SS00-00200-000-00Aa

Label	Northing meters	Easting meters	Elevation meters	Panel	Drift	Zone	Label	Northing meters	Easting meters	Side of Drift	Elevation meters	Delta Northing meters (ULCLA - ULC)	Delta Easting meters (ULCLA - ULC)	Delta Elevation meters (ULCLA - ULC)	Change Intended (Delta North Delta East only)	Calculated NORTHING meters	Calculated EASTING meters	Calculated Elevation meters	New Delta Northing meters (Calc - ULCLA)	New Delta Easting meters (Calc - ULC)	Delta Elev meters (Calc - ULC)	Remark
3-22W	234132.276	170687.310	1063.419	3	22	West	3-22W	234132.276	170687.310	West	1063.419	0.000	0.000	0.000	No	NO CHANGE	NO CHANGE			0.000	0.000	
Panel 1-1	234232.646	171258.340	1064.59	1	1	East	3-23W	234224.575	171233.499	East	1064.590	-8.071	-24.841	0.000	Yes	234224.575	171233.499	1064.5908	0.000	0.000	0.001	
	234085.101	170804.246	1064.59	1	1	West		234045.632	170682.769	West		-39.469	-121.477		Yes	234045.6322	170682.769		0.000	0.000		
Panel 1-2	234146	171253.799	1065.762	1	2	East	3-24W	234137.931	171228.958	East	1065.761	-8.069	-24.841	-0.001	Yes	234137.929	171228.958	1065.7621	-0.002	0.001	0.001	
	233966.91	170702.613	1065.762	1	2	West		233958.988	170678.228	West		-7.922	-24.384		Yes	233958.9884	170678.228		0.000	0.001		
Panel 1-3	234059.357	171249.258	1066.933	1	3	East	3-25W	234051.285	171224.417	East	1066.933	-8.072	-24.841	0.000	Yes	234051.286	171224.417	1066.9334	0.001	0.000	0.000	
	233879.956	170697.118	1066.933	1	3	West		233872.342	170673.688	West		-7.614	-23.430		Yes	233872.3446	170673.688		0.003	0.000		
Panel 1-4	233972.714	171244.717	1068.105	1	4	East	3-26W	233964.640	171219.877	East	1068.104	-8.074	-24.840	-0.001	Yes	233964.643	171219.876	1068.1047	0.003	0.001	0.001	
	233793.312	170692.577	1068.105	1	4	West		233785.698	170669.147	West		-7.614	-23.430		Yes	233785.7008	170669.147		0.003	0.000		
Panel 1-5	233886.07	171240.176	1069.276	1	5	East	PANEL 1 -1	233886.070	171240.176	East	1069.276	0.000	0.000	0.000	No	NO CHANGE	NO CHANGE	1069.276				
	233708.625	170694.060	1069.276	1	5	West		233734.401	170773.388	West	1069.276	25.776	79.328		Yes	233738.5258	170786.0828		4.125	-12.695		See sheet 4
Panel 1-6	233799.426	171235.636	1070.447	1	6	East	PANEL 1-2	233799.426	171235.636	East	1070.447	0.000	0.000	0.000	No	NO CHANGE	NO CHANGE	1070.4473	0.000	0.000	0.000	
	233636.504	170734.215	1070.447	1	6	West		233620.394	170684.634	West	1070.447	-16.110	-49.581		Yes	233620.0246	170683.4956		-0.369	1.138		See sheet 4
Panel 1-7	233712.783	171231.095	1071.618	1	7	East	PANEL 1-3	233712.783	171231.095	East	1071.618	0.000	0.000	0.000	No	NO CHANGE	NO CHANGE	1071.6186			0.001	
	233578.451	170817.667	1071.618	1	7	West		233533.381	170678.955	West	1071.618	-45.070	-138.712		Yes	233533.3808	170678.9548		0.000	0.000		
Panel 1-8	233626.138	171226.554	1072.79	1	8	East	PANEL 1-4	233626.138	171226.554	East	1072.790	0.000	0.000	0.000	No	NO CHANGE	NO CHANGE	1072.7899			0.000	
	233521.685	170905.080	1072.79	1	8	West		233446.736	170674.414	West	1072.790	-74.949	-230.666		Yes	233446.737	170674.414		0.001	0.000		
NEW DRIFT - NOT IN THE ULC. CO-ORDINATES ARE CALCULATED							PANEL 1-5	233539.494	171222.014	East	1073.961	New Drift		1073.961	N/A	233539.4954	171222.0134	1073.9612	0.001	0.001	0.000	
								233360.092	170669.874	West		New Drift			N/A	233360.0932	170669.8731		0.001	0.001		
NEW DRIFT - NOT IN THE ULC. CO-ORDINATES ARE CALCULATED							PANEL 1-6	233452.851	171217.473	East	1075.132	New Drift		1075.132	N/A	233452.8504	171217.4726	1075.1325	-0.001	0.000	0.000	
								233273.449	170665.333	West		New Drift			N/A	233273.4494	170665.3323		0.000	0.001		

From Table III. Primary Area Bounding Endpoint Coordinates, Panels 1,2,3 and 4
Underground Layoug Configuration (800-P0C-MGR0-00100-000-00E)

From Table 12 - Panel 3 Underground Layout Configuration for LA (800-KMC-SS00-00200-000-00Aa

Label	Northing meters	Easting meters	Elevation meters	Panel	Drift	Zone	Label	Northing meters	Easting meters	Side of Drift	Elevation meters	Delta Northing meters (ULCLA - ULC)	Delta Easting meters (ULCLA - ULC)	Delta Elevation meters (ULCLA - ULC)	Change Intended (Delta North Delta East only)	Calculated NORTHING meters	Calculated EASTING meters	Delta Northing meters Check Sum	Delta Easting meters Check Sum	Delta Elev meters Check Sum	Remark
3- 1E	235992.979	171695.756	1042.336	3	1	East	3-1E	235992.979	171695.756	West	1042.336	0.000	0.000	0.000	No	NO CHANGE	NO CHANGE				
	236137.403	172140.248	1042.336	3	1	East		236137.403	172140.248	East		0.000	0.000		No	NO CHANGE	NO CHANGE				
3- 2E	235894.184	171653.82	1043.507	3	2	East	3-2E	235894.184	171653.820	West	1043.507	0.000	0.000	0.000	No	NO CHANGE	NO CHANGE				
	236081.661	172230.815	1043.507	3	2	East		236081.661	172230.815	East		0.000	0.000		No	NO CHANGE	NO CHANGE				
3- 3E	235795.39	171611.884	1044.678	3	3	East	3-3E	235795.390	171611.884	West	1044.678	0.000	0.000	0.000	No	NO CHANGE	NO CHANGE				
	236012.902	172281.32	1044.678	3	3	East		236012.902	172281.320	East		0.000	0.000		No	NO CHANGE	NO CHANGE				
3- 4E	235696.595	171569.949	1045.85	3	4	East	3-4E	235696.595	171569.949	West	1045.850	0.000	0.000	0.000	No	NO CHANGE	NO CHANGE				
	235936.845	172309.363	1045.85	3	4	East		235936.845	172309.363	East		0.000	0.000		No	NO CHANGE	NO CHANGE				
3- 5E	235597.8	171528.013	1047.021	3	5	East	3-5E	235597.800	171528.013	West	1047.021	0.000	0.000	0.000	No	NO CHANGE	NO CHANGE				
	235835.884	172260.76	1047.021	3	5	East		235835.884	172260.760	East		0.000	0.000		No	NO CHANGE	NO CHANGE				
3- 6E	235497.316	171480.877	1048.192	3	6	East	3-6E	235499.006	171480.077	West	1048.192	1.690	5.200	0.000	Yes			1.690	5.200	0.000	See sheet 5 - plotted points to verify
	235733.817	172208.754	1048.192	3	6	East		235733.817	172208.754	East		0.000	0.000		No	NO CHANGE	NO CHANGE				
3- 7E	235400.691	171445.610	1049.363	3	7	East	3-7E	235400.211	171444.142	West	1049.363	-0.480	-1.476	0.000	Yes			-0.480	-1.476	0.000	See sheet 5 - plotted points to verify
	235631.751	172156.749	1049.363	3	7	East		235631.751	172156.749	East		0.000	0.000		No	NO CHANGE	NO CHANGE				
3- 8E	235314.047	171441.077	1050.535	3	8	East	3-8E	235305.976	171416.236	West	1050.535	-8.071	-24.841	0.000	Yes	235305.976	171416.236	0.000	0.000	0.000	
	235529.684	172104.743	1050.535	3	8	East		235529.684	172104.743	East		0.000	0.000		No	NO CHANGE	NO CHANGE				
3- 9E	235227.403	171436.537	1051.706	3	9	East	3-9E	235219.332	171411.696	West	1051.706	-8.071	-24.841	0.000	Yes	235219.332	171411.696	0.000	0.000	0.000	
	235427.618	172052.738	1051.706	3	9	East	3-9E	235427.618	172052.738	East		0.000	0.000		No	NO CHANGE	NO CHANGE				
3- 10E	235140.759	171431.996	1052.877	3	10	East	3-10E	235132.688	171407.155	West	1052.877	-8.071	-24.841	0.000	Yes	235132.688	171407.155	0.000	0.000	0.000	
	235325.552	172000.733	1052.877	3	10	East	3-10E	235325.552	172000.733	East		0.000	0.000		No	NO CHANGE	NO CHANGE				
3- 11E	235054.115	171427.455	1054.049	3	11	East	3-11E	235046.044	171402.614	West	1054.049	-8.071	-24.841	0.000	Yes	235046.044	171402.614	0.000	0.000	0.000	
	235223.485	171948.727	1054.049	3	11	East	3-11E	235223.485	171948.727	East		0.000	0.000		No	NO CHANGE	NO CHANGE				

Underground Layout Configuration for LA
800-KMC-SS00-00200-000-00A B
TL 7/21/07
~~TL 7/16/07~~

VI-11

EXCEL SPREADSHEET -
ALTERNATIVE
ENDPOINT CALCULATION SUMMAR Y

From Table III. Primary Area Bounding Endpoint Coordinates, Panels 1,2,3 and 4
Underground Layoug Configuration (800-P0C-MGR0-00100-000-00E)

From Table 12 - Panel 3East Underground Layout Configuration for LA (800-KMC-SS00-00200-000-00Aa

Label	Northing meters	Easting meters	Elevation meters	Panel	Drift	Zone	Label	Northing meters	Easting meters	Side of Drift	Elevation meters	Delta Northing meters (ULCLA - ULC)	Delta Easting meters (ULCLA - ULC)	Delta Elevation meters (ULCLA - ULC)	Change Intended (Delta North Delta East only)	Calculated NORTHING meters	Calculated EASTING meters	Delta Northing meters Check Sum	Delta Easting meters Check Sum	Delta Elev meters Check Sum	
3- 12E	234967.47	171422.914	1055.22	3	12	East		234959.399	171398.074	West		-8.071	-24.840		Yes	234959.399	171398.073	0.000	0.001		
	235121.419	171896.722	1055.22	3	12	East	3-12E	235121.419	171896.722	East	1055.220	0.000	0.000	0.000	No	NO CHANGE	NO CHANGE				
3- 13E	234869.826	171418.373	1056.391	3	13	East		234872.755	171393.533	West		-8.071	-24.840		Yes	234872.755	171393.532	0.000	0.001		
	235023.895	171858.695	1056.391	3	13	East	3-13E	235023.895	171858.695	East	1056.391	0.000	0.000	0.000	No	NO CHANGE	NO CHANGE				
3- 14E	234794.182	171413.833	1057.563	3	14	East		234786.111	171388.992	West		-8.071	-24.841		Yes	234786.111	171388.992	0.000	0.000		
	234931.743	171837.205	1057.563	3	14	East	3-14E	234932.407	171839.249	East	1057.563	0.664	2.044	0.000	no	NO CHANGE	NO CHANGE	0.664	2.044	0.000	See sheet 6
3- 15E	234707.537	171409.292	1058.734	3	15	East		234699.466	171384.451	West		-8.071	-24.841		Yes	234699.466	171384.451	0.000	0.000		
	234837.896	171810.496	1058.734	3	15	East	3-15E	234837.896	171810.496	East	1058.734	0.000	0.000	0.000	No	NO CHANGE	NO CHANGE				
3- 16E	234620.693	171404.751	1059.905	3	16	East		234612.622	171379.911	West		-8.071	-24.840		Yes	234612.622	171379.91	0.000	0.001		See sheet 6
	234749.206	171799.66	1059.905	3	16	East	3-16E	234749.206	171799.660	East	1059.905	0.000	0.000	0.000	No	NO CHANGE	NO CHANGE				
3- 17E	234534.249	171400.21	1061.077	3	17	East		234526.178	171375.370	West		-8.071	-24.840		Yes	234526.178	171375.369	0.000	0.001		See sheet 6
	234657.945	171780.909	1061.077	3	17	East	3-17E	234657.945	171780.909	East	1061.077	0.000	0.000	0.000	No	NO CHANGE	NO CHANGE				
3- 18E	234447.604	171395.67	1062.248	3	18	East		234439.533	171370.829	West		-8.071	-24.841		Yes	234439.533	171370.829	0.000	0.000		
	234566.457	171761.463	1062.248	3	18	East	3-18E	234566.457	171761.463	East	1062.248	0.000	0.000	0.000	No	NO CHANGE	NO CHANGE				
3- 19E	234360.98	171391.129	1063.419	3	19	East		234352.889	171366.288	West		-8.071	-24.841		Yes	234352.889	171366.288	0.000	0.000		
	234474.97	171742.017	1063.419	3	19	East	3-19E	234474.970	171742.017	East	1063.419	0.000	0.000	0.000	No	NO CHANGE	NO CHANGE				

From Table III. Primary Area Bounding Endpoint Coordinates, Panels 1,2,3 and 4
Underground Layoug Configuration (800-P0C-MGR0-00100-000-00E)

From Table 13 panel 3 West Underground Layout Configuration for LA (800-KMC-SS00-00200-000-00Aa

Label	Northing meters	Easting meters	Elevation meters	Panel	Drift	Zone	Label	Northing meters	Easting meters	Side of Drift	Elevation meters	Delta Northing meters (ULCLA - ULC)	Delta Easting meters (ULCLA - ULC)	Delta Elevation meters (ULCLA - ULC)	Change Intended (Delta North Delta East only)	Calculated NORTHING meters	Calculated EASTING meters	Delta Northing meters Check Sum	Delta Easting meters Check Sum	Delta Elev meters Check Sum	
3- 1W	236237.413	171661.675	1038.822	3	1	West	3-1W	236237.413	171661.675	East	1038.822	0.000	0.000	0.000	Yes	NO CHANGE	NO CHANGE				
	236052.003	171091.041	1038.822	3	1	West		236052.003	171091.041	West		0.000	0.000		Yes	NO CHANGE	NO CHANGE				
3- 2W	236138.618	171619.739	1039.993	3	2	West	3-2W	236138.618	171619.739	East	1039.993	0.000	0.000	0.000	Yes	NO CHANGE	NO CHANGE				
	235953.208	171049.105	1039.993	3	2	West		235953.208	171049.105	West		0.000	0.000		Yes	NO CHANGE	NO CHANGE				
3- 3W	236039.823	171577.803	1041.164	3	3	West	3-3W	236039.823	171577.803	East	1041.164	0.000	0.000	0.000	Yes	NO CHANGE	NO CHANGE				
	235854.413	171007.169	1041.164	3	3	West		235854.413	171007.169	West		0.000	0.000		Yes	NO CHANGE	NO CHANGE				
3- 4W	235941.028	171535.867	1042.336	3	4	West	3-4W	235941.028	171535.867	East	1042.336	0.000	0.000	0.000	Yes	NO CHANGE	NO CHANGE				
	235755.618	170965.233	1042.336	3	4	West		235755.618	170965.233	West		0.000	0.000		Yes	NO CHANGE	NO CHANGE				
3- 5W	235842.233	171493.931	1043.507	3	5	West	3-5W	235842.233	171493.931	East	1043.507	0.000	0.000	0.000	Yes	NO CHANGE	NO CHANGE				
	235656.823	170923.297	1043.507	3	5	West		235656.823	170923.297	West		0.000	0.000		Yes	NO CHANGE	NO CHANGE				
3- 6W	235743.438	171451.995	1044.678	3	6	West	3-6W	235743.438	171451.995	East	1044.678	0.000	0.000	0.000	Yes	NO CHANGE	NO CHANGE				
	235558.029	170881.361	1044.678	3	6	West		235558.029	170881.361	West		0.000	0.000		No	NO CHANGE	NO CHANGE				
3- 7W	235644.644	171410.059	1045.85	3	7	West	3-7W	235644.644	171410.059	East	1045.850	0.000	0.000	0.000	No	NO CHANGE	NO CHANGE				
	235459.234	170839.425	1045.85	3	7	West		235459.234	170839.425	West		0.000	0.000		No	NO CHANGE	NO CHANGE				
3- 8W	235545.849	171368.123	1047.021	3	8	West	3-8W	235545.849	171368.123	East	1047.021	0.000	0.000	0.000	No	NO CHANGE	NO CHANGE				
	235360.439	170797.489	1047.021	3	8	west		235360.439	170797.489	West		0.000	0.000		No	NO CHANGE	NO CHANGE				
3- 9W	235448.554	171330.802	1048.192	3	9	West	3-9W	235447.055	171326.187	East	1048.192	-1.499	-4.615	0.000	Yes	Did not calculate		-1.499	-4.615	0.000	See sheet 5 - plotted points to verify
	235262.112	170756.993	1048.192	3	9	West		235262.112	170756.993	West		0.000	0.000		No	NO CHANGE	NO CHANGE				
3- 10W	235359.359	171316.41	1049.363	3	10	West	3-10W	235351.990	171295.731	East	1049.363	-7.369	-22.679	0.000	Yes	Point on curve - did not calculate		-7.369	-22.679	0.000	See sheet 5 - plotted points to verify
	235172.007	170741.8	1049.363	3	10	West		235172.007	170741.800	West		0.000	0.000		No	Did not calculate					
3- 11W	235272.377	171312.829	1050.535	3	11	West	3-11W	235264.306	171287.990	East	1050.535	-8.071	-24.839	0.000	Yes	235264.306	171287.988	0.000	0.002	0.000	
	235085.363	170737.259	1050.535	3	11	West		235085.363	170737.259	West		0.000	0.000		No	NO CHANGE	NO CHANGE				
3- 12W	235185.732	171308.288	1051.706	3	12	West	3-12W	235177.661	171283.449	East	1051.706	-8.071	-24.839	0.000	Yes	235177.661	171283.447	0.000	0.002	0.000	
	234998.719	170732.718	1051.706	3	12	West		234998.719	170732.718	West		0.000	0.000		No	NO CHANGE	NO CHANGE				

VJ-12

Underground Layout Configuration for LA
800-KMC-SS00-00200-000-00A B

TL 7/27/07

EXCEL SPREADSHEET -
ALTERNATIVE
ENDPOINT CALCULATION SUMMAR Y

From Table III. Primary Area Bounding Endpoint Coordinates, Panels 1,2,3 and 4
Underground Layoug Configuration (800-P0C-MGR0-00100-000-00E)

From Table 13 panel 3 West - contunied Underground Layout
Configuration for LA (800-KMC-SS00-00200-000-00Aa)

Label	Northing meters	Easting meters	Elevation meters	Panel	Drift	Zone	Label	Northing meters	Easting meters	Side of Drift	Elevation meters	Delta Northing meters (ULCLA - ULC)	Delta Easting meters (ULCLA - ULC)	Delta Elevation meters (ULCLA - ULC)	Change Intended (Delta North Delta East only)	Calculated NORTHING meters	Calculated EASTIING meters	Delta Northing meters Check Sum	Delta Easting meters Check Sum	Delta Elev meters Check Sum
3- 13W	235099.088	171303.747	1052.877	3	13	West	3-13W	235091.017	171278.907	East	1052.877	-8.071	-24.840	0.000	Yes	235091.017	171278.906	0.000	0.001	0.000
	234912.075	170728.177	1052.877	3	13	West		234912.075	170728.177	West		0.000	0.000		No	NO CHANGE	NO CHANGE			
3- 14W	235012.444	171299.207	1054.049	3	14	West	3-14W	235004.373	171274.366	East	1054.049	-8.071	-24.841	0.000	Yes	235004.373	171274.366	0.000	0.000	0.000
	234825.43	170723.637	1054.049	3	14	West		234825.430	170723.637	West		0.000	0.000		No	NO CHANGE	NO CHANGE			
3- 15W	234925.799	171294.666	1055.22	3	15	West	3-15W	234917.728	171269.825	East	1055.220	-8.071	-24.841	0.000	Yes	234917.728	171269.825	0.000	0.000	0.000
	234738.786	170719.096	1055.22	3	15	West		234738.786	170719.096	West		0.000	0.000		No	NO CHANGE	NO CHANGE			
3- 16W	234839.155	171290.125	1056.391	3	16	West	3-16W	234831.084	171265.284	East	1056.391	-8.071	-24.841	0.000	Yes	234831.084	171265.284	0.000	0.000	0.000
	234652.142	170714.555	1056.391	3	16	West		234652.142	170714.555	West		0.000	0.000		No	NO CHANGE	NO CHANGE			
3- 17W	234752.51	171285.584	1057.563	3	17	West	3-17W	234744.439	171260.744	East	1057.563	-8.071	-24.840	0.000	Yes	234744.439	171260.743	0.000	0.001	0.000
	234565.497	170710.014	1057.563	3	17	West		234565.497	170710.014	West		0.000	0.000		No	NO CHANGE	NO CHANGE			
3- 18W	234665.866	171281.043	1058.734	3	18	West	3-18W	234657.795	171256.203	East	1058.734	-8.071	-24.840	0.000	Yes	234657.795	171256.202	0.000	0.001	0.000
	234478.853	170705.473	1058.734	3	18	West		234478.853	170705.473	West		0.000	0.000		No	NO CHANGE	NO CHANGE			
3- 19W	234579.222	171276.503	1059.905	3	19	West	3-19W	234571.151	171251.662	East	1059.905	-8.071	-24.841	0.000	Yes	234571.151	171251.662	0.000	0.000	0.000
	234392.207	170700.933	1059.905	3	19	West		234392.207	170700.933	West		0.000	0.000		No	NO CHANGE	NO CHANGE			
3- 20W	234492.578	171271.962	1061.077	3	20	West	3-20W	234484.507	171247.121	East	1061.077	-8.071	-24.841	0.000	Yes	234484.507	171247.121	0.000	0.000	0.000
	234305.564	170696.392	1061.077	3	20	West		234305.564	170696.392	West		0.000	0.000		No	NO CHANGE	NO CHANGE			
3- 21W	234405.934	171267.421	1062.248	3	21	West	3-21W	234397.863	171242.580	East	1062.248	-8.071	-24.841	0.000	Yes	234397.863	171242.58	0.000	0.000	0.000
	234218.92	170691.851	1062.248	3	21	West		234218.920	170691.851	West		0.000	0.000		No	NO CHANGE	NO CHANGE			
3- 22W	234319.29	171262.88	1063.419	3	22	West	3-22W	234311.219	171238.040	East	1063.419	-8.071	-24.840	0.000	Yes	234311.219	171238.039	0.000	0.001	0.000
	234132.276	170687.31	1063.419	3	22	West		234132.276	170687.310	West		0.000	0.000		No	NO CHANGE	NO CHANGE			

From Table III. Primary Area Bounding Endpoint Coordinates, Panels 1,2,3 and 4
Underground Layoug Configuration (800-P0C-MGR0-00100-000-00E)

From Table 14 panel 4 West - contunied Underground Layout
Configuration for LA (800-KMC-SS00-00200-000-00Aa)

Label	Northing meters	Easting meters	Elevation meters	Panel	Drift	Zone	Label	Northing meters	Easting meters	Side of Drift	Elevation meters	Delta Northing meters (ULCLA - ULC)	Delta Easting meters (ULCLA - ULC)	Delta Elevation meters (ULCLA - ULC)	Change Intended (Delta North Delta East only)	Calculated NORTHING meters	Calculated EASTIING meters	Delta Northing meters Check Sum	Delta Easting meters Check Sum	Delta Elev meters Check Sum
Panel 4-1	236042.732	171062.509	1038.822	4	1	East	Panel 4-1	236042.732	171062.509	East	1038.822	0.000	0.000	0.000	No	NO CHANGE	NO CHANGE			
	235910.955	170656.939	1038.822	4	1	West		235910.955	170656.939	West		0.000	0.000		No	NO CHANGE	NO CHANGE			
Panel 4-2	235943.937	171020.573	1039.993	4	2	East	Panel 4-2	235943.937	171020.573	East	1039.993	0.000	0.000	0.000	No	NO CHANGE	NO CHANGE			
	235759.426	170452.704	1039.993	4	2	West		235759.426	170452.704	West		0.000	0.000		No	NO CHANGE	NO CHANGE			
Panel 4-3	235845.143	170978.637	1041.164	4	3	East	Panel 4-3	235845.143	170978.637	East	1041.164	0.000	0.000	0.000	No	NO CHANGE	NO CHANGE			
	235659.733	170408.004	1041.164	4	3	West		235659.733	170408.004	West		0.000	0.000		No	NO CHANGE	NO CHANGE			
Panel 4-4	235746.348	170936.701	1042.336	4	4	East	Panel 4-4	235746.348	170936.701	East	1042.336	0.000	0.000	0.000	No	NO CHANGE	NO CHANGE			
	235560.938	170366.068	1042.336	4	4	West		235560.938	170366.068	West		0.000	0.000		No	NO CHANGE	NO CHANGE			
Panel 4-5	235647.553	170894.765	1043.507	4	5	East	Panel 4-5	235647.554	170894.765	East	1043.507	0.001	0.000	0.000	No	NO CHANGE	NO CHANGE			
	235462.144	170324.132	1043.507	4	5	West		235462.144	170324.132	West		0.000	0.000		No	NO CHANGE	NO CHANGE			
Panel 4-6	235548.758	170852.83	1044.678	4	6	East	Panel 4-6	235548.759	170852.829	East	1044.678	0.001	-0.001	0.000	No	NO CHANGE	NO CHANGE			
	235363.349	170282.196	1044.678	4	6	West		235363.349	170282.196	West		0.000	0.000		No	NO CHANGE	NO CHANGE			
Panel 4-7	235449.963	170810.894	1045.85	4	7	East	Panel 4-7	235449.964	170810.893	East	1045.850	0.001	-0.001	0.000	No	NO CHANGE	NO CHANGE			
	235264.554	170240.26	1045.85	4	7	West		235264.554	170240.260	West		0.000	0.000		No	NO CHANGE	NO CHANGE			
Panel 4-8	235351.169	170768.958	1047.021	4	8	East	Panel 4-8	235351.169	170768.957	East	1047.021	0.000	-0.001	0.000	No	NO CHANGE	NO CHANGE			
	235165.759	170198.324	1047.021	4	8	West		235165.759	170198.324	West		0.000	0.000		No	NO CHANGE	NO CHANGE			
Panel 4-9	235252.842	170728.461	1048.192	4	9	East	Panel 4-9	235252.842	170728.461	East	1048.192	0.000	0.000	0.000	No	NO CHANGE	NO CHANGE			
	235061.884	170140.754	1048.192	4	9	West		235061.884	170140.754	West		0.000	0.000		No	NO CHANGE	NO CHANGE			
Panel 4-10	235155.124	170689.838	1049.363	4	10	East	Panel 4-10	235155.124	170689.838	East	1049.363	0.000	0.000	0.000	No	NO CHANGE	NO CHANGE			
	234973.145	170129.767	1049.363	4	10	West		234973.145	170129.767	West		0.000	0.000		No	NO CHANGE	NO CHANGE			

Underground Layout Configuration for LA
800-KMC-SS00-00200-000-00A B

VJ-13

TL 7/27/07

EXCEL SPREADSHEET -
ALTERNATIVE
ENDPOINT CALCULATION SUMMARY

D	E	F	G	H	I	J	K	L	M	N	O	P	Q	R	S	T	U	V	W	X	Y	Z
From Table III. Primary Area Bounding Endpoint Coordinates, Panels 1,2,3 and 4 Underground Layoug Configuration (800-POC-MGR0-00100-000-00E)							From Table 14 panel 4 West - contunied Underground Layout Configuration for LA (800-KMC-SS00-00200-000-00Aa)															
Label	Northing meters	Easting meters	Elevation meters	Panel	Drift	Zone	Label	Northing meters	Easting meters	Side of Drift	Elevation meters	Delta Northing meters (ULCLA - ULC)	Delta Easting meters (ULCLA - ULC)	Delta Elevation meters (ULCLA - ULC)	Change Intended (Delta North Delta East only)	Calculated NORTHING meters	Calculated EASTIING meters		Delta Northing meters Check Sum Post-change	Delta Easting meters Check Sum Post-change	Delta Elev meters Check Sum	
Panel 4-11	235068.48	170685.297	1050.535	4	11	East	Panel 4-11	235068.480	170685.297	East	1050.535	0.000	0.000	0.000	No	NO CHANGE	NO CHANGE					
	234886.501	170125.226	1050.535	4	11	West		234886.501	170125.226	West		0.000	0.000		No	NO CHANGE	NO CHANGE					
Panel 4-12	234981.835	170680.756	1051.706	4	12	East	Panel 4-12	234981.835	170680.756	East	1051.706	0.000	0.000	0.000	No	NO CHANGE	NO CHANGE					
	234799.857	170120.685	1051.706	4	12	West		234799.856	170120.685	West		-0.001	-0.001		No	NO CHANGE	NO CHANGE					
Panel 4-13	234895.191	170676.215	1052.877	4	13	East	Panel 4-13	234895.191	170676.215	East	1052.877	0.000	0.000	0.000	No	NO CHANGE	NO CHANGE					
	234713.213	170116.145	1052.877	4	13	West		234713.212	170116.144	West		-0.001	-0.001		No	NO CHANGE	NO CHANGE					
Panel 4-14	234808.547	170671.674	1054.049	4	14	East	Panel 4-14	234808.547	170671.674	East	1054.049	0.000	0.000	0.000	No	NO CHANGE	NO CHANGE					
	234626.568	170111.604	1054.049	4	14	West		234626.568	170111.603	West		0.000	-0.001		No	NO CHANGE	NO CHANGE					
Panel 4-15	234721.992	170667.133	1055.22	4	15	East	Panel 4-15	234721.903	170667.133	East	1055.220	0.001	0.000	0.000	No	NO CHANGE	NO CHANGE					
	234539.924	170107.063	1055.22	4	15	West		234539.924	170107.062	West		0.000	-0.001		No	NO CHANGE	NO CHANGE					
Panel 4-16	234635.258	170662.593	1056.391	4	16	East	Panel 4-16	234635.258	170662.592	East	1056.391	0.000	-0.001	0.000	No	NO CHANGE	NO CHANGE					
	234453.28	170102.522	1056.391	4	16	West		234453.279	170102.522	West		-0.001	0.000		No	NO CHANGE	NO CHANGE					
Panel 4-17	234548.614	170658.052	1057.563	4	17	East	Panel 4-17	234548.614	170658.052	East	1057.563	0.000	0.000	0.000	No	NO CHANGE	NO CHANGE					
	234366.636	170097.981	1057.563	4	17	West		234366.635	170097.981	West		-0.001	0.000		No	NO CHANGE	NO CHANGE					
Panel 4-18	234461.969	170653.511	1058.734	4	18	East	Panel 4-18	234461.969	170653.511	East	1058.734	0.000	0.000	0.000	No	NO CHANGE	NO CHANGE					
	234279.992	170093.441	1058.734	4	18	West		234279.992	170093.440	West		0.000	-0.001		No	NO CHANGE	NO CHANGE					
Panel 4-19	234375.325	170648.97	1059.905	4	19	East	Panel 4-19	234375.325	170648.970	East	1059.905	0.000	0.000	0.000	No	NO CHANGE	NO CHANGE					
	234193.347	170088.9	1059.905	4	19	West		234193.346	170088.899	West		-0.001	-0.001		No	NO CHANGE	NO CHANGE					
Panel 4-20	234288.681	170644.429	1061.077	4	20	East	Panel 4-20	234288.681	170644.429	East	1061.077	0.000	0.000	0.000	No	NO CHANGE	NO CHANGE					
	234106.823	170084.731	1061.077	4	20	West		234106.823	170084.731	West		0.000	0.000		No	NO CHANGE	NO CHANGE					
Panel 4-21	234202.036	170639.888	1062.248	4	21	East	Panel 4-21	234202.036	170639.888	East	1062.248	0.000	0.000	0.000	No	NO CHANGE	NO CHANGE					
	234023.727	170091.111	1062.248	4	21	West		234023.727	170091.111	West		0.000	0.000		No	NO CHANGE	NO CHANGE					
Panel 4-22	234118.274	170638.061	1063.419	4	22	East	Panel 4-22	234115.392	170635.348	East	1063.419	-0.882	-2.713	0.000	Yes	234115.3922	170635.3472		0.000	0.001	0.000	
	233940.912	170098.356	1063.419	4	22	West		233940.912	170098.356	West		0.000	0.000		No	NO CHANGE	NO CHANGE					
Panel 4-23	234036.35	170654.237	1064.59	4	23	East	Panel 4-23	234028.748	170630.807	East	1064.590	-7.612	-23.430	0.000	Yes	234028.7484	170630.8064		0.000	0.001	0.000	
	233858.098	170105.601	1064.59	4	23	West		233858.098	170105.601	West		0.000	0.000		No	NO CHANGE	NO CHANGE					
Panel 4-24	233949.716	170649.696	1065.762	4	24	East	Panel 4-24	233942.103	170626.266	East	1065.762	-7.613	-23.430	0.000	Yes	233942.1046	170626.2656		-0.002	0.000	0.000	
	233775.283	170112.847	1065.762	4	24	West		233775.283	170112.847	West		0.000	0.000		No	NO CHANGE	NO CHANGE					
Panel 4-25	233863.071	170645.156	1066.933	4	25	East	Panel 4-25	233855.459	170621.725	East	1066.933	-7.612	-23.431	0.000	Yes	233855.4608	170621.7248		-0.002	0.000	0.000	
	233692.467	170120.092	1066.933	4	25	West		233692.467	170120.092	West		0.000	0.000		No	NO CHANGE	NO CHANGE					
Panel 4-26	233776.427	170640.615	1068.105	4	26	East	Panel 4-26	233768.814	170617.184	East	1068.105	-7.613	-23.431	0.000	Yes	233768.8170	170617.184		-0.003	0.000	0.000	
	233609.653	170127.338	1068.104	4	26	West		233609.653	170127.338	West		0.000	0.000		No	NO CHANGE	NO CHANGE					
Panel 4-27	233689.782	170636.074	1069.276	4	27	East	Panel 4-27	233682.170	170612.644	East	1069.276	-7.612	-23.430	0.000	Yes	233682.1732	170612.6431		-0.003	0.001	0.000	
	233526.841	170134.594	1069.276	4	27	West		233526.841	170134.594	West		0.000	0.000		No	NO CHANGE	NO CHANGE					
Panel 4-26	233605.914	170640.076	1070.447	4	28	East	Panel 4-26	233595.525	170608.103	East	1070.447	-10.389	-31.973	0.000	Yes	233595.5294	170608.1023		-0.004	0.001	0.000	
	233448.442	170155.429	1070.447	4	28	West		233448.442	170155.429	West		0.000	0.000		No	NO CHANGE	NO CHANGE					
Panel 4-29	233526.918	170659.069	1071.618	4	29	East	Panel 4-29	233508.881	170603.562	East	1071.618	-18.035	-55.507	0.000	Yes	233508.8856	170603.5615		-0.005	0.000	0.000	
	233378.792	170203.192	1071.618	4	29	West		233378.792	170203.192	West		0.000	0.000		No	NO CHANGE	NO CHANGE					
Panel 4-30	233442.259	170660.645	1072.79	4	30	East	Panel 4-30	233422.007	170598.316	East	1072.790	-20.252	-62.329	0.000	Yes	233422.2418	170599.0207		-0.235	-0.705	0.000	C Diff ≤1 m verified by inspection.
	233321.782	170289.858	1072.79	4	30	West		233321.782	170289.858	West		0.000	0.000		No	NO CHANGE	NO CHANGE					

Underground Layout Configuration for LA
800-KMC-SS00-00200-000-00~~A~~ B

VI-14 TL 7/27/07 ~~TL 7/16/07~~

EXCEL SPREADSHEET -
ALTERNATIVE
ENDPOINT CALCULATION SUMMAR Y

	D	E	F	G	H	I	J	K	L	M	N	O	P	Q	R	S	T	U	V	W	X	Y	Z
257																							
258	From Table III. Primary Area Bounding Endpoint Coordinates, Panels 1,2,3 and 4							From Table 11 panel 2 West - contunied Underground Layout Configuration for LA (800-KMC-SS00-00200-000-00Aa)															
259																							
260																							
261	Underground Layoug Configuration (800-P0C-MGR0-00100-000-00E)																						
262																							
263	Label	Northing meters	Easting meters	Elevation meters	Panel	Drift	Zone	Label	Northing meters	Easting meters	Side of Drift	Elevation meters	Delta Northing meters (ULCLA - ULC)	Delta Easting meters (ULCLA - ULC)	Delta Elevation meters (ULCLA - ULC)	Change Intended (Delta North Delta East only)	Calculated NORTHING meters	Calculated EASTIING meters		Delta Northing meters Check Sum	Delta Easting meters Check Sum	Delta Elev meters Check Sum	
264																							
265																							
266																							
267	Panel 2-1	233366.199	171212.931	1076.304	2	1	East	Panel 2-1	233366.199	171212.931	East	1076.304	0.000	0.000	0.000	No	NO CHANGE	NO CHANGE					
268		233138.688	170512.724	1076.304	2	1	West		233130.468	170487.425	West		-8.220	-25.299		yes	233130.4678	170487.4248		0.000	0.000		
269	Panel 2-2	233279.555	171208.39	1077.476	2	2	East	Panel 2-2	233279.555	171208.390	East	1077.476	0.000	0.000	0.000	No	NO CHANGE	NO CHANGE					
270		233043.824	170482.884	1077.476	2	2	West		233043.824	170482.884	West		0.000	0.000		No	NO CHANGE	NO CHANGE					
271	Panel 2-3	233192.91	171203.849	1078.647	2	3	East	Panel 2-3	233192.910	171203.849	East	1078.647	0.000	0.000	0.000	No	NO CHANGE	NO CHANGE					
272		232957.408	170479.049	1078.647	2	3	West		232957.408	170479.049	West		0.000	0.000		No	NO CHANGE	NO CHANGE					
273	Panel 2-4	233106.266	171199.308	1079.818	2	4	East	Panel 2-4	233106.266	171199.308	East	1079.818	0.000	0.000	0.000	No	NO CHANGE	NO CHANGE					
274		232871.754	170477.554	1079.818	2	4	West		232871.754	170477.554	West		0.000	0.000		No	NO CHANGE	NO CHANGE					
275	Panel 2-5	233019.621	171194.767	1080.99	2	5	East	Panel 2-5	233019.621	171194.767	East	1080.990	0.000	0.000	0.000	No	NO CHANGE	NO CHANGE					
276		232786.099	170476.058	1080.99	2	5	West		232786.099	170476.058	West		0.000	0.000		No	NO CHANGE	NO CHANGE					
277	Pan4el 2-6	232932.977	171190.226	1082.161	2	6	East	Pan4el 2-6	232932.977	171190.226	East	1082.161	0.000	0.000	0.000	No	NO CHANGE	NO CHANGE					
278		232700.444	170474.563	1082.161	2	6	West		232700.444	170474.563	West		0.000	0.000		No	NO CHANGE	NO CHANGE					
279	Panel 2-7	232846.332	171185.686	1083.332	2	7	East	Panel 2-7	232846.332	171185.686	East	1083.332	0.000	0.000	0.000	No	NO CHANGE	NO CHANGE					
280		232614.789	170473.068	1083.332	2	7	West		232614.789	170473.068	West		0.000	0.000		No	NO CHANGE	NO CHANGE					
281	Panel 2-8	232759.688	171181.145	1084.504	2	8	East	Panel 2-8	232759.688	171181.145	East	1084.504	0.000	0.000	0.000	No	NO CHANGE	NO CHANGE					
282		232529.134	170471.573	1084.504	2	8	West		232529.134	170471.573	West		0.000	0.000		No	NO CHANGE	NO CHANGE					
283	Panel 2-9	232673.043	171176.604	1085.675	2	9	East	Panel 2-9	232673.043	171176.604	East	1085.675	0.000	0.000	0.000	No	NO CHANGE	NO CHANGE					
284		232443.479	170470.078	1085.675	2	9	West		232443.479	170470.078	West		0.000	0.000		No	NO CHANGE	NO CHANGE					
285	Panel 2-10	232586.399	171172.063	1086.847	2	10	East	Panel 2-10	232586.399	171172.063	East	1086.847	0.000	0.000	0.000	No	NO CHANGE	NO CHANGE					
286		232357.824	170468.583	1086.847	2	10	West		232357.824	170468.583	West		0.000	0.000		No	NO CHANGE	NO CHANGE					
287	Panel 2-11	232499.755	171167.522	1088.018	2	11	East	Panel 2-11	232499.755	171167.522	East	1088.018	0.000	0.000	0.000	No	NO CHANGE	NO CHANGE					
288		232273.136	170470.061	1088.018	2	11	West		232273.136	170470.061	West		0.000	0.000		No	NO CHANGE	NO CHANGE					
289	Panel 2-12	232413.11	171162.981	1089.189	2	12	East	Panel 2-12	232413.110	171162.981	East	1089.189	0.000	0.000	0.000	No	NO CHANGE	NO CHANGE					
290		232188.446	170471.539	1089.189	2	12	West		232188.446	170471.539	West		0.000	0.000		No	NO CHANGE	NO CHANGE					
291	Panel 2-13	232326.465	171158.44	1090.361	2	13	East	Panel 2-13	232326.465	171158.440	East	1090.361	0.000	0.000	0.000	No	NO CHANGE	NO CHANGE					
292		232103.758	170473.018	1090.361	2	13	West		232103.758	170473.018	West		0.000	0.000		No	NO CHANGE	NO CHANGE					
293	Panel 2-14	232239.821	171153.9	1091.532	2	14	East	Panel 2-14	232239.821	171153.900	East	1091.532	0.000	0.000	0.000	No	NO CHANGE	NO CHANGE					
294		232019.069	170474.496	1091.532	2	14	West		232019.069	170474.496	West		0.000	0.000		No	NO CHANGE	NO CHANGE					
295	Panel 2-15	232153.176	171149.359	1092.703	2	15	East	Panel 2-15	232153.176	171149.359	East	1092.703	0.000	0.000	0.000	No	NO CHANGE	NO CHANGE					
296		231934.38	170475.974	1092.703	2	15	West		231934.380	170475.974	West		0.000	0.000		No	NO CHANGE	NO CHANGE					
297	Panel 2-16	232066.531	171144.818	1093.875	2	16	East	Panel 2-16	232066.531	171144.818	East	1093.875	0.000	0.000	0.000	No	NO CHANGE	NO CHANGE					
298		231849.692	170477.452	1093.875	2	16	West		231849.692	170477.452	West		0.000	0.000		No	NO CHANGE	NO CHANGE					
299	Panel 2-17	231979.887	171140.277	1095.046	2	17	East	Panel 2-17	231979.887	171140.277	East	1095.046	0.000	0.000	0.000	No	NO CHANGE	NO CHANGE					
300		231765.002	170478.931	1095.046	2	17	West		231765.002	170478.931	West		0.000	0.000		No	NO CHANGE	NO CHANGE					
301	Panel 2-18	231893.243	171135.736	1096.218	2	18	East	Panel 2-18	231893.243	171135.736	East	1096.218	0.000	0.000	0.000	No	NO CHANGE	NO CHANGE					
302		231681.102	170482.833	1096.218	2	18	West		231681.102	170482.833	West		0.000	0.000		No	NO CHANGE	NO CHANGE					
303	Panel 2-19	231806.598	171131.195	1097.389	2	19	East	Panel 2-19	231806.598	171131.195	East	1097.389	0.000	0.000	0.000	No	NO CHANGE	NO CHANGE					
304		231597.515	170487.704	1097.389	2	19	West		231597.515	170487.704	West		0.000	0.000		No	NO CHANGE	NO CHANGE					
305	Panel 2-10	231719.953	171126.654	1098.56	2	20	East	Panel 2-10	231719.953	171126.654	East	1098.560	0.000	0.000	0.000	No	NO CHANGE	NO CHANGE					
306		231513.079	170489.959	1098.56	2	20	West		231513.079	170489.959	West		0.000	0.000		No	NO CHANGE	NO CHANGE					
307	Panel 2-21	231633.309	171122.114	1099.732	2	21	East	Panel 2-21	231633.309	171122.114	East	1099.732	0.000	0.000	0.000	No	NO CHANGE	NO CHANGE					
308		231427.892	170489.905	1099.732	2	21	West		231427.892	170489.905	West		0.000	0.000		No	NO CHANGE	NO CHANGE					
309	Panel 2-22	231546.664	171117.573	1100.903	2	22	East	Panel 2-22	231546.664	171117.573	East	1100.903	0.000	0.000	0.000	No	NO CHANGE	NO CHANGE					
310		231341.922	170487.44	1100.903	2	22	West		231341.922	170487.440	West		0.000	0.000		No	NO CHANGE	NO CHANGE					
311	Panel 2-23	231460.02	171113.032	1102.074	2	23	East	Panel 2-23	231460.020	171113.032	East	1102.074	0.000	0.000	0.000	No	NO CHANGE	NO CHANGE					
312		231256.87	170487.8	1102.074	2	23	West		231256.870	170487.800	West		0.000	0.000		No	NO CHANGE	NO CHANGE					
313	Panel 2-24	231373.375	171108.491	1103.246	2	24	East	Panel 2-24	231373.375	171108.491	East	1103.246	0.000	0.000	0.000	No	NO CHANGE	NO CHANGE					
314		231172.181	170489.278	1103.246	2	24	West		231172.181	170489.278	West		0.000	0.000		No	NO CHANGE	NO CHANGE					
315	Panel 2-25	231286.731	171103.95	1104.417	2	25	East	Panel 2-25	231286.731	171103.950	East	1104.417	0.000	0.000	0.000	No	NO CHANGE	NO CHANGE					
316		231089.313	170496.36	1104.417	2	25	West		231089.313	170496.360	West		0.000	0.000		No	NO CHANGE	NO CHANGE					
317	Panel 2-26	231188.179	171062.762	1105.589	2	26	East	Panel 2-26	231188.179	171062.762	East	1105.589	0.000	0.000	0.000	No	NO CHANGE	NO CHANGE					
318		231013.008	170523.641	1105.589	2	26	West		231013.008	170523.641	West		0.000	0.000		No	NO CHANGE	NO CHANGE					
319	Panel 2-27	231088.605	171018.429	1106.76	2	27	East	Panel 2-27	231088.605	171018.429	East	1106.760	0.000	0.000	0.000	No	NO CHANGE	NO CHANGE					
320		230943.765	170572.657	1106.76	2	27	West		230943.765	170572.657	West		0.000	0.000		No	NO CHANGE	NO CHANGE					

Underground Layout Configuration for LA
800-KMC-SS00-00200-000-00~~A~~ B

VI-15 TL 7/27/07 ~~TL 7/16/07~~

EXCEL SPREADSHEET -
ALTERNATIVE
ENDPOINT CALCULATION -SHOW FORMULAS

	D	E	F	G	H	I	J	K	L	M	N	O	P	Q	R	S	T	U	V	W	X	Y	Z
3																							
4																							
5	CHANGE IN ELEVATION PER EMPLACEMENT SPACE (81 m)					1.1713	m	See sheet 1															
6	CHANGE IN THE NORTHING PER EMPLACEMENT SPACE (81 m)					86.6438	m	See sheet 3															
7	CHANGE IN THE EASTING PER EMPLACEMENT SPACE (81 m)					4.54081	m	See sheet 3															
8	CHANGE IN NORTHING CAUSED BY 80 FOOT OFFSET					8.071	m	See sheet 2															
9	CHANGE IN EASTING CAUSED BY 80 FOOT OFFSET					24.841	m	See sheet 2															
10																							
11	From Table III. Primary Area Bounding Endpoint Coordinates, Panels 1,2,3 and 4									From Table 10 - Panel 1 Underground Layout Configuration													
12	Underground Layoug Configuration (800-POC-MGR0-00100-000-00E)									for LA (800-KMC-SS00-00200-000-00Aa													
13																							
14																							
15	Label	Northing meters	Easting meters	Elevation meters	Panel	Drift	Zone	Label	Northing meters	Easting meters	Side of Drift	Elevation meters	Delta Northing meters (ULCLA - ULC)	Delta Easting meters (ULCLA - ULC)	Delta Elevation meters (ULCLA - ULC)	Change Intended (Delta North Delta East only)	Calculated NORTHING meters	Calculated EASTING meters	Calculated Elevation meters	New Delta Northing meters (Calc - ULCLA)	New Delta Easting meters (Calc - ULC)	Delta Elev meters (Calc - ULC)	Remark
16																							
17																							
18																							
19	3-22W	234132.276	170687.31	1063.419	3	22	West	3-22W	234132.276	170687.31	West	1063.419	=+L19-E19	=+M19-F19	=+O19-G19	No	NO CHANGE	NO CHANGE			=+M19-F19	=+IF(O19="","",O19-G19)	
20	Panel 1-1	234232.846	171258.34	1064.59	1	1	East	3-23W	234224.575	171233.499	East	1064.59	=+L20-E20	=+M20-F20	=+O20-G20	Yes	=+E20-I5	=+F20-I9	=+V22-I5	=+T20-L20	=+U20-M20	=+V20-O20	
21		234085.101	170804.246	1064.59	1	1	West		234045.632	170682.769	West		=+L21-E21	=+M21-F21		Yes	=+E19-I5	=+F19-I7		=+T21-L21	=+M21-U21	=+IF(O21="","",O21-G21)	
22	Panel 1-2	234148	171253.799	1065.762	1	2	East	3-24W	234137.931	171228.958	East	1065.761	=+L22-E22	=+M22-F22	=+O22-G22	Yes	=+E22-I5	=+F22-I9	=+V24-I5	=+T22-L22	=+O22-V22	=+V22-O22	
23		233965.91	170702.613	1065.762	1	2	West		233958.988	170678.229	West		=+L23-E23	=+M23-F23		Yes	=+T21-I5	=+U21-I7		=+T23-L23	=+M23-U23	=+IF(O23="","",O23-G23)	
24	Panel 1-3	234056.357	171249.258	1066.933	1	3	East	3-25W	234051.285	171224.417	East	1066.933	=+L24-E24	=+M24-F24	=+O24-G24	Yes	=+E24-I5	=+F24-I9	=+V26-I5	=+T24-L24	=+M24-U24	=+V24-O24	
25		233979.956	170697.118	1066.933	1	3	West		233972.342	170673.688	West		=+L25-E25	=+M25-F25		Yes	=+T23-I5	=+U23-I7		=+T25-L25	=+M25-U25	=+IF(O25="","",O25-G25)	
26	Panel 1-4	233872.714	171244.717	1068.105	1	4	East	3-26W	233964.64	171219.877	East	1068.104	=+L26-E26	=+M26-F26	=+O26-G26	Yes	=+E26-I5	=+F26-I9	=+V28-I5	=+T26-L26	=+M26-U26	=+V26-O26	
27		233793.312	170692.577	1068.105	1	4	West		233785.698	170669.147	West		=+L27-E27	=+M27-F27		Yes	=+T25-I5	=+U25-I7		=+T27-L27	=+M27-U27	=+IF(O27="","",O27-G27)	
28	Panel 1-5	233686.07	171240.176	1069.276	1	5	East	PANEL 1 / 1	233686.07	171240.176	East	1069.276	=+L28-E28	=+M28-F28	=+O28-G28	No	NO CHANGE	NO CHANGE	=+G28				
29		233708.625	170694.06	1069.276	1	5	West		233734.401	170773.388	West	1069.276	=+L29-E29	=+M29-F29		Yes	=+E21-4*I6	=+F21-4*I7		=+T29-L29	=+M29-U29		See sheet 4
30	Panel 1-6	233799.426	171235.636	1070.447	1	6	East	PANEL 1-2	233799.426	171235.636	East	1070.447	=+L30-E30	=+M30-F30	=+O30-G30	No	NO CHANGE	NO CHANGE	=+V28+I5	=+L30-E30	=+M30-F30	=+V30-O30	
31		233636.504	170734.215	1070.447	1	6	West		233620.394	170684.634	West	1070.447	=+L31-E31	=+M31-F31		Yes	=+E25-3*I6	=+F25-3*I7		=+T31-L31	=+M31-U31		See sheet 4
32	Panel 1-7	233712.783	171231.095	1071.618	1	7	East	PANEL 1-3	233712.783	171231.095	East	1071.618	=+L32-E32	=+M32-F32	=+O32-G32	No	NO CHANGE	NO CHANGE	=+V30+I5			=+V32-O32	
33		233578.451	170817.667	1071.618	1	7	West		233533.381	170678.955	West	1071.618	=+L33-E33	=+M33-F33		Yes	=+E25-4*I6	=+F25-4*I7		=+T33-L33	=+M33-U33		
34	Panel 1-8	233626.138	171226.564	1072.79	1	8	East	PANEL 1-4	233626.138	171226.564	East	1072.79	=+L34-E34	=+M34-F34	=+O34-G34	No	NO CHANGE	NO CHANGE	=+V32+I5			=+V34-O34	
35		233521.665	170905.08	1072.79	1	8	West		233446.736	170674.414	West	1072.79	=+L35-E35	=+M35-F35		Yes	=+E25-5*I$6	=+F25-5*I7		=+T35-L35	=+M35-U35		
36	NEW DRIFT - NOT IN THE ULC CC							PANEL 1-5	233639.494	171222.014	East	1073.961	New Drift		=+O36-G36	N/A	=+E32-2*I6	=+F32-2*I7	=+V34+I5	=+T36-L36	=+M36-U36	=+V36-O36	
37									233360.092	170669.874	West		New Drift			N/A	=+E25-6*I6	=+F25-6*I7		=+T37-L37	=+M37-U37		
38	NEW DRIFT - NOT IN THE ULC CC							PANEL 1-6	233452.851	171217.473	East	1075.132	New Drift		=+O38-G38	N/A	=+E24-7*I6	=+F32-3*I7	=+V36+I5	=+T38-L38	=+M38-U38	=+V38-O38	
39									233273.449	170665.333	West		New Drift			N/A	=+E25-7*I6	=+F25-7*I7		=+T39-L39	=+M39-U39		
40																							
41	From Table III. Primary Area Bounding Endpoint Coordinates, Panels 1,2,3 and 4									From Table 12 - Panel 3 Underground Layout Configuration													
42	Underground Layoug Configuration (800-POC-MGR0-00100-000-00E)									for LA (800-KMC-SS00-00200-000-00Aa													
43																							
44	Label	Northing meters	Easting meters	Elevation meters	Panel	Drift	Zone	Label	Northing meters	Easting meters	Side of Drift	Elevation meters	Delta Northing meters (ULCLA - ULC)	Delta Easting meters (ULCLA - ULC)	Delta Elevation meters (ULCLA - ULC)	Change Intended (Delta North Delta East only)	Calculated NORTHING meters	Calculated EASTING meters		Delta Northing meters Check Sum	Delta Easting meters Check Sum	Delta Elev meters Check Sum	
45																							
46																							
47																							
48	3-1E	235992.979	171695.756	1042.336	3	1	East	3-1E	235992.979	171695.756	West	1042.336	=+L48-E48	=+M48-F48	=+O48-G48	No	NO CHANGE	NO CHANGE					
49		236137.403	172140.248	1042.336	3	1	East		236137.403	172140.248	East		=+L49-E49	=+M49-F49		No	NO CHANGE	NO CHANGE					
50	3-2E	235894.184	171653.82	1043.507	3	2	East	3-2E	235894.184	171653.82	West	1043.507	=+L50-E50	=+M50-F50	=+O50-G50	No	NO CHANGE	NO CHANGE					
51		236081.661	172230.815	1043.507	3	2	East		236081.661	172230.815	East		=+L51-E51	=+M51-F51		No	NO CHANGE	NO CHANGE					
52	3-3E	235795.39	171611.884	1044.678	3	3	East	3-3E	235795.39	171611.884	West	1044.678	=+L52-E52	=+M52-F52	=+O52-G52	No	NO CHANGE	NO CHANGE					
53		236012.902	172281.32	1044.678	3	3	East		236012.902	172281.32	East		=+L53-E53	=+M53-F53		No	NO CHANGE	NO CHANGE					
54	3-4E	235696.595	171569.949	1045.85	3	4	East	3-4E	235696.595	171569.949	West	1045.85	=+L54-E54	=+M54-F54	=+O54-G54	No	NO CHANGE	NO CHANGE					
55		235936.845	172309.363	1045.85	3	4	East		235936.845	172309.363	East		=+L55-E55	=+M55-F55		No	NO CHANGE	NO CHANGE					
56	3-5E	235597.8	171528.013	1047.021	3	5	East	3-5E	235597.8	171528.013	West	1047.021	=+L56-E56	=+M56-F56	=+O56-G56	No	NO CHANGE	NO CHANGE					
57		235835.884	172260.76	1047.021	3	5	East		235835.884	172260.76	East		=+L57-E57	=+M57-F57		No	NO CHANGE	NO CHANGE					
58	3-6E	235497.316	171463.877	1048.192	3	6	East	3-6E	235499.005	171460.077	West	1048.192	=+L58-E58	=+M58-F58	=+O58-G58	Yes				=+L58-E58	=+M58-F58	=+IF(O58="","",O58-G58)	See sheet 5 - plotted points to verify
59		235733.817	172208.754	1048.192	3	6	East		235733.817	172208.754	East		=+L59-E59	=+M59-F59		No	NO CHANGE	NO CHANGE				=+IF(O59="","",O59-G59)	
60	3-7E	235400.561	171445.618	1049.353	3	7	East	3-7E	235400.211	171444.142	West	1049.353	=+L60-E60	=+M60-F60	=+O60-G60	Yes				=+L60-E60	=+M60-F60	=+IF(O60="","",O60-G60)	See sheet 5 - plotted points to verify
61		235631.761	172156.749	1049.353	3	7	East		235631.761	172156.749	East		=+L61-E61	=+M61-F61		No	NO CHANGE	NO CHANGE				=+IF(O61="","",O61-G61)	
62	3-8E	235314.047	171461.077	1050.535	3	8	East	3-8E	235305.976	171418.236	West	1050.535	=+L62-E62	=+M62-F62	=+O62-G62	Yes	=+E62-I8	=+F62-I9		=+L62-T62	=+M62-U62	=+IF(O62="","",O62-G62)	
63		235529.684	172104.743	1050.535	3	8	East		235529.684	172104.743	East		=+L63-E63	=+M63-F63		No	NO CHANGE	NO CHANGE				=+IF(O63="","",O63-G63)	
64	3-9E	235227.403	171436.837	1051.706	3	9	East	3-9E	235219.332	171411.696	West	1051.706	=+L64-E64	=+M64-F64	=+O64-G64	Yes	=+E64-I8	=+F64-I9		=+L64-T64	=+M64-U64	=+IF(O64="","",O64-G64)	
65		235427.618	172052.738	1051.706	3	9	East	3-9E	235427.618	172052.738	East		=+L65-E65	=+M65-F65		No	NO CHANGE	NO CHANGE				=+IF(O65="","",O65-G65)	
66	3-10E	235140.759	171431.996	1052.877	3	10	East	3-10E	235132.688	171407.155	West	1052.877	=+L66-E66	=+M66-F66	=+O66-G66	Yes	=+E66-I8	=+F66-I9		=+L66-T66	=+M66-U66	=+IF(O66="","",O66-G66)	
67		235325.552	172000.733	1052.877	3	10	East	3-10E	235325.552	172000.733	East		=+L67-E67	=+M67-F67		No	NO CHANGE	NO CHANGE				=+IF(O67="","",O67-G67)	
68	3-11E	235064.115	171427.455	1054.049	3	11	East	3-11E	235046.044	171402.514	West	1054.049	=+L68-E68	=+M68-F68	=+O68-G68	No	=+E68-I8	=+F68-I9		=+L68-T68	=+M68-U68	=+IF(O68="","",O68-G68)	
69		235223.485	171948.727	1054.049	3	11	East		235223.485	171948.727	East		=+L69-E69	=+M69-F69		No	NO CHANGE	NO CHANGE				=+IF(O69="","",O69-G69)	
70																							
71																							
72																							

VI-16

Underground Layout Configuration for LA
800-KMC-SS00-00200-000-00A B
TL 7/27/07
~~TL 7/16/07~~

EXCEL SPREADSHEET -
ALTERNATIVE
ENDPOINT CALCULATION -SHOW FORMULAS

From Table III. Primary Area Bounding Endpoint Coordinates, Panels 1,2,3 and 4

From Table 12 - Panel 3East Underground Layout Configuration

Underground Layoug Configuration (800-POC-MGR0-00100-000-00E)

for LA (800-KMC-SS00-00200-000-00Aa

Label	Northing meters	Easting meters	Elevation meters	Panel	Drift	Zone	Label	Northing meters	Easting meters	Side of Drift	Elevation meters	Delta Northing meters (ULCLA - ULC)	Delta Easting meters (ULCLA - ULC)	Delta Elevation meters (ULCLA - ULC)	Change Intended (Delta North Delta East only)	Calculated NORTHING meters	Calculated EASTING meters	Delta Northing meters Check Sum	Delta Easting meters Check Sum	Delta Elev meters Check Sum	
3-12E	234907.47	171422.914	1055.22	3	12	East		234959.399	171398.074	West		=+L84-E84	=+M84-F84		Yes	=+E84-I9	=+F84-I9	=+L84-T84	=+M84-U84	=+IF(O84="","",O84-G84)	
3-13E	235121.419	171696.722	1055.22	3	12	East	3-12E	235121.419	171696.722	East	1055.22	=+L85-E85	=+M85-F85	=+G85-O85	No	NO CHANGE	NO CHANGE				
3-13E	234880.826	171418.973	1056.391	3	13	East	3-13E	234872.755	171393.533	West		=+L86-E86	=+M86-F86		Yes	=+E86-I9	=+F86-I9	=+L86-T86	=+M86-U86	=+IF(O86="","",O86-G86)	
3-13E	235023.896	171858.696	1056.391	3	13	East	3-13E	235023.896	171858.696	East	1056.391	=+L87-E87	=+M87-F87	=+G87-O87	No	NO CHANGE	NO CHANGE				
3-14E	234794.182	171413.833	1057.563	3	14	East		234786.111	171368.992	West		=+L88-E88	=+M88-F88		Yes	=+E88-I9	=+F88-I9	=+L88-T88	=+M88-U88	=+IF(O88="","",O88-G88)	
3-14E	234931.743	171837.205	1057.563	3	14	East	3-14E	234932.407	171838.249	East	1057.563	=+L89-E89	=+M89-F89	=+G89-O89	no	NO CHANGE	NO CHANGE	=+L89-T89	=+M89-U89	=+IF(O89="","",O89-G89)	See sheet 6
3-15E	234707.537	171439.292	1058.734	3	15	East		234699.486	171384.851	West		=+L90-E90	=+M90-F90		Yes	=+E90-I9	=+F90-I9	=+L90-T90	=+M90-U90	=+IF(O90="","",O90-G90)	
3-15E	234837.896	171810.496	1058.734	3	15	East	3-15E	234837.896	171810.496	East	1058.734	=+L91-E91	=+M91-F91	=+G91-O91	No	NO CHANGE	NO CHANGE				See sheet 6
3-16E	234620.803	171404.751	1059.905	3	16	East		234612.822	171379.911	West		=+L92-E92	=+M92-F92		Yes	=+E92-I9	=+F92-I9	=+L92-T92	=+M92-U92	=+IF(O92="","",O92-G92)	
3-16E	234749.206	171799.66	1059.905	3	16	East	3-16E	234749.206	171799.66	East	1059.905	=+L93-E93	=+M93-F93	=+G93-O93	No	NO CHANGE	NO CHANGE				See sheet 6
3-17E	234534.249	171400.21	1061.077	3	17	East		234526.178	171375.37	West		=+L94-E94	=+M94-F94		Yes	=+E94-I9	=+F94-I9	=+L94-T94	=+M94-U94	=+IF(O94="","",O94-G94)	
3-17E	234657.945	171780.909	1061.077	3	17	East	3-17E	234657.945	171780.909	East	1061.077	=+L95-E95	=+M95-F95	=+G95-O95	No	NO CHANGE	NO CHANGE				
3-18E	234447.504	171396.67	1062.248	3	18	East		234439.533	171370.829	West		=+L96-E96	=+M96-F96		Yes	=+E96-I9	=+F96-I9	=+L96-T96	=+M96-U96	=+IF(O96="","",O96-G96)	
3-18E	234569.457	171761.463	1062.248	3	18	East	3-18E	234569.457	171761.463	East	1062.248	=+L97-E97	=+M97-F97	=+G97-O97	No	NO CHANGE	NO CHANGE				
3-19E	234360.06	171391.129	1063.419	3	19	East		234352.889	171366.268	West		=+L98-E98	=+M98-F98		Yes	=+E98-I9	=+F98-I9	=+L98-T98	=+M98-U98	=+IF(O98="","",O98-G98)	
3-19E	234474.97	171742.017	1063.419	3	19	East	3-19E	234474.97	171742.017	East	1063.419	=+L99-E99	=+M99-F99	=+G99-O99	No	NO CHANGE	NO CHANGE				

From Table III. Primary Area Bounding Endpoint Coordinates, Panels 1,2,3 and 4

From Table 13 panel 3 West Underground Layout Configuration

Underground Layoug Configuration (800-POC-MGR0-00100-000-00E)

for LA (800-KMC-SS00-00200-000-00Aa

Label	Northing meters	Easting meters	Elevation meters	Panel	Drift	Zone	Label	Northing meters	Easting meters	Side of Drift	Elevation meters	Delta Northing meters (ULCLA - ULC)	Delta Easting meters (ULCLA - ULC)	Delta Elevation meters (ULCLA - ULC)	Change Intended (Delta North Delta East only)	Calculated NORTHING meters	Calculated EASTING meters	Delta Northing meters Check Sum	Delta Easting meters Check Sum	Delta Elev meters Check Sum	
3-1W	236237.413	171661.675	1038.822	3	1	West	3-1W	236237.413	171661.675	East	1038.822	=+L111-E111	=+M111-F111	=+G111-O111	Yes	NO CHANGE	NO CHANGE				
3-1W	236052.003	171091.041	1038.822	3	1	West		236052.003	171091.041	West		=+L112-E112	=+M112-F112		Yes	NO CHANGE	NO CHANGE				
3-2W	236136.518	171619.739	1039.993	3	2	West	3-2W	236136.518	171619.739	East	1039.993	=+L113-E113	=+M113-F113	=+G113-O113	Yes	NO CHANGE	NO CHANGE				
3-2W	235953.208	171049.105	1039.993	3	2	West		235953.208	171049.105	West		=+L114-E114	=+M114-F114		Yes	NO CHANGE	NO CHANGE				
3-3W	236039.823	171577.803	1041.164	3	3	West	3-3W	236039.823	171577.803	East	1041.164	=+L115-E115	=+M115-F115	=+G115-O115	Yes	NO CHANGE	NO CHANGE				
3-3W	235854.413	171007.169	1041.164	3	3	West		235854.413	171007.169	West		=+L116-E116	=+M116-F116		Yes	NO CHANGE	NO CHANGE				
3-4W	235941.028	171535.867	1042.336	3	4	West	3-4W	235941.028	171535.867	East	1042.336	=+L117-E117	=+M117-F117	=+G117-O117	Yes	NO CHANGE	NO CHANGE				
3-4W	235755.618	170965.233	1042.336	3	4	West		235755.618	170965.233	West		=+L118-E118	=+M118-F118		Yes	NO CHANGE	NO CHANGE				
3-5W	235842.233	171493.931	1043.507	3	5	West	3-5W	235842.233	171493.931	East	1043.507	=+L119-E119	=+M119-F119	=+G119-O119	Yes	NO CHANGE	NO CHANGE				
3-5W	235656.823	170923.297	1043.507	3	5	West		235656.823	170923.297	West		=+L120-E120	=+M120-F120		Yes	NO CHANGE	NO CHANGE				
3-6W	235743.438	171451.995	1044.678	3	6	West	3-6W	235743.438	171451.995	East	1044.678	=+L121-E121	=+M121-F121	=+G121-O121	Yes	NO CHANGE	NO CHANGE				
3-6W	235558.029	170881.361	1044.678	3	6	West		235558.029	170881.361	West		=+L122-E122	=+M122-F122		No	NO CHANGE	NO CHANGE				
3-7W	235644.644	171410.059	1045.85	3	7	West	3-7W	235644.644	171410.059	East	1045.85	=+L123-E123	=+M123-F123	=+G123-O123	No	NO CHANGE	NO CHANGE				
3-7W	235459.234	170839.425	1046.85	3	7	West		235459.234	170839.425	West		=+L124-E124	=+M124-F124		No	NO CHANGE	NO CHANGE				
3-8W	235545.849	171368.123	1047.021	3	8	West	3-8W	235545.849	171368.123	East	1047.021	=+L125-E125	=+M125-F125	=+G125-O125	No	NO CHANGE	NO CHANGE				
3-8W	235360.439	170797.489	1047.021	3	8	west		235360.439	170797.489	West		=+L126-E126	=+M126-F126		No	NO CHANGE	NO CHANGE				
3-9W	235446.564	171330.602	1048.192	3	9	West	3-9W	235447.055	171326.187	East	1048.192	=+L127-E127	=+M127-F127	=+G127-O127	Yes	Did not calculate		=+L127-E127	=+M127-F127	=+IF(O127="","",O127-G127)	See sheet 5 - plotted points to verify
3-9W	235262.112	170756.993	1048.192	3	9	West		235262.112	170756.993	West		=+L128-E128	=+M128-F128		No	NO CHANGE	NO CHANGE			=+IF(O128="","",O128-G128)	
3-10W	235349.359	171318.41	1049.363	3	10	West	3-10W	235351.99	171295.731	East	1049.363	=+L129-E129	=+M129-F129	=+G129-O129	Yes	Point on curve - did not		=+L129-E129	=+M129-F129	=+IF(O129="","",O129-G129)	See sheet 5 - plotted points to verify
3-10W	235172.007	170741.8	1049.363	3	10	West		235172.007	170741.8	West		=+L130-E130	=+M130-F130		No	Did not calculate					
3-11W	235272.077	171312.629	1050.535	3	11	West	3-11W	235284.306	171287.00	East	1050.535	=+L131-E131	=+M131-F131	=+G131-O131	Yes	=+E131-I9	=+F131-I9	=+L131-T131	=+M131-U131	=+IF(O131="","",O131-G131)	
3-11W	235085.363	170737.259	1050.535	3	11	West		235085.363	170737.259	West		=+L132-E132	=+M132-F132		No	NO CHANGE	NO CHANGE				
3-12W	235180.732	171308.288	1051.706	3	12	West	3-12W	235177.661	171283.449	East	1051.706	=+L133-E133	=+M133-F133	=+G133-O133	Yes	=+E133-I9	=+F133-I9	=+L133-T133	=+M133-U133	=+IF(O133="","",O133-G133)	
3-12W	234998.719	170732.718	1051.706	3	12	West		234998.719	170732.718	West		=+L134-E134	=+M134-F134		No	NO CHANGE	NO CHANGE				

Underground Layout Configuration for LA
800-KMC-SS00-00200-000-00A B
TL 7/17/07
~~TL 7/16/07~~

EXCEL SPREADSHEET -
ALTERNATIVE
ENDPOINT CALCULATION -SHOW FORMULAS

From Table III. Primary Area Bounding Endpoint Coordinates, Panels 1,2,3 and 4

Underground Layoug Configuration (800-P0C-MGR0-00100-000-00E)

From Table 13 panel 3 West - contunied Underground Layout

Configuration for LA (800-KMC-SS00-00200-000-00Aa)

Label	Northing meters	Easting meters	Elevation meters	Panel	Drift	Zone	Label	Northing meters	Easting meters	Side of Drift	Elevation meters	Delta Northing meters (ULCLA - ULC)	Delta Easting meters (ULCLA - ULC)	Delta Elevation meters (ULCLA - ULC)	Change Intended (Delta North Delta East only)	Calculated NORTHING meters	Calculated EASTIING meters	Delta Northing meters Check Sum	Delta Easting meters Check Sum	Delta Elev meters Check Sum
3- 13W	235099.088	171303.747	1052.877	3	13	West	3-13W	235091.017	171278.907	East	1052.877	=+L150-E150	=+M150-F150	=+G150-O150	Yes	=+E150-I8	=+F150-I9	=+L150-T150	=+M150-U150	=+IF(O150="","",O150-G150)
	234912.075	170728.177	1052.877	3	13	West		234912.075	170728.177	West		=+L151-E151	=+M151-F151		No	NO CHANGE	NO CHANGE			=+IF(O151="","",O151-G151)
3- 14W	235012.444	171209.207	1054.049	3	14	West	3-14W	235004.373	171274.366	East	1054.049	=+L152-E152	=+M152-F152	=+G152-O152	Yes	=+E152-I8	=+F152-I9	=+L152-T152	=+M152-U152	=+IF(O152="","",O152-G152)
	234825.43	170723.637	1054.049	3	14	West		234825.43	170723.637	West		=+L153-E153	=+M153-F153		No	NO CHANGE	NO CHANGE			=+IF(O153="","",O153-G153)
3- 15W	234825.799	171294.665	1055.22	3	15	West	3-15W	234917.728	171269.825	East	1055.22	=+L154-E154	=+M154-F154	=+G154-O154	Yes	=+E154-I8	=+F154-I9	=+L154-T154	=+M154-U154	=+IF(O154="","",O154-G154)
	234738.786	170719.096	1055.22	3	15	West		234738.786	170719.096	West		=+L155-E155	=+M155-F155		No	NO CHANGE	NO CHANGE			=+IF(O155="","",O155-G155)
3- 16W	234839.155	171290.125	1056.391	3	16	West	3-16W	234831.084	171265.284	East	1056.391	=+L156-E156	=+M156-F156	=+G156-O156	Yes	=+E156-I8	=+F156-I9	=+L156-T156	=+M156-U156	=+IF(O156="","",O156-G156)
	234652.142	170714.555	1056.391	3	16	West		234652.142	170714.555	West		=+L157-E157	=+M157-F157		No	NO CHANGE	NO CHANGE			=+IF(O157="","",O157-G157)
3- 17W	234752.51	171285.564	1057.563	3	17	West	3-17W	234744.439	171260.744	East	1057.563	=+L158-E158	=+M158-F158	=+G158-O158	Yes	=+E158-I8	=+F158-I9	=+L158-T158	=+M158-U158	=+IF(O158="","",O158-G158)
	234565.497	170710.014	1057.563	3	17	West		234565.497	170710.014	West		=+L159-E159	=+M159-F159		No	NO CHANGE	NO CHANGE			=+IF(O159="","",O159-G159)
3- 18W	234665.866	171281.043	1058.734	3	18	West	3-18W	234657.796	171256.203	East	1058.734	=+L160-E160	=+M160-F160	=+G160-O160	Yes	=+E160-I8	=+F160-I9	=+L160-T160	=+M160-U160	=+IF(O160="","",O160-G160)
	234478.853	170705.473	1058.734	3	18	West		234478.853	170705.473	West		=+L161-E161	=+M161-F161		No	NO CHANGE	NO CHANGE			=+IF(O161="","",O161-G161)
3- 19W	234579.222	171276.503	1059.905	3	19	West	3-19W	234571.151	171251.662	East	1059.905	=+L162-E162	=+M162-F162	=+G162-O162	Yes	=+E162-I8	=+F162-I9	=+L162-T162	=+M162-U162	=+IF(O162="","",O162-G162)
	234392.207	170700.933	1059.905	3	19	West		234392.207	170700.933	West		=+L163-E163	=+M163-F163		No	NO CHANGE	NO CHANGE			=+IF(O163="","",O163-G163)
3- 20W	234492.578	171271.962	1061.077	3	20	West	3-20W	234484.507	171247.121	East	1061.077	=+L164-E164	=+M164-F164	=+G164-O164	Yes	=+E164-I8	=+F164-I9	=+L164-T164	=+M164-U164	=+IF(O164="","",O164-G164)
	234305.564	170696.392	1061.077	3	20	West		234305.564	170696.392	West		=+L165-E165	=+M165-F165		No	NO CHANGE	NO CHANGE			=+IF(O165="","",O165-G165)
3- 21W	234406.934	171267.421	1062.248	3	21	West	3-21W	234397.963	171242.58	East	1062.248	=+L166-E166	=+M166-F166	=+G166-O166	Yes	=+E166-I8	=+F166-I9	=+L166-T166	=+M166-U166	=+IF(O166="","",O166-G166)
	234218.92	170691.851	1062.248	3	21	West		234218.92	170691.851	West		=+L167-E167	=+M167-F167		No	NO CHANGE	NO CHANGE			=+IF(O167="","",O167-G167)
3- 22W	234319.29	171262.88	1063.419	3	22	West	3-22W	234311.219	171238.04	East	1063.419	=+L168-E168	=+M168-F168	=+G168-O168	Yes	=+E168-I8	=+F168-I9	=+L168-T168	=+M168-U168	=+IF(O168="","",O168-G168)
	234132.276	170687.31	1063.419	3	22	West		234132.276	170687.31	West		=+L169-E169	=+M169-F169		No	NO CHANGE	NO CHANGE			=+IF(O169="","",O169-G169)

From Table III. Primary Area Bounding Endpoint Coordinates, Panels 1,2,3 and 4

Underground Layoug Configuration (800-P0C-MGR0-00100-000-00E)

From Table 14 panel 4 West - contunied Underground Layout

Configuration for LA (800-KMC-SS00-00200-000-00Aa)

Label	Northing meters	Easting meters	Elevation meters	Panel	Drift	Zone	Label	Northing meters	Easting meters	Side of Drift	Elevation meters	Delta Northing meters (ULCLA - ULC)	Delta Easting meters (ULCLA - ULC)	Delta Elevation meters (ULCLA - ULC)	Change Intended (Delta North Delta East only)	Calculated NORTHING meters	Calculated EASTIING meters	Delta Northing meters Check Sum	Delta Easting meters Check Sum	Delta Elev meters Check Sum
Panel 4-1	236042.732	171062.509	1038.822	4	1	East	Panel 4-1	236042.732	171062.509	East	1038.822	=+L180-E180	=+M180-F180	=+G180-O180	No	NO CHANGE	NO CHANGE			
	235910.955	170656.939	1038.822	4	1	West		235910.955	170656.939	West		=+L181-E181	=+M181-F181		No	NO CHANGE	NO CHANGE			
Panel 4-2	235943.937	171020.573	1039.993	4	2	East	Panel 4-2	235943.937	171020.573	East	1039.993	=+L182-E182	=+M182-F182	=+G182-O182	No	NO CHANGE	NO CHANGE			
	235759.426	170452.704	1039.993	4	2	West		235759.426	170452.704	West		=+L183-E183	=+M183-F183		No	NO CHANGE	NO CHANGE			
Panel 4-3	235845.143	170978.637	1041.164	4	3	East	Panel 4-3	235845.143	170978.637	East	1041.164	=+L184-E184	=+M184-F184	=+G184-O184	No	NO CHANGE	NO CHANGE			
	235659.733	170408.004	1041.164	4	3	West		235659.733	170408.004	West		=+L185-E185	=+M185-F185		No	NO CHANGE	NO CHANGE			
Panel 4-4	235746.348	170936.701	1042.336	4	4	East	Panel 4-4	235746.348	170936.701	East	1042.336	=+L186-E186	=+M186-F186	=+G186-O186	No	NO CHANGE	NO CHANGE			
	235560.938	170366.066	1042.336	4	4	West		235560.938	170366.066	West		=+L187-E187	=+M187-F187		No	NO CHANGE	NO CHANGE			
Panel 4-5	235647.553	170894.765	1043.507	4	5	East	Panel 4-5	235647.553	170894.765	East	1043.507	=+L188-E188	=+M188-F188	=+G188-O188	No	NO CHANGE	NO CHANGE			
	235462.144	170324.132	1043.507	4	5	West		235462.144	170324.132	West		=+L189-E189	=+M189-F189		No	NO CHANGE	NO CHANGE			
Panel 4-6	235548.758	170852.83	1044.678	4	6	East	Panel 4-6	235548.758	170852.828	East	1044.678	=+L190-E190	=+M190-F190	=+G190-O190	No	NO CHANGE	NO CHANGE			
	235363.349	170282.196	1044.678	4	6	West		235363.349	170282.196	West		=+L191-E191	=+M191-F191		No	NO CHANGE	NO CHANGE			
Panel 4-7	235449.963	170810.894	1045.85	4	7	East	Panel 4-7	235449.964	170810.893	East	1045.85	=+L192-E192	=+M192-F192	=+G192-O192	No	NO CHANGE	NO CHANGE			
	235264.554	170240.26	1045.85	4	7	West		235264.554	170240.26	West		=+L193-E193	=+M193-F193		No	NO CHANGE	NO CHANGE			
Panel 4-8	235351.169	170768.958	1047.021	4	8	East	Panel 4-8	235351.169	170768.957	East	1047.021	=+L194-E194	=+M194-F194	=+G194-O194	No	NO CHANGE	NO CHANGE			
	235165.759	170198.324	1047.021	4	8	West		235165.759	170198.324	West		=+L195-E195	=+M195-F195		No	NO CHANGE	NO CHANGE			
Panel 4-9	235252.842	170726.461	1048.192	4	9	East	Panel 4-9	235252.842	170726.461	East	1048.192	=+L196-E196	=+M196-F196	=+G196-O196	No	NO CHANGE	NO CHANGE			
	235061.884	170140.754	1048.192	4	9	West		235061.884	170140.754	West		=+L197-E197	=+M197-F197		No	NO CHANGE	NO CHANGE			
Panel 4-10	235155.124	170689.838	1049.363	4	10	East	Panel 4-10	235155.124	170689.838	East	1049.363	=+L198-E198	=+M198-F198	=+G198-O198	No	NO CHANGE	NO CHANGE			
	234973.145	170129.767	1049.363	4	10	West		234973.145	170129.767	West		=+L199-E199	=+M199-F199		No	NO CHANGE	NO CHANGE			

Underground Layout Configuration for LA
800-KMC-SS00-00200-000-00A/ B
TL 7/27/07
~~TL 7/16/07~~

VI-18

EXCEL SPREADSHEET -
ALTERNATIVE
ENDPOINT CALCULATION -SHOW FORMULAS

	D	E	F	G	H	I	J	K	L	M	N	O	P	Q	R	S	T	U	V	W	X	Y	Z
P200																							
P201	From Table III. Primary Area Bounding Endpoint Coordinates, Panels 1,2,3 and 4									From Table 14 panel 4 West - contunied Underground Layout													
P202	Underground Layoug Configuration (800-POC-MGR0-00100-000-00E)									Configuration for LA (800-KMC-SS00-00200-000-00Aa)													
P203																							
P204																							
P205																							
P206	Label	Northing meters	Easting meters	Elevation meters	Panel	Drift	Zone	Label	Northing meters	Easting meters	Side of Drift	Elevation meters	Delta Northing meters (ULCLA - ULC)	Delta Easting meters (ULCLA - ULC)	Delta Elevation meters (ULCLA - ULC)	Change Intended (Delta North Delta East only)	Calculated NORTHING meters	Calculated EASTING meters		Delta Northing meters Check Sum Post-change	Delta Easting meters Check Sum Post-change	Delta Elev meters Check Sum	
P207																							
P208																							
P209																							
P210																							
P211																							
P212	Panel 4-11	235068.48	170685.297	1050.535	4	11	East	Panel 4-11	235068.48	170685.297	East	1050.535	=+L212-E212	=+M212-F212	=+G212-O212	No	NO CHANGE	NO CHANGE					
P213		234886.501	170125.226	1050.535	4	11	West		234886.501	170125.226	West		=+L213-E213	=+M213-F213		No	NO CHANGE	NO CHANGE					
P214	Panel 4-12	234981.835	170680.756	1051.706	4	12	East	Panel 4-12	234981.835	170680.756	East	1051.706	=+L214-E214	=+M214-F214	=+G214-O214	No	NO CHANGE	NO CHANGE					
P215		234799.857	170120.686	1051.706	4	12	West		234799.856	170120.685	West		=+L215-E215	=+M215-F215		No	NO CHANGE	NO CHANGE					
P216	Panel 4-13	234895.191	170676.215	1052.877	4	13	East	Panel 4-13	234895.191	170676.215	East	1052.877	=+L216-E216	=+M216-F216	=+G216-O216	No	NO CHANGE	NO CHANGE					
P217		234713.213	170116.145	1052.877	4	13	West		234713.212	170116.144	West		=+L217-E217	=+M217-F217		No	NO CHANGE	NO CHANGE					
P218	Panel 4-14	234808.547	170671.674	1054.049	4	14	East	Panel 4-14	234808.547	170671.674	East	1054.049	=+L218-E218	=+M218-F218	=+G218-O218	No	NO CHANGE	NO CHANGE					
P219		234626.568	170111.604	1054.049	4	14	West		234626.568	170111.603	West		=+L219-E219	=+M219-F219		No	NO CHANGE	NO CHANGE					
P220	Panel 4-15	234721.902	170667.133	1055.22	4	15	East	Panel 4-15	234721.903	170667.133	East	1055.22	=+L220-E220	=+M220-F220	=+G220-O220	No	NO CHANGE	NO CHANGE					
P221		234539.924	170107.063	1055.22	4	15	West		234539.924	170107.062	West		=+L221-E221	=+M221-F221		No	NO CHANGE	NO CHANGE					
P222	Panel 4-16	234635.258	170662.592	1056.391	4	16	East	Panel 4-16	234635.258	170662.592	East	1056.391	=+L222-E222	=+M222-F222	=+G222-O222	No	NO CHANGE	NO CHANGE					
P223		234453.28	170102.522	1056.391	4	16	West		234453.279	170102.522	West		=+L223-E223	=+M223-F223		No	NO CHANGE	NO CHANGE					
P224	Panel 4-17	234548.614	170658.052	1057.563	4	17	East	Panel 4-17	234548.614	170658.052	East	1057.563	=+L224-E224	=+M224-F224	=+G224-O224	No	NO CHANGE	NO CHANGE					
P225		234366.636	170097.981	1057.563	4	17	West		234366.635	170097.981	West		=+L225-E225	=+M225-F225		No	NO CHANGE	NO CHANGE					
P226	Panel 4-18	234461.969	170653.511	1058.734	4	18	East	Panel 4-18	234461.969	170653.511	East	1058.734	=+L226-E226	=+M226-F226	=+G226-O226	No	NO CHANGE	NO CHANGE					
P227		234279.992	170093.441	1058.734	4	18	West		234279.992	170093.44	West		=+L227-E227	=+M227-F227		No	NO CHANGE	NO CHANGE					
P228	Panel 4-19	234375.325	170648.97	1059.905	4	19	East	Panel 4-19	234375.325	170648.97	East	1059.905	=+L228-E228	=+M228-F228	=+G228-O228	No	NO CHANGE	NO CHANGE					
P229		234193.347	170088.9	1059.905	4	19	West		234193.346	170088.899	West		=+L229-E229	=+M229-F229		No	NO CHANGE	NO CHANGE					
P230	Panel 4-20	234288.681	170644.429	1061.077	4	20	East	Panel 4-20	234288.681	170644.429	East	1061.077	=+L230-E230	=+M230-F230	=+G230-O230	No	NO CHANGE	NO CHANGE					
P231		234106.823	170084.731	1061.077	4	20	West		234106.823	170084.731	West		=+L231-E231	=+M231-F231		No	NO CHANGE	NO CHANGE					
P232	Panel 4-21	234202.036	170639.888	1062.248	4	21	East	Panel 4-21	234202.036	170639.888	East	1062.248	=+L232-E232	=+M232-F232	=+G232-O232	No	NO CHANGE	NO CHANGE					
P233		234023.727	170091.111	1062.248	4	21	West		234023.727	170091.111	West		=+L233-E233	=+M233-F233		No	NO CHANGE	NO CHANGE					
P234	Panel 4-22	234116.274	170635.061	1063.419	4	22	East	Panel 4-22	234115.392	170635.348	East	1063.419	=+L234-E234	=+M234-F234	=+G234-O234	Yes	=+E232-I6	=+F232-I7		=+L234-T234	=+M234-U234	=+IF(O234="","",O234-G234)	
P235		233940.912	170098.356	1063.419	4	22	West		233940.912	170098.356	West		=+L235-E235	=+M235-F235		No	NO CHANGE	NO CHANGE				=+IF(O235="","",O235-G235)	
P236	Panel 4-23	234036.38	170654.237	1064.59	4	23	East	Panel 4-23	234028.748	170630.807	East	1064.59	=+L236-E236	=+M236-F236	=+G236-O236	Yes	=+T234-I6	=+U234-I7		=+L236-T236	=+M236-U236	=+IF(O236="","",O236-G236)	
P237		233858.098	170105.601	1064.59	4	23	West		233858.098	170105.601	West		=+L237-E237	=+M237-F237		No	NO CHANGE	NO CHANGE				=+IF(O237="","",O237-G237)	
P238	Panel 4-24	233949.716	170649.696	1065.762	4	24	East	Panel 4-24	233942.103	170626.266	East	1065.762	=+L238-E238	=+M238-F238	=+G238-O238	Yes	=+T236-I6	=+U236-I7		=+L238-T238	=+M238-U238	=+IF(O238="","",O238-G238)	
P239		233775.283	170112.847	1065.762	4	24	West		233775.283	170112.847	West		=+L239-E239	=+M239-F239		No	NO CHANGE	NO CHANGE				=+IF(O239="","",O239-G239)	
P240	Panel 4-25	233863.071	170645.156	1066.933	4	25	East	Panel 4-25	233855.459	170621.725	East	1066.933	=+L240-E240	=+M240-F240	=+G240-O240	Yes	=+T238-I6	=+U238-I7		=+L240-T240	=+M240-U240	=+IF(O240="","",O240-G240)	
P241		233692.467	170120.092	1066.933	4	25	West		233692.467	170120.092	West		=+L241-E241	=+M241-F241		No	NO CHANGE	NO CHANGE				=+IF(O241="","",O241-G241)	
P242	Panel 4-26	233778.427	170640.615	1068.105	4	26	East	Panel 4-26	233768.814	170617.184	East	1068.105	=+L242-E242	=+M242-F242	=+G242-O242	Yes	=+T240-I6	=+U240-I7		=+L242-T242	=+M242-U242	=+IF(O242="","",O242-G242)	
P243		233609.653	170127.338	1068.104	4	26	West		233609.663	170127.338	West		=+L243-E243	=+M243-F243		No	NO CHANGE	NO CHANGE				=+IF(O243="","",O243-G243)	
P244	Panel 4-27	233689.782	170636.074	1069.276	4	27	East	Panel 4-27	233682.17	170612.644	East	1069.276	=+L244-E244	=+M244-F244	=+G244-O244	Yes	=+T242-I6	=+U242-I7		=+L244-T244	=+M244-U244	=+IF(O244="","",O244-G244)	
P245		233526.841	170134.594	1069.276	4	27	West		233526.841	170134.594	West		=+L245-E245	=+M245-F245		No	NO CHANGE	NO CHANGE				=+IF(O245="","",O245-G245)	
P246	Panel 4-28	233606.914	170630.076	1070.447	4	28	East	Panel 4-28	233596.526	170608.103	East	1070.447	=+L246-E246	=+M246-F246	=+G246-O246	Yes	=+T244-I6	=+U244-I7		=+L246-T246	=+M246-U246	=+IF(O246="","",O246-G246)	
P247		233448.442	170155.429	1070.447	4	28	West		233448.442	170155.429	West		=+L247-E247	=+M247-F247		No	NO CHANGE	NO CHANGE				=+IF(O247="","",O247-G247)	
P248	Panel 4-29	233526.916	170659.069	1071.618	4	29	East	Panel 4-29	233508.881	170603.562	East	1071.618	=+L248-E248	=+M248-F248	=+G248-O248	Yes	=+T246-I6	=+U246-I7		=+L248-T248	=+M248-U248	=+IF(O248="","",O248-G248)	
P249		233378.792	170203.192	1071.618	4	29	West		233378.792	170203.192	West		=+L249-E249	=+M249-F249		No	NO CHANGE	NO CHANGE				=+IF(O249="","",O249-G249)	
P250	Panel 4-30	233442.259	170660.845	1072.79	4	30	East	Panel 4-30	233422.007	170598.316	East	1072.79	=+L250-E250	=+M250-F250	=+G250-O250	Yes	=+T248-I6	=+U248-I7		=+L250-T250	=+M250-U250	=+IF(O250="","",O250-G250)	C Diff <1 m verified by inspection
P251		233321.782	170289.858	1072.79	4	30	West		233321.782	170289.858	West		=+L251-E251	=+M251-F251		No	NO CHANGE	NO CHANGE				=+IF(O251="","",O251-G251)	
P252																							
P253																							
P254																							
P255																							
P256																							

VI-19

EXCEL SPREADSHEET -
ALTERNATIVE
ENDPOINT CALCULATION -SHOW FORMULAS

From Table III. Primary Area Bounding Endpoint Coordinates, Panels 1,2,3 and 4

From Table II panel 4 West - contunied Undergrround Layout Configuration for LA (800-KMC-SS00-00200-000-

Underground Layoug Configuration (800-PGC-MGR0-00100-000-00E)

	D	E	F	G	H	I	J	K	L	M	N	O	P	Q	R	S	T	U	V	W	X	Y	Z
261	Label	Northing meters	Easting meters	Elevation meters	Panel	Drift	Zone	Label	Northing meters	Easting meters	Side of Drift	Elevation meters	Delta Northing meters (ULCLA - ULC)	Delta Easting meters (ULCLA - ULC)	Delta Elevation meters (ULCLA - ULC)	Change Intended (Delta North Delta East only)	Calculated NORTHING meters	Calculated EASTIING meters		Delta Northing meters Check Sum	Delta Easting meters Check Sum	Delta Elev meters Check Sum	
267	Panel 2-1	233366.199	171212.931	1076.304	2	1	East	Panel 2-1	233366.199	171212.931	East	1076.304	=+L267-E267	=+M267-F267	=+G267-O267	No	NO CHANGE	NO CHANGE					
268		233130.468	170847.425	1076.304	2	1	West		233130.468	170847.425	West		=+L268-E268	=+M268-F268		yes	=+E270+I6	=+F270+I7		=+L268-T268	=+M268-U268	=+IF(O268="","",O268-G268)	
269	Panel 2-2	233276.555	171208.39	1077.476	2	2	East	Panel 2-2	233276.555	171208.39	East	1077.476	=+L269-E269	=+M269-F269	=+G269-O269	No	NO CHANGE	NO CHANGE					
270		233043.824	170482.884	1077.476	2	2	West		233043.824	170482.884	West		=+L270-E270	=+M270-F270		No	NO CHANGE	NO CHANGE					
271	Panel 2-3	233192.91	171203.849	1078.647	2	3	East	Panel 2-3	233192.91	171203.849	East	1078.647	=+L271-E271	=+M271-F271	=+G271-O271	No	NO CHANGE	NO CHANGE					
272		232957.408	170478.049	1078.647	2	3	West		232957.408	170478.049	West		=+L272-E272	=+M272-F272		No	NO CHANGE	NO CHANGE					
273	Panel 2-4	233106.266	171199.308	1079.818	2	4	East	Panel 2-4	233106.266	171199.308	East	1079.818	=+L273-E273	=+M273-F273	=+G273-O273	No	NO CHANGE	NO CHANGE					
274		232871.754	170477.554	1079.818	2	4	West		232871.754	170477.554	West		=+L274-E274	=+M274-F274		No	NO CHANGE	NO CHANGE					
275	Panel 2-5	233019.921	171194.767	1080.99	2	5	East	Panel 2-5	233019.921	171194.767	East	1080.99	=+L275-E275	=+M275-F275	=+G275-O275	No	NO CHANGE	NO CHANGE					
276		232786.099	170476.058	1080.99	2	5	West		232786.099	170476.058	West		=+L276-E276	=+M276-F276		No	NO CHANGE	NO CHANGE					
277	Panel 2-6	232932.977	171190.226	1082.161	2	6	East	Panel 2-6	232932.977	171190.226	East	1082.161	=+L277-E277	=+M277-F277	=+G277-O277	No	NO CHANGE	NO CHANGE					
278		232700.444	170474.563	1082.161	2	6	West		232700.444	170474.563	West		=+L278-E278	=+M278-F278		No	NO CHANGE	NO CHANGE					
279	Panel 2-7	232846.332	171185.686	1083.332	2	7	East	Panel 2-7	232846.332	171185.686	East	1083.332	=+L279-E279	=+M279-F279	=+G279-O273	No	NO CHANGE	NO CHANGE					
280		232614.789	170473.068	1083.332	2	7	West		232614.789	170473.068	West		=+L280-E280	=+M280-F280		No	NO CHANGE	NO CHANGE					
281	Panel 2-8	232756.688	171181.145	1084.504	2	8	East	Panel 2-8	232756.688	171181.145	East	1084.504	=+L281-E281	=+M281-F281	=+G281-O281	No	NO CHANGE	NO CHANGE					
282		232529.134	170471.573	1084.504	2	8	West		232529.134	170471.573	West		=+L282-E282	=+M282-F282		No	NO CHANGE	NO CHANGE					
283	Panel 2-9	232673.043	171178.604	1085.675	2	9	East	Panel 2-9	232673.043	171178.604	East	1085.675	=+L283-E283	=+M283-F283	=+G283-O281	No	NO CHANGE	NO CHANGE					
284		232443.479	170470.078	1085.675	2	9	West		232443.479	170470.078	West		=+L284-E284	=+M284-F284		No	NO CHANGE	NO CHANGE					
285	Panel 2-10	232586.399	171172.063	1086.847	2	10	East	Panel 2-10	232586.399	171172.063	East	1086.847	=+L285-E285	=+M285-F285	=+G285-O281	No	NO CHANGE	NO CHANGE					
286		232357.824	170468.583	1086.847	2	10	West		232357.824	170468.583	West		=+L286-E286	=+M286-F286		No	NO CHANGE	NO CHANGE					
287	Panel 2-11	232499.755	171167.522	1088.018	2	11	East	Panel 2-11	232499.755	171167.522	East	1088.018	=+L287-E287	=+M287-F287	=+G287-O281	No	NO CHANGE	NO CHANGE					
288		232273.136	170470.061	1088.018	2	11	West		232273.136	170470.061	West		=+L288-E288	=+M288-F288		No	NO CHANGE	NO CHANGE					
289	Panel 2-12	232413.11	171162.961	1089.189	2	12	East	Panel 2-12	232413.11	171162.961	East	1089.189	=+L289-E289	=+M289-F289	=+G289-O281	No	NO CHANGE	NO CHANGE					
290		232168.446	170471.539	1089.189	2	12	West		232168.446	170471.539	West		=+L290-E290	=+M290-F290		No	NO CHANGE	NO CHANGE					
291	Panel 2-13	232326.465	171158.44	1090.361	2	13	East	Panel 2-13	232326.465	171158.44	East	1090.361	=+L291-E291	=+M291-F291	=+G291-O291	No	NO CHANGE	NO CHANGE					
292		232103.758	170473.018	1090.361	2	13	West		232103.758	170473.018	West		=+L292-E292	=+M292-F292		No	NO CHANGE	NO CHANGE					
293	Panel 2-14	232239.921	171153.9	1091.532	2	14	East	Panel 2-14	232239.921	171153.9	East	1091.532	=+L293-E293	=+M293-F293	=+G293-O293	No	NO CHANGE	NO CHANGE					
294		232019.069	170474.496	1091.532	2	14	West		232019.069	170474.496	West		=+L294-E294	=+M294-F294		No	NO CHANGE	NO CHANGE					
295	Panel 2-15	232153.176	171149.359	1092.703	2	15	East	Panel 2-15	232153.176	171149.359	East	1092.703	=+L295-E295	=+M295-F295	=+G295-O293	No	NO CHANGE	NO CHANGE					
296		231934.38	170475.974	1092.703	2	15	West		231934.38	170475.974	West		=+L296-E296	=+M296-F296		No	NO CHANGE	NO CHANGE					
297	Panel 2-16	232066.531	171144.818	1093.875	2	16	East	Panel 2-16	232066.531	171144.818	East	1093.875	=+L297-E297	=+M297-F297	=+G297-O297	No	NO CHANGE	NO CHANGE					
298		231849.692	170477.452	1093.875	2	16	West		231849.692	170477.452	West		=+L298-E298	=+M298-F298		No	NO CHANGE	NO CHANGE					
299	Panel 2-17	231979.867	171140.277	1095.046	2	17	East	Panel 2-17	231979.867	171140.277	East	1095.046	=+L299-E299	=+M299-F299	=+G299-O299	No	NO CHANGE	NO CHANGE					
300		231765.002	170478.931	1095.046	2	17	West		231765.002	170478.931	West		=+L300-E300	=+M300-F300		No	NO CHANGE	NO CHANGE					
301	Panel 2-18	231893.243	171135.736	1096.218	2	18	East	Panel 2-18	231893.243	171135.736	East	1096.218	=+L301-E301	=+M301-F301	=+G301-O301	No	NO CHANGE	NO CHANGE					
302		231681.102	170482.833	1096.218	2	18	West		231681.102	170482.833	West		=+L302-E302	=+M302-F302		No	NO CHANGE	NO CHANGE					
303	Panel 2-19	231806.598	171131.195	1097.389	2	19	East	Panel 2-19	231806.598	171131.195	East	1097.389	=+L303-E303	=+M303-F303	=+G303-O301	No	NO CHANGE	NO CHANGE					
304		231597.515	170487.704	1097.389	2	19	West		231597.515	170487.704	West		=+L304-E304	=+M304-F304		No	NO CHANGE	NO CHANGE					
305	Panel 2-10	231719.953	171126.654	1098.56	2	20	East	Panel 2-10	231719.953	171126.654	East	1098.56	=+L305-E305	=+M305-F305	=+G305-O305	No	NO CHANGE	NO CHANGE					
306		231513.079	170489.959	1098.56	2	20	West		231513.079	170489.959	West		=+L306-E306	=+M306-F306		No	NO CHANGE	NO CHANGE					
307	Panel 2-21	231633.309	171122.114	1099.732	2	21	East	Panel 2-21	231633.309	171122.114	East	1099.732	=+L307-E307	=+M307-F307	=+G307-O301	No	NO CHANGE	NO CHANGE					
308		231427.892	170489.905	1099.732	2	21	West		231427.892	170489.905	West		=+L308-E308	=+M308-F308		No	NO CHANGE	NO CHANGE					
309	Panel 2-22	231546.664	171117.573	1100.903	2	22	East	Panel 2-22	231546.664	171117.573	East	1100.903	=+L309-E309	=+M309-F309	=+G309-O309	No	NO CHANGE	NO CHANGE					
310		231341.922	170487.44	1100.903	2	22	West		231341.922	170487.44	West		=+L310-E310	=+M310-F310		No	NO CHANGE	NO CHANGE					
311	Panel 2-23	231460.02	171113.032	1102.074	2	23	East	Panel 2-23	231460.02	171113.032	East	1102.074	=+L311-E311	=+M311-F311	=+G311-O311	No	NO CHANGE	NO CHANGE					
312		231256.87	170487.8	1102.074	2	23	West		231256.87	170487.8	West		=+L312-E312	=+M312-F312		No	NO CHANGE	NO CHANGE					
313	Panel 2-24	231373.375	171108.491	1103.246	2	24	East	Panel 2-24	231373.375	171108.491	East	1103.246	=+L313-E313	=+M313-F313	=+G313-O312	No	NO CHANGE	NO CHANGE					
314		231172.181	170489.278	1103.246	2	24	West		231172.181	170489.278	West		=+L314-E314	=+M314-F314		No	NO CHANGE	NO CHANGE					
315	Panel 2-25	231286.731	171103.95	1104.417	2	25	East	Panel 2-25	231286.731	171103.95	East	1104.417	=+L315-E315	=+M315-F315	=+G315-O315	No	NO CHANGE	NO CHANGE					
316		231089.313	170496.36	1104.417	2	25	West		231089.313	170496.36	West		=+L316-E316	=+M316-F316		No	NO CHANGE	NO CHANGE					
317	Panel 2-26	231188.179	171062.762	1105.589	2	26	East	Panel 2-26	231188.179	171062.762	East	1105.589	=+L317-E317	=+M317-F317	=+G317-O317	No	NO CHANGE	NO CHANGE					
318		231013.008	170523.641	1105.589	2	26	West		231013.008	170523.641	West		=+L318-E318	=+M318-F318		No	NO CHANGE	NO CHANGE					
319	Panel 2-27	231088.605	171018.429	1106.76	2	27	East	Panel 2-27	231088.605	171018.429	East	1106.76	=+L319-E319	=+M319-F319	=+G319-O319	No	NO CHANGE	NO CHANGE					
320		230943.765	170572.657	1106.76	2	27	West		230943.765	170572.657	West		=+L320-E320	=+M320-F320		No	NO CHANGE	NO CHANGE					

Underground Layout Configuration for LA
800-KMC-SS00-00200-000-00A B
TL 7/27/07
~~TL 7/16/07~~

VI-20

ATTACHMENT VII
ELECTRONIC MICROSTATION FILES

The electronic file of the underground layout that has been developed in MicroStation (Section 4.2.2) for this calculation is on the CD that has been included in the record package.

The file is the centerline, two-dimensional representation of the Underground Layout Configuration for LA developed in metric units.

Table VII-1. MicroStation Files on CD

File	Description	File size	Date & Time
BoundaryGridAll Rev B.dgn	Coordinates	27KB	7/16/2007 9:59 AM
ESF ECRB Exist.dgn	Existing excavation	55KB	7/16/2007 9:09 AM
Panel 1 CLs Rev B.dgn	Panel 1	30KB	7/16/2007 10:00 AM
Panel 2 CLs Rev B.dgn	Panel 2	35KB	7/16/2007 10:00 AM
Panel 3 CLs Rev B.dgn	Panel 3	94KB	7/16/2007 10:00 AM
Panel 4 CLs Rev B.dgn	Panel 4	36KB	7/16/2007 10:00 AM