ELECTRIC POWER RESEARCH INSTITUTE

Weld Inlay/Onlay Update

Carl Latiolais
Senior Program Manager

Appendix VIII Performance Demonstration

Status

- Inlay Status
  - Demonstrations conducted with 2 vendors
    - Completed letter report to PWROG
      - Equivalency established
      - Main Loop RPV
  - Technical update report complete
    - Ultrasonic Equivalency Testing of Weld Inlaid Components – 1016543
    - Report issued to NRC
  - Drafting code changes
    - Working with pilot plant on development of relief request for use (DC Cook/AREVA)
      - Changes included in CC-770
      - DC Cook Planning for Fall 2009
      - Many others interested

© 2008 Electric Power Research Institute, Inc. All rights reserved.

Status

- Expanding project to include Onlay applications
  - ANO had immediate need for support of onlay application for Core flood nozzles (Sept 2008 application) (Complete)
    - Coordinated with PWROG
      - Modified existing core flood mock-ups (Complete)
        - One to address onlay and show equivalency
        - Second to address UT in lieu of RT if needed
    - Vendor Demonstrations on Onlay configuration (Complete)
      - Facilitated demonstrations and documented results – (Complete)
      - Developed of TJ – (Complete)
      - Supports Code Case N-770
- Technical Update revised which includes onlay work - (New report to be published by mid Dec. 2008)
- Public meeting held in Washington DC 9/15/2008
  - Included overview of Inlay, onlay and laser welding technologies

© 2008 Electric Power Research Institute, Inc. All rights reserved.

ANO Onlay Design

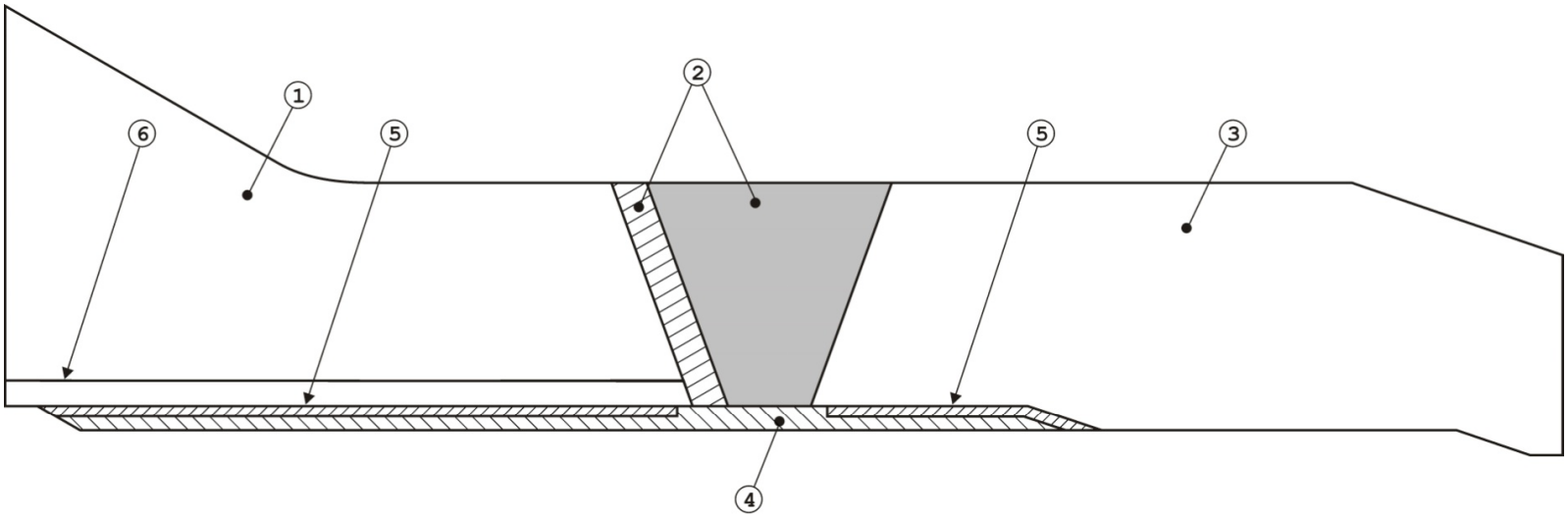

PARTS LIST		MATERIALS
1.	NOZZLE FORGING	A-508 CL.2
2.	WELD/BUTTER	ALLOY 82/182
3.	SAFE-END	SA-336 GR.F8M
4.	WELD ONLAY	ALLOY 52M
5.	BUFFER LAYER	ER308L
6.	CLADDING	ER308L

© 2008 Electric Power Research Institute, Inc. All rights reserved.

ELECTRIC POWER RESEARCH INSTITUTE

DC Cook Preliminary Inlay Design

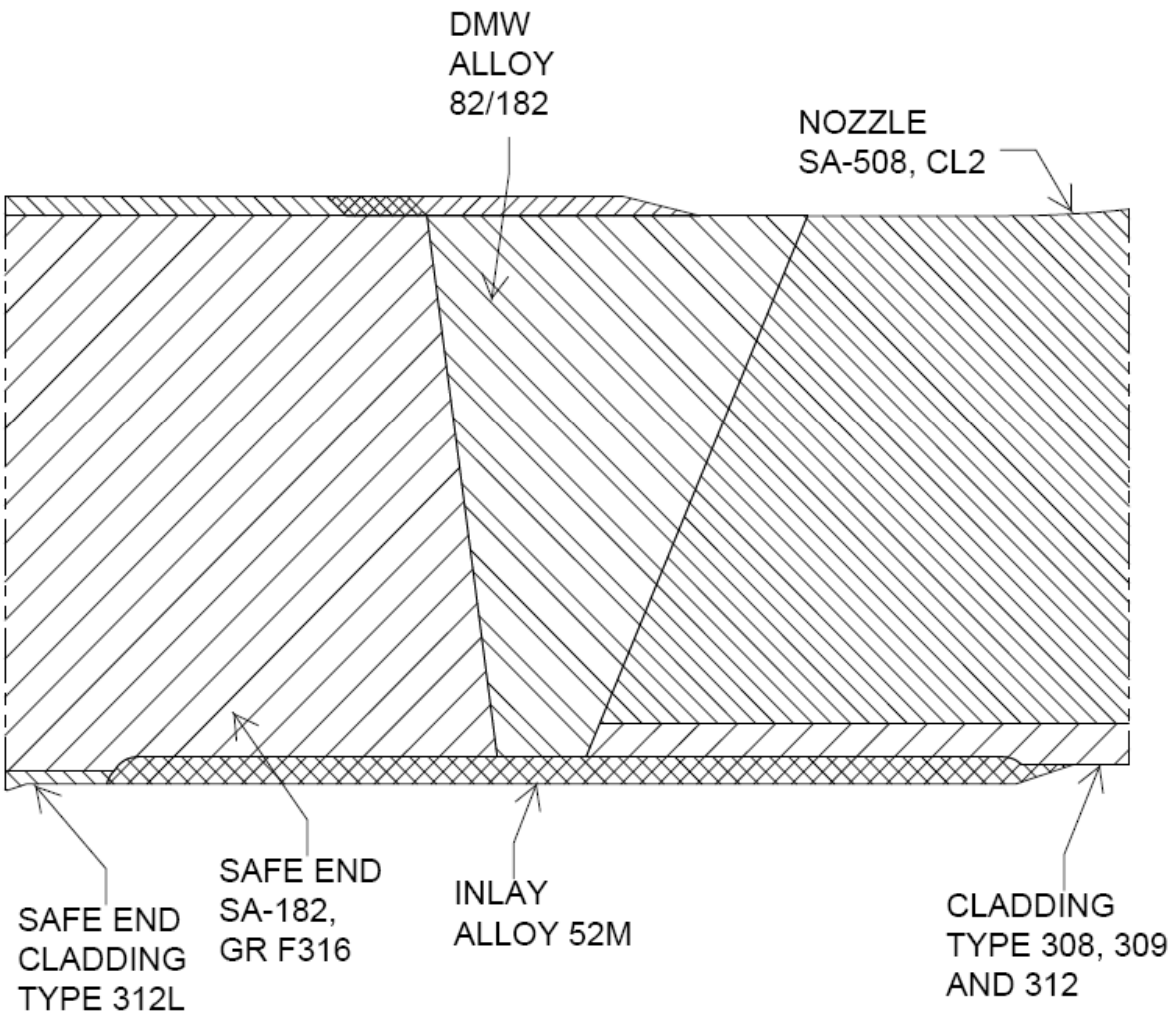

© 2008 Electric Power Research Institute, Inc. All rights reserved.

ELECTRIC POWER RESEARCH INSTITUTE