ELECTRIC POWER RESEARCH INSTITUTE

PDI/NRC Meeting

December 2 - 3, 2008

Code Update

Mike Gothard
Senior Project Manager

10CFR50.55a

New Rule

- A final rule was published in the *Federal Register* [73 FR 52730] on September 8, 2008, incorporating Section III and Section XI of the 2004 Edition of the American Society of Mechanicals Engineers (ASME) Boiler and Pressure Vessel Code into Title 10, Part 50.55a, of the Code of Federal Regulations (10 CFR 50.55a).

- Impact to PDI – No change
  - (xv) *Appendix VIII specimen set and qualification requirements*. The following provisions may be used to modify implementation of Appendix VIII of Section XI, 1995 Edition through the 2001 Edition. Licensees choosing to apply these provisions shall apply all of the following provisions under this paragraph except for those in § 50.55a(b)(2)(xv)(F) which are optional. Licensees who use later editions and addenda than the 2001 Edition of the ASME Code shall use the 2001 Edition of Appendix VIII.

© 2008 Electric Power Research Institute, Inc. All rights reserved.

10CFR50.55a

New Rule (continued)

- Code Cases N–722, "Additional Examinations for PWR [pressurized water reactor (PWR)] Pressure Retaining Welds in Class 1 Components Fabricated with Alloy 600/82/182 Materials, Section XI, Division 1," and N–729–1, "Alternative Examination Requirements for PWR Reactor Vessel Upper Heads With Nozzles Having Pressure-Retaining Partial-Penetration Welds, Section XI, Division 1," were also incorporated by reference but with conditions. The effective date of the rule was October 10, 2008.

- Impact
  - Relief can't be sought via paragraph (g) – impractical
  - Relief is sought via (a)(3) - hardship or unusual difficulty
  - Augmented Inspection

© 2008 Electric Power Research Institute, Inc. All rights reserved.

Weld Overlay Code Cases

Brief History

- Code Case N-504, Revisions1/2/3 and Non-mandatory Appendix Q – Weld Overlay Repair of Class 1, 2, and 3 Austenitic Stainless steel Piping Welds
- Case N-740, Revisions 1/2 - Full Structural Dissimilar Metal Weld Overlay for Repair or Mitigation of Class 1, 2, and 3 Items

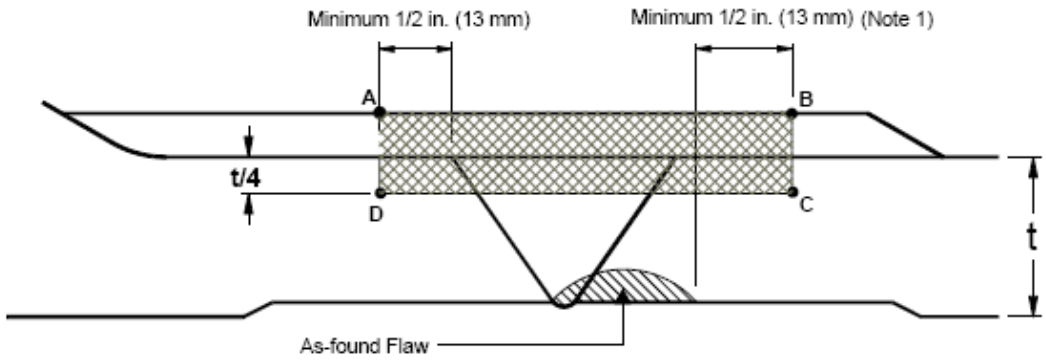

Examination Volume A-B-C-D

© 2008 Electric Power Research Institute, Inc. All rights reserved.

ELECTRIC POWER RESEARCH INSTITUTE

Weld Overlay Code Cases

Proposed Code Case N-770

- Alternative Examination Requirements and Acceptance Standards for Class 1 PWR Piping and Vessel Nozzle Butt Welds Fabricated with UNS N06082 or UNS W86182 Weld Filler Material With or Without the Application of Listed Mitigation Activities, Section XI, Division 1
- Approved at SC XI - 11/13/08
- Applicable for optimized weld overlay (OWOL)

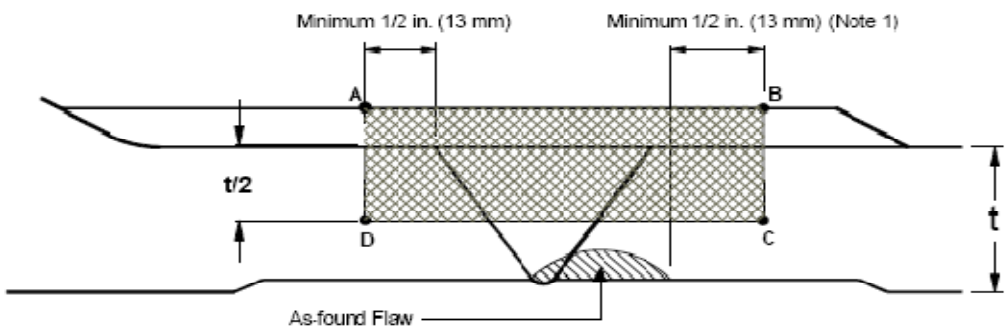

Examination Volume A-B-C-D

© 2008 Electric Power Research Institute, Inc. All rights reserved.

ELECTRIC POWER RESEARCH INSTITUTE

Weld Overlay Code Cases

NDE Problems with N-770

- Difficulty in locating axial flaws at 50% t
- If unable to resolve:
  - Can’t get relief from a Code Case, it’s already an alternative
  - Resolution
    - Apply full structural overlay
    - Propose another alternative that omits issues of noncompliance

© 2008 Electric Power Research Institute, Inc. All rights reserved.

Weld Overlay Code Cases

Proposed Code Case N-754

- Optimized Structural Dissimilar Metal Weld Overlay Used for Mitigation of Class 1, 2, and 3 Items
- Still at Working Group
  - Axial flaw Proposal

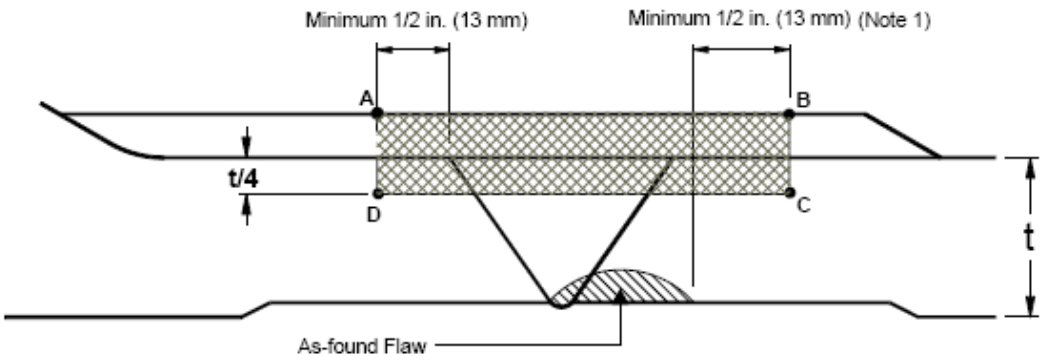

Examination Volume A-B-C-D

© 2008 Electric Power Research Institute, Inc. All rights reserved.

ELECTRIC POWER RESEARCH INSTITUTE

Weld Overlay Code Cases

NDE Problems with N-754

- Sizing of Embedded Flaws

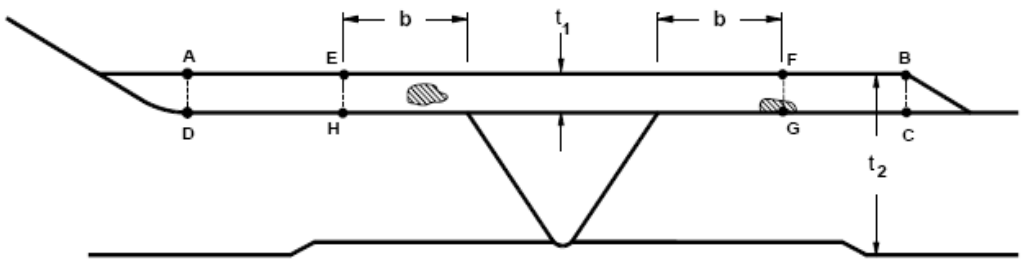

© 2008 Electric Power Research Institute, Inc. All rights reserved.

ELECTRIC POWER RESEARCH INSTITUTE

Weld Overlay Code Cases

NDE Problems with N-754 (continued)

- Locating Circumferential flaws 50% t in the center of the weld

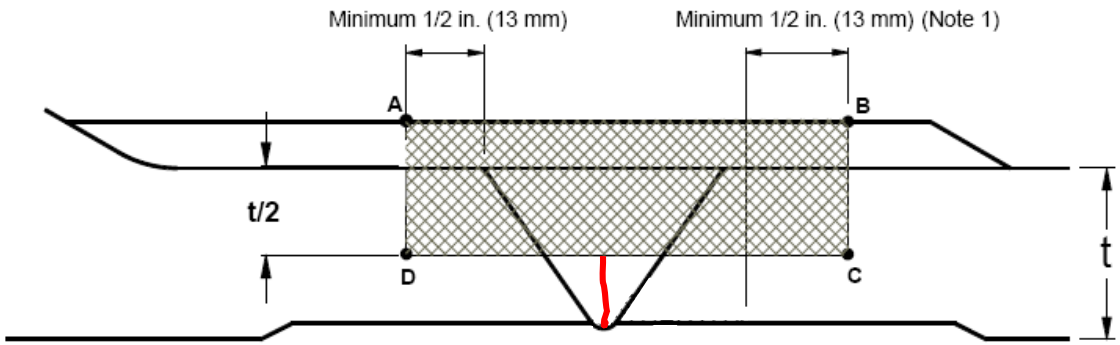

Examination Volume A-B-C-D

© 2008 Electric Power Research Institute, Inc. All rights reserved.

ELECTRIC POWER RESEARCH INSTITUTE

Weld Overlay Code Cases

Future Plans

- Incorporate CC N-754 into CC N-770

© 2008 Electric Power Research Institute, Inc. All rights reserved.

PDI/NRC Meeting
December 2 - 3, 2008

Equipment Substitution

Grady Lagleder
President, IHI Southwest Technologies

EPRI ELECTRIC POWER RESEARCH INSTITUTE

Objective

- Development of a Code Case to provide rules for substitution or replacement of equipment in previously qualified procedures

© 2008 Electric Power Research Institute, Inc. All rights reserved.

Why??

Equipment and components become obsolete every 3-5 years, even faster for some digital components

PDI rules currently tie Mfg/Model to procedures so if Model number is changed, usability is lost

Current rules require either:

- requalification (expensive, possibility of human error in blind test) or
- Appendix VIII, Supplement 1 immersion test analysis of center frequency/bandwidth (difficult to perform and/or not even feasible depending on type of equipment)

© 2008 Electric Power Research Institute, Inc. All rights reserved.

The Premise

Qualified UT systems consist of Personnel, Procedures, and Equipment

Of these, the least variable is equipment (particularly digital equipment, which either works or doesn't work). The most variable is personnel (emotions, confidence, training, etc., etc., etc.)

If personnel and procedural variables are removed (or held constant), equipment substitution should be simply a matter of determining equivalency

© 2008 Electric Power Research Institute, Inc. All rights reserved.

Basic Requirements

- Limited to Equipment that performs the same function as the original
- Procedural “technique” elements (probe designs, scanning parameters, calibration/analysis processes) remain unchanged
- A Technical Justification to document the change
- A limited Equivalency Demonstration to provide empirical evidence
- An independent evaluation (PDA) to validate equivalency

© 2008 Electric Power Research Institute, Inc. All rights reserved.

Current Issues

- How extensive must the equivalency demonstration be?

- What are acceptable methods for measuring equivalency?

© 2008 Electric Power Research Institute, Inc. All rights reserved.