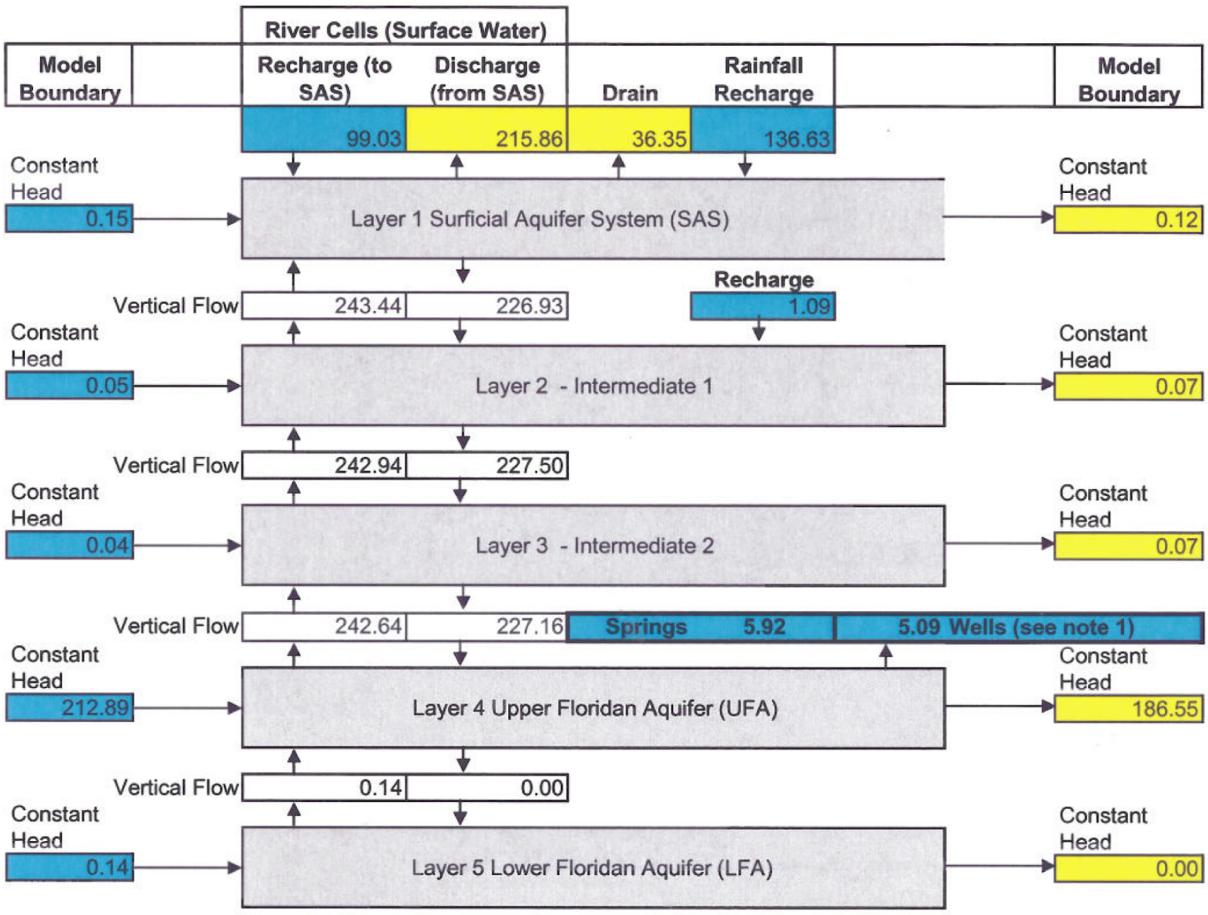

Note 1: Well withdrawal comprised of 3.51 mgd from other users (model calibration year 2001) + 1.58 mgd for LNP

Inflow	Outflow	Difference	% Difference
450.03	450.03	0.00	0.00%

NOTE: ALL VALUES MGD

Progress Energy Florida

Levy Nuclear Plant
Units 1 and 2

SWFWMD DWRM2 TMR
TMR Model Water Budget
with LNP withdrawing 1.58 mgd
FIGURE H-29 Rev 0