US-APWR DCD RAI Tracking Report

March 2009

Ⓒ2009 Mitsubishi Heavy Industries, Ltd.
All Rights Reserved

Revision History

Revision	Page	Description
0	All	Original issued

© 2009
MITSUBISHI HEAVY INDUSTRIES, LTD.
All Rights Reserved

This document has been prepared by Mitsubishi Heavy Industries, Ltd. ("MHI") in connection with the U.S. Nuclear Regulatory Commission's ("NRC") licensing review of MHI's US-APWR nuclear power plant design. No right to disclose, use or copy any of the information in this document, other than by the NRC and its contractors in support of the licensing review of the US-APWR, is authorized without the express written permission of MHI.

This document contains technology information and intellectual property relating to the US-APWR and it is delivered to the NRC on the express condition that it not be disclosed, copied or reproduced in whole or in part, or used for the benefit of anyone other than MHI without the express written permission of MHI, except as set forth in the previous paragraph.
This document is protected by the laws of Japan, U.S. copyright law, international treaties and conventions, and the applicable laws of any country where it is being used.

Mitsubishi Heavy Industries, Ltd.
16-5, Konan 2-chome, Minato-ku
Tokyo 108-8215 Japan

General Description

This report includes a table that identifies the impact of each response to the Request for Additional Information ("RAI") relative to the Design Control Document ("DCD") of US-APWR. The report also includes the DCD markups for the RAI responses that impacted the DCD. The related "Change ID Number" shown in the table is addressed in the corner on the right of each sheet of the DCD markups.

Notes

This report includes RAI responses that were submitted through January 9, 2009 for Chapter 2, 3, 5, 8, 12, 13, 14, 15 and 16. An updated report which will includes all RAI responses by chapter submitted through February 28, 2009 will be transmitted in early April.

Chapter:2

Section		DCD RAI Response							Other Drivers	Change ID Number for DCD forthcoming Revision	DCD Tracking Report Revision	DCD Revision
No.	Title	RAI No.	Question No.	Response Date	Impact on DCD	Impact on COLA	Impact on PRA	Response Status				
2.2.3	Evaluation of Potential Accidents											
2.3.1	Regional Climatology	23	02.03.01-1	2008/7/18	Y	N	N	fin.	-	DCD_02.03.01-1	-	1
		23	02.03.01-2	2008/7/18	Y	N	N	fin.	-	DCD_02.03.01-2	-	1
		23	02.03.01-3	2008/7/18	Y	N	N	fin.	-	DCD_02.03.01-3	-	1
		23	02.03.01-4	2008/7/18	Y	N	N	fin.	-	DCD_02.03.01-4	-	1
		23	02.03.01-5	2008/7/18	Y	N	N	fin.	-	DCD_02.03.01-5	-	1
		23	02.03.01-6	2008/7/18	Y	N	N	fin.	-	DCD_02.03.01-6	-	1
		23	02.03.01-7	2008/7/18	Y	N	N	fin.	-	DCD_02.03.01-7	-	1
		23	02.03.01-8	2008/7/18	Y	N	N	fin.	-	DCD_02.03.01-8	-	1
		23	02.03.01-9	2008/7/18	N	N	N	fin.	-	-	N/A	N/A
		23	02.03.01-10	2008/7/18	Y	N	N	fin.	-	DCD_02.03.01-10	-	1
		23	02.03.01-11	2008/7/18	Y	N	N	fin.	-	DCD_02.03.01-11	-	1
		23	02.03.01-12	2008/7/18	Y	N	N	fin.	-	DCD_02.03.01-12	-	1
		23	02.03.01-13	2008/7/18	N	N	N	fin.	-	-	N/A	N/A
		23	02.03.01-14	2008/7/18	N	N	N	fin.	-	-	N/A	N/A
		41	02.03.01-15	2008/9/12	Y	N	N	fin.	-	DCD_02.03.01-15	-	1
		59	02.03.01-16	2008/9/10	Y	N	N	fin.	-	DCD_02.03.01-16	0	2
2.3.2	Local Metereology	22	02.03.02-1	2008/7/18	Y	N	N	fin.	-	DCD_02.03.02-1	-	1
		22	02.03.02-2	2008/7/18	N	N	N	fin.	-	-	N/A	N/A

Chapter:2

Section		DCD RAI Response							Other Drivers	Change ID Number for DCD forthcoming Revision	DCD Tracking Report Revision	DCD Revision
No.	Title	RAI No.	Question No.	Response Date	Impact on DCD	Impact on COLA	Impact on PRA	Response Status				
2.3.3	Onsite Metereological	21	02.03.03-1	2008/7/18	Y	N	N	fin.	-	DCD_02.03.03-2	-	1
	Measurement Programs	21	02.03.03-2	2008/7/18	N	N	N	fin.	-	-	N/A	N/A
2.3.4	Short-term Dispersion Estimates	42	02.03.04-1	2008/9/10	Y	N	N	fin.	-	DCD_02.03.04-1	0	2
	for Accident Releases	42	02.03.04-2	2008/9/10	Y	N	N	fin.	-	DCD_02.03.04-2	0	2
		42	02.03.04-3	2008/9/10	N	N	N	fin.	-	-	N/A	N/A
		42	02.03.04-4	2008/9/10	Y	N	N	fin.	-	DCD_02.03.04-4	0	2
		43	02.03.04-5	2008/9/10	Y	Y	N	fin.	-	DCD_02.03.04-5	0	2
2.3.5	Long-Term Atmospheric Dispersion	44	02.03.05.-1	2008/9/10	Y	N	N	fin.	-	DCD_02.03.05-1	0	2
	Estimates for Routine Releases											
2.4	Hydrology	13	02.04-1	2008/7/18	Y	N	N	fin.	-	DCD_0.2.04-1	-	1
		13	02.04-2	2008/7/18	Y	N	N	fin.	-	DCD_0.2.04-2	-	1

Chapter:2

Section		DCD RAI Response							Other Drivers	Change ID Number for DCD forthcoming Revision	DCD Tracking Report Revision	DCD Revision
No.	Title	RAI No.	Question No.	Response Date	Impact on DCD	Impact on COLA	Impact on PRA	Response Status				
2.4.1	Hydrologic Description	14	02.04.01-1	2008/7/18	Y	N	N	fin.	-	DCD_0.2.04.01-1	-	1
		14	02.04.01-2	2008/7/18	Y	N	N	fin.	-	DCD_0.2.04.01-2	-	1
2.4.2	Floods											
2.4.3	Probable Maximum Flood (PMF) on Streams and Rivers											
2.4.4	Potential Dam Failures	15	02.04.04-1	2008/7/18	Y	N	N	fin.	-	DCD_02.04.04-1	-	1
		15	02.04.04-2	2008/7/18	Y	N	N	fin.	-	DCD_02.04.04-2	-	1
2.4.5	Probable Maximum Surge and Seiche Flooding	16	02.04.05-1	2008/7/18	Y	N	N	fin.	-	DCD_02.04.05-1	-	1
2.4.6	Probable Maximum	17	02.04.06-1	2008/7/18	Y	N	N	fin.	-	DCD_02.04.06-1	-	1

Chapter:2

Section		DCD RAI Response							Other Drivers	Change ID Number for DCD forthcoming Revision	DCD Tracking Report Revision	DCD Revision
No.	Title	RAI No.	Question No.	Response Date	Impact on DCD	Impact on COLA	Impact on PRA	Response Status				
	Tsunami Hazards	17	02.04.06-2	2008/7/18	Y	N	N	fin.	-	DCD_02.04.06-2	-	1
2.4.7	Ice Effects											
2.4.8	Cooling Water Canals and Reservoirs											
2.4.9	Channel Diversions											
2.4.10	Flooding Protection Requirements											
2.4.11	Low Water Considerations	18	02.04.11-1	2008/7/18	Y	N	N	fin.	-	DCD_02.04.11-1	-	1

Chapter:2

Section		DCD RAI Response							Other Drivers	Change ID Number for DCD forthcoming Revision	DCD Tracking Report Revision	DCD Revision
No.	Title	RAI No.	Question No.	Response Date	Impact on DCD	Impact on COLA	Impact on PRA	Response Status				
2.4.12	Groundwater	19	02.04.12-1	2008/7/18	Y	N	N	fin.	-	DCD_02.04.12-1	0	2
2.4.13	Accidental Releases of Radioactive Liquid Effluents in Ground and Surface Waters	20	02.04.13-1	2008/7/18	Y	N	N	fin.	-	DCD_02.04.13-1	-	1
2.4.14	Technical Specifications and Emergency Operation Requirements	24	02.04.14-1	2008/7/18	Y	N	N	fin.	-	DCD_02.04.14-1	-	1
2.5.1	Technical Specifications and Emergency Operation Requirements											
2.5.2	Vibratory Ground Motion	96	02.05.02-01	2008/12/3	Y	N	N	fin.	-	DCD_02.05.02-1	0	2

Chapter:2

Section		DCD RAI Response							Other Drivers	Change ID Number for DCD forthcoming Revision	DCD Tracking Report Revision	DCD Revision
No.	Title	RAI No.	Question No.	Response Date	Impact on DCD	Impact on COLA	Impact on PRA	Response Status				
2.5.3	Surface Faulting											
2.5.4	Stability of Subsurface Materials	94	02.05.04-01	2008/12/3	Y	N	N	fin.	-	DCD-02.05.04-1	0	2
	and Foundations	94	02.05.04-02	2008/12/3	N	N	N	fin.	-	-	N/.A	N/A
2.5.5	Stability fo Slopes	95	02.05.05-01	2008/12/3	Y	N	N	fin.	-	DCD_02.05-1	0	2
		95	02.05.05-02	2008/12/3	N	N	N	fin.	-	-	N/.A	N/A

Chapter:3

Section		DCD RAI Response							Other Drivers	Change ID Number for DCD forthcoming Revision	DCD Tracking Report Revision	DCD Revision
No.	Title	RAI No.	Question No.	Response Date	Impact on DCD	Impact on COLA	Impact on PRA	Response Status				
3.2.1	Seismic Classification											
3.2.2	System Quality Group Classification											
3.3.1	Wind Loadings											
3.3.2	Tornado Loadings											
3.4.1	Internal Flood Protection for Onsite Equipment Failures											
3.4.2	Analysis Procedures											
3.5.1.1	Internally Generated Missiles											

Chapter:3

Section		DCD RAI Response							Other Drivers	Change ID Number for DCD forthcoming Revision	DCD Tracking Report Revision	DCD Revision
No.	Title	RAI No.	Question No.	Response Date	Impact on DCD	Impact on COLA	Impact on PRA	Response Status				
	(Outside Containment)											
3.5.1.2	Internally-Generated Missiles											
	(Inside Containment)											
3.5.1.3	Turbine Missiles											
3.5.1.4	Missiles Generated by											
	Tornadoes and Extreme Winds											
3.5.1.5	Site Proximity Missiles											
	(Except Aircraft)											
3.5.1.6	Aircraft Hazards											
3.5.2	Structures, Systems, and											
	Components to be Protected											

Chapter:3

Section		DCD RAI Response							Other Drivers	Change ID Number for DCD forthcoming Revision	DCD Tracking Report Revision	DCD Revision
No.	Title	RAI No.	Question No.	Response Date	Impact on DCD	Impact on COLA	Impact on PRA	Response Status				
	from Externally-Generated											
	Missiles											
3.5.3	Barrier Design Procedures											
3.6.1	Plant Design for Protection											
	Against Postulated Piping Failures											
	in Fluid Systems											
	Outside Containment											
3.6.2	Determination of Rupture Locations	71	03.06.02-1	2008/10/7	N	N	N	fin.	-	-	N/A	N/A
	and Dynamic Effects Associated	71	03.06.02-2	2008/10/7	Y	N	N	fin.	-	DCD_03.06.02-2	0	2
	with the Postulated Rupture	71	03.06.02-3	2008/10/7	Y	N	N	fin.	-	DCD_03.06.02-3	0	2
	of Piping	71	03.06.02-4	2008/10/7	N	N	N	fin.	-	-	N/A	N/A
		71	03.06.02-5	2008/10/7	Y	N	N	fin.	-	DCD_03.06.02-5	0	2
		71	03.06.02-6	2008/10/7	Y	N	N	fin.	-	DCD_03.06.02-6	0	2
		71	03.06.02-7	2008/10/7	Y	N	N	fin.	-	DCD_03.06.02-7	0	2
		71	03.06.02-8	2008/10/7	N	N	N	fin.	-	-	N/A	N/A
		71	03.06.02-9	2008/10/7	Y	N	N	fin.	-	DCD_03.06.02-9	0	2
		71	Intro for 03.06.02-10 thru 15	2008/11/7	N	N	N	fin.	-	-	N/A	N/A
		71	03.06.02-10	2008/11/7	N	N	N	fin.	-	-	N/A	N/A
		71	03.06.02-11	2008/11/7	Y	N	N	fin.	-	DCD_03.06.02-11	0	2
		71	03.06.02-12	2008/11/7	N	N	N	fin.	-	-	N/A	N/A
		71	03.06.02-13	2008/11/7	N	N	N	fin.	-	-	N/A	N/A
		71	03.06.02-14	2008/11/7	N	N	N	fin.	-	-	N/A	N/A
		71	03.06.02-15	2008/11/7	N	N	N	fin.	-	-	N/A	N/A

Chapter:3

Section		DCD RAI Response							Other Drivers	Change ID Number for DCD forthcoming Revision	DCD Tracking Report Revision	DCD Revision
No.	Title	RAI No.	Question No.	Response Date	Impact on DCD	Impact on COLA	Impact on PRA	Response Status				
		71	03.06.02-16	2008/10/7	Y	N	N	fin.	-	DCD_03.06.02-16	0	2
		71	03.06.02-17	2008/10/7	N	N	N	fin.	-	-	N/A	N/A
		71	03.06.02-18	2008/10/7	N	N	N	fin.	-	-	N/A	N/A
		71	03.06.02-19	2008/10/7	Y	N	N	fin.	-	-	-	1
3.6.3	Leak-Before-Break Evaluation Procedures											
3.7.1	Seismic Design Parameters											
3.7.2	Seismic System Analysis											
3.7.3	Seismic Subsystem Analysis											
3.7.4	Seismic Instrumentation	55	03.07.04-1	2008/9/1	Y	N	N	fin.	-	DCD_03.07.04-1	0	2
		55	03.07.04-2	2008/9/1	Y	N	N	fin.	-	DCD_03.07.04-2	0	2

Chapter:3

Section		DCD RAI Response							Other Drivers	Change ID Number for DCD forthcoming Revision	DCD Tracking Report Revision	DCD Revision
No.	Title	RAI No.	Question No.	Response Date	Impact on DCD	Impact on COLA	Impact on PRA	Response Status				
3.8.1	Concrete Containment											
3.8.3	Concrete and Steel Internal Structures of Steel or Concrete Containments											

Chapter:3

Section		DCD RAI Response							Other Drivers	Change ID Number for DCD forthcoming Revision	DCD Tracking Report Revision	DCD Revision
No.	Title	RAI No.	Question No.	Response Date	Impact on DCD	Impact on COLA	Impact on PRA	Response Status				
3.8.4	Other Seismic Category I Structures											
3.8.5	Foundations											
3.9.1	Special Topics for Mechanical Components											
3.9.2	Dynamic Testing and Analysis of Systems, Structures, and Components											
3.9.3	ASME Code Class 1, 2, and 3 Components, and Component Supports, and Core Support Structures											
3.9.4	Control Rod Drive Systems	107	1293-01	2008/12/19	Y	N	N	fin.	-	DCD_1293-01	0	2
		107	1293-02	2008/12/19	Y	N	N	fin.	-	DCD_1293-02	0	2
		107	1293-03	2008/12/19	Y	N	N	fin.	-	DCD_1293-03	0	2
		107	1293-04	2008/12/19	N	N	N	fin.	-	N/A	N/A	

Chapter:3

Section		DCD RAI Response							Other Drivers	Change ID Number for DCD forthcoming Revision	DCD Tracking Report Revision	DCD Revision
No.	Title	RAI No.	Question No.	Response Date	Impact on DCD	Impact on COLA	Impact on PRA	Response Status				
		107	1293-05	2008/12/19	N	N	N	fin.	-	N/A	N/A	
		107	1293-06	2008/12/19	N	N	N	fin.	-	N/A	N/A	
		107	1293-07	2008/12/19	N	N	N	fin.	-	N/A	N/A	
		107	1293-08	2008/12/19	Y	N	N	fin.	-	DCD_1293-08	0	2
		107	1293-09	2008/12/19	N	N	N	fin.	-	N/A	N/A	
		107	1293-10	2008/12/19	Y	N	N	fin.	-	DCD_1293-10	0	2
3.9.5	Reactor Pressure Vessel Internals											
3.9.6	Functional Design, Qualification, and Inservice Testing Programs for Pumps, Valves, and Dynamic Restraints											
3.10	Seismic/Dynamic Qual of Mech/Elec Eqmt											

Chapter:3

Section		DCD RAI Response							Other Drivers	Change ID Number for DCD forthcoming Revision	DCD Tracking Report Revision	DCD Revision
No.	Title	RAI No.	Question No.	Response Date	Impact on DCD	Impact on COLA	Impact on PRA	Response Status				
3.11	Environmental Qual of Mech/Elec Eqmt											
3.12	ASME Code Class 1, 2, and 3 Piping Systems, Piping Components and their Associated Supports											
3.13	Threaded Fasteners - ASME Code Class 1, 2, and 3											

Chapter:5

Section		DCD RAI Response							Other Drivers	Change ID Number for DCD forthcoming Revision	DCD Tracking Report Revision	DCD Revision
No.	Title	RAI No.	Question No.	Response Date	Impact on DCD	Impact on COLA	Impact on PRA	Response Status				
5.2.1.1	Compliance with the Codes and Standards Rule, 10 CFR 50.55a											
5.2.1.2	Applicable Code Cases											
5.2.2	Overpressure Protection	103	05.02.02-1	2008/12/25	N	N	N	fin.	-	-	N/A	N/A
		103	05.02.02-2	2008/12/25	N	N	N	fin.	-	-	N/A	N/A
		103	05.02.02-3	2008/12/25	N	N	N	fin.	-	-	N/A	N/A
		103	05.02.02-4	2008/12/25	N	N	N	fin.	-	-	N/A	N/A
		103	05.02.02-5	2008/12/25	N	N	N	fin.	-	-	N/A	N/A
		103	05.02.02-6	2008/12/25	N	N	N	fin.	-	-	N/A	N/A
		103	05.02.02-7	2008/12/25	Y	N	N	fin.	-	DCD_05.02.02-7	0	2
		103	05.02.02-8	2008/12/25	N	N	N	fin.	-	-	N/A	N/A
5.2.3	Reactor Coolant Pressure Boundary Materials											

Chapter:5

Section		DCD RAI Response							Other Drivers	Change ID Number for DCD forthcoming Revision	DCD Tracking Report Revision	DCD Revision
No.	Title	RAI No.	Question No.	Response Date	Impact on DCD	Impact on COLA	Impact on PRA	Response Status				
5.2.4	Reactor Coolant Pressure Boundary Inservice Inspection and Testing											
5.2.5	Reactor Coolant Pressure Boundary Leakage Detection											
5.3.1	Reactor Vessel Materials											
5.3.2	Pressure-Temperature Limits, Upper-Shelf Energy, and Pressurized Thermal Shock											
5.3.3	Reactor Vessel Integrity											
5.4	Reactor Coolant System Component and Subsystem Design	47	5.4.10-1	2008/9/22	N	N	N	fin.	-	-	N/A	N/A

Chapter:5

Section		DCD RAI Response							Other Drivers	Change ID Number for DCD forthcoming Revision	DCD Tracking Report Revision	DCD Revision
No.	Title	RAI No.	Question No.	Response Date	Impact on DCD	Impact on COLA	Impact on PRA	Response Status				
5.4.1.1	Pump Flywheel Integrity (PWR)											
5.4.2.1	Steam Generator Materials											
5.4.2.2	Steam Generator Program											
5.4.7	Residual Heat Removal (RHR) System											
5.4.11	Pressurizer Relief Tank											
5.4.12	Reactor Coolant System High Point Vents	48	5.4.12-1	2008/9/22	N	N	N	fin.	-	-	N/A	N/A
		48	5.4.12-2	2008/9/22	N	N	N	fin.	-	-	N/A	N/A
		48	5.4.12-3	2008/9/22	N	N	N	fin.	-	-	N/A	N/A
		48	5.4.12-4	2008/9/22	N	N	N	fin.	-	-	N/A	N/A

Chapter:5

Section		DCD RAI Response							Other Drivers	Change ID Number for DCD forthcoming Revision	DCD Tracking Report Revision	DCD Revision
No.	Title	RAI No.	Question No.	Response Date	Impact on DCD	Impact on COLA	Impact on PRA	Response Status				
		48	5.4.12-5	2008/9/22	N	N	N	fin.	-	-	N/A	N/A
		48	5.4.12-6	2008/9/22	N	N	N	fin.	-	-	N/A	N/A

Chapter:8

Section		DCD RAI Response							Other Drivers	Change ID Number for DCD forthcoming Revision	DCD Tracking Report Revision	DCD Revision
No.	Title	RAI No.	Question No.	Response Date	Impact on DCD	Impact on COLA	Impact on PRA	Response Status				
8.1	Electric Power - Introduction											
8.2	Offsite Power System	4	08.02-1	2008/5/30	Y	Y	N	fin.	-	DCD_08.02-1	-	1
		4	08.02-2	2008/5/30	N	Y	N	fin.	-	-	N/A	N/A
		4	08.02-3	2008/5/30	Y	Y	N	fin.	-	DCD_08.02-3	-	1
		4	08.02-4	2008/5/30	Y	N	N	fin.	-	DCD_08.02-4	-	1
		4	08.02-5	2008/5/30	N	N	N	fin.	-	-	N/A	N/A
		4	08.02-6	2008/5/30	Y	N	N	fin.	-	DCD_08.02-6	-	1
		4	08.02-7	2008/5/30	Y	Y	N	fin.	-	DCD_08.02-7	-	1
		4	08.02-8	2008/5/30	Y	N	N	fin.	-	DCD_08.02-8	-	1
		4	08.02-9	2008/5/30	N	N	N	fin.	-	-	N/A	N/A
8.3.1	A-C Power Systems (Onsite)	5	08.03.01-1	2008/6/6	N	N	N	fin.	-	-	N/A	N/A
		5	08.03.01-2	2008/6/6	N	N	N	fin.	-	-	N/A	N/A
		5	08.03.01-3	2008/6/6	N	N	N	fin.	-	-	N/A	N/A
		5	08.03.01-4	2008/6/6	N	N	N	fin.	-	-	N/A	N/A
		5	08.03.01-5	2008/6/6	N	N	N	fin.	-	-	N/A	N/A
		5	08.03.01-6	2008/6/6	N	N	N	fin.	-	-	N/A	N/A
		10	08.03.01-7	2008/7/18	Y	N	N	fin.	-	DCD_08.03.01-7	0	2
		10	08.03.01-8	2008/7/18	N	N	N	fin.	-	-	N/A	N/A
		10	08.03.01-9	2008/7/18	Y	N	N	fin.	-	DCD_08.03.01-9	0	2

Chapter:8

Section		DCD RAI Response							Other Drivers	Change ID Number for DCD forthcoming Revision	DCD Tracking Report Revision	DCD Revision
No.	Title	RAI No.	Question No.	Response Date	Impact on DCD	Impact on COLA	Impact on PRA	Response Status				
		10	08.03.01-10	2008/7/18	N	N	N	fin.	-	-	N/A	N/A
		10	08.03.01-11	2008/7/18	N	N	N	fin.	-	-	N/A	N/A
		10	08.03.01-12	2008/7/18	N	N	N	fin.	-	-	N/A	N/A
		10	08.03.01-13	2008/7/18	N	N	N	fin.	-	-	N/A	N/A
		10	08.03.01-14	2008/7/18	N	N	N	fin.	-	-	N/A	N/A
		10	08.03.01-15	2008/7/18	Y	N	N	fin.	-	DCD_08.03.01-15	0	2
		10	08.03.01-16	2008/7/18	N	N	N	fin.	-	-	N/A	N/A
		10	08.03.01-17	2008/7/18	Y	N	N	fin.	-	DCD_08.03.01-17	0	2
		10	08.03.01-18	2008/7/18	N	N	N	fin.	-	-	N/A	N/A
		10	08.03.01-19	2008/7/18	N	N	N	fin.	-	-	N/A	N/A
		10	08.03.01-20	2008/7/18	N	N	N	fin.	-	-	N/A	N/A
		10	08.03.01-21	2008/7/18	Y	N	N	fin.	-	DCD_08.03.01-21	0	2
		10	08.03.01-22	2008/7/18	N	N	N	fin.	-	-	N/A	N/A
8.3.2	D-C Power Systems (Onsite)	3	01-1	2008/5/30	N	N	N	fin.	-	-	N/A	N/A
		8	08.03.02-2	2008/7/10	N	N	N	fin.	-	-	N/A	N/A
		8	08.03.02-3	2008/7/10	Y	N	N	fin.	-	DCD_08.03.02-3	-	1
		8	08.03.02-4	2008/7/10	N	N	N	fin.	-	-	N/A	N/A
		8	08.03.02-5	2008/7/10	N	N	N	fin.	-	-	N/A	N/A
		8	08.03.02-6	2008/7/10	N	N	N	fin.	-	-	N/A	N/A
		8	08.03.02-7	2008/7/10	Y	N	N	fin.	-	DCD_08.03.02-7	-	1
		8	08.03.02-8	2008/7/10	N	N	N	fin.	-	-	N/A	N/A
		8	08.03.02-9	2008/7/10	Y	N	N	fin.	-	DCD_08.03.02-9	-	1
		8	08.03.02-10	2008/7/10	N	N	N	fin.	-	-	N/A	N/A
		8	08.03.02-11	2008/7/10	N	N	N	fin.	-	-	N/A	N/A
		8	08.03.02-12	2008/7/10	N	N	N	fin.	-	-	N/A	N/A
		8	08.03.02-13	2008/7/10	N	N	N	fin.	-	-	N/A	N/A

Chapter:8

Section		DCD RAI Response							Other Drivers	Change ID Number for DCD forthcoming Revision	DCD Tracking Report Revision	DCD Revision
No.	Title	RAI No.	Question No.	Response Date	Impact on DCD	Impact on COLA	Impact on PRA	Response Status				
		8	08.03.02-14	2008/7/10	N	N	N	fin.	-	-	N/A	N/A
8.4	Station Blackout	11	08.04-1	2008/7/18	N	N	N	fin.	-	-	N/A	N/A
		11	08.04-2	2008/7/18	N	N	N	fin.	-	-	N/A	N/A
		11	08.04-3	2008/7/18	N	N	N	fin.	-	-	N/A	N/A
		11	08.04-4	2008/7/18	N	N	N	fin.	-	-	N/A	N/A
		11	08.04-5	2008/7/18	N	N	N	fin.	-	-	N/A	N/A
		11	08.04-6	2008/7/18	N	N	N	fin.	-	-	N/A	N/A
		11	08.04-7	2008/7/18	N	N	N	fin.	-	-	N/A	N/A

Chapter:12

Section		DCD RAI Response							Other Drivers	Change ID Number for DCD forthcoming Revision	DCD Tracking Report Revision	DCD Revisio n
No.	Title	RAI No.	Question No.	Response Date	Impact on DCD	Impact on COLA	Impact on PRA	Respon se Status				
12.1	Assuring that	89	12.01-1	2008/11/26	Y	N	N	fin.	-	DCD_12.01-1	0	2
	Occupational Radiation Exposures	89	12.01-2	2008/11/26	Y	Y	N	fin.	-	DCD_12.01-2	0	2
	Are As Low As											
	Is Reasonably Achievable											
12.2	Radiation Sources											
12.3-	Radiation Protection	90	12.03-12.04-1	2008/11/26	Y	N	N	fin.	-	DCD_12.03-12.04-1	0	2
12.4	Design Features	91	12.03-12.04-2	2009/1/9	Y	Y	N	fin.	-	DCD_12.03-12.04-2	0	2
12.5	Operational Radiation											
	Protection Program											

Chapter:13

Section		DCD RAI Response							Other Drivers	Change ID Number for DCD forthcoming Revision	DCD Tracking Report Revision	DCD Revision
No.	Title	RAI No.	Question No.	Response Date	Impact on DCD	Impact on COLA	Impact on PRA	Response Status				
13.1.1	Management and Technical Support Organization											
13.1.2-13.1.3	Operating Organization											
13.2.1	Reactor Operator Requalification Program; Reactor Operator Training	60	13.02.01-1	2008/9/25	Y	Y	N	fin.	-	DCD_13.02.01-1	0	2
13.2.2	Non-Licensed Plant Staff Training											
13.3	Emergency Planning	46	13.03-1/13.3-1	2008/8/29	Y	N	N	fin.	-	DCD_13.03-1(1)	0	2
		46	13.03-1/13.3-2	2008/8/29	N	N	N	fin.	-	-	N/A	N/A
		46	13.03-1/13.3-3	2008/8/29	Y	N	N	fin.	-	DCD_13.03-1(3)	0	2
		108	13.03-2	2008/12/25	N	N	N	fin.	-	-	N/A	N/A
13.4	Operational Programs											

Chapter:13

Section		DCD RAI Response							Other Drivers	Change ID Number for DCD forthcoming Revision	DCD Tracking Report Revision	DCD Revision
No.	Title	RAI No.	Question No.	Response Date	Impact on DCD	Impact on COLA	Impact on PRA	Response Status				
13.5.1.1	Administrative Procedures - General											
13.5.1.2	Administrative Procedures - Initial Test Program											
13.5.2.1	Operating and Emergency Operating Procedures	61	13.05.02.01-1	2008/9/25	Y	Y	N	fin.	-	DCD_13.05.02-1	0	2
13.6	Physical Security											
13.7	Fitness for Duty											
App.13AA	Design, Construction and											

Chapter:13

Section		DCD RAI Response							Other Drivers	Change ID Number for DCD forthcoming Revision	DCD Tracking Report Revision	DCD Revision
No.	Title	RAI No.	Question No.	Response Date	Impact on DCD	Impact on COLA	Impact on PRA	Response Status				
	Pre-operational Activities											

Chapter:14

Section		DCD RAI Response							Other Drivers	Change ID Number for DCD forthcoming Revision	DCD Tracking Report Revision	DCD Revision
No.	Title	RAI No.	Question No.	Response Date	Impact on DCD	Impact on COLA	Impact on PRA	Response Status				
14.2	Initial Plant Test Program -	7	14.02-1	2008/6/27	Y	N	N	fin.	-	DCD_14.02-1	-	1
	Design Certification and	12	14.02-2	2008/7/18	Y	N	N	fin.	-	DCD_14.02-2	-	1
	New License Applicants	12	14.02-3	2008/7/18	Y	N	N	fin.	-	DCD_14.02-3	-	1
		12	14.02-4	2008/7/18	Y	N	N	fin.	-	DCD_14.02-4	-	1
		12	14.02-5	2008/7/18	Y	N	N	fin.	-	DCD_14.02-5	-	1
		12	14.02-6	2008/7/18	N	N	N	fin.	-	-	N/A	N/A
		12	14.02-7	2008/7/18	Y	N	N	fin.	-	DCD_14.02-7	-	1
		27	14.02-8	2008/7/31	Y	Y	N	fin.	-	DCD_14.02-8	0	2
		27	14.02-9	2008/7/31	N	N	N	fin.	-	-	N/A	N/A
		28	14.02-10	2008/7/31	Y	N	N	fin.	-	DCD_14.02-10	-	1
		28	14.02-11	2008/7/31	N	N	N	fin.	-	-	N/A	N/A
		28	14.02-12	2008/7/31	Y	N	N	fin.	-	DCD_14.02-12	-	1
		28	14.02-13	2008/7/31	Y	N	N	fin.	-	DCD_14.02-13	-	1
		28	14.02-14	2008/7/31	Y	N	N	fin.	-	DCD_14.02-14	-	1
		28	14.02-15	2008/7/31	Y	N	N	fin.	-	DCD_14.02-15	-	1
		28	14.02-16	2008/7/31	N	N	N	fin.	-	-	N/A	N/A
		28	14.02-17	2008/7/31	Y	N	N	fin.	-	DCD_14.02-17	-	1
		28	14.02-18	2008/7/31	Y	N	N	fin.	-	DCD_14.02-18	-	1
		28	14.02-19	2008/7/31	Y	N	N	fin.	-	DCD_14.02-19	0	2
		28	14.02-20	2008/7/31	Y	N	N	fin.	-	DCD_14.02-20	-	1
		28	14.02-21	2008/7/31	N	N	N	fin.	-	-	N/A	N/A
		28	14.02-22	2008/7/31	Y	N	N	fin.	-	DCD_14.02-22	-	1
		31	14.02-23	2008/8/29	Y	Y	N	fin.	-	DCD_14.02-23	0	2
		31	14.02-24	2008/8/29	Y	N	N	fin.	-	DCD_14.02-24	0	2
		33	14.02-25	2008/9/4	Y	N	N	fin.	-	DCD_14.02-25	0	2
		33	14.02-26	2008/9/4	Y	N	N	fin.	-	DCD_14.02-26	0	2
		33	14.02-27	2008/9/4	Y	N	N	fin.	-	DCD_14.02-27	0	2
		33	14.02-28	2008/9/4	N	N	N	fin.	-	-	N/A	N/A
		33	14.02-29	2008/9/4	Y	N	N	fin.	-	DCD_14.02-29	0	2
		33	14.02-30	2008/9/4	N	N	N	fin.	-	-	N/A	N/A
		33	14.02-31	2008/9/4	Y	N	N	fin.	-	DCD_14.02-31	0	2

Chapter:14

Section		DCD RAI Response							Other Drivers	Change ID Number for DCD forthcoming Revision	DCD Tracking Report Revision	DCD Revision
No.	Title	RAI No.	Question No.	Response Date	Impact on DCD	Impact on COLA	Impact on PRA	Response Status				
		33	14.02-32	2008/9/4	Y	N	N	fin.	-	DCD_14.02-32	0	2
		33	14.02-33	2008/9/4	Y	N	N	fin.	-	DCD_14.02-33	0	2
		33	14.02-34	2008/9/4	Y	N	N	fin.	-	DCD_14.02-34	0	2
		33	14.02-35	2008/9/4	Y	N	N	fin.	-	DCD_14.02-35	0	2
		33	14.02-36	2008/9/4	N	N	N	fin.	-	-	N/A	N/A
		33	14.02-37	2008/9/4	N	N	N	fin.	-	-	N/A	N/A
		33	14.02-38	2008/9/4	N	N	N	fin.	-	DCD_14.02-38	-	1
		33	14.02-39	2008/9/4	Y	N	N	fin.	-	DCD_14.02-39	0	2
		33	14.02-40	2008/9/4	Y	N	N	fin.	-	DCD_14.02-40	0	2
		33	14.02-41	2008/9/4	N	N	N	fin.	-	-	N/A	N/A
		33	14.02-42	2008/9/4	Y	N	N	fin.	-	DCD_14.02-42	0	2
		33	14.02-43	2008/9/4	Y	N	N	fin.	-	DCD_14.02-43	0	2
		33	14.02-44	2008/9/4	Y	N	N	fin.	-	DCD_14.02-44	0	2
		33	14.02-45	2008/9/4	Y	N	N	fin.	-	DCD_14.02-45	0	2
		33	14.02-46	2008/9/4	Y	N	N	fin.	-	DCD_14.02-46	0	2
		33	14.02-47	2008/9/4	Y	N	N	fin.	-	DCD_14.02-47	0	2
		33	14.02-48	2008/9/4	Y	N	N	fin.	-	DCD_14.02-48	0	2
		33	14.02-49	2008/9/4	N	N	N	fin.	-	-	N/A	N/A
		33	14.02-50	2008/9/4	Y	N	N	fin.	-	DCD_14.02-50	0	2
		33	14.02-51	2008/9/4	Y	N	N	fin.	-	DCD_14.02-51	0	2
		33	14.02-52	2008/9/4	N	N	N	fin.	-	DCD_14.02-52	N/A	N/A
		33	14.02-53	2008/9/4	Y	N	N	fin.	-	DCD_14.02-53	0	2
		33	14.02-54	2008/9/4	N	N	N	fin.	-	-	N/A	N/A
		33	14.02-55	2008/9/4	N	N	N	fin.	-	-	N/A	N/A
		33	14.02-56	2008/9/4	Y	N	N	fin.	-	DCD_14.02-56	0	2
		33	14.02-57	2008/9/4	Y	N	N	fin.	-	DCD_14.02-57	0	2
		33	14.02-58	2008/9/4	Y	N	N	fin.	-	DCD_14.02-58	0	2
		33	14.02-59	2008/9/4	Y	N	N	fin.	-	DCD_14.02-59	0	2
		33	14.02-60	2008/9/4	Y	N	N	fin.	-	DCD_14.02-60	0	2
		33	14.02-61	2008/9/4	Y	N	N	fin.	-	DCD_14.02-61	0	2
		33	14.02-62	2008/9/4	Y	N	N	fin.	-	DCD_14.02-62	0	2

Chapter:14

Section		DCD RAI Response							Other Drivers	Change ID Number for DCD forthcoming Revision	DCD Tracking Report Revision	DCD Revision
No.	Title	RAI No.	Question No.	Response Date	Impact on DCD	Impact on COLA	Impact on PRA	Response Status				
		33	14.02-63	2008/9/4	N	N	N	fin.	-	-	N/A	N/A
		33	14.02-64	2008/9/4	Y	N	N	fin.	-	DCD_14.02-64	0	2
		33	14.02-65	2008/9/4	Y	N	N	fin.	-	DCD_14.02-65	0	2
		33	14.02-66	2008/9/4	Y	N	N	fin.	-	DCD_14.02-66	0	2
		33	14.02-67	2008/9/4	Y	N	N	fin.	-	DCD_14.02-67	0	2
		33	14.02-68	2008/9/4	Y	N	N	fin.	-	DCD_14.02-68	0	2
		33	14.02-69	2008/9/4	Y	N	N	fin.	-	DCD_14.02-69	0	2
		33	14.02-70	2008/9/4	Y	N	N	fin.	-	DCD_14.02-70	0	2
		33	14.02-71	2008/9/4	Y	N	N	fin.	-	DCD_14.02-71	0	2
		33	14.02-72	2008/9/4	Y	N	N	fin.	-	DCD_14.02-72	0	2
		33	14.02-73	2008/9/4	N	N	N	fin.	-	-	N/A	N/A
		33	14.02-74	2008/9/4	Y	N	N	fin.	-	DCD_14.02-74	0	2
		33	14.02-75	2008/9/4	Y	N	N	fin.	-	DCD_14.02-75	0	2
		33	14.02-76	2008/9/4	Y	N	N	fin.	-	DCD_14.02-76	0	2
		33	14.02-77	2008/9/4	Y	N	N	fin.	-	DCD_14.02-77	0	2
		33	14.02-78	2008/9/4	N	N	N	fin.	-	-	N/A	N/A
		33	14.02-79	2008/9/4	N	N	N	fin.	-	-	N/A	N/A
		33	14.02-80	2008/9/4	Y	N	N	fin.	-	DCD_14.02-80	0	2
		33	14.02-81	2008/9/4	N	N	N	fin.	-	-	N/A	N/A
		33	14.02-82	2008/9/4	Y	N	N	fin.	-	DCD_14.02-82	0	2
		33	14.02-83	2008/9/4	Y	N	N	fin.	-	DCD_14.02-83	0	2
		33	14.02-84	2008/9/4	Y	N	N	fin.	-	DCD_14.02-84	0	2
		33	14.02-85	2008/9/4	Y	N	N	fin.	-	DCD_14.02-85	0	2
		58	14.02-86	2008/9/18	Y	N	N	fin.	-	DCD_14.02-86	0	2
		70	14.02-87	2008/9/25	Y	N	N	fin.	-	DCD_14.02-87	0	2
		78	14.02-88	2008/10/16	Y	N	N	fin.	-	DCD_14.02-88	0	2
		78	14.02-89	2008/10/16	Y	N	N	fin.	-	DCD_14.02-89	0	2
		93	14.02-90	2008/12/5	Y	Y	N	fin.	-	DCD_14.02-90	0	2
		102	14.02-91	2008/12/18	N	N	N	fin.	-	-	N/A	N/A
		102	14.02-92	2008/12/18	Y	N	N	fin.	-	DCD_14.02-92	0	2
		102	14.02-93	2008/12/18	Y	N	N	fin.	-	DCD_14.02-93	0	2

Chapter:14

Section		DCD RAI Response							Other Drivers	Change ID Number for DCD forthcoming Revision	DCD Tracking Report Revision	DCD Revision
No.	Title	RAI No.	Question No.	Response Date	Impact on DCD	Impact on COLA	Impact on PRA	Response Status				
		102	14.02-94	2008/12/18	Y	N	N	fin.	-	DCD_14.02-94	0	2
		102	14.02-95	2008/12/18	N	N	N	fin.	-	-	N/A	N/A
		102	14.02-96	2008/12/18	Y	N	N	fin.	-	DCD_14.02-96	0	2
		102	14.02-97	2008/12/18	Y	N	N	fin.	-	DCD_14.02-97	0	2
		102	14.02-98	2008/12/18	Y	N	N	fin.	-	DCD_14.02-98	0	2
		102	14.02-99	2008/12/18	Y	N	N	fin.	-	DCD_14.02-99	0	2
		102	14.02-100	2008/12/18	Y	N	N	fin.	-	DCD_14.02-100	0	2
		102	14.02-101	2008/12/18	Y	N	N	fin.	-	DCD_14.02-101	0	2
		102	14.02-102	2008/12/18	Y	N	N	fin.	-	DCD_14.02-102	0	2
		102	14.02-103	2008/12/18	Y	N	N	fin.	-	DCD_14.02-103	0	2
		102	14.02-104	2008/12/18	Y	N	N	fin.	-	DCD_14.02-104	0	2
		102	14.02-105	2008/12/18	N	N	N	fin.	-	-	N/A	N/A
		102	14.02-106	2008/12/18	Y	N	N	fin.	-	DCD_14.02-106	0	2
		123	14.02-107	2008/12/18	Y	N	N	fin.	-	DCD_14.02-107	0	2
14.3	Inspections, Tests, Analyses, and Acceptance Criteria	32	14.03-1	2008/8/29	Y	Y	N	fin.	-	DCD_14.03-1	0	2
		32	14.03-2	2008/8/29	N	N	N	fin.	-	-	N/A	N/A
		32	14.03-3	2008/8/29	N	N	N	fin.	-	-	N/A	N/A
		32	14.03-4	2008/8/29	Y	N	N	fin.	-	DCD_14.03-4	1	2
		32	14.03-5	2008/8/29	N	N	N	fin.	-	-	N/A	N/A

Chapter:14

Section		DCD RAI Response							Other Drivers	Change ID Number for DCD forthcoming Revision	DCD Tracking Report Revision	DCD Revision
No.	Title	RAI No.	Question No.	Response Date	Impact on DCD	Impact on COLA	Impact on PRA	Response Status				
14.3.2	Structural and Systems Engineering											
	Inspections, Tests, Analyses,											
	and Acceptance Criteria											
14.3.3	Piping Systems and Components											
	Inspections, Tests, Analyses,											
	and Acceptance Criteria											
14.3.4	Reactor Systems -											
14.3.5	Instrumentation and Controls -											
14.3.6	Electrical Systems -											
	Inspections, Tests, Analyses,											
	and Acceptance Criteria											
14.3.7	Plant Systems -	54	14.03.07-1/14.3.7.3.1-1	2008/9/19	N	N	N	fin.	-	-	N/A	N/A
	Inspections, Tests, Analyses,	54	14.03.07-1/14.3.7.3.1-2	2008/9/19	N	N	N	fin.	-	-	N/A	N/A

Chapter:14

Section		DCD RAI Response							Other Drivers	Change ID Number for DCD forthcoming Revision	DCD Tracking Report Revision	DCD Revision
No.	Title	RAI No.	Question No.	Response Date	Impact on DCD	Impact on COLA	Impact on PRA	Response Status				
	and Acceptance Criteria	54	14.03.07-1/14.3.7.3.1-3	2008/9/19	Y	N	N	fin.	-	DCD_14.03.07.03.01-3	1	2
		54	14.03.07-2/14.3.7.3.2-1	2008/9/19	N	N	N	fin.	-	-	N/A	N/A
		54	14.03.07-2/14.3.7.3.2-2	2008/9/19	N	N	N	fin.	-	-	N/A	N/A
		54	14.03.07-2/14.3.7.3.2-3	2008/9/19	N	N	N	fin.	-	-	N/A	N/A
		54	14.03.07-2/14.3.7.3.2-4	2008/9/19	N	N	N	fin.	-	-	N/A	N/A
		54	14.03.07-2/14.3.7.3.2-5	2008/9/19	Y	N	N	fin.	-	DCD_14.03.07.03.02-5	1	2
		54	14.03.07-2/14.3.7.3.2-6	2008/9/19	Y	N	N	fin.	-	DCD_14.03.07.03.02-6	1	2
		54	14.03.07-2/14.3.7.3.2-7	2008/9/19	N	N	N	fin.	-	-	N/A	N/A
		54	14.03.07-2/14.3.7.3.2-8	2008/9/19	Y	N	N	fin.	-	DCD_14.03.07.03.02-8	1	2
		54	14.03.07-2/14.3.7.3.2-9	2008/9/19	N	N	N	fin.	-	-	N/A	N/A
		54	14.03.07-2/14.3.7.3.2-10	2008/9/19	N	N	N	fin.	-	-	N/A	N/A
		54	14.03.07-2/14.3.7.3.2-11	2008/9/19	Y	N	N	fin.	-	DCD_14.03.07.03.02-1	1	2
		54	14.03.07-2/14.3.7.3.2-12	2008/9/19	N	N	N	fin.	-	-	N/A	N/A
		54	14.03.07-2/14.3.7.3.2-13	2008/9/19	N	N	N	fin.	-	-	N/A	N/A
		54	14.03.07-2/14.3.7.3.2-14	2008/9/19	Y	N	N	fin.	-	DCD_14.03.07.03.02-1	1	2
		54	14.03.07-2/14.3.7.3.2-15	2008/9/19	Y	N	N	fin.	-	DCD_14.03.07.03.02-1	1	2
		54	14.03.07-2/14.3.7.3.2-16	2008/9/19	Y	N	N	fin.	-	DCD_14.03.07.03.02-1	1	2
		54	14.03.07-2/14.3.7.3.2-17	2008/9/19	Y	N	N	fin.	-	DCD_14.03.07.03.02-1	1	2
		54	14.03.07-2/14.3.7.3.2-18	2008/9/19	Y	N	N	fin.	-	DCD_14.03.07.03.02-1	0	2
		54	14.03.07-2/14.3.7.3.2-19	2008/9/19	N	N	N	fin.	-	-	N/A	N/A
		54	14.03.07-2/14.3.7.3.2-20	2008/9/19	N	N	N	fin.	-	-	N/A	N/A
		54	14.03.07-2/14.3.7.3.2-21	2008/9/19	Y	N	N	fin.	-	DCD_14.03.07.03.02-2	0	2
		54	14.03.07-2/14.3.7.3.2-22	2008/9/19	N	N	N	fin.	-	-	N/A	N/A
		54	14.03.07-2/14.3.7.3.2-23	2008/9/19	N	N	N	fin.	-	-	N/A	N/A
		54	14.03.07-3/14.3.7.3.4-1	2008/9/19	N	N	N	fin.	-	-	N/A	N/A
		54	14.03.07-3/14.3.7.3.4-2	2008/9/19	N	N	N	fin.	-	-	N/A	N/A
		54	14.03.07-3/14.3.7.3.4-3	2008/9/19	N	N	N	fin.	-	-	N/A	N/A
		54	14.03.07-3/14.3.7.3.4-4	2008/9/19	N	N	N	fin.	-	-	N/A	N/A
		54	14.03.07-3/14.3.7.3.4-5	2008/9/19	N	N	N	fin.	-	-	N/A	N/A
		54	14.03.07-3/14.3.7.3.4-6	2008/9/19	Y	N	N	fin.	-	DCD_14.03.07.03.04-6	1	2
		54	14.03.07-3/14.3.7.3.4-7	2008/9/19	N	N	N	fin.	-	-	N/A	N/A

Chapter:14

Section		DCD RAI Response							Other Drivers	Change ID Number for DCD forthcoming Revision	DCD Tracking Report Revision	DCD Revision
No.	Title	RAI No.	Question No.	Response Date	Impact on DCD	Impact on COLA	Impact on PRA	Response Status				
		54	14.03.07-3/14.3.7.3.4-8	2008/9/19	N	N	N	fin.	-	-	N/A	N/A
		54	14.03.07-3/14.3.7.3.4-9	2008/9/19	Y	N	N	fin.	-	DCD_14.03.07.03.04-9	1	2
		54	14.03.07-3/14.3.7.3.4-10	2008/9/19	Y	N	N	fin.	-	DCD_14.03.07.03.04-10	0	2
		54	14.03.07-3/14.3.7.3.4-11	2008/9/19	Y	N	N	fin.	-	DCD_14.03.07.03.04-11	1	2
		54	14.03.07-3/14.3.7.3.4-12	2008/9/19	Y	N	N	fin.	-	DCD_14.03.07.03.04-12	0	2
		54	14.03.07-3/14.3.7.3.4-13	2008/9/19	N	N	N	fin.	-	-	N/A	N/A
		54	14.03.07-3/14.3.7.3.4-14	2008/9/19	N	N	N	fin.	-	-	N/A	N/A
		54	14.03.07-3/14.3.7.3.4-15	2008/9/19	N	N	N	fin.	-	-	N/A	N/A
		54	14.03.07-5/14.3.7.3.6-1	2008/9/19	N	N	N	fin.	-	-	N/A	N/A
		54	14.03.07-5/14.3.7.3.6-2	2008/9/19	N	N	N	fin.	-	-	N/A	N/A
		54	14.03.07-5/14.3.7.3.6-3	2008/9/19	N	N	N	fin.	-	-	N/A	N/A
		54	14.03.07-5/14.3.7.3.6-4	2008/9/19	Y	N	N	fin.	-	DCD_14.03.07.03.06-4	0	2
		54	14.03.07-5/14.3.7.3.6-5	2008/9/19	Y	N	N	fin.	-	DCD_14.03.07.03.06-5	1	2
		54	14.03.07-5/14.3.7.3.6-6	2008/9/19	Y	Y	N	fin.	-	DCD_14.03.07.03.06-6	1	2
		54	14.03.07-5/14.3.7.3.6-7	2008/9/19	Y	N	N	fin.	-	DCD_14.03.07.03.06-7	1	2
		54	14.03.07-5/14.3.7.3.6-8	2008/9/19	Y	N	N	fin.	-	DCD_14.03.07.03.06-8	1	2
		54	14.03.07-5/14.3.7.3.6-9	2008/9/19	Y	N	N	fin.	-	DCD_14.03.07.03.06-9	1	2
		54	14.03.07-5/14.3.7.3.6-10	2008/9/19	N	N	N	fin.	-			
				2009/1/9	Y	N	N	fin.	-	DCD_14.03.07.03.06-10	1	2
		54	14.03.07-5/14.3.7.3.6-11	2008/9/19	N	N	N	fin.	-	-	N/A	N/A
		54	14.03.07-5/14.3.7.3.6-12	2008/9/19	N	N	N	fin.	-	-	N/A	N/A
		54	14.03.07-5/14.3.7.3.6-13	2008/9/19	Y	N	N	fin.	-	DCD_14.03.07.03.06-13	1	2
		54	14.03.07-5/14.3.7.3.6-14	2008/9/19	Y	N	N	fin.	-	DCD_14.03.07.03.06-14	1	2
		54	14.03.07-5/14.3.7.3.6-15	2008/9/19	N	N	N	fin.	-	-	N/A	N/A
		54	14.03.07-5/14.3.7.3.6-16	2008/9/19	Y	N	N	fin.	-	DCD_14.03.07.03.06-16	1	2
		54	14.03.07-5/14.3.7.3.6-17	2008/9/19	Y	N	N	fin.	-	DCD_14.03.07.03.06-17	1	2
		54	14.03.07-5/14.3.7.3.6-18	2008/9/19	N	N	N	fin.	-	-	N/A	N/A
		54	14.03.07-5/14.3.7.3.6-19	2008/9/19	N	N	N	fin.	-	-	N/A	N/A
		54	14.03.07-5/14.3.7.3.6-20	2008/9/19	Y	N	N	fin.	-	DCD_14.03.07.03.06-20	1	2
		54	14.03.07-5/14.3.7.3.6-21	2008/9/19	N	N	N	fin.	-	-	N/A	N/A
		54	14.03.07-5/14.3.7.3.6-22	2008/9/19	Y	N	N	fin.	-	DCD_14.03.07.03.06-22	1	2

Chapter:14

Section		DCD RAI Response							Other Drivers	Change ID Number for DCD forthcoming Revision	DCD Tracking Report Revision	DCD Revision
No.	Title	RAI No.	Question No.	Response Date	Impact on DCD	Impact on COLA	Impact on PRA	Response Status				
		54	14.03.07-5/14.3.7.3.6-23	2008/9/19	Y	N	N	fin.	-	DCD_14.03.07.03.06-23	0	2
		54	14.03.07-6/14.3.7.3.7-1	2008/9/19	N	N	N	fin.	-	-	N/A	N/A
		54	14.03.07-6/14.3.7.3.7-2	2008/9/19	N	N	N	fin.	-	-	N/A	N/A
		54	14.03.07-6/14.3.7.3.7-3	2008/9/19	N	N	N	fin.	-	-	N/A	N/A
		54	14.03.07-6/14.3.7.3.7-4	2008/9/19	N	N	N	fin.	-	-	N/A	N/A
14.3.8	Radiation Protection - Inspections, Tests, Analyses, and Acceptance Criteria											
14.3.9	Human Factors Engineering - Inspections, Tests, Analyses, and Acceptance Criteria											
14.3.10	Emergency Planning - Inspections, Tests, Analyses, and Acceptance Criteria											
14.3.11	Containment Systems - Inspections, Tests, Analyses, and Acceptance Criteria	51	14.03.11-1	2008/9/18	Y	N	N	fin.	-	DCD_14.03.11-1	0	2
		51	14.03.11-2	2008/9/18	Y	N	N	fin.	-	DCD_14.03.11-2	2	2
		51	14.03.11-3	2008/9/18	Y	N	N	fin.	-	DCD_14.03.11-3	2	2
		51	14.03.11-4	2008/9/18	N	N	N	fin.	-	-	N/A	N/A
		51	14.03.11-5	2008/9/18	Y	N	N	fin.	-	DCD_14.03.11-5	0	2
		51	14.03.11-6	2008/9/18	Y	N	N	fin.	-	DCD_14.03.11-6	1	2

Chapter:14

Section		DCD RAI Response							Other Drivers	Change ID Number for DCD forthcoming Revision	DCD Tracking Report Revision	DCD Revision
No.	Title	RAI No.	Question No.	Response Date	Impact on DCD	Impact on COLA	Impact on PRA	Response Status				
		51	14.03.11-7	2008/9/18	N	N	N	fin.	-	-	N/A	N/A
		51	14.03.11-8	2008/9/18	Y	N	N	fin.	-	DCD_14.03.11-8	1	2
		51	14.03.11-9	2008/9/18	N	N	N	fin.	-	-	N/A	N/A
		51	14.03.11-10	2008/9/18	N	N	N	fin.	-	-	N/A	N/A
		51	14.03.11-11	2008/9/18	Y	N	N	fin.	-	DCD_14.03.11-11	0	2
		51	14.03.11-12	2008/9/18	Y	N	N	fin.	-	DCD_14.03.11-12	0	2
		51	14.03.11-13	2008/9/18	N	N	N	fin.	-	-	N/A	N/A
		51	14.03.11-14	2008/9/18	Y	N	N	fin.	-	DCD_14.03.11-14	0	2
		51	14.03.11-15	2008/9/18	N	N	N	fin.	-	-	N/A	N/A
		51	14.03.11-16	2008/9/18	Y	N	N	fin.	-	DCD_14.03.11-16	2	2
		51	14.03.11-17	2008/9/18	Y	N	N	fin.	-	DCD_14.03.11-17	0	2
14.3.12	Physical Security Hardware -	52	14.03.12-1	2008/9/18	N	N	N	fin.	-	-	N/A	N/A
	Inspections, Tests, Analyses,	52	14.03.12-2	2008/9/18	N	N	N	fin.	-	-	N/A	N/A
	and Acceptance Criteria	52	14.03.12-3	2008/9/18	N	N	N	fin.	-	-	N/A	N/A
		52	14.03.12-4	2008/9/18	N	N	N	fin.	-	-	N/A	N/A
		52	14.03.12-5	2008/9/18	N	N	N	fin.	-	-	N/A	N/A
		52	14.03.12-6	2008/9/18	N	N	N	fin.	-	-	N/A	N/A
		52	14.03.12-7	2008/9/18	Y	N	N	fin.	-	DCD_14.03.12-7	2	2
		52	14.03.12-8	2008/9/18	N	N	N	fin.	-	-	N/A	N/A
		52	14.03.12-9	2008/9/18	N	N	N	fin.	-	-	N/A	N/A
		52	14.03.12-10	2008/9/18	N	N	N	fin.	-	-	N/A	N/A
		52	14.03.12-11	2008/9/18	Y	N	N	fin.	-	DCD_14.03.12-11	1	2

Chapter:14

Section		DCD RAI Response							Other Drivers	Change ID Number for DCD forthcoming Revision	DCD Tracking Report Revision	DCD Revision
No.	Title	RAI No.	Question No.	Response Date	Impact on DCD	Impact on COLA	Impact on PRA	Response Status				

Chapter:15

Section		DCD RAI Response							Other Drivers	Change ID Number for DCD forthcoming Revision	DCD Tracking Report Revision	DCD Revision
No.	Title	RAI No.	Question No.	Response Date	Impact on DCD	Impact on COLA	Impact on PRA	Response Status				
15	Introduction -											
	Transient and Accident Analyses											
15.0.2	Review of											
	Transient and											
	Accident Analysis Method											
15.0.3	Design Basis Accident	38	15.00.03-1	2008/8/22	N	N	N	fin.	-	-	N/A	N/A
	Radiological Consequences	38	15.00.03-2	2008/8/22	N	N	N	fin.	-	-	N/A	N/A
	of Analyses for	38	15.00.03-3	2008/8/22	N	N	N	fin.	-	-	N/A	N/A
	Advanced Light Water Reactors	38	15.00.03-4	2008/8/22	N	N	N	fin.	-	-	N/A	N/A
		38	15.00.03-5	2008/8/22	N	N	N	fin.	-	-	N/A	N/A
		38	15.00.03-6	2008/8/22	N	N	N	fin.	-	-	N/A	N/A
		38	15.00.03-7	2008/8/22	N	N	N	fin.	-	-	N/A	N/A
		38	15.00.03-8	2008/8/22	N	N	N	fin.	-	-	N/A	N/A
		38	15.00.03-9	2008/8/22	Y	N	N	fin.	-	DCD_15.00.03-9	0	2
		38	15.00.03-10	2008/8/22	N	N	N	fin.	-	-	N/A	N/A
		38	15.00.03-11	2008/8/22	Y	N	N	fin.	-	DCD_15.00.03-11	0	2
		38	15.00.03-12	2008/8/22	N	N	N	fin.	-	-	N/A	N/A
		38	15.00.03-13	2008/8/22	Y	N	N	fin.	-	DCD_15.00.03-13	0	2
		38	15.00.03-14	2008/8/22	Y	N	N	fin.	-	DCD_15.00.03-14	-	1
		38	15.00.03-15	2008/8/22	N	N	N	fin.	-	-	N/A	N/A
		38	15.00.03-16	2008/8/22	Y	N	N	fin.	-	DCD_15.00.03-16	0	2
		38	15.00.03-17	2008/8/22	N	N	N	fin.	-	-	N/A	N/A
		38	15.00.03-18	2008/8/22	N	N	N	fin.	-	-	N/A	N/A
		38	15.00.03-19	2008/8/22	N	N	N	fin.	-	-	N/A	N/A
		38	15.00.03-20	2008/10/20	N	N	N	fin.	-	-	N/A	N/A
		38	15.00.03-21	2008/10/20	N	N	N	fin.	-	-	N/A	N/A
		38	15.00.03-22	2008/8/22	Y	N	N	fin.	-	DCD_15.00.03-22	0	2

Chapter:15

Section		DCD RAI Response							Other Drivers	Change ID Number for DCD forthcoming Revision	DCD Tracking Report Revision	DCD Revision
No.	Title	RAI No.	Question No.	Response Date	Impact on DCD	Impact on COLA	Impact on PRA	Response Status				
		38	15.00.03-23	2008/8/22	N	N	N	fin.	-	-	N/A	N/A
		105	15.00.03-24	2009/1/6	N	N	N	fin.	-	-	N/A	N/A
		105	15.00.03-25	2009/1/6	Y	Y	N	fin.	-	DCD_15.00.03-25	0	2
		106	15.00.03-26	2009/1/6	Y	Y	N	fin.	-	DCD_15.00.03-26	0	2
15.1.1-	Decrease in Feedwater Temperature,											
15.1.4	Increase in Feedwater Flow,											
	Increase in Steam Flow,											
	and Inadvertent Opening of a											
	Steam Generator Relief or Safety Valve											
15.1.5	Steam System Piping Failures											
	Inside and Outside of Containment											
	(PWR)											
15.2.1-	Loss of External Load;											
15.2.5	Turbine Trip;											
	Loss of Condenser Vacuum;											
	Closure of Main Steam											
	Isolation Valve (BWR);											
	and Steam Pressure											
	Regulator Failure (Closed)											
15.2.6	Loss of Nonemergency AC Power											
	to the Station Auxiliaries											

Chapter:15

Section		DCD RAI Response							Other Drivers	Change ID Number for DCD forthcoming Revision	DCD Tracking Report Revision	DCD Revision
No.	Title	RAI No.	Question No.	Response Date	Impact on DCD	Impact on COLA	Impact on PRA	Response Status				
15.2.7	Loss of Normal Feedwater Flow											
15.2.8	Feedwater System Pipe Breaks Inside and Outside Containment (PWR)											
15.3.1-15.3.2	Loss of Forced Reactor Coolant Flow Including Trip of Pump Motor and Flow Controller Malfunctions											
15.3.3-15.3.4	Reactor Coolant Pump Rotor Seizure and Reactor Coolant Pump Shaft Break											
15.4.1	Uncontrolled Control Rod Assembly Withdrawal from a Subcritical or Low Power Startup Condition											
15.4.2	Uncontrolled Control Rod Assembly Withdrawal at Power											
15.4.3	Control Rod Misoperation											

Chapter:15

Section		DCD RAI Response							Other Drivers	Change ID Number for DCD forthcoming Revision	DCD Tracking Report Revision	DCD Revision
No.	Title	RAI No.	Question No.	Response Date	Impact on DCD	Impact on COLA	Impact on PRA	Response Status				
	(System Malfunction or											
	Operator Error)											
15.4.4-	Startup of an Inactive Loop or											
15.4.5	Recirculation Loop at an											
	Incorrect Temperature,											
	and Flow Controller Malfunction											
	Causing an Increase											
	in BWR Core Flow Rate											
15.4.6	Inadvertent Decrease in											
	Boron Concentration in the											
	Reactor Coolant System (PWR)											
15.4.7	Inadvertent Loading											
	and Operation of a Fuel Assembly											
	in an Improper Position											
15.4.8	Spectrum of											
	Rod Ejection Accidents (PWR)											
15.5.1-	Inadvertent Operation of											
15.5.2	ECCS and Chemical											
	and Volume Control											
	System Malfunction that											
	Increases Reactor Coolant Inventory											
15.5.7	Radioactive Releases											

Chapter:15

Section		DCD RAI Response							Other Drivers	Change ID Number for DCD forthcoming Revision	DCD Tracking Report Revision	DCD Revision
No.	Title	RAI No.	Question No.	Response Date	Impact on DCD	Impact on COLA	Impact on PRA	Response Status				
	from a Subsystem or Component											
15.6.1	Inadvertent Opening of a PWR Pressurizer Pressure Relief Valve or a BWR Pressure Relief Valve											
15.6.3	Radiological Consequences of Steam Generator Tube Failure											
15.6.5	Loss-of-Coolant Accidents Resulting From Spectrum of Postulated Piping Breaks Within the Reactor Coolant Pressure Boundary											
15.8	Anticipated Transients Without Scram											

Chapter 16

Section		DCD RAI Response							Other Drivers	Change ID Number for DCD forthcoming Revision	DCD Tracking Report Revision	DCD Revision
No.	Title	cc	Question No.	Response Date	Impact on DCD	Impact on COLA	Impact on PRA	Response Status				
16.1	General, Plant Sys,											
	Refueling, & Adm Ctrls:											
	Technical Specifications											
16.2	SLs, Reactivity,											
	Core Op Limits, & Special Ops:											
	Technical Specifications											
16.3	Instrumentation:	36	01-1	2008/8/22	Y	N	N	fin.	-	DCD_16.3_01-1	-	1
	Technical Specifications	72	16-1	2008/10/8	N	N	N	fin.	-	-	N/A	N/A
		72	16-2	2008/10/8	N	N	N	fin.	-	-	N/A	N/A
		72	16-3	2008/10/8	N	N	N	fin.	-	-	N/A	N/A
		72	16-4	2008/10/8	N	N	N	fin.	-	-	N/A	N/A
		72	16-5	2008/10/8	N	N	N	fin.	-	-	N/A	N/A
		72	16-6	2008/10/8	N	N	N	fin.	-	-	N/A	N/A
		72	16-7	2008/10/8	N	N	N	fin.	-	-	N/A	N/A
		72	16-8	2008/10/8	N	N	N	fin.	-	-	N/A	N/A
		72	16-9	2008/10/8	Y	Y	N	fin.	-	DCD_16-10	0	2
		72	16-10	2008/10/8	N	N	N	fin.	-	-	N/A	N/A
		72	16-11	2008/10/8	N	N	N	fin.	-	-	N/A	N/A

Chapter 16

Section		DCD RAI Response							Other Drivers	Change ID Number for DCD forthcoming Revision	DCD Tracking Report Revision	DCD Revision
No.	Title	cc	Question No.	Response Date	Impact on DCD	Impact on COLA	Impact on PRA	Response Status				
16.4	CS & ECCS: Technical Specifications											
16.5	Containment Systems:											
	Technical Specifications											
16.6	Electrical Power Sys:											
	Technical Specifications											

Chapter 1

Table 1.8-2 Compilation of All Combined License Applicant Items for Chapters 1-19 (sheet 33 of 44)

COL ITEM NO.	COL ITEM
COL 11.5(2)	*The COL applicant is to prepare an offsite dose calculation manual to provide specific administrative controls and liquid and gaseous effluent source terms to limit the releases to site-specific requirements containing a description of the methods and parameters that drive to arrive radiation instrumentation alarm setpoint. The COL applicant is to commit to follow the NEI generic template 07-09 (Ref. 11.5-30) as an alternative to providing the offsite dose calculation manual at the time of application.*
COL 11.5(3)	*The COL applicant is to develop a radiological and environmental monitoring program taking into consideration local land use and census data in identifying all potential radiation exposure pathways. The program shall take into account associated radioactive materials present in liquid and gaseous effluents and direct external radiation from SSCs. The COL applicant is to follow the guidance outlined in NUREG-1301(Ref. 11.5-21), and NUREG-0133 (Ref. 11.5-18) when developing the radiological effluent monitoring program. The COL applicant is to commit to follow the NEI generic template 07-09 (Ref. 11.5-30) as an alternative to providing the radiological effluent monitoring program at the time of application.*
COL 11.5(4)	*The COL applicant is to develop procedures which are of inspection, decontamination, and replacement related to radiation monitoring instruments.*
COL 11.5(5)	*The COL applicant is to provide analytical procedures and sensitivity for selected radioanalytical methods and type of sampling media for site-specific matter.*
COL 11.5(6)	*The COL applicant is to perform a site-specific cost benefit analysis to demonstrate compliance with the regulatory requirements.*
COL 12.1(1)	*The COL Applicant is to demonstrate that the policy considerations regarding plant operations are compliance with RG 1.8, 8.8 and 8.10 (Subsection 12.1.1.3).*
COL 12.1(2)	*Deleted*
COL 12.1(3)	*The COL Applicant is to describe how the plant follows the guidance of RG 8.2, 8.4, 8.6, 8.7, 8.9, 8.13, 8.15, ~~8.20,~~ 8.25, ~~8.26,~~ 8.27, 8.28, 8.29, ~~8.32,~~ 8.34, 8.35, 8.36 and 8.38.*

Table 1.8-2 Compilation of All Combined License Applicant Items for Chapters 1-19 (sheet 34 of 44)

COL ITEM NO.	COL ITEM
COL 12.1(4)	*Deleted*
COL 12.1(5)	*The COL Applicant is to provide the operational radiation protection program for ensuring that occupational radiation exposures are ALARA.*
COL 12.1(6)	*The COL applicant is to perform periodic review of operational practices to ensure configuration management, personnel training and qualification update, and procedure adherence.*
COL 12.1(7)	*The COL applicant is to track implementation of requirements for record retention according to 10CFR50.75(g) and 10CFR70.25(g) as applicable.*
COL 12.2(1)	*The COL Applicant is responsible for the use of any additional contained radiation sources that are not identified in subsection 12.2.1, including radiation sources used for instrument calibration or radiography.*
COL 12.2(2)	*The COL Applicant is to provide the detailed design of additional storage space for radwaste and/or additional radwaste facilities for dry active waste.*
COL 12.3(1)	*The COL Applicant is responsible for the use of portable instruments, and the associated training and procedures, to accurately determine the airborne iodine concentration in areas within the facility where plant personnel may be present during an accident, in accordance with the requirements of 10 CFR 50.34(f)(2)(xxvii) and the criteria in Item III.D.3.3 of NUREG-0737.*
COL 12.3(2)	*Deleted*
COL 12.3(3)	*Deleted*
COL 12.3(4)	*The COL Applicant is to provide the site radiation zones that is shown on the site-specific plant arrangement plan.*
COL 12.3(5)	*The COL Applicant is to discuss the administrative control of the fuel transfer tube inspection and the access control of the area near the seismic gap below the fuel transfer tube.*

Table 1.8-2 Compilation of All Combined License Applicant Items for Chapters 1-19 (sheet 40 of 44)

COL ITEM NO.	COL ITEM
COL 15.0(1)	*In the COLA, if the site-specific χ/Q values exceed DCD χ/Q values, then the COL Applicant is to demonstrate how the dose reference values in 10 CFR 50.34 and 10 CFR 52.79and the control room dose limits in 10 CFR 50, Appendix A, General Design Criterion~~a~~ 19 are met for affected events using site-specific χ/Q values. Additionally, the Technical Support Center (TSC) dose should be evaluated against the habitability requirements in Paragraph IV.E.8 to 10 CFR Part 50, Appendix E, and 10 CFR 50.47(b)(8) and (b)(11).*
COL 16.1(1)	*Adoption of RMTS is to be confirmed and the relevant descriptions are to be fixed.*
COL 16.1(2)	*Adoption of SFCP is to be confirmed and the relevant descriptions are to be fixed.*
COL 16.1_3.3.1(1)	*The trip setpoints and allowable values in Table 3.3.1-1 are to be confirmed after completion of a plant specific setpoint study following selection of the plant specific instrumentation.*
COL 16.1_3.3.2(1)	*The trip setpoints, allowable values and time delay value in Table 3.3.2-1 are to be confirmed after completion of a plant specific setpoint study following selection of the plant specific instrumentation.*
COL 16.1_3.3.5(1)	*The trip setpoints and time delay values in SR 3.3.5.3 are to be confirmed after completion of a plant specific setpoint study following selection of the plant specific instrumentation.*
COL 16.1_3.3.6(1)	*The trip setpoints and allowable values in Table 3.3.6-1 are to be confirmed after completion of a plant specific setpoint study following selection of the plant specific instrumentation.*
COL 16.1_3.4.17(1)	*The site specific information for tube repair is to be provided.*
COL 16.1_3.7.9(1)	*LCO 3.7.9 and associated Bases for the Ultimate Heat Sink based on plant specific design are to be developed.*
COL 16.1_3.7.10(1)	*LCO 3.7.10 and associated Bases for hazardous chemical are to be confirmed by the evaluation with site-specific condition.*

Table 1.9.1-1 US-APWR Conformance with Division 1 Regulatory Guides (sheet 3 of 15)

Reg Guide Number	Title	Status	Corresponding Chapter/Section /Subsection
1.29	Seismic Design Classification (Rev. 4, March 2007)	Conformance with no exceptions identified.	3.2.1, 5.2.5, 5.2.2.1, 5.4.11.1, 7.1.3.7, 8.1.5.3, 9.1.1, 9.1.2, 9.3.1
1.30	Quality Assurance Requirements for the Installation, Inspection, and Testing of Instrumentation and Electric Equipment (Rev. 0, August 1972)	Conformance with exceptions. Installation is not included in Design Certification phase.	14.2.7, 17.5
1.31	Control of Ferrite Content in Stainless Steel Weld Metal (Rev. 3, April 1978)	Conformance with no exceptions identified.	4.5.2, 5.2.3.4.4, 5.3.1.4
1.32	Criteria for Power Systems for Nuclear Power Plants (Rev. 3, March 2004)	Conformance with no exceptions identified.	8.1.5.3, 16.3
1.33	Quality Assurance Program Requirements (Operation) (Rev. 2, February 1978)	Conformance with exceptions. Implementation of RG applies to a site-specific operational program for which COL Applicant will be responsible.	12.1.3, 13.5
1.34	Control of Electroslag Weld Properties (Rev. 0, December 1972)	Not applicable. Electroslag welding is not employed in structural welds of low alloy steel. Electroslag welding is only applied for cladding.	5.2.3.3.2, 5.2.3.4.4, 5.3.1.4
1.35	In-Service Inspection (ISI) of Ungrouted Tendons in Prestressed Concrete Containments (Rev. 3, July 1990)	Conformance with no exceptions identified. Note: limited to design considerations; implementation of ISI physical inspection will be by COL Applicant.	3.8.1.2
1.35.1	Determining Prestressing Forces for Inspection of Prestressed Concrete Containments (Rev. 0, July 1990)	Conformance with no exceptions identified.	3.8.1.2
1.36	Nonmetallic Thermal Insulation for Austenitic Stainless Steel (Rev. 0, February 1973)	Conformance with no exceptions identified.	5.2.3.2, 6.1.1.2
1.37	Quality Assurance Requirements for Cleaning of Fluid Systems and Associated Components of Water-Cooled Nuclear Power Plants (Rev. 1, March 2007)	Conformance with exception. Programmatic/operational aspect is not applicable to US-APWR design certification.	3.13.1, 4.5.1, 5.2.3, 5.3.1, 6.1.1, 14.2.7
1.38	Quality Assurance Requirements for Packaging, Shipping, Receiving, Storage, and Handling of Items for Water-Cooled Nuclear Power Plants (Rev. 2, May 1977)	Not applicable. RG applies to a site-specific operational program.	N/A
1.39	Housekeeping Requirements for Water-Cooled Nuclear Power Plants (Rev. 2, September 1977)	Not applicable. RG applies to a site-specific operational program.	N/A

Table 1.9.1-4 US-APWR Conformance with Division 8 Regulatory Guides (sheet 2 of 4)

Reg Guide Number	Title	Status	Corresponding Chapter/Section/ Subsection
8.13	Instruction Concerning Prenatal Radiation Exposure (Rev. 3, June 1999)	Not applicable. RG refers to site-specific procedures and/or equipment that are outside the reference US-APWR design.	N/A ~~(RG is mentioned, however, in 12.1.4)~~
8.15	Acceptable Programs for Respiratory Protection (Rev. 1, October 1999)	Not applicable. RG refers to site-specific procedures and/or equipment that are outside the reference US-APWR design.	N/A ~~(RG is mentioned, however, in 12.1.4)~~
8.18	Information Relevant to Ensuring that Occupational Radiation Exposures at Medical Institutions Will Be as Low as Reasonably Achievable (Rev. 1, October 1982)	Not applicable. RG applies to medical institutions.	N/A
8.19	Occupational Radiation Dose Assessment in Light-Water Reactor Power Plants -- Design Stage Man-Rem Estimates (Rev. 1, June 1979)	Conformance with no exceptions identified	12.4
8.20	Applications of Bioassay for I-125 and I-131 (Rev. 1, September 1979)	Not applicable. ~~RG refers to site-specific procedures and/or equipment that are outside the reference US-APWR design.~~This RG is outdated according to NUREG-1736	N/A ~~(RG is mentioned, however, in 12.1.4)~~
8.21	Health Physics Surveys for Byproduct Material at NRC-Licensed Processing and Manufacturing Plants (Rev. 1, October 1979)	Not applicable. RG applies to processing and manufacturing plants.	N/A
8.22	Bioassay at Uranium Mills (Revision 1, August 1988)	Not applicable. RG applies to uranium mills.	N/A
8.23	Radiation Safety Surveys at Medical Institutions (Rev. 1, January 1981)	Not applicable. RG applies to medical institutions.	N/A
8.24	Health Physics Surveys During Enriched Uranium-235 Processing and Fuel Fabrication (Rev. 1, October 1979)	Not applicable. RG applies to uranium processing and fuel fabrication.	N/A
8.25	Air Sampling in the Workplace (Rev. 1, June 1992)	Not applicable. RG refers to site-specific procedures and/or equipment that are outside the reference US-APWR design.	N/A ~~(RG is mentioned, however, in 12.1.4)~~
8.26	Applications of Bioassay for Fission and Activation Products (Rev. 0, September 1980)	Not applicable. This RG is outdated according to NUREG-1736~~RG refers to site-specific procedures and/or equipment that are outside the~~	N/A ~~(RG is mentioned, however, in 12.1.4)~~

DCD_12.01-2

~~reference US APWR design.~~

Table 1.9.1-4 US-APWR Conformance with Division 8 Regulatory Guides (sheet 3 of 4)

Reg Guide Number	Title	Status	Corresponding Chapter/Section/ Subsection
8.27	Radiation Protection Training for Personnel at Light-Water-Cooled Nuclear Power Plants (Rev. 0, March 1981)	Not applicable. RG applies to training about radiation protection.	N/A
8.28	Audible-Alarm Dosimeters (Rev. 0, August 1981)	Not applicable. RG refers to site-specific procedures and/or equipment that are outside the reference US-APWR design.	N/A ~~(RG is mentioned, however, in 12.1.4)~~
8.29	Instruction Concerning Risks from Occupational Radiation Exposure (Rev. 1, February 1996)	Not applicable. RG refers to site-specific procedures and/or equipment that are outside the reference US-APWR design.	N/A ~~(RG is mentioned, however, in 12.1.4)~~
8.30	Health Physics Surveys in Uranium Recovery Facilities (Rev. 1, May 2002)	Not applicable. RG applies to uranium recovery facilities.	N/A
8.31	Information Relevant to Ensuring that Occupational Radiation Exposures at Uranium Recovery Facilities Will Be as Low as Is Reasonably Achievable (Rev. 1, May 2002)	Not applicable. RG applies to uranium recovery facilities.	N/A
8.32	Criteria for Establishing a Tritium Bioassay Program (Rev. 0, July 1988)	Not applicable. This RG is outdated according to NUREG-1736~~RG refers to site-specific procedures and/or equipment that are outside the reference US-APWR design.~~	N/A ~~(RG is mentioned, however, in 12.1.4)~~
8.33	Quality Management Program (Rev. 0, October 1991)	Not applicable. RG applies to medical use of by-product material.	N/A
8.34	Monitoring Criteria and Methods To Calculate Occupational Radiation Doses (Rev. 0, July 1992)	Not applicable. RG refers to site-specific procedures and/or equipment that are outside the reference US-APWR design.	N/A ~~(RG is mentioned, however, in 12.1.4)~~
8.35	Planned Special Exposures (Rev. 0, June 1992)	Not applicable. RG refers to site-specific procedures and/or equipment that are outside the reference US-APWR design.	N/~~A (RG is mentioned, however, in 12.1.4)~~
8.36	Radiation Dose to the Embryo/Fetus (Rev. 0, July 1992)	Not applicable. RG refers to site-specific procedures and/or equipment that are outside the reference US-APWR design.	N/A ~~(RG is mentioned, however, in 12.1.4)~~

Chapter 2

Table 2.0-1 Key Site Parameters
(Sheet 1 of ~~5~~8)

Meteorology	
Parameter Description	**Parameter Value**
Normal winter precipitation roof load(11)	50 lb/ft^2
~~Roof Snow Load (100-year snowpack maximum snow weight including contributing portion of 48-hour probable maximum winter precipitation [PMWP])~~ Extreme winter precipitation roof load(12) (100-year snowpack maximum snow weight including contributing portion of either extreme frozen winter precipitation event or extreme liquid winter precipitation event)	75 lb/ft^2
~~Weight of~~ 48-hr probable maximum winter precipitation(13) (PMWP)	~~50 lb/ft^2~~ 36 in.
Tornado maximum wind speed	230 mph
Tornado maximum pressure drop	1.2 psi
Tornado-generated missile spectrum and associated velocities	15 ft long schedule 40 steel pipe moving horizontally at 135 ft/s(1)
	4,000 lb automobile moving horizontally at 135 ft/s(1)
	1 in diameter steel sphere moving horizontally at 26 ft/s(1)
Extreme wind speed (other than in tornado)	155 mph for 3-second gusts at 33 ft above ground level based on 100-year return period, with importance factor of 1.15 for seismic category I/II structures
Ambient design air temperature (1% annual exceedance maximum)	100°F dry bulb, 77°F coincident wet bulb, 81°F non-coincident wet bulb
Ambient design air temperature (0% annual exceedance maximum)	115°F dry bulb, 80°F coincident wet bulb, 86°F non-coincident wet bulb, historical limit excluding peaks <2 hr
Ambient design air temperature (1% annual exceedance minimum)	-10°F dry bulb
Ambient design air temperature (0% annual exceedance minimum)	-40°F dry bulb, historical limit excluding peaks <2 hr
Atmospheric dispersion factors (χ/Q values) for onsite locations:	
Exclusion area boundary (EAB) 0-2 hrs	5.0×10^{-4} s/m^3
EAB annual average	1.6×10^{-5} s/m^3

Table 2.0-1 Key Site Parameters
(Sheet 1 of ~~5~~ 8)

Meteorology	
Parameter Description	**Parameter Value**
Roof Snow Load (100-year snowpack maximum snow weight including contributing portion of 48-hour probable maximum winter precipitation [PMWP])	75 lb/ft^2
Weight of 48-hr PMWP	50 lb/ft^2
Tornado maximum wind speed	230 mph
Tornado maximum pressure drop	1.2 psi
Tornado-generated missile spectrum and associated velocities	15 ft long schedule 40 steel pipe moving horizontally at 135 ft/s(1)
	4,000 lb automobile moving horizontally at 135 ft/s(1)
	1 in diameter steel sphere moving horizontally at 26 ft/s(1)
Extreme wind speed (other than in tornado)	155 mph for 3-second gusts at 33 ft above ground level based on 100-year return period, with importance factor of 1.15 for seismic category I/II structures
Ambient design air temperature (1% annual exceedance maximum)	100°F dry bulb, 77°F coincident wet bulb, 81°F non-coincident wet bulb
Ambient design air temperature (0% annual exceedance maximum)	115°F dry bulb, 80°F coincident wet bulb, 86°F non-coincident wet bulb, historical limit excluding peaks <2 hr
Ambient design air temperature (1% annual exceedance minimum)	-10°F dry bulb
Ambient design air temperature (0% annual exceedance minimum)	-40°F dry bulb, historical limit excluding peaks <2 hr
Atmospheric dispersion factors (χ/Q values) for onsite locations:	
Exclusion area boundary (EAB) 0-2 hrs	5.0×10^{-4} s/m^3
EAB annual average	1.6×10^{-5} s/m^3

Table 2.0-1 Key Site Parameters
(Sheet 2 of ~~5~~ 8)

Atmospheric dispersion factors (χ/Q values) for offsite locations:	
Low-population zone (LPZ) boundary	
0-8 hrs	2.1×10^{-4} s/m^3
8-24 hrs	1.3×10^{-4} s/m^3
1-4 days	6.9×10^{-5} s/m^3
4-30 days	2.8×10^{-5} s/m^3
Food production area	
annual average	5.0×10^{-6} s/m^3
Deposition factor (D/Q value) for onsite and offsite locations:	
EAB	
annual average	4.0×10^{-8} 1/m^2
Atmospheric dispersion factors (χ/Q values) for main control room (MCR) heating, ventilation, and air conditioning (HVAC) intake for specified release points(2):	
Plant vent (4)	
0-8 hrs	1.1×10^{-3} s/m^3
8-24 hrs	6.6×10^{-4} s/m^3
1-4 days	4.2×10^{-4} s/m^3
4-30 days	1.9×10^{-4} s/m^3
Ground-level containment releases(4)	
0-8 hrs	2.2×10^{-3} s/m^3
8-24 hrs	1.3×10^{-3} s/m^3
1-4 days	8.3×10^{-4} s/m^3
4-30 days	3.6×10^{-4} s/m^3
Main steam relief valve and safety valve releases(5)	
0-8 hrs	5.3×10^{-3} s/m^3
8-24 hrs	3.1×10^{-3} s/m^3
1-4 days	2.0×10^{-3} s/m^3
4-30 days	8.7×10^{-4} s/m^3
Steam line break releases	
0-8 hrs	1.9×10^{-2} s/m^3
8-24 hrs	1.1×10^{-2} s/m^3
1-4 days	7.1×10^{-3} s/m^3
4-30 days	3.1×10^{-3} s/m^3

Table 2.0-1 Key Site Parameters
(Sheet 3 of ~~5~~ 8)

Fuel handling area releases [6]	
0-8 hrs	9.9×10^{-4} s/m^3
8-24 hrs	5.9×10^{-4} s/m^3
1-4 days	3.7×10^{-4} s/m^3
4-30 days	1.6×10^{-4} s/m^3
Auxiliary building (A/B) releases (reactor coolant system sample line) [7]	
0-8 hrs	2.2×10^{-3} s/m^3
8-24 hrs	1.3×10^{-3} s/m^3
1-4 days	8.4×10^{-4} s/m^3
4-30 days	3.7×10^{-4} s/m^3
Air lock releases in containment[8]	
0-8 hrs	4.7×10^{-3} s/m^3
8-24 hrs	2.8×10^{-3} s/m^3
1-4 days	1.8×10^{-3} s/m^3
4-30 days	7.7×10^{-4} s/m^3
Atmospheric dispersion factors (χ/Q values) for MCR inleak for specified release points[3]:	
Plant vent to reactor building (R/B) door[9]	
0-8 hrs	1.3×10^{-3} s/m^3
8-24 hrs	7.7×10^{-4} s/m^3
1-4 days	4.9×10^{-4} s/m^3
4-30 days	2.2×10^{-4} s/m^3
Plant vent to A/B HVAC intake [10]	
0-8 hrs	1.4×10^{-3} s/m^3
8-24 hrs	8.0×10^{-4} s/m^3
1-4 days	5.1×10^{-4} s/m^3
4-30 days	2.2×10^{-4} s/m^3
Ground-level containment releases to Class 1E electrical room HVAC intake [4]	
0-8 hrs	2.4×10^{-3} s/m^3
8-24 hrs	1.4×10^{-3} s/m^3
1-4 days	9.1×10^{-4} s/m^3
4-30 days	4.0×10^{-4} s/m^3

Table 2.0-1 Key Site Parameters
(Sheet 4 of ~~5~~ 8)

Main steam relief valve and safety valve releases (5)	
0-8 hrs	5.3×10^{-3} s/m^3
8-24 hrs	3.1×10^{-3} s/m^3
1-4 days	2.0×10^{-3} s/m^3
4-30 days	8.7×10^{-4} s/m^3
Steam line break releases	
0-8 hrs	1.9×10^{-2} s/m^3
8-24 hrs	1.1×10^{-2} s/m^3
1-4 days	7.1×10^{-3} s/m^3
4-30 days	3.1×10^{-3} s/m^3
Fuel handling area releases (6)	
0-8 hrs	1.1×10^{-3} s/m^3
8-24 hrs	6.7×10^{-4} s/m^3
1-4 days	4.3×10^{-4} s/m^3
4-30 days	1.9×10^{-4} s/m^3
A/B releases (reactor coolant system sample line) (7)	
0-8 hrs	4.9×10^{-3} s/m^3
8-24 hrs	2.9×10^{-3} s/m^3
1-4 days	1.8×10^{-3} s/m^3
4-30 days	8.1×10^{-4} s/m^3
Air lock releases in containment(8)	
0-8 hrs	6.4×10^{-3} s/m^3
8-24 hrs	3.8×10^{-3} s/m^3
1-4 days	2.4×10^{-3} s/m^3
4-30 days	1.1×10^{-3} s/m^3
Atmospheric dispersion factors (χ/Q values) for Technical Support Center (TSC) HVAC intake for specified release points(2):	
Plant vent (4)	
0-8 hrs	1.4×10^{-3} s/m^3
8-24 hrs	8.0×10^{-4} s/m^3
1-4 days	5.1×10^{-4} s/m^3
4-30 days	2.2×10^{-4} s/m^3

Table 2.0-1 Key Site Parameters
(Sheet 5 of ~~5~~ 8)

Ground-level containment releases[4]	
0-8 hrs	1.9×10^{-3} s/m^3
8-24 hrs	1.1×10^{-3} s/m^3
1-4 days	7.2×10^{-4} s/m^3
4-30 days	3.2×10^{-4} s/m^3
Main steam relief valve and safety valve releases[5]	
0-8 hrs	1.7×10^{-3} s/m^3
8-24 hrs	9.9×10^{-4} s/m^3
1-4 days	6.3×10^{-4} s/m^3
4-30 days	2.8×10^{-4} s/m^3
Steam line break releases	
0-8 hrs	1.4×10^{-3} s/m^3
8-24 hrs	8.4×10^{-3} s/m^3
1-4 days	5.3×10^{-4} s/m^3
4-30 days	2.3×10^{-4} s/m^3
Fuel handling area releases [6]	
0-8 hrs	6.7×10^{-4} s/m^3
8-24 hrs	3.9×10^{-4} s/m^3
1-4 days	2.5×10^{-4} s/m^3
4-30 days	1.1×10^{-4} s/m^3
Auxiliary building (A/B) releases (reactor coolant system sample line) [7]	
0-8 hrs	1.0×10^{-2} s/m^3
8-24 hrs	6.2×10^{-3} s/m^3
1-4 days	3.9×10^{-3} s/m^3
4-30 days	1.7×10^{-3} s/m^3
Air lock releases in containment[8]	
0-8 hrs	1.0×10^{-3} s/m^3
8-24 hrs	6.2×10^{-4} s/m^3
1-4 days	3.9×10^{-4} s/m^3
4-30 days	1.7×10^{-4} s/m^3
Atmospheric dispersion factors (χ/Q values) for TSC inleak for specified release points[3]:	

Table 2.0-1 Key Site Parameters (Sheet 6 of 8)

Plant vent (4)	
0-8 hrs	1.4×10^{-3} s/m^3
8-24 hrs	8.0×10^{-4} s/m^3
1-4 days	5.1×10^{-4} s/m^3
4-30 days	2.2×10^{-4} s/m^3
Ground-level containment releases (4)	
0-8 hrs	1.9×10^{-3} s/m^3
8-24 hrs	1.1×10^{-3} s/m^3
1-4 days	7.2×10^{-4} s/m^3
4-30 days	3.2×10^{-4} s/m^3
Main steam relief valve and safety valve releases (5)	
0-8 hrs	1.7×10^{-3} s/m^3
8-24 hrs	9.9×10^{-4} s/m^3
1-4 days	6.3×10^{-4} s/m^3
4-30 days	2.8×10^{-4} s/m^3
Steam line break releases	
0-8 hrs	1.4×10^{-3} s/m^3
8-24 hrs	8.4×10^{-4} s/m^3
1-4 days	5.3×10^{-4} s/m^3
4-30 days	2.3×10^{-4} s/m^3
Fuel handling area releases (6)	
0-8 hrs	6.7×10^{-4} s/m^3
8-24 hrs	3.9×10^{-4} s/m^3
1-4 days	2.5×10^{-4} s/m^3
4-30 days	1.1×10^{-4} s/m^3
A/B releases (reactor coolant system sample line) (7)	
0-8 hrs	1.0×10^{-2} s/m^3
8-24 hrs	6.2×10^{-3} s/m^3
1-4 days	3.9×10^{-3} s/m^3
4-30 days	1.7×10^{-3} s/m^3

Table 2.0-1 Key Site Parameters (Sheet 7 of 8)

Air lock releases in containment[8]	
0-8 hrs	1.0×10^{-3} s/m^3
8-24 hrs	6.2×10^{-4} s/m^3
1-4 days	3.9×10^{-4} s/m^3
4-30 days	1.7×10^{-4} s/m3
Hydrologic Engineering	
Parameter Description	**Parameter Value**
Maximum flood (or tsunami) level	1 ft below plant grade
Maximum rainfall rate (hourly)	19.4 in/hr for seismic category I/II structures
Maximum rainfall rate (short-term)	6.3 in/5 min for seismic category I/II structures
Maximum groundwater level	1 ft. below plant grade
Geology, Seismology, and Geotechnical Engineering	
Parameter Description	**Parameter Value**
Maximum slope for foundation-bearing stratum	20° from horizontal in untruncated strata
Safe-shutdown earthquake (SSE) ground motion	0.3 g peak ground acceleration
SSE (certified seismic design) horizontal ground response spectra	Regulatory Guide (RG) 1.60, enhanced spectra in high frequency range (see Figure 3.7.1-1)
SSE (certified seismic design) vertical ground response spectra	RG 1.60, enhanced spectra in high frequency range (see Figure 3.7.1-2)
Potential for surface tectonic deformation at site	None within the exclusion area boundary
Subsurface stability – average static bearing capacity	15,000 lb/ft^2
Subsurface stability – average dynamic bearing capacity, normal conditions plus SSE	95,000 lb/ft^2
Subsurface stability – minimum shear wave velocity at SSE input at ground surface	1,000 ft/s
Subsurface stability – shear wave velocity for defining firm rock	3,500 ft/s
Subsurface stability – shear wave velocity for defining firm to hard rock	6,500 ft/s
Subsurface stability – shear wave velocity for defining hard rock	8,000 ft/s
Subsurface stability – liquefaction potential	None (for seismic category I structures)

Table 2.0-1 Key Site Parameters (Sheet 8 of 8)

NOTES:

1. The specified missiles are assumed to have a vertical speed component equal to 2/3 of the horizontal speed.
2. These dispersion factors are chosen as the maximum values at all intake points.
3. These dispersion factors are chosen as the maximum values at all inleak points.
4. These dispersion factors are used for a loss-of-coolant accident (LOCA) and a rod ejection accident.
5. These dispersion factors are used for a steam generator tube rupture, a steam system piping failure, a reactor coolant pump rotor seizure and a rod ejection accident.
6. These dispersion factors are used for a fuel handling accident occurring in the fuel storage and handling area.
7. These dispersion factors are used for a failure of small lines carrying primary coolant outside containment.
8. These dispersion factors are used for a fuel-handling accident inside the containment.
9. These dispersion factors are used for a LOCA.
10. These dispersion factors are used for a rod ejection accident.

Table 2.0-1 Key Site Parameters
(Sheet 8 of 8)

NOTES:

1. The specified missiles are assumed to have a vertical speed component equal to 2/3 of the horizontal speed.
2. These dispersion factors are chosen as the maximum values at all intake points.
3. These dispersion factors are chosen as the maximum values at all inleak points.
4. These dispersion factors are used for a loss-of-coolant accident (LOCA) and a rod ejection accident.
5. These dispersion factors are used for a steam generator tube rupture, a steam system piping failure, a reactor coolant pump rotor seizure and a rod ejection accident.
6. These dispersion factors are used for a fuel handling accident occurring in the fuel storage and handling area.
7. These dispersion factors are used for a failure of small lines carrying primary coolant outside containment.
8. These dispersion factors are used for a fuel-handling accident inside the containment.
9. These dispersion factors are used for a LOCA.
10. These dispersion factors are used for a rod ejection accident.
11. Normal winter precipitation roof load is determined by converting ground snow load p_g in accordance with ASCE 7-05. p_g is based on the highest ground-level weight of:
    - the 100-year return period snowpack,
    - the historical maximum snowpack,
    - the 100-year return period snowfall event, or
    - the historical maximum snowfall event in the site region.
12. The extreme winter precipitation roof load is based on the sum of the normal ground level winter precipitation plus the highest weight at ground level resulting from either the extreme frozen winter precipitation event or the extreme liquid winter precipitation event. The extreme frozen winter precipitation event is assumed to accumulate on the roof on top of the antecedent normal winter precipitation event. The extreme liquid winter precipitation event may not accumulate on the roof, depending on the geometry of the roof and the type of drainage provided. The extreme winter precipitation roof load is included as live load in extreme loading combinations using the applicable load factor indicated in DCD Section 3.8.
13. The 48-hour PMWP is based on interpolation of 24-hour PMP and 72-hour PMP data for the month of March in HMR-53 (Reference: Hydrometeorological Report No. 53, Seasonal Variation of 10-Square-Mile Probable Maximum Precipitation Estimates, United States East of the 105th Meridian, Figures 27 and 37)

2.3 Meteorology

The US-APWR is designed for meteorological information as specified in Table 2.0-1. The COL Applicant is to provide site-specific pre-operational and operational programs for meteorological measurements, and is to verify the site-specific regional climatology and local meteorology are bounded by the site parameters for the standard US-APWR design or demonstrate by some other means that the proposed facility and associated site-specific characteristics are acceptable at the proposed site.

The necessary data for COL applicant to calculate χ/Q values of MCR by using ARCON96 are shown as Table 2.3-1, 2.3-2 and 2.3-4. The necessary data for COL applicant to calculate χ/Q values of TSC by using ARCON96 are also shown as Table 2.3-3.

2.3.1 Regional Climatology

Site-specific information is provided for regional climatology, including general climate conditions and frequency of severe weather phenomena as discussed in SRP 2.3.1 (Reference 2.3-6). Refer to Subsection 3.3.2.1 for a complete summary of design basis tornado parameters, including maximum wind speed, maximum rotational speed, maximum translational speed, radius of maximum rotational wind from center of tornado, atmospheric drop, and rate of pressure change. The extreme wind speed as stated in Table 2.0-1 corresponds to the criteria described in Subsection 3.3.1.1. Ultimate heat sink (UHS) meteorological conditions are dependent on the site-specific climatology and selection of UHS type, as discussed in Subsection 9.2.5. Annual exceedance values of zero and one percent are based on the EPRI Advanced Light Water Reactor Utility Requirements Document (Reference 2.3-8) and conservative estimates of historical high and low values for potential US-APWR sites. These values are considered to bound approximately 75% to 80% of the continental US (excluding Alaska).

2.3.2 Local Meteorology

Site-specific information on local meteorology is based on long-term data from nearby reasonably representative locations and shorter-term onsite data as discussed in SRP 2.3.2 (Reference 2.3-7).

2.3.3 Onsite Meteorological Measurements Program

The site-specific pre-operational and operational programs for meteorological measurements are to be provided, which may include offsite satellite facilities. RG 1.23 (Reference 2.3-1) contains guidance on acceptable onsite meteorological programs, and any deviations from RG 1.23 guidance are to be identified and justified on a site-specific basis.

Additional sources of meteorological data is to be obtained from National Weather Service stations and other meteorological programs such as other nuclear facilities, university and private meteorological programs. These sources may be used in the description of airflow trajectories from the site to a distance of 50 miles, particularly measurements made, locations and elevations of measurements, exposure of instruments, descriptions of instruments used, and instrument performance specifications.

boundary of the LPZ, and at the MCR for postulated accidental radioactive airborne releases.

The short-term χ/Q values are site-specific parameters. The χ/Q values listed in Table 2.0-1 are bounding factors for a typical US-APWR sited in most areas of the US and can be used to calculate radiological consequences of design basis accidents. ~~The MCR χ/Q values for potential point source accident releases and the offsite χ/Q values are also defined in Table 2.0-1 to envelop most existing plant site parameters because specific site meteorological data is not available.~~ There is no site specific meteorological data in the stage of the DCD. The atmospheric dispersion factors (χ/Q values) are determined as follows.

The US-APWR χ/Q value of EAB should be determined as the representative of the US plants. Therefore, the US-APWR χ/Q value of EAB is selected to envelop most values at the corresponding EAB distance (0.5 miles) of the many existing plants. This value is reasonable in comparison with the existing plants values with different EAB distances.

The χ/Q values of LPZ are also determined by using the same method as EAB at every time interval. However, the LPZ distance of US-APWR can not be specified in the stage of the DCD. Therefore, the US-APWR χ/Q values of LPZ are determined to envelop most χ/Q values of many existing plants with LPZ distance of more than 1 mile.

The 0-8 hrs χ/Q values of MCR are calculated by some formula based on both the diffusion equations used in ARCON96 (e.g. Revision 1 to NUREG-6331) and the conservative meteorological condition referred to RG 1.194 (e.g. F stability and wind speeds of 1.0 m/s), not directly by ARCON96 itself. In this calculation formula, a multiplier is introduced to envelop the most χ/Q values of MCR of many existing plants.

By using the χ/Q values of MCR at various source-receptor distances of many existing plants, it is ensured that the above calculation formula envelops the most χ/Q values of the existing plants at any source-receptor distance, and then the US-APWR χ/Q value of MCR is determined by this calculation formula.

The other time interval χ/Q values (8-24 hrs, 24-96 hrs, 96-720 hrs) of MCR are calculated by using both the above formula of 0-8 hrs χ/Q values and the time interval factors described in RG 1.194 regulatory position 4.4. These calculated χ/Q values also envelop most existing plants values.

As a result, the US-APWR χ/Q values of EAB, LPZ and MCR in DCD Tier 2 Table 2.0-1 are representative of a reasonable number of the existing plants values. The COL Applicant is to provide conservative factors as described in SRP 2.3.4 (Reference 2.3-2). If a selected site will cause excess to the bounding χ/Q values, then the COL Applicant is to demonstrate how the dose reference values in 10 CFR 52.79(a)(1)(vi) (Reference 2.3-3) and the control room dose limits in 10 CFR 50, Appendix A, General Design Criteria 19 (Reference 2.3-4) are met using site-specific χ/Q values.The COL Applicant is to provide conservative factors as described in SRP 2.3.4 (Reference 2.3-2). If a selected site will cause excess to the bounding χ/Q values, then the COL Applicant is to demonstrate how the dose reference values in 10 CFR 50.34 (Reference 2.3-3) and the control room dose limits in 10 CFR 50, Appendix A, General Design Criteria 19 (Reference 2.3-4) are met using site-specific χ/Q values.

boundary of the LPZ, and at the MCR for postulated accidental radioactive airborne releases.

The short-term χ/Q values are site-specific parameters. The χ/Q values listed in Table 2.0-1 are bounding factors for a typical US-APWR sited in most areas of the US and can be used to calculate radiological consequences of design basis accidents. The MCR χ/Q values for potential point source accident releases and the offsite χ/Q values are also defined in Table 2.0-1 to envelop most existing plant site parameters because specific site meteorological data is not available. The COL Applicant is to provide conservative factors as described in SRP 2.3.4 (Reference 2.3-2). If a selected site will cause excess to the bounding χ/Q values, then the COL Applicant is to demonstrate how the dose reference values in 10 CFR 52.79(a)(1)(vi) (Reference 2.3-3) and the control room dose limits in 10 CFR 50, Appendix A, General Design Criteria 19 (Reference 2.3-4) are met using site-specific χ/Q values.The COL Applicant is to provide conservative factors as described in SRP 2.3.4 (Reference 2.3-2). If a selected site will cause excess to the bounding χ/Q values, then the COL Applicant is to demonstrate how the dose reference values in 10 CFR ~~50.34~~ 52.79(a)(1)(vi) (Reference 2.3-3) and the control room dose limits in 10 CFR 50, Appendix A, General Design Criteria 19 (Reference 2.3-4) are met using site-specific χ/Q values.

2.3.5 Long-Term Atmospheric Dispersion Estimates for Routine Releases

For annual average release, bounding limits of annual χ/Q values and deposition factors (D/Q values) are provided at the onsite (EAB) and offsite to evaluate individual dose.

The long-term χ/Q values at the US-APWR EAB are site-specific. The factor of the US-APWR Depleted/Undepleted/Decayed χ/Q value at the EAB bounds approximately 70% of site parameters with site boundaries located approximately 0.5 miles from the reactor. The offsite annual average χ/Q value for food production provided in Table 2.0-1 is a maximum value that is not to be exceeded. The D/Q values are limits applicable to the US-APWR standard plant at both EAB and offsite locations. The COL Applicant is to characterize the atmospheric transport and diffusion conditions necessary for estimating radiological consequences of the routine release of radioactive materials to the atmosphere, and provide realistic estimates of annual average χ/Q values and D/Q values as described in SRP 2.3.5 (Reference 2.3-5).

2.3.6 Combined License Information

COL 2.3(1) *The COL Applicant is to provide site-specific pre-operational and operational programs for meteorological measurements, and is to verify the site-specific regional climatology and local meteorology are bounded by the site parameters for the standard US-APWR design or demonstrate by some other means that the proposed facility and associated site-specific characteristics are acceptable at the proposed site.*

COL 2.3(2) *The COL Applicant is to provide conservative factors as described in SRP 2.3.4 (Reference 2.3-2). If a selected site will cause excess to the bounding χ/Q values, then the COL Applicant is to demonstrate how the dose reference values in 10 CFR ~~50.34~~ 52.79(a)(1)(vi) (Reference 2.3-3) and the control room dose limits in 10 CFR 50, Appendix A, General Design*

boundary of the LPZ, and at the MCR for postulated accidental radioactive airborne releases.

The short-term χ/Q values are site-specific parameters. The χ/Q values listed in Table 2.0-1 are bounding factors for a typical US-APWR sited in most areas of the US and can be used to calculate radiological consequences of design basis accidents. The MCR χ/Q values for potential point source accident releases and the offsite χ/Q values are also defined in Table 2.0-1 to envelop most existing plant site parameters because specific site meteorological data is not available. The COL Applicant is to provide conservative factors as described in SRP 2.3.4 (Reference 2.3-2). If a selected site will cause excess to the bounding χ/Q values, then the COL Applicant is to demonstrate how the dose reference values in 10 CFR 52.79(a)(1)(vi) (Reference 2.3-3) and the control room dose limits in 10 CFR 50, Appendix A, General Design Criteria 19 (Reference 2.3-4) are met using site-specific χ/Q values.The COL Applicant is to provide conservative factors as described in SRP 2.3.4 (Reference 2.3-2). If a selected site will cause excess to the bounding χ/Q values, then the COL Applicant is to demonstrate how the dose reference values in 10 CFR 50.34 (Reference 2.3-3) and the control room dose limits in 10 CFR 50, Appendix A, General Design Criteria 19 (Reference 2.3-4) are met using site-specific χ/Q values.

2.3.5 Long-Term Atmospheric Dispersion Estimates for Routine Releases

For annual average release, bounding limits of annual χ/Q values and deposition factors (*D/Q* values) are provided at the onsite (EAB) and offsite to evaluate individual dose.

The long-term χ/Q values at the US-APWR EAB are site-specific. ~~The factor of the US-APWR Depleted/Undepleted/Decayed χ/Q value at the EAB bounds approximately 70% of site parameters with site boundaries located approximately 0.5 miles from the reactor. The offsite annual average χ/Q value for food production provided in Table 2.0-1 is a maximum value that is not to be exceeded. The D/Q values are limits applicable to the US-APWR standard plant at both EAB and offsite locations.~~ There is no site specific meteorological data and the food production area in the stage of the DCD.

The Depleted/Undepleted/Decayed χ/Q value of EAB should be determined to envelop the most existing plant values. The US-APWR χ/Q value of EAB (0.5 miles) is selected as a representative of US-plants, to be around 70% of the highest value at the corresponding EAB distance of many existing plants. This US-APWR χ/Q value of EAB envelopes most values at the corresponding EAB distance of many existing plants.

The long-term offsite χ/Q value should be determined for the food production area. The offsite χ/Q value is defined almost to envelop the χ/Q values at locations more than the EAB distance of the US-APWR.

The *D/Q* values should be determined in a similar way as to how to determine the χ/Q values. The US-APWR *D/Q* value of the offsite boundary is conservatively assumed to be equal to the *D/Q* value of EAB. Therefore, the *D/Q* values of EAB are determined to envelop most values of some existing plants.

Therefore, it is ensured that the χ/Q values and the *D/Q* values of the US-APWR bound a reasonable number of existing plant values. The COL Applicant is to characterize the

Criteria 19 (Reference 2.3-4) are met using site-specific χ/Q values.

COL 2.3(3) The COL Applicant is to characterize the atmospheric transport and diffusion conditions necessary for estimating radiological consequences of the routine release of radioactive materials to the atmosphere, and provide realistic estimates of annual average χ/Q values and D/Q values as described in SRP 2.3.5 (Reference 2.3-5).

2.3.7 References

2.3-1 Meteorological Monitoring Programs for Nuclear Power Plants. Regulatory Guide 1.23, Rev.1, U.S. Nuclear Regulatory Commission, Washington, DC, March 2007.

2.3-2 Short-Term Atmospheric Dispersion Estimates for Accident Releases, Standard Review Plan for the Review of Safety Analysis Reports for Nuclear Power Plants. NUREG-0800, SRP 2.3.4, Rev.3, U.S. Nuclear Regulatory Commission, Washington, DC, March 2007.

2.3-3 Contents of Applications: Technical Information in the Final Safety Analysis Report ~~of Construction Permit and Operating License Applications; Technical Information~~, Title 10, Code of Federal Regulations, Part ~~50.34~~ 52.79, U.S. Nuclear Regulatory Commission, Washington, DC.

2.3-4 Criterion 19 - Control Room, General Design Criteria for Nuclear Power Plants, Energy. Title 10, Code of Federal Regulations Part 50, Appendix A, U.S. Nuclear Regulatory Commission, Washington, DC.

2.3-5 Long-Term Atmospheric Dispersion Estimates for Accident Releases, Standard Review Plan for the Review of Safety Analysis Reports for Nuclear Power Plants. NUREG-0800, SRP 2.3.5, Rev.3, U.S. Nuclear Regulatory Commission, Washington, DC, March 2007.

2.3-6 Regional Meteorology. NUREG-0800, SRP 2.3.1, Rev. 3, U.S. Nuclear Regulatory Commission, Washington, DC, March 2007.

2.3-7 Local Meteorology. NUREG-0800, SRP 2.3.2, Rev. 3, U.S. Nuclear Regulatory Commission, Washington, DC, March 2007.

2.3-8 Advanced Light Water Reactor Utility Requirements Document. Rev. 8, Electric Power Research Institute, Palo Alto, CA, March 1999.

Table 2.3-1 Common Input Parameters for χ/Q Calculation of MCR

Common parameter	
Building area (m^2)	2000 (1)
Plant vent vertical velocity (m/s)	NA (2)
Stack flow (m^3/s)	0 (3)
Stack radius (m)	0 (4)
Elevation difference (m)	0
Initial diffusion coefficient (m) (Lateral) (5)	7.98
Initial diffusion coefficient (m) (Vertical) (5)	5.03

NOTES:

(1) According to the RG 1.194, the default value (2000 m^2) is used to reasonably calculate.

(2) The plant vent vertical velocity is not used due to ground release.

(3) The stack flow is conservatively set to zero. (See the RG 1.194.)

(4) The stack radius is set to zero according to the RG 1.194 due to zero stack flow.

(5) Initial diffusion coefficient (Lateral, Vertical) are used only for the case when the source is from the surface of containment.

Table 2.3-2 Combination of Sources and Receptors for MCR (Sheet 1 of 10)

Sources	Plant vent[4]		Ground level containment release point[3][4]		Steam line break releases		Main steam safety valve release[5]		Main steam relief valve release[5]	
Receptors	**MCR HVAC intake (East)**	**MCR HVAC intake (West)**	**MCR HVAC intake (East)**	**MCR HVAC intake (West)**	**MCR HVAC intake (East)**	**MCR HVAC intake (West)**	**MCR HVAC intake (East)**	**MCR HVAC intake (West)**	**MCR HVAC intake (East)**	**MCR HVAC intake (West)**
Horizontal distance[1](m)	68	56	32	32	17	25	26	26	31	31
Vertical distance[1](m)	−52	−52	−32	−32	0.0	−8.8	−21	−21	−23	−23
Direction[2] (degree)	321	21	325	35	256	93	291	69	309	51

Table 2.3-2 Combination of Sources and Receptors for MCR (Sheet 2 of 10)

Sources	Fuel handling area[6]		Equipment hatch[7]		Air lock of containment (North)[7]		Air lock of containment (South)[7]		Reactor coolant system line[8]	
Receptors	MCR HVAC intake (East)	MCR HVAC intake (West)	MCR HVAC intake (East)	MCR HVAC intake (West)	MCR HVAC intake (East)	MCR HVAC intake (West)	MCR HVAC intake (East)	MCR HVAC intake (West)	MCR HVAC intake (East)	MCR HVAC intake (West)
Horizontal distance[1](m)	82	105	62	80	72	80	35	63	78	52
Vertical distance[1](m)	8.5	8.5	−5.2	−5.2	7.3	7.3	−5.2	−5.2	7.0	7.0
Direction[2] (degree)	360	38	347	34	342	32	342	58	316	335

Table 2.3-2 Combination of Sources and Receptors for MCR (Sheet 3 of 10)

Sources	Plant vent[4]		Ground level containment release point[3][4]		Steam line break releases		Main steam safety valve release[5]		Main steam relief valve release[5]	
Receptors	Class 1E electrical room HVAC intake (Southeast)	Class 1E electrical room HVAC Intake (Southwest)	Class 1E electrical room HVAC intake (Southeast)	Class 1E electrical room HVAC Intake (Southwest)	Class 1E electrical room HVAC intake (Southeast)	Class 1E electrical room HVAC Intake (Southwest)	Class 1E electrical room HVAC intake (Southeast)	Class 1E electrical room HVAC Intake (Southwest)	Class 1E electrical room HVAC intake (Southeast)	Class 1E electrical room HVAC Intake (Southwest)
Horizontal distance[1](m)	68	56	32	32	17	25	26	26	31	31
Vertical distance[1](m)	−52	−52	−32	−32	0.0	−8.8	−21	−21	−23	−23
Direction[2] (degree)	321	21	325	35	256	93	291	69	309	51

Table 2.3-2 Combination of Sources and Receptors for MCR (Sheet 4 of 10)

Sources	Fuel handling area[6]		Equipment hatch[7]		Air lock of containment (North) [7]		Air lock of containment (South) [7]		Reactor coolant system line[8]	
Receptors	Class 1E electrical room HVAC intake (Southeast)	Class 1E electrical room HVAC Intake (Southwest)	Class 1E electrical room HVAC intake (Southeast)	Class 1E electrical room HVAC Intake (Southwest)	Class 1E electrical room HVAC intake (Southeast)	Class 1E electrical room HVAC Intake (Southwest)	Class 1E electrical room HVAC intake (Southeast)	Class 1E electrical room HVAC Intake (Southwest)	Class 1E electrical room HVAC intake (Southeast)	Class 1E electrical room HVAC Intake (Southwest)
Horizontal distance[1](m)	82	105	62	80	72	80	35	63	78	52
Vertical distance[1](m)	8.5	8.5	−5.2	−5.2	7.3	7.3	−5.2	−5.2	7.0	7.0
Direction[2] (degree)	360	38	347	34	342	32	342	58	316	335

Table 2.3-2 Combination of Sources and Receptors for MCR (Sheet 5 of 10)

Sources	Plant vent[4]		Ground level containment release point[3][4]		Steam line break releases		Main steam safety valve release[5]		Main steam relief valve release[5]	
Receptors	Class 1E electrical room HVAC intake (Northeast)	Class 1E electrical room HVAC intake (Northwest)	Class 1E electrical room HVAC intake (Northeast)	Class 1E electrical room HVAC intake (Northwest)	Class 1E electrical room HVAC intake (Northeast)	Class 1E electrical room HVAC intake (Northwest)	Class 1E electrical room HVAC intake (Northeast)	Class 1E electrical room HVAC intake (Northwest)	Class 1E electrical room HVAC intake (Northeast)	Class 1E electrical room HVAC intake (Northwest)
Horizontal distance[1](m)	63	50	27	27	20	26	24	24	27	27
Vertical distance[1](m)	−53	−53	−33	−33	0.0	−9.8	−22	−22	−24	−24
Direction[2] (degree)	317	24	320	40	234	110	277	83	299	61

Table 2.3-2 Combination of Sources and Receptors for MCR (Sheet 6 of 10)

Sources	Fuel handling area[6]		Equipment hatch[7]		Air lock of containment (North)[7]		Air lock of containment (South)[7]		Reactor coolant system line[8]	
Receptors	Class 1E electrical room HVAC intake (Northeast)	Class 1E electrical room HVAC intake (Northwest)	Class 1E electrical room HVAC intake (Northeast)	Class 1E electrical room HVAC intake (Northwest)	Class 1E electrical room HVAC intake (Northeast)	Class 1E electrical room HVAC intake (Northwest)	Class 1E electrical room HVAC intake (Northeast)	Class 1E electrical room HVAC intake (Northwest)	Class 1E electrical room HVAC intake (Northeast)	Class 1E electrical room HVAC intake (Northwest)
Horizontal distance[1](m)	76	100	56	75	66	75	29	60	73	46
Vertical distance[1](m)	8.5	8.5	−5.8	−5.8	7.3	7.3	−5.8	−5.8	7.0	7.0
Direction[2] (degree)	360	41	346	36	340	35	338	64	313	331

Table 2.3-2 Combination of Sources and Receptors for MCR (Sheet 7 of 10)

Sources	Plant vent[4]		Ground level containment release point[3][4]		Steam line break releases		Main steam safety valve release[5]		Main steam relief valve release[5]	
Receptors	A/B HVAC intake (North)	A/B HVAC intake (South)	A/B HVAC intake (North)	A/B HVAC intake (South)	A/B HVAC intake (North)	A/B HVAC intake (South)	A/B HVAC intake (North)	A/B HVAC intake (South)	A/B HVAC intake (North)	A/B HVAC intake (South)
Horizontal distance[1](m)	55	60	44	46	84	67	72	61	69	60
Vertical distance[1](m)	−43	−43	−22	−22	0.0	0.0	−11	−11	−13	−13
Direction[2] (degree)	92	65	98	75	135	118	125	103	121	98

Table 2.3-2 Combination of Sources and Receptors for MCR (Sheet 8 of 10)

Sources	Fuel handling area[6]		Equipment hatch[7]		Air lock of containment (North) [7]		Air lock of containment (South) [7]	
Receptors	**A/B HVAC intake (North)**	**A/B HVAC intake (South)**	**A/B HVAC intake (North)**	**A/B HVAC intake (South)**	**A/B HVAC intake (North)**	**A/B HVAC intake (South)**	**A/B HVAC intake (North)**	**A/B HVAC intake (South)**
Horizontal distance[1](m)	103	114	80	88	79	87	92	89
Vertical distance[1](m)	17	17	0.6	0.6	16	16	0.6	0.6
Direction[2] (degree)	75	61	82	64	81	63	104	87

Table 2.3-2 Combination of Sources and Receptors for MCR (Sheet 9 of 10)

Sources	Plant vent[4]	Ground level containment release point[3][4]	Steam line break releases	Main steam safety valve release[5]	Main steam relief valve release[5]
Receptors	**R/B door (West)**	**R/B door (West)**	**R/B door (West)**	**R/B door (West)**	**R/B door (West)**
Horizontal distance[1](m)	37	17	33	24	24
Vertical distance[1](m)	−60	−39	−16	−29	−30
Direction[2] (degree)	33	53	132	101	88

Table 2.3-2 Combination of Sources and Receptors for MCR (Sheet 10 of 10)

Sources	Fuel handling area(6)	Equipment hatch(7)	Air lock of containment (North) (7)	Air lock of containment (South) (7)	Reactor coolant system line(8)
Receptors	**R/B door (West)**	**R/B door (West)**	**R/B door (West)**	**R/B door (West)**	**R/B door (West)**
Horizontal distance(1)(m)	89	64	64	55	34
Vertical distance(1)(m)	1.5	−12	0.3	−12	0.0
Direction(2) (degree)	47	44	42	77	320

NOTES:
(1) Distance from sources to receptors.
(2) The angle of receptors from Plant North centering on sources (Direction increases in a clockwise fashion based on the Plant North, i.e. The Plant North is 0 degree.)
(3) Area source
(4) These parameters are used for a LOCA and a rod ejection accident.
(5) These parameters are used for a steam generator tube rupture, a steam system piping failure, a reactor coolant pump rotor seizure and a rod ejection accident.
(6) These parameters are used for a fuel handling accident occurring in the fuel storage and handling area.
(7) These parameters are used for a fuel-handling accident inside the containment.
(8) These parameters are used for a failure of small lines carrying primary coolant outside containment.

It should be noted that the χ/Q values of MCR can not be directly calculated by ARCON96 itself because there is no site specific meteorological data in the stage of the DCD. Therefore, the diffusion equations described in ARCON96 (e.g. Revision 1 to NUREG-6331) are used for calculating the χ/Q values of MCR, together with the conservative meteorological condition based on RG 1.194 (e.g., F stability with wind speeds of 1.0 m/s).

(low-level outlet and emergency spillway) and describes verified runoff models (e.g., unit hydrographs), flood routing, spillway design, and outlet protection.

2.4.9 Channel Diversions

The potential for upstream diversion or rerouting of the source of cooling water (resulting from, for example, channel migration, river cutoffs, ice jams, or subsidence) is considered with respect to site-specific seismic, topographical, geologic, and thermal evidence in the region.

2.4.10 Flooding Protection Requirements

The static and dynamic consequences of any type of flooding are considered on each pertinent safety-related facility. Refer to Section 3.4 for information relating to flood design, and Section 3.8 for information relating to the qualification of buildings and structures subjected to flooding loads.

2.4.11 Low Water Considerations

The US-APWR has a cooling water volume requirement following SSE shutdown. Low water conditions are described as part of the site-specific hydrologic engineering evaluation, including how this volume of cooling water will be available for safety basis events.

The site-specific summary is to include the minimum safety-related cooling water flow, the sump invert elevation and configuration, the minimum design operating level, pump submergence elevations (operating heads), and design bases for effluent submergence, mixing, and dispersion. The cooling water pumps are to maintain a sufficient water supply during periods of low water resulting from a 100-year drought. Refer to Table 2.4-1 for normal system water demands during normal plant operation. Subsections 9.2.1, 9.2.5, and 10.4.5 of the FSAR may be referenced where applicable, as may institutional restraints on water use. The site-specific analysis also considers other uses of water drawn from the UHS, such as fire water or system charging requirements.

2.4.12 Ground Water

Ground water conditions and issues relative to the US-APWR are site-specific, including monitoring and safeguards requirements to be implemented to the design and operational requirements discussed in RG 4.21. A conservative analysis includes critical ground water pathways for a liquid effluent release at the site and an evaluation (where applicable) of the dispersion, ion-exchange, and dilution capability of the ground water environment with respect to present and projected users. Pathways are evaluated for the potential to contaminate nearby ground water users and to water bodies such as springs, lakes, or streams.

The maximum site-specific operational ground water level is determined for ground-water-induced hydrostatic loadings on subsurface portions of safety-related SSC. Where dewatering during construction is critical to the integrity of safety-related structures, the bases for subsurface hydrostatic loadings assumed during construction and the dewatering methods to be employed in achieving these loadings are to be discussed.

2.4.13 Accident Releases of Radioactive Liquid Effluent in Ground and Surface Waters

The site is evaluated for the ability of the ground and surface water environment to delay, disperse, dilute, or concentrate liquid effluents, as related to existing or potential future water users. The bases used to determine dilution factors, dispersion coefficients, flow velocities, travel times, adsorption, and pathways of liquid contaminants is to be discussed, including references to the locations and users of surface waters, and the site-specific release points.

2.4.14 Technical Specification and Emergency Operation Requirements

Any emergency protective measures designed to minimize the impact of adverse hydrology-related events on safety-related facilities are described on a site-specific basis. Applicable site-specific information includes the manner in which to incorporate these requirements into appropriate TSs and emergency procedures, and the need for any TSs for plant shutdown to minimize the consequences of an accident resulting from hydrologic phenomena such as floods or the degradation of the UHS. The potential effects of seismic and non-seismic information on the postulated technical specifications and emergency operations is also to be evaluated for the proposed plant site. If emergency procedures are used to meet safety requirements associated with hydrologic events, the event is to be identified, and appropriate water levels and lead times available are to be provided.

2.4.15 Combined License Information

COL 2.4(1) The COL Applicant is to provide sufficient information to verify that hydrologic-related events will not affect the safety-basis for the US-APWR.

2.4.16 References

2.4-1 Minimization of Contamination and Radioactive Waste Generation: Life-Cycle Planning. Regulatory Guide 4.21, Rev. 0, U.S. Nuclear Regulatory Commission, Washington, DC, June 2008.

- Thickness
- Seismic compressional and shear velocities
- Bulk densities
- Soil index properties and classification
- Shear modulus and damping variations with strain level
- Water table elevation and its variations

2.5.2.6 Ground Motion Response Spectrum (GMRS)

The site-specific GMRS is provided at a sufficient number of frequencies (at least 25) such that it adequately represents the local and regional seismic hazards. The vertical to horizontal (V/H) response spectral ratio used to determine the vertical GMRS from the horizontal GMRS is also to be provided. Further discussion of the GMRS is provided in Subsection 3.7.1.1.

2.5.3 Surface Faulting

Detailed surface and subsurface geological, seismological, and geophysical investigations performed around the site are compiled on a site-specific basis. Sufficient surface and subsurface information, supported by detailed investigations, either confirms the absence of surface tectonic deformation (i.e., faulting) or, if surface deformation is present, demonstrates the age of its most recent displacement and ages of previous displacements. If tectonic deformation is present in the site vicinity, the geometry, amount and sense of displacement, recurrence rate, and age of latest movement is to be defined.

The structure and generic relationship between site area faulting or other tectonic deformation and the regional tectonic framework are discussed on a site-specific basis. For regions with active tectonics, a discussion is provided of any detailed geologic and geophysical investigations conducted to demonstrate the structural relationships of site area faults with regional faults known to be seismically active.

2.5.4 Stability of Subsurface Materials and Foundations

Site-specific information is provided concerning the properties and stability of all soils and rock that may affect the nuclear power plant facilities, under both static and dynamic conditions, including the vibratory ground motions associated with the GMRS. The acceptability of soil materials is to be discussed to assure the consistency between the assumptions made in Section 3.7.2 and the site specific conditions identified within this subsection.

2.5.4.1 Geologic Features

Site-specific geologic features are to be discussed, including the following information:

1. Areas of actual or potential surface or subsurface subsidence, solution activity, uplift, or collapse and the causes of these condition

3. Compaction specifications and embankment and foundation designs

4. Dewatering and excavation methods and control of ground water during excavation to preclude degradation of foundation materials, including a discussion of proposed quality control and Quality Assurance programs related to foundation excavation, and subsequent protection and treatment, and measures to monitor foundation rebound and heave.

2.5.4.6 Ground Water Conditions

Site-specific ground water conditions include the following information:

1. Ground water conditions relative to the foundation stability of the safety-related nuclear power plant facilities

2. Plans for dewatering during construction

3. Plans for analysis and interpretation of seepage and potential piping conditions during construction

4. Records of field and laboratory permeability tests

5. History of ground water fluctuations, as determined by periodic monitoring of local wells and piezometers, including flood conditions

If the analysis of ground water at the site has not been completed at the time the COLA, a description of the implementation program, including milestones, is to be included.

2.5.4.7 Response of Soil and Rock to Dynamic Loading

The response of soil and rock to dynamic loading is to be provided, including the following information as appropriate:

1. Any investigations to determine the effects of prior earthquakes on the soils and rocks in the vicinity of the site, including evidence of liquefaction and sand cone formation

2. Compressional and shear (P and S) wave velocity profiles, as determined from field seismic surveys (surface refraction and reflection and in-hole and cross-hole seismic explorations), including data and interpretation of the data

3. Results of dynamic tests in the laboratory on samples of the soil and rock

2.5.4.8 Liquefaction Potential

The US-APWR standard plant design is based on the premise that there is no potential of liquefaction occurring at the site. Site-specific foundation materials adjacent to and under safety-related structures that are saturated soils, or soils that have a potential to become saturated and the water table is above bedrock, are analyzed for the potential of liquefaction occurring at the site.

2.5.4.9 Earthquake Site Characteristics

2.5.4.10 Static Stability

The stability of all safety-related facilities for static loading conditions is analyzed for site-specific conditions including foundation rebound, settlement, differential settlement, and bearing capacity under the dead loads of fills and plant facilities. A discussion and evaluation of lateral earth pressures and hydrostatic ground water loads acting on plant facilities is included.

2.5.4.11 Design Criteria

Site-specific design criteria and methods of design used in the stability studies of all safety-related facilities are provided, including how they compare to the geologic and seismic site characteristics. The required and computed factors of safety, assumptions, and conservatisms in each analysis are to be identified, and any computer analyses used are to be explained and verified.

2.5.4.12 Techniques to Improve Subsurface Conditions

If applicable, a discussion is to be prepared and specifications provided for any measures to improve foundations, such as grouting, vibroflotation, dental work, rock bolting, and anchors. A verification program designed to permit a thorough evaluation of the effectiveness of foundation improvement measures is also to be discussed. If the foundation improvement verification program discussed in this section has not been completed at the time of the COLA, a description of the implementation program, including milestones, is to be included.

2.5.5 Stability of Slopes

The US-APWR standard plant design is based on the premise that there is no site-specific potential for slope failure that could jeopardize safety-related SSCs. Site-specific information is presented concerning the static and dynamic stability of all natural and manmade earth or rock slopes (such as cuts, fills, embankments, and dams) for which failure, under any of the conditions to which they could be exposed during the life of the plant, could adversely affect the safety of the nuclear power plant facilities.

2.5.6 Combined License Information

COL 2.5(1) The COL Applicant is to provide sufficient information regarding the seismic and geologic characteristics of the site and the region surrounding the site.

2.5.7 References

2.5-1 Design Response Spectra for Seismic Design of Nuclear Power Plants. Regulatory Guide 1.60, Rev. 1, U.S. Nuclear Regulatory Commission, Washington, DC, December 1973.

2.5-2 Site Investigations for Foundations of Nuclear Power Plants. Regulatory Guide 1.132, Rev. 2, U.S. Nuclear Regulatory Commission, Washington, DC, October 2003.

Chapter 3

Pipe whip restraints are provided when the whipping pipe could impair the capability of any essential system or component to perform its intended function. Pipe whip restraints are located within the length of location of plastic hinge formation when permissible. If it is not possible to locate the whip restraint within the length of plastic hinge, the consequences of pipe whipping and jet impingement effect are further investigated.

K. The pipe break reaction force and jet impingement force calculation considers the fluid internal energy considering any line restrictions (that is, flow limiter) between the pressure source and break location and the absence of energy reservoirs, as applicable.

L. Jet loads resulting from postulated pipe break in a high pressure steam system (pressure greater than 870 psia) or sub-cooled water which would flash at the break, are evaluated as follows:

1. Any directly impacted component within 10 pipe diameters is assumed to fail, unless the components is required for safe shutdown and accident mitigation capability in which case the jet loads are computed and evaluated based on the criteria given in Subsection 3.6.2.3.

2. Based on NUREG CR-2913 (Reference 3.6-8), components beyond 10 pipe diameter range are ~~considered as un-damaged and functional~~ properly evaluated based on the computed jet impingement force.

M. By definition, a non-essential system is not required for safe shutdown of the nuclear plant following a postulated pipe rupture accident scenario and as such, it is not required to be evaluated for pipe rupture protection. However, if a non-essential system or a portion of it, which is affected by a specific piping failure event that could potentially affect an essential system or component, then it is evaluated for pipe rupture protection per the rules of this section.

N. The environmental effects of a postulated piping failure do not preclude habitability of the MCR or access to surrounding areas important to the safe control of reactor operations needed to cope with the consequences of the piping failure.

The capability of all essential components to perform their intended safety functions is maintained.

3.6.1.2 Safety Evaluation

3.6.1.2.1 General

Safety evaluations assess safety-related systems and components for the adequacy of their intended protective actions and measures in the event of postulated pipe failures, including those required to mitigate the consequences of the failure. Protective measures include separation, barriers, and restraints as discussed below.

main steam isolation valve compartment are thick, reinforced concrete floors. Refer to Subsection 3.6.2.1 for discussion applicable to PCCV penetrations in the main steam pipe room.

The main steam pipe room is evaluated using criteria for the evaluation of a one square foot longitudinal break in a break exclusion area. This location is evaluated for the effects of flooding, spray wetting, and subcompartment pressurization resulting from a postulated one square foot break of either a main steam or feedwater line. The MCR is not affected by any of the effects of a postulated break of this piping.

~~**3.6.1.2.3.3 PCCV Penetration of High Energy Lines**~~

~~As discussed in Subsection 3.6.2.1, anchors or five-way restraints (free in the axial direction) are installed at each PCCV penetration. The anchor/restraints are located as close as practical to the containment isolation valves inside and/or outside of the PCCV. This configuration maintains isolation valve operability and integrity of the PCCV penetration area during a postulated break.~~

3.6.1.3 Postulated Failures Associated with Site-Specific Piping

The COL Applicant is to identify the site-specific systems or components that are safety-related or required for safe shutdown that are located near high-energy or moderate-energy piping systems, and are susceptible to the consequences of these piping failures. The COL Applicant is to provide a list of site-specific high-energy and moderate-energy piping systems, which includes a description of the layout of all piping systems where physical arrangement of the piping systems provides the required protection, the design basis of structures and compartments used to protect nearby essential systems or components, or the arrangements to assure the operability of safety-related features where neither separation nor protective enclosures are practical. Additionally, the COL Applicant is to provide the failure modes and effect analyses that verifies the consequences of failures in site-specific high-energy and moderate-energy piping does not affect the ability to safely shut down the plant.

3.6.2 Determination of Rupture Locations and Dynamic Effects Associated with the Postulated Rupture of Piping

This section describes the design bases for locating postulated breaks and cracks in high- and moderate-energy piping systems inside and outside PCCV; the methods used to define the jet thrust reaction force at the break location; the procedures used to define jet impingement loading on adjacent safety-related systems or components; and the design criteria for pipe whip restraint, jet impingement barriers and shields and guard pipes. Dynamic effects such as pipe whip and jet impingement need not be evaluated in several high energy systems, including the RCL and surge line when LBB criteria successfully are applied (see Subsection 3.6.3).

The plant meets the relevant requirements of GDC 4 as follows:

(1) Criteria defining postulated pipe rupture locations and configurations inside and outside the PCCV are defined in Subsection 3.6.2.1 and are per BTP 3-4 (Reference 3.6-5).

(2) Protection against postulated pipe rupture outside the PCCV is provided per BTP 3-3 (Reference 3.6-6).

(3) Detailed acceptance criteria covering pipe-whip dynamic analysis, including the determination of the forcing functions of the jet thrust and the jet impingements are provided in Subsection 3.6.2.3 and per Section III of SRP 3.6.2 (Reference 3.6-3). The general bases and assumptions of the analysis are per BTP 3-4 (Reference 3.6-5).

3.6.2.1 Criteria used to Define Break and Crack Location and Configuration

The following subsections establish the criteria used for selecting the locations and configuration of the postulated breaks and cracks, except for piping that satisfies the requirements for LBB described in Subsection 3.6.3.

The COL Applicant is to implement the criteria of the following subsections for defining break and crack locations and configurations, and the locations and configurations of design basis pipe break and crack locations and configurations for site-specific high-energy and moderate-energy piping systems. The COL Applicant is to identify the postulated rupture orientation of each postulated break location for site-specific high-energy and moderate-energy piping systems. The COL Applicant is to implement the appropriate methods to assure that as-built configuration of site-specific high-energy and moderate-energy piping systems is consistent with the design intent and provide as-built drawings showing component locations and support locations and types that confirms this consistency.

3.6.2.1.1 High-Energy Fluid Systems Piping

3.6.2.1.1.1 High-Energy Fluid System Piping in PCCV Penetration Area

~~Breaks and cracks are not postulated in the portions of piping from the PCCV penetration to an anchor or five-way restraint.~~ Breaks and cracks need not be postulated in those portions of piping from containment wall to and including the inboard or outboard isolation valves. This portion of piping meets the following criteria.

All piping in the PCCV penetration area defined above is ASME Code, Section III, Class 2 (Reference 3.6-9). For ASME Code, Section III, Class 2 piping the following design criteria are met.

(1) The design criteria of the ASME Code, Section III (Reference 3.6-10), Subarticle NE-1120, is satisfied for the PCCV penetration.

(2) Stresses do not exceed those specified within Subsection 3.6.2.1.1.2.

(3) The maximum stress in this piping as calculated by Equation 9, of paragraph NC-3653 of ASME Code, Section III (Reference 3.6-9) does not exceed the smaller of 2.25 S_h or 1.8 S_y, when subjected to primary loads, including those which are deflection-limited by whip restraints, and the combined loading of internal pressure, dead weight and postulated pipe rupture beyond this portion of piping, except that following a failure outside containment, the pipe between the outboard isolation valve and the first restraint may be permitted higher stresses provided a plastic hinge is not formed, operability of the valves with such stresses is ensured in accordance with the criteria specified in SRP Section 3.9.3,

the piping between the outboard isolation valve and the restraint is constructed in accordance with the Power Piping Code ANSI B31.1 and the piping should either be of seamless construction with full radiography of all circumferential welds or all longitudinal and circumferential welds should be fully radiographed.

Primary loads include those which are deflection-limited by whip restraints.

(4) The number of circumferential and longitudinal piping welds and branch connections are minimized.

(5) Welded attachments, for pipe supports or other purposes, to this portion of piping are avoided. Where welded attachments are necessary, the welds are 100% volumetrically examinable and detailed stress analyses are performed to demonstrate compliance with the limits of Subsection 3.6.2.1.1.2.

(6) 100% volumetric examination in accordance with IWA-2400 of ASME Code, Section XI (Reference 3.6-11) of all piping welds is performed.

(7) Anchors or five way restraints do not prevent the access required to conduct inservice examination specified in ASME Code, Section XI (Reference 3.6-11). ISI completed during each inspection interval provides examination of circumferential and longitudinal welds within the boundary of this portion of piping.

(8) The length of these portions of piping is to be reduced to the minimum length practical.

Application to Main Steam Pipe Room

No breaks are postulated in the main steam supply system (MSS) and feedwater system (FWS) piping from the PCCV penetration outboard weld to the wall of main steam pipe room (Figure 3.6-1) provided the following actions are taken:

- The pipe is routed straight to lower the stresses.
- Five–way restraint (free only in axial direction) is installed in the main steam pipe room wall penetration.
- Essential equipment is protected from the environmental, flooding, and subcompartment pressurization effects of an assumed non-mechanistic longitudinal break. Each assumed non-mechanistic break has a cross sectional area of one square foot and postulated to occur at a location that has the greatest effect on essential equipment.

3.6.2.1.1.2 Postulation of Pipe Breaks in Areas Other than PCCV Penetrations

The locations for postulated breaks in high-energy piping are dependent on the classification, quality group, and design standards used for the piping system. The break locations for high-energy piping are described in the following sections. These locations are postulated based on “as-designed” analyses using the design configuration. As a result of piping reanalysis, due to differences between the design configuration and the as-built configuration, the high stress and usage factor location may be shifted. The

volumetrically examinable and detailed stress analyses are performed to demonstrate compliance with the limits of Subsection 3.6.2.1.1.2.

(1) 100% volumetric examination in accordance with IWA-2400 of ASME Code, Section XI (Reference 3.6-11) of all piping welds is performed.

(2) Anchors or five way restraints do not prevent the access required to conduct inservice examination specified in ASME Code, Section XI (Reference 3.6-11). ISI completed during each inspection interval provides examination of circumferential and longitudinal welds within the boundary of this portion of piping.

Application to Main Steam Pipe Room

No breaks are postulated in the main steam supply system (MSS) and feedwater system (FWS) piping from the PCCV penetration outboard weld to the wall of main steam pipe room (Figure 3.6-1) provided the following actions are taken:

- The pipe is routed straight to lower the stresses.
- Five–way restraint (free only in axial direction) is installed in the main steam pipe room wall penetration.
- Essential equipment is protected from the environmental, flooding, and subcompartment pressurization effects of an assumed non-mechanistic longitudinal break. Each assumed non-mechanistic break has a cross sectional area of one square foot and postulated to occur at a location that has the greatest effect on essential equipment.

3.6.2.1.1.2 Postulation of Pipe Breaks in Areas Other than PCCV Penetrations

The locations for postulated breaks in high-energy piping are dependent on the classification, quality group, and design standards used for the piping system. The break locations for high-energy piping are described in the following sections. These locations are postulated based on “as-designed” analyses using the design configuration. As a result of piping reanalysis, due to differences between the design configuration and the as-built configuration, the high stress and usage factor location may be shifted. The intermediate break (if any) locations need not be changed unless one of the following conditions exists:

a. The dynamic effects from the new (as-built) intermediate break locations are not mitigated by the original pipe whip restraint and jet shields.

b. There is significant change in pipe design parameters such as pipe size, wall thickness, or pressure rating.

For structures that separate a high-energy line from an essential component, the separating structure is designed to withstand the consequences of the pipe break in the high-energy line, which produces the greatest effect at the structure, irrespective of the fact that the following criteria might not need such a break location to be postulated.

3.6.2.1.1.3 Postulation of Leakage Cracks in Areas Other than PCCV Penetrations

Leakage cracks in high energy piping are postulated as follows:

- For ASME Code, Section III (Reference 3.6-12), Division 1, Class 1 piping, at axial locations where the calculated stress range by Equation 10 in NB-3653 exceeds 1.2 S_m.
- For ASME Code, Section III (Reference 3.6-9), Division 1, Class 2 and 3 piping, at axial locations where calculated stress by the sum of Equations 9 and 10 in NC/ND-3653 exceeds 0.4 times the sum of the stress limits given in NC/ND-3653.
- For seismically analyzed non-ASME Class piping at the locations defined in the same way as ASME Code, Section III (Reference 3.6-9), Class 3 piping.
- For non-ASME Class piping, which has not been evaluated to obtain stress information, leakage cracks are postulated at axial locations that produce the most severe environmental effects.

3.6.2.1.2 Moderate-Energy Fluid System Piping Break Locations

3.6.2.1.2.1 Moderate-Energy Fluid System Piping in PCCV Penetration Areas

Leakage cracks are not postulated in those portion of the piping from PCCV wall to and including the inboard and outboard isolation valves provided that the PCCV penetration meets the requirements of ASME Code, Section III (Reference 3.6-10), Subarticle NE-1120 and the piping is designed so that the maximum stress range based on the sum of Equations (9) and (10) in Subarticle NC/ND-3653 of the ASME Code, Section III (Reference 3.6-9) does not exceed 0.4 times the sum of the stress limits given in NC/ND-3653.

3.6.2.1.2.2 Moderate-Energy Fluid System Piping in Areas Other than PCCV Penetrations

Leakage cracks are postulated in the following piping systems located adjacent to SSCs ~~required for safe shutdown~~ important to safety.

- For ASME Code, Section III (Reference 3.6-9), Class 2 and 3 and non-safety class piping, at axial locations where calculated stress by the sum of Equations 9 and 10 in NC/ND-3653 exceed 0.4 times the sum of the stress limits given in NC/ND-3653.
- For non-safety class piping, which has not been evaluated to obtain stress information, leakage cracks are postulated at axial locations that produce the most severe environmental effects.

Leakage cracks are not postulated in moderate-energy fluid system piping located in an area where a break in the high-energy fluid system is postulated, provided that such a crack does not result in environmental conditions more severe than the high-energy break.

3.6.2.1.1.3 Postulation of Leakage Cracks in Areas Other than PCCV Penetrations

Leakage cracks in high energy piping are postulated as follows:

- For ASME Code, Section III (Reference 3.6-12), Division 1, Class 1 piping, at axial locations where the calculated stress range by Equation 10 in NB-3653 exceeds 1.2 S_m.
- For ASME Code, Section III (Reference 3.6-9), Division 1, Class 2 and 3 piping, at axial locations where calculated stress by the sum of Equations 9 and 10 in NC/ND-3653 exceeds 0.4 times the sum of the stress limits given in NC/ND-3653.
- For seismically analyzed non-ASME Class piping at the locations defined in the same way as ASME Code, Section III (Reference 3.6-9), Class 3 piping.
- For non-ASME Class piping, which has not been evaluated to obtain stress information, leakage cracks are postulated at axial locations that produce the most severe environmental effects.

3.6.2.1.2 Moderate-Energy Fluid System Piping Break Locations

3.6.2.1.2.1 Moderate-Energy Fluid System Piping in PCCV Penetration Areas

Leakage cracks are not postulated in those portion of the piping from PCCV wall to and including the inboard and outboard isolation valves provided that the PCCV penetration meets the requirements of ASME Code, Section III (Reference 3.6-10), Subarticle NE-1120 and the piping is designed so that the maximum stress range based on the sum of Equations (9) and (10) in Subarticle NC/ND-3653 of the ASME Code, Section III (Reference 3.6-9) does not exceed 0.4 times the sum of the stress limits given in NC/ND-3653.

3.6.2.1.2.2 Moderate-Energy Fluid System Piping in Areas Other than PCCV Penetrations

Leakage cracks are postulated in the following piping systems located adjacent to SSCs required for safe shutdown.

- For ASME Code, Section III, Class 1 piping, where the stress range calculated by Eq. (10) in NB-3653 is less than 1.2 S(m).
- For ASME Code, Section III (Reference 3.6-9), Class 2 and 3 and non-safety class piping, at axial locations where calculated stress by the sum of Equations 9 and 10 in NC/ND-3653 exceed 0.4 times the sum of the stress limits given in NC/ND-3653.
- For non-safety class piping, which has not been evaluated to obtain stress information, leakage cracks are postulated at axial locations that produce the most severe environmental effects.

Leakage cracks are not postulated in moderate-energy fluid system piping located in an area where a break in the high-energy fluid system is postulated, provided that such a

3.6.2.1.3 Types of Break/Cracks Postulated

3.6.2.1.3.1 Circumferential Pipe Breaks

Circumferential breaks are postulated in high-energy fluid system piping and branch runs exceeding a nominal pipe size of 1 inch at locations identified by the criteria in Subsection 3.6.2.1.1.2

No breaks are postulated in piping having a nominal diameter less than 1 inch, including instrument lines that are designed in accordance with RG 1.11 (Reference 3.6-13).

If the maximum stress range exceeds the limits specified in Subsection 3.6.2.1.1.2 and the circumferential stress range is greater than 1.5 times the axial stress range, no circumferential break is postulated; only a longitudinal break (Subsection 3.6.2.1.3.2) is postulated.

Where break locations are selected without the benefit of stress calculations, breaks are postulated at the piping welds to each fitting, valve, or welded attachment. The line restrictions, flow limiters, positive pump-controlled flow and the absence of energy reservoirs may be taken into account, as applicable.

Following a circumferential break, the two ends of the broken pipe are assumed to move clear of each other unless physically limited by piping restraints, structural members, or pipe stiffness. The effective cross sectional (inside diameter) flow area of the pipe is used in the jet discharge evaluation. Pipe whipping is assumed to occur in the plane defined by the piping geometry and configuration and to initiate pipe movement in the direction of the jet reaction.

3.6.2.1.3.2 Longitudinal Pipe Breaks

Longitudinal breaks are postulated in high-energy fluid system piping and branch runs in nominal pipe sizes 4 inches and larger. Longitudinal breaks are postulated in high- energy fluid system piping at locations of circumferential breaks as described in Subsection 3.6.2.1.3.1.

If the maximum stress range exceeds the limits specified in Subsection 3.6.2.1.1.2 and the axial stress range is greater than 1.5 times the circumferential stress range, no longitudinal break is postulated, only a circumferential break (Subsection 3.6.2.1.3.1) is postulated.

Longitudinal breaks need not be postulated at terminal ends.

Longitudinal breaks in the form of axial split without pipe severance are postulated in the center of the piping at two diametrically opposed points (but not concurrently) located so that the reaction force is perpendicular to the plane of piping configuration and produces out-of-plane bending. Alternatively, a single split is assumed at the section of highest tensile stress as determined by detailed stress analysis (e.g., finite element analysis).

For longitudinal breaks, the dynamic force of the fluid jet discharge is based on a circular or elliptical (2D x 1/2D) break area equal to the effective cross-sectional flow area of the pipe at the break location and on a calculated fluid pressure modified by an analytically

If the above evaluation determines that no safety-related SSCs are damaged, then dynamic analysis is not necessary. If the above evaluation determines that the structural integrity of safety-related SSCs is impaired, pipe whip restraints are incorporated in the high-energy-fluid system piping of concern and dynamic analysis is conducted for the system including the piping and the pipe whip restraints.

In general, a gap is provided between a pipe whip restraint and pipe so as not to restrict thermal movement in the pipe. In the event of a pipe-break accident, the pipe accelerates in the gap due to the jet force and collides with the pipe whip restraint. The dynamic effects of this pipe and pipe whip restraint are usually evaluated by the energy balance method.

Conservatively assuming a fixed jet force at maximum load as described in Subsection 3.6.2.3, the maximum displacement of the pipe and pipe whip restraint can be given by the following equation based on the energy balance method.

$$\left[\text{work done on system}\right] = \left[\begin{array}{l}\text{energy absorbed by pipe} + \\ \qquad\text{energy absorbed by restraint}\end{array}\right] \quad (1)$$

Generally, in Equation (1), energy absorbed by the system is conservatively ignored so that the maximum displacement of the pipe and pipe whip restraint is given by the following equation.

$$\text{work done on system} = \text{energy absorbed by restraint} \quad (2)$$

See Subsection 3.6.2.4.4.1 for the design methodology for pipe whip restraints.

When making a more detailed evaluation, the piping system and pipe whip restraints are modeled without taking credit for the supports designed using operational loads and a time history analysis performed.

The five-way restraint is installed for main steam piping and feedwater piping outside of the PCCV to prevent a load from being applied to the CV isolation valve due to a postulated pipe break outside of break exclusion zone.

In other cases, the subject valve is installed sufficiently away from a postulated break location to prevent dynamic effects. Furthermore, the pipe stress in the vicinity of the valve is validated as very small by using a static force displacement methodology for the pipe displacement at the break location.

3.6.2.4.2.3 Closure of the Feedwater Check Valve

This loading has a short duration of approximately 0.5 seconds and arises from rapidly traveling pressure waves in piping systems connected to the broken piping system. The closure of the feedwater check valve due to a postulated pipe rupture upstream of the valve can increase the magnitude of these loads.

For piping systems with closing check valves, the magnitude of the loadings depends on the valve closure time, with shorter closing times generally causing higher loadings.

3.6.3 LBB Evaluation Procedures

This subsection describes the design basis to eliminate the dynamic effects of pipe rupture (Subsection 3.6.2) for the selected high-energy piping systems of RCL piping, RCL branch piping, and main steam piping. GDC 4 of Appendix A to 10 CFR 50 (Reference 3.6-1) allows exclusion of dynamic effects associated with pipe rupture from the design basis, when analyses demonstrate that the probability of pipe rupture is extremely low for the applied loading resulting from normal conditions, anticipated transients and a postulated SSE. The LBB evaluation is performed in accordance with SRP 3.6.3 (Reference 3.6-4).

The LBB analysis combines normal and abnormal (including seismic) loads to determine a critical crack size for a postulated pipe break. The critical crack size is compared to the size of a leakage crack for which detection is certain. If the leakage crack size is sufficiently smaller than the critical crack size, the LBB requirements are satisfied.

The piping systems, for which the LBB criterion is not applied, are evaluated for dynamic effects of postulated pipe rupture at locations defined in Subsection 3.6.2. For piping systems for which LBB is demonstrated, the evaluation of environmental effects including spray wetting, and flooding is still performed for breaks or leakage cracks in accordance with Subsection 3.6.2.

The COL Applicant is to identify the types of as-built materials and material specification used for base metal welds, weldments, and safe ends for piping evaluated for LBB. Additionally, the COL Applicant is to provide information related to as-built material and material specifications for piping including toughness (J-R curves) and tensile strength (stress-strain curves), yield and ultimate strength, welding process/methods used, provide confirmation that the actual plant-specific stress analysis based on final as-built plant piping layout and material properties and welds satisfy the bounding LBB analysis, and provide confirmation that the final bounding LBB analysis addresses all plant-specific and generic degradation mechanisms in the as-built piping systems. This issue is to be resolved in ITAAC described in Table 2.3-2 of Tier 1 Chapter 2.3.

The loading condition of a pipe run or branch, prior to the postulated rupture, in terms of internal pressure, temperature, and inertial effects are used in the evaluation for postulated breaks. For piping pressurized during operation at power, the initial condition is the greater of the contained energy at hot standby or at 102% power.

3.6.3.1 Application of LBB Criteria

Piping systems to which LBB criteria are applied are high-energy systems with well defined loading combinations and conditions. LBB criteria are applied to the following high energy piping systems (see Appendix 3E).

- RCL Piping
- RCL branch piping with nominal diameter of 6 inches or larger, except for steam within the piping for the pressurizer safety valve and power operated relief valve
- Main Steam Pipe in PCCV

3.7.4.1 Comparison with Regulatory Guide 1.12

The proposed seismic instrumentation program is generally in accordance with RG 1.12 and RG 1.166 (References 3.7-40, 3.7-41), and consistent with the methodology used for seismic analysis that is discussed in Subsection 3.7.2. The seismic design of US-APWR standard plant is based on site-independent seismic response analysis of basemat resting on the surface of elastic half-space that is subjected to a control motion. The site independent OBE is defined as 1/3 of the CSDRS presented in Subsection 3.7.1.1. Verification of the site-independent standard design is performed during seismic analyses that consider site-specific conditions, such as soil layering, basemat embedment, water table depth etc. FIRS, which are developed from site-specific GMRS, define the site-specific control design motion.

The criteria that define the vibratory motion that requires the shutdown of the US-APWR plant ~~is~~ are based on the site-specific OBE. The 5% damping FIRS associated with the site-specific OBE must be enveloped by 1/3 of the 5% damping CSDRS. The conditions that require a shutdown of the US-APWR plant are defined by the OBE ISRS at the locations of seismic instrumentation. ~~Site-specific FIRS are developed at the locations of seismic instrumentation by performing site-specific seismic response analyses that use, as input, the site-specific OBE design motion.~~ Unless site-specific OBE is set at 1/3 of the site-specific SSE or lower, these spectra shall be obtained from SSI analysis using as input the site-specific OBE FIRS and properties of the supporting media that are strain-compatible to the site-specific OBE ground motion. When the site-specific OBE is equal or lower than 1/3 of site-specific SSC, the spectra scaled from the 5% damping site-specific SSC response spectra may be used directly for OBE exceedance checks. The measured response spectra at each of the instrumentation locations in Subsection 3.7.4.2 are compared against the corresponding site-specific OBE instructure acceleration and velocity response spectra in accordance with RG 1.166 (Reference 3.7-41). The comparison evaluation is to be performed within 4 hours of the earthquake using data obtained from the three components of the earthquake motion as defined by the three orthogonal axes of the standard plant (two horizontal and one vertical) on the uncorrected earthquake records. The evaluation is also to include a check on the operability of the seismic instrumentation as mandated by Section 4.3 of RG 1.166 (Reference 3.7-41).

The locations of seismic monitors for the US-APWR standard plant are provided in Subsection 3.7.4.2. The COL Applicant is to verify the site-specific applicability of these monitors, and determine if there is a need for the installation of additional instrumentation for the measurement of the free-field ground motion based on conditions and requirements specific to the site. The CAV is based on criteria for exceedance of OBE using measurements taken in the free-field, however the OBE exceedance can be evaluated by using only measurements from instrumentation installed on the buildings and the structures of the US-APWR standard plant. The seismic instrumentation for monitoring the free-field ground motion is not specifically required since both the site-independent and site-specific design are based on control motions that are defined at the bottom of the basemats. The response spectra of the free-field ground motion are not directly relevant to the design of the US-APWR standard plant nor are directly comparable to the design input ground motion as defined by the CSDRS and FIRS in Subsection 3.7.1.1.

The calculation of the CAV is performed in the manner provided in Electric Power Research Institute (EPRI) Report TR-100082 (Reference 3.7-42). As stated in RG 1.166 (Reference 3.7-41), the range of the spectral velocity limit should be 1.0 to 2.0 Hz which is different than that recommended by EPRI. In accordance with RG 1.166 (Reference 3.7-41), for each component of the free-field ground motion, the CAV should be calculated as follows: (1) the absolute acceleration (g units) time-history is divided into 1-second intervals, (2) each 1-second interval that has at least 1 exceedance of 0.025 g is integrated over time, (3) all the integrated values are summed together to arrive at the CAV. The approaches in EPRI Report NP-5930 (Reference 3.7-43) and EPRI Report TR-100082 (Reference 3.7-42) provide additional guidance on determining the CAV.

Acceleration and velocity spectra can be calculated from the measurement of free-field ground motion in order to set additional conditions for OBE exceedance in addition to the CAV check. ~~In accordance with RG 1.166 (Reference 3.7-41), t~~ The site-specific OBE is exceeded only if all of the following three conditions identified in RG 1.166 (Reference 3.7-41) are met:

1. Any of calculation of CAV described above yields a value that is greater than 0.16 g-second
2. 5% damping ARS generated by free-field ~~G~~ground motion ARS ~~is~~ are higher than 0.2 g at frequencies between 2 and 10 Hz, or higher than the site-specific OBE ARS between 2 and 10 Hz, whichever is greater
3. 5% damping velocity response spectra generated by free-field ~~G~~ground motion ~~velocity response spectra is~~ are higher than 6 in./sec at frequencies between 1 and 2 Hz, or higher than the site-specific OBE velocity response spectra between 1 and 2 Hz, whichever is greater

The shutdown of the plant is required only if all three of the above conditions are met and any of the 5% damping ARS obtained from the measurements of the instructure accelerations exceed the OBE spectra at the corresponding location. If the free-field ground motion is not measured, it is conservatively assumed that the checks of CAV and free-field ground accelerations and velocities are exceeded.

Additionally, low-level seismic effects would be included in the design of certain equipment potentially sensitive to a number of such events, based on a percentage of the responses calculated for the SSE.

3.7.4.2 Location and Description of Instrumentation

Consistent with the guidance of RG 1.12 (Reference 3.7-40), the seismic instrumentation for the US-APWR standard plant is solid-state multi-channel digital instrumentation with computerized recording and playback capability that allows the processing of data at the plant site within 4 hours of a seismic or other dynamic event.

The US-APWR triaxial time-history accelerograph consists of a centralized digital time history analyzer/recorder with multi-channel capability, which is located in a panel in a room adjacent to the plant MCR, and triaxial acceleration sensors that are provided at the following plant locations:

The locations listed above correlate to structural elements in the structures which have been modeled as mass points in the dynamic analysis so that the measured motion can be directly compared to the design spectra. The instrumentation mounted at the locations listed above is not mounted on equipment, piping, supports, or secondary structural frame members. These locations have been reviewed in accordance with RG 8.8 (Reference 3.7-44) and determined to be consistent with maintaining dose rates as low as practical and maintaining occupational radiation exposures as low as is reasonably achievable for access and maintenance of the instrumentation.

The COL Applicant is to assure that a time-history analyzer/recorder is provided which has the capability to provide pre-event recording time of 3 seconds minimum and post-event recording time of 5 seconds minimum, and to record at least 25 minutes of sensed motion. The recorder portion of the time-history analyzer is to have the capability of a sample rate of at least 200 samples per second in each of the three orthogonal directions of the plant, a bandwidth of 0.20 Hz to 100 Hz, and a dynamic range of 1,000:1 zero to peak. The triaxial acceleration sensors are to have the same dynamic range as the time-history analyzer recorder and a frequency range of 0.20 Hz to 100 Hz. The triggers of the tri-axial acceleration sensor units are to be capable of being set within the range of 0.001g to 0.02g. ~~Power supply for the seismic monitoring instrumentation system will normally be from the non-Class-1E direct current and uninterruptible power supply system, however, the system is to be equipped with dedicated back-up batteries and charger in case of power outage or power failure.~~ Batteries are provided with enough capacity for a minimum of 25 minutes of system operation at any time over a 24-hour period, without recharging, in combination with a battery charger whose line power is connected to an uninterruptible power supply.

The seismic instrumentation serves no safety-related function and, therefore, has no nuclear safety design requirements. However, its design and location are in accordance with RG 1.12 (Reference 3.7-40), which requires that the seismic instrumentation:

- will not be affected by the failure of adjacent SSCs during an earthquake;
- will operate during all modes of plant operation, including periods of plant shutdown; and
- is protected as much as practical against accidental impacts.

As required by RG 1.12 (Reference 3.7-40), the seismic instrumentation is rigidly mounted and oriented so that the horizontal components are parallel to the horizontal axes of the standard plant used in the seismic analyses. These features of the seismic monitoring instrumentation are obtained by qualifying the equipment to IEEE Std 344-1987 (Reference 3.7-25); the seismic qualification program is discussed in Section 3.10.

3.6.1.1 3.7.4.3 Control Room Operator Notification

The US-APWR standard plant is designed such that triggering of the instrumentation described above is annunciated in the MCR of the plant. For sites which will have more than one US-APWR unit, only one unit is required to have seismic instrumentation, provided that the anticipated seismic response at each of the units is considered essentially the same and provided that annunciation is provided at all unit MCRs. The COL Applicant is to determine from the site-specific geological and seismological conditions if multiple US-APWR units at a site will have essentially the same seismic

oriented in a radial pattern originating at the dome apex. The dome rib plates are stiffened with 5 in. by 3 in. by 1/4 in. angles running horizontally in the hoop direction, spaced approximately at 34 in. maximum. Where acceptable based on the results of the liner anchorage stress and strain design analyses (discussed in Subsection 3.8.1.4), the liner anchors are connected to the liner using discontinuous welds such as stitched fillet welds.

Figure 3.8.1-1 provides the overall dimensions of PCCV and Figure 3.8.1-5 provides GA of prestressing tendons and conventional reinforcement of the PCCV shell. Figure 3.8.1-3 and 4 also show the liner anchorage system arrangement.

3.8.1.1.1 Equipment Hatch

Figure 3.8.1-6 provides the equipment hatch general layout. The hatch is located at centerline elevation 86 ft, 3 in., azimuth 40 degrees, and is a 27 ft, 11 in. diameter spherical dish with a convex profile projecting into the PCCV volume. The containment internal pressure places the hatch head into compression against a double-sealed seat on the frame. The space between the two seals is capable of pressure testing for leakage across either seal.

A lifting rig with an electrically powered hoist is provided to disengage, transport, and store the hatch in a secure position next to the opening during outages. When required to seal the opening, the hatch is transported back by hoist, repositioned, refastened, and pressure tested for leaks.

3.8.1.1.2 Personnel Airlocks

Figure 3.8.1-7 provides the general layout for the two personnel airlocks. The lower airlock at centerline elevation 28 ft, 10 in. is located at azimuth 24 degrees, and upper airlock at centerline elevation 80 ft, 2 in. is located at azimuth 120 degrees. The airlock inside diameter is 8 ft, 6-3/8 in.

3.8.1.1.3 Mechanical Penetrations

Several typical PCCV penetrations are shown in Figure 3.8.1-8.

Figure 3.8.1-8, Sheet 12, shows typical details for the main steam penetrations. An anchor flange disc is embedded along the outer surface of the PCCV wall, with 12 triangular gussets at equal spacing connecting the flange disc and a 60 in. Outside Diameter (OD) cylindrical pipe sleeve, which is capped with a flexible boot outside the PCCV. A similar gusset configuration exists at the PCCV inner wall surface connecting the pipe sleeve to the thickened steel liner. ~~The sleeve extends approximately 3 ft, 9-1/4 in. inside containment for Loops A and D, and 4 ft, 3-1/4 in. for Loops B and C as measured along the sleeve centerline, and is closed off by a thickened end cap with a concentric opening for the passage of the steam line.~~ The sleeve extends inside containment and is welded to the flued head. The distance from the inner surface of the containment to the flued head is 3 ft, 9-1/4 in. for Loops A and D, and 4 ft, 3-1/4 in. for Loops B and C. The 32 in. OD main steam pipe passes through the sleeve opening~~, and a thickened pipe wall is welded to the end cap, but allowed to expand outside the PCCV~~.

Figure 3.8.1-8, Sheet 13, shows typical details for the startup feedwater penetration. An anchor flange disc is embedded along the outer surface of the PCCV wall, with eight triangular gussets at equal spacing connecting the flange disc and 30 in. OD cylindrical pipe sleeve which is capped with a flexible boot outside the PCCV. A similar gusset configuration exists at the PCCV inner surface connecting the pipe sleeve to the thickened steel liner. ~~The sleeve extends approximately 3 ft, 7-1/4 in. inside containment for Loops A and D, and 3 ft, 9-1/4 in. for Loops B and C as measured along the sleeve centerline, and is closed off by a thickened end cap with a concentric opening for the passage of the steam line.~~ The sleeve extends inside containment and is welded to the flued head. The distance from the inner surface of the containment to the flued head is 3 ft, 7-1/4 in. for Loops A and D, and 3 ft, 9-1/4 in. for Loops B and C. The 16 in. OD feedwater supply pipe passes through the sleeve opening~~, and a thickened pipe wall is welded to the end cap, but allowed to expand outside the PCCV~~. The 4 in. SG blowdown pipe (Figure 3.8.1-8 Sheet 14) passes through a 14 in. OD pipe sleeve that is anchored in the PCCV wall with four rectangular gussets embedded approximately midway in the wall. ~~The pipe sleeve extends approximately 1 ft, 10-5/8 in. into containment for all four loops, where the pipe and sleeve end cap are welded together.~~ The sleeve extends inside containment and is welded to the flued head. The distance from the inner surface of the containment to the flued head is 1 ft, 10-5/8 in. for all loops. The SG blowdown pipe sleeve is capped with a flexible boot outside the PCCV.

The fuel transfer tube penetrates the PCCV wall near azimuth 0 degrees, connecting the fuel handling canal in the R/B with the refueling canal in the interior of the PCCV. The fuel transfer tube penetration is sealed with the PCCV wall similar to other mechanical penetrations. The containment boundary is a double-gasketed blind flange at the refueling canal end. The expansion bellows are independent of the containment boundary; however, they maintain water seals by accommodating differential movement of the structures.

In accordance with the Section C.IV.1 “Combined License Application Acceptance Review Checklist” of RG 1.206 (Reference 3.8-1), the US-APWR PCCV is also equipped with dedicated PCCV penetrations, equivalent in size to a single 3 ft diameter opening, in order not to preclude future installation of systems to prevent containment failure, such as a filtered vented containment system.

Figure 3.8.1-8, Sheets 1 through 10, ~~and~~ 15, and 17 show other typical mechanical penetration details. Figure 3.8.1-8, Sheet 16, provides the penetration detail of the refueling canal.

3.8.1.1.3.1 Electrical Penetrations

Figure 3.8.1-8, Sheet 11, shows a typical electrical penetration detail.

3.8.1.1.3.2 Prestressing Configuration

Horizontal hoop tendons are used in the cylinder and the lower part of the dome. The horizontal tendons wrap around the entire circumference, and are anchored at two vertical buttresses 180 degrees apart. The anchors for the horizontal tendons are staggered such that adjacent tendons are anchored on opposite buttresses. The horizontal tendons anchored at the two vertical buttresses are accessed for servicing through vertical chases provided in the R/B at each buttress.

All other floors (ground floor and elevated floors)	200 lb/ft^2

In design reconciliation analysis if actual loads are established to be lower than the above loads, the actual loads may be used for reconciliation. Floor live loads for design are not reduced below 100 lb/ft^2, except for offices which are maintained as 50 lb/ft^2 minimum.

2.0.1.1.1.1 Roof Snow Loads

The roof is designed for uniform snow live load as specified in Chapter 2. ~~The snow load is not additive with other roof live loads, except as noted in Subsection 3.8.4.3 below. Roof snow loads are calculated in accordance with ASCE 7-05 (Reference 3.8-35), accounting for snow drift where appropriate. The importance factor is taken as 1.2 for category I and II SSCs (essential facilities). Roof snow load is considered as live load for seismic analysis, as defined in Subsection 3.8.4.3.~~ Normal winter precipitation roof loads are added to all other live loads that may be expected to be present at the time to determine the design live load on the roof, and include appropriate load factors in applicable loading combinations. The extreme winter precipitation roof load is included as live load in extreme loading combinations using the applicable load factor. Other extreme environmental loads, e.g., seismic and tornado loads are not considered as occurring simultaneously. Slope roof snow loads, partially loaded, unbalanced roof snow loads, and drifts (including sliding snow) on lower roofs, as applicable, are determined in accordance with ASCE 7-05 (Reference 3.8-35).

2.0.1.1.1.2 Roof Rain Loads

Roof rain load is accounted for in accordance with Chapter 8 of ASCE 7-05 (Reference 3.8-35), and applied as applicable in load combinations. Roof rain load is included in live load in applicable load combinations, including additive effects with roof snow load as identified in Section 7.10 of ASCE 7-05. Subsection 3.4.1.2 provides additional discussion of design features to limit ponding of rain on the roofs of plant buildings.

2.0.1.1.1.3 Concentrated Loads for the Design of Local Members

Concentrated load on beams and girders (in load combinations that do not include seismic load)	5,000 lbs to be applied as to maximize moment or shear. This load is not carried to columns. It is not applied in office or access control areas [(1)]
Concentrated load on slabs (to be considered with dead load only)	5,000 lbs to be so applied as to maximize moment or shear. This load is not cumulative and is not carried to columns. It is not applied in office or access control areas [(1)]

[(1)] Area where no heavy equipment is located or transported.

In the design reconciliation analysis, if actual loads are established to be lower than the above loads, the actual loads may be used for reconciliation.

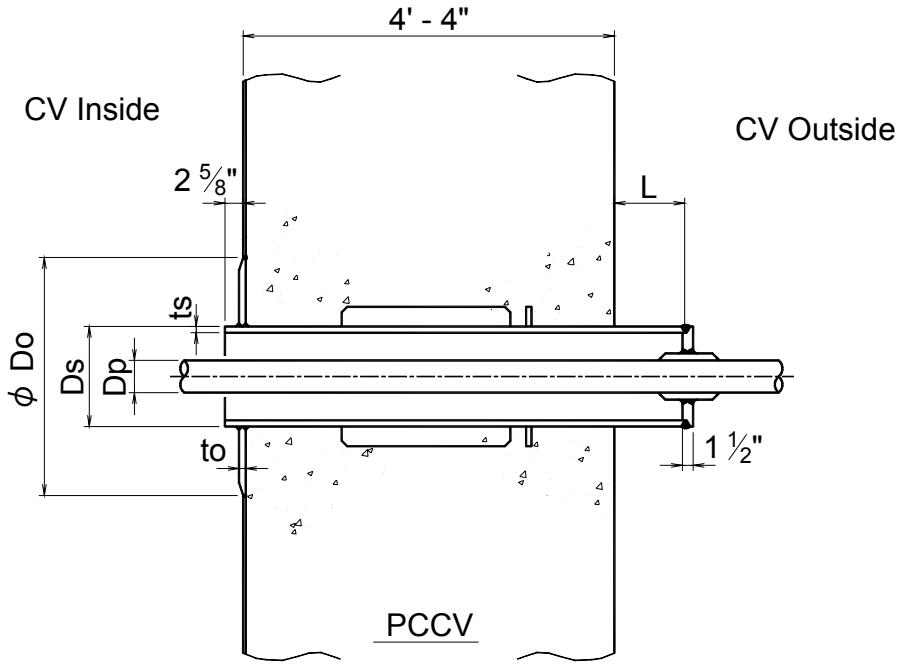

TYPE-1 (Pipe Size=follow 4B)

Ds	ts	Dp	L	Do	to	SLEEVE NO.
6B	1/2"	3/4B	7"	11 5/8"	1/2"	P220,P222,P231,P270,P416,P417
		1B	7"			P236,P247,P265,P266
		2B	7"			P207,P230,P245,P253,P284
10B	3/8"	3B	7"	1'-5 1/4"	1/2"	P205,P248,P260,P283
14B	5/8"	4B	7"	1'-8 3/4"	1/2"	P162,P210,P227,P233,P235,P258
						P274

Figure 3.8.1-8 Containment Penetrations
(Sheet 1 of ~~16~~ 17)

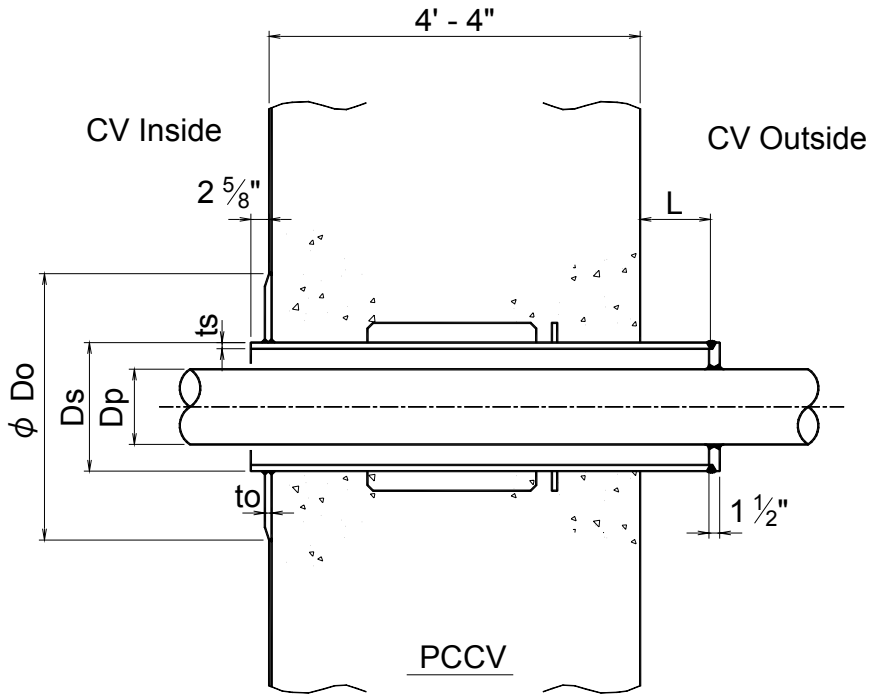

TYPE-2 (Pipe Size=above 6B)

Ds	ts	Dp	L	Do	to	SLEEVE NO.
14B	5/8"	6B	7"	1'-8 3/4"	1/2"	P161,P238
		8B	7"			P214,P224,P232,P234,P249,P250
						P251,P252,P261,P271,P401,P410
			23"			P212,P225,P259,P272
18B	1/2"	10B	7"	2'-1 3/8"	1/2"	P408,P409
			23"			P209,P226,P257,P273

Figure 3.8.1-8 Containment Penetrations
(Sheet 2 of ~~16~~ 17)

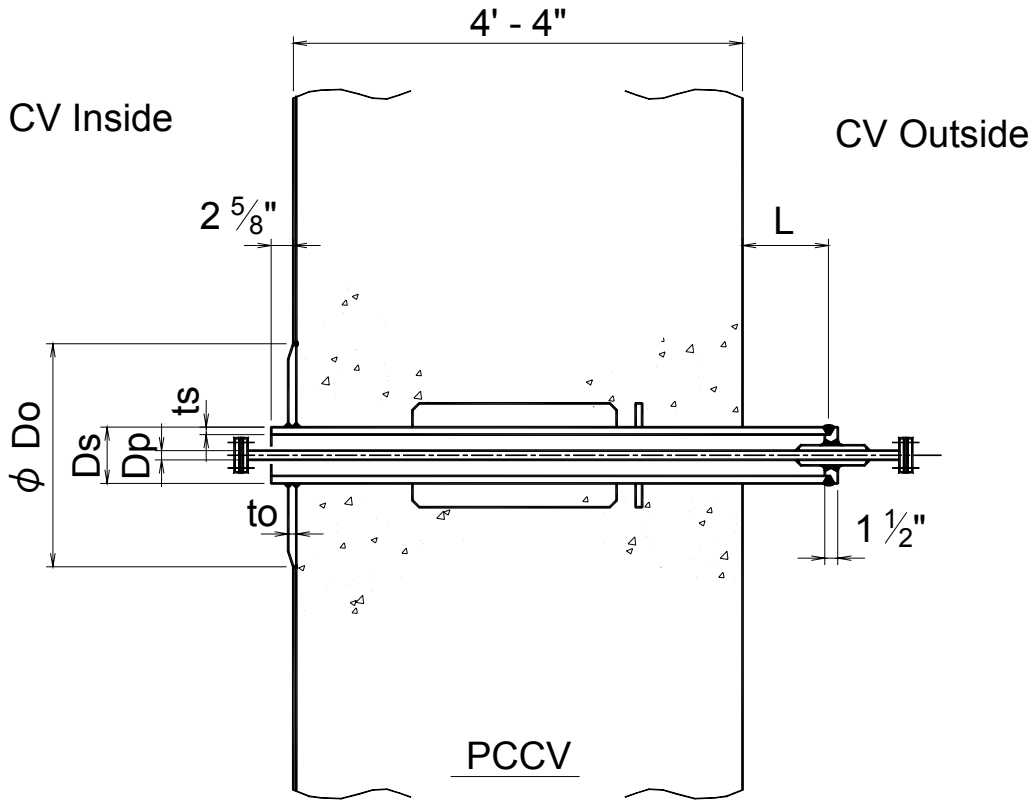

TYPE-3

Ds	ts	Dp	L	Do	to	SLEEVE NO.
6B	1/2"	3/4B	7"	11 5/8"	1/2"	P223

Figure 3.8.1-8 Containment Penetrations
(Sheet 3 of ~~16~~ 17)

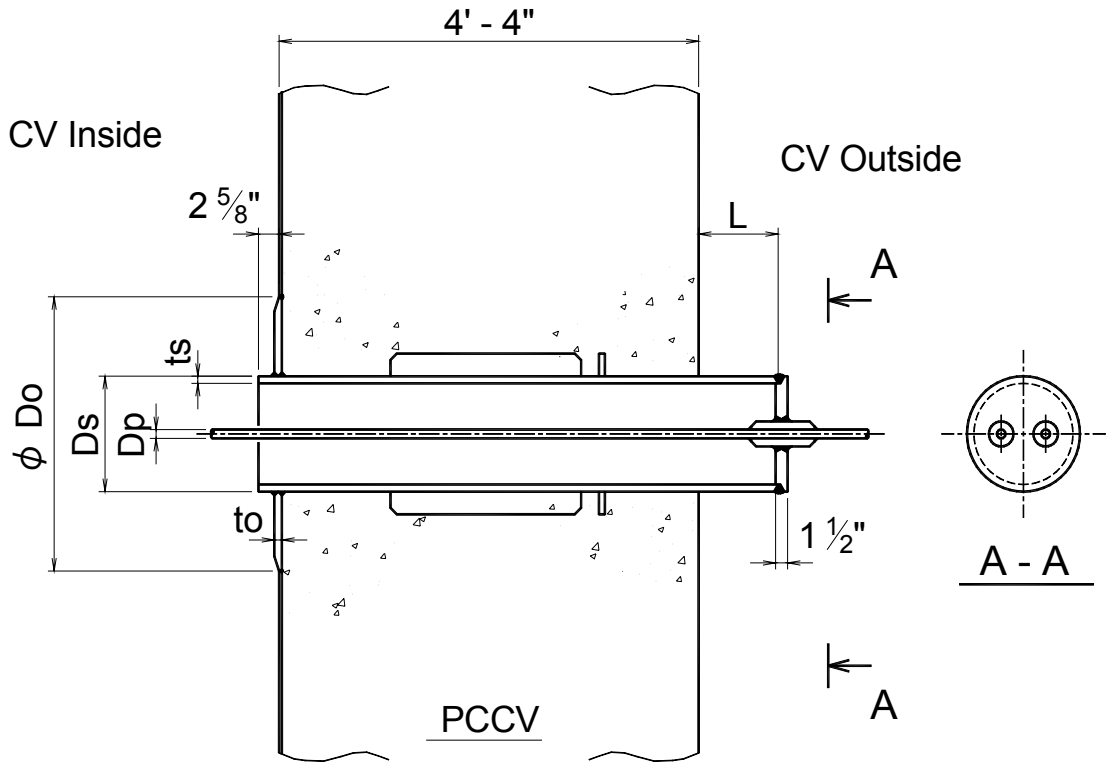

TYPE-4

Ds	ts	Dp	L	Do	to	SLEEVE NO.
14B	5/8"	3/4B	7"	1'-8 3/4"	1/2"	P262
			15"			P237,P239,P276
			23"			P267,P269

Figure 3.8.1-8 Containment Penetrations
(Sheet 4 of ~~16~~ 17)

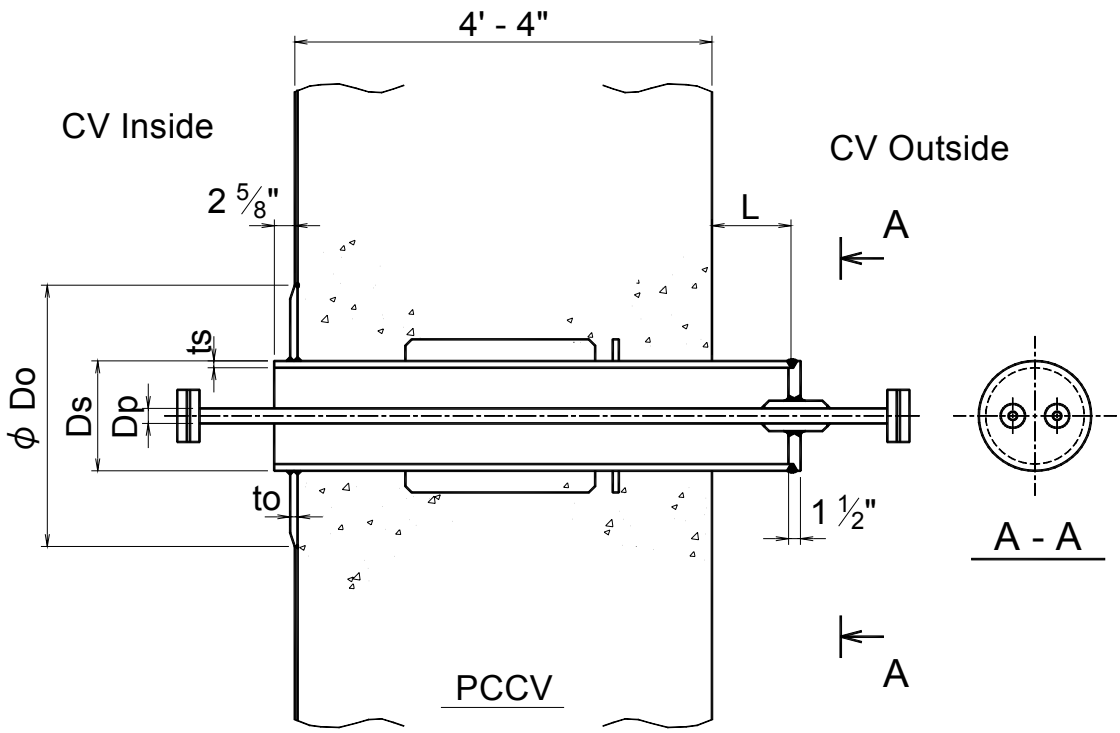

TYPE-5

Ds	ts	Dp	L	Do	to	SLEEVE NO.
14B	5/8"	3/4B	7"	1'-8 3/4"	1/2"	P405
		1-1/2B	7"			P418

Figure 3.8.1-8 Containment Penetrations
(Sheet 5 of ~~16~~ 17)

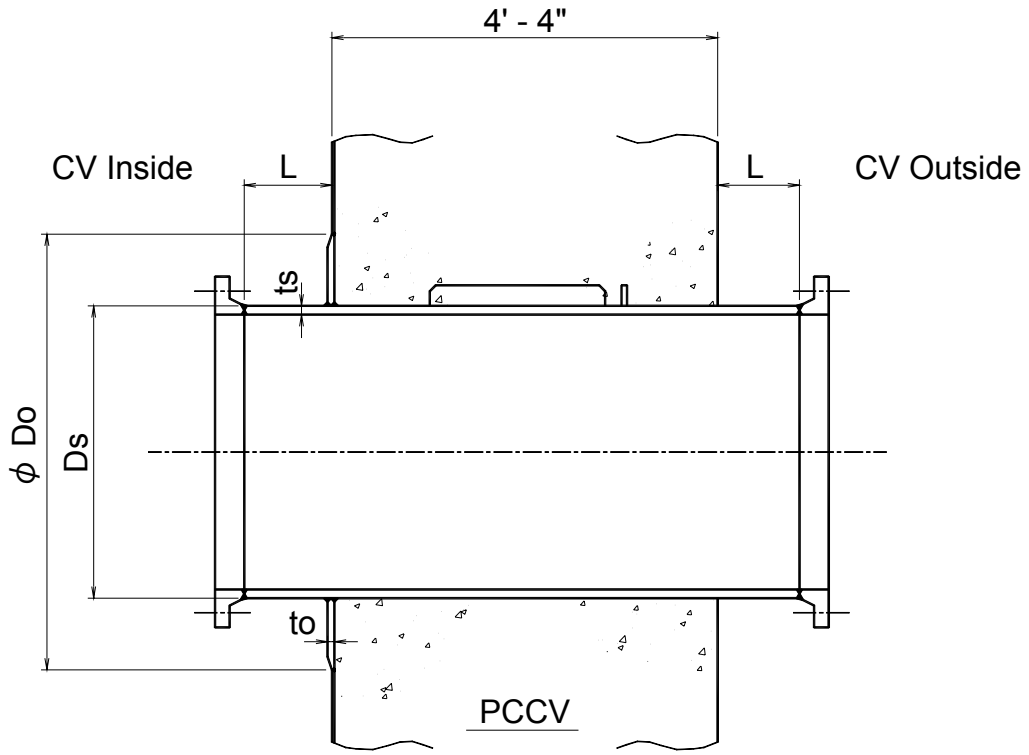

TYPE-8

Ds	ts	L	Do	to	SLEEVE NO.
36B	5/8"	15"	3'-7 3/8"	1/2"	P451,P452

Figure 3.8.1-8 Containment Penetrations
(Sheet 6 of ~~16~~ 17)

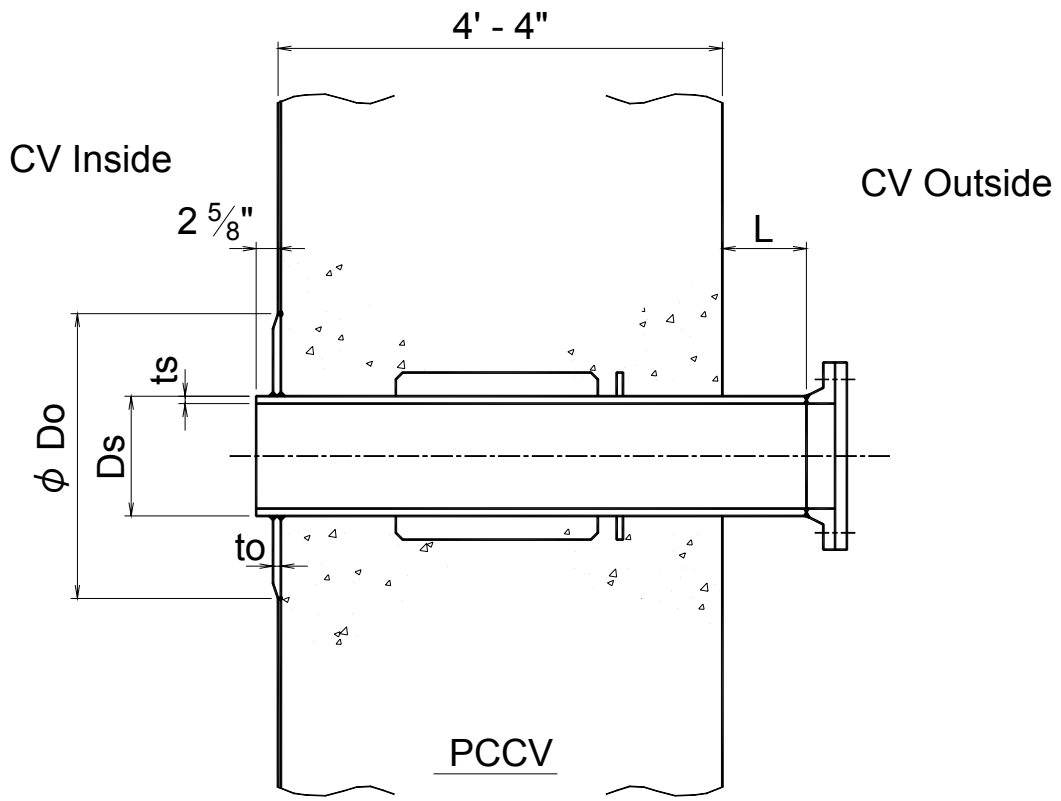

TYPE-9

Ds	ts	L	Do	to	SLEEVE NO.
6B	1/2"	7"	11 5/8"	1/2"	P301
12B	5/8"	7"	1'-7 1/4"	1/2"	P216,P218
14B	5/8"	7"	1'-8 3/4"	1/2"	P419,P420

Figure 3.8.1-8 Containment Penetrations
(Sheet 7 of ~~16~~ 17)

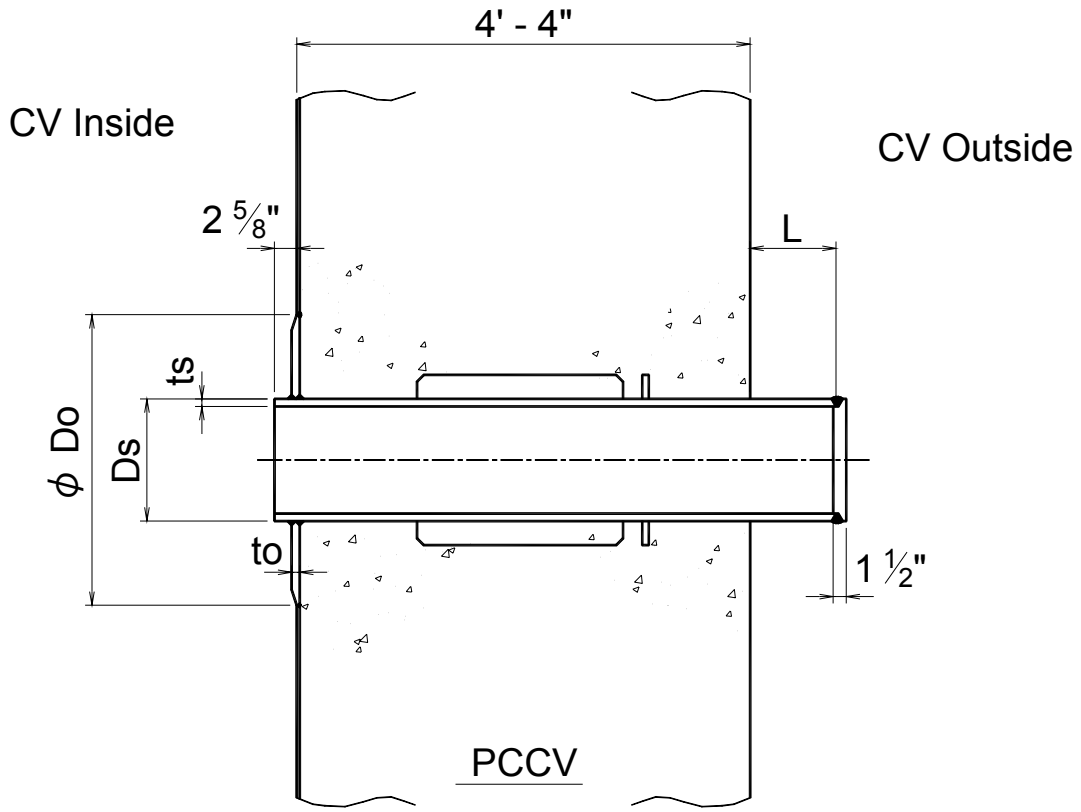

TYPE-10

Ds	ts	L	Do	to	SLEEVE NO.
14B	5/8"	24"	1'-8 3/4"	1/2"	P208,P213,P215,P246,P254,P268
					P275,P285,P406,P407

Figure 3.8.1-8 Containment Penetrations
(Sheet 8 of ~~16~~ 17)

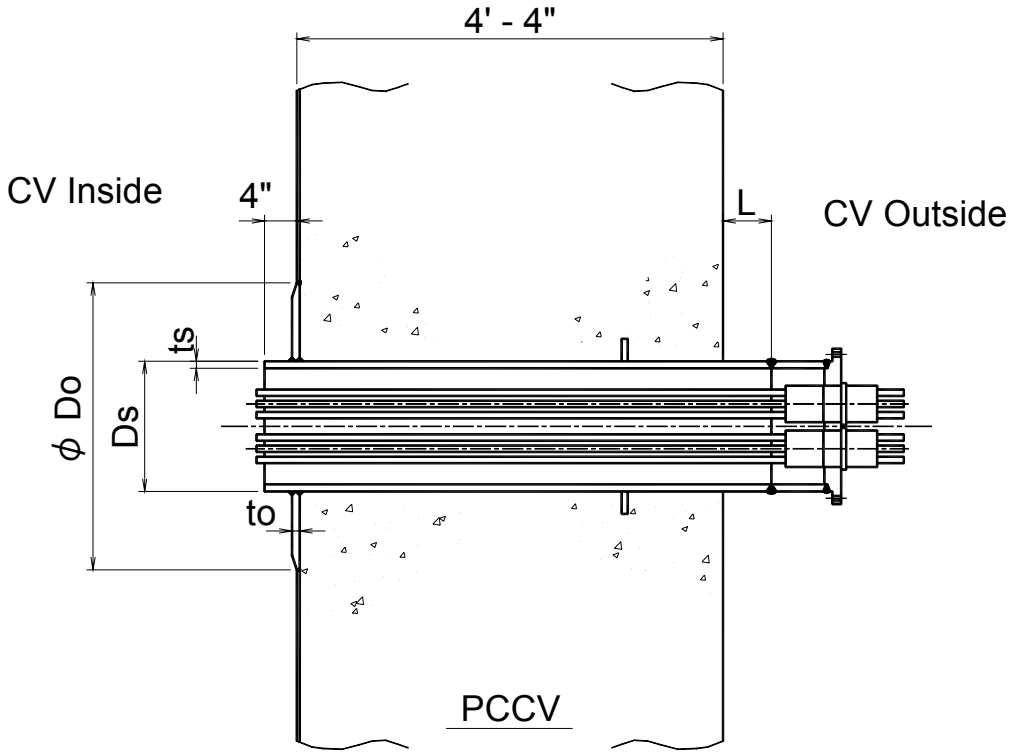

TYPE-11

Ds	ts	L	Do	to	SLEEVE NO.
12B	5/8"	6"	1'-7 1/4"	1/2"	E606,E607,E608,E609,E610,E612,E613,E615
					E616,E620,E621,E623,E624,E626,E627,E629
					E630,E632,E633,E635,E654,E655,E656,E657
					E663,E664,E665,E667,E703,E704,E710,E711
		8"			E701,E702,E709,E712
16B	3/4"	6"	1'-11 3/8"	1/2"	E602,E604,E611,E614,E617,E622,E625,E628
					E631,E636,E651,E661,E666,E668
		8"			E634,E637,E650,E653

Figure 3.8.1-8 Containment Penetrations
(Sheet 9 of ~~16~~ 17)

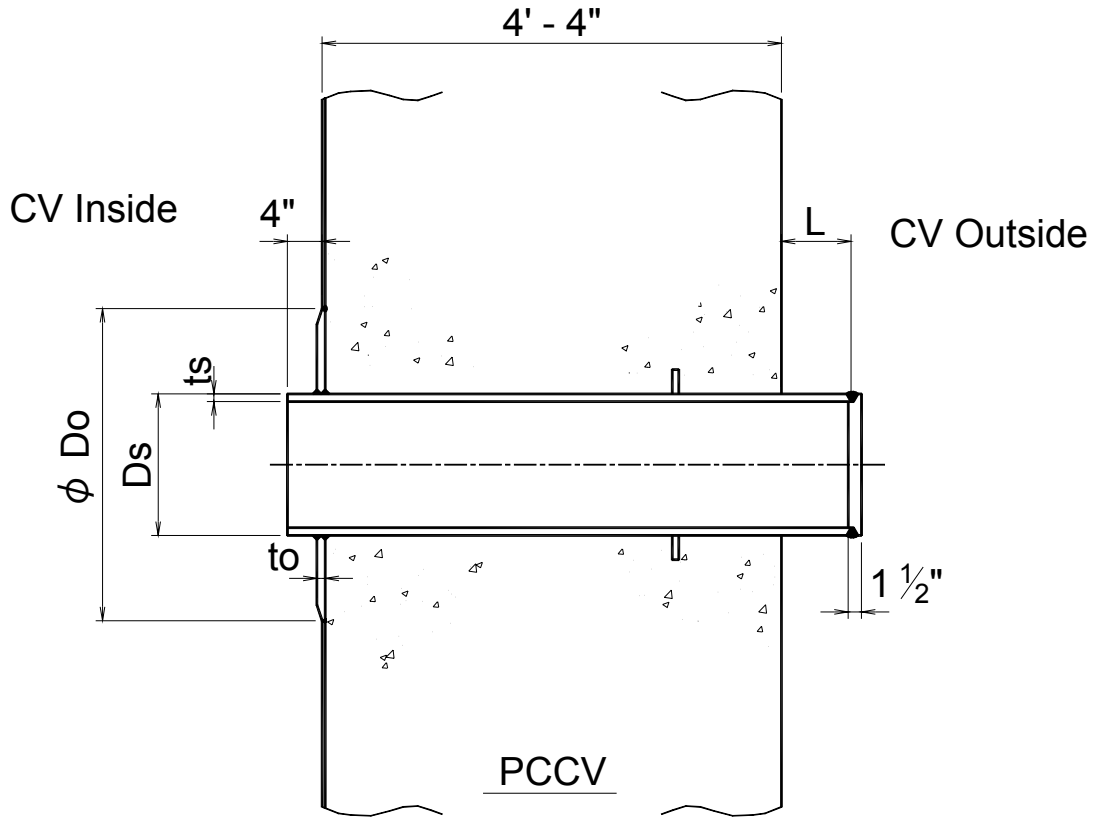

TYPE-12

Ds	ts	L	Do	to	SLEEVE NO.
12B	5/8"	6"	1'-7 1/4"	1/2"	E603,E605,E639,E652
		8"			E662
16B	3/4"	6"	1'-11 3/8"	1/2"	E601,E638,E658

Figure 3.8.1-8 Containment Penetrations
(Sheet 10 of ~~16~~ 17)

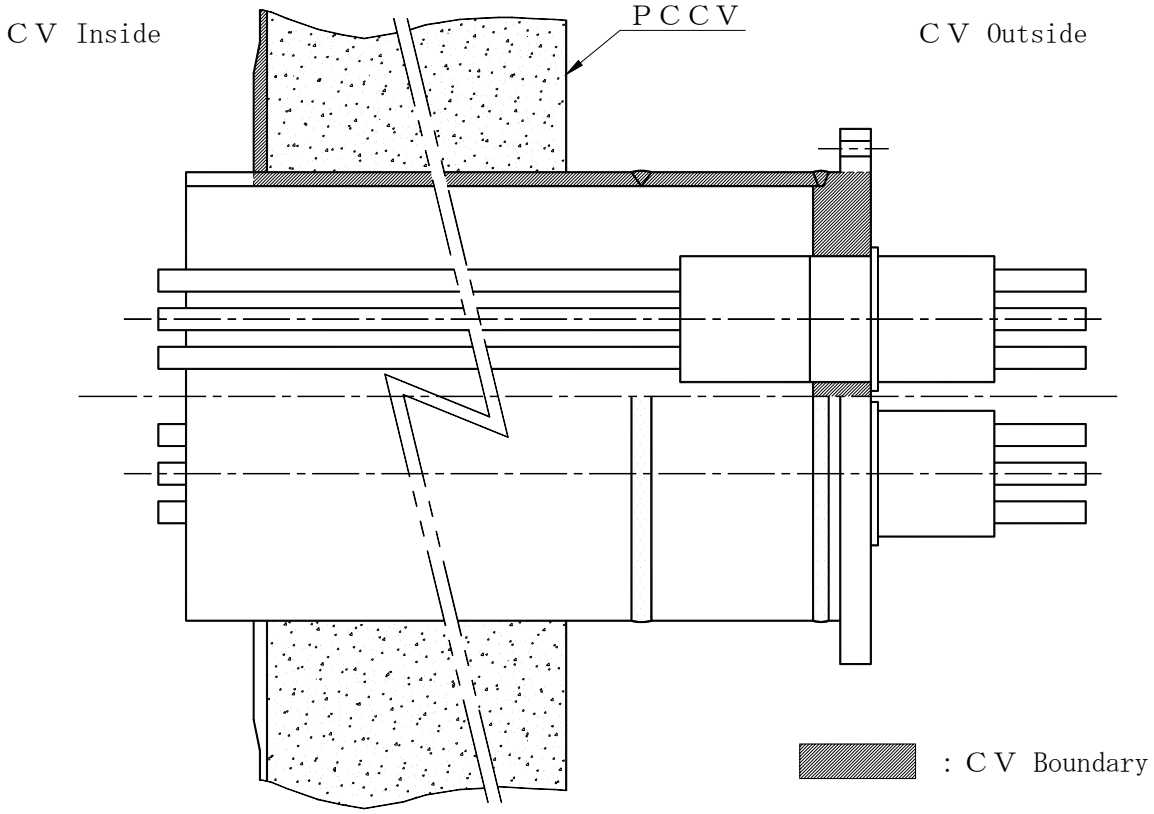

Typical Electrical Penetration Detail

Figure 3.8.1-8 Containment Penetrations
(Sheet 11 of ~~16~~ 17)

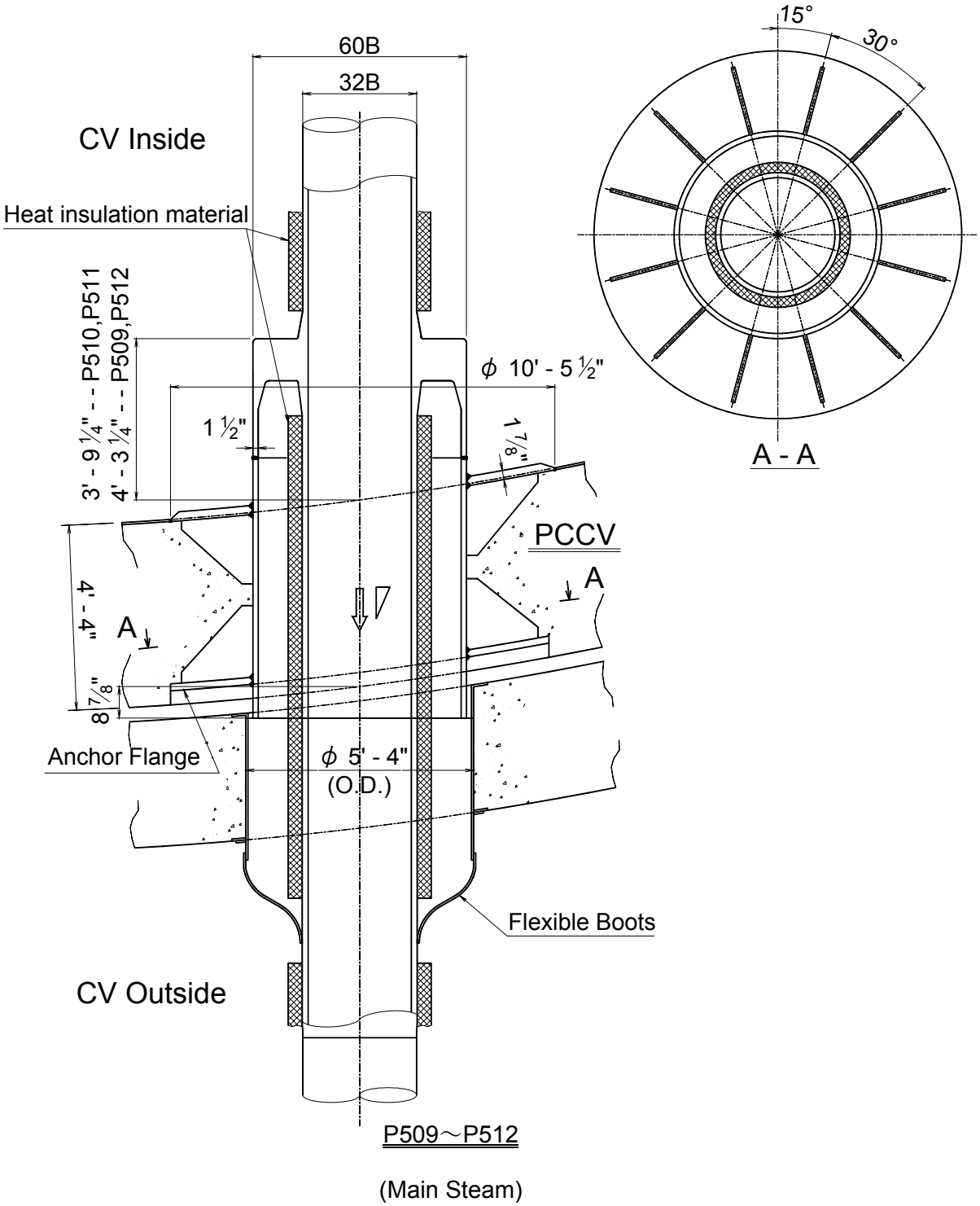

Figure 3.8.1-8 Containment Penetrations
(Sheet 12 of ~~16~~ 17)

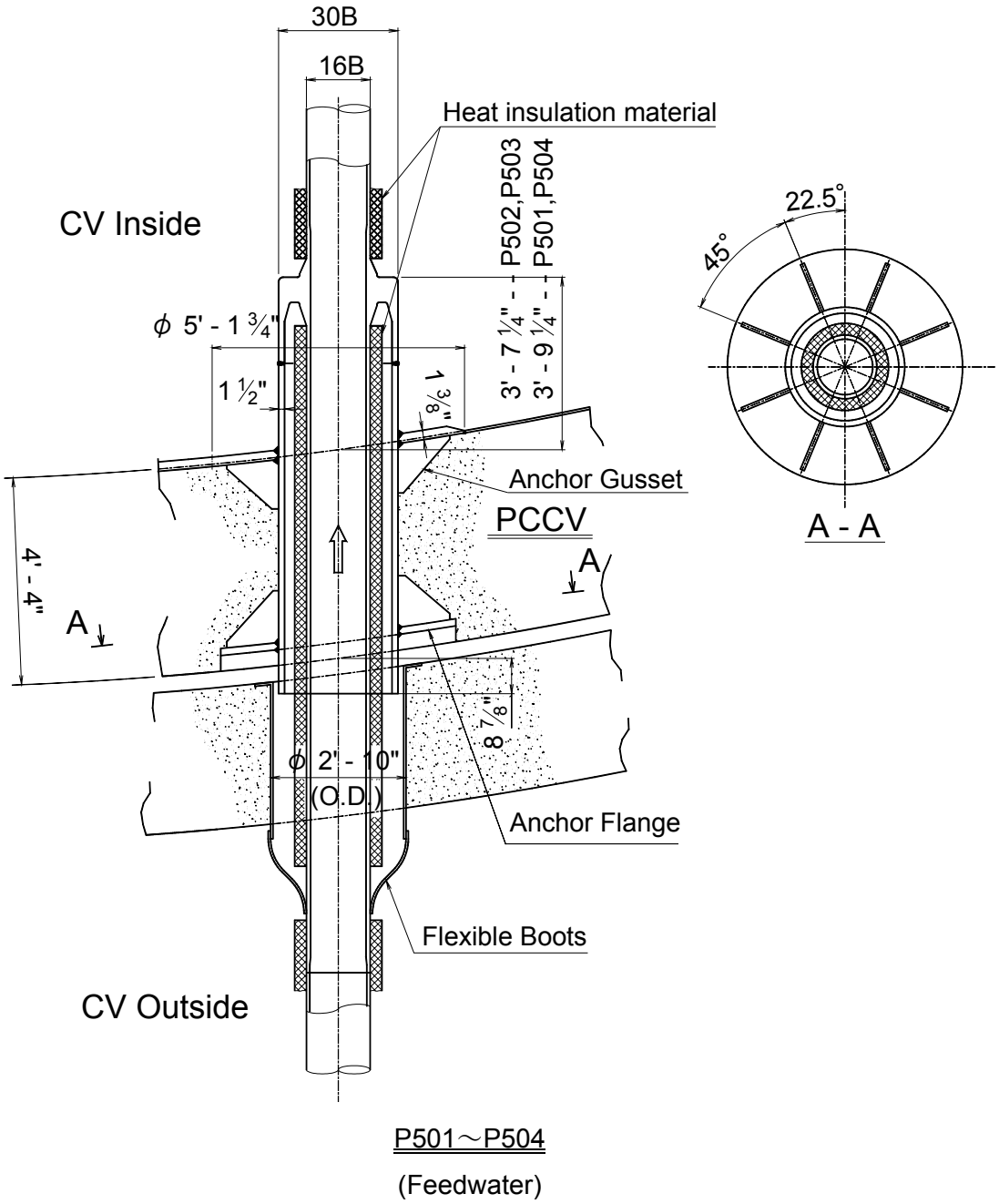

Figure 3.8.1-8 Containment Penetrations
(Sheet 13 of ~~16~~ 17)

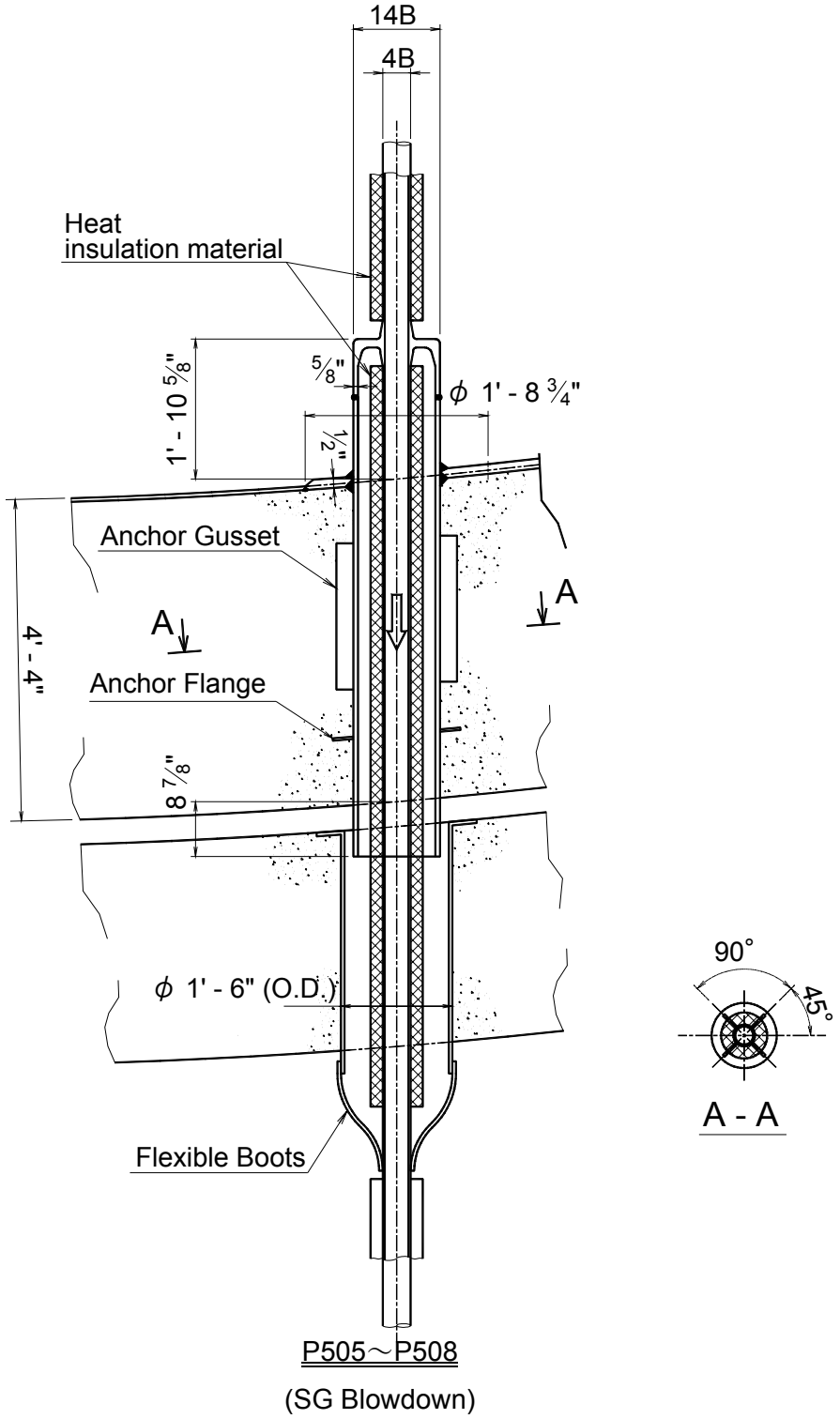

Figure 3.8.1-8 Containment Penetrations
(Sheet 14 of ~~16~~ 17)

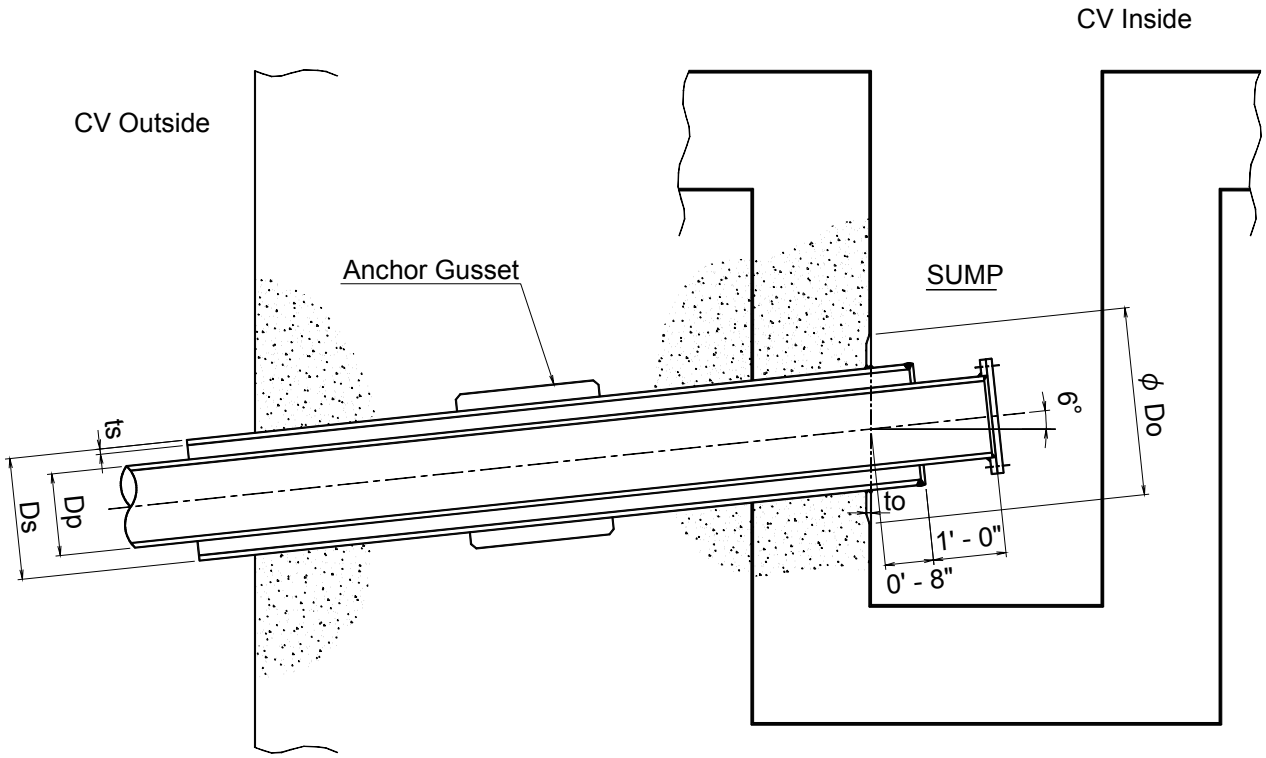

P151～P158

Ds	ts	Dp	Do	to	SLEEVE NO.
18B	1/2"	10B	2'-1 3/8"	1/2"	P152,P153,P156,P157
22B	1/2"	14B	2'-5 3/8"	1/2"	P151,P154,P155,P158

Figure 3.8.1-8 Containment Penetrations
(Sheet 15 of ~~16~~ 17)

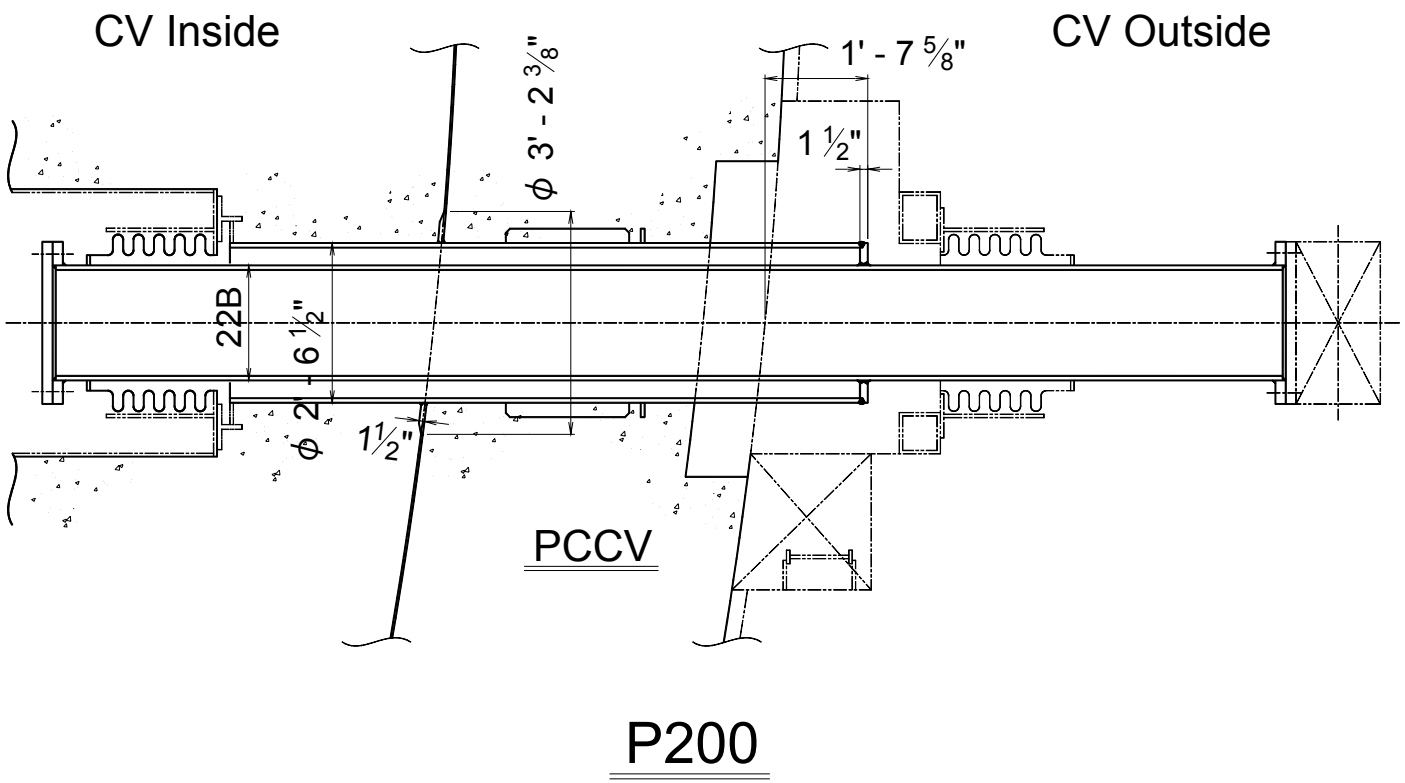

Figure 3.8.1-8 Containment Penetrations
(Sheet 16 of ~~16~~ 17)

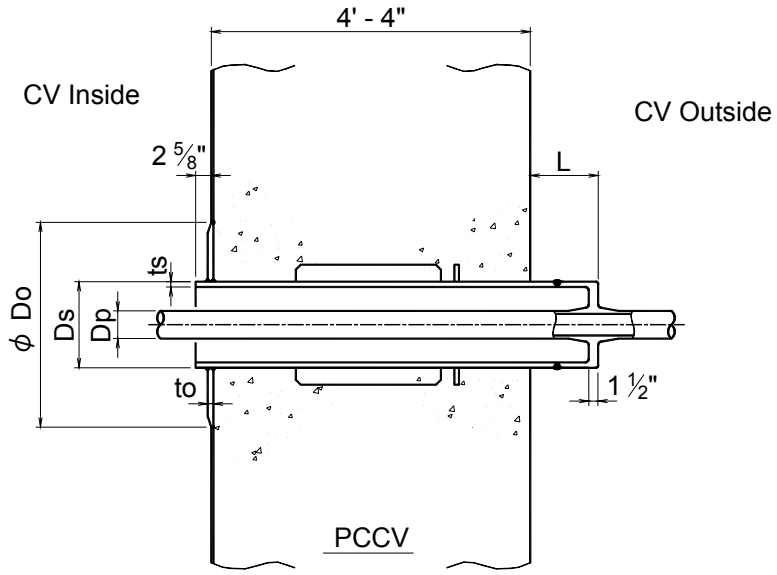

TYPE-13 (Pipe Size=follow 4B)

Ds	ts	Dp	L	Do	to	SLEEVE NO.
6B	1/2"	1-1/2B	7"	11 5/8"	1/2"	P279,P280,P281,P282
14B	5/8"	4B	7"	1'-8 3/4"	1/2"	P278
			15"			P277

Figure 3.8.1-8 Containment Penetrations (Sheet 17 of 17)

loadings and free motion during thermal movements of snubbers that support plant components. The ASME Code, Section III, Subsection NF (Reference 3.9.1) is used as a basis for structural design of snubbers.

Important considerations in snubber design involve the following considerations:

1. ASME level A, B, C, and D service loads are applied and structural capacity checks are compared to the manufacturer's design and/or test structural capacities associated with these ASME levels.
2. The snubber manufacturer supplies stiffness values for the model snubber, however stiffness consideration is taken for the effect of snubber end hardware configurations and attached supplementary steel supports. The combined effect is evaluated and a representative piping stress analysis model stiffness is derived.
3. The as-built snubber orientation is examined to determine if snubber binding could occur during component thermal motion and if the snubber is aligned outside of its manufacturer's recommended settings.
4. When multiple snubbers are used at a component location, an evaluation is performed at each application location to determine the effect of as-built misalignment. This multiple snubber misalignment requires a mechanistic evaluation of stiffness and load proportioning to each snubber.
5. For large bore snubbers of greater than 50 kip capacity, the recommended snubber design and test recommendations provided in NUREG/CR-5416 (Reference 3.9-46) are followed.
6. Specific environmental design considerations and snubber functionality is assured under harsh service conditions. See Subsection 3.9.3.4.2.5.

Important considerations in a snubber test program include but are not limited to the following:

1. Snubber cold position to hot position thermal movement is determined as part of the piping stress analysis and verified visually during initial plant operation. If plant-verified thermal movements are determined outside of the analytical design range, an evaluation of thermal movement acceptability is performed and required adjustments are made to either the stress model or the snubber configuration.
2. Based on initial in-situ snubber ~~dynamic lock-up testing and~~ thermal motion testing, a comparison of test data and analytical data ~~(force and/or displacement time histories due to earthquakes and/or dynamic transients)~~ assures that the piping or component stress analysis model and as-built snubber configuration performs within the analytical boundaries. For hydraulic snubbers, tested control valve bleed rates are compared with predicted rates of thermal movement under thermal transient conditions. Appropriate control valve adjustments are made as required. Sample load testing beyond snubber manufacturer rated service loads is performed to assure snubber functional compliance.
3. In order to assure continual functional operation of snubbers associated with safety-related components, the licensee is required to develop an ASME Section

table or database of snubbers requiring inspection. This table or database includes detailed information for snubbers that are associated with a safety-related component or system. This information can include frequency of inspection, hot and cold movements, service life, vendor identification information, service and environmental conditions, ASME Code designation, location reference and installation drawing references and other necessary specific data.

3.9.3.4.2.8 Snubber Installation Requirements

A snubber installation specification with appropriate drawing references, and hot and cold settings listed, is developed. In addition, instructions for adjusting and maintaining snubber condition are provided.

3.9.3.4.2.9 Snubber Examination and Testing

Snubber IST Program requirements, which apply ~~P~~rior to and after plant operation, ~~snubbers~~ are ~~required by Technical Specifications to be examined and tested~~ in accordance with the ASME Code OM, Subsection ISTD (Reference 3.9-13). Program details are provided in Subsection 3.9.6.4. ~~The examination determines that appropriate snubber orientation and condition, cold settings, snubber reservoir fluid level and connections, and assures that snubbers are designed and installed in accordance with the manufacturer's recommendations.~~

3.9.3.4.3 Struts

Struts are pin-connected manufactured rigid passive axial supports with no active mechanism. Struts are used as rigid restraints at locations on piping and components where minor thermal motion occurs. The use of struts assists in stabilizing piping systems subject to the dynamic effects of earthquakes or dynamic transient events.

Supplementary Steel Supports

Supplementary steel supports are designed in accordance with the ASME Section III Subsection NF (Reference 3.9-1). These supports are fabricated from steel sections such as Steel tubing, wide flange sections, plate steel, and angle steel. These supports are usually welded in a permanent configuration and cannot easily be disassembled like manufacturer type supports that are pinned or bolted. Criteria specific to the design of supplementary pipe supports is contained in section 3.12. Two classes of supplementary steel supports are frame type supports and special engineered pipe supports as specified below.

3.9.3.4.4 Frame Type Pipe Supports

Frame type pipe supports are generally used in environmental conditions not suitable for manufactured supports that have mechanical pinned connections. Similar to struts, frame type supports are not used at locations where the restraint of thermal pipe movement is excessive.

The design loads on frame type pipe supports are in accordance with those defined in Section 3.12 for pipe supports. Hot or cold gaps are incorporated in the design. Friction between the pipe and frame support that occurs as a result of sliding, considers an

Snubbers are modeled as stiffness elements in the piping system seismic stress analysis. Under thermal growth conditions, there is little stiffness; however, under sudden dynamic motion the stiffness is large.

With the implementation of LBB criteria and the elimination of the analysis of dynamic effects of pipe breaks detailed in Subsection 3.6.3, the use of snubbers is minimized in LBB qualified piping systems.

Snubber operability determination is considered part of the ASME Code, Section XI (Reference 3.9-43) inspection program. The ASME OM Code (Reference 3.9-13) is used to develop the inservice testing plan.

3.9.4 Control Rod Drive Systems

3.9.4.1 Descriptive Information of CRDS

The control rod drive system (CRDS) provides one of the independent reactivity control systems, driving a rod control cluster assembly (RCCA) which consists of 24 rodlets and acts as a neutron absorber in the reactor core.

The CRDM inserts and withdraws the RCCA, thus, adjusting the core output. It is operated and controlled by the CRDM control system.

3.9.4.1.1 CRDM

The CRDM for the US-APWR is of the magnetically operated jacking type, which is based on the L-106A type CRDM which has been used in many operating plants in the United States and Japan. These design improvements do not affect operability.

The CRDM consists of a pressure housing, latch assembly, drive rod assembly, and coil stack assembly. The pressure housing involves the latch assembly and the drive rod assembly, and supports the coil stack assembly on the outside of the pressure housing.

The coil stacks are energized sequentially by electric power, which cause magnetic power in the latch assembly to move the latches. The latches hold and move the drive rod assembly which is connected with the RCCA. When de-energized, the coil stacks and the latches release the drive rod assembly. Then the RCCA is inserted within the core by gravity.

The position of the RCCA is measured by the rod position indicator assembly, which is mounted surrounding the rod travel housing. The rod position indicator assembly includes discrete coils which magnetically sense the ferromagnetic drive rod assembly when it moves through the coil centerline. This system is further described in Subsection 7.7.1.4.

A total of 69 CRDMs are mounted on top of the RV closure head and installed directly to the closure head in a vertical position.

Figure 3.9-3 show one CRDM unit that consists of four main assemblies as described below. The US-APWR CRDM design is improved in comparison to standard CRDM designs as follows.

3.9.4.2 Applicable CRDS Design Specifications

According to 10 CFR 50.55a (Reference 3.9-29) and GDC 1, 2, 4, 14, and 29 requirements, the CRDM is designed, fabricated, and tested in accordance with quality standards commensurate with the safety functions to be performed so as to assure an extremely high probability of accomplishing the safety functions in the event of AOOs, postulated accidents, and natural phenomena, such as earthquakes.

The CRDM materials are discussed in Subsection 4.5.1. The rod position indicator is discussed in Subsection 7.7.1.4.

3.9.4.2.1 CRDM Functional Requirements

The functional requirements of the CRDM are as follows:

- Step length: 0.625 inch per step
- Maximum speed: 72 steps per minute (45 inches per minute)
- Travel length: 165.472 inches (nominal full steps at cold condition)
- Design drive line load: 374.8 pounds
- Trip delay time: Less than or equal to 0.15 seconds

  This is the response time of the latch mechanism (i.e., between when the coil current is cut off and the rod drop begins).

- Design life: 60 years
- Rapid RCCA insertion: Coil current is cut off to initiate dropping the RCCA and the drive rod. The RCCA and the drive rod are inserted by gravity.
- Design temperature for pressure housing and internal parts: 650°F
- Operating temperature for pressure housing and internals parts: 617°F
- Design pressure inside of pressure housing: 2,500 psia
- Operating pressure inside of pressure housing: 2,250 psia
- Design endurance criterion of the latch mechanism is six million steps, accommodating a margin for 60 years of operation (e.g., maintain stepping function).

The rod drop time, from starting rod drop at full withdrawal position to reaching 85% insertion stroke into the core, is evaluated by analysis.

Discussion of the reactivity control function of the CRDS is described in Section 4.6 and Section 7.7.1.3.

3.9.4.2.2 Pressure Housing Requirements

The pressure housing consists of a rod travel housing and a latch housing; both are butt welded. The latch housing is butt welded to a penetration nozzle of the RV head. As stated in GDC 14, the butt welded design is known to have an extremely low probability of leakage.

The pressure housing is categorized as a Class 1 component in RG 1.26 (Reference 3.9-52), in that it constitutes a pressure boundary of the reactor primary coolant system. It is designed in accordance with requirements in 10 CFR 50.55a (Reference 3.9-29) and ASME Code, Section III (Reference 3.9-1), Subsection NB.

After the CRDMs are installed on the RV head, hydrostatic testing in accordance with ASME Code, Section III (Reference 3.9-1) is performed to verify the pressure boundary integrity. The material of the CRDM is described in Subsection 4.5.1.

3.9.4.2.3 Internal Component Requirements

The CRDM latch assemblies and the drive rod, (which connects with the RCCA), are classified as internal components.

~~The latch assembly is non-pressure boundary component and, therefore, not ASME Code, Section III (Reference 3.9-1) limited.~~ The ASME Code requirements do not apply to non-pressurized components such as latch mechanism, the drive rod and the coil assembly. These non-pressurized components are classified as non-safety components. This is based upon having a gravity drop for coil mechanism or electric failure. If the coil assembly or electric device of the CRDM fails, the control rods are dropped/inserted into the core by gravity and reduce the reactivity. If the drive rod fails, the control rods drop into the core and reduce the reactivity. Sticking and galling of the latch mechanism are safety-related. The design, fabrication, inspection, and testing of the safety-related latch mechanism comes under the quality assurance requirement regarding safety components in 10 CFR 50.55a (Reference 3.9-29).

The latch mechanism is designed to operate in the temperature range between ambient temperature and plant operating temperature.

The drive rod assembly connects with the RCCA and is driven by the latch mechanisms which are non-pressure boundary components and, therefore, not ASME Code, Section III (Reference 3.9-1) limited. Failure of the drive rod by fracture, thereby, disconnecting the RCCA, leads to RCCA drop, with the resulting decrease in core reactivity, thus, the drive rod is not safety-related.

3.9.4.2.4 Coil Stack Assembly Requirements

The coil stack assembly is installed outside of the latch housing and is comprised of coil housings, an electrical conduit and connector, and three coils, whose design, fabrication, inspection and testing are not governed by the ASME Code, Section III (Reference 3.9-1).

The coil assembly rests on the ledge outside of the latch housing without mechanical connecting devices or welding.

combinations prescribed by the code. The loading combination and stress limits are described in Subsection 3.9.3 and shown in Tables 3.9-9 and 3.9-10. This includes seismic loading. The allowable rod travel housing deflection during the seismic event is 1.18 inch, which will still allow the RCCA to be inserted into the core. This is quantified by analysis.

The clearances in the CRDM latch assembly, the latch arm, and the coil assembly are controlled to avoid a stuck rod condition. The thermal expansion of each part is evaluated to determine and ensure the clearances. This design is the same as L-106A, which reflects operationally-proven design and experience.

3.9.4.4 CRDS Operability Assurance Program

The functional performance of the CRDMs must be qualified both statically, as RCS pressure boundary components, and dynamically as functional mechanisms. To fulfill these requirements, performance assurance programs are provided.

The structural integrity as a RCS pressure boundary, is confirmed by stress analysis in accordance with ASME Code, Section III (Reference 3.9-1), Subsection NB. Also, a hydrostatic test, at ambient temperature, is performed in accordance with ASME Code, Section III (Reference 3.9-1), Subsection NB.

The capability of the CRDM functions, including withdrawal, insertion, and trip delay are confirmed by both lead unit tests and production unit tests to demonstrate that the design specification requirements are met prior to shipment. The lead unit testing is described as follows:

Lead unit test is performed on the first production unit of the applicable type of CRDM.

- Cold stepping test with full design drive line load and maximum stepping speed (72 steps per minute).

  Criteria: no miss-stepping

- Trip delay time test at cold condition.

  Criteria: less than 0.15 seconds from coil current cut-off to the start of drive rod drop. This delay time can be estimated from the moveable gripper latch opening time during the insertion mode in the stepping test.

- Hot stepping test, with full design drive line load at maximum stepping speed (72 steps per minute).

  Criteria: no miss-stepping

- Trip delay time test at hot condition.

  Criteria: less than 0.15 seconds which is estimated from the moveable gripper latch opening time during the insertion mode in the stepping test.

Production tests are performed on all units before shipment. Test details are as follows:

combinations prescribed by the code. The loading combination and stress limits are described in Subsection 3.9.3 and shown in Tables 3.9-9 and 3.9-10. This includes seismic loading. The allowable rod travel housing deflection during the seismic event is 1.18 inch, which will still allow the RCCA to be inserted into the core. This is quantified by analysis.

3.9.4.4 CRDS Operability Assurance Program

The functional performance of the CRDMs must be qualified both statically, as RCS pressure boundary components, and dynamically as functional mechanisms. To fulfill these requirements, performance assurance programs are provided.

The structural integrity as a RCS pressure boundary, is confirmed by stress analysis in accordance with ASME Code, Section III (Reference 3.9-1), Subsection NB. Also, a hydrostatic test, at ambient temperature, is performed in accordance with ASME Code, Section III (Reference 3.9-1), Subsection NB. Stress analysis results are provided in Reference 3.9-59.

The capability of the CRDM functions, including withdrawal, insertion, and trip delay are confirmed by both lead unit tests and production unit tests to demonstrate that the design specification requirements are met prior to shipment. The lead unit testing is described as follows:

Lead unit test is performed on the first production unit of the applicable type of CRDM.

- Cold stepping test with full design drive line load and maximum stepping speed (72 steps per minute).

  Criteria: no miss-stepping

- Trip delay time test at cold condition.

  Criteria: less than 0.15 seconds from coil current cut-off to the start of drive rod drop. This delay time can be estimated from the moveable gripper latch opening time during the insertion mode in the stepping test.

- Hot stepping test, with full design drive line load at maximum stepping speed (72 steps per minute).

  Criteria: no miss-stepping

- Trip delay time test at hot condition.

  Criteria: less than 0.15 seconds which is estimated from the moveable gripper latch opening time during the insertion mode in the stepping test.

Production tests are performed on all units before shipment. Test details are as follows:

- Cold stepping test at full design drive line load at maximum stepping speed (72 steps per minute).

– Cold trip delay time test at cold condition

  Criteria: less than 0.15 seconds from the coil current cut-off to the start of the rod drop which can be estimated from the moveable gripper latch opening time during the insertion mode in the stepping test.

Preoperational Test

– The scram time, measured at 85% insertion stroke of the RCCA into the fuel assembly, is confirmed to be within specifications prior to initial start up of the plant and prior to start up after every refueling outage. Start up testing is described in Chapter 14.

Post-Refueling Startup Test

– The stepping and the drop tests are performed as in-service/post-refueling tests. The criteria of this test are applicable to all CRDMs as described in Subsection 14.2.

3.9.5 Reactor Pressure Vessel Internals

This section discusses the US-APWR reactor internals design arrangements; design basis loading for all service conditions; the acceptance criteria of stresses and functional requirements; the computational methods used in the static mechanical and thermal analyses, dynamic analyses, vibration analyses, and computational flow analyses; the testing and alternate methods to confirm computational inputs to the design, the interface load and displacement criteria of the reactor internals and interfacing components; and preservice and inservice inspection plans.

The term “reactor internals” used in this subsection refers to the core support and internal structures and to all structural and mechanical elements inside the RV with the following exceptions:

- Reactor fuel elements and the reactivity control elements out to the coupling interface with the drive unit, except for the structural and interfacing aspects of the reactor fuel assemblies with the reactor internals, which are within the scope of this subsection.
- Control rod drive elements except for the guide tubes, which are within the scope of this subsection.
- In-core and thermocouple instrumentation except for the in-core instrumentation supports and thermocouple support structures which are within the scope of this subsection.

3.9.5.1 Design Arrangements

The reactor internals for the US-APWR can be divided into two major assemblies, the upper reactor internals assembly, and the lower reactor internals assembly. A separate part that is captured between the upper and lower reactor assembly flanges and

3.9-10 NASTRAN, Femap with NX NASTRAN, Version 9.3.

3.9-11 Seepage Quantification of Upset in Reactor Tubes [SQUIRT], Code System to Predict Leakage Rate and Area of Crack Opening for Cracked Pipe in Nuclear Power Plants, Version 1.1, Oak Ridge National Laboratory (PSR-533), Oak Ridge, TN, 2003.

3.9-12 Initial Test Programs for Water-Cooled Nuclear Power Plant. Regulatory Guide 1.68, Rev. 3, U.S. Nuclear Regulatory Commission, Washington, DC, March 2007.

3.9-13 ~~Requirements for Preoperational and Initial Startup Vibration Testing of Nuclear Power Plant Piping Systems.~~ Code ~~of~~ for Operation and Maintenance of Nuclear Power Plants~~. OM~~, American Society of Mechanical Engineers (ASME OM Code), 1995 Edition through 2003 Addenda.

3.9-14 Code for Pressure Piping, Power Piping. ANSI B31.1, 2004 Edition, American Society of Mechanical Engineers.

3.9-15 IEEE Recommended Practice for Seismic Qualification of Class 1E Equipment for Nuclear Power Generating Stations, Institute of Electrical and Electronics Engineers, IEEE Std 344-1987.

3.9-16 Seismic Qualification of Electric and Mechanical Equipment for Nuclear Power Plants. Regulatory Guide 1.100, Rev.2, U.S. Nuclear Regulatory Commission, Washington, DC, June 1988.

3.9-17 Policy, Technical, and Licensing Issues Pertaining to Evolutionary and Advanced Light-Water Reactor (ALWR) Designs. SECY-93-087, April 2, 1993; SRM-93-087 issued on July 21, 1993.

3.9-18 Combining Modal Responses and Spatial Components in Seismic Response Analysis. Regulatory Guide 1.92, Rev.2, U.S. Nuclear Regulatory Commission, Washington, DC, July 2006.

3.9-19 Combining Modal Responses and Spatial Components in Seismic Response Analysis. Regulatory Guide 1.92, Rev.1, U.S. Nuclear Regulatory Commission, Washington, DC, February 1976.

3.9-20 Damping Values for Seismic Design of Nuclear Power Plants. Regulatory Guide 1.61, Rev.1, U.S. Nuclear Regulatory Commission, Washington, DC, March 2007.

3.9-21 Preoperational Vibration Assessment Program for Reactor Internals During Preoperational and Initial Startup Testing. Regulatory Guide 1.20, Rev.3, U.S. Nuclear Regulatory Commission, Washington, DC, March 2007.

3.9-22 Comprehensive Vibration Assessment Program for US-APWR Reactor Internals. MUAP-07027, Mitsubishi Heavy Industries, December 2007.

3.9-23 Au Yang, M.K. and Connelly, W.H. A Computerized Method for Flow-Induced Random Vibration Analysis of Nuclear Reactor Internals. Nuclear Engineering and Design 42, 1977, pp 277-263.

3.9-24 Test Report of APWR 1/5th Scale Model Flow Test. MUAP-07023, Mitsubishi Heavy Industries, December 2007.

3.9-25 Dynamic Testing and Analysis of Systems, Structures, and Components, Standard Review Plan for the Review of Safety Analysis Reports for Nuclear

3.9-10 NASTRAN, Femap with NX NASTRAN, Version 9.3.

3.9-11 Seepage Quantification of Upset in Reactor Tubes [SQUIRT], Code System to Predict Leakage Rate and Area of Crack Opening for Cracked Pipe in Nuclear Power Plants, Version 1.1, Oak Ridge National Laboratory (PSR-533), Oak Ridge, TN, 2003.

3.9-12 Initial Test Programs for Water-Cooled Nuclear Power Plant. Regulatory Guide 1.68, Rev. 3, U.S. Nuclear Regulatory Commission, Washington, DC, March 2007.

3.9-13 ~~Requirements for Preoperational and Initial Startup Vibration Testing of Nuclear Power Plant Piping Systems.~~ Code ~~of~~ for Operation and Maintenance of Nuclear Power Plants~~. OM~~, American Society of Mechanical Engineers (ASME OM Code), 1995 Edition through 2003 Addenda.

3.9-14 Code for Pressure Piping, Power Piping. ANSI B31.1, 2004 Edition, American Society of Mechanical Engineers.

3.9-15 IEEE Recommended Practice for Seismic Qualification of Class 1E Equipment for Nuclear Power Generating Stations, Institute of Electrical and Electronics Engineers, IEEE Std 344-1987.

3.9-16 Seismic Qualification of Electric and Mechanical Equipment for Nuclear Power Plants. Regulatory Guide 1.100, Rev.2, U.S. Nuclear Regulatory Commission, Washington, DC, June 1988.

3.9-17 Policy, Technical, and Licensing Issues Pertaining to Evolutionary and Advanced Light-Water Reactor (ALWR) Designs. SECY-93-087, April 2, 1993; SRM-93-087 issued on July 21, 1993.

3.9-18 Combining Modal Responses and Spatial Components in Seismic Response Analysis. Regulatory Guide 1.92, Rev.2, U.S. Nuclear Regulatory Commission, Washington, DC, July 2006.

3.9-19 Combining Modal Responses and Spatial Components in Seismic Response Analysis. Regulatory Guide 1.92, Rev.1, U.S. Nuclear Regulatory Commission, Washington, DC, February 1976.

3.9-20 Damping Values for Seismic Design of Nuclear Power Plants. Regulatory Guide 1.61, Rev.1, U.S. Nuclear Regulatory Commission, Washington, DC, March 2007.

3.9-21 Preoperational Vibration Assessment Program for Reactor Internals During Preoperational and Initial Startup Testing. Regulatory Guide 1.20, Rev.3, U.S. Nuclear Regulatory Commission, Washington, DC, March 2007.

3.9-22 Comprehensive Vibration Assessment Program for US-APWR Reactor Internals. MUAP-07027, Mitsubishi Heavy Industries, December 2007.

3.9-23 Au Yang, M.K. and Connelly, W.H. A Computerized Method for Flow-Induced Random Vibration Analysis of Nuclear Reactor Internals. Nuclear Engineering and Design 42, 1977, pp 277-263.

3.9-24 Test Report of APWR 1/5th Scale Model Flow Test. MUAP-07023, Mitsubishi Heavy Industries, December 2007.

3.9-25 Dynamic Testing and Analysis of Systems, Structures, and Components, Standard Review Plan for the Review of Safety Analysis Reports for Nuclear

3C Reactor Coolant Loop Analysis Methods

3C.1 Introduction

This Appendix provides the analytical methods of the reactor coolant loop (RCL) piping and support system model.

The RCL dynamic analysis may be applied for both the coupled model that is combined with the RCL, reactor building (R/B), prestressed concrete containment vessel (PCCV), and containment internal structure, and the un-coupled model that consists of the RCL piping and support systems. The RCL properties of the both models are based on this Appendix.

The RCL dynamic analysis is performed using the time-history direct integration, the time-history modal, or response spectra methods based on the safe-shutdown earthquake (SSE) established as the certified seismic design response spectrum (CSDRS). The dynamic analysis of the coupled model can be applied using the time-history direct integration method. The resulting static and dynamic loads generated from the RCL piping and the component support models provide the end loads and displacements at the connecting components and support points for each loop analyzed.

RCL structural analysis is performed for the postulated pipe rupture cases considering the applicable LBB criteria. Analysis methods apply time history direct integration or equivalent static analysis. External loads of pipe rupture, thrust loads, jet impingement loads, and subcompartment pressure loads are appropriately considered. The enveloping load is conservatively applied as the design load of the component. The combination of loads for Class 1 components and supports is discussed in DCD Subsection 3.9.3.1.3. Refer also to Subsection 3.9.3.1 for additional discussion on the modeling of the RCL piping and support system.

3C.2 RCL Model Description

The analysis model consists of the RCL hot, cold, and cross-over loop piping, steam generator (SG), reactor coolant pump (RCP), reactor vessel (RV), and component supports, as applicable, for each loop. The RCL piping and support system is modeled as three-dimensional finite elements (FEs) representing the components, pipes, and supports as beam elements, masses, and springs with imposed boundary conditions. The RCL of the US–APWR has four loops, which are modeled as beginning and ending at the hot leg and cold leg RV nozzles. These combined system models include both the translational and rotational stiffness, mass characteristics of the RCL piping and components, and the stiffness of supports. The stiffnesses and mass effects of auxiliary line piping are considered when they affect the system.

3C.2.1 Modeling of Primary Components and Equipment

The SG, RCP, and RV are modeled using equivalent pipe and beam elements, and are represented by lumped masses in each loop analysis. The geometry of the component is used to determine the properties of the equivalent piping or beam elements connecting masses. Other properties applied to the equivalent piping or beam elements include the modulus of elasticity and coefficient of thermal expansion corresponding to each thermal condition.

Chapter 5

safety injection. The most limiting heat input transient is an inadvertent reactor coolant pump startup in a loop where the steam generator temperature is 50°F higher than the other temperatures in the loop. The range of RCS temperatures was 70°F to 350~~280~~°F with a corresponding range of steam generator temperatures from 120°F to 400~~330~~°F.

5.2.2.2.2.2 Administrative Controls

During plant operation the following precautions are observed:

- At least two RHR inlet lines from the reactor coolant loop are not isolated unless there is a steam bubble in the pressurizer. This precaution ensures that there are relief paths from the reactor coolant loop to a CS/RHR pump suction relief valve when the RCS is at low temperature and the pressurizer is water solid.

- Whenever the pressurizer is water solid and the reactor coolant pressure is being maintained by the low pressure letdown control valve, letdown should include flow from the operating RHR loop through the RHRS cleanup to the letdown heat exchanger valve.

- One RCP should normally be running anytime RCS temperature is changed by more than 10°F in 1 hour. Additionally, RCPs should not be started if SG secondary water temperature is greater than 50°F above the RCS temperature.

- During a typical plant cool down, operable steam generators are connected to the steam header to ensure a uniform cool down of the reactor coolant loops.

- To preclude inadvertent emergency core cooling system (ECCS) actuation during heat-up and cool-down, blocking of signals actuation logic by the low pressurizer pressure and low steam line pressure is required. During further cool-down, closure and power lockout of the accumulator isolation valves is performed at 1000 psig and power lockout to the two safety injection pumps is performed at approximately 350°F in the RCS.

- Periodic ECCS performance testing of the ECCS pumps is done only during normal power operation or at hot shutdown conditions. Testing at these conditions preclude any potential for a cold overpressurization transient.

  Should cold shutdown testing of the pumps be required, the test is done when the reactor vessel is open to atmosphere, again precluding overpressurization potential.

  If cold shutdown testing with the reactor vessel closed is necessary, the procedures require only one pump to be tested with the ECCS discharge valve closed isolating potential ECCS pump pressure and the RCS is aligned to the CS/RHR pump suction relief valves.

  The SI signal circuitry testing, if performed during cold shutdown, also requires RHRS alignment and safety injection pumps power lockout to preclude developing cold over-pressurization transients.

Chapter 7

- Provides plant management and technical support to plant operations personnel during emergency conditions
- Relieves the reactor operators of peripheral duties and communications not directly related to reactor system manipulations
- Prevents congestion in the MCR
- Performs EOF functions for alert emergency class, for site area emergency class, and for general emergency class until the EOF is functional

Adequate working space for the personnel assigned to the TSC at the maximum level of occupancy is approximately 75 sq ft/person. The TSC working space is sized for a minimum of 25 persons, including 20 persons designated by the licensee and five NRC personnel. The TSC arrangement drawing is shown in Figure 7.5-3. The size and layout of TSC gives necessary space to maintain and repair TSC equipment, and is sufficient for storage of plant records and historical data.

The TSC is the primary onsite communications center for the plant during an emergency. The TSC facility consists of PCMS operational VDUs (information only, no control) and the LDP, which receives plant information from the unit bus. The TSC also provides personal computers with interfaces to external information systems via the station bus. Refer to Section 7.9. PCMS equipment is redundant including its power supply. In addition, the TSC provides telephones and facsimiles machines, which utilize multiple methods of telecommunication, refer to Subsection 9.5.2.

The TSC is located in the access building. Its location is close to the MCR, which is located in the reactor building. The walking time from the TSC to the MCR does not exceed two minutes.

The TSC ventilation system includes high-efficiency particulate air (HEPA) and charcoal absorbers.

The HSI display design is the same as that of the MCR. TSC is discussed in details in Topical Report MUAP-07007 Section 4.2.

7.5.1.6.2 Emergency Operations Facilities

The EOF is a near site or on-site support facility for the management of overall licensee emergency response (including coordination with federal, state, and local officials), coordination of radiological and environmental assessments, and determination of recommended public protective actions.

The EOF has suitable technical data displays and plant records to assist in the diagnosis of plant conditions and to evaluate the potential or actual release of radioactive materials to the environment. A senior licensee official in the EOF will organize and manage licensee offsite resources to support the TSC and the control room operators.

The COL applicant is to provide a description of the site-specific EOF.

Chapter 8

breaker on the high voltage side of the MT and all incoming circuit breakers of the MV buses connected to the UAT power source; and all affected MV buses are automatically transferred to the RAT source. The MV Class 1E and non-Class 1E P buses are not affected since these are normally fed from the RATs. The UAT incoming breakers to these buses is locked out and blocked from closing.

Unit synchronization is normally through the GLBS. Synchrocheck relays are used to ensure proper synchronization of the unit to the offsite power system.

High voltage circuit breakers are sized and designed in accordance with IEEE Std C37.010 and C37.06 (Reference 8.2-14, 8.2-15). High voltage disconnecting switches are sized and designed in accordance with IEEE Std C37.32 (Reference 8.2-16).

The MTs, UATs and RATs have differential, over-current, sudden pressure and ground over-current protection schemes per IEEE Std 666 (Reference 8.2-9). The COL applicant is to provide site-specific protection scheme.

Isolated phase busduct provides the electrical interconnections between generator load terminals to the GLBS, the GLBS to the MT and the disconnect links on the high voltage side of the UATs, and the UAT disconnect links to the UATs. Non-segregated phase bus ducts/cable buses provide electrical connections between the low voltage side of the UATs and RATs to the 13.8 kV and 6.9 kV MV switchgear. The non-segregated phase bus ducts/cable buses from the UATs and RATs are physically separated to minimize the likelihood of simultaneous failure.

Each of the single phase transformers of the MT is provided with disconnect links so that a failed transformer may be taken out of service and the spare transformer can be connected. All UATs are also provided with disconnect links so that a failed transformer can be taken out of service. With one UAT or one RAT out of service, all MV buses will have access to at least one offsite power source.

The MT, UATs and RATs, are located respectively in area of MT and UATs and area of RAT separated by three-hour rated fire barriers, in the transformer yard adjacent to the turbine building (T/B). Cables associated with the normal preferred and alternate preferred circuits are physically separated from each other to minimize common cause failure, even supposing that these circuits share a common underground duct bank. In accordance with the guidance of Generic Letter 2007-01, for prevent the degradation of medium voltage cables that are installed in underground duct banks, the manholes are at the low point with the conduits in the connecting duct banks sloped for water drain into the manholes. The manholes are available for temporary sump pumps for water draining. The medium voltage cables whether in a duct bank or in a conduit are monitored by periodical testing, such as partial discharge testing, time domain reflectometry, dissipation factor testing, and very low frequency AC testing. These PPS circuits are also designed to minimize common cause failure with standby power sources.~~The MT, UATs and RATs, are all located in the transformer yard adjacent to the turbine building (T/B). Three-hour rated fire barriers are provided between the RAT and area of MT and UATs.~~ All of these transformers are provided with containment for collection of transformer oil in case of tank leakage or rupture.

~~Cables associated with the normal preferred, alternate preferred and onsite power system circuits are physically separated from each other to minimize common mode failure. These circuits may share a common underground duct bank.~~

8.2.1.2.1 Switchyard

The plant switchyard design is site-specific. The COL applicant is to provide at least two physically independent power circuits between the offsite grid systems and the plant's high voltage switchyard. The design of the interface is to be provided by the COL applicant. There are two physically independent transmission tie lines from the plant high voltage switchyard to the onsite transformer yard. These two power circuits are designed and located to minimize, to the extent practical, the likelihood of their simultaneous failure under operating condition and postulated accident conditions. Each power circuit has sufficient capacity and capability to assure satisfactory operation of all safety-related loads and non safety-related loads.

All relay systems used for protection of offsite power circuits and transformers are provided with primary and back-up protection. The COL applicant is to provide protection relaying of offsite power circuits.

8.2.2 Analysis

The preferred offsite power system is designed consistent with the following criteria, so far as they are applicable to non-Class 1E equipment and system. Any exceptions or clarifications to the applicable criteria are explained.

8.2.2.1 Applicable Criteria

- GDC 2, "Design Bases for Protection Against Natural Phenomena"

  Equipment and components of the offsite power system are non-Class 1E and are located outdoors except for the connections to Class 1E MV buses, which are located indoors. The effects of natural phenomena are considered in designing the offsite power system to withstand without loss of capability to perform their intended functions within the conditions as provided in Chapter 2 such as high and low atmospheric temperatures, high wind, rain, ice and snow, but it not specifically designed to withstand earthquakes, tornadoes or floods. Lightning protection of the offsite power system is described in conformance with RG 1.204 (Reference 8.3.1-16). The normal and alternate preferred offsite power circuits are physically separated and electrically isolated, so that failure of an active component in one circuit has no impact to the on the other circuit.

- GDC 4, "Environmental and Dynamic Effects Design Bases"

  All equipment and components of the offsite power system are designed to withstand the effects of, and are operable under the environmental conditions associated with normal conditions, maintenance, testing and postulated accidents; and are operations, appropriately protected against dynamic effects that may result from equipment failures, including missiles, pipe whipping and discharging fluids. Each transformer of the offsite power system is provided

- Standby power from Class 1E GTG and
- AAC power from non-Class 1E AAC GTG

Class 1E 6.9kV ac buses A, B, C and D are normally powered from the RAT during all modes of plant operation including normal and emergency shutdown, and accident conditions. Bus transfer schemes are provided to automatically restore power to the Class 1E buses from the alternate preferred offsite source, if available, or from the Class 1E GTG. Transfer back to RAT is by manual operation. The incoming circuit breakers to the Class 1E buses can be operated by the automatic bus transfer scheme or by manual control from the MCR or remote shutdown room. The AAC GTG incoming breaker in the Class 1E switchgear has only local manual control.

The logic diagrams for initiating closing and tripping of the incoming breakers to the Class 1E 6.9kV buses A, B, C and D are shown in Figure 8.3.1-2.

A. Automatic transfer of Class 1E buses from RAT to UAT initiated by RAT relay protection

Automatic fast transfer for Class 1E buses A, B, C and D, from RAT to UAT, is initiated by the RAT protective relays composed of main and backup differential relays. The fast bus transfer is accomplished under the following conditions:

- Main generator protection lockout relays A and B have not operated.
- Class 1E 6.9kV bus protection relay has not operated.
- The synchronizing check relay between UAT and RAT gives permissive for the transfer.
- The incoming circuit breaker from RAT is open.

The loads on the affected bus continue operation without interruption, if the fast bus transfer from RAT to UAT is successful. If the fast bus transfer is not successful, bus undervoltage signal initiates slow transfer as shown below:

- The bus undervoltage signal trips the incoming circuit breaker from RAT and starts the Class 1E GTG associated with the affected bus.
- Trip the motor loads on the affected bus.
- Close the incoming circuit breaker from the UAT after 1 second, if incoming circuit breaker from RAT is open and the 6.9kV bus protection relay has not operated. If the voltage to the affected Class 1E buses is restored from the alternate offsite power through UAT, loads on the affected buses are started by the LOOP load sequencer.
- If the voltage is not restored to the affected bus after closing the incoming circuit breaker from the UAT, the incoming circuit breaker from UAT is opened by the

8.3.1.1.2.6 Testing of AC Systems during Power Operation

All Class 1E circuit breakers and motor controllers are testable during reactor operation. During periodic testing of Class 1E system, subsystems of the engineered safety features actuation system, such as safety injection, containment spray, and containment isolation are actuated thereby causing appropriate circuit breaker or contactor operation. The 6.9kV and 480V switchgear circuit breakers and control circuits can also be tested independently while individual equipment is shutdown. These circuit breakers can be placed in test position and exercised without operation of the associated equipment. The use of jumpers or other temporary test arrangements which would bypass protective functions is not required to verify system capability to operate except during startup testing.

The testing of ac power systems is performed in accordance with IEEE Std 308, 338 and 603 (Reference 8.2-4, 8.3.1-29 and 8.3.1-4) as endorsed by RG 1.32, 1.118 and 1.153 (Reference 8.3.1-19, 8.3.1-24 and 8.3.1-5). Bypassed and inoperable status indication is provided based on RG 1.47 (Reference 8.3.1-23) as described in Section 7.5.1.2. Surveillance testing of Class 1E ac power systems is described in detail in Chapter 16.

8.3.1.1.2.7 Sharing of Systems and Equipment between Units

The US-APWR is a single unit design, so there is no sharing of safety-related systems or components between units.

8.3.1.1.2.8 Class 1E Electrical Equipment Qualification

The electrical equipment identified as safety-related is qualified as Class 1E and is designated as seismic category I. The Class 1E equipment and components are capable of withstanding the environmental conditions to which they are exposed. The Class 1E equipment qualification meets the requirements of IEEE Std 323 (Reference 8.3.1-6), IEEE Std 344 (Reference 8.3.1-12) and applicable equipment standards.

8.3.1.1.3 Class 1E Standby Power Sources

GTG is used as Class 1E standby power sources for the US-APWR. Design of the Class 1E standby power sources for US-APWR is based on the use of qualified GTG for Class 1E applications based on the advantages shown below:

- The GTG is more reliable and has fewer components and auxiliary systems than diesel generators.
- The GTGs do not have cooling water requirements.
- The GTGs need less space than diesel generators.
- The GTGs require less maintenance than diesel generator units.

Note

If a LOOP occurs during ECCS load sequencing or after ECCS load sequencing is completed, the ECCS load sequencing is reset and all motor loads are shed by the undervoltage signal.

If power to the bus is restored either from the UAT or Class 1E GTG after slow transfer, the ECCS load sequence is restarted. Loads operated for the LOCA sequence are shown in Figure 8.3.1-2.

8.3.1.1.3.7 Loss of Class 1E GTG

Should a Class 1E GTG fail due to a mechanical or electrical malfunction or is tripped by one of the trip signals, as shown in Subsection 8.3.1.1.3.3, the sequencer will shed all loads after the Class 1E GTG breaker has opened.

8.3.1.1.3.8 Testing

The following site tests are performed on the Class 1E GTG during the plant preoperational test program and during the plant operation. The test procedures include a final equipment check prior to starting the tests.

1. During the plant preoperational test programs only, 25 consecutive start tests for each Class 1E GTG are to be run with no failures, to demonstrate the required reliability.

2. During the plant operation, a single start test on 31day test intervals will be performed. The periodic testing of Class 1E GTG during the plant operation is intended to:

   a. Demonstrate that the Class 1E GTG starts and verify that the required voltage and frequency are attained.

   b. Demonstrate ~~maximum~~ expected load-carrying capability, with load equivalent to 90 – 100 % of the continuous rating of the Class 1E GTG, for an interval of not less than 1 hour. The maximum expected loading for Class 1E GTG is based on a LOCA concurrent with a LOOP.

      This test may be accomplished by synchronizing the Class 1E GTG with the offsite power system from either a RAT or the UAT, and loading at the maximum practical rate as recommended by manufacturer.

3. GTG failures will be addressed in accordance with plant procedures that implement the provisions of 10 CFR 50.65 (Reference 8.2-7).

4. The Technical Specifications will include requirements such that during the preoperational period and at least once every 24 months after the plant is in operation, tests are run during shutdown (except for tests described by items f, g, h, and k). The test procedures include a final equipment check prior to starting the tests. Tests described by items e, f, g and i may be performed during any mode of plant operation, as required.

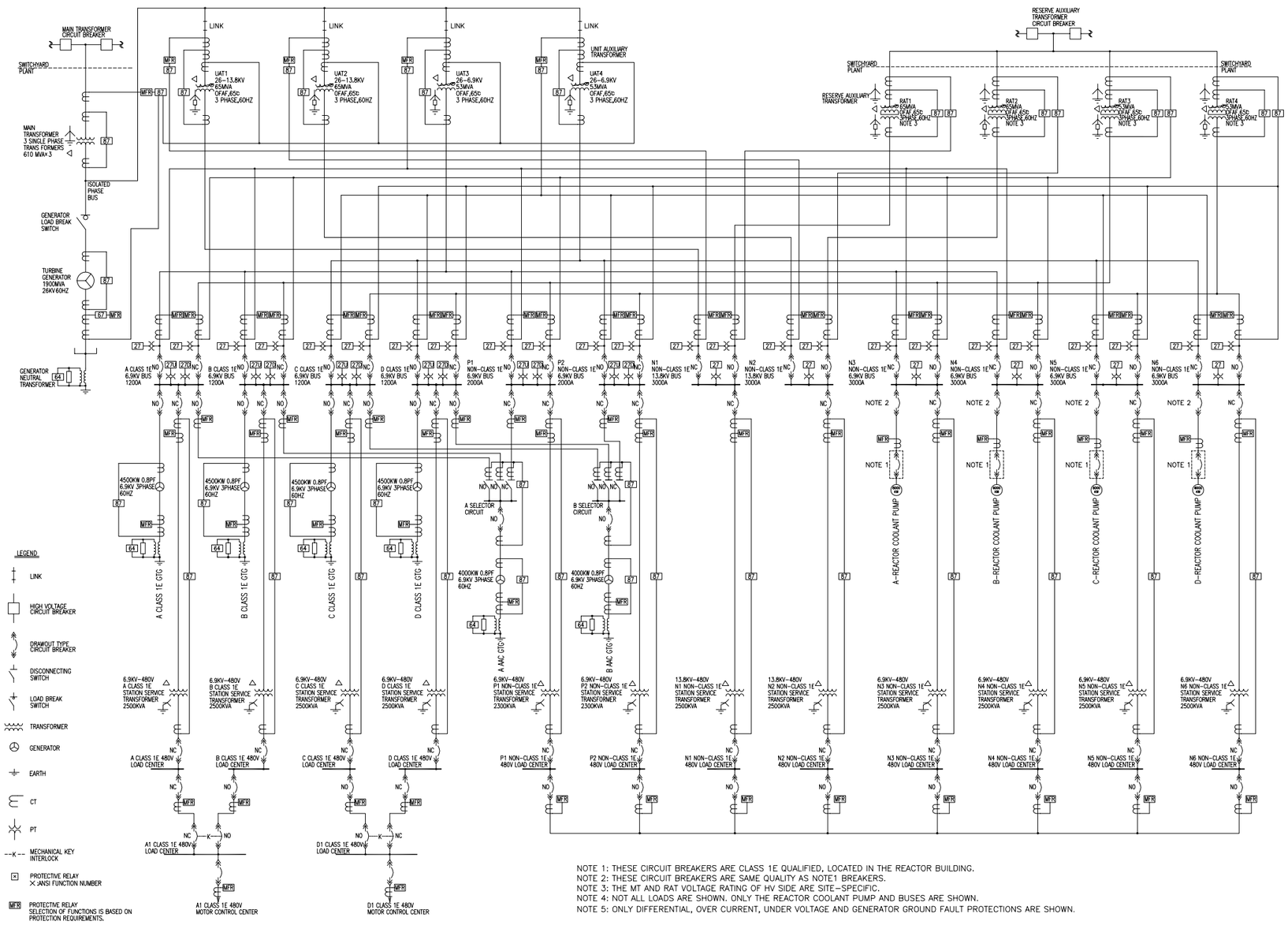

Figure 8.3.1-1 Onsite AC electrical distribution system (Sheet 1 of 7)

Main one line diagram

Chapter 12

12.1.2.3.2 Minimizing Radiation Levels in Plant Access Areas and Vicinity of Equipment

The general design considerations used in the design of the facilities to minimize radiation levels in plant access areas and near equipment requiring personnel attention include the following:

- Separating radiation sources and occupied areas where practicable (e.g., keeping pipes or ducts containing fluids with the potential for high radiation levels away from occupied areas)
- Providing adequate shielding between radiation sources and access and service areas
- Locating equipment, instruments, and sampling stations in the lowest practicable radiation zone
- Providing central control panels to remotely operate all essential instrumentation and controls in the lowest radiation zone practicable
- Where practicable, separating highly radioactive components from less radioactive components such as instruments and controls
- Providing means and adequate space for utilizing moveable shielding for sources within the service area when required
- Providing means to control contamination and to facilitate decontamination of potentially contaminated areas where practicable as required by 10 CFR 20.1406 (Reference 12.1-6)
- Providing means to decontaminate service areas
- Providing space for pumps and valves outside of highly radioactive areas
- Providing for remotely-operated filter exchange for radwaste and cleanup systems
- Providing labyrinth entrances to radioactive equipment and valve rooms
- Providing adequate space in labyrinth entrances for easy access
- Maintaining ventilation airflow patterns from areas of lower potential airborne radioactivity to areas of higher potential airborne radioactivity

12.1.3 Operational Considerations

The COL Applicant is to describe how the plant follows the guidance of RG 8.2 (Reference 12.1-7), 8.4 (Reference 12.1-8), 8.6 (Reference 12.1-9), 8.7 (Reference 12.1-10), 8.9 (Reference 12.1-11), 8.13 (Reference 12.1-12), 8.15 (Reference 12.1-13), ~~8.20 (Reference 12.1-14),~~ 8.25 (Reference 12.1-15), ~~8.26 (Reference 12.1-16),~~ 8.27 (Reference 12.1-17), 8.28 (Reference 12.1-18), 8.29 (Reference 12.1-19), ~~8.32 (Reference 12.1-20),~~ 8.34 (Reference 12.1-21), 8.35 (Reference 12.1-22), 8.36 (Reference 12.1-23), and 8.38 (Reference 12.1-24).

In addition, the COL Applicant is to provide the operational radiation protection program for ensuring that occupational radiation exposures are ALARA. This program is to be developed, implemented and maintained as described in the Nuclear Energy Institute Technical Report, NEI 07-03 (Reference 12.1-25), including compliance with the relevant quality assurance guidance provided in RG 1.33 (Reference 12.1-26). The specific CFR criteria referenced in NEI 07-03 shall be met and strictly adhered to. All recommendations and guidance referenced in NEI 07-03 are to be addressed and implemented as applicable to the US-APWR and the plant site.

Operational procedures will be developed, following the guidance of RG 4.21 (Reference 12.1-27), for the operation and handling of all structure, system, and components (SSC) which could be potential sources of contamination within the plant. These procedures will be developed according to the objective of limiting leakage and the spread of contamination within the plant. See Subsection 12.1.4 for COL information.

12.1.4 Combined License Information

COL 12.1 (1) The COL Applicant is to demonstrate that the policy considerations regarding plant operations are compliance with RG 1.8, 8.8 and 8.10 (Subsection 12.1.1.3).

COL 12.1 (2) Deleted.

COL 12.1 (3) The COL Applicant is to describe how the plant follows the guidance of RG 8.2, 8.4, 8.6, 8.7, 8.9, 8.13, 8.15, ~~8.20,~~ 8.25, ~~8.26,~~ 8.27, 8.28, 8.29, ~~8.32,~~ 8.34, 8.35, 8.36 and 8.38.

COL 12.1 (4) Deleted.

COL 12.1 (5) The COL Applicant is to provide the operational radiation protection program for ensuring that occupational radiation exposures are ALARA.

COL 12.1 (6) The COL applicant is to perform periodic review of operational practices to ensure configuration management, personnel training and qualification update, and procedure adherence.

COL 12.1 (7) The COL applicant is to track implementation of requirements for record retention according to 10CFR 50.75(g) and 10 CFR 70.25(g) as applicable.

12.1.5 References

12.1-1 "Standards for Protection Against Radiation," Energy. Title 10, Code of Federal Regulations, Part 20, U.S. Nuclear Regulatory Commission, Washington, DC, May 1991.

12.1-2 Generic FSAR Template Guidance for Ensuring That Occupational Radiation Exposures Are As Low As Is Reasonably Achievable (ALARA). NEI Technical Report 07-08, Revision 1, Feb. 2008.

12.1-3 Qualification and Training of Personnel for Nuclear Power Plants. RG 1.8, Rev. 3, U.S. Nuclear Regulatory Commission, Washington, DC, May 2000.

12.1-4 Information Relevant to Ensuring that Occupational Radiation Exposures at Nuclear Power Stations Will Be as Low as Is Reasonably Achievable. RG 8.8, Rev. 3, U.S. Nuclear Regulatory Commission, Washington, DC, June 1978.

12.1-5 Operating Philosophy for Maintaining Occupational Radiation Exposures as Low as Is Reasonably Achievable. RG 8.10, Rev. 1-R, U.S. Nuclear Regulatory Commission, Washington, DC, May 1977.

12.1-6 "Minimization of Contamination." Energy. Title 10 Code of Federal Regulations, Part 20.1406, U.S. Nuclear Regulatory Commission, Washington, DC.

12.1-7 Guide for Administrative Practices in Radiation Monitoring. RG 8.2, Rev.0, U.S. Nuclear Regulatory Commission, Washington, DC, February 1973.

12.1-8 Direct-Reading and Indirect-Reading Pocket Dosimeters. RG 8.4, Rev.0, U.S. Nuclear Regulatory Commission, Washington, DC, February 1973

12.1-9 Standard Test Procedure for Geiger-Müller Counters. RG 8.6, Rev.0, U.S. Nuclear Regulatory Commission, Washington, DC, May 1973

12.1-10 Instructions for Recording and Reporting Occupational Radiation Exposure Data. RG 8.7, Rev. 2, U.S. Nuclear Regulatory Commission, Washington, DC, November 2005.

12.1-11 Acceptable Concepts, Models, Equations, and Assumptions for a Bioassay Program RG 8.9, Rev.1, U.S. Nuclear Regulatory Commission, Washington, DC, July 1993.

12.1-12 Instruction Concerning Prenatal Radiation Exposure. RG 8.13, Rev.3, U.S. Nuclear Regulatory Commission, Washington, DC, June 1999.

12.1-13 Acceptable Programs for Respiratory Protection. RG 8.15, Rev.1, U.S. Nuclear Regulatory Commission, Washington, DC, October 1999.

12.1-14 ~~Applications of Bioassay for I-125 and I-131. RG 8.20, U.S. Nuclear Regulatory Commission, Washington, DC, September 1999.~~Deleted.

12.1-15 Air Sampling in the Workplace. RG 8.25, Rev.1, U.S. Nuclear Regulatory Commission, Washington, DC, June 1992.

12.1-16 ~~Applications of Bioassay for Fission and Activation Products. RG 8.26, U.S. Nuclear Regulatory Commission, Washington, DC, September 1980.~~Deleted.

12.1-17 Radiation Protection Training for Personnel at Light-Water-Cooled Nuclear Power Plants. RG 8.27, Rev.0, U.S. Nuclear Regulatory Commission, Washington, DC, March 1981.

12.1-18 Audible-Alarm Dosimeters. RG 8.28, Rev.0, U.S. Nuclear Regulatory Commission, Washington, DC, August 1981.

12.1-19 Instruction Concerning Risks from Occupational Radiation Exposure. RG 8.29, Rev.1, U.S. Nuclear Regulatory Commission, Washington, DC, February 1996.

12.1-20 ~~Criteria for Establishing a Tritium Bioassay Program. RG 8.32, U.S. Nuclear Regulatory Commission, Washington, DC, July 1988~~Deleted.

12.1-21 Monitoring Criteria and Methods To Calculate Occupational Radiation Doses. RG 8.34, Rev.0, U.S. Nuclear Regulatory Commission, Washington, DC, July 1992.

12.1-22 Planned Special Exposures. RG 8.35, Rev.0, U.S. Nuclear Regulatory Commission, Washington, DC, June 1992.

12.1-23 Radiation Dose to the Embryo/Fetus. RG 8.36, Rev.0, U.S. Nuclear Regulatory Commission, Washington, DC, July 1992.

12.1-24 Control of Access to High and Very High Radiation Areas of Nuclear Plants. RG 8.38, Rev.1, U.S. Nuclear Regulatory Commission, Washington, DC, May 2006.

12.1-25 Generic FSAR Template Guidance for Radiation Protection Program Description. NEI Technical Report 07-03 Revision 5, Mar. 2008.

12.1-26 Quality Assurance Program Requirements (Operation). RG 1.33, Rev.2, U.S. Nuclear Regulatory Commission, Washington, DC, February 1978.

12.1-27 Minimization of Contamination and Radioactive Waste Generation: Life-Cycle Planning. RG4.21, Rev.0, U.S. Nuclear Regulatory Commision, Washington, DC, June 2008.

designed with the ability to be flushed with demineralized water. Strainers are installed in the vent lines to prevent the entry of spent resin into the exhaust duct.

C. Evaporators

Adequate space and flanged connections for easy removal are provided for the maintenance of evaporator components. Additionally, the evaporator can be operated in an automatic operation mode that can reduce the exposure of the operator to radiation from the equipment.

D. Pumps

Wherever practicable, pumps are sealed with mechanical seals to reduce seal servicing time. Pumps and associated piping are arranged to provide adequate space for access to the pumps for servicing. Small pumps are installed to allow easy removal, if necessary. All pumps in the radioactive waste systems are provided with flanged connections for ease of removal. Pump casings are provided with drain connections for draining pumps for maintenance.

E. Tanks

Whenever practicable, tanks are provided with sloped bottoms and bottom outlet connections. Overflow lines are directed to the waste collection system to control any contamination within plant structures. ~~Tank vents are hard-piped to heating, ventilation, and air conditioning (HVAC) ducts, not to open room spaces.~~Tanks containing radioactive fluids are either equipped with open vents to the cubicle or the ventilation system.

Tank cubicles are coated with non-porous material up to a wall height to contain the entire tank content. The cubicles are equipped with a drainage system to direct any leakage and overflows to sumps with pumps to redirect flow to other tanks. The drainage system is equipped with a liquid detection instrument which can provide early warning for leakage and/or overflow condition to initiate operator actions. The floors of these cubicles containing radioactive fluid are sloped to facilitate faster drainage and to minimize liquid accumulation, and provided with coating with non-porous material to prevent cross contamination.

F. Heat Exchangers

Heat exchangers are provided with corrosion-resistant tubes of stainless steel or other suitable materials to minimize leakage. Impact baffles are provided and the tube side and shell side velocities are limited to minimize erosion effects. Wherever possible, the radioactive fluid passes through the tube side of the heat exchanger.

G. Instruments

Instruments are located in low radiation zones and away from radiation sources, whenever practical.

Major components such as tanks, demineralizers, and filters in radioactive systems are isolated in individual shielded compartments as far as practical. Thicknesses of the concrete walls that enclose these components are tabulated in Table 12.3-1.

Labyrinth entranceway shields or shielding doors are provided for each compartment from which radiation could stream or scatter to access areas and exceed the radiation zone dose limits for those areas. For potentially high radiation components (such as demineralizer or heat exchangers and tanks in the primary coolant system), shielded compartments with elevated accessible by ladder/stairs or completely enclosed shielded compartments with hatch openings or removable concrete block walls are used. For instance, the removable blocks have been installed in a wall of the equipment room such as residual heat removal pump room, charging pump room, etc. Provision is made on some major plant components for the removal of these components to lower radiation zones for maintenance.

Equipment in non-radioactive systems that require lubrication is located in lower radiation areas.

Wherever practicable, tube-type extensions are used to lubricate equipment in radiation areas to reduce exposure during maintenance.

Exposure from routine in-plant inspection is controlled by locating, whenever possible, inspection points in properly shielded, low-background radiation areas.

Radioactive and non-radioactive systems are separated as far as practicable to limit radiation exposure from routine inspection of non-radioactive systems. For radioactive systems, emphasis is placed on adequate space and the ease of motion in a properly shielded inspection area. Where longer times for routine inspection are required and permanent shielding is not feasible, sufficient space for portable shielding is provided. For example, a remotely operated device is provided for ISI of the reactor vessel. When this is not practicable, written procedures are used which reduce the total occupancy time in the radiation field. In addition, access to high radiation areas is under the direct supervision of the unit health physics personnel.

F. Field Run Piping

Field run piping will be minimized wherever possible.

Fabrication isometrics of radioactive process piping are reviewed by the plant architect/engineer to ensure that adequate shielding is provided.

G. Decontamination Facilities

A Hot Shower Room is provided in the personnel contamination monitoring area in the Access Building at 3'-7" level for onsite decontamination of personnel. A First Aid Room is also provided in the same general area, next to the Health Physics Room. An equipment decontamination station is placed in the Hot Machine Shop at the basement level(-26'-4") of the Access Building. Service water is provided to various areas throughout the plant and is available for decontamination of instruments and small

equipment items. The decontamination water from these facilities is drained to the Floor Drain Sump and is forwarded to one of the Waste Holdup Tanks for processing.

12.3.1.2 Radiation Zoning and Access Control

12.3.1.2.1 Normal Conditions

12.3.1.2.1.1 Radiation Zoning

Access to areas inside the plant structures and plant yard areas is regulated and controlled by radiation zoning and access control (Section 12.5). Each radiation zone defines the radiation level range to which the aggregate of all contributing sources must be attenuated by shielding.

During plant operation, personnel normally access to radiation-controlled areas through designated access control points determined by the health physics staff.

All plant areas are categorized into radiation zones according to expected radiation levels and anticipated personnel occupancy with consideration given toward maintaining personnel exposures ALARA and within the requirements of 10 CFR 20 (Reference 12.3-2). Each room, corridor, and pipe-way of every plant building is evaluated for potential radiation sources during normal, shutdown, spent resin transfer, and emergency operations; for maintenance occupancy requirements; for general access requirements; and for material exposure limits to determine appropriate zoning.

The radiation zone categories employed and their descriptions are tabulated in Table 12.3-2. The radiation zones for each plant area under normal operation/shutdown conditions are shown in Figure 12.3-1. In Figure 12.3-1, the radiation zones for site is indicated on a typical plant arrangement plan. The COL Applicant is to provide the one that is shown on the site-specific plan.

Radiation zones shown in the figures are based upon conservative design data. Actual in-plant zones and control of personnel access will be based upon surveys conducted by the health physics staff, as described in Section 12.5.

12.3.1.2.1.2 Access Control

Ingress or egress of plant operating personnel to radiation controlled areas is controlled by the plant health physics staff to ensure that radiation levels and exposures are within the limits required in 10 CFR 20 (Reference 12.3-2).

Any area having a radiation level that could result in an individual receiving a dose equivalent in excess of 5 mrem/h at 12” from the radiation source or from any surface that the radiation penetrates will be posted “Caution, Radiation Area.”

12.3.7 References

12.3-1 Information Relevant to Ensuring that Occupational Radiation Exposures at Nuclear Power Stations Will Be as Low as Is Reasonably Achievable. RG 8.8, Paragraph C.2, Rev. 3, U.S. Nuclear Regulatory Commission, Washington, DC, June 1978.

12.3-2 "Standards for Protection against Radiation," Energy. Title 10 Code of Federal Regulations Part 20, U.S. Nuclear Regulatory Commission, Washington, DC.

12.3-3 Control of Access to High and Very High Radiation Areas of Nuclear Plants. RG 8.38, Rev. 1, U.S. Nuclear Regulatory Commission, Washington, DC, May 2006.

12.3-4 'Control of Access to High Radiation Areas,' "Standards for Protection against Radiation," Energy. Title 10, Code of Federal Regulations, Part 20.1601, U.S. Nuclear Regulatory Commission, Washington, DC.

12.3-5 'Posting Requirements,' "Standards for Protection against Radiation," Energy. Title 10, Code of Federal Regulations, Part 20.1902, U.S. Nuclear Regulatory Commission, Washington, DC.

12.3-6 "Plant Shielding," Section II.B.2, Clarification of TMI Action Plan Requirements. NUREG-0737, U.S. Nuclear Regulatory Commission, Washington, DC, January 1980.

12.3-7 "Domestic Licensing of Production and Utilization Facilities," Energy. Title 10, Code of Federal Regulations, Part 50, U.S. Nuclear Regulatory Commission, Washington, DC.

12.3-8 'General Design Criteria for Nuclear Power Plants,' "Domestic Licensing of Production and Utilization Facilities," Energy. Title 10, Code of Federal Regulations, Part 50, Appendix A, U.S. Nuclear Regulatory Commission, Washington, DC.

12.3-9 Concrete Radiation Shields for Nuclear Power Plants. RG 1.69, Rev.0, U.S. Nuclear Regulatory Commission, Washington, DC, December 1973.

12.3-10 Alternative Radiological Source Terms for Evaluating Design Basis Accidents at Nuclear Power Reactors. RG 1.183, Rev. 0, U.S. Nuclear Regulatory Commission, Washington, DC, July 2000.

12.3.11 MicroShield User's Manual Version 7. Grove Software, Inc. 2006

12.3-12 RSICC Computer Code Collection CCC-371, ORIGEN 2.2: Isotope Generation and Depletion Code - Matrix Exponential Method.

12.3-13 RSICC Computer Code Collection CCC-650, DOORS3.2: One, Two- and Three Dimensional Discrete Ordinates Neutron/Photon Transport Code System

12.3-14 RSICC Computer Code Collection CCC-710, MCNP5: Monte Carlo N-Particle Transport Code System

12.3-15 RSICC Computer Code Collection CCC-564, GGG-GP: Kernel Integration Code System Multigroup Gamma-Ray Scattering Using the GP Buildup Factor.

12.3-16 "Annual Limits on Intake (ALIs) and Derived Air Concentrations (DACs) of Radionuclides for Occupational Exposure; Effluent Concentrations; Concentrations for Release to Sewerage," Energy. Title 10, Code of Federal Regulations, Part 20, Appendix B, U.S. Nuclear Regulatory Commission, Washington DC.

12.3-17 'Dose Limits for Individual Members of the Public,' "Standards for Protection Against Radiation," Energy. Title 10, Code of Federal Regulations, Part 20.1301, U.S. Nuclear Regulatory Commission, Washington DC.

12.3-18 'Numerical Guides for Design Objectives and Limiting Conditions for Operation To Meet the Criterion "As Low as is Reasonably Achievable" for Radioactive Material in Light-Water-Cooled Nuclear Power Reactor Effluents,' "Domestic Licensing Of Production And Utilization Facilities," Energy. Title 10, Code of Federal Regulations, Part 50, Appendix I, U.S. Nuclear Regulatory Commission, Washington DC.

12.3-19 Design, Inspection, and Testing Criteria for Air Filtration and Adsorption Units of Post-Accident Engineered-Safety-Feature Atmosphere Cleanup Systems in Light-Water-Cooled Nuclear Power Plants. Regulatory Guide 1.52, Rev. 3, U.S. Nuclear Regulatory Commission, Washington, DC, June 2001.

12.3-20 Design, Inspection, and Testing Criteria for Air Filtration and Adsorption Units of Normal Atmosphere Cleanup Systems in Light-Water-Cooled Nuclear Power Plants. Regulatory Guide 1.140, Rev.2, U.S. Nuclear Regulatory Commission, Washington, DC, June 2001.

12.3-21 "Domestic Licensing of Special Nuclear Material," Energy. Title 10, Code of Federal Regulations, Part 70, U.S. Nuclear Regulatory Commission, Washington DC.

12.3-22 Measuring, Evaluating, and Reporting Radioactivity in Solid Wastes and Releases of Radioactive Materials in Liquid and Gaseous Effluents from Light-Water-Cooled Nuclear Power Plants. RG 1.12, Rev. 1, U.S. Nuclear Regulatory Commission, Washington, DC, June 1994.

12.3-23 Criteria For Accident Monitoring Instrumentation For Nuclear Power Plants . Regulatory Guide 1.97, Rev. 3, U.S. Nuclear Regulatory Commission, Washington, DC.

12.3-24 Guide for Administrative Practices in Radiation Monitoring. Regulatory Guide 8.2, Rev.0, U.S. Nuclear Regulatory Commission, Washington, DC, February 1973.

12.3-25 Sampling and Monitoring Releases of Airborne Radioactive Substances from the Stacks and Ducts of nuclear facilities. American National Standard Institute N13.1-1997.

12.3-26 "Criticality accident requirements." Energy Title 10 Code of Federal Regulations Part 50.68, U.S. Nuclear Regulatory Commission, Washington, DC.

12.3-27 Location and Design Criteria for Area Radiation Monitoring Systems for Light-Water Nuclear Reactors. American National Standard Institute/American Nuclear Society (ANS) HPSSC-6.8.1-1981.

12.3-28 IEEE Standards, IEEE 344 – 1975, IEEE 308-1974

- Better fuel performance has led to fewer refueling outages. Prior to 1990, annual refueling outages were not uncommon. The US-APWR will be on a 24-month cycle.
- ALARA awareness, ALARA training, and ALARA planning included by plant operators in refueling and maintenance activities further reduced unnecessary exposures.
- Refueling and other major outage planning that includes ALARA considerations has led to shorter outages and, therefore, less exposure.
- Plants have also undertaken Cobalt reduction programs to minimize the Cobalt-60 source of radioactivity.

Tables 12.4-1 thorough 12.4-8 are based on RG 8.19 "Occupational Radiation Dose Assessment in Light-Water Reactor Power Plants Design Stage Man-Rem Estimates," Rev 1~~0~~, 1979~~1978~~ (Reference 12.4-1). Use was made of certain data from Revision 0 of this Regulatory Guide because the data from Revision 0 are considered to be reasonable estimates of annual exposure since the data generally agrees with more current similar industry averages. Table 12.4-8 is a summation of the US-APWR's individual dose estimates in person-rem/year. The total annual station exposure is 72.63 person-rem, which is substantially less than the 100 person-rem annual value cited in NUREG -0713 (Reference 12.4-2).

Because of extended fuel cycles (18-24 month), some activities performed concurrently with refueling outages (e.g., major maintenance and ISIs) may not be done annually. The annual doses for a particular reactor may vary around the 100 person-rem average. For this reason, the NRC is also compiling a rolling 3-year average as a better metric to account for the longer fuel cycle. The information in NUREG-0713, Table 4.6 (Reference 12.4-2), lists the 3-year rolling average exposure for US PWRs for the years 2003-2005. The 3-year average exposures at 42 sites (69 PWR reactors) range from 43 person-rem (Seabrook) to 195 person-rem (Palisades). Of the 42 sites, only eight exceeded 100 person-rem per year.

Specific current data from a two-unit Westinghouse four-loop PWR plant site, the Comanche Peak Steam Electric Station, for seven consecutive years is presented in Table 12.4-9. There is a rise in 2002 and 2005 to approximately 120 person-rem per reactor unit due to maintenance and refueling. The average over the 3-year period of 2000 through 2002 and 2003 through 2005 is 75.76 and 75.09 person-rem respectively. This data exemplifies the NRC's reasoning that a three-year rolling average may be a better representation of expected dose rates, and indicates that the expected radiation exposures during the similar operation of the US-APWR may be less than 100 person-rem per year.

The conservative source term and shielding, the nuclear fuel performance, the facility layout, and the equipment and piping layout and design incorporated in the US-APWR design will contribute to lower plant exposures (See Section 12.3). Based on PWR experience cited above from NUREG-0713 (Reference 12.4-2), RG 8.19 (Reference 12.4-1), the Comanche Peak Steam Electric Station data, and the US-APWR design, it is

Table 12.4-3 Occupational Dose Estimates During Routine Maintenance

Activity	Average dose rate (mrem/h)	Exposure time (h)	Number of workers	Frequency	Dose (person-rem/y)
Mechanical: Changing filters:					
Waste filter	100	0.5	1	6/year	**0.3**
Laundry filter	100	0.5	1	10/year	**0.5**
Boric acid filter	100	0.5	1	2/year	**0.1**
Mechanical components *1	10	100	5	1/2year	**2.5**
Electrical components *1	5	200	6	1/2year	**3**
Refurbishing~~Decompositions~~ of valves *1	50	40	4	1/2year	**4**
Reactor Coolant pump *1	10	100	4	1/2year	**2**
Other pumps *1	0.25	100	4	1/2year	**0.05**
Others:					
Radiation management *2	5	1	2	1/day	**3.65**
Washing / decontamination *2	1	1	3	1/day	**1.1**
Operation of equipment *2	1	1	2	1/day	**0.73**
Total					**17.93**

*1 The dose for this activity is taken from data from operating Japanese PWRs. The dose has been adjusted to account for the 24-month refueling cycle currently assumed for the US-APWR.

*2 This activity is part of routine maintenance that is done intermittently and not truly a daily activity. The total yearly dose for this activity is taken from data from operating Japanese PWRs. The remaining quantities were adjusted to match the total yearly dose given the assumption of the frequency being once per day.

Table 12.4-5Occupational Dose Estimates During Refueling

Activity	Average dose rate (mrem/h)	Exposure time (h)	Number of workers	Frequency	Dose (person-rems/y)
Reactor pressure vessel head and internals-removal and installation*	100	20	8	1/2year	**8.0**
Fuel preparation	10	24	2	1/2year	**0.24**
Fuel handling	2.5	100	4	1/2year	**0.5**
Total					**8.74**

* The dose for this activity including servicing of the top-mounted ICIS has been estimated as 16.0 person-rem by MHI for the US-APWR ICIS design. Given the 24-month refueling cycle currently assumed for the US-APWR, the dose has been adjusted to account for this activity occurring only every 2 years.~~MHI has estimated the total dose for **reactor pressure vessel head and internals-removal and installation including** servicing of the top-mounted ICIS as 16.0 person-rems, which on an 24-month refueling cycle results in an equivalent person-rem/year of 1/2 x 16.0 = 8.0 person-rems.~~

Table 12.4-7 Occupational Dose Estimates During Special Maintenance

Activity	Average dose rate (mrem/h)	Exposure time (h)	Number of workers	Frequency	Dose (person-rem/y)
Inspection of SG heat-transfer tube *1	50	40	10	1/2year	**10.0**
Inspection of RCP internal *2	100	90	4	1/10year	**3.6**
Servicing of detectors around core *1	10	10	3	1/2year	**0.15**
Inspection of ICIS guide thimble *3	40	50	8	1/4year	**4.0**
Total					**17.75**

*1 The dose for this activity is taken from data from operating Japanese PWRs. The dose has been adjusted to account for the 24-month refueling cycle currently assumed for the US-APWR.

*2 The dose for this activity is taken from data from operating Japanese PWRs. This activity is assumed to occur only once every ten years. The data for this dose has been adjusted to account for this activity occurring only every 10 years (every 5 cycles).

*3 The dose for this activity has been estimated as 20.0 person-rem by MHI for the US-APWR ICIS design. This activity is assumed to occur only every other refueling. Given the 24-month refueling cycle currently assumed for the US-APWR, the dose has been adjusted to account for this activity occurring only every 4 years (every 2 cycles).

Chapter 13

13.2 Training

The development of training programs is designated as the responsibility of the COL Applicant. The training program development is consistent with the human-system interface (HSI) guidance in Chapter 18 (Ref. 13.2-1, 13.2-2, 13.2-3).

13.2.1 Plant Staff Training Program

13.2.1.1 Program Description

NEI 06-13A, "Template for an Industry Training Program Description" Revision 1, provides a complete generic training program description for use with COL applications. The document reflects guidance provided by the NRC and by Industry-NRC discussions on training-related issues. The NRC has deemed NEI 06-13A as an acceptable template for describing reactor operator and non-licensed plant staff training programs.

The development of the site specific training program is designated as the responsibility of the COL Applicant. However; NEI 06-13A should be utilized as the template for program basic structure and content.

~~The development of the training program description is designated as the responsibility of the COL Applicant.~~

13.2.1.1.1 Licensed Plant Staff Training Program

The development of the Licensed Plant Staff Training Program is designated as the responsibility of the COL Applicant. However; NEI 06-13A should be utilized as the template for program basic structure and content.

~~In accordance with U.S. Nuclear Regulatory Commission (NRC) Technical Report Designation (NUREG) 0800, Section 13.2.1.I.3 (Ref. 13.2-4), the development of training programs for reactor operators is designated as the responsibility of the COL Applicant.~~

13.2.1.1.2 Non-licensed Plant Staff Training Program (to be verified during construction)

The development of the Non-licensed Plant Staff Training Program is designated as the responsibility of the COL Applicant. However; NEI 06-13A should be utilized as the template for program basic structure and content.

~~In accordance with NUREG-0800, Section 13.2.2.I.3 (Ref. 13.2-4), the development of training programs for non-licensed plant staff is designated as the responsibility of the COL Applicant.~~

13.2.1.2 Coordination with Preoperational Tests and Fuel Loading

The development of training programs is designated as the responsibility of the COL Applicant. These programs include a chart, which shows the schedule of each part of the training program for each functional group of employees in the organization in

13.3 Emergency Planning

Emergency planning is designated as the responsibility of the COL Applicant. However, design features, facilities, functions, and equipment necessary for emergency planning are considered in the design bases for the standard plant (Ref. 13.3-1, 13.3-2, 13.3-3, 13.3-4, 13.3-5). Details of these features, as they relate to the basic design, are included as follows and are consistent with the descriptions in Chapter 7.~~:~~ Interfaces of these features with site-specific designs and site parameters are the responsibility of the COL Applicant.

- Technical Support Center (TSC)

  The onsite TSC is an onsite facility that provides plant management and technical support to the plant operations personnel during emergency conditions as described in subsection 7.5.1.6.1. The TSC has technical data displays and plant records available to assist in the detailed analysis and diagnosis of abnormal plant conditions and any significant release of radioactivity to the environment. The TSC provides the following functions:

  - The TSC has facilities to support the plant management and technical personnel who are assigned there during an emergency.

  - The TSC is the primary onsite communications center for the plant during an emergency.

  - The facility consists of a plant data display system by visual display units and large display panel. These equipments are redundant including these power supplies. The TSC displays include,

    - Plant systems variables,
    - In-plant radiological information,
    - Meteorological information, and
    - Offsite radiological information.

  - The TSC provides telephones and facsimiles, which utilize by multiple methods of telecommunication including private and public lines, satellite communications, and ample working areas for all personnel as described in section 9.5.2.

  - The TSC is close to the main control room (MCR), located in the access~~uxiliary~~ building (AC/B). The walking time from the TSC to the MCR does not exceed 2 minutes.

  - Working space, without crowding, for the personnel assigned to the TSC at the maximum level of occupancy is approximately 75 square feet per person.

    - The TSC working space is sized for a minimum of 25 persons including 20 persons designated by the licensee and five NRC personnel. The size

and layout of TSC gives necessary space to maintain and repair TSC equipment, and is sufficient for storage of plant records and historical data.

- A TSC heating, ventilation, and air conditioning (HVAC) system is provided that includes high-efficiency particulate air and charcoal filters as described in subsection 9.4.3.1.2.4.
  - The TSC HVAC system functions in a manner comparable to the main control room HVAC system.
  - The TSC HVAC need not be seismic Category I qualified, redundant, instrumented in the MCR, or automatically activated to fulfill its role.

- Emergency Operations Facility (EOF)

  The EOF is a near-site or on-site support facility for the management of overall licensee emergency response (including coordination with Federal, State, and local officials), coordination of radiological and environmental assessments, and determination of recommended public protective actions.

  - The EOF has the appropriate technical data displays and plant records to assist in the diagnosis of plant conditions and to evaluate the potential or actual release of radioactive materials to the environment.
  - The EOF computer provides plant data displays to assist in the diagnosis of plant conditions and to evaluate the potential or actual release of radioactive materials to the environment.
  - A senior licensee official in the EOF organizes and manages licensee offsite resources to support the TSC and the MCR operators.

- Emergency Response Data System (ERDS)

  The ERDS is a data transmission system. This system is designed to send a set of variables from the plant to the NRC Operations Center. This data may be used for analyses by the NRC headquarters technical support groups and the NRC executive team. The ERDS provides for the following functions:

  - This system fulfills the function of the emergency response data system of Appendix E to Title 10, Code of Federal Regulations (CFR), Part 50 (Ref. 13.3-1).
  - This system transmits information that aids the NRC in its role of providing advice and support to the nuclear power plant licensee, State and local authorities, and other Federal officials.

- Data communication with the TSC, the EOF, and the ERDS

- The functions and design of SPDS in the MCR are realized as a part of the overall HSI design

The Postaccident Sampling System (PASS) is provided for emergency planning. It is described in section 9.3.2 and 12.3.

Other Emergency Facilities

Personnel and equipment decontamination facilities for normal operation are located in the Access Building and described in Subsection 12.3.1.1.2. These facilities would be used in emergency conditions as part of the site Emergency Plan.

13.3.1 Combined License Application and Emergency Plan Content

The development of a comprehensive emergency plan shall be designated as the responsibility of the COL Applicant. The plan is a physically separate document (Section 13.3 of the Final Safety Analysis Report (FSAR)) and incorporates, by reference, State and local emergency plans. It includes copies of letters of agreement from State and local governmental agencies with emergency planning responsibilities.

The FSAR addresses emergency classification and action level scheme. It also addresses security-related aspects of emergency planning.

13.3.2 Emergency Plan Considerations for Multi-Unit Site

The development of the emergency plan for multi-unit site is designated as the responsibility of the COL Applicant depending on the location of the new reactor on, or near, an operating reactor site with an existing emergency plan.

13.3.3 Emergency Planning Inspections, Tests, Analyses, and Acceptance Criteria

The development of emergency planning inspections, tests, analyses, and acceptance criteria are designated as the responsibility of the COL Applicant.

13.3.4 Combined License Information

COL 13.3(1) *The COL Applicant is to develop interfaces of design features with site specific designs and site parameters.*

COL 13.3(2) *The COL Applicant is to develop a comprehensive emergency plan as a physically separate document.*

COL 13.3(3) *The COL Applicant is to develop an emergency classification and action level scheme.*

COL 13.3(4) *The COL Applicant is to develop the security-related aspects of*

13.5 Plant Procedures

The development of administrative and operating procedures to be used by the operating organization (plant staff) is designated as the responsibility of the COL Applicant. Detailed written procedures are not included in the FSAR; however, a brief description of the nature and content of the procedures and a schedule for their preparation is developed (Ref. 13.5-1, 13.5-2). The development of plant procedures is described in Section 18.8, Procedure Development.

13.5.1 Administrative Procedures

Administrative procedures describing administrative controls over activities that are important to safety for the operation of a facility are to be developed by the COL Applicant. Regulatory Guide (RG) 1.33 (Ref. 13.5-1) policies and procedures or specifically described alternative methods are utilized. A target date for completion of operating procedures prior to fuel loading is established.

Administrative procedures address those that provide administrative controls and those for control of operational activities of the plant staff.

13.5.2 Operating and Maintenance Procedures

Operating and maintenance procedures are developed by the COL Applicant.

13.5.2.1 Operating and Emergency Operating Procedures

Procedures performed by licensed operators in the MCR are developed by the COL Applicant.

However, these procedures shall utilize the US-APWR Procedure Writer's Guide as a template in development of their Plant Operating Procedure Development Plan to ensure consistency in organization, format, and content of the procedures.

- Procedures shall be developed to accomplish the functions contained in the listing of Regulatory Guide 1.33.

Emergency Operating Procedures shall utilize the US-APWR Emergency Operating Procedure Writer's Guide (including generic technical guidelines) as a template in the development of their Emergency Operating Procedure Development Plan (e.g., procedures generation package (PGP)) to ensure consistency in organization, format, and content of the procedures.

- This development package shall be submitted to the NRC for review at least 3 months prior to the commencement of formal operator training.

A Computer Based Procedure (CBP) with corresponding Paper Based Procedure (backup) and stand-alone paper procedure program will be developed utilizing the US-APWR programs as a template for program development.

~~Procedures performed by licensed operators in the MCR are developed by the COL Applicant. Operating procedures that are used by the operating organization to ensure routine operating, off-normal, and emergency activities are conducted in a safe manner are described. The plan includes the implementation of these procedures (Ref. 13.5-3).~~

13.5.2.1.1 Procedure Classification

The COL Applicant is to describe the different classifications of procedures the operators will use in the MCR and locally in the plant for operations, the operating organization responsible for maintaining the procedures, and the general format and content of the different classifications. The classifications must be sufficient enough to ensure that procedures will be available to the plant staff to accomplish the functions contained in the listing of RG 1.33.

13.5.2.1.2 Operating Procedure Program

The COL Applicant is to describe the program for developing and implementing operating procedures. Target dates for completion of program elements are developed.

13.5.2.1.3 Emergency Operating Procedure Program

The COL Applicant is to describe the program for developing and implementing emergency operating procedures. Target dates for completion and submittal to the NRC (as required) of program elements are also be developed. This procedures generation package includes a plant specific technical guideline, a plant specific writer's guide, a description of a program for verification and validation, and a description of the program for training operators on emergency operating procedures.

13.5.2.2 Maintenance and Other Operating Procedures

The COL Applicant is to describe the classifications of maintenance and other operating procedures, the operating organization group or groups responsible for following each class of procedure, and the general objectives and character of each class and subclass.

13.5.3 Combined License Information

COL 13.5(1) *The COL Applicant is to develop administrative procedures describing administrative controls over activities that are important to safety for the operation of a facility.*

COL 13.5(2) *Deleted*

Chapter 14

14.2 Initial Plant Test Program

14.2.1 Summary of Test Program and Objectives

The initial test program (ITP) of the US–APWR plant is described in this chapter. Activities associated with the ITP occur as a part of the initial plant startup.

The ITP conforms to the relevant requirements of the regulations listed below.

- Title 10, Code of Federal Regulations (CFR) Part 30.53 (Reference 14.2-1) as it relates to testing radiation detection equipment and monitoring instruments.
- 10 CFR 50.34(b)(6)(iii) (Reference 14.2-2) as it relates to providing information associated with preoperational testing and initial operations.
- Section XI of Appendix B of 10 CFR 50 (Reference 14.2-3) as it relates test programs to demonstrate that systems, structures, and components (SSCs) will perform satisfactorily.
- ~~Section III.A.4~~Option B of Appendix J of 10 CFR 50 (Reference 14.2-4) as it relates to preoperational leakage rate testing of the containment.
- 10 CFR 52.79 (Reference 14.2-5) as it relates to preoperational testing and initial operations.
- Subpart A, Subpart B, and Subpart C, of 10 CFR 52 (Reference 14.2-6) as they relate to the inspections, tests, analyses, and acceptance criteria (ITAAC).

The objectives of the ITP include a demonstration that the plant construction is in compliance with the plant design; that the plant systems perform in accordance with that design; and that the initial fuel load, initial criticality, low power testing, and power ascension testing are performed in an approved predetermined methodology.

Preoperational and startup testing is performed on SSCs that are:

- Required for safe reactor shutdown and cooldown under normal plant conditions and for maintaining the reactor in a safe condition for an extended shutdown period
- Required for safe reactor shutdown and cooldown under transient (infrequent or moderate frequent events) conditions and postulated accident conditions and for maintaining the reactor in a safe condition for an extended shutdown period following such conditions
- Required for establishing conformance with safety limits (SLs) or limiting conditions for operation (LCOs) included in Chapter 16, “Technical Specifications”
- Classified as engineered safety features (ESF) or classified as required to support or ensure the operation of engineered safety features within design limits

- Assumed to function or which are credited in the accident analysis of the US-APWR DCD
- Required to process, store, control, and/or limit the release of radioactive materials
- Used in the special low-power testing program to be conducted at power levels no greater than five percent for the purposes of providing meaningful technical information beyond that obtained in the normal startup test program as required for resolution of Three Mile Island (TMI) action plan item I.G.1 (Reference 14.2-7)
- Identified as risk-significant as discussed and identified in Subsection 17.4.7 and Table 17.4-1

The ITAAC required by 10CFR 52.47(b)(1) (Reference 14.2-8) for the US-APWR design are found in the Tier 1 document. The criteria for ITAAC selection are contained in Section 14.3, inspections, tests, analyses, and acceptance criteria.

The ITP consists of construction, preoperational, and startup tests.

Following the plant construction, testing is accomplished to demonstrate the proper performance of SSCs and design features.

Preoperational tests do not begin until construction and designated construction tests of the system are essentially completed. Preoperational tests are performed in cold conditions and at elevated temperatures produced by reactor coolant pump and pressurizer heater operation.

The initial fuel loading marks the beginning of startup testing. Startup tests as defined by Subsection 14.2.1.2.3 are performed to demonstrate that plant systems meet the performance requirements and that the plant can operate in an integrated fashion.

The preparation and performance of preoperational and startup tests are the responsibility of the COL licensee.

The ITP described in this chapter only addresses those systems and components within the US-APWR. ~~The COL applicant is responsible for describing~~A description of the program for the testing of other components and systems that are site-specific is discussed in US-APWR Test Program Description Technical Report, MUAP-08009 (Reference 14.2-29). Testing of these items demonstrates that they meet requirements as defined in the Final Safety Analysis Report (FSAR).

14.2.1.1 Test Program for Nuclear and Balance of Plant Systems

Preoperational and startup testing is conducted in accordance with an approved manual containing ITP administrative controls. The manual is prepared by the startup organization. Final approval of the manual is by the designated plant management. The preparation and approval of the manual is completed prior to the preparation of the first test procedure. This manual contains the administrative procedures and requirements

that govern the activities of the startup organization and its interface with other organizations.

The procedures within the manual perform the following functions:

- Provide the organization of the startup organization and staffing (Subsections 14.2.2 and 14.2.2.1).
- Describe the preoperational and startup test procedure preparation, review, and approval (Subsection 14.2.3).
- Describe the conduct of testing of the ITP and the controls (Subsection 14.2.4)
- Specify the process for the evaluation, review and approval of the individual test results (Subsection 14.2.5).
- Specify the retention period of the test results and describe how the ITP results are compiled and maintained (Subsection 14.2.6).
- Establish the requirements for transitioning between test phases and between power test plateaus (Subsections 14.2.5.1, 14.2.10.1, 14.2.10.2, and 14.2.10.3).

The ITP includes tests on systems in both the nuclear portion of the plant, the balance of plant, or non-nuclear areas. The tests conducted on safety-related systems demonstrate the capability of the SSCs to meet performance requirements and design criteria. The tests on non safety-related systems verify the operability of the systems and/or components and their capability to support safety-related systems, where applicable. The testing continues through the initial fuel loading, startup, and power ascension.

Tests are performed to demonstrate the operation of each system independently and the operation of the systems in an integrated plant environment.

14.2.1.2 Major Phases of ITP

14.2.1.2.1 Construction Tests

Construction and preliminary tests and inspections typically consist of activities such as hydrostatic pressure tests, flushing, cleaning, wiring continuity and separation checks, electrical distribution protection relays, initial instrument calibrations, valve functional checks, motor rotational checks, etc., and functional tests of components.

The objective of the construction and preliminary tests and inspections test phase is to verify and document that construction and installation of equipment in the facility have been accomplished in accordance with design, and that the equipment and components are functional and ready for preoperational testing.

Construction test abstracts are not included in this section. The development of construction and installation tests is based on engineering design, applicable industry standards and vendor information. A construction test matrix is developed for each system listing required tests and inspections for piping, wiring, equipment, valves,

instruments and control devices. The test requirements are determined using tests listed in Regulatory Guide (RG) 1.68 Appendix C, Item 1.a (3), ITAAC tests, specific safety functions identified in the FSAR, vendor recommendations, design requirements, applicable U.S. Nuclear Regulatory Commission (NRC) RGs and NUREGs and industry standards as identified in the FSAR, and non-safety related functional performance attributes. The construction test matrix identifies the required tests and provides justification for any tests which are determined not to be required. The construction test matrix is approved by engineering, operations and the test organizations prior to the start of testing.

Division of responsibilities and administrative controls for construction tests are discussed in US-APWR Test Program Description Technical Report, MUAP-08009 (Reference 14.2-29).~~These tests are performed by either construction or the startup organization, as determined by the COL licensee, using a program determined by the COL licensee.~~

14.2.1.2.2 Preoperational Tests

Preoperational tests are performed after the construction tests are complete and prior to fuel loading.

The major objectives of the preoperational test phase are:

- To demonstrate and document that SSCs operate in accordance with design in all operating modes throughout the full design operating range,
- To verify that systems, and interactions between systems and components, are capable of fulfilling their design bases,
- To demonstrate, to the extent practical, performance of safety-related SSCs and design features during normal and anticipated abnormal operating conditions, in order to maintain the plant in a safe condition,
- To validate, to the extent practical, plant response to transients, failures or malfunctions that could reasonably be expected to occur during the plant's lifetime, by simulation of the effects of control systems and equipment failures or malfunctions. These failures or malfunctions are well understood through historical operating experience and include, but are not limited to, pump trips, instrument failures or malfunctions, valve failures or malfunctions, and loss of power events. Testing is limited to methods which do not degrade equipment performance or reliability, i.e., nondestructive testing,
- To familiarize the plant's operating and technical staff with the operation of the facility,
- To verify that the normal, abnormal and emergency operating procedures, and surveillance procedures, are adequate through trial use,
- To operate equipment for a sufficient period to identify and correct any defects,

The general objectives of the startup test phase are:

- To perform a careful, deliberate, orderly and safe transition to full rated power within the operating limits and controls of the Technical Specifications,
- To plan and perform a controlled and safe initial core loading,
- To verify reactor monitoring, control and shutdown features necessary for a safe approach to initial criticality and subsequent power ascension,
- To achieve initial criticality in a controlled and safe manner,
- To assure plant operation remains within design and operating parameters during low power and subsequent power ascension testing,
- To provide the specific operator training related to the resolution of TMI action plan item I.G.1 during low-power testing,
- To verify the correctness or conservatism of assumptions used in the safety analyses,
- To confirm the operability of plant systems and design features that could not be completely tested during preoperational test, and
- To provide assurance that the integrated dynamic response is in accordance with design for plant events

Startup tests include steady-state and transient tests. They demonstrate adequate performance of the nuclear steam supply system (NSSS) and the other systems at various power levels.

14.2.2 Organization and Staffing

The COL licensee has the ultimate responsibility for the conduct of the ITP. The COL licensee establishes an organization to perform functions required for the US-APWR plant ITP. This organization manages, supervises, executes, and documents all phases of the ITP. It is described in approved administrative procedures that address organizational authorities and responsibilities and the degree of participation of each identified organizational unit and the principal participants. Administrative controls assure that personnel formulating and conducting the test activities are not the same personnel who designed or are responsible for the satisfactory performance of the system(s) or design feature(s). This provision does not preclude members of the design organization from participating in the performance of test activities.

~~The COL applicant provides a~~A preliminary description of the organization(s) responsible for all phases of the ITP, and ~~provides~~ a description of the administrative controls that assure that experienced and qualified supervisory personnel and other principal participants are responsible for managing, developing, and conducting the ITP is provided in US-APWR Test Program Description Technical Report, MUAP-08009 (Reference 14.2-29). The COL Applicant reconciles the site-specific organization, organizational titles, organizational responsibilities, and reporting relationships to be consistent with this description.

The startup organization develops test procedures. The test procedures are prepared in accordance with the approved administrative procedures. Controls are established to assure that procedures are prepared in adherence to U.S. Nuclear Regulatory Commission (NRC) Regulatory Guides (RGs). Controls assure that the startup organization provides the approved test procedures to the NRC at least 60 days prior to their use. The startup organization reconciles any concerns the NRC may have with the test procedures.

The ~~COL applicant provides the~~ process used to develop test specifications and test procedures is described in US-APWR Test Program Description Technical Report, MUAP-08009 (Reference 14.2-29).

Before proceeding with testing, the COL licensee is to establish controls relating to the methods used for initial review of individual parts of multiple tests (e.g., hot functional testing) in order to assure coordination of plant conditions related to these tests.

14.2.3.1 Organizational Functions during Development, Review and Approval of Test Procedures

The startup organization conducts preoperational and startup tests in accordance with approved test procedures. Administrative procedures govern the activities of the startup organization and its interface with other participants involved in the ITP. The review and approval process for both initial procedures and subsequent revisions are defined.

An approved program is used to develop, review, and approve the individual test procedures, including the organizational units or personnel performing the activities and their respective responsibilities. This includes the designated functions of each organizational unit, as well as the general steps to be followed in conducting the development, review, and approval of the test procedures. The program is documented in administrative procedures.

The test requirements and test procedures are developed and reviewed by personnel with appropriate technical backgrounds and experience. This includes the participation of principal design organizations (e.g., MHI, architect engineer, etc.) to establish test performance requirements and acceptance criteria. MHI and other major participants associated with the ITP (including equipment suppliers, as applicable), provide plant system information specific enough to prepare the test procedures. The test procedures are reviewed by the startup organization and receive final approval by the designated plant management personnel.

14.2.3.2 Test Procedure Content

The test procedures contain safety precautions and limitations, objectives, prerequisites, initial conditions, methods to direct and control test performance (including the sequencing of testing), acceptance criteria, and the format by which data or observations are recorded, and the data analysis methods. Administrative procedures control the test procedures content and format. Subsection 14.2.3.5 specifies the format of the test procedures.

- Process to resolve failure to meet test acceptance criteria and design deficiencies
- Description of the ITP phases and requirements for transitioning between phases
- Description of requirements for satisfying hold point requirements within a phase
- Method to track as-tested system status
- Method to track system modifications for systems already tested
- Method to track retest requirements required by system modifications and the failure to meet test acceptance criteria
- Startup organization personnel qualifications and responsibilities

The function of ITP administrative procedures is to provide controls for the relatively temporary requirements of the ITP. Plant administrative procedures provide controls for permanent plant requirements and are in effect during the ITP.

~~The COL applicant develops a~~A description of the administrative controls that govern the conduct of the test program is provided in US-APWR Test Program Description Technical Report, MUAP-08009 (Reference 14.2-29). These controls include requirements that govern the activities of the startup organization and their interface with other organizations.

14.2.4.1 Administrative Controls for Test Prerequisites

Prerequisites are those items that must be completed prior to performance of the test or a subsection of the test. ITP administrative procedures describe the use of test prerequisites. The controls include inspections, checks, and other applicable controls, the identification of test personnel completing the data forms or checklists, and the dates of completion. Individual test procedures and each major phase of the test program adhere to these controls.

14.2.4.2 Use of Plant Modifications and Maintenance During Testing

Methods are developed for initiating plant modifications or the maintenance necessary to conduct the test program. The methods are documented in ITP administrative procedures. Temporary plant modifications may be used to test a system and are treated as initial conditions for test conduct. Temporary plant modifications are returned to normal upon the test completion. This is documented in the system restoration section of the test procedure. Permanent plant modifications may be needed to resolve deficiencies discovered during test conduct. Permanent plant modifications are controlled and documented in accordance with plant administrative controls. Maintenance activities may be required prior to a system test to facilitate testing. Maintenance activities may also be required to resolve deficiencies discovered during test conduct.

outside the plant operating organization, as appropriate, have the opportunity to review the test results for conformance to expectations. Test results, including the resolutions of test deficiencies, are reviewed and initially approved by the designated startup organization personnel. The final approval is obtained from the designated level of plant management.

The final review of the individual tests is the responsibility of the plant management, which is also responsible for the final review of the overall test results and for the review of selected milestones or hold points within the test phases.

~~The COL applicant develops a~~A description of the specific controls for the review, evaluation, and approval of the test results of the program by appropriate personnel and/or organizations, including the methods and ~~schedules~~ sequence for approval of test data for each major phase, is provided in US-APWR Test Program Description Technical Report, MUAP-08009 (Reference 14.2-29).

14.2.5.1 Review, Evaluation, and Approval of Test Results for each Major Test Phase

A method is developed for the approval of the test results for each major test phase before proceeding to the next test phase.

ITP administrative controls specify the process for the review and approval of test results for each major test phase. The startup organization initially approves the overall test phase results and the test results of the major test phases. The designated level of the plant management has the responsibility for the final review and approval. Steps taken when the test data does not meet the defined acceptance criteria are delineated in Subsections 14.2.5.3 and 14.2.5.4.

14.2.5.2 Review, Evaluation, and Approval of Test Results at each Power Test Plateau

A method is developed for the approval of the test results at each power test plateau before increasing the power level.

ITP administrative controls specify the process for the review, evaluation and approval of test results prior to transitioning to the next power test plateau. The startup organization initially approves the test results of each power test plateau. The designated level of the plant management has the responsibility for the final review and approval. Steps taken when the test data does not meet the defined acceptance criteria are delineated in Subsections 14.2.5.3 and 14.2.5.4.

14.2.5.3 Notification when Acceptance Criteria Not Met

ITP administrative controls specify the process for the review of the test results. Individual test results are evaluated and reviewed by members of the startup organization. Test exceptions or the failure to meet acceptance criteria are communicated to the affected and responsible organizations.

14.2.5.4 Resolution of Failed Acceptance Criteria

ITP administrative controls specify the method for resolution of a failure to meet acceptance criteria and other operational problems or design deficiencies discovered during the testing process. Test exceptions or the failure to meet acceptance criteria are communicated to the affected and responsible organizations that help resolve the issues with suggested corrective actions, design modifications, retests, or other remedies, as appropriate. The evaluation of the test results may result in accepting the system as tested or may require modification and/or maintenance and retest to verify that the steps taken to correct the deficiency are adequate. All resolutions are documented in accordance with approved administrative controls.

14.2.5.5 Test Data Approval

ITP administrative controls specify the process for the review and approval of test data, versus test results. The individual test data may require engineering review and/or analysis prior to the approval of the test results. The startup organization performs the initial approval and the designated level of the plant management has the responsibility for the final review and approval of the test results.

14.2.6 Test Records

The ITP results are compiled and maintained according to ITP administrative procedures that comply with applicable regulatory requirements. A summary of the startup testing is included in a startup report prepared in accordance with the guidance in RG 1.16 (Reference 14.2-12). The summary includes a description of the method and objectives for each test, a comparison of applicable test data with the related acceptance criteria, including the systems' responses to major plant transients (such as reactor trip and turbine trip), design- and construction-related deficiencies discovered during testing, system modifications and corrective actions required to correct those deficiencies, the schedule for implementing these modifications and the corrective actions unless previously reported to the NRC, the justification for the acceptance of systems or components that are not in conformance with the design predictions or the performance requirements, and the conclusions regarding the system or component adequacy.

Controls are in place for the disposition of test procedures and test data following the completion of the test program.

Test records, including test procedures and results, that demonstrate the adequacy of safety-related SSCs are retained for the life of the plant. The retention periods for other test records are based on the consideration of their usefulness in documenting the initial plant performance characteristics. The test records are retained in accordance with the guidance in RG 1.28 (Reference 14.2-11).

~~The COL applicant develops a~~A description of the specific controls for the preparation and retention of test records is provided in US-APWR Test Program Description Technical Report, MUAP-08009 (Reference 14.2-29).

14.2.7 Conformance of Test Program with RGs

The development of the preoperational and startup test program adheres to the guidance of the NRC RGs associated with the ITP. These RGs are listed in Table 14.2-2. Conformance with the guidance of RGs are defined in Table 1.9.1-1, US-APWR Conformance with Division 1 RGs.

14.2.8 Utilization of Reactor Operating and Testing Experience in the Development of Test Program

Because the US-APWR plant is based on the development of previous pressurized-water reactor (PWR) plants, the US-APWR plants have the benefit of experience acquired with the successful and safe startup of many previous PWR plants in Japan. The operational experience and knowledge gained from these plants and other reactor types are factored into the design and test system information of US-APWR equipment and systems that are demonstrated during the preoperational and startup test programs. Additionally, reactor operating and testing experience of similar nuclear power plants obtained from NRC Licensee Event Reports, Institute of Nuclear Operations correspondence, Significant Operating Event Reports, and through other industry sources is utilized to the extent practicable in developing and carrying out the ITP. Special importance is attached to repeat reportable occurrences experienced involving safety concerns and other operating experiences that could potentially impact the performance of the test program.

14.2.8.1 Preoperational and/or Startup Testing for Unique or First-of-a-Kind Principal Design Features

First-of-a-kind tests are special tests performed to verify unique performance parameters for new design features. Since these design features are new, the tests have not been performed for the design certification of previous plants. Because of the standardization of the US-APWR design, the parameters will not change from plant to plant and thus the tests are performed only on the first plant containing the unique design.

These first-plant-only tests are identified in the individual test descriptions in Subsection 14.2.12. The following is a listing of the first plant only tests, and the corresponding subsection in which they appear. The COL holder for the first plant is to perform these tests. For subsequent plants, either these tests are performed, or the COL applicant provides a justification that the results of the first-plant only tests are applicable to the subsequent plant and are not required to be repeated.

First-Plant-Only Test	Subsection
Reactor Internals Vibration Test	14.2.12.1.7
~~Natural Circulation Test~~	~~14.2.12.2.3.9~~
Rod Cluster Control Assembly (RCCA) Misalignment Measurement and Radial Power Distribution Oscillation Test	14.2.12.2.4.5

There could be other special tests that further establish a unique performance parameter of the US-APWR design features beyond the testing performed for the design

certification for previous plants and, which will not change from plant to plant, that are performed for the first three plants. There are no first-three-plants tests required.

The justifications for the first-plant-only tests and the justifications for there being no first-three-plant tests required are provided below:

14.2.8.1.1 Reactor Internals Vibration Test (14.2.12.1.7)

Preoperational vibration test of reactor internals is performed in accordance with RG 1.20 (Reference 14.2-13). This program is discussed in Subsection 3.9.2.

This test is conducted only during the hot functional test prior to fuel loading because the vibration responses under normal operating conditions with core are predicted to be almost the same or slightly lower than those under hot functional tests without the core loaded.

Justification for performing this on the first plant only is provided in Subsections 3.9.2.3 and 3.9.2.4.

~~14.2.8.1.2 Natural Circulation Test (14.2.12.2.3.9)~~Deleted

14.2.8.1.2 ~~The natural circulation test using steam generators (SGs) is performed in the startup test phase of the first US-APWR as a prototype test. It is unnecessary for following plants to compare flow and temperature data (without reactor coolant pumps [RCPs]) and temperature data to that of this plant because no design differences exist that would significantly affect natural circulation capabilities.~~

14.2.8.1.3 RCCA Misalignment Measurement and Radial Power Distribution Oscillation Test (14.2.12.2.4.5)

RCCA misalignment measurements and radial power distribution oscillation tests are performed in the power ascension test phase for the first US-APWR. The test is required only for the first plant because the stability of the radial power distribution is dependent upon the core diameter only. This test validates the calculation tools and instrument responses.

14.2.8.2 Prototype Test Results

14.2.8.2.1 Natural Circulation Testing

For subsequent plants, evaluation of the results of previous natural circulation tests and comparison of RCS hydraulic resistance coefficients applicable to normal flow conditions are evaluated as a basis to propose, with NRC concurrence, omitting the natural circulation test provided that

- Test results from the reference prototype plant indicate that natural circulation flow rates are adequate to ensure that core decay heat removal, boron mixing, plant cooldown/ depressurization, and stable natural circulation conditions are maintained throughout the test.

- The as-built plant configuration is the same relative to the general configuration of the piping and components in each reactor coolant loop, the general arrangement of the reactor core and internals, and similar elevation head represented by these components and the system piping.

- The hydraulic resistance coefficients applicable to normal flow conditions and temperature data, and loss of coolant flow delay-time data (as measured during the RCS Flow Measurement Test in Subsection 14.2.12.2.4.12 and during the RCS Flow Coastdown Test in Subsection 14.2.12.2.1.13) are comparable with the reference prototype plant.

The results of the natural circulation test from the reference prototype plant are incorporated into the operator simulator and used in the operator training program to provide training on plant evaluation and off-normal events for each operating shift.

14.2.9 Trial Testing of Plant Operating and Emergency Procedures

Plant operating and emergency procedures are, to the extent practical, developed, trial-tested, and corrected during the ITP prior to fuel loading to establish their adequacy. Preoperational and startup test procedures utilize plant operating, surveillance, emergency, and abnormal procedures either by reference or verbatim incorporation in the performance of tests. This verifies the plant procedures by actual use and provides experience to the plant personnel.

The COL applicant provides a schedule for the development of plant procedures that assures that required procedures are available for use during the preparation, review and performance of preoperational and startup testing.

14.2.9.1 Operator Training during Special Low-Power Testing

At approval to load fuel, by virtue of being licensed by the NRC to operate the plant, the ROs/SROs have a responsibility for the operation of the plant. Therefore, at this point, the plant operations organization assumes responsibility for the plant. This period is used to further the training of licensed operators and provide training for operator trainees. This includes identifying the specific operator training to be conducted as a part of the use-testing during the special low power testing program required by the resolution of NUREG-0737 (Reference 14.2-7) TMI action plan item I.G.1. Meeting this requirement includes identifying proposed tests to be conducted, submitting analysis to support the test, submitting the test procedure, training to the test procedure and evaluating and documenting the results of the training.

14.2.10 Initial Fuel Loading and Initial Criticality

Fuel loading and initial criticality is conducted in accordance with the guidance of RG 1.68 (Reference 14.2-10). This phase of the ITP is performed in a controlled manner as prescribed in approved detailed written procedures. These procedures specify the following:

- System test prerequisites

- System status
- Detailed step-by-step test instructions
- Precautions
- Responses to unexpected conditions

14.2.10.1 Initial Fuel Loading

When the plant is declared ready to load fuel, a predetermined set of specific checks is made prior to beginning the fuel loading. A review is conducted of the appropriate preoperational test results and the status of design changes, and any retests that were performed due to preoperational test deficiencies or exceptions. All other ongoing activities are checked to assure that there are no adverse impacts on safe fuel loading. Technical specification surveillances are implemented to assure the operability of systems required for fuel loading. Immediately before fuel loading, proper reactor vessel water level and reactor coolant chemistry are verified and nuclear instruments are checked.

The 15 prerequisites for fuel loading listed in Section 2.a. of RG 1.68 (Reference 14.2-10), Appendix C are included as described in Subsection 14.2.12.2.1.~~1~~3.

RG, 1.206, Section C.I.14.3, ITAAC (Reference 14.2-14), states that the successful completion of all ITAAC is a prerequisite for fuel load and a condition of the license. Therefore, the ITAAC is verified to be completed prior to the fuel loading.

The initial fuel loading is supervised by a licensed SRO with no concurrent duties. For the initial fuel loading a full core of fuel assemblies is transferred from the fuel pit to the reactor core. Each fuel assembly is identified by a unique serial number. The fuel loading procedure identifies which fuel assembly is placed into each core position. In conjunction with the fuel assemblies, control rods, burnable poison assemblies, and primary and secondary neutron sources are installed in the reactor vessel. The procedure specifies predetermined checks of shutdown margin and subcriticality. In-vessel neutron detectors provide continuous indication of the core flux as each fuel assembly is placed into the reactor. A complete check is made of the fully loaded reactor core to assure that all fuel assemblies are properly installed, oriented, and in the pre-designated positions.

The predictions of core reactivity are prepared in advance to evaluate the measured response to specified loading increments. During and following the insertion of each fuel assembly, the response of the neutron detectors is observed and compared with predictions to verify that changes in core reactivity are as expected. Procedures are prepared and approved in advance to respond to unpredicted reactivity changes. Temporary neutron detectors may be used in the reactor vessel to provide additional reactivity monitoring.

14.2.10.2 Initial Criticality

When the initial fuel loading is completed, the reactor upper internals and the reactor vessel head are installed.

Mechanical and electrical test are performed in preparation for criticality and power operations.

The following conditions exist prior to initial criticality:

- The reactor coolant system (RCS) is filled and vented.
- The operation of the control rod drive mechanism (CRDM) is verified.
- Rod control and position indication systems are operational.
- Rod drop time under hot full flow and no flow conditions meet design requirements.
- The protection and safety monitoring system and plant control and monitoring system are operable.
- Reactor trip breakers are operable.
- The RCS is at hot no-load temperature and pressure.
- The reactor coolant boron concentration is adequate for the shutdown margin requirements of the Technical Specifications to be satisfied for the hot standby condition.
- Core conditions including rod position and boron concentration at criticality are predicted.
- RCS system leak rates are verified within the specified limits.
- All systems required for startup or protection of the plant are operable and in a state of readiness.

Initial criticality is achieved in an orderly, controlled fashion by the combination of shutdown and control bank withdrawal and RCS boron concentration reduction during the ITP.

When approaching initial criticality, the rate of reactivity addition and proximity to a critical condition is determined using source range nuclear instruments to assure that criticality is reached in a deliberate and orderly manner.

Rates for rod withdrawal and boron reduction is prescribed to prevent passing through criticality in a period shorter than approximately 30 seconds (less than one decade per minute).

14.2.10.3 Low Power and Power Ascension

Low power testing and power ascension testing to full licensed power are conducted in a controlled manner in accordance with specific written procedures as part of the startup test phase.

14.2.11.1 Major Phases of the Test Program

The major phases of the ITP are the preoperational testing, initial fuel loading, initial criticality, low power testing, and power ascension testing.

The definitions of the major phases of the ITP and the controls for progressing from one phase to the next, as well as the requirements for moving beyond the selected hold points or milestones within a given phase, are contained in ITP administrative procedures.

The power ascension testing plateaus consist of low power testing at less than 5% power, 30% power, 50% power, 75% power, and 100% power. Test abstracts are provided for the startup tests in Subsection 14.2.12.2.

14.2.11.2 Completion of Tests for Initial Fuel Loading

It may not be possible to complete one or more preoperational tests, the review of test results, or the final approval of test results prior to fuel loading. If the test completion is not required for fuel loading, it may be possible to delay the test. If this occurs, the NRC must approve the delay. To request permission, the NRC is notified and provided with a list of the tests, a list of sections of the tests for which the delay is being requested, and technical justification for the delay.

14.2.12 Individual Test Descriptions

A test abstract is a brief statement of the content of the test. Test abstracts are provided for preoperational tests and startup tests. Test abstracts listed in Table 14.2-1 are described in Subsection 14.2.12 and the conformance with RG 1.68 appendix A (Reference 14.2-10) is shown in the appendix 14A.

The COL applicant is responsible for the testing outside scope of the certified design in accordance with the test criteria described in Subsection 14.2.1. And testing of the following is required under the operational radiation protection program as described in Section 12.5.

- Personnel monitors and radiation survey instruments
- Laboratory equipment used to analyze or measure radiation levels and radioactivity concentrations

Table 14.2-1 Comprehensive Listing of Tests (Sheet 2 of 5)

Section	Test
14.2.12.1.42	Emergency Lighting System Preoperational Test
14.2.12.1.43	Normal Lighting System Preoperational Test
14.2.12.1.44	Class 1E Gas Turbine Generator Preoperational Test
14.2.12.1.45	Class 1E Bus Load Sequence Preoperational Test
14.2.12.1.46	Alternate ac Power Sources for Station Black Out Preoperational Test
14.2.12.1.47	125 V DC Class 1E Preoperational Test
14.2.12.1.48	125 V DC Class 1E Minimum Load Voltage Verification
14.2.12.1.49	125 V DC non-Class 1E Preoperational Test
14.2.12.1.50	Dynamic State Vibration Monitoring of Safety Related and High-Energy Piping
14.2.12.1.51	Steady State Vibration Monitoring of Safety Related and High-Energy Piping
14.2.12.1.52	Thermal Expansion Testing
14.2.12.1.53	Class 1E Gas Turbine Generator Sequence Preoperational Test - Loss of Offsite Power (LOOP) Sequence and LOOP Sequence with ECCS Actuation Signal
14.2.12.1.54	Safety Injection System (SIS) Preoperational Test
14.2.12.1.55	ECCS Actuation and Containment Isolation Logic Preoperational Test
14.2.12.1.56	Safety Injection Check Valve Preoperational Test
14.2.12.1.57	Safety Injection Accumulator Test
14.2.12.1.58	Containment Spray System Preoperational Test
14.2.12.1.59	Refueling Water Storage System Preoperational Test
14.2.12.1.60	Essential Chilled Water System Preoperational Test
14.2.12.1.61	Containment Structural Integrity Test
14.2.12.1.62	Containment Local Leak Rate Preoperational Test
14.2.12.1.63	Containment Integrated Leak Rate Test (ILRT) Preoperational Test
14.2.12.1.64	Containment Hydrogen Monitoring and Control System Preoperational Test
14.2.12.1.65	CRDM Cooling System Preoperational Test
14.2.12.1.66	Reactor Cavity Cooling System Preoperational Test
14.2.12.1.67	Containment High Volume Purge System Preoperational Test
14.2.12.1.68	Containment Low Volume Purge System Preoperational Test
14.2.12.1.69	Containment Fan Cooler System Preoperational Test
14.2.12.1.70	Annulus Emergency Exhaust System Preoperational Test
14.2.12.1.71	RCS Leak Rate Preoperational Test
14.2.12.1.72	Loose Parts Monitoring System Preoperational Test
14.2.12.1.73	Seismic Monitoring System Preoperational Test
14.2.12.1.74	Incore Instrumentation System Preoperational Test
14.2.12.1.75	Nuclear Instrumentation System Preoperational Test
14.2.12.1.76	Remote Shutdown Preoperational Test
14.2.12.1.77	Miscellaneous Leakage Detection System Preoperational Test
14.2.12.1.78	Process and Effluent Radiological Monitoring System, Area Radiation Monitoring System and Airborne Radioactivity Monitoring System Preoperational Test
14.2.12.1.79	High-Efficiency Particulate Air Filters and Charcoal ~~Absorbers~~ Adsorbers Preoperational Test

4. Required support systems are available.

5. The reactor internals and head are installed.

6. All systems and components required to support heatup, operation at normal operational temperature and pressure, and cooldown of the RCS are available.

7. The Class 1E gas turbine generators are operable and are ready for emergency power requirements.

8. Cold functional testing of all systems to be operated is complete.

9. RCS and secondary water chemistry are kept in compliance with Table 9.3.4-1 and Table10.3.5-3.

10. RCS temperature is maintained at 557°F.

Note: The maximum heatup rate and cooldown rate of RCS are 100°F per hour.

C. Test Method

1. The plant is taken from cold shutdown conditions to hot standby for the first time prior to placing nuclear fuel in the reactor core.

2. The required energy input for this operation is from operating reactor coolant pumps (RCPs) and the pressurizer heaters. The preoperational tests that require these hot and/or dynamic conditions are conducted during hot functional testing as coordinated by this procedure.

3. The capability to control the RCS under solid conditions (no pressurizer bubble) during both heatup and cooldown is demonstrated.

4. The temperature and pressure plateaus are used.

5. Provisions are in place to perform trial applications of plant operating procedures and to track recommended changes.

6. This test is used to coordinate the following preoperational tests:

   14.2.12.1.2 Pressurizer Pressure and Water Level Control Preoperational Test

   14.2.12.1.3 RCP Initial Operation Preoperational Test

   14.2.12.1.4 Pressurizer Safety Depressurization Valve (SDV) Preoperational Test

   14.2.12.1.5 Pressurizer Relief Tank Preoperational Test

   14.2.12.1.7 Reactor Internals Vibration Test

   14.2.12.1.13 CVCS Preoperational Test - Charging and Seal Water

14.2.12.1.14 CVCS Preoperational Test - Letdown

14.2.12.1.15 RCS Lithium Addition and Distribution Test

14.2.12.1.19 Resistance Temperature Detectors (RTDs)/Thermocouple Cross-Calibration Preoperational Test

14.2.12.1.21 Main Steam Supply System Preoperational Test

14.2.12.1.22 Residual Heat Removal System (RHRS) Preoperational Test

14.2.12.1.23 Main Steam Isolation Valve (MSIV), Main Feedwater Isolation Valve (MFIV) and Main Steam Check Valve Preoperational Test

14.2.12.1.25 Turbine-Driven Emergency Feedwater System Preoperational Test

14.2.12.1.50 Dynamic State Vibration Monitoring of Safety Related and High-Energy Piping

14.2.12.1.51 Steady State Vibration Monitoring of Safety Related and High-Energy Piping

14.2.12.1.52 Thermal Expansion Test

14.2.12.1.54 Safety Injection System (SIS) Preoperational Test

14.2.12.1.56 Safety Injection Check Valve Preoperational Test

14.2.12.1.66 Reactor Cavity Cooling System Preoperational Test

14.2.12.1.69 Containment Fan Cooler System Preoperational Test

14.2.12.1.71 RCS Leak Rate Preoperational Test

14.2.12.1.72 Loose Parts Monitoring System Preoperational Test

14.2.12.1.76 Remote Shutdown Preoperational Test

14.2.12.1.83 Steam Generator Blowdown System Preoperational Test

14.2.12.1.84 Sampling System Preoperational Test

14.2.12.1.87 Component Cooling Water System Preoperational Test

14.2.12.1.107 Pressurizer Heater and Spray Capability and Continuous Spray Flow Verification Test

D. Acceptance Criteria

2. Pressurizer pressure and water level are varied separately, and the pressure and water level alarm and control setpoints are verified.

3. Pressurizer continuous spray flow valve initial setting determination is made, and proper spray line temperatures are verified.

4. Pressurizer proportional heaters and backup heaters are operated and their interlocks demonstrated.

D. Acceptance Criteria

1. The pressurizer pressure and water level control systems automatically respond to an increase or decrease in pressurizer pressure and water level, and the pressure and water levels are stabilized (see Subsections 5.4.10.3.1 and 5.4.10.3.2, Subsections 7.7.1.1.5 and 7.7.1.1.7)

2. Pressurizer pressure and water level control system alarm and control functions are operational.

3. Pressurizer continuous spray flow valve initial settings are determined, and spray line temperatures are maintained within design specifications.

4. Pressurizer proportional heaters and backup heaters respond properly to an increase or decrease in pressurizer pressure and their control functions are operationally verified, including the heater cutoff circuit due to low-low pressurizer water level.

14.2.12.1.3 RCP Initial Operation Preoperational Test

A. Objectives

1. To measure and record system and operating parameters of the RCPs, including seal parameters in the cold condition.

2. To measure and record pump operating parameters, including seal parameters, during hot functional testing.

3. To verify the operation of the associated oil lift pumps.

B. Prerequisites

1. Required construction testing including oil spillage protection system and the seal leakoff is completed.

2. Component testing and instrument calibration including RCP frame vibration, RTD, seal injection flow and CCW flow is completed.

3. Test instrumentation is available and calibrated.

4. Required support systems are available.

5. The CVCS is available to provide seal water to the RCPs.

6. The component cooling water (CCW) system is available for cooling.

7. The RCS is filled, vented, and pressurized.

C. Test Method

1. The RCPs and associated oil lift pumps are operated in the cold condition, and operating data is recorded.

2. The RCPs and associated oil lift pumps are operated during hot functional testing, and operating data, including seal parameters and temperatures at the thermal barrier, motor, motor air cooler and oil coolers, are recorded at various temperature plateaus.

3. Alarms and Interlocks are verified.

D. Acceptance Criteria

1. Alarms and interlocks function as designed.

2. The RCP and pump seals operating characteristics are within design specifications as described in Subsection 5.4.1.

14.2.12.1.4 Pressurizer Safety Depressurization Valve (SDV) Preoperational Test

A. Objectives

1. To demonstrate operation and valve response times for ~~the~~ both pressurizer SDVs.

2. To demonstrate operation of the SDV isolation valves.

3. To demonstrate operation of the function to provide the RCS depressurization.

B. Prerequisites

1. Required construction testing is completed.

2. Component testing and instrument calibration is completed.

3. Test instrumentation is available and calibrated.

4. Required support systems are available.

C. Test Method

1. Each SDV is operated and the response time is determined.

2. SDV isolation valves are operated and their interlocks demonstrated.

3. The function to provide system depressurization is demonstrated properly. The operation of the SDVs is demonstrated in both cold and hot conditions.

D. Acceptance Criteria

1. SDV operating time is within design specifications for both SDVs.

2. SDV isolation valves operate in accordance with the design specification.

14.2.12.1.5 Pressurizer Relief Tank Preoperational Test

A. Objectives

1. To demonstrate that design pressurizer relief tank spray flow can be obtained against design backpressure in the tank.

2. To demonstrate the filling and draining operation of the pressurizer relief tank.

3. To demonstrate the operation of system valve control circuitry.

4. To demonstrate that the pressurizer relief tank is capable of receiving a steam discharge.

B. Prerequisites

1. Required construction testing is completed.

2. Component testing and instrument calibration is completed.

3. Test instrumentation is available and calibrated.

4. Required support systems are available.

5. The containment vessel (C/V) reactor coolant drain tank part of the liquid waste management system is available to the pressurizer relief tank drain.

6. PMWS is available to supply water to the pressurizer relief tank.

7. The nitrogen gas subsystem in the gaseous waste management system is available to supply the pressurizer relief tank.

C. Test Method

1. With design backpressure in the pressurizer relief tank, the required spray flow is pumped to the pressurizer relief tank.

2. While draining the pressurizer relief tank, the nitrogen pressurization system operation is observed.

3. The control circuitry for system valves is verified.

DCD_14.02-29
DCD_14.02-33
DCD_14.02-34

4. Verify indications and alarms.

5. Verify the ability of the pressurizer relief tank to condense a steam discharge from the pressurizer. This test is performed in conjunction with Subsection 14.2.12.1.4, Pressurizer Safety Depressurization Valve (SDV) Preoperational Test.

D. Acceptance Criteria

1. The required spray flow is obtained as designed (see Subsection 5.4.11),

2. The pressurizer system properly pressurizes the pressurizer relief tank.

3. The system valves operate as designed.

4. Indications and alarms operate as described in Subsection 5.4.11.4.

5. The pressurizer relief tank functions per design.

14.2.12.1.6 RCS Preoperational Test

A. Objectives

1. To verify the control circuitry and operation of the head vent subsystem.

2. To verify the operability of ~~the~~ all 4 pressurizer safety valves at approximately operating temperature and pressure.

B. Prerequisite

1. Required construction testing is completed.

2. Component testing and instrument calibration is completed.

3. Test instrumentation is available and calibrated.

4. Required support systems are available.

C. Test Method

1. The control circuitry and operation of system valves are verified.

2. During a fill and vent of the RCS, the head vent is operated.

3. The operability of ~~the~~ all 4 pressurizer safety valves is demonstrated at approximately operating temperature and pressure or using applicable in –situ testing.

D. Acceptance Criteria

1. The valves respond to control signals (see Subsections 5.4.10 and 5.4.12.5).

2. ~~The~~ All four pressurizer safety valves actuate at the required pressure (See Table 5.4.10-3).

14.2.12.1.7 Reactor Internals Vibration Test

A. Objectives (1-3 is for first-plant-only testing)

1. To verify the structural integrity of reactor internals for flow-induced vibration.
2. To determine the margin of safety associated with steady-state and anticipated transient conditions for normal operation.
3. To confirm the results of the vibration analysis.
4. To confirm the sign of neither abnormal wear nor structural changes are observed.

B. Prerequisites (1 is for first-plant-only testing)

1. Special test instrumentation for vibration monitoring system and transducers are installed at the required locations.
2. RCS hot functional testing is in progress.
3. Test instrumentation is available and calibrated.

C. Test Method (1-3 is for first-plant-only testing)

1. Vibration measurements are made to verify the structural integrity of reactor internals for flow-induced vibration.
2. Vibration measurements are made to determine the margin of safety associated with steady-state and anticipated transient conditions for normal operation.
3. Comparison between test results and the predicting analyses results is performed.
4. Prior to the hot functional tests and after cooldown from the hot functional tests, the reactor vessel and internals are inspected and the results documented.

NOTE: Reactor internal vibration tests are coordinated with the reactor internals comprehensive vibration assessment program described in Subsection 3.9.2.4 and consistent with the requirements of RG 1.20 (Reference 14.2-13).

D. Acceptance Criteria (1 is for first-plant-only testing)

1. Alternating stress levels are acceptably low in comparison with the limit for high cycle fatigue in the ASME code.
2. No structural damage or change is observed in post-test inspections (see Subsection 3.9.2.6).

2. The rod control system operates as designed in response to interlock signals (Subsection 7.7.1.1.2 and Table 7.7-3).

3. The rod position indication system operates as designed to provide rod position indication and alarms (Subsection 7.7.1.1.4).

14.2.12.1.10 CRDM Motor-Generator Set Preoperational Test

A. Objectives

1. To demonstrate the operation of the CRDM motor-generator sets and system components, including the proper generator phasing for parallel operation.

2. To demonstrate the operation of the motor-generator set control system during motor-generator starting, running, and parallel operation including verification of interlock and alarm functions.

B. Prerequisites

1. Required construction testing is completed.

2. Component testing and instrument calibration is completed.

3. Test instrumentation is available and calibrated.

4. Required electrical power supplies are operational.

5. A three-phase load bank is available for motor-generator set testing under loaded conditions.

C. Test Method

1. CRDM motor-generator set and system component control circuits, including the interlock and alarm functions, are verified. This test includes the demonstration of the operation on simulated loss of power.

2. Generator phasing for parallel generator operation is verified.

3. Operation of the CRDM motor-generator sets and control system is verified during starting, running, and parallel operation.

D. Acceptance Criteria

1. Generator phasing is proper for parallel and synchronized motor-generator set operation ~~(see Subsection 7.7.1.3)~~.

2. The CRDM motor-generator sets and control system operate in accordance with the design requirements during starting, running, and parallel operation.

3. The motor-generator and control system alarms and interlocks function as designed.

14.2.12.1.11 CRDM Initial Timing Preoperational Test

A. Objective

1. To demonstrate CRDM current command timing, rod speed, and bank overlap logic operation.

B. Prerequisites

1. Required construction testing is completed.
2. Component testing and instrument calibration is completed.
3. Test instrumentation is available and calibrated.
4. Required electrical power supplies and control circuits are energized and operational.
5. The CRDM cooling system is in its normal operational alignment.

C. Test Method

1. CRDM withdrawal and insertion are simulated; and proper current command sequence, timing, and rod speed signals are verified.
2. Proper operation of the bank overlap logic to control rod bank sequence is verified.

D. Acceptance Criteria

1. The CRDMs operate as verified by current traces, to include digital data acquisition, showing current command sequence and timing and measurement of rod speed digital data (see Subsection 7.7.1.3).
2. The bank overlap logic operates to control rod movement and sequence.

14.2.12.1.12 Chemical and Volume Control System (CVCS) Preoperational Test - Boric Acid Blending

A. Objectives

1. To verify the operation of the boric acid transfer pumps and the ability of the boric acid blender to make up at design flowrates and boric acid concentrations to the CVCS in each mode of operation.
2. To verify the operation of system valves and control circuitry.
3. To verify the operability of heat tracing or area heating for portions of the system which normally contain 4 wt. % of boric acid solution.

B. Prerequisites

DCD_14.02-29

DCD_14.02-40

DCD_14.02-96

1. Required construction testing is completed.
2. Component testing and instrument calibration is completed.
3. Test instrumentation is available and calibrated.
4. Required support systems are available.
5. Auxiliary steam is available to heat the boric acid batching tank as required.
6. The PMWS is available to supply water to the boric acid blender.
7. Water with boron concentrations of approximately 7,000 ppm is available, when required.

C. Test Method

1. The boric acid transfer pumps and primary water pumps are operated, and performance characteristics are verified.
2. The control circuitry for system valves and motors is verified.
3. The makeup and blending system controls are demonstrated in auto makeup, dilute, alternate dilute, borate, and manual modes of operation.
4. Verify indications and alarms.
5. Demonstrate the operability of heat tracing or area heating for portions of the system which normally contain 4 wt. % of boric acid solution.

D. Acceptance Criteria

1. The boric acid transfer pump and primary makeup water pumps operating characteristics are within the design specifications (Subsection 9.3.4).
2. System valves and interlocks operate as designed.
3. The flowrates and boric acid concentrations associated with the blender are within the design specifications for each operating mode, auto makeup, dilute, alternate dilute, borate, and manual.
4. Indications and alarms operate as described in Subsection 9.3.4.5.
5. Heat tracing or area heating for portions of the system which normally contain 4 wt. % of boric acid solution operate as described in Subsection 9.3.4.2.3.1.

14.2.12.1.13 CVCS Preoperational Test - Charging and Seal Water

A. Objectives

1. To demonstrate the operation and verify the operating characteristics of the charging pumps.

2. To demonstrate the ability of the CVCS to supply adequate seal water injection flow to the RCPs.

3. To verify operation of the control circuitry of the charging pumps and system valves.

4. To demonstrate that the volume control tank water level and pressure control system operate as designed.

5. To demonstrate that the auxiliary spray cools the pressurizer during cooldown of the RCS.

B. Prerequisites

1. Required construction testing is completed.

2. Component testing and instrument calibration is completed.

3. Test instrumentation is available and calibrated.

4. Required support systems are available.

5. CCW is available to the centrifugal charging pump,

6. CCW is available for the RCP seal water heat exchanger.

7. Systems required to adequately supply cover gas and water to the volume control tank are operated.

8. Reactor head is removed for the initial charging pump testing

9. Auxiliary spray cooldown of the pressurizer is performed at the end of cooldown from hot functional testing.

C. Test Method

1. Charging pumps are operated and the performance characteristics of the charging pumps are verified.

2. The seal injection flow is measured to demonstrate proper operation.

3. The control circuitry of the charging pumps and system valves are verified.

4. Water levels and pressures in the volume control tank are varied and system response verified.

5. Verify indications and alarms.

D. Acceptance Criteria

1. The charging pumps operating characteristics are within design specifications as described in Subsection 9.3.4.

2. Seal water injection flow to each RCP is established in accordance with design specifications.

3. System valve and charging pump control circuits and interlocks operate as designed.

4. Auxiliary spray cooling of the pressurizer operates as designed during cooldown of the RCS.

5. The volume control tank water level and pressure control system operates as designed.

6. Indications and alarms operate as described in Subsection 9.3.4.5.

14.2.12.1.14 CVCS Preoperational Test - Letdown

A. Objectives

1. To verify the operation of the normal and excess letdown systems, including the branch line orifice sizing in the normal letdown system.

2. To verify the operation of the system valves and control circuitry.

3. To demonstrate the ability of the charging and letdown system to maintain RCS pressure control.

B. Prerequisites

1. Required construction testing is completed.

2. Component testing and instrument calibration is completed.

3. Test instrumentation is available and calibrated.

4. Required support systems are available.

5. The system test with the solid RCS is performed during cold conditions.

C. Test Methods

1. Control circuitry for system valves is verified in the cold conditions.

2. The charging and letdown system pressure control is demonstrated with the system solid by varying the charging and letdown flowrates and observing the system response in the cold condition.

3. The charging and letdown system pressure control is demonstrated by varying the charging and letdown flowrates and observing the system response in the hot condition.

4. The system performance characteristics are recorded, and the branch line orifice sizing (branch line flowrates) are verified.

5. Verify indications and alarms.

D. Acceptance Criteria

1. System valves and interlocks operate as designed.

2. System operating characteristics are within design specifications as described in Subsection 9.3.4.

3. The normal letdown branch line orifice sizing and branch line flowrates are within design specifications.

4. Indications and alarms operate as described in Subsection 9.3.4.5.

14.2.12.1.15 RCS Lithium Addition and Distribution Test

A. Objective

1. To verify correct and uniform lithium concentration of the RCS by addition of lithium, and confirm uniform concentration at each sampling point during hot functional test.

B. Prerequisites

1. Component testing and instrument calibration is completed.

2. Test instrumentation is available and calibrated.

3. Required support systems are available.

4. Charging pump and chemical mixing tank are available.

5. Hot functional test is in progress.

C. Test Method

NOTE: Boron addition is not required during hot functional testing.

1. Lithium (^{7}LiOH) is added in chemical mixing tank. The amount of lithium is to be added corresponds to the primary water chemical concentration. The increased lithium concentration will be approximately 1.0 ppm. The lithium is charged into the RCS by the charging pump.

2. At several sampling points (e.g., RCS loops, pressurizer liquid, and demineralizer inlet), each lithium concentration is measured until the lithium concentration is almost equal at each sampling point.

3. The RCS volume without fuel assembles is calculated from the amount of lithium to be added and the its lithium concentration. The quantity and concentration of injected lithium divided by increased concentration of lithium is used to estimate the RCS volume. This volume is reference data.

4. Following completion of hot functional testing, lithium is removed until it is approximately equal to the initial concentration (example: almost 0.5 ppm).

D. Acceptance Criteria~~on~~

1. ~~The maximum deviation of lithium concentration measurements is within limits (0.05ppm).~~The lithium concentrations from all sample points are within +/-0.05 ppm following analytical measurement with an accuracy of +/- 0.05 ppm or better.

2. Lithium mixing, charging to the RCS, and removal performs as described in Subsections 9.3.4.

14.2.12.1.16 Primary Makeup Water System (PMWS) Preoperational Test

A. Objective

1. To demonstrate the operation of the PMWS.

B. Prerequisites

1. Required construction testing is completed.

2. Component testing and instrument calibration is completed.

3. Test instrumentation is available and calibrated.

4. Required support systems are available, including the Demineralized Water Storage Tank (DWST) and the Demineralized Water Transfer Pumps.

C. Test Method

1. Verify manual and automatic system controls.

2. Verify system flowrates.

3. Verify indications and alarms.

D. Acceptance ~~Criterion~~Criteria

1. The PMWS operates as described in Subsection 9.2.6.

2. Indications and alarms operate as described in Subsections 9.2.6.5 and 9.3.4.5.5.6.

14.2.12.1.17 Reactor Trip System and ESF System Response Time Test

A. Objective

1. To demonstrate that the reactor trip system and ESF system response times are less than the maximum allowable response times as specified in the accident analysis.

B. Prerequisites

1. Required reactor protection system alignments, calibration, and testing are completed.

2. Required electrical power supplies and control circuits are energized and operational.

3. Special test circuitry test equipment and test instrumentation required for test performance are available.

4. The type test data for each primary sensor is obtained.

C. Test Method

1. The response times of each primary sensor associated with the reactor trip system and the ESF system will be obtained from either (1) historical records based on acceptable response time tests (hydraulic, noise, or power interrupt tests), (2) in place, onsite, or offsite (e.g., vendor) test measurements, or (3) utilizing vendor engineering specifications, as described in section B 3.3.1 of DCD Chapter 16 for SR 3.3.1.13 and SR 3.3.2.8.

~~1~~2. Reactor trip signal and ESF actuation signals are applied at the process sensor output, and the time interval is measured until loss of stationary gripper coil voltage and until the ESF equipment is capable of performing its safety function.

~~2~~3. Total reactor trip system and ESF system response time is computed by summing the results of the previous test method.

~~3~~4. Individual components and valve response times are accomplished in the system preoperational test procedures.

D. Acceptance Criterion

1. The total reactor trip system and total ESF system response times do not exceed the allowable response times calculated using the methodology described in MUAP-07004-P, “Safety I&C System Description and Design Process,” Subsection 6.5.3 (Reference 14.2-16), (see Section 7.2.2.7.2).

and safety monitoring system (PSMS) and for software maintenance and periodic testing, bit by bit.

2. Appropriate input signals are simulated and the proper operation of the representative reactor protection logic matrix is verified by observing the operation of the reactor trip breakers and/or undervoltage coils. The integrity of the entire reactor protection logic matrix is verified in C.1.

3. Appropriate input signals are simulated and the proper operation of the representative ESF system logic matrix is verified by observing the operation of the output signal in the ESF system. The integrity of the entire reactor protection logic matrix is verified in C.1.

4. Integrity of the reactor trip system block and permissive interlocks is verified in C.1.

5. Integrity of the setpoint, interlock, and alarm functions of the reactor trip system and the ESF system is verified in C.1.

6. Operation of the reactor trip breakers alarms is verified.

D. Acceptance Criteria

1. The results of Test Method C.1 for the reactor trip system and the ESF system are completely "Good~~.~~", which means there is no change to the internal PSMS software that would impact its functional operation or the continuous self-test function.

2. The reactor trip system and the ESF system operate as designed to initiate the appropriate reactor trip and ESF actuation signal.

3. The reactor trip breakers operate as designed to provide normal trip and alarm functions.

14.2.12.1.19 Resistance Temperature Detectors (RTDs)/Thermocouple Cross-Calibration Preoperational Test

A. Objectives

1. To collect data to verify expected resistance-versus-temperature characteristics of installed RTDs and millivolt-versus-temperature characteristics of thermocouples.

2. To determine RTD deviation from RCS average temperature for individual RTDs and isothermal corrections for individual thermocouples.

3. To demonstrate that temperature instrumentation is reading correctly after disconnecting special test instrumentation and reconnecting RTDs to normal plant terminations.

B. Prerequisites

1. The reactor upper internals are installed and thermocouple wiring is completed.

2. The temperature instruments are aligned in accordance with manufacturer's calibration data.

3. Hot functional testing is in progress.

4. The special test instrumentation required for test performance is available and calibrated.

5. The plant computer is operational to obtain thermocouple data in the trend mode while taking RTD readings.

C. Test Method

1. RTD resistance data is taken at specified temperatures during hot functional testing, and the RTD resistance versus temperature characteristics is verified.

2. Thermocouple data is taken at the same temperature points used for recording RTD data, and the thermocouple millivolt-versus-temperature characteristics is verified to be within design tolerances.

3. RTD deviation from RCS average temperature and isothermal corrections for individual thermocouples are determined from the recorded data. NOTE: Any individual RTD reading that differs from the calculated average temperature by the specified amount determined using the methodology referenced in Section 7.1 (which conforms to Branch Technical Position HICB7-13) is not used for average temperature calculations (see Subsection 7.7.1.1). This methodology conforms to Branch Technical Position 7-13.

4. After disconnecting special test instrumentation and reconnecting RTDs to normal plant terminations, temperature data are taken to verify that all temperature instruments are reading correctly and indicate approximately RCS average temperature, as a functional check.

D. Acceptance Criteria

1. Test data are recorded for future alignment purposes only, and specific acceptance criteria are not provided. ~~However, any individual RTD reading that differs from the calculated average temperature by the specified amount determined using the methodology referenced in Section 7.1 (which conforms to Branch Technical Position HICB-13) are not used for average temperature calculations (see Subsection 7.7.1.1).~~

~~2. All temperature instruments disconnected for measurement indicate approximately RCS average temperature when their RTDs are reconnected to normal plant terminations.~~

14.2.12.1.20 Diverse Actuation System (DAS) Actuation Test

A. Objectives

1. To demonstrate the capability of the DAS to perform the required logic and timing functions.

2. To demonstrate that the DAS produces the required output signals in response to specific input signals.

B. Prerequisite

1. The plant control and monitoring system is available to the extent necessary to provide the required input signals to the DAS.

C. Test Method

1. Internal DAS testing is accomplished to verify input, output, setpoint, timer, and logic functions.

2. Overall tests are accomplished to verify correct DAS output trip, and actuation signals are generated in response to specified input signal levels.

3. Verify indications and alarms.

D. Acceptance Criteria

1. The DAS processing system performed the required logic and timing functions.

2. The DAS produced the required output signals in response to specified input signals.

3. The DAS operates as described in Section 7.8.

4. Indications and alarms operate as described in Subsection 7.8.1.1.2.

14.2.12.1.21 Main Steam Supply System Preoperational Test

A. Objectives

1. To demonstrate the operability of the ~~power-operated atmospheric relief~~main steam depressurization valves ~~and~~, ~~motor-operated relief~~main steam relief valves and main steam relief valve block valves with steam lines at normal operating temperature and pressure.

2. To demonstrate the operability of the turbine bypass valves with steam lines at normal operating temperature and pressure.

3. To verify the setpoints of the main steam safety valves at temperature and pressure.

B. Prerequisites

1. Required construction testing is completed.
2. Component testing and instrument calibration is completed.
3. Test instrumentation is available and calibrated.
4. Required support systems are available.
5. Water quality is in required condition.
6. Main steam pressure is at required pressure.
7. SG water level is at required level.

C. Test Method

1. Verify manual and automatic system controls.
2. Verify alarms and status indications are functional.
3. Demonstrate dynamic operation of steam bypass to condenser during hot functional testing.
4. Demonstrate the operability of the main steam depressurization~~power-operated atmospheric relief~~ valves, ~~and~~ the main steam relief~~motor-operated relief~~ valves and the main steam relief valve block valves during hot functional testing.
5. Verify setpoints of the main steam safety valves at operating temperature and pressure or using applicable in-situ testing.

D. Acceptance Criteria

1. The opening and closing times of the relief valves are within the design specifications.
2. The main steam supply system operates as described in Subsection 10.3.2
3. Setpoints of main steam are within required limits as specified in Subsection 10.3.2.

14.2.12.1.22 Residual Heat Removal System (RHRS) Preoperational Test

A. Objectives

1. To demonstrate operation of the containment spray (CS)/RHRS pumps and RHRS valves and their associated control and interlock circuitry.

D. Acceptance Criteria

1. RHRS components respond properly to normal control and interlock signals (see Subsection 5.4.7).

2. CS/RHRS pump and RHRS performance characteristics are within design specifications.

3. RHRS functions as designed during RCS heatup and cooldown.

4. Reactor coolant temperature can be cooled down with only two of four subsystems.

5. The RHRS functions as designed during RCS mid-loop hot leg water level.

6. The RHRS relief valve operation to provide low temperature overpressure protection for RCS is verified by in-service testing specified in subsection 3.9.6.

7. Indications and alarms operate as described in Subsection 5.4.7.2.5.

14.2.12.1.23 Main Steam Isolation Valve (MSIV), Main Feedwater Isolation Valve (MFIV) and Main Steam Check Valve Preoperational Test

A. Objectives

1. To demonstrate acceptable closing times of the MSIVs and the MSIV bypass valves.

2. To demonstrate acceptable closing times for the MFIVs.

3. To demonstrate failure position of MSIVs and MFIVs upon loss of valve motive force.

4. To demonstrate that the main steam check valve prevents blowdown by steam backflow for intact steam generator in the event of breaking the upstream of main steam check valve.

B. Prerequisites

1. Required construction testing is completed.

2. Component testing and instrument calibration is completed.

3. Test instrumentation is available and calibrated.

4. Required support system are available.

C. Test Method

1. The MSIV system's manual and automatic operation and MSIV and MSIV bypass valve closure times are demonstrated.

To verify that the as-installed components properly perform the functions of removing corrosion products, dissolved solids, and other impurities from the condensate system.

B. Prerequisites

1. Required construction testing is completed.
2. Component testing and instrument calibration is completed.
3. Test instrumentation is available and calibrated.
4. Required support systems are available.
5. Electrical power supplies and control circuits are operational.
6. The circulating water system is available.
7. The condensate system is operational.

C. Test Method

1. Condensate polishing system performance is observed and recorded during individual component and integrated system testing.
2. Calibration and operation of the system instrumentation, controls, actuation signals, and interlocks are verified.
3. Verify indications and alarms.

D. Acceptance ~~Criterion~~ Criteria

1. System valves, instrumentation, controls, actuation signals, and interlocks operate as described in Subsections 10.3.5.3 and 10.4.6.
2. Indications and alarms operate as described in Subsection 10.4.6.

14.2.12.1.32 Main Condenser Evacuation System Preoperational Test

A. Objective

1. To verify that the system components perform the functions to establish and maintain the required vacuum in the main condenser.

B. Prerequisites

1. Required construction testing is completed.
2. Component testing and instrument calibration is completed.
3. Test instrumentation is available and calibrated.

4. Required support systems are available.

5. The condensate system, instrument air system, circulating water, vacuum pump seal water cooler, gland sealing system, auxiliary steam supply system and turbine component cooling water system are available.

6. Turbine is on turning gear.

C. Test Method

1. Verify operation of the vacuum pumps and system valves.

2. Verify calibration and operation of the system instrumentation, controls, actuation signals, and interlocks.

3. Verify capability of the vacuum pumps to establish the required vacuum in the main condenser.

4. Verify indications and alarms.

D. Acceptance ~~Criterion~~Criteria

1. The main condenser evacuation system performs as described in Subsection 10.4.2.

2. Indications and alarms operate as described in Subsection 10.4.2.

14.2.12.1.33 Circulating Water System Preoperational Test

A. Objective

1. To demonstrate the operation of the circulating water pumps, the cooling tower fans and associated automatic operated valves.

B. Prerequisites

1. Required construction testing is completed.

2. Component testing and instrument calibration is completed.

3. Test instrumentation is available and calibrated.

4. Required support systems are available.

5. The cooling tower fans are available.

6. The following systems are available:

   a. Instrument and service air systems.

   b. Makeup water pump system.

c. Blowdown water system.

d. Demineralized water system.

C. Test Method

1. Verify controls and functions of circulating water pump and cooling tower fans.

2. Verify strokes and functions of motor-operated valves and control valves.

3. Operate circulating water pumps and verify operating condition.

4. Verify indications and alarms.

D. Acceptance ~~Criterion~~Criteria

1. The circulating water system performs as described in Subsection 10.4.5.

2. Indications and alarms operate as described in Subsection 10.4.5.

14.2.12.1.34 Essential Service Water System (ESWS) Preoperational Test

A. Objective

1. To demonstrate the operation of the ESWS.

B. Prerequisites

1. Required construction testing is completed.

2. Component testing and instrument calibration is completed.

3. Test instrumentation is available and calibrated.

4. Required support systems are available.

C. Test Method

1. Verify manual and automatic system controls.

2. Verify system flowrates and performance of ESWS pumps.

3. Verify alarms and status indications are functional.

D. Acceptance Criterion

1. The ESWS operates within design limits, as described in Subsection 9.2.1.

14.2.12.1.35 Main and Unit Auxiliary Transformers Preoperational Test

A. Objectives

2. Simulation of automatic fast transfer initiation signals is utilized to demonstrate automatic fast transfer scheme operability as applicable.

3. Buses are energized from their alternate supplies. Voltage, phase rotation, and phase angles are measured and recorded.

4. Verify indications and alarms.

D. Acceptance ~~Criterion~~Criteria

1. The 13.8 kV, 6.9 kV~~,~~ and 480 V~~, and instrument 120 V~~ ac systems (non-Class 1E) perform as described in Subsection 8.3.1.1.1~~.~~ and the non-Class 1E 120V AC I&C power system performs as described in Subsection 8.3.1.1.7.

2. Indications and alarms operate as described.

14.2.12.1.38 6.9 kV Class 1E System Preoperational Test

A. Objectives

1. To demonstrate the operation of normal (reserve auxiliary transformers) and alternate (unit auxiliary transformer) incoming supply breakers of 6.9 kV Class 1E buses.

2. To demonstrate that the buses and cables can be energized by the normal and alternate sources via these breakers.

3. To verify operation of interlocks (including trip, permissive, initiating), protective relaying, and the PSMS.

B. Prerequisites

1. Required construction acceptance testing is completed.

2. Component testing and instrument calibration is completed.

3. Test instrumentation is available and calibrated.

4. Required support systems are available.

5. Required electrical power supplies and control circuits are operational.

6. Actual service conditions of loads are simulated as closely as practical.

C. Test Method

1. Operate breaker from control points and verify operation of switches, indications, interlocks, and alarms

2. Simulate abnormal conditions and verify responses and alarms.

4. Required support systems are available.

5. Appropriate ac and dc power sources are available.

C. Test Method

1. Normal source inverters are energized from 125 V dc switchgear, and inverter input and output voltages are recorded.

   The 120 V, Class 1E, ac distribution panels are energized from normal source inverters, and ac distribution panel voltages are recorded.

2. Normal source inverters are energized from a 480 V MCC, and inverter input and output voltages are recorded.

   The 120 V, Class 1E, ac distribution panels are energized from normal source inverters, and ac distribution panel voltages are recorded.

3. The 120 V, Class 1E, ac distribution panels are energized from their backup source transformer by automatic and manual transfer and distribution panel voltages are recorded.

4. The system breakers are operated, and breaker interlocks are verified.

5. Verify indications and alarms.

D. Acceptance ~~Criterion~~Criteria

1. The 120 V, Class 1E, ac distribution panels perform as described in Subsections 8.3.1.1.2 and 8.3.1.1.6, and their operation is in conformance with the Chapter 16, Technical Specifications, SR 3.8.8.1 and SR 3.8.9.1.

2. Indications and alarms operate as described in Subsections 8.3.1.1.2 and 8.3.1.1.6.

14.2.12.1.42 Emergency Lighting System Preoperational Test

A. Objectives

1. To demonstrate the capability of the emergency lighting system to provide adequate illumination levels.

2. To verify operation of system instrumentation and controls.

B. Prerequisites

1. Required construction testing is completed.

2. Required electrical power supplies and control circuits are available.

3. The emergency lighting system is energized.

13. With each Class 1E gas turbine generator operating in the test mode connected to its bus, a simulated ECCS actuation signal is initiated to override the test mode and return the Class 1E gas turbine generator to standby operation.

14. Demonstrate that by starting and running (unloaded) redundant units simultaneously, common failure modes that may be undetected with a single Class 1E gas turbine generator testing do not occur.

D. Acceptance Criteria

1. The controls, alarms, interlocks, and operation of the emergency generator breakers and support systems are as designed (see Subsection 8.3.1.1.3).

2. Each Class 1E gas turbine generator completes 25 consecutive starts within the required time without a failure.

3. Each Class 1E gas turbine generator attains the required voltage and frequency upon starting.

4. Each Class 1E gas turbine generator is capable of being synchronized with offsite power and supplies the maximum expected load-carrying capability for an interval of not less than 1 hour.

5. The fuel oil consumption of each Class 1E gas turbine generator while operating under continuous rating load conditions does not exceed the design requirements, including fuel oil storage capacity as described in Subsection 9.5.4.1.

6. Upon the loss of the largest single load and complete loss of load, each Class 1E gas turbine generator continues to operate without exceeding the overspeed limit.

7. Each Class 1E gas turbine generator satisfactorily completes the full-load test for 24 hours with 22 hours at a load equivalent to the continuous rating of the Class 1E gas turbine generator and 2 hours at a load equivalent to the 2 hour rating of the Class 1E gas turbine generator.

8. Each Class 1E gas turbine generator starts and attains required voltage and frequency within the required time limits at full load temperature.

9. Each Class 1E gas turbine generator is synchronized with offsite power and restored to standby status.

10. On an ECCS actuation signal, specified automatic Class 1E gas turbine generator trips are automatically bypassed.

11. On a simulated ECCS actuation signal, with each Class 1E gas turbine generator operating in the test mode connected to its bus, the test mode is overridden and the Class 1E gas turbine generator returns to standby operation.

12. Each electrical division operates independently of other divisions.

13. The Fuel Oil System operates as described in Subsection 9.5.4.

14.2.12.1.45 Class 1E Bus Load Sequence Preoperational Test

A. Objectives

1. Verify the control logic and operation of bus undervoltage and degraded voltage relays.
2. Verify the control logic of the load shed, prohibit interlock and load control.
3. To demonstrate above functions in offsite power available condition.
4. Verify each electrical division operates independently of other divisions.

B. Prerequisites

1. Required construction testing is completed.
2. Component testing and instrument calibration is completed.
3. Test instrumentation is available and calibrated.
4. Required support systems are available.
5. Required electrical power supplies are available.

C. Test Method

1. The load control logic is verified by simulating a LOOP and by simulating an ESF initiation and recording the response.
2. The logic for the bus undervoltage and degraded voltage relays is verified.
3. In offsite source available condition, load sequence is tested by initiating an ECCS actuation signal.
4. Each electrical division is operated independently of other divisions and division separation is verified in accordance with RG 1.41.
5. Verify all associated indications and alarms during test sequences.

D. Acceptance Criteria

1. The PSMS, the bus undervoltage relays, and the degraded voltage relays operate in accordance with design (see Subsection 8.3.1.1.3).
2. The loading intervals for supplying from Class 1E gas turbine generator are within the design limits.

3. Each train loads are sequenced on the bus by initiating of an ECCS actuation signal.

4. Each electrical division operates independently of other divisions.

5. All associated indications and alarms operate per design.

14.2.12.1.46 Alternate ac Power Sources for Station Black Out Preoperational Test

A. Objectives

1. Demonstrate the operability of each alternate ac power source breaker and associated interlocks.

2. Demonstrate the operation of air start and fuel systems.

3. Demonstrate the ability of the alternate ac power source to synchronize with the offsite power system.

4. Determine the fuel oil consumption of each alternate ac power source while operating under continuous rating load conditions.

5. Verify that, with the alternate ac power source operating in the test mode connected to its bus, an automatic start signal overrides the test mode by returning the alternate ac power source to standby operation.

B. Prerequisites

1. Required construction acceptance tests are completed.

2. Required electrical power supplies and control circuits are operational.

3. The alternate ac power source fuel oil system is available.

4. Adequate ventilation for the alternate ac power source area is available.

C. Test Method

1. Fuel oil is transferred from the fuel oil storage tank to the fuel oil day tanks by means of the transfer pumps. Appropriate flow parameters are recorded.

2. The control logic of the alternate ac power source breaker, alternate ac power source start circuit, and support pumps and valves are verified.

3. The operability of the alternate ac power source starter is verified.

4. The alternate ac power source is started, voltage and frequency control demonstrated, phase rotation verified, and the backup generator synchronized to offsite power and loads.

5. During the testing, fuel oil consumption is monitored with the alternate ac power source operating at the continuous load rating.

6. With a simulated LOOP signal, the proper alternate ac power source trips is verified.

7. With the alternate ac power source connected to its bus, an automatic start signal causes it to return to standby operation.

8. Verify all associated indications and alarms during test sequences.

D. Acceptance Criteria

1. The controls, interlocks, and operation of the alternate ac power source breakers and support systems operate as designed (see Subsection 8.3.1.1.1).

2. Each alternate ac power source can be synchronized with offsite power.

3. Upon the receipt of automatic start signals, the alternate ac power sources operate as designed.

4. The alternate ac power source fuel oil consumption does not exceed the design requirements.

5. All associated indications and alarms operate per design.

14.2.12.1.47 125 V dc Class 1E Preoperational Test

A. Objectives

1. To demonstrate the battery capacity and to verify actual total load current is within the load assumed in the system design.

2. To demonstrate the capability of the batteries to supply the required loads via breakers, cables and inverters for the required period of time.

3. To demonstrate the ability of the battery chargers to carry the load via breakers, cables and inverters.

4. To demonstrate the ability of the battery chargers to recharge the battery in the required time period, while carrying the largest combined continuous steady state load expected on the dc system.

5. To demonstrate proper calibration and trip setting of protective relays and proper transfer function (including permissive and prohibit interlocks).

6. Verify each electrical division operates independently of other divisions.

7. Verify each battery voltage following discharge test at full load and for design duration.

B. Prerequisites

1. Required construction testing is completed.
2. Component testing and instrument calibration is completed.
3. Test instrumentation is available and calibrated.
4. Required support systems are available.
5. Required electrical power supplies and control circuits are operational.
6. Required battery room ventilation is available.
7. Required resistive load devices are available.
8. Actual service conditions of loads are simulated as closely as practical.

C. Test Method

1. To determine capacity, each battery is discharged, using the eight hour rate, to its minimum design voltage limit.
2. The battery is charged to its fully charged condition, while the battery charger is simultaneously carrying the largest combined continuous steady-state load expected on that dc system.
3. Each battery is discharged using the required discharge rates and time periods.
4. The battery charger is subjected to its rated load for the required 8 hour period.
5. Each individual battery cell voltage is measured following the discharge test.
6. Simulate abnormal conditions and verify responses.
7. Each electrical division is operated independently of other divisions and division separation is verified in accordance with RG 1.41.
8. Verify all associated indications and alarms.

D. Acceptance Criteria

1. Battery capacity is at least 90% of the manufacturer's rating (see Subsection 8.3.2).
2. The battery charger can charge the battery to a fully charged condition following a design basis discharge within 24 hours while carrying the largest combined continuous steady state load expected on that dc system.
3. Each battery can carry the required load for eight hours without reaching its minimum discharged state.

4. The battery charger can carry nameplate rated load.

5. The battery voltage remains the above minimum voltage.

6. Class 1E 125 V dc system performs as described in Subsection 8.3.2.

7. Each electrical division operates independently of other divisions.

8. Indications and alarms operate as described in Subsection 8.3.2.1.1.

14.2.12.1.48 125 V dc Class 1E Minimum Load Voltage Verification

A. Objectives

1. To measure the voltage drops, at nominal battery voltage, to 125 V dc Class 1E inverters and power operated valves.

2. To determine the voltage which would be available at the 125 V dc Class 1E inverters and power operated valves if the batteries were discharged to the minimum voltage limit.

3. To verify that the voltage available to 125 V dc Class 1E inverters and power operated valves exceed the design minimum.

B. Prerequisites

1. Required construction testing is completed.

2. Component testing and instrument calibration is completed.

3. Test instrumentation is available and calibrated.

4. Required support systems are available.

5. The 125 V dc Class 1E inverters and power operated valves are operable.

6. Required load test devices are available.

C. Test Method

1. Each 125 V dc Class 1E inverter is loaded to its design capacity and the voltage drop from the battery to the inverter input measured.

2. Each 125 V dc Class 1E power-operated valve is operated and the voltage drop from the battery to the motor or solenoid measured.

3. The minimum available voltage at each 125 V dc Class 1E inverter and power operated valve is determined from the measured voltage drops and the battery minimum voltage limit.

D. Acceptance Criteria

DCD_14.02-56

DCD_14.02-57

DCD_14.02-97

14.2.12.1.50 Dynamic State Vibration Monitoring of Safety Related and High-Energy Piping

A. Objective

1. To demonstrate during preoperational test ~~specified~~ transients that the systems'~~s~~ monitored parts respond in accordance with design calculations.

B. Prerequisites

1. Reference points for measurement of the systems are established, and required temporary instrumentation is installed and calibrated.

2. Hot functional testing is in progress for those portions of testing requiring elevated temperatures and pressure.

3. All subject systems are available for the specified dynamic operations.

C. Test Method

1. The dynamic response of the specified safety-related and high-energy piping is recorded during both steady flow and flow-induced transients.~~Deflection measurements are recorded during various plant transients.~~

2. Specified-safety-related and high-energy piping are screened qualitatively for perceptible vibration by visual inspection during the transient events. Where excessive vibration is observed, deflection amplitudes are recorded for evaluation.

3. Dynamic response monitoring is performed in conjunction with preoperational test 14.2.12.1.24 and during hot functional testing per Subsection 14.2.12.1.1 and the tests coordinated by Subsection 14.2.12.1.1.

D. Acceptance Criteria

1. The movements due to flow-induced loads do not exceed design limits (Subsection 3.9.2).

2. Flow-induced movements and loads do not cause malfunctions of plant equipment or instrumentation.

14.2.12.1.51 Steady State Vibration Monitoring of Safety Related and High-Energy Piping

A. Objective

1. Demonstrate that the steady state vibrations of safety-related and high-energy piping are within acceptable limits.

B. Prerequisites

1. The subject systems are available for operation at the specified conditions.

2. Portable instrumentation is available and calibrated.

C. Test Method

1. Specified safety-related and high-energy piping runs are screened qualitatively for perceptible vibration by visual inspection.

2. All piping observed to be vibrating is monitored with portable instrumentation. The results are assessed versus quantitative screening criteria or, if necessary, using standard stress evaluation techniques.

D. Acceptance Criterion

1. Steady state vibrations of safety-related and high energy piping are within the allowable stress limits defined in Subsection 3.9.2.

14.2.12.1.52 Thermal Expansion Test

A. Objectives

1. To verify that essential nuclear steam supply system and balance of plant components, piping, support, and restraint deflections are unobstructed and within design specifications.

2. To verify that thermal movements for safety-related snubbers, as delineated in the Technical Specifications and whose system operation temperature exceeds the design temperature, are within design specifications.

B. Prerequisites

1. This test is conducted simultaneously with hot functional testing. Objectives that cannot be verified during hot functional testing are completed during startup testing.

2. Supports, restraints, and hangers are installed, and reference points and predicted movements are established.

3. Temporary instrumentation is installed as required to monitor the expansion of the components under test.

4. A preservice examination is performed on snubbers.

C. Test Method

1. During the RCS heatup and cooldown, deflection data are recorded.

2. Snubber thermal movements are verified by recording positions during initial system heatup and cooldown. Local and/or remote displacement measurements

are recorded to determine thermal growth rates for snubbers utilized in safety-related systems or components that experience high thermal growth rates.

3. Snubber swing clearance is verified at specified heatup and cooldown intervals.

4. Thermal expansion is observed during power ascension.

D. Acceptance Criteria

1. No evidence of blocking of the thermal expansion of any piping or components, other than by installed supports, restraints, and hangers (Subsection 3.9.2).

2. Spring hanger movements remain within the hot and cold setpoints, and snubbers do not become fully retracted or extended.

3. Piping and components return to their approximate baseline cold position.

4. For snubbers utilized in safety-related systems or components that experience high thermal growth rates, the overall thermal growth rates are verified not to exceed the snubber lock-up velocity.

14.2.12.1.53 Class 1E Gas Turbine Generator Sequence Preoperational Test - LOOP Sequence and LOOP Sequence with ECCS Actuation Signal

A. Objectives

1. To demonstrate that the operation of the Class 1E gas turbine generators and the emergency loads supplied are in agreement with design assumptions.

2. To demonstrate proper automatic alignment and operation of ESF and other safety components using Class 1E gas turbine generators with voltage and frequency within acceptable limits~~the maximum and minimum design voltage~~. (LOOP sequence)

3. To demonstrate that the starting of Class 1E gas turbine generator by an ECCS actuation signal.

4. To demonstrate proper automatic alignment and operation of ESF and other safety components upon an ECCS actuation signal using Class 1E gas turbine generators with voltage and frequency within acceptable limits~~the maximum and minimum design voltage~~. (LOOP sequence with ECCS actuation signal.)

(Note) The ECCS actuation of the isolation valves and non-safety components and system valves in the SIS is verified in the ECCS Actuation and Containment Isolation Logic Preoperational Test (Subsection 14.2.12.1.55) and the Main Steam Isolation Valve (MSIV) and Main Feedwater Isolation Valve (MFIV) System Preoperational Test (Subsection 14.2.12.1.23).

B. Prerequisites

1. Required preoperational testing, component testing, and instrument calibrations are completed.

2. Required electrical power supplies and control circuits are energized and operational.

3. The refueling water storage pit (RWSP) contains an adequate supply of demineralized water.

4. The CS pump discharge lines are isolated to prevent spraying into the containment.

5. Plant systems and components to be operated during testing are aligned.

C. Test Method

1. A LOOP is simulated, loads are shed from the safety bus, and the Class 1E gas turbine generator starting and safety bus loading are verified.

2. Following initiation of a simulated LOOP, Class 1E gas turbine generator loading is checked to assure that the Class 1E gas turbine generator continuous operation ratings are not exceeded.

3. Initiate an ECCS actuation signal and verify each Class 1E gas turbine generator starts, attains the required voltage and frequency within acceptable limits and time, and operates on standby.

4. Following an ESF actuation signal coincident with a simulated LOOP, Class 1E gas turbine generator loading is checked to assure that the Class 1E gas turbine generator continuous operation ratings are not exceeded.

D. Acceptance Criteria

1. Operation of ~~T~~the Class 1E gas turbine generators and emergency loads supplied are in agreement with design assumptions.~~function as designed on a simulated LOOP including a simultaneous start of the redundant units, and safety bus loads are within the design limit.~~

2. ~~Each Class 1E gas turbine generator starts and operates on standby in response to an ECCS actuation signal.~~On a LOOP, proper automatic alighnment and operation of ESF and other safety components using Class 1E gas turbine generators is demonstrated, with voltage and frequency within acceptable limits. (LOOP sequence)

3. ~~The ESF and other safety components actuate in the proper sequence and automatically align in the proper manner (Subsections 7.3 and 8.3.1 and Table 8.3.1-4).~~The Class 1E gas turbine generators start on an ECCS actuation signal.

4. On an ECCS actuation signal coincident with a simulated LOOP, proper automatic alignment and operation of ESF and other safety components using

Class 1E gas turbine generators is demonstrated, with voltage and frequency within acceptable limits. (LOOP sequence with ECCS actuation signal)

14.2.12.1.54 Safety Injection System (SIS) Preoperational Test

A. Objectives

1. To verify the proper operation of the safety injection pumps and system valves and controls.

2. To verify that the head/flow characteristics of each safety injection pump is approximately the same.

3. To verify proper direct vessel injection and hot leg injection and conformity of test line with design requirements.

4. To verify flow test and valve operability for the SIS injection line at operating pressure and temperature conditions.

B. Prerequisites

1. Required construction testing is completed.

2. Component testing and instrument calibration is completed.

3. Test instrumentation is available and calibrated.

4. Required support systems are available.

5. The RWSP contains an adequate supply of demineralized water for test performance.

6. The reactor vessel head is removed and provisions are provided to remove water from the vessel.

C. Test Method

1. System component control and interlocks are verified.

2. The safety injection pump injection line and minimum flows and pump operation are verified.

3. During hot operating conditions, small amounts of water are injected into the reactor coolant system by the SIS (in accordance with RG 1.79).

D. Acceptance Criteria

1. SIS components respond properly to normal control and interlock signals as described in (Section 6.3 and Sections 7.3 and 7.6)

1. Valves and dampers are actuated and non safety-related equipment is tripped as designed upon initiation of safety signals and receipt of proper alarms as described in Subsections 6.2.4 and 6.3.5.1.

2. Valves and dampers close as designed upon actuation of containment isolation signals.

3. Valves and dampers close as specified in the design specifications.

14.2.12.1.56 Safety Injection Check Valve Preoperational Test

A. Objectives

1. To verify proper operation of safety injection line check valves.

2. To verify the integrity of accumulator discharge check valves and safety injection pump discharge line check valves.

B. Prerequisites

1. Required construction testing is completed.

2. Component testing and instrument calibration is completed.

3. Test instrumentation is available and calibrated.

4. Required support systems are available.

5. Required electrical power sources and controls are energized and operational.

6. RCS pressure and temperature are established near the no-load operating values.

C. Test Method

1. RCS pressure is reduced and safety injection pump flow is routed through the reactor vessel or hot leg and the correct accumulator discharge check valve and injection line check valve operation to confirm delivery of the water are verified.

2. Accumulator motor-operated isolation valves are opened and RCS pressure and temperature are reduced to the accumulator discharge conditions to verify the operability of each accumulator discharge check valve~~s~~ as indicated by a decrease in the fluid level of each accumulator.

3. SIS test line valves are aligned to provide a leakoff path from the accumulator discharge check valves and the safety injection pump injection line check valves (downstream of the applicable check valve) to verify proper operation of the check valves.

D. Acceptance Criteria

1. The accumulator discharge and injection line check valves operate as demonstrated by verification of flow through the check valves as described Subsections 6.3.2.2.1 and 6.3.2.2.2.

2. Check valve integrity test results conform to Chapter 16 Technical Specification requirements, Surveillance Test SR 3.4.14.1.

14.2.12.1.57 Safety Injection Accumulator Test

A. Objectives

1. To demonstrate operation of the safety injection accumulators and system valves and their associated control circuitry.

2. To demonstrate accumulator injection and obtain flow rate data during a low-pressure injection for each accumulator.

3. To verify flow and verify valve operability for the accumulator injection line at operating pressure and temperature conditions.

B. Prerequisites

1. Required construction testing is completed.

2. Component testing and instrument calibration is completed.

3. Test instrumentation is available and calibrated.

4. Required support systems are available.

5. Required electrical power supplies and control circuits are energized and operational.

6. The reactor vessel head and reactor internals are removed, and provisions are provided to remove water from the vessel during the low pressure injection test.

7. The high pressure nitrogen supply is available to supply nitrogen to the accumulators.

8. The RWSP contains an adequate supply of demineralized water for the performance of this test.

9. The SIS is available for filling the accumulators.

C. Test Method

1. Accumulator system component pressure control circuits are verified.

2. Each accumulator is filled and partially pressurized with the discharge valves closed. The discharge valves are opened, discharging the accumulators to the reactor vessel, and accumulator flow rate data are determined.

3. Each accumulator discharge valve is operated under maximum differential pressure conditions of normal accumulator precharge pressure and zero reactor coolant pressure with normal and emergency power conditions.

4. During hot operating conditions, small amounts of water are injected into the reactor coolant system by the accumulator (in accordance with RG 1.79).

D. Acceptance Criteria

1. The pressure is controlled properly as designed.

2. The discharge performance is as specified in design specifications (Subsections 6.3.1.1 and 6.3.2.2).

3. The valve operation initiated by the safety injection and containment isolation signal is verified as specified in ECCS Actuation and Containment Isolation Logic Preoperational Test, Subsection 14.2.12.1.55.

14.2.12.1.58 Containment Spray System Preoperational Test

A. Objectives

1. To demonstrate that the spray nozzles in the CS headers are free from obstructions.

2. To demonstrate operation of the CS/RHRS pumps, CS system valves and their associated control circuitry.

3. To demonstrate CS/RHRS pumps and CS system performance during operation in the test mode.

4. To demonstrate proper operation of the CS header check valve.

5. To demonstrate an unobstructed path of the sodium tetraborate decahydrate (NaTB) solution transfer piping from the NaTB basket container to the RWSP.

6. To verify proper operation of the CS/RHR pump hot leg isolation valve open permissive interlocks and the CS/RHR valve open block interlocks.

B. Prerequisites

1. Required construction testing is completed.

2. Component testing and instrument calibration is completed.

3. Test instrumentation is available and calibrated.

4. Required support systems are available.

5. Required electrical power supplies and control circuits are energized and operational.

6. The RWSP contains an adequate supply of demineralized water for the performance of this test.

7. Temporary piping is installed from the spray header test connections.

8. A source of compressed air is available to pressurize the spray headers.

9. The CCW system is available to supply cooling water to the CS pump motors.

C. Test Method

1. System component control circuits are verified.

2. CS/RHRS pumps and CS system performance characteristics are verified during operation in the test mode.

3. Airflow is initiated through the CS headers, and unobstructed flow is verified through each nozzle.

4. Use visual or alternate means to demonstrate unobstructed flow from each container to the RWSP.

5. The CS/RHR pump hot leg isolation valve open permissive interlocks described in Subsection 7.6.1.1 and the CS/RHR valve open block interlocks described in Subsection 7.6.1.2 are demonstrated.

D. Acceptance Criteria

1. CS system components respond to normal control signals and to simulated CS actuation load, load shed, and load sequencing signals as described in Subsection 6.2.2.2.

2. CS/RHRS pumps and CS system performance characteristics are within design specifications as described in Subsection 6.2.2.2.

3. All CS nozzles are unobstructed, as evidenced by air passing through each nozzle.

4. The CS header discharge check valves operate as designed.

5. The flow path from each container to the RWSP is unobstructed.

6. The CS/RHR pump hot leg isolation valve open permissive interlocks perform as described in Subsection 7.6.1.1, and the CS/RHR valve open block interlocks perform as described in Subsection 7.6.1.2.

14.2.12.1.59 Refueling Water Storage System Preoperational Test

A. Objective

1. To demonstrate the operation of the refueling water storage system and its associated control circuitry.

B. Prerequisites

1. Required construction testing is completed.
2. Component testing and instrument calibration is completed.
3. Test instrumentation is available and calibrated.
4. Required support systems are available.
5. Required electrical power supplies and control circuitry are energized and operational.
6. The demineralized water system is available for filling the RWSP.

C. Test Method

1. System component control circuits and alarms are verified.

D. Acceptance Criterion

1. The RWSP system components and controls, including ~~temperature controls and~~ alarms operate as designed (see Subsections 6.2.2.2.5, 6.3.2.2.4 ~~and~~, 6.3.2.2.3, and 6.3.5.4).

14.2.12.1.60 Essential Chilled Water System Preoperational Test

A. Objective

1. To demonstrate the operation of the essential chilled water system during normal operations and upon receipt of an ECCS actuation signal.

B. Prerequisites

1. Required construction testing is completed.
2. Component testing and instrument calibration is completed.
3. Test instrumentation is available and calibrated.
4. Required support systems are available.
4. ESWS are available.

C. Test Method

1. Verify manual and automatic system controls.

2. Verify alarms and status indications are functional.

3. Verify system flowrates.

4. Verify system flow rates, pressures, and performance of all pumps.

5. Verify that essential chillers supply 40° F chilled water to the HVAC systems cooling coils.

6. Verify that operating essential chillers and pumps continue to run and the standby essential chillers and pumps start upon receipt of an ECCS actuation signal.

D. Acceptance ~~Criterion~~Criteria

1. The essential chilled water system operates as described in Subsection 9.2.7.

2. Controls, alarms and status indications perform as described in Subsection 9.2.7.5.1.

3. System flow rates, pressures, and performance of all pumps are within design specifications.

4. Essential chillers supply 40° F chilled water to the HVAC systems cooling coils.

5. Operating essential chillers and pumps continue to run and the standby essential chillers and pumps start upon receipt of an ECCS actuation signal.

14.2.12.1.61 Containment Structural Integrity Test

A. Objective

1. To demonstrate the structural integrity of the containment.

B. Prerequisites

1. Containment penetrations are installed, and penetration leak tests are completed.

2. Containment penetrations, including equipment and personnel airlocks, are closed.

C. Test Method

1. The containment is pressurized to the test pressure of 78.2 psig as described in Subsection 3.8.1.3.1, using the test methods described in Subsection 3.8.1.7, and the deflection measurements, and concrete crack inspections are made to determine that the actual structural response is within the limits predicted by the design analyses.

D. Acceptance Criterion

1. Required construction testing is completed.
2. Component testing and instrument calibration is completed.
3. Test instrumentation is available and calibrated.
4. Required support systems are available.

C. Test Method

1. Simulate start and interlock signals for each cooling fan and verify operation and annunciation.
2. Simulate high vibration signals and verify alarm annunciation.
3. Verify design airflow.
4. During hot functional testing, monitor temperature between the reactor vessel support base plates and the concrete, and temperature of the primary shield wall.

D. Acceptance Criteria

1. Reactor cavity air cooling fans operate on the proper signals (see Subsection 9.4.6).
2. All high alarms annunciate to MCR properly.
3. During hot functional testing, the temperature between the reactor vessel support base plates and the concrete is maintained at or below 200° F.
4. During hot functional testing, the temperature of the primary shield wall is maintained at or below 150° F.

14.2.12.1.67 Containment High Volume Purge System Preoperational Test

A. Objective

1. To demonstrate operation of the containment high volume purge system.

B. Prerequisites

1. Required construction testing is completed.
2. Component testing and instrument calibration is completed.
3. Test instrumentation is available and calibrated.
4. Required support systems are available.
5. Replacement of HEPA filters and prefilters used during system construction is completed.

B. Prerequisites

1. Required construction testing is completed.
2. Component testing and instrument calibration is completed.
3. Test instrumentation is available and calibrated.
4. Required support systems are available.

C. Test Method

1. Verify manual and automatic controls.
2. Verify alarms and indications are functional.
3. Verify design airflow.
4. With the Containment Fan Cooler in operation, monitor containment air temperature during normal plant operation (three units in operation) and simulated LOOP conditions (two units in operation) during Hot Functional testing.

D. Acceptance ~~Criterion~~Criteria

1. The containment fan cooler system operates as described in Subsection 9.4.6.
2. Containment air temperature remains below 120° F during normal plant operation (three units in operation) and below 150° F during simulated LOOP conditions (two units in operation) during Hot Functional testing.

14.2.12.1.70 Annulus Emergency Exhaust System Preoperational Test

A. Objective

1. To demonstrate the capability to maintain a negative pressure in the annulus and safeguard component areas with respect to the surrounding area when the annulus emergency exhaust system operates upon an ECCS actuation signal.

B. Prerequisites

1. Required construction testing is completed.
2. Component testing and instrument calibration is completed.
3. Test instrumentation is available and calibrated.
4. Required support systems are available.

C. Test Method

1. Verify manual and automatic controls.

2. Verify operation of fans and dampers.

3. Verify alarms and status indications are functional.

4. Verify design airflow.

5. Demonstrate the capability of the annulus emergency exhaust system to maintain a negative pressure in the annulus and safeguard component area with respect to the surrounding areas.

D. Acceptance Criterion

1. The annulus emergency exhaust system operates as described in Subsection 6.5.1 and Subsection 9.4.5.

2. The system air flow meets design criteria.

3. The system can establish a -1/4 inch water gauge pressure in the penetration areas and safeguard component areas with respect to the surrounding areas within ~~180~~ 240 sec and maintain that pressure (Subsection 6.5.1).

14.2.12.1.71 RCS Leak Rate Preoperational Test

A. Objective

1. To determine during hot functional testing the ~~amount of identified and unidentified~~ leakage from the RCS and verify that the leakage is within allowable limits.

B. Prerequisites

1. Required construction testing is completed.

2. Component testing and instrument calibration is completed.

3. Test instrumentation is available and calibrated.

4. Required support systems are available.

5. RCS pressure and temperature are established near the no-load operating values for the determination of the amount of leakage.

C. Test Method

The ~~identified and unidentified~~ RCS leakage rates are determined by monitoring the following parameters in conjunction with quantitative leakage detection methods described in Subsection 5.2.5.4.1.1 through 5.2.5.4.1.4 over a specified period of time:

1. RCS pressure and temperature.

2. Component testing and instrument calibration is completed.

3. Test instrumentation is available and calibrated.

4. Required support systems are available.

5. The incore movable detector system installation is completed except for installation of the retractable guide thimbles.

6. Required electrical power supplies and control circuits are energized and operational.

7. A dummy cable is available for test performance.

C. Test Method

1. The functioning of the incore movable detector system control equipment drive assemblies and transfer devices is verified during operation in the various modes using a dummy cable.

2. Position indication and limit switch actuations are verified during test performance.

3. Verify indications and alarms.

D. Acceptance Criteria

1. The drive assemblies insert and withdraw the detectors in the proper paths and operate in the high and low speeds in the manual mode.

2. The drive assemblies operate in accordance with the design.

3. The safety and withdraw limit switches operate properly.

4. The leak detection system is capable of detecting a leak.

5. System limit switch setpoints are acceptable and in accordance with the manufacturer's instructions.

6. Indications and alarms operate as designed.

14.2.12.1.75 Nuclear Instrumentation System Preoperational Test

A. Objective

1. To demonstrate the operability of the nuclear instrumentation source, intermediate, and power range channels, including their ability to supply signals for operating the appropriate alarm and trip signals and indicating reactor power levels.

B. Prerequisites

1. The software installed in the nuclear instrumentation system is verified by the software verify check test and the results are completely "Good."

2. Nuclear instrumentation system installation, calibration, and alignments are completed.

3. Required electrical power supplies are energized and operational.

4. The nuclear instrumentation system has been energized long enough to stabilize.

C. Test Method

1. The ability of the source, intermediate, and power range nuclear instrumentation circuitry to respond to test signals is verified (see Sections 7.2 and 7.7.1.2).

2. The source, intermediate, and power range instrumentation setpoints are reviewed using the engineering tool.

3. Operation of the source range nuclear instrumentation audible count rate circuitry is verified.

4. Alarms and indications are verified.

D. Acceptance Criteria

1. The source, intermediate, and power range nuclear instrumentation circuitry responds properly to test signals.

2. The source, intermediate, and power range are within design specifications.

3. Alarms, indications and trip signals operate as designed.

14.2.12.1.76 Remote Shutdown Preoperational Test

A. Objective

1. To demonstrate the capability to cool down the plant from the hot standby condition to the cold shutdown condition using controls and instrumentation located outside the control room.

Note: Testing is conducted in accordance with RG 1.68.2.

B. Prerequisites

1. The controls and instrumentation associated with the remote shutdown console are available.

2. The RCS temperature above the RHRS cut-in temperature is maintained.

3. Approved operating procedures for performing a remote shutdown are available.

1. To demonstrate operation of the process and effluent radiological monitoring system as shown in Section 11.5, area radiation monitoring system and airborne radioactivity monitoring system as shown in Subsection 12.3.4.

B. Prerequisites

1. Required construction testing is completed.
2. Component testing and instrument calibration is completed.
3. Test instrumentation is available and calibrated.
4. Suitable check sources are available.

C. Test Method

1. The operation of each monitor is verified.
2. Setpoint, control logic, annunciation (e.g. high alarm of SFP area radiation monitor), and power failure alarms of each monitor is verified.

D. Acceptance Criterion

1. The process and effluent radiological monitoring system, area radiation monitoring system and airborne radioactivity monitoring system operate as described in Section 11.5 and Subsection 12.3.4.

14.2.12.1.79 High-Efficiency Particulate Air Filters and Charcoal ~~Absorbers~~ Adsorbers Preoperational Test

A. Objective

1. To demonstrate operation of the high-efficiency particulate air (HEPA) filters and charcoal ad~~b~~sorbers. This includes the MCR HVAC system, technical support center (TSC) HVAC system, annulus emergency exhaust system and containment purge system.

B. Prerequisites

1. Required construction testing is completed.
2. Component testing and instrument calibration is completed.
3. Test instrumentation is available and calibrated.
4. Required support systems are available.
5. The ventilation systems containing HEPA filters and charcoal ~~absorbers~~ adsorbers are air balanced and are operational and available to support this test.

6. Replacement of HEPA filters and adsorber material used during system construction is completed.

C. Test Method

1. HEPA filters and charcoal ~~absorbers~~ adsorbers are tested in place.

2. Verify design airflow.

3. Verify alarms and indications.

4. Testing shall be performed in accordance with RG 1.52 (Reference 14.2-26), RG 1.140 (Reference 14.2-25), ASME N510 (Reference 14.2-20) and ASME AG-1-1997 (Reference 14.2-27).

D. Acceptance Criteria

1. The HEPA filters and charcoal ~~absorbers~~ adsorbers perform and operate in accordance with RG 1.52 (Reference 14.2-26), RG 1.140 (Reference 14.2-25), ASME AG-1-1997 (Reference 14.2-27), ASME N509 (Reference 14.2-19) and ASME N510 (Reference 14.2-20) as described in Section 9.4.

2. System air flows meet the design specifications.

14.2.12.1.80 Liquid Waste Management System Preoperational Test

A. Objectives

1. To demonstrate the operation of the waste holdup tanks, waste holdup tank pumps, waste monitor tanks, waste monitor tank pump, detergent drain tank, detergent drain monitor tank and pump, chemical drain tank and pump, C/V reactor coolant drain tank (RCDT), and C/V RCDT pump.

2. To demonstrate the operation and verify the operating characteristics of the liquid waste management system, including pumps, valves, and tanks.

3. To demonstrate the operation of each building sump drains (i.e., containment, reactor, and auxiliary buildings) including sump tanks, pumps, and valves.

4. To demonstrate the ability of the containment cooler condensate measuring system to detect an increase in the amount of water collected by the system.

B. Prerequisites

1. Required construction testing is completed.

2. Component testing and instrument calibration is completed.

3. Test instrumentation is available and calibrated.

4. Required support systems are available.

5. The instrument air system is available to provide instrument air to the liquid waste management system instruments and control valves.

6. Required electrical power supplies and control circuits are energized and operational.

7. Demineralized water is available.

C. Test Method

1. The control circuitry and operation of system pumps and valves is verified.

2. The system is operated and performance characteristics verified.

3. A known amount of water is added to the containment coolers condensate measuring system and its detection and alarm ability is verified.

D. Acceptance Criteria

1. The performance characteristics of the system pumps are as designed (Section 11.2)

2. The pump and valve controls and interlocks operate as designed.

3. The containment and reactor and auxiliary buildings drain subsystems function as designed.

4. The containment coolers condensate measuring, detection, and alarm system meet the design criteria.

5. The Liquid Waste Management System operates as described in Section 11.2[神戸造船所1].

14.2.12.1.81 Gaseous Waste Management System Preoperational Test

A. Objectives

1. To demonstrate operation of the waste gas compressors, charcoal bed, waste gas dryer, and waste gas management system components and associated control and interlock circuitry.

2. To demonstrate waste gas compressor, charcoal delay bed, waste gas dryer, and waste gas management system performance.

B. Prerequisites

1. Required construction testing is completed.

2. Component testing and instrument calibration is completed.

3. Test instrumentation is available and calibrated.

3. Test instrumentation is available and calibrated.

4. Required support systems are available.

C. Test Method

1. Verify manual and automatic system controls, interlocks, alarms and indications.

2. Demonstrate the ability of the spent resin storage tanks (SRSTs) to receive spent resin from the LWMS, CVCS, SFPCS, SG blowdown system, and the condensate polisher ion exchange columns.

3. Demonstrate the ability of the SWMS to handle the following waste types, consistent with system operations described in Subsection 11.4.2: dry active waste, spent filter elements, spent resin, spent activated carbon, and oil and sludge.

D. Acceptance Criterion

1. The operation of the system meets design specifications (Section 11.4) including the capability to assure that the volume of free liquids in packaged wastes is within acceptable limits.

14.2.12.1.83 Steam Generator Blowdown System Preoperational Test

A. Objectives

1. To demonstrate that the SG blowdown system (SGBDS) accepts water from each SG blowdown line, processes the blowdown as required, and delivers the processed water to the condensate system.

2. To demonstrate the capability of the SG blowdown sampling system to collect blowdown liquid sample from each SG and the operation of the ~~SGBDS sample monitoring system~~SG blowdown sampling system including monitors, system valve and control circuits.

3. To demonstrate of the performance of laboratory equipment.

B. Prerequisites

1. Required construction testing is completed.

2. Component testing and instrument calibration is completed.

3. Test instrumentation is available and calibrated.

4. Required support systems are available.

5. CCW is available for cooling the sample stream and hot functional test is in progress.

6. The SGBDS to be sampled is at normal pressure and temperature.

7. The condenser or waste water system (WWS) or LWMS is available to receive discharge from the SG blowdown sampling system.

C. Test Method

1. Verify manual and automatic system controls.

2. Verify flowrates and temperatures.

3. Verify indications (flow, temperature and status), and alarms.

4. Verify system isolation using simulated signals.

5. Verify flowpaths.

6. Verify the flow rate and temperature during SG blowdown liquid samples are taken from each SG.

7. Verify the operation of control circuit and operability of the SG blowdown sampling system.

8. Verify the operation of laboratory equipment used to analyze or monitor SG blowdown water quality and radioactivity concentrations.

D. Acceptance ~~Criterion~~Criteria

1. The SGBDS operates as described in Subsection 10.4.8~~, Subsection 9.3.2.2, and~~ and Table ~~9.3.2~~10.3.5-~~5~~1.

2. The SG blowdown sampling system operates as described in Subsection 9.3.2.2 and Table 9.3.2-5.

14.2.12.1.84 Sampling System Preoperational Test

A. Objectives

1. To demonstrate the capability of the sampling system to collect liquid samples from the RCS and auxiliary systems and gaseous samples (including post-accident monitoring system) of the containment atmosphere.

2. To verify the operation of system valves and control circuitry.

3. To demonstrate the performance of laboratory equipment.

B. Prerequisites

1. Required construction testing is completed.

6. To verify the operability of sectionalizing devices and drains and to perform the leak test of sectionalizing devices and gaskets or bellows in the refueling canal and fuel storage pit.

B. Prerequisites

1. Required construction testing is completed.

2. Component testing and instrument calibration is completed.

3. Test instrumentation is available and calibrated.

4. Required support systems are available.

6. Required electrical power supplies and control circuits are energized and operational.

7. The RWSP or PMWS is available to provide fill water to the spent fuel pit.

8. The spent fuel pits gates are installed to keep the fuel transfer canal dry, the fuel transfer tube valve is closed, and construction tests are completed.

9. The spent fuel pits are filled to the normal water level with demineralized water.

C. Test Method

1. System component control circuits are verified.

2. The spent fuel pit pumps are operated in their various modes, and the pump and system performance characteristics are verified.

3. The ability to partially fill the spent fuel pit from the RWSP and PMWS is verified.

4. The SFPCS piping is altered to allow gravity draining of the spent fuel pit by siphon effect. Verify that the spent fuel pits can be drained until the minimum water level.

5. The sectionalizing devices and gaskets or bellows in the refueling canal and fuel storage pit are inspected.

6. Alarms and indications are verified.

D. Acceptance Criteria

1. The SFPCS components respond properly to control signals.

2. The spent fuel pit pumps and system performance characteristics are within design specifications (Subsection 9.1.3).

3. The spent fuel pit can be filled from either the RWSP or the PMWS.

4. The SFPCS siphon breaker design prevents draining the spent fuel pit below an acceptable minimum level.

5. Alarms and indications perform as designed.

14.2.12.1.86 Fuel Handling System Preoperational Test

A. Objectives

1. To demonstrate operation of the fuel handling system control circuits and associated interlocks.

2. To verify the ability of the refueling machine, new fuel elevator, fuel transfer system, fuel handling machine, spent fuel cask handling crane, and associated fuel handling tools to transfer a dummy fuel assembly.

3. To perform static load testing at 125% of rated load and operational (dynamic) ~~load testing using the dummy fuel assembly~~at 100% of rated load on the refueling machine, new fuel elevator, fuel handling machine, and spent fuel cask handling crane.

4. To perform operational load testing using the dummy fuel assembly.

B. Prerequisites

1. Required construction testing is completed.

2. Component testing and instrument calibration is completed.

3. Test instrumentation is available and calibrated.

4. A dummy fuel assembly and sufficient test weights are~~is~~ available.

C. Test Method

1. The refueling machine, new fuel elevator, fuel handling machine, and spent fuel cask handling building crane are static load tested at 125% of rated load, followed by an inspection.

2. A dummy fuel assembly is transferred from the new fuel pit to the refueling machine in the containment and back to the spent fuel pit to verify the operation of the fuel handling system.

3. Verify indications and alarms.

4. The refueling machine, new fuel elevator, fuel handling machine, and spent fuel cask handling building crane are dynamically load tested at 100% of rated load, followed by an inspection.

5. Spent fuel cask handling crane testing for handling of heavy loads includes test requirements specified by NUREG-0554 (Reference 14.2-24) and NUREG-0612 (Reference 14.2-21) as applicable.

6. The use and operation of fuel handling tools identified in Subsection 9.1.4.2.1 are demonstrated.

D. Acceptance Criteria

1. The fuel handling system interlocks and interlock bypasses perform in accordance with design specifications.

2. The fuel handling system is able to transfer a dummy fuel assembly in and out of containment in accordance with design specifications.

3. The refueling machine, new fuel elevator, and fuel handling machine~~, and spent fuel cask handling crane~~ can lift 125% of rated load and satisfactorily pass an inspection, ~~including visual, liquid penetrant and magnetic particle examination as applicable, in accordance with "Control of Heavy Loads at Nuclear Power Plants,: NUREG-0612, (Reference 14.2-21)~~ and can transfer the dummy fuel assembly ~~between the transfer cart and the reactor vessel~~ (Subsection 9.1.4). The spent fuel cask handling crane can lift 125% of rated load and satisfactorily pass an inspection, and can raise the new fuel shipping container from the receipt truck (the only potentially heavy load handling for new fuel receipt described in Subsection 9.1.4).

4. Indications and alarms operate as described in Subsection 9.1.4.5.

5. Refueling machine, new fuel elevator, and fuel handling machine testing demonstrates compliance with test requirements specified by ASME NOG-1 (Reference 14.2-30) and ASME B30.20-2006 (Reference 14.2-31) as applicable.

6. Spent fuel cask handling building crane testing demonstrates compliance with test requirements specified by NUREG-0554 (Reference 14.2-24), ASME NOG-1 (Reference 14.2-30) and NUREG-0612 (Reference 14.2-21) as applicable.

7. Fuel handling tools perform their intended design function as identified in Subsection 9.1.4.2.1.

14.2.12.1.87 Component Cooling Water System Preoperational Test

A. Objectives

1. To verify the operation, interlock and alarm of CCW surge tank.

2. To demonstrate the capability of the CCW system to provide cooling water during normal operation, normal cooldown, and postulated loss-of-coolant accident (LOCA) modes of operation.

3. To verify operation of system valves and control circuitry.

4. To demonstrate the operation and verify the operating characteristics of the CCW pumps.

B. Prerequisites

1. Required construction testing is completed.
2. Component testing and instrument calibration is completed.
3. Test instrumentation is available and calibrated.
4. Required support systems are available.
5. Demineralized water is available for system makeup.
6. The CCW is aligned to cool the CCW motors.
7. The ESWS is available to CCW heat exchangers.

C. Test Method

1. The control circuitry of the CCW pumps, surge tanks, and valves is verified.
2. The CCW system pumps are operated, and performance characteristics verified.
3. System flows are balanced, as required, and then verified in each mode of operation.
4. The cooling ability of the CCW system is verified during RCS heatup and cooldown in conjunction with the RHRS during the hot functional test.

D. Acceptance Criteria

1. The tank alarms and interlocks operate as designed.
2. The performance characteristics of the CCW pumps are within design specifications (Subsection 9.2.2)
3. Components that are supplied with CCW receive flows that are within the design specifications in each of the operating modes.
4. The pump control and interlocks operate as designed.
5. CCW system performance characteristics are within design specifications.

14.2.12.1.88 Turbine Component Cooling Water System Preoperational Test

A. Objective

1. To verify that the system components perform their function of supplying adequate cooling water to the designated turbine building components, as described in Subsection 9.2.8.

B. Prerequisites

1. Required construction testing is completed.
2. Component testing and instrument calibration is completed.
3. Test instrumentation is available and calibrated.
4. Required support systems are available.
5. Electrical power supplies and control circuits are operational.
6. Components cooled by the system are operational and operating for verifying the heat exchanger capability.

C. Test Method

1. Turbine component cooling water system performance is observed and recorded during individual component and integrated system testing.
2. Operation of the system pumps and valves is verified.
3. Operation of the system instrumentation, controls, actuation signals, and interlocks is verified.
4. Verify indications and alarms.

D. Acceptance ~~Criterion~~Criteria

1. System pumps and valves operate as described in Subsection 9.2.8.
2. Indications and alarms operate as described in Subsection 9.2.8.

14.2.12.1.89 Secondary Side Chemical Injection System Preoperational Test

A. Objective

1. To verify the operability of the secondary side chemical injection systems.

B. Prerequisites

1. Required construction testing is completed.

2. Component testing and instrument calibration is completed.
3. Test instrumentation is available and calibrated.
4. Required support systems are available.
5. Required electrical power supplies and control circuits are operational.
6. The condensate and feedwater systems are available.

C. Test Method

1. The operating parameters of the chemical injection pumps are measured.
2. The mixing capability of the mixing pump is verified.
3. Verify indications and alarms.

D. Acceptance Criteria

1. Automatic valves operate as described in Subsection 10.4.10.
2. The automatic functions required to add chemicals perform as described in Subsection 10.4.10.
3. The mixing pump meets its design requirements.
4. Indications and alarms operate as described in Subsection 10.4.10.

14.2.12.1.90 Fire Protection System Preoperational Test

A. Objective

1. To demonstrate operation of the fire protection system, (water system and gaseous systems) in the turbine building, access control building, auxiliary building, C/V, reactor building, and power source buildings.

B. Prerequisites

1. Required construction testing is completed.
2. Component testing and instrument calibration is completed.
3. Test instrumentation is available and calibrated.
4. Required support systems are available.

C. Test Method

1. Demonstrate operation of the fire detection system.

2. Demonstrate the head and flow characteristics of the fire protection water supply system pumps and the operation of all auxiliaries.

3. Verify control logic of the fire protection water supply system pumps and auxiliaries.

4. Demonstrate flow paths of the fire protection water supply system.

5. Demonstrate operation of the fire alarm system.

6. Verify installation of fire extinguishers.

7. Verify operation of the gaseous fire protection systems.

D. Acceptance Criterion

1. The fire protection system operates as described in Subsection 9.5.1 and Appendix 9A.

14.2.12.1.91 Instrument Air System Preoperational Test

A. Objectives

1. To demonstrate operation of the instrument air system, including compressors, coolers, reservoirs, and dryers and associated controls.

2. To assure that the air supply equipment is able to maintain the quality of air supplied within design requirements.

3. To verify that the system responds appropriately to both normal operation of the plant and upset, faulted, or emergency conditions including increases in pressure due to component malfunction or failure, and to verify appropriate response of air-operated valves and other components during and following such upset, faulted or emergency conditions (e.g., fail open, fail closed, fail-as-is).

4. To demonstrate that operation of components requiring large quantities of air does not cause excessive instrument air system pressure transients.

~~Verification of safety-related containment isolation valve position on loss of pressure is described in Subsection 14.2.12.1.62.~~Tests are in accordance with RG 1.68.3 except for C.7.

B. Prerequisites

1. Required construction testing is completed.

2. Component testing and instrument calibration is completed.

3. Test instrumentation is available and calibrated.

4. Required support systems are available.

5. Required ac and dc power sources are available.

C. Test Method

1. Simulate pressure signals to verify alarms.

2. Operate instrument air system to verify operation while recording flow, pressure, and temperature.

   a. Air dryer units are tested for proper functioning, and the units are operated through at least one regeneration cycle. Air dryer testing includes verification of acceptable operation at maximum flow rates.

   b. The appropriate differential pressures and the proper operation of pressure switches, high and low-pressure alarms, safety and relief valves, bypass valves, and alarms and resets are verified.

   c. The operation of compressor unloaders, automatic and manual start and stop circuits of standby compressors, high, and low pressure alarms, pressure indications, and temperature indications are checked. Relief valve settings are verified.

   d. Compressors, aftercoolers, oil separator units, air receivers, and pressure-reducing stations are tested to verify proper operation according to system design.

3. Sample and analyze the air at the end of each feeder line using continuous flow techniques or by analyzing a discrete sample.

4. Simultaneously operate large users of instrument air and monitor the instrument air system pressures.

5. Loads that are a part of (or support the operation of) portions of the facility important to safety, which are identified as susceptible to changes in state or loss of operability upon increases in pressure due to component malfunction or failure are evaluated and tested as determined appropriate, without exceeding allowable component pressure ratings.

6. Test is performed to verify the fail-safe position of safety-related air-operated components for sudden loss of instrument air or gradual loss of pressure as described in Table 9.3.1-1.

D. Acceptance Criteria

1. The instrument air system performs as described in Subsection 9.3.1.

2. The Instrument air systems meets system design specifications relating to flow, pressure, and temperature of the product air. The total air demand at normal

steady-state conditions, including leakage from the system, is in accordance with design.

3. Air quality meets the requirements of American National Standards Institute (ANSI) / Instrumentation, Systems, and Automation Society (ISA) S73-1975, "Quality Standard for Instrument Air," (Reference 14.2-22) with respect to oil, water, and particulate matter contained in the product air.

4. Loads that are a part of (or support the operation of).portions of the facility important to safety respond to pressure transients in accordance with design.

5 Plant equipment designated by design to be supplied by the instrument air system is not being supplied by other compressed air supplies (such as station air) that may have less restrictive air quality requirements.

6. Operation of supplied loads is continued in response to credible failures that result in an increase in the supply system pressure.

7. Positions of safety-related air-operated components are same as shown in Table 9.3.1-1 for sudden loss of instrument air or gradual loss of pressure.

14.2.12.1.92 Station Service Air System Preoperational Test

A. Objective

1. To demonstrate operation of air compressors and air dryers.

B. Prerequisites

1. Required construction testing is completed.

2. Component testing and instrument calibration is completed.

3. Test instrumentation is available and calibrated.

4. Required support systems are available.

5. Turbine component cooling water system is available.

6. Appropriate ac and dc power sources are available.

C. Test Method

1. Simulate temperature and pressure signals to verify alarms.

2. Operate compressors to verify operation.

D. Acceptance Criterion

1. Compressors and air dryers perform as described in Subsection 9.3.1.

4. Operate dampers under simulated normal and emergency conditions and verify operation and indication.

D. Acceptance Criteria

1. Class 1E electrical room AHUs and battery room exhaust fans operate on the proper signals (see Subsection 9.4.5),

2. All alarms annunciate properly.

3. The automatic dampers operate properly in normal and emergency operation.

4. Battery room exhaust fan operation maintains the hydrogen concentration below 2% by volume in the battery room per Subsection 9.4.5.1.1.2.

14.2.12.1.99 Auxiliary Building HVAC System Preoperational Test

A. Objective

1. To demonstrate operation of the auxiliary building HVAC system.

B. Prerequisites

1. Required construction testing is completed.

2. Component testing and instrument calibration is completed.

3. Test instrumentation is available and calibrated.

4. Required support systems are available.

C. Test Method

1. Verify manual and automatic controls in the normal and shutdown modes.

2. Verify alarms and status indications are functional.

3. Verify design airflow.

4. Verify auxiliary building isolation on a simulated ECCS actuation signal.

D. Acceptance Criterion

1. The auxiliary building HVAC system operates as described in Subsection 9.4.3.

14.2.12.1.100 Main Steam/Feedwater Piping Area HVAC System Preoperational Test

A Objective

1. To demonstrate operation of the main steam/feedwater piping area HVAC system.

B. Prerequisites

1. Required construction testing is completed.
2. Component testing and instrument calibration is completed.
3. Test instrumentation is available and calibrated.
4. Required support systems are available.

C. Test Method

1. Verify manual and automatic controls in the normal operating mode.
2. Verify alarms and indications are functional.
3. Verify design airflow.

D. Acceptance Criterion

1. The main steam/feedwater piping area HVAC system operates as described in Subsection 9.4.3.

14.2.12.1.101 MCR HVAC System Preoperational Test (including MCR Habitability)

A. Objectives

1. To demonstrate operation of the MCR HVAC system in normal, isolation and emergency pressurization modes.
2. To verify that the system components perform their safety-related functions, including:
   a. Providing sufficient breathable quality air to the MCR
   b. Maintaining the MCR at positive pressure
3. To perform integrated control room envelope leak testing.

B. Prerequisites

1. Required construction testing is completed.
2. Component testing and instrument calibration is completed.
3. Test instrumentation is available and calibrated.
4. Required support systems are available.

5. The ventilation systems containing HEPA filters and charcoal absorbers are air balanced and are operational and available to support this test.

6. Class 1E electrical power and uninterruptible power supply systems are available.

7. MCR construction is completed and leak-tight barriers are in place.

8. Tornado depressurization protection dampers are calibrated.

C. Test Method

1. Verify manual and automatic controls.

2. Verify that alarms and indications are functional.

3. Performance of the MCR HVAC and habitability systems are observed and recorded during component and integrated system testing.

4. Verify design air flow.

5. The ability of the emergency air supply to maintain the MCR at the proper positive pressure is demonstrated.

6. ~~The ability of the emergency air supply to limit a~~Air inleakage to the MCR is verified in accordance with RG 1.196 (Reference 14.2-28) and ASTM E-741-00 (Reference 14.2-23).

7. Demonstrate automatic switching to isolation mode upon the receipt of the initiation signal.

8. Demonstrate automatic switching to pressurization mode upon the receipt of the MCR isolation signal.

9. Demonstrate Smoke Purge Operation mode.

10. Perform system and component testing in accordance with RG 1.52 (Reference 14.2-26).

11. Testing of high-efficiency particulate air filters and charcoal adsorbers performed per Subsection 14.2.12.1.79 is coordinated with this test.

12. Testing of prefilters, fans and fan motors, heaters, dampers, and ductwork is performed in accordance with RG 1.52 (Reference 14.2-26), and standards referenced by RG 1.52.

13. Ventilation zones adjacent to the control room envelope (CRE) are configured and balanced to preclude airflow toward CRE.

D. Acceptance Criteria

1. The AHUs ~~and~~, fans and dampers perform as described in Subsections 6.4.2 and 9.4.1.~~operate on the proper signals~~.

2. All indications and alarms operate as described in Subsection 9.4.1.5.~~annunciate properly.~~

3. The MCR HVAC system automatically switches to pressurization mode and establishes pressurization mode conditions upon the receipt of the MCR isolation signal in accordance with Subsections 6.4.2 and 9.4.1.2.2.1.~~A positive pressure is maintained in the MCR with respect to the surrounding area, including during accident conditions, as specified in Section 6.4.~~

4. The system maintains proper control room air quality.

5. The MCR tornado depressurization protection dampers operate as designed.

6. The ASTM E741 tests confirm total system leakage in the pressurization mode and air exchange rate in the pressurization mode in accordance with Subsection 6.4.2.3.~~The emergency air supply limits air inleakage to the MCR as specified in Subsection 6.4.~~

7. The MCR HVAC system automatically switches to isolation mode and establishes isolation mode conditions upon the receipt of the initiation signal in accordance with Subsections 6.4.2 and 9.4.1.2.2.2.

8. CRE is not directed airflow from ventilation zones adjacent to CRE.

14.2.12.1.102 Non-Class 1E Electrical Room HVAC System Preoperational Test

A. Objectives

1. To demonstrate operation of the non-Class 1E electrical room HVAC system.

B. Prerequisites

1. Required construction testing is completed.

2. Component testing and instrument calibration is completed.

3. Test instrumentation is available and calibrated.

4. Required support systems are available.

C. Test Method

1. Verify manual and automatic controls in the normal and emergency operating modes.

2. Verify alarms and indications are functional.

3. Verify design airflow.

DCD_14.03.07-3,
14.3.7.3.4-12
DCD_14.02-83
DCD_14.02-103

4. Demonstrate smoke purge operation mode.

D. Acceptance ~~Criterion~~Criteria

1. The non-Class 1E electrical room HVAC system operates as described in Subsection 9.4.3.

2. Battery Room Exhaust Fan operation maintains the hydrogen concentration below 2% by volume in the battery room per Subsection 9.4.3.1.2.2.

14.2.12.1.103 Technical Support Center HVAC System Preoperational Test

A. Objectives

1. To demonstrate operation of the TSC HVAC system.

B. Prerequisites

1. Required construction testing is completed.

2. Component testing and instrument calibration is completed.

3. Test instrumentation is available and calibrated.

4. Required support systems are available.

C. Test Method

1. Verify manual and automatic controls in the normal and emergency operating modes.

2. Verify alarms and indications are functional.

3. Verify design airflow.

4. Testing of high-efficiency particulate air filters and charcoal adsorbers performed per Subsection 14.2.12.1.79 is coordinated with this test.

5. Testing of the TSC HVAC system is performed in accordance with RG 1.140 (Reference 14.2-25), and standards referenced by RG 1.140.

D. Acceptance Criterion

1. The TSC HVAC system operates as described in Subsection 9.4.3.

14.2.12.1.104 Non-Essential Chilled Water System Preoperational Test

A. Objectives

1. To demonstrate operation of the non-essential chilled water system.

B. Prerequisites

1. Required construction testing is completed.
2. Component testing and instrument calibration is completed.
3. Test instrumentation is available and calibrated.
4. Required support systems are available.

C. Test Method

1. Verify manual and automatic system controls.
2. Verify alarms and indications are functional.
3. Verify system flowrates.

D. Acceptance Criterion

1. The non-essential chilled water system operates as described in Subsection 9.2.7.

14.2.12.1.105 Vessel Servicing Preoperational Test

A. Objectives

1. To demonstrate operation of the ~~reactor vessel head and internals lifting rigs, and the~~ polar crane, including the control circuits, limit devices, safety devices and interlocks, and the reactor vessel head and internals lifting rigs, associated equipment and accessories (e.g., slings and hooks, etc.).
2. To verify the polar crane and the reactor head and internals lifting rigs, and associated equipment and accessories, have completed static testing at 125% and operational testing (dynamic load testing) at 100% of rated load.

B. Prerequisites

1. Required construction testing is completed.
2. Component testing and instrument calibration is completed.
3. Test instrumentation is available and calibrated.
4. Required support systems are available.
5. The vessel servicing system is available to support testing.

C. Test Method

1. Verify control circuitry, limit devices, safety devices, and interlocks for the polar crane as described in Subsection 9.1.5.5.

2. ~~Verify~~ Perform static load testing at 125% of rated load for the polar crane, ~~and~~ reactor vessel head and internals lifting rigs, and associated equipment and accessories, ~~static and dynamic load testing~~ followed by ~~visual~~ appropriate inspections ~~are completed~~.

3. Perform operational (dynamic load) testing at 100% of rated load of the polar crane, reactor vessel head and internals lifting rigs, and associated equipment and accessories followed by appropriate inspections.

4. Testing and inspection includes testing and inspection requirements specified by NUREG-0554 (Reference 14.2-24), ASME NOG-1 (Reference 14.2-30), and NUREG-0612 (Reference 14.2-21) as applicable.

D. Acceptance Criteria

1. The polar crane and its associated interlocks, limit devices, safety devices and control circuits perform as specified in Subsection 9.1.5.

2. The polar crane static testing at 125% of rated load ~~is completed~~ and operational (dynamic load) testing at 100% of rated load is completed and the crane satisfactorily passes ~~an~~ inspections~~, including visual, liquid penetrant and magnetic particle examination as applicable,~~ in accordance with NUREG-0554 (Reference 14.2-24), ASME NOG-1 (Reference 14.2-30), and NUREG-0612, (Reference 14.2-21).

3. The reactor vessel head and internals lifting rigs and associated equipment and accessories satisfactorily pass an inspection~~, including visual, liquid penetrant and magnetic particle examination as applicable,~~ following static and operational (dynamic load) testing in accordance with NUREG-0612~~,~~ (Reference 14.2-21) and NUREG-0554 (Reference 14.2-24).

4. Testing and inspection demonstrates compliance with testing and inspection requirements specified by NUREG-0554 (Reference 14.2-24), ASME NOG-1 (Reference 14.2-30) and NUREG-0612 (Reference 14.2-21) as applicable.

14.2.12.1.106 Safety-Related Component Area HVAC System Preoperational Test

A. Objective

1. To demonstrate operation of the safety-related component area HVAC system.

B. Prerequisites

1. Required construction testing is completed.

2. Component testing and instrument calibration is completed.

3. Test instrumentation is available and calibrated.

4. Required support systems are available.

C. Test Method

1. Simulate interlock signals for each AHU and verify operation and annunciation.

2. Verify alarms and status indications are functional.

3. Verify design airflow.

D. Acceptance Criteria

1. Safety related component area HVAC system operates on the proper signals (see Subsection 9.4.5),

2. All alarms annunciate properly.

14.2.12.1.107 Pressurizer Heater and Spray Capability and Continuous Spray Flow Verification Test

A. Objectives

1. To establish the optimum continuous spray flowrate.

2. To determine the effectiveness of the pressurizer heaters and normal control spray.

3. To demonstrate the depressurization rate by turning off pressurizer heaters and by using auxiliary spray.

B. Prerequisites

1. The RCS is at no-load operating temperature and pressure.

2. RCPs are operating.

3. Pressurizer heaters are operable.

4. Preoperational test 14.2.12.1.2 is complete.

C. Test Method

1. While maintaining constant pressurizer water level, spray bypass valves are adjusted until a minimum flow is achieved which maintains the temperature difference between the spray line and the pressurizer within acceptable limits.

2. With the pressurizer spray valves closed, pressurizer heaters are energized, and the time to raise the pressurizer pressure a specified amount is recorded.

3. With the pressurizer heaters deenergized, both spray valves are fully closed, and the time to lower the pressurizer pressure a specified amount is recorded.

4. All RCPs except one are turned off, and the pressurizer heaters are turned off. The depressurization rate is observed with its effect on margin to saturation temperature.

5. The pressurizer heaters are reestablished and auxiliary spray is initiated; charging and steam flow are then varied to observe the effects on RCS depressurization.

6. Verify indications and alarms.

D. Acceptance Criteria

1. The spray bypass valves are throttled so that the minimum flow necessary to keep the spray line warm is achieved.

2. The pressurizer pressure response to the opening of the pressurizer spray valves and to the actuation of all pressurizer heaters is within the limits described in Subsection 5.4.10.3.

3. Indications and alarms operate as described in Subsection 5.4.10.3.

14.2.12.1.108 Non-Essential Service Water (non-ESW) System Preoperational Test

A. Objective

1. To demonstrate the operation of the non-ESW system.

B. Prerequisites

1. Required construction testing is completed.

2. Component testing and instrument calibration is completed.

3. Test instrumentation is available and calibrated.

4. Required support systems are available.

5. Motor-operated valve adjustment and operation check are completed.

6. Makeup for non-ESW system is completed prior to non-ESW pump operation.

C. Test Method

1. Verify manual and automatic system controls.

2. Verify system flowrates and performance of non-ESW pumps.

3. Verify alarms and status indications are functional.

4. Verify automatic self-cleaning for strainers.

D. Acceptance Criteria

1. The non-ESW system operates as described in Subsection 9.2.9.

2. Isolation valves and backwash valves perform as described in Subsection 9.2.9.

14.2.12.1.109 Condensate Storage Facilities System Preoperational Test

A. Objective

1. To demonstrate operation of the condensate storage facilities system.

B. Prerequisites

1. Required construction testing is completed.

2. Component testing and instrument calibration is completed.

3. Test instrumentation is available and calibrated.

4. Required support systems are available.

C. Test Method

1. Verify movement of automatic valves.

2. Verify manual and automatic controls and functions.

3. Operate demineralized water pump on recirculation line and verify operating condition.

4. Operate condensate transfer pump on recirculation line and verify operating condition.

5. Verify indications and alarms.

D. Acceptance ~~Criterion~~Criteria

1. The condensate storage facilities system operates as described in Subsection 9.2.6.

2. Indications and alarms operate as described in Subsection 9.2.6.

14.2.12.1.110 Turbine Building Area Ventilation System (General Mechanical Area) Preoperational Test

A. Objective

2. Verify status indications and alarms are functional.

3. Verify operating conditions of air handling unit.

4. Operate exhaust fans in battery room and verify operating condition.

D. Acceptance ~~Criterion~~Criteria

1. Turbine building area ventilation system (electric equipment area) operates as described in Subsection 9.4.4.

2. Indications and alarms operate as described in Subsection 9.4.4.

3. Battery Room Exhaust Fan operation maintains the hydrogen concentration below 2% by volume in the battery room per Subsection 9.4.4.1.2.

14.2.12.1.112 Reserved

14.2.12.1.113 Reserved

14.2.12.1.114 Reserved

14.2.12.1.115 RCPB Leak Detection Systems Preoperational Test

A. Objective

1. To verify operability of RCPB leak detection systems and adjust the alarm setpoints.

2. To demonstrate the function described in Subsection 5.2.5 with reference to RG 1.45.

B. Prerequisites

1. Component testing and instrument calibration has been completed.

2. Test instrumentation has been available and calibrated.

C. Test Method

1. Verify the calibration and alarm setpoints using simulated signals to each channel of RCPB leak detection systems.

2. Verify alarm functions.

3. Verify the automatic functions.

D. Acceptance Criteria

1. The RCPB Leak Detection systems operate as described in Sections 5.2.5.

2. The alarm setpoints are established.

14.2.12.2 Startup Tests

Startup testing is conducted in four phases:

(1) Initial fuel loading and precritical testing

(2) Initial criticality tests

(3) Low power tests (less than 5% power)

(4) Power ascension tests (from 5% to 100% of rated power)

14.2.12.2.1 Initial Fuel Loading and Pre-critical Tests

This subsection addresses the test abstracts during or following initial fuel loading.

14.2.12.2.1.1 RCS Sampling for Fuel Loading

A. Objective

1. To verify correct and uniform boron concentration in the RCS and directly connected auxiliary systems prior to fuel loading.

B. Prerequisites

1. Boric acid storage tanks, transfer pumps, and associated piping and equipment are available.

2. The RCS is filled with reactor grade water which is borated to the concentration specified in the initial fuel loading procedure.

C. Test Method

1. The RCS is filled and on recirculation to maintain a uniform boron concentration.

2. A sample is obtained at a depth of 15 feet from the reactor vessel flange surface. Also, samples are taken from the operating RHR loop, RWSP, boric acid tank, boric acid charging line and CVCS charging line.

3. These samples are analyzed to verify that there is a uniform boron concentration in the RCS.

D. Acceptance Criterion

1. The samples obtained from the designated sample points have a minimum boron concentration in accordance with Chapter 16 Technical Specifications.

~~14.2.12.2.1.4~~14.2.12.2.1.2 Fuel Loading Instrumentation and Neutron Source Requirements Test

A. Objectives

1. To verify alignment, calibration, and neutron response of the temporary fuel loading instrumentation prior to the start of fuel loading.

2. To verify the neutron response of the nuclear instrumentation system (NIS) source range channels prior to the start of fuel loading.

3. To verify the neutron response of the temporary and NIS source range instrumentation prior to resumption of fuel loading following any delay of 12 hours or more.

B. Prerequisites

1. Temporary fuel loading instrumentation package is available.

2. Preoperational testing of source range of NIS that is to be performed prior to fuel loading is completed.

3. Plant and temporary instrumentation are calibrated, and calibration data are available.

C. Test Method

1. A portable neutron source and pre-shipment equipment checkout data are used to verify proper alignment, calibration, and neutron response of the temporary fuel loading instrumentation and the NIS source range instrumentation.

2. A portable neutron source or movement of a source-bearing fuel element is used to produce the desired change in neutron level to verify the neutron response of the temporary fuel loading instrumentation and the NIS source range instrumentation prior to resumption of fuel loading, following any delay of eight hours or more.

3. A statistical evaluation of 10 observations for each channel may be performed to verify operability of the equipment in lieu of C.2 above.

D. Acceptance Criterion

1. Neutron instrumentation is operational and calibrated and indicates the appropriate change in count rate as the neutron level is varied.

~~14.2.12.2.1.1~~14.2.12.2.1.3 Initial Fuel Loading

A. Objectives

1. To establish the conditions under which the initial fuel loading is to be accomplished.

2. To accomplish initial fuel loading in a safe and orderly manner.

B. Prerequisites

15. The reactor coolant boron concentration is verified to be within the limits specified by the Technical Specifications.

16. Predictions of core reactivity are prepared in advance to aid in evaluating the measured responses to specified loading increments and shutdown margin.

C. Test Method

1. Fuel assemblies and other core inserted components (control rods, burnable poisons, and neutron sources) are inserted into the reactor vessel in accordance with the pre-specified and approved loading sequence.

2. Neutron count rate is monitored on temporary and permanent source range detectors throughout the fuel loading.

3. Check sheets are filled at pre-specified intervals in order to verify that the required conditions are met.

4. These actions are directly supervised by a senior licensed operator having no other concurrent duties, and the loading operation is conducted in strict accordance with detailed approved procedures.

5. Conditions that require the immediate suspension of fuel loading activities include the following:

- An unexplained increase of neutron multiplication factor during each subsequent fuel addition.
- A loss of communication between the control room and the fuel loading station.
- Conditions in Section 3.9 of the Technical Specifications with required actions to suspend core alterations (which includes requirements for operable source range detectors).
- Loss of RCS recirculation using at least one CS/RHR pump.
- Failure to maintain at least one path for boron addition to the RCS.

D. Acceptance Criterion

1. The core is loaded with assemblies in accordance with the pre-specified configuration which establishes the required shutdown margin without achieving criticality.

~~14.2.12.2.1.3~~14.2.12.2.1.4 Inverse Count Rate Ratio Monitoring for Fuel Loading

A. Objective

1. To verify sub-criticality during fuel loading. (This monitoring is performed in conjunction with the initial fuel loading.)

B. Prerequisites

1. Temporary and plant source range nuclear instrumentation has been operational for a minimum of 60 minutes to allow instruments to attain stable operating conditions.

2. The plant is prepared for initial fuel loading.

C. Test Method

1. Data from the temporary and permanent nuclear monitoring channels are used to assess the neutron multiplication factor during fuel loading operations.

D. Acceptance Criterion

1. No unexplained increase of neutron multiplication factor during each subsequent fuel addition.

~~14.2.12.2.1.2~~14.2.12.2.1.5 Precritical Test Sequence

A. Objective

1. To specify the sequence of events which constitute the pre-critical test program.

B. Prerequisite

1. Plant system conditions are established as required by the individual test instructions within this sequence.

2. SSCs required by Technical Specifications to support a specified operational mode shall be operational prior to the initiation of precritical testing.

C. Test Method

1. This instruction establishes the sequence for required testing after fuel loading, until the plant has completed all pre-critical testing and reached the hot standby condition.

D. Acceptance Criterion

1. Acceptance criteria are contained in the various individual tests conducted during this time.

~~14.2.12.2.1.5~~14.2.12.2.1.6 Rod Drop Time Measurement Test

A. Objective

1. To determine the rod drop time of each RCCA with the reactor under full-flow conditions and no-flow conditions during cold shutdown and hot standby (at normal operating temperature and pressure).

B. Prerequisites

1. Initial fuel loading is completed.

2. The NIS source range channels are in operation.

3. All rods are fully inserted.

4. This test is performed prior to initial criticality.

5. Reactor coolant boron concentration is not less than specified in the Technical Specifications.

C. Test Method

1. Withdraw each RCCA, interrupt the electrical power to the associated CRDM, measure, and record the rod drop time.

2. Perform a minimum of three additional drops for each control rod whose drop time falls outside the two-sigma limit, as determined from the drop times obtained for the hot test condition.

3. This test is performed for the full-flow and no-flow conditions in the RCS at cold shutdown and hot standby

D. Acceptance Criterion

1. The rod drop times are acceptable in accordance with Chapter 16, plant Technical Specifications, SR 3.1.4.3.

~~14.2.12.2.1.6~~14.2.12.2.1.7 CRDM Operational Test

A. Objective

1. To demonstrate the operation of the CRDM under both cold and hot plant conditions.

B. Prerequisites

1. The RCS is filled and vented at cold shutdown.

2. All rods are fully inserted.

3. The NIS source range channels are aligned and operable.

C. Test Method

1. With the reactor core installed and the reactor in the cold shutdown condition, confirm that the CRDMs supply operating signals to the CRDM stepping magnet coils.

2. Verify operation of all CRDMs under both cold and hot standby conditions. The CRDM magnet coil currents are recorded.

D. Acceptance Criterion

1. CRDM mis-stepping is not observed.

14.2.12.2.1.8 Rod Position Indication Test

A. Objective

1. To verify that the rod position indication system satisfactorily performs required indication and alarm functions for each individual rod and that each rod operates satisfactorily over its entire range of travel.

B. Prerequisites

1. Initial fuel loading is completed (this test is performed prior to initial criticality).

2. Source range channels are in operation.

3. The RCS is at no-load operating temperature and pressure.

4. At least one RCP in service with reactor coolant boron concentration not less than specified in the Technical Specifications for refueling shutdown.

C. Test Method

1. Rod banks are individually withdrawn from and reinserted into the core while recording control room position readout, and the group step counters.

D. Acceptance Criterion

1. The rod position indication system performs the required indication and alarm functions, as described in Subsection 7.7.1.4, and each rod operates over its entire range of travel.

~~14.2.12.2.1.7~~14.2.12.2.1.9 Rod Control System Test

A. Objective

1. To demonstrate that the rod control system performs the required control and indication functions just prior to initial criticality.

B. Prerequisites

1. Initial fuel loading is completed.

2. RCS is at no-load operating temperature and pressure under full-flow conditions.

3. The NIS source range channels are aligned and operable.

4. Rod position indication system is in operation.

5. Reactor coolant boron concentration is not less than specified in the Technical Specifications.

C. Test Method

1. With the reactor at no-load temperature and pressure, immediately prior to initial criticality, the operation of the rod control system in various modes is verified.

2. The operation of status indications is verified.

D. Acceptance Criteria

1. The rod control system withdraws and inserts each rod bank (see Subsection 7.7.1.3).

2. The rod position and indication system tracks each rod bank as it is being moved.

3. The control banks overlap system starts and stops rod movement at the designated bank positions.

~~14.2.12.2.1.9~~14.2.12.2.1.10 Reactor Protection System Test

A. Objectives

1. To verify that initial trip setpoint adjustments are made prior to initial unit startup and to specify which trip setpoint adjustments require readjustment during startup.

2. To obtain a record of all trip setpoints.

B. Prerequisites

1. Reactor trip instrumentation is aligned and calibrated.

2. Reactor trip instrumentation has been energized for a time sufficient to achieve stability.

C. Test Method

1. Trip setpoints are reviewed and documented prior to criticality.

2. During startup and test operations, specific setpoints noted for readjustment on the data sheets are readjusted and final setpoint values recorded.

D. Acceptance Criteria

1. Initial reactor trip setpoints are verified to be within design criteria and in conformance with or more conservative than values in Chapter 16 Technical Specifications, Section 3.3.1 and Table 3.3.1-1 (also see Section 7.2).

2. Setpoints readjusted during startup and testing are noted, and a final record of all setpoints is obtained.

~~14.2.12.2.1.10~~14.2.12.2.1.11 RCS Final Leak Test

A. Objective

1. To determine the ~~amount of identified and unidentified~~ leakage from the RCS and verify that the leakage is within allowable limits.

B. Prerequisite

1. Fuel loading is completed.

C. Test Method

The ~~identified and unidentified~~ RCS leakage rates are determined by monitoring the following parameters in conjunction with quantitative leakage detection methods described in Subsection 5.2.5.4.1.1 through 5.2.5.4.1.4 over a specified period of time:

1. RCS pressure and temperature.

2. Pressurizer water level, pressure, and temperature.

3. Volume control tank water level, pressure, and temperature.

4. Pressurizer relief tank and C/V reactor coolant drain tank water level, pressure, and temperature.

5. Primary makeup water flow and RCP seal water flow.

D. Acceptance Criteria

1. The amount of leakage from the RCS is within the limits specified in LCO 3.4.13 of Chapter 16.

14.2.12.2.1.12 Incore Detector Test

A. Objectives

1. To set up and demonstrate the operation of the incore instrumentation system.

2. To verify its adequacy for incore flux mapping.

B. Prerequisites

1. Reactor upper internals are installed, and the reactor vessel head is installed with the studs tensioned.

2. The initial fuel loading is completed.

1. To align ΔT and T_{avg} process instrumentation under isothermal conditions prior to criticality.

B. Prerequisites

1. All RCPs are operating.

2. The RCS average temperature is within ±2° F of the hot no-load average temperature.

C. Test Method

1. Align ΔT and T_{avg} according to test instructions at isothermal conditions.

D. Acceptance Criteria

1. The T_{avg} is within 0.5° F of the value calculated from the hot leg temperature (T_{hot}) and cold leg temperature (T_{cold}) converter outputs.

2. The measured ΔT for each channel is within 0.5% at isothermal conditions.

14.2.12.2.2 Initial Criticality

Test abstracts for initial criticality testing are provided in this subsection. Following the completion of the fuel loading and pre-criticality testing, the plant is brought to initial criticality, according to the test procedures described in the following test abstracts.

14.2.12.2.2.1 Initial Criticality Test Sequence

A. Objective

1. To define the sequence of tests and operations for initial criticality.

B. Prerequisite

1. Plant system conditions are established as required by the individual test instruction within this sequence.

C. Test Method

1. Individual test instructions establish the plant conditions required criticality and during the low power testing program following initial criticality. DCD_14.02-26

D. Acceptance Criterion

1. Relevant acceptance criteria are provided in each of the test procedures.

14.2.12.2.2.2 Initial Criticality

A. Objective

14.2.12.2.3.8 Pressurizer Heater and Spray Capability and Continuous Spray Flow Verification Test

A. Objectives

1. To establish the optimum continuous spray flowrate.

2. To determine the effectiveness of the pressurizer heaters and normal control spray.

3. To demonstrate the depressurization rate by turning off pressurizer heaters.

B. Prerequisites

1. The RCS is at no-load operating temperature and pressure.

2. RCPs are operating.

3. Pressurizer heaters are operable.

C. Test Method

1. While maintaining constant pressurizer water level, spray bypass valves are adjusted until a minimum flow is achieved to maintain the temperature difference between the spray line and the pressurizer within acceptable limits.

2. With the pressurizer spray valves closed, pressurizer heaters are energized, and the time to raise the pressurizer pressure a specified amount is recorded.

3. With the pressurizer heaters de-energized, both spray valves are fully closed, and the time to lower the pressurizer pressure a specified amount is recorded.

4. All RCPs except one are turned off, and the pressurizer heaters are turned off. The depressurization rate is observed with its effect on margin to saturation temperature.

5. The pressurizer heaters are reestablished, charging and steam flow are then varied to observe the effects on RCS depressurization.

D. Acceptance Criteria

1. The spray bypass valves are throttled so that the minimum flow necessary to keep the spray line warm is achieved.

2. The pressurizer pressure~~s~~ ~~which~~ responses to the opening of the pressurizer spray valves and to the actuation of all pressurizer heaters are within the limits described in Subsection 5.4.10.

14.2.12.2.3.9 Natural Circulation Test

(~~first-plant-only test~~Perform on first plant. For subsequent plants, see discussion in Subsection 14.2.8.2.)

A. Objectives

1. To demonstrate the capability to remove decay heat by natural circulation.

B. Prerequisites

1. RCPs are operating.
2. Primary system is at normal operating temperature and pressure.

C. Test Method

1. The test is initiated by tripping all RCPs.
2. Natural circulation is verified by observing the response of the hot leg and cold leg temperature instrumentation in each loop for natural circulation stabilization period and the ability to maintain the cooling mode.

D. Acceptance Criteria

1. Decay heat removal capability is demonstrated by maintaining natural circulation conditions.

14.2.12.2.3.10 Automatic Low Power SG Water Level Control Test

A. Objective

1. To verify the stability of the automatic low power SG water level control system following simulated transients at low power conditions.

B. Prerequisites

1. The reactor is critical, and in the low power level.
2. The SG water level control system is checked and calibrated.
3. SG alarm setpoints are set for each SG.

C. Test Method

1. Induce simulated SG water level transients to verify SG water level control response.

D. Acceptance Criteria

1. To verify the ~~sensitivity~~ ability of the incore and excore nuclear instrumentation systems to detect RCCA misalignment.

2. To verify the conservatism for prediction of power distribution according to RCCA misalignment.

3. To verify that the radial power distribution oscillation is stable.

B. Prerequisites

1. The reactor power is operating at selected power level (50%) and has been at that level long enough to reach xenon equilibrium.

2. The RCS boron concentration and temperature are stable.

3. The control and shutdown banks are positioned as follows for the specific measurement:

   a. For RCCA insertion: Nearly fully withdrawn.

   b. For RCCA withdrawal: At insertion limits.

C. Test Method

1. For RCCA withdrawal, power distribution and excore instrumentation signals are recorded to verify proper response and to determine power distribution and power peaking factors prior to misalignment.

2. The selected rod cluster assembly is withdrawn to the fully withdrawn position. Power distribution and excore instrumentation signals are recorded, to verify proper response and to determine power distribution and power peaking factors at full misalignment position held for one hour.

3. The selected rod cluster assembly is restored to bank position.

4. Reactivity changes are compensated for by dilution or boration as required.

5. For RCCA insertion, the selected rod cluster assembly is inserted to the limit of misalignment specified in Chapter 16 Technical Specifications. Power distribution and excore instrumentation signals are recorded to verify proper responses of them at partial misalignment.

6. The selected rod cluster assembly is fully inserted. Power distribution and excore instrumentation signals are recorded, to verify proper response and to determine power distribution and power peaking factors at full misalignment position held for one hour.

7. The selected rod cluster assembly is restored to the bank position.

8. Reactivity changes are compensated for by dilution or boration as required.

9. The stability index of radial power distribution is evaluated periodically after restoration to normal rod position.

D. Acceptance Criteria

1. Measured power distribution and peaking factors are consistent with prediction.

2. The sensitivity of the incore and excore instrumentation signals to the RCCA misalignment is demonstrated by the results of power distribution measurements.

3. The stability index of radial power distribution is negative.

14.2.12.2.4.6 Remote Shutdown Test

A. Objectives

1. To demonstrate the capability of performing a controlled reactor shutdown to the hot standby condition.

2. To maintain the plant in a hot standby condition from outside the control room.

3. To demonstrate the potential for safely cooling down the plant from hot standby to cold shutdown conditions from outside the control room~~by placing the residual heat removal system into service and reducing the reactor coolant temperature~~.

Note: Testing is conducted in accordance with RG 1.68.2.

B. Prerequisites

1. Reactor power is greater than or equal to 10%.

2. The controls and instrumentation associated with the remote shutdown console are available.

3. Plant systems are in the normal operating mode with the turbine generator in operation.

4. Approved operating procedures for performing a remote shutdown are available.

5. Preoperational testing of plant instrumentation, controls, and systems to be used at remote shutdown locations is completed. This preoperational testing includes verification that all systems to be used during shutdown operation from outside the control room are operable in the manner in which they would be used during the operation (i.e., control from remote stations, manual operation, use of available power supplies, etc.) and that communication is established and maintained among the personnel who is performing the shutdown operation.

6. The authority and responsibility of the control room observers are established and documented in the test procedure. Provisions are made for the following actions:

(a) Assumption of control of the plant if an emergency or unsafe condition develops during the testing that cannot be managed by the shutdown crew.

(b) Performance of non safety-related activities that would not be required during an actual remote shutdown. These could include protection of non safety-related equipment from mechanical damage during the transient and the placement of equipment into standby status when no longer required. Such activities have been previously defined and evaluated to ensure that, if they were not performed during an actual remote shutdown, safe shutdown of the plant can still be achieved.

C. Test Method

1. Transfer control from the control room to the remote shutdown console.

2. Perform a controlled reactor shutdown to the hot standby condition from the remote shutdown console.

3. Demonstrate the capability to achieve and maintain the plant in a hot standby condition from the remote shutdown console for a minimum of 30 minutes.

4. During the demonstration, use only the equipment for which credit is taken to perform an actual remote shutdown.

5. Perform the test with the minimum of personnel required to be at the reactor unit at any one time (minimum shift crew).

6. Obtain the data at locations outside the control room.

7. ~~Using the residual heat removal system in steam condensing mode~~Following the hot standby demonstration, starting from approximately 350°F, reduce the reactor coolant temperature by at least 50 °F from outside the control room using the RHRS.~~reduce the reactor coolant temperature from approximately 350°F to approximately 300°F at a rate that does not exceed Technical Specification limits.~~

D. Acceptance Criteria

1. Transfer of control from the control room to the remote shutdown console is achieved.

2. The ability to perform a controlled reactor shutdown to the hot standby condition and to maintain hot standby conditions from the remote shutdown console is demonstrated.

3. The potential ability to cool down from hot standby to ~~hot~~cold shutdown conditions from outside the control room is demonstrated by reducing the reactor coolant temperature by at least 50 °F using the RHRS from outside the control room.

2. Concrete surface temperatures are maintained in accordance with Subsection 9.4.6.1.2.3.

14.2.12.2.4.12 RCS Flow Measurement Test

A. Objectives

1. As for RCS flow rate measurement, RCS flow rate is determined based on the correlation between data obtained by measuring RCP motor input power and the differential pressure across the reactor coolant line elbow tap, for the purpose of confirming reactor coolant flow is equal to or greater than the design flow specified in Section 5.1.

2. To perform calorimetric flow measurements at 50%, 75%, and 100% power, for the purpose of confirming RCS flow is equal to or greater than the design flow in Section 5.1.

B. Prerequisites

1. Required instrument calibration is completed.

2. Required support systems are operational.

3. The reactor core is installed, and the plant is at normal operating temperature and pressure prior to initial criticality.

C. Test Method

1. Prior to criticality, operating all RCPs and any combination of them including a single operation, input power of each operating RCP motor and relating RCS line elbow tap differential pressure is measured. RCS flow rate is calculated using the correlation between obtained RCP motor input power and RCS line elbow tap differential pressure.

2. Calorimetric flow measurements are performed at the 50%, 75%, and 100% power plateau and RCS flow is calculated.

3. RCS hydraulic resistance coefficients are calculated and recorded based on the RCS flow measurement data and temperature data of RCS is recorded.

D. Acceptance Criterion

1. Reactor coolant flowrate in each loop is equal to or greater than the design flow specified in Section 5.1.

14.2.12.2.4.13 Process and Effluent Radiation Monitoring System Test

A. Objectives

1. To verify the operation of the process and effluent radiation monitor against an acceptable standard.

14.2.13 Combined License Information

COL 14.2(1) *Deleted~~The COL applicant is responsible for describing the program for the testing of other components and systems that are site-specific. Testing of these items demonstrates that they meet requirements as defined in the Final Safety Analysis Report (FSAR). [14.2.1]~~*

COL 14.2(2) *~~The COL applicant provides a description of the organization(s) responsible for all phases of the ITP, and provide a description of the administrative controls that assure that experienced and qualified supervisory personnel and other principal participants are responsible for managing, developing, and conducting the ITP. [14.2.2]~~The COL Applicant reconciles the site-specific organization, organizational titles, organizational responsibilities, and reporting relationships to be consistent with US-APWR Test Program Description Technical Report, MUAP-08009 (Reference 14.2-29) [14.2.2].*

COL 14.2(3) *Deleted~~The COL applicant provides the process used to develop test specifications and test procedures. [14.2.3]~~*

COL 14.2(4) *Deleted~~The COL applicant develops a description of the administrative controls that govern the conduct of test program. These controls include requirements that govern the activities of the startup organization and their interface with other organizations. [14.2.4]~~*

COL 14.2(5) *Deleted~~The COL applicant develops a description of the specific controls for the review, evaluation, and approval of test results of the program by appropriate personnel and/or organizations, including the methods and schedules for approval of test data for each major phase. [14.2.5]~~*

COL 14.2(6) *Deleted~~The COL applicant develops a description of the specific controls for the preparation and retention of test records. [14.2.6]~~*

COL 14.2(7) *The COL applicant provides a schedule for the development of plant procedures that assures required procedures are available for use during the preparation, review and performance of preoperational and startup testing. [14.2.9]*

COL 14.2(8) *The COL applicant provides an event-based schedule, relative to fuel loading, for conducting each major phase of the test program. For multiunit sites, the COL applicant discusses the effects of overlapping initial test program schedules on organizations and personnel participating in each ITP. [14.2.11]*

COL 14.2(9) *The COL applicant identifies and cross-references each test or portion of a test required to be completed prior to fuel load which*

satisfies ITAAC requirements. [14.2.11]

COL 14.2(10) *The COL applicant is responsible for the testing outside scope of the certified design in accordance with the test criteria described in subsection 14.2.1.~~ And testing of the following is required.~~ [14.2.12]*

~~Personnel monitors and radiation survey instruments~~

COL 14.2(11) *The COL holder for the first plant is to perform these tests. For subsequent plants, either these tests are performed, or the COL applicant provides a justification that the results of the first-plant only tests are applicable to the subsequent plant and are not required to be repeated. [14.2.8]*

14.2.14 References

14.2-1 'Tests,' "Rules of General Applicability to domestic Licensing of Byproduct Material," Energy, Title 10, Code of Federal Regulations, Part 30.53, U.S. Nuclear Regulatory Commission, Washington, DC.

14.2-2 'Contents of Applications; Technical Information.' "Domestic Licensing of Production and Utilization Facilities," Energy, Title 10, Code of Federal Regulations, Part 50.34, U.S. Nuclear Regulatory Commission, Washington, DC.

14.2-3 'Quality Assurance Criteria for Nuclear Power Plants and Fuel Reprocessing Plants,' "Domestic Licensing of Production and Utilization Facilities," Energy, Title 10, Code of Federal Regulations, Part 50, Appendix B, U.S. Nuclear Regulatory Commission, Washington, DC.

14.2-4 'Primary Reactor Containment Leakage Testing for Water-Cooled Power Reactors,' "Domestic Licensing of Production and Utilization Facilities," Energy, Title 10, Code of Federal Regulations, Part 50, Appendix J, U.S. Nuclear Regulatory Commission, Washington, DC.

14.2-5 'Contents of Applications; Technical Information,' "Licenses, Certifications, and Approvals for Nuclear Power Plants," Energy, Title 10, Code of Federal Regulations, Part 52.79, U.S. Nuclear Regulatory Commission, Washington, DC.

14.2-6 "Licenses, Certifications, and Approvals for Nuclear Power Plants," Energy, Title 10, Code of Federal Regulations, Part 52, U.S. Nuclear Regulatory Commission, Washington, DC.

14.2-7 NUREG-0737, Clarification of TMI Action Plan Requirements, U.S. Nuclear Regulatory Commission, Washington, DC, November 1980.

14.2-8 'Contents of Applications,' "Licenses, Certifications, and Approvals for Nuclear Power Plants," Energy, Title 10, Code of Federal Regulations, Part 52.47(b)(1), U.S. Nuclear Regulatory Commission, Washington, DC.

DCD_14.02-8 DCD_14.02-71
DCD_14.02-76 DCD_14.02-82
DCD_14.02-83

14.2-23 Standard Test Method for Determining Air Change in a Single Zone by Means of a Tracer Gas Dilution, ASTM E 741-00 (Reapproved 2006), American Society for Testing and Materials International, West Conshohocken, PA.

14.2-24 Single Failure Proof Cranes for Nuclear Power Plants, NUREG-0554, Nuclear Regulatory Commission, Washington, DC May 1979

14.2-25 Design, Inspection and Testing Criteria for Normal Ventilation Atmosphere Cleanup Systems in Light-Water-Cooled Nuclear Power Plants, Regulatory Guide 1.140, Rev. 2, U.S. Nuclear Regulatory Commission, Washington, DC June 2001

14.2-26 Design, Inspection, and Testing Criteria for Air Filtration and Adsorption Units of Post-Accident Engineered-Safety-Feature Atmosphere Cleanup Systems in Light-Water-Cooled Nuclear Power Plants, Regulatory Guide 1.52, Rev. 3, U.S. Nuclear Regulatory Commission, Washington, DC June 2001

14.2-27 Code on Nuclear Air and Gas Treatment, ASME/ANSI AG-1-1997, American Society of Mechanical Engineers

14.2-28 Control Room Habitability at Light-Water Nuclear Power Reactors, Regulatory Guide 1.196, Rev. 1, U.S. Nuclear Regulatory Commission, Washington, DC January 2007

14.2-29 US-APWR Test Program Description Technical Report, MUAP-08009, Revision 0, October, 2008

14.2-30 Rules for Construction of Overhead and Gantry Cranes (Top Running Bridge, Multiple Girder), ASME NOG-1-2004, American Society of Mechanical Engineers.

14.2-31 Below-the-Hook Lifting Devices, ASME B30.20-2006, American Society of Mechanical Engineers.

14.2-32 Performance-Based Containment Leak-Test Program, Regulatory Guide 1.163, Rev. 0, U.S. Nuclear Regulatory Commission, Washington, DC September 1995

14.2-33 Industry Guideline for Implementing Performance-Based Option of 10 CFR 50 Appendix J, NEI 94-01, Rev. 0, Nuclear Energy Institute, July 1995

DCD_14.02-69

DCD_14.02-82

DCD_14.02-100

Table 14.2-2 Regulatory Guides Associated with the ITP (Sheet 2 of 2)

20	RG 1.45, "Guidance on Monitoring and Responding to Reactor Coolant System Leakage," Rev.1, May,2008
21	RG 1.196, "Control Room Habitability at Light-Water Nuclear Power Reactors, Rev. 1, January 2007
22	RG 1.35, "Inservice Inspection Of Ungrouted Tendons In Prestressed Concrete Containments," Rev 3, July 1990
23	RG 1.35.1, "Determining Prestressing Forces For Inspection Of Prestressed Concrete Containments," July 1990

Table 14A-1
Conformance Matrix of RG 1.68 Appendix A Guidance Versus Typical Test Abstracts (Sheet 2 of 21)

RG 1.68 Appendix A	Section Number	Typical Test
1.a.(2) (h)	14.2.12.1.7	Reactor Internals Vibration Test
1.a.(2) (i)	14.2.12.1.6	RCS Preoperational Test
1.a.(2) (j)	-	Not applicable. This is not a design feature of the US-APWR.
1.a.(3)	14.2.12.1.7 14.2.12.1.51	Reactor Internals Vibration Test ~~Not applicable for RCS piping vibration test because vibration of RCS due to steady flow and flow-induced transient are very small so that it is not considered that they will cause any structural damage or any malfunction of RCS.~~Steady State Vibration Monitoring of Safety Related and High Energy Piping
1.a.(4)	14.2.12.1.8	RCS Cold Hydrostatic Preoperational Test
1.b.(1)	14.2.12.1.9 14.2.12.1.10 14.2.12.1.11	Reactor Control, Rod Control, and Rod Position Indication Preoperational Test CRDM Motor-Generator Set Preoperational Test CRDM Initial Timing Preoperational Test The rod worth minimizers is not a design feature of US-APWR. And refueling equipment is not a part of control rod drive system.
1.b.(2)	14.2.12.1.12 14.2.12.1.13 14.2.12.1.14 14.2.12.1.15 14.2.12.1.16 14.2.12.1.45 14.2.12.1.53 14.2.12.1.84	CVCS Preoperational Test - Boric Acid Blending CVCS Preoperational Test - Charging and Seal Water CVCS Preoperational Test -Letdown RCS Lithium Addition and Distribution Test PMWS Preoperational Test Class 1E Bus Load Sequence Preoperational Test Class 1E Gas Turbine Generator Sequence Preoperational test Sampling System Preoperational Test Exception Heat tracing system test is not performed because the system is not a design feature of the US-APWR.
1.b.(3)	-	Not applicable. This is not a design feature of the US-APWR.

Table 14A-1
Conformance Matrix of RG 1.68 Appendix A Guidance Versus Typical Test Abstracts (Sheet 11 of 21)

RG 1.68 Appendix A	Section Number	Typical Test
1.j.(24)	14.2.12.1.18	Reactor Trip System and ESF System Logic Preoperational Test
1.j.(25)	14.2.12.1.18	Reactor Trip System and ESF System Logic Preoperational Test Factory test and software life cycle program assure the function of the system and the quality of the software. The installation of the controlled software is to be checked in construction tests as specified in B. prerequisites so that this test is not performed as a preoperational test.
1.k.(1)	14.2.12.1.78	Process and Effluent Radiological Monitoring System, Area Radiation Monitoring System and Airborne Radioactivity Monitoring System Preoperational Test
1.k.(2)	~~COL 14.2(10)~~-	~~Exception~~Not applicable The test program will be developed under the operational radiation protection program specified in Section 12.5 by the COL licensee.
1.k.(3)	~~14.2.12.1.84~~-	Not applicable The test program will be developed under the operational radiation protection program specified in Section 12.5 by the COL licensee.~~Sampling System Preoperational Test,~~
1.k.(4)	14.2.12.1.79	High-Efficiency Particulate Air Filters and Charcoal Absorbers Preoperational Test
1.l.(1)	14.2.12.1.80	Liquid Waste Management System Preoperational Test
1.l.(2)	14.2.12.1.81	Gaseous Waste Management System Preoperational Test
1.l.(3)	14.2.12.1.82	Solid Waste Management System Preoperational Test
1.l.(4)	14.2.12.1.83	Steam Generator Blowdown System Preoperational Test
1.l.(5)	14.2.12.1.32	Main Condenser Evacuation System Preoperational Test

Table 14A-1
Conformance Matrix of RG 1.68 Appendix A Guidance Versus Typical Test Abstracts (Sheet 15 of 21)

RG 1.68 Appendix A	Section Number	Typical Test
2.a	14.2.12.2.1.1~~1~~	RCS Sampling for Fuel Loading
2.b	14.2.12.1.9 14.2.12.2.1.~~5~~6 14.2.12.2.1.~~6~~7 14.2.12.2.1.8 14.2.12.2.1.~~7~~9	Reactor Control, Rod Control, and Rod Position Indication Preoperational Test Rod Drop Time Measurement Test CRDM Operational Test Rod Position Indication Test Rod Control System Test
2.c	14.2.12.1.18 14.2.12.2.1.~~5~~6 14.2.12.2.1.~~9~~1 0	Reactor Trip System and ESF System Logic Preoperational Test Rod Drop Time Measurement Test Reactor Protection System Test
2.d	14.2.12.2.1.~~10~~ 11	RCS Final Leak Test
2.e	14.2.12.2.1.1~~1~~ 14.2.12.2.4.14	RCS Sampling for Fuel Loading Primary and Secondary Chemistry Test
2.f	~~-~~14.2.12.1.7 14.2.12.1.51 14.2.12.1.50	Reactor Internals Vibration Test Exception: Vibration testing is not performed with fuel loaded. ~~because of the following reason.~~ ~~(i)~~ See Subsection 3.9.2 for the vibration testing of reactor internals. ~~(ii) Same reason as 1.a(3) for the vibration testing of RCS piping~~Steady State Vibration Monitoring of Safety Related and High Energy Piping Dynamic State Vibration Monitoring of Safety Related and High Energy Piping
2.g	14.2.12.2.1.~~4~~2 14.2.12.2.3.6	Fuel Loading Instrumentation and Neutron Source Requirements test Operational Alignment of Nuclear Instrumentation Test
2.h	14.2.12.2.1.12	Incore Detector Test
3	14.2.12.2.2.1 14.2.12.2.2.2	Initial Criticality Test Sequence Initial Criticality

Table 14A-1
Conformance Matrix of RG 1.68 Appendix A Guidance Versus Typical Test Abstracts (Sheet 16 of 21)

RG 1.68 Appendix A	Section Number	Typical Test
4.d	14.2.12.2.3.6	Operational Alignment of Nuclear Instrumentation Test
4.e	14.2.12.2.4.4	Flux Map Test
4.f	14.2.12.2.4.15	Biological Shield Survey Test
4.g	14.2.12.2.4.13	Process and Effluent Radiation Monitoring System Test
4.h	14.2.12.2.4.14	Primary and Secondary Chemistry Test
4.i	14.2.12.1.9 14.2.12.2.1.~~6~~7 14.2.12.2.1.8 14.2.12.2.1.~~7~~9	Reactor Control, Rod Control, and Rod Position Indication Preoperational Test CRDM Operational Test Rod Position Indication Test Rod Control System Test
4.j	14.2.12.2.4.11	Ventilation Capability Test
4.k	14.2.12.2.4.6	Remote Shutdown Test
4.l	-	Exception The response time will not be measured because the MSIVs will be verified during hot functional and preoperational testing. In addition, the operability will be demonstrated during the startup test.
4.m	-	Not applicable. This is not a design feature of the US-APWR.
4.n	-	Exception Self-diagnostic feature assures the operability of the computer system. And the performance of the communication among computer systems is assured by the administrative control for the software and self diagnosis function. Therefore this test provides no significant results.
4.o	14.2.12.2.1.~~5~~6	Rod Drop Time Measurement Test (Previously conducted.)
4.p	14.2.12.2.3.1 14.2.12.2.4.6	Low Power Test Sequence Remote Shutdown Test

Table 14A-1
Conformance Matrix of RG 1.68 Appendix A Guidance Versus Typical Test Abstracts (Sheet 17 of 21)

RG 1.68 Appendix A	Section Number	Typical Test
4.q	14.2.12.2.3.1 14.2.12.2.4.6	Low Power Test Sequence Remote Shutdown Test
4.r	14.2.12.4.14	Primary and Secondary Chemistry Test
4.s	14.2.12.~~2.1.12~~ 1.7	Reactor Internal Vibration Test (Previously conducted.)
4.t	14.2.12.2.3.9	Natural Circulation Test
4.u	14.2.12.2.3.7 14.2.12.2.3.8 14.2.12.2.3.10	Dynamic Automatic Turbine Bypass Control Test Pressurizer Heater and Spray Capability and Continuous Spray Flow Verification Test Automatic Low Power SG Water Level Control Test
5.a	14.2.12.2.4.2	Power Coefficient Determination Test
5.b	14.2.12.2.4.3 14.2.12.2.4.4	Axial Flux Difference Instrumentation Calibration Test and Axial Distribution Oscillation Test Flux Map Test
5.c	-	Not applicable. This is not a design feature of the US-APWR.
5.d	14.2.12.2.4.3	Axial Flux Difference Instrumentation Calibration Test and Axial Distribution Oscillation Test
5.e	14.2.12.2.4.5	Rod Cluster Control Assembly Misalignment Measurement and Radial Power Distribution Oscillation Test
5.f	14.2.12.2.4.5	Rod Cluster Control Assembly Misalignment Measurement and Radial Power Distribution Oscillation Test
5.g	14.2.12.1.9 14.2.12.2.1.~~6~~7 14.2.12.2.1.8 14.2.12.2.1.~~7~~9	Reactor Control, Rod Control, and Rod Position Indication Preoperational Test CRDM Operational Test Rod Position Indication Test (Previously Demonstrated.) Rod Control System Test

Table 14A-1
Conformance Matrix of RG 1.68 Appendix A Guidance Versus Typical Test Abstracts (Sheet 18 of 21)

RG 1.68 Appendix A	Section Number	Typical Test
5.h	-	Exception Rod drop times are measured during pre-critical testing at hot full-flow conditions. There is no provision in the design of US-APWR to allow for determination of rod scram times following normal plant trips. These tests meet the intent of this item.
5.i	14.2.12.2.4.5	Rod Cluster Control Assembly Misalignment Measurement and Radial Power Distribution Oscillation Test
5.j	-	N/A This startup test will not be performed because US-APWR does not include partial scram or rod runback features.
5.k	14.2.12.1.54 14.2.12.1.56 14.2.12.1.57	Safety Injection System (SIS)Preoperational Test, Safety Injection Check Valve Preoperational Test, Safety Injection Accumulator Testing
5.l	14.2.12.2.4.6	Remote Shutdown Test
5.m	14.2.12.2.4.12	RCS Flow Measurement Test Reverse flow through idle RCS loops will not be measured as required by paragraph 5(m). US-APWR will not be licensed to operate with idle loops; therefore, these measurements are not applicable.
5.n	14.2.12.2.4.7	Loose Parts Monitoring System Test
5.o	14.2.12.2.1.~~10~~ 11	RCS Final Leak Test (Previously demonstrated.)
5.p	14.2.12.1.7	Reactor Internal Vibration Test (Previously demonstrated.)
5.q	-	Not applicable. This system is not a design feature of the US-APWR

Table 14A-1
Conformance Matrix of RG 1.68 Appendix A Guidance Versus Typical Test Abstracts (Sheet 19 of 21)

RG 1.68 Appendix A	Section Number	Typical Test
5.r	-	Exception Self-diagnostic feature assures the operability of the computer system. And the performance of the communication among computer systems is assured by the administrative control for the software and self diagnosis function. Therefore this test provides no significant results.
5.s	14.2.12.2.4.8 14.2.12.2.4.9 14.2.12.2.4.10 14.2.12.2.4.16	Automatic Rod Control System Test Operational Alignment of ~~process~~ Process Temperature Instrumentation at Power Test Thermal Power Measurement and Statepoint ~~Date~~ Data Collection Test Load Swing Test Exception The verification of the boron addition systems and emergency feedwater control systems are not performed because the control of these systems is performed by manual control.
5.t	14.2.12.1.4 14.2.12.1.21 14.2.12.1.27	Pressurizer Safety Depressurization Valve (SDV) Preoperational Test Main Steam Supply System Preoperational Test Main Turbine System Valves Preoperational Test (Previously accomplished.)
5.u	-	Exception The operability test of main steam isolation valves (item u) and the demonstration of the dynamic response of the plant (item mm) are not performed because the similar results are obtained when the turbine trip from 100% power test is performed. The closure times for the main steam isolation valves is verified during hot functional and preoperational testing.
5.v	14.2.12.2.4.10 14.2.12.2.4.16	Thermal Power Measurement and Statepoint Date Collection Load Swing Test
5.w	14.2.12.2.4.11	Ventilation Capability Test

Table 14A-1
Conformance Matrix of RG 1.68 Appendix A Guidance Versus Typical Test Abstracts (Sheet 20 of 21)

RG 1.68 Appendix A	Section Number	Typical Test
5.x	14.2.12.2.4.11	Ventilation Capability Test
5.y	14.2.12.2.4.8 14.2.12.2.4.9 14.2.12.2.4.10 14.2.12.2.4.12 14.2.12.2.4.3	Automatic Rod Control System Test Operational Alignment of ~~process~~ Process Temperature Instrumentation at Power Test Thermal Power Measurement and Statepoint Data Collection Test RCS Flow Measurement Test Axial Flux Difference Instrumentation Calibration Test and Axial Distribution Oscillation Test
5.z	14.2.12.2.4.13	Process and Effluent Radiation Monitoring System Test
5.aa	14.2.12.2.4.14	Primary and Secondary Chemistry Test
5.bb	14.2.12.2.4.15	Biological Shield Survey Test
5.cc	-	Exception The gaseous and liquid radwaste systems will be tested as described in the gaseous waste processing system preoperational test abstract and the liquid waste processing system preoperational test abstract. Performance of these tests during the power ascension test phase would produce the same results as testing during the preoperational test phase.
5dd	14.2.12.2.4.6	Remote Shutdown Test The potential capability for cold shutdown is not demonstrated because the test is performed in preoperational test.
5.ee	14.2.12.2.4.11	Ventilation Capability Test
5.ff	14.2.12.2.4.11	Ventilation Capability Test

Table 14A-1
Conformance Matrix of RG 1.68 Appendix A Guidance Versus Typical Test Abstracts (Sheet 21 of 21)

RG 1.68 Appendix A	Section Number	Typical Test
5.gg	14.2.12.1.20	Diverse Actuation System Actuation Test (Previously accomplished.)
5.hh	14.2.12.2.4.16	Load Swing Test
5.ii	-	Exception The complete loss of flow at full-power test will not be performed. Results for reactor coolant system (RCS) flowrates obtained in the flow coastdown test will verify that the RCS flowrates assumed in safety analysis (related to chapter15) are conservative.
5.jj	14.2.12.2.4.17	Loss of Offsite Power at Greater Than 10 % Power Test
5.kk	-	Exception The loss of or bypass of feedwater heaters test will not be performed because US-APWR does not have the bypass line for feedwater heaters and feedwater temperature reduction by the loss of feedwater heater is not occurred from a credible single failure or operator error.
5.ll	14.2.12.2.4.18	Plant Trip from 100 % Power Test
5.mm	-	Exception Tests item u and mm will not be performed as the results obtained will be similar to the results obtained during a plant trip from 100 % power which will be performed. The closure times for the MSIVs will be verified during hot functional and preoperational testing.
5.nn	14.2.12.2.4.19	100 % Load Reduction Test
5.oo	14.2.12.1.52 14.2.12.2.4.20	Thermal Expansion Test Dynamic Response Test

Chapter 15

non-LOCA events. These fractions are intended to be adjusted for the relative power fraction (i.e., power peaking factor) for the specific fuel rods calculated or assumed to be damaged during the non-LOCA transient.

Table 15.0-15 summarizes the fraction of fission products released into containment in the (1) gap and (2) early-in-vessel release phases of LOCA analyses performed for the US-APWR for specific fission product radionuclide groups. These values are intended to be applied to the core-average inventories. Table 15.0-16 summarizes the time for onset and the duration of the LOCA release phases for which core inventory fractions are listed in Table 15.0-15.

The chemical forms of the iodine released from the fuel to the containment are prescribed by Reference 15.0-4 to be:

- Cesium iodide (Particulates) 0.95
- Elemental iodine 0.0485
- Organic iodide 0.0015

The values listed in Tables 15.0-8, 15.0-15, and 15.0-16 are based on Section 3 of Reference 15.0-4.

15.0.3.3 Atmospheric Dispersion Factors

The analyses documented in this chapter assume that airborne radioactive material may be released for some events. Radiation dose consequences from these postulated releases are calculated for hypothetical individuals who are assumed to be at the EAB and LPZ surrounding the plant site for these events. These consequences take credit for dispersion as the airborne radioactive materials are transported between the release point and the postulated (receptor) individuals.

The offsite χ/Q values are determined by representative values at the corresponding EAB and LPZ distance selected from the χ/Q value of a reasonable number of the existing sites. The χ/Q values used in determining the radiological consequences of postulated accidents are listed in Table 2.0-1 of Chapter 2. Table 15.0-13 reiterates these χ/Q values.

The MCR χ/Q values are also defined in Table 2.0-1 of Chapter 2. The χ/Q values for the different required time intervals for the MCR are listed by design basis accident event in Tables 15A-18 through 15A-23. The locations of the potential release points and their relationship to the MCR air intake and inleak are shown in Figure 15A-1.

In the COLA, if the site-specific χ/Q values exceed DCD χ/Q values, then the COL Applicant is to demonstrate how the dose reference values in 10 CFR 50.34 and 10CFR52.79 and the control room dose limits in 10 CFR 50, Appendix A, General Design ~~Criteria~~ Criterion 19 are met for affected events using site-specific χ/Q values. Additionally, the Technical support Center (TSC) dose should be evaluated against the

habitability requirements in Paragraph IV.E.8 to 10CFR Part 50, Appendix E and 10CFR50.47(b)(8) and (b)(11).

15.0.3.4 Radiological Dose Conversion Factors

The radiological dose conversion factors and half-life employed to calculate radiological consequences for those events that may result in releases of radioactive material from the reactor plant are listed in Table 15.0-14. These values are based on References 15.0-9 and 15.0-10.

15.0.3.5 Airborne Radioactivity Removal Coefficients

Appendix 15A describes the airborne radioactivity removal coefficients that are used in the US-APWR radiological analyses. Equations are presented for two removal mechanisms. One mechanism is elemental iodine removal by wall deposition and the second mechanism is particulate removal.

15.0.4 Combined License Information

COL 15.0 (1) In the COLA, if the site-specific χ/Q values exceed DCD χ/Q values, then the COL Applicant is to demonstrate how the dose reference values in 10 CFR 50.34 and 10 CFR 52.79 and the control room dose limits in 10 CFR 50, Appendix A, General Design Criterion ~~Criteria~~ 19 are met for affected events using site-specific χ/Q values. Additionally, the Technical Support Center (TSC) dose should be evaluated against the habitability requirements in Paragraph IV.E.8 to 10 CFR Part 50, Appendix E, and 10 CFR 50.47(b)(8) and (b)(11).

15.0.5 References

15.0-1 American National Standards Institute (ANSI) N18.2-1973 / American Nuclear Society (ANS) 18.2-1973, Nuclear Safety Criteria for the Design of Stationary PWR Plants (Historical).

15.0-2 Combined License Applications for Nuclear Power Plants (LWR Edition), NRC Regulatory Guide 1.206, June 2007.

15.0-3 Thermal Design Methodology, MUAP-07009-P (Proprietary) and MUAP-07009-NP (Non-Proprietary), May 2007.

15.0-4 Alternative Radiological Source Terms for Evaluating Design Basis Accidents at Nuclear Power Reactors, NRC Regulatory Guide 1.183, July 2000.

As shown in Table 15.1.5-3, for the case in which the steam line piping failure occurs coincidently with a pre-transient iodine spike, the TEDE doses are calculated to be 0.19 rem at the EAB and 0.11 rem at the LPZ outer boundary. These doses are less than the dose guideline of 25 rem TEDE stipulated by 10 CFR 50.34.

The doses for the MCR and TSC for the steam line piping failure are bounded by the MCR doses calculated for the LOCA event described in Section 15.6.5.5. Consequently, no doses are provided for the steam line piping failure event.

15.1.5.6 Conclusions

In all three core and system response analysis cases presented in this section, the minimum DNBR stays above the 95/95 limit, and no fuel failures are predicted as a result of this accident. Because DNB is not predicted, the issue of DNB propagation under low pressure conditions representative of this event does not need to be addressed.

The RCS pressure and steam pressure remain well below 110% of their system design pressures, so the integrity of the reactor coolant pressure boundary and the integrity of the main steam system pressure boundary are maintained. This meets the acceptance criteria that the pressures be maintained within acceptable design limits.

Steam system piping failures do not lead to a more serious fault condition.

The resultant doses are well within the guideline values of 10 CFR 50.34.

Table 15.1.5-2
Parameters Used in Evaluating the Radiological Consequences of Steam System Piping Failure (Sheet 2 of 2)

Parameter	Value
Activity Release Data for the Steam Generator in the Faulted Loop	
Primary-to-secondary leak rate (gpd)	150
Flow flashing fraction (lb/min)	
0 to 14 h	0.874
Steam release (lb)	
0 to 0.00112 h	120,000
0.00112 to 0.00278 h	158,000
0.00278 to 0.0612 h	2,190,000
0.0612 to 0.412 h	657,000
0.412 to 14 h	0
Iodine Partition Coefficient	1
Activity Release Data for the Steam Generator in the Intact Loops	
Primary-to-secondary leak rate (gpd)	450
Steam released (lb)	
0 to 8 h	1,540,000
8 to 14 h	1,540,000
Iodine partition coefficient	100
Particulate partition coefficient for moisture carryover in the steam generators	1000
MCR and TSC Parameters	
~~Control room envelope~~ Envelope volume ~~(including MCR)~~	See Table 15.6.5-5.
Occupancy frequency	See Table 15.6.5-5.
Total unfiltered inleakage	See Table 15.6.5-5.
~~Main control room~~ HVAC system	See Table 15.6.5-5.
Radiological Dose Parameters	
χ/Q	See Table 15.0-13 and 15A-18.~~.~~
Breathing rate	See Table 15.0-13.
Dose conversion factors	See Table 15.0-14.

Table 15.1.5-3
Radiological Consequences of Steam System Piping Failure

Dose Location	TEDE Dose (rem)
Transient-initiated iodine spike	
EAB (0 to 2 hours)	0.32
LPZ outer boundary	0.28
MCR [*1]	4.3
TSC	Less than MCR LOCA dose
Pre-transient iodine spike	
EAB (0 to 2 hours)	0.19
LPZ outer boundary	0.11
MCR [*1]	3.4
TSC	Less than MCR LOCA dose

Note:
[*1] The direct radiation shine dose at the time of LOCA is added as a direct radiation shine dose.

elemental and 3% organic. These fractions apply to iodine released as a result of fuel damage and to iodine released during iodine spiking.

The only filtration system considered in the analysis which limits the consequences of the RCP rotor seizure transient is the main control room (MCR) heating, ventilation, and air conditioning (HVAC) system.

The χ/Q values and breathing rates are listed in Table 15.0-13. The breathing rates are obtained from NRC Regulatory Guide 1.183 (Ref. 15.3-4).

Other assumptions relating to the transport, reduction, and release of radioactive material to the environment are those covered in Appendix G of RG 1.183 (Ref. 15.3-4).

15.3.3.5.3 Results

The calculated TEDE doses for the limiting 2-hour period at the EAB and for the duration of the transient at the LPZ outer boundary are listed in Table 15.3.3-5.

As shown in Table 15.3.3-5, the TEDE doses for the limiting 2-hour period are calculated to be 0.49 rem at the EAB and 0.70 rem at the LPZ outer boundary. These doses are less than 10% of the dose guideline of 25 rem TEDE stipulated by 10 CFR 50.34.

The doses for the MCR and TSC for the RCP rotor seizure event are bounded by the MCR doses calculated for the LOCA event described in Section 15.6.5.5. Consequently, no doses are provided for the RCP rotor seizure event.

15.3.3.6 Conclusions

For a seizure of a single reactor coolant pump rotor, the analysis demonstrates that the number of rods predicted to be in DNB is less that the number assumed for the radiological dose analysis. Additionally, the maximum hot spot cladding temperature remains below the limit of 2200°F and the fraction of local cladding oxidation due to the zirconium-water reaction rate is significantly below the limit of 17%.

The peak RCS pressure remains below 110% of the RCS design pressure. Therefore, the integrity of the reactor coolant pressure boundary is maintained. Similarly, because the steam generator pressure does not exceed 110% of the main steam system design pressure, the integrity of the main steam system is maintained.

The resultant doses are well within the guideline values of 10 CFR 50.34.

In addition, this event does not lead to a more serious fault condition.

DCD Table 15.3.3-4
Parameters Used in Evaluating the Radiological Consequences of RCP Rotor Seizure (Sheet 2 of 2)

Parameter	Value
MCR and TSC Parameters	
~~Control room envelope~~ Envelope volume ~~(including MCR)~~	See Table 15.6.5-5.
Occupancy frequency	See Table 15.6.5-5.
Total unfiltered inleakage	See Table 15.6.5-5.
~~Main control room~~ HVAC system	See Table 15.6.5-5.
Radiological dose parameters	
χ/Q	See Table 15.0-13 and 15A-19.
Breathing rate	See Table 15.0-13.
Dose conversion factors	See Table 15.0-14.

Table 15.3.3-5
Radiological Consequences of a RCP Rotor Seizure

Dose Location	TEDE Dose (rem)
EAB (10 to 12 hours)	0.49
LPZ outer boundary	0.70
MCR [*1]	1.1
TSC	Less than MCR LOCA dose

Note:
[*1]The direct radiation shine dose at the time of LOCA is added as a direct radiation shine dose.

instantaneously and homogeneously mix in the refueling water storage pit (RWSP) water. With the exception of iodine, all radioactive materials in the recirculating liquid are assumed to be retained in the liquid phase.

Manual actuations of the containment spray systems and the annulus emergency exhaust systems are assumed for a rod ejection accident (See Section 7.5). The containment spray systems are assumed to start at 35 minutes after the initiation of an accident, and the penetration areas are assumed to become negative pressure at 34 minutes by the annulus emergency exhaust systems. The containment leakage is assumed to be the same as that assumed for LOCA analyses (See Section 15.6.5). Iodine and aerosol removal in containment by spray and natural deposition is credited (See Section 6.5.2 and Appendix 15A.1.2).

The filtration system considered in the analysis which limits the consequences of the rod ejection accident is the annulus emergency exhaust system and the main control room (MCR) heating, ventilation, and air conditioning (HVAC) system.

The χ/Q values and breathing rates are listed in Table 15.0-13. The breathing rates are obtained from NRC Regulatory Guide 1.183 (Ref. 15.4-4).

Other assumptions relating to the transport, reduction, and release of radioactive material to the environment are those covered in Appendix H of RG 1.183 (Ref. 15.4-4).

15.4.8.5.3 Results

The calculated TEDE doses have been analyzed for the limiting 2-hour dose at the EAB and for the duration of the transient at the LPZ outer boundary. The results are listed in Table 15.4.8-4.

As shown in Table 15.4.8-4, the TEDE doses are calculated to be 5.1 rem at the EAB and 4.5 rem at the LPZ outer boundary. These doses are less than 25% of the dose guideline of 25 rem TEDE stipulated by 10 CFR 50.34.

The doses for the MCR and TSC for the rod ejection accident are bounded by the MCR doses calculated for the LOCA event described in Section 15.6.5.5. Consequently, no doses are provided for the rod ejection accident.

15.4.8.6 Conclusions

For an rod ejection accident, the analysis for HFP conditions demonstrates that the number of rods predicted to be in DNB is less than the number assumed for the radiological dose analysis. Additionally, the peak fuel centerline temperature remains below the fuel melting temperature limit. The analysis for HZP conditions demonstrates that fuel enthalpy and the fraction of local cladding oxidation due to the zirconium-water reaction rate remain below the limits for PCMI failure.

The peak RCS pressure remains below 110% of the RCS design pressure. Therefore,

Table 15.4.8-3
Parameters Used in Evaluating the Radiological Consequences of the Rod Ejection Accident (Sheet 2 of ~~2~~3)

Parameter	Value
RCS and Steam System Parameters	
Total steam generator tube leakage (gal/day)	600
Reactor coolant mass (lb) Secondary coolant mass, 4 steam generators (lb)	646,000 456,000
Primary-to-secondary leakage duration (h)	14
Steam released (lb)	
0 to 8 h	1,540,000
8 to 14 h	1,540,000
Iodine partition coefficient	100
Particulate partition coefficient for moisture carryover in the steam generators	1000
Offsite power	Lost after trip
Containment leakage release data	
Elemental iodine deposition removal rate Decontamination factor for elemental iodine ~~Removal rate for particulates~~ Powers model percentile for particulates deposition removal coefficient in unsprayed region only (%) Particulates containment spray removal coefficient in sprayed region only (h^{-1}) Elemental iodine removal end time (h) The time at which DF for particulate reach 50 (h)	~~See Appendix 15A.1.2.~~ 0.376 ~~See Appendix 15A.1.2.~~ 200 ~~See Appendix 15A.1.2.~~ 10 7.36 (When DF for particulate reaches 50, this removal coefficient is decreased by a factor of 10.) 13.9 2.6
Containment volume (ft^3)	2,800,000
Containment leak rate (%/d), 0-24 hr Containment leak rate (%/d), > 24 hr	0.15 0.075
Leakage fraction to the penetration areas (%) Leakage fraction to the environment (%)	50 50
Initiating time of containment spray system (min) Negative pressure arrival time of annulus emergency exhaust system (min)	35 34
HEPA filter efficiency for particulates of annulus emergency exhaust system (%)	99
~~**ESF system leakage release data**~~	
~~Recirculation water mass (lb)~~ ~~Recirculation water leakage rate (lb/h)~~ ~~Start time of recirculation water leakage (min)~~ ~~Flashing fraction (%)~~	~~2,360,000~~ ~~17.6~~ ~~30~~ ~~10~~
~~Accident period (d)~~	~~30~~

Table 15.4.8-3
Parameters Used in Evaluating the Radiological Consequences of the Rod Ejection Accident (Sheet 3 of 3)

Parameter	Value
ESF system leakage release data	
Recirculation water mass (lb)	2,360,000
Recirculation water leakage rate (lb/h)	17.6
Start time of recirculation water leakage (min)	30
Flashing fraction (%)	10
Accident period (d)	30
MCR and TSC Parameters	
Envelope volume	See Table 15.6.5-5.
Occupancy frequency	See Table 15.6.5-5.
Total unfiltered inleakage	See Table 15.6.5-5.
HVAC system	See Table 15.6.5-5.
Radiological dose parameters	
χ/Q	See Table 15.0-13.
Breathing rate	See Table 15.0-13.
Dose conversion factors	See Table 15.0-14.

Table 15.4.8-4
Radiological Consequences of Rod Ejection Accident

Dose Location	TEDE Dose (rem)
EZB (0 to 2 hours)	5.1
LPZ outer boundary	4.5
MCR [*1]	4.4
TSC	Less than MCR LOCA dose

Note:
[*1]The direct radiation shine dose at the time of LOCA is added as a direct radiation shine dose.

- The only filtration system considered in the analysis which limits the consequences of the failure of small lines carrying primary coolant outside containment is the main control room (MCR) heating, ventilation, and air conditioning(HVAC) system.

- The χ/Q values and breathing rates are listed in Table 15.0-13. The breathing rates are obtained from NRC Regulatory Guide 1.183 (Ref. 15.6-4).

15.6.2.5.3 Results

As shown in Table 15.6.2-2, the calculated TEDE doses are determined to be 1.5 rem at the EAB and 0.60 rem at the LPZ outer boundary.

These doses are less than 10% of the dose guideline of 25 rem TEDE stipulated by 10 CFR 50.34. The dose guideline is based on the acceptance criterion given in SRP 15.6.2.

The doses for the MCR and TSC for the failure of small lines carrying primary coolant outside containment are bounded by the MCR doses calculated for the loss-of-coolant accident (LOCA) event described in subsection 15.6.5.5. Consequently, no doses are provided for the failure of small lines carrying primary coolant outside containment.

15.6.2.6 Conclusions

A single charging pump provides enough makeup water to the bounding small line break size so that the pressurizer level can be maintained in its normal operational range throughout the transient. Therefore, no fuel damage results from this event.

The resultant doses are well within the guideline values of 10 CFR 50.34.

Table 15.6.2-1
Parameters Used in Evaluating the Radiological Consequences of Failure of Small Lines Carrying Primary Coolant Outside Containment

Parameter	Value
Core thermal power level (MWt)	4540 (2% above the design core thermal power)
Reactor coolant iodine concentration	The reactor coolant iodine concentration is based on a concurrent iodine spike corresponding to 500 times the release rate of iodine at the equilibrium value (1 μCi/g DE I-131).
Reactor coolant noble gas concentration	300 μCi/g DE Xe-133
Break flow rate (gpm)	97 (at density of 62.4 lb/ft3)
Fraction of reactor coolant flashing	47% based on initial reactor coolant enthalpy at maximum normal RCS pressure and final reactor coolant enthalpy at atmospheric pressure
Duration of accident (min)	45
~~Control room envelope~~ Envelope volume ~~(including MCR)~~	See Table 15.6.5-5.
Occupancy frequency	See Table 15.6.5-5.
Total unfiltered inleakage	See Table 15.6.5-5.
~~Main control room~~ HVAC system	See Table 15.6.5-5.
χ/Q	See Table 15.0-13 and 15A-21.
Breathing rate	See Table 15.0-13.
Dose conversion factors	See Table 15.0-14.

Table 15.6.2-2
Radiological Consequences of Failure of Small Lines Carrying Primary Coolant Outside Containment

Dose Location	TEDE Dose (rem)
EAB dose (0 to 2 hours)	1.5
LPZ boundary dose	0.60
MCR [*1]	0.57
TSC	Less than MCR LOCA dose

Note:
[*1]The direct radiation shine dose at the time of LOCA is added as a direct radiation shine dose.

These fractions apply to iodine released as a result of fuel damage and to iodine released during iodine spiking.

A part of break flow is assumed to be flashing. The flashing flow used in radiological consequence analysis is the break flow multiplied by flashing fraction. The flashing fraction is calculated based on the difference between reactor coolant and affected steam generator enthalpy. The flashing flows are based on Figure 15.6.3-8 and conservatively input as constant flows in each time step.

Similarly, the steam release flows from affected and intact steam generators are based on Figures 15.6.3-9 and 15.6.3-10. These steam release flows are inputted as constant flows each time steps, conservatively.

The only filtration system considered in the analysis which limits the consequences of the steam system piping rupture transient is the main control room (MCR) heating, ventilation, and air conditioning (HVAC) system.

The χ/Q values and breathing rates are listed in Table 15.0-13. The breathing rates are obtained from NRC Regulatory Guide 1.183 (Ref. 15.6-4).

Other assumptions relating to the transport, reduction, and release of radioactive material to the environment are those covered in Appendix F of RG 1.183 (Ref. 15.6-4).

15.6.3.5.3 Results

As shown in Table 15.6.3-5, for the case in which the iodine spike is initiated by the accident, the TEDE doses for the limiting 2 hours case are calculated to be 0.96 rem at the EAB and 0.43 rem at the LPZ outer boundary. These doses are less than 10% of the dose guideline of 25 rem TEDE stipulated by 10 CFR 50.34.

As shown in Table 15.6.3-5, for the case in which the SGTR occurs coincidently with a pre-existing iodine spike, the TEDE doses are calculated to be 3.6 rem at the EAB, and 1.5 rem at the LPZ outer boundary. These doses are less than the dose guideline of 25 rem TEDE stipulated by 10 CFR 50.34.

The doses for the MCR and TSC for the SGTR are bounded by the MCR doses calculated for the loss-of-coolant accident (LOCA) event described in Section 15.6.5.5. Consequently, no doses are provided for the SGTR event.

15.6.3.6 Conclusions

Following the occurrence of a SGTR accident, the operators can identify and isolate the ruptured steam generator in a timely manner. It has also been shown that the RTS and the ESF, in conjunction with operator actions, can terminate the primary-to-secondary break flow and stabilize the reactor coolant system in a safe condition before steam generator overfill occurs.

DCD Table 15.6.3-4
Parameters Used in Evaluating Radiological Consequences of Steam Generator Tube Rupture (Sheet 3 of 3)

Parameter	Value
MCR and TSC Parameters	
~~Control room envelope~~ Envelope volume ~~(including MCR)~~	See Table 15.6.5-5.
Occupancy frequency	See Table 15.6.5-5.
Total unfiltered inleakage	See Table 15.6.5-5.
~~Main control room~~ HVAC system	See Table 15.6.5-5.
Radiological dose parameters	
χ/Q	See Table 15.0-13 and 15A-21.
Breathing rate	See Table 15.0-13.
Dose conversion factors	See Table 15.0-14.

Table 15.6.3-5
Radiological Consequences of Steam Generator Tube Rupture

Dose Location	TEDE Dose (rem)
Transient-initiated iodine spike	
EAB (0 to 2 hours)	0.96
LPZ outer boundary	0.43
MCR [*1]	0.61
TSC	Less than MCR LOCA dose
Pre-transient iodine spike	
EAB (0 to 2 hours)	3.6
LPZ outer boundary	1.5
MCR [*1]	3.5
TSC	Less than MCR LOCA dose

Note:
[*1] The direct radiation shine dose at the time of LOCA is added as a direct radiation shine dose.

containment spray "washout" removal coefficient for particulate iodine is calculated using NUREG-0800, SRP 6.5.2 (Ref. 15.6-18).

The evaluation of the containment sprays should address areas within the containment that are not covered by the spray drops. The mixing rate attributed to natural convection between sprayed and unsprayed regions of the containment building, provided that adequate flow exists between these regions, is assumed to be two turnovers of the unsprayed regions per hour.

Decontamination Factor (DF) for the containment atmosphere achieved by the containment spray system is time dependent and is determined based on NUREG-0800, SRP 6.5.2 (Ref. 15.6-18). Credit for elemental iodine removal is assumed to continue until the DF of 200 (See Appendix 15A.1.2) is reached in the containment atmosphere.

Radioactivity removal by containment spray and natural deposition is discussed additionally in Section 6.5.2 and Appendix 15A.1.2.

In addition to removal of airborne radioactivity by natural deposition and by sprays, removal of airborne activity by filters is considered. Decay of fission products and in-growth of daughter products are also considered. The transport pathway models include filters, and air leakage. Doses at the EAB, LPZ, and the MCR are also calculated.

Release paths

Radioactive material can escape from the containment to the environment by three different pathways for the large break LOCA. Releases occur from the containment purge line prior to containment isolation, containment leakage, and ECCS equipment leakage outside the containment. Containment leakage releases consist of unfiltered leakage and leakage filtered by the annulus emergency exhaust system. The doses from these release paths are summed to obtain the total dose for the LOCA. The releases are assumed to be ground level releases.

It is assumed that containment purge is in operation when the LOCA occurs. Prior to containment isolation, radionuclides released into the containment from the break can escape through this pathway until the purge system isolation valves are closed. The volume of gas escaping is calculated based on a release rate of 20,700 cfm and a valve closure time of 15 seconds from accident initiation. Radionuclides release from the containment low volume purge system assumes that 100% of the radionuclide inventory in the RCS liquid is released to the containment at the initiation of the LOCA. No credit is taken for the filters in this purge line.

The majority of the releases due to the LOCA are the result of containment leakage. The containment is assumed to leak at its design leak rate for the first 24 hours. Per Reference 15.6-4, the leak rate may be reduced to 50% of the peak leak rate after the first 24 hours. The containment integrated leak test verifies that the leak rate is less than the allowable leakage rate specified in 10 CFR 50, Appendix J.

The annulus emergency exhaust system prevents uncontrolled radioactive release from the containment penetrations and safeguard components to the environment. This

15.6.5.5.1.2 Main Control Room Consequence Model

The release from the LOCA has the potential to expose personnel in the MCR. The TEDE analysis considered all sources of radiation that will cause exposure to MCR personnel. The sources include:

- Contamination of the MCR atmosphere by the intake of the radioactive material contained in the radioactive plume released from the facility,
- Contamination of the MCR atmosphere by the infiltration of airborne radioactive material from areas and structures adjacent to the control room envelope (CRE),
- Direct radiation from the external radioactive plume released from the facility,
- Direct radiation from radioactive material in the containment,
- Direct radiation from radioactive material in the MCR emergency filtration unit.

The radioactive material releases and radiation levels used in the main control room dose analysis are based on the same source term, transport, and release assumptions used for determining the EAB and the LPZ TEDE values.

Credit for engineered safety features that mitigate airborne radioactive material within the MCR are assumed according to the guidance given in the Reference 15.6-24. Such features included main control room isolation or pressurization, or intake or recirculation filtration.

When radioactivity enters the MCR, the MCR heating, ventilation, and air conditioning (HVAC) system switches over to the pressurization mode. The main control room HVAC system which works during normal operation is not a safety-class system but provides defense in depth.

The main control room HVAC system provides passive pressurization of the MCR from a filtered air intake to prevent in-leakage of contaminated air to the MCR during the accident. The main control room HVAC system automatically transfers to emergency operation mode (pressurization mode) on a ECCS actuation or a high radiation signal. ~~The MCR is accessed by a vestibule entrance, which restricts the volume of any contaminated air that can enter the MCR from ingress and egress. The equivalent inflow of unfiltered air due to expected ingress/egress has been determined to be 120 cfm.~~ The total amount of unfiltered inleakage into the control room is 120 cfm. This total value includes the inleakage through the control room envelope and unexpected inleakage through the control room envelope such as through ingress to and egress from doors without a vestibule.

Assumed filter efficiency of MCR emergency filtration units is based on RG 1.52 (Ref. 15.6-22) and Generic Letter 99-02 (Ref.15.6-23).

Reference 15.6-4 provides guidance on calculating the consequences to the main control room receptor. The dose receptor is a hypothetical maximum exposed individual who is present in the control room for 100% of the time during the first 24 hours after the event, 60% of the time between 1 and 4 days, and 40% of the time from 4 days to 30 days. For

the duration of the event, the breathing rate of this individual is assumed to be 3.5 x 10^{-4} m^3/s.

MCR doses are calculated using dose conversion factors identified in Regulatory Position 4.1 of Reference 15.6-4. The deep dose equivalent (DDE) from photons are corrected for the difference between finite cloud geometry in the control room and the semi-infinite cloud assumption used in calculating the dose conversion factors. The following expression is used to correct the semi-infinite cloud dose, DDE∞, to a finite cloud dose, DDE_{finite}, where the control room is modeled as a hemisphere that has a volume, V, in cubic feet, equivalent to that of the control room.

$$DDE_{finite} = \frac{DDE_{\infty} V^{0.338}}{1173}$$

The MCR dose calculation models are provided in Section 15A.4 for the determination of doses resulting from activity which enters the CRE.

15.6.5.5.1.3 Technical Support Center Consequence Model

The radioactive material releases and radiation levels used in the technical support center (TSC) dose analysis used the same source term, transport, and release assumptions used for determining the MCR TEDE values. The TSC dose calculation models are the same as the MCR dose calculation model (See Table 15.6.5-5). That is, ratio of ventilation flow rate to TSC volume is the same value as that of the MCR. Also, the efficiency of HEPA filter and charcoal absorber of the TSC are the same as those of the MCR. The distances from release points to receptors are almost the same between the TSC and the MCR (See Table 15A-22). Therefore, the radiological consequences in the TSC are represented by those in the MCR.

15.6.5.5.2 Input Parameters and Initial Conditions

Major input parameters for the consequence analysis during the LOCA are summarized in Table 15.6.5-4, Table 15.0-10, and Tables 15.0-12 through 15.0-16. Also, the major input parameters for the MCR consequence analysis during the LOCA are summarized in Table 15.6.5-5, and Tables 15A-18 through 15A-23.

Other assumptions relating to the transport, reduction, and release of radioactive material to the environment are those covered in Appendix A of RG 1.183 (Ref. 15.6-4).

15.6.5.5.3 Results

The doses calculated for the EAB and the LPZ boundary are listed in Table 15.6.5-16. The TEDE doses for the limiting 2 hours are calculated to be 13 rem at the EAB and 13 rem at the LPZ outer boundary. The doses are within the 10 CFR 50.34 dose guideline of 25 rem TEDE.

The doses calculated for the MCR personnel due to airborne activity entering the MCR are listed in Table 15.6.5-16. Also listed on Table 15.6.5-16 are the doses due to direct

Table 15.6.5-4

US-APWR Major Input Parameters Used in the LOCA Consequence Analysis (Sheet 2 of 2)

Parameters	Value
Containment leakage release data	
Containment volume (ft^3)	2,800,000
Containment leak rate (%/d), 0-24 hr	0.15
Containment leak rate (%/d), > 24 hr	0.075
Leakage fraction to penetration areas (%)	50
Leakage fraction to environment (%)	50
Filter efficiency for particulates in annulus emergency exhaust system (%)	99
Penetration areas negative pressure arrival time (min)	4
Containment spray system initiation time (min)	5
Containment spray flow rate (lb/h)	2,650,000
Sprayed Containment Volume (ft^3)	1,680,000
Mixing rate between the sprayed and unsprayed regions of containment (cfm)	37,300
Elemental iodine deposition removal coefficient in sprayed and unsprayed regions (h^{-1})	~~See Section 15A.1.2.~~ 0.376
~~Removal coefficient for~~ Powers model percentile for particulates deposition removal coefficient in unsprayed region only (%)	~~See Section 15A.1.2.~~ 10
Particulates containment spray removal coefficient in sprayed region only (h^{-1})	7.32 (When DF for particulate reaches 50, this removal coefficient is decreased by a factor of 10.)
DF limit for elemental iodine removal	~~See Section 15A.1.2.~~ 200
Elemental iodine removal end time	15.0 hr
The time when the DF for particulate equals 50	3.23 hr
ESF system leakage release data	
Recirculation water mass (lb)	3,540,000
Recirculation water leakage rate (lb/h)	17.6
Start time of recirculation water leakage (min)	0
Flash fraction (%)	10
Accident period (d)	30
χ/Q	See Tables 15.0-13 and 15A-22.
Breathing rate	See Table 15.0-13.
Dose conversion factors	See Table 15.0-14.

Table 15.6.5-5

US-APWR Major Input Parameters Used in the ~~Main Control Room~~MCR and TSC Consequence Analysis for the LOCA

Parameters	~~Value~~Value	
	MCR	TSC
~~CRE~~ Envelope volume (including MCR) (ft3)	140,000	46,000
Occupancy frequency		
0 to 24 hrs	1.0	1.0
24 hrs to 96 hrs	0.6	0.6
96 hrs to 720 hrs	0.4	0.4
Unfiltered inleakage via ingress/egress (cfm)	120	40
~~Main control room~~ HVAC system		
Time delay to switch from normal operation to emergency CRE air filtration mode (s)	180	180
Unfiltered air intake flow during normal operation (cfm)	1800	1000
Filtered air intake flow (cfm)		
Filtered air recirculation flow (cfm)	1,200	400
Filter efficiency	2,400	1400
• Elemental iodine (%)		
• Organic iodine (%)	95	95
• Particulates (%)	95	95
	99	99

~~CRE volume (including MCR) (ft^3)~~	~~140,000~~
~~Occupancy frequency~~	

Table 15.6.5-16

Radiological Consequences of the LOCA

Dose Location	TEDE Dose (rem)
EAB (0.5 to 2.5 hours)	13
LPZ outer boundary	13
MCR dose	
Airborne activity entering the MCR	4.4
Direct radiation from the containment	8.2×10^{-3}
Direct radiation from the radioactive plume	2.1×10^{-4}
Direct radiation from the recirculation filters	9.2×10^{-3}
Total	4.5
TSC dose	Less than MCR dose

15.7.4.2.1.4 Assembly Power Level

The damaged fuel assembly is assumed to be the one operated for the longest time at maximum power (102% of nominal power). Every fuel rod in the damaged assembly is assumed to have operated at the maximum fuel rod radial peaking factor. This is a conservative assumption because most fuel rods operate below the maximum fuel rod radial peaking factor.

15.7.4.2.2 Release Pathway

Although the water above the damaged fuel acts to filter the elemental iodine, it is assumed to have no effect on organic iodine or noble gases (i.e., DF of 1).

The release duration is assumed to be 2 hours. It is assumed that after the radionuclides leave the water, they are released directly to the atmosphere within a period of 2 hours.

No credit for further filtration of the released radionuclides is taken for the fuel handling accident either in the fuel handling area or inside the containment.

15.7.4.3 Results

Offsite doses are calculated at the EAB and the outer boundary of the LPZ. As shown in Table 15.7.4-2, the dose at the EAB is calculated to be 3.3 rem TEDE. At the outer boundary of the LPZ, the dose is calculated to be 1.4 rem TEDE.

These doses are well within the dose limit of 25 rem TEDE given in 10 CFR 50.34. “Well within” is defined as being less than or equal to 25% of the dose limit.

The doses for the main control room (MCR) and TSC from the fuel handling accident are bounded by the MCR doses calculated for the loss-of-coolant accident (LOCA) event described in Section 15.6.5.5. Consequently, no doses are provided for the fuel handling accident.

15.7.4.4 Conclusions

The resultant doses are well within the guideline values of 10 CFR 50.34.

Table 15.7.4-1
Fuel Handling Accident Source Term Assumptions

Parameter	Value
Core thermal power level (MWt)	4540 (2% above the design core thermal power)
Decay (cooling) time (h)	24
Core source term Noble gases (Xe & Kr) Iodine	 See Table 15.0-14. See Table 15.0-14.
Fission product gap fraction: I-131 Kr-85 Other noble gases (Xe & Kr) Other iodine	 See Table 15.0-8. See Table 15.0-8. See Table 15.0-8. See Table 15.0-8.
Number of fuel assemblies in core	257
Amount of fuel damaged	1 assembly
Maximum rod radial peaking factor	1.78
Water decontamination factor for iodine	200
Release duration (h)	2
~~Control room envelope~~ Envelope volume ~~(including MCR)~~	See Table 15.6.5-5.
Occupancy frequency	See Table 15.6.5-5.
Total unfiltered inleakage	See Table 15.6.5-5.
~~Main control room~~ HVAC system	See Table 15.6.5-5.
χ/Q	See Table 15.0-13 and 15A-23.
Breathing rate	See Table 15.0-13.
Dose conversion factors	See Table 15.0-14.

Table 15.7.4-2
Radiological Consequences of Fuel Handling Accident

Dose Location	TEDE Dose (rem)
EAB (0 to 2 hours)	3.3
LPZ outer boundary	1.4
MCR (Occurred in fuel handling area) *1	0.69
TSC (Occurred in fuel handling area)	Less than MCR LOCA dose
MCR (Occurred in containment) *1	3.4
TSC (Occurred in containment)	Less than MCR LOCA dose

Note:
*1 The direct radiation shine dose at the time of LOCA is added as a direct radiation shine dose.

described in Tables 15A-15 and 15A-16.

15A.1.2 Airborne Radioactivity Removal Coefficients

The following material was taken from References 15A.5-3 and 15A.5-4, and is applicable to the US-APWR. Airborne radioactivity removal is also discussed in Section 6.5.2.

15A.1.2.1 Elemental iodine removal by wall deposition

The removal of elemental iodine by wall deposition can be estimated by the equation:

$$\lambda_w = K_w A/V$$

where:

λ_w = first-order removal coefficient by wall deposition
A = wetted-surface area
V = containment building net free volume
K_w = a mass-transfer coefficient (all available experimental data are conservatively bounded if K_w is taken to be 4.9 meters per hour)

For the US-APWR, A = 6230 m^2, V= 81000 m^3. Therefore, λ_w = 0.376 hr^{-1}.

The iodine decontamination factor (DF) is defined as the maximum iodine concentration in the containment atmosphere divided by the concentration of iodine in the containment atmosphere at some time after decontamination. The effectiveness of the wall deposition in removing elemental iodine is presumed to end when the maximum elemental iodine DF is reached. DF for the containment atmosphere achieved by the wall deposition is time dependent and is determined based on NUREG-0800, SRP 6.5.2 (Ref. 15A.5-3). The DF cannot exceed 200.

15A.1.2.2 Particulate removal

The first-order removal coefficient for particulates, λp, can be determined by the method described in Reference 15A.5-3, or estimated by:

$$\lambda_p = \frac{3hFE}{2VD}$$

where:

h = spray drop fall height
V = containment building net free volume
F = spray flow
E/D = ratio of a dimensionless collection efficiency E to the average spray drop diameter D. Since the removal of particulate material chiefly depends on the relative sizes of the particles and the spray drops, it is convenient to combine parameters that cannot be known. It is conservative to assume E/D to be 10 per meter initially (i.e., 1% efficiency for spray drops of 1 millimeter in diameter), changing abruptly to 1 spray drop per meter after the aerosol mass has been depleted by a

of postulated accidents are listed in Table 15A-17.

The MCR and TSC χ/Q values for the different required time intervals are listed by design basis accident event in Tables 15A-18 through 15A-23. The locations of the potential release points and their relationship to the MCR air intake and inleak are shown in Figure 15A-1.

15A.2 Dose Computation Model

RADTRAD code can track the transport of radionuclides as they are released from the reactor vessel, travel through the containment and other buildings, and are released to the environment. Leakage path of each accident is modeled as follows.

15A.2.1 LOCA Dose Computation Model

Following a postulated LOCA, the release of radioactivity from the containment to the environment with containment spray and engineered safety features (ESF) systems in full operation. The release due to the containment leakage and the recirculation water leakage from ESF systems is considered. The release from the containment takes into account a two-region spray model within the containment. The release from ESF systems pass filters of annulus emergency exhaust systems. Figure 15A-2 and Table 15A-24 show the leakage path and released activity during LOCA, respectively. For this accident, plant vent and containment releases to the environment are used.

15A.2.2 Steam System Piping Failure or Steam Generator Tube Rupture Dose Computation Model

Radioactivity leakage path to the environment due to steam system piping failure or steam generator tube rupture (SGTR) is direct and unfiltered. The activity release calculations for these accidents are complex involving spiking effects, time dependent flashing fractions, scrubbing of activities. Figure 15A-3 and Tables 15A-25 through 15A-28 show the leakage path and released activity during steam system piping failure or SGTR, respectively. For each accident, ground level release to the environment is used.

15A.2.3 Reactor Coolant Pump Rotor Seizure Dose Computation Model

Radioactivity leakage path to the environment due to reactor coolant pump (RCP) rotor seizure accident is similar to steam system piping failure or SGTR leakage path. The activity release calculations for this accident do not involve spiking effects which are considered in steam system piping failure or SGTR release calculations. Figure 15A-4 and Table 15A-29 show the leakage path and released activity during RCP rotor seizure event, respectively. For this accident, ground level release to the environment is used.

15A.2.4 Rod Ejection Accident Dose Computation Model

Radioactivity leakage paths to the environment due to rod ejection accident consist of the containment leakage and the secondary side leakages. The activity leakage paths for this accident are described in combination with the containment leakage path and the secondary leakage path. Figure 15A-5 and Table 15A-30 show the leakage paths and released activity during rod ejection accident, respectively. For this accident, plant vent

Table 15A-18

~~Main Control Room~~ ~~Main Control Room~~ MCR and TSC χ/Q for Steam System Piping Failure Analysis

Accidents		Steam system piping failure							
Sources		Steam line break releases				Main steam relief valve and safety valve releases			
Receptors		MCR		TSC		MCR		TSC	
		Intake	Inleak	Intake	Inleak	Intake	Inleak	Intake	Inleak
		MCR HVAC intake	MCR HVAC intake	TSC HVAC intake	TSC HVAC intake	Class 1E electrical room HVAC intake	Class 1E electrical room HVAC intake	TSC HVAC intake	TSC HVAC intake
Horizontal Distance (m)		17	17	67	67	24	24	60	60
Vertical Distance (m)		0	0	0	0	22	22	13	13
χ/Q (s/m^3)	0-8 hr	1.9×10^{-2}	1.9×10^{-2}	1.4×10^{-3}	1.4×10^{-3}	5.3×10^{-3}	5.3×10^{-3}	1.7×10^{-3}	1.7×10^{-3}
	8-24 hr	1.1×10^{-2}	1.1×10^{-2}	8.4×10^{-4}	8.4×10^{-4}	3.1×10^{-3}	3.1×10^{-3}	9.9×10^{-4}	9.9×10^{-4}
	24-96 hr	7.1×10^{-3}	7.1×10^{-3}	5.3×10^{-4}	5.3×10^{-4}	2.0×10^{-3}	2.0×10^{-3}	6.3×10^{-4}	6.3×10^{-4}
	96-720 hr	3.1×10^{-3}	3.1×10^{-3}	2.3×10^{-4}	2.3×10^{-4}	8.7×10^{-4}	8.7×10^{-4}	2.8×10^{-4}	2.8×10^{-4}

Table 15A-19
~~Main Control Room~~ ~~Main Control Room~~MCR and TSC χ/Q for RCP Rotor Seizure Analysis

Accidents		RCP rotor seizure accident			
Sources		Main steam relief valve and safety valve releases			
Receptors		MCR		TSC	
		Intake	Inleak	Intake	Inleak
		Class 1E electrical room HVAC intake	Class 1E electrical room HVAC intake	TSC HVAC intake	TSC HVAC intake
Horizontal Distance (m)		24	24	60	60
Vertical Distance (m)		22	22	13	13
χ/Q (s/m^3)	0-8 hr	5.3×10^{-3}	5.3×10^{-3}	1.7×10^{-3}	1.7×10^{-3}
	8-24 hr	3.1×10^{-3}	3.1×10^{-3}	9.9×10^{-4}	9.9×10^{-4}
	24-96 hr	2.0×10^{-3}	2.0×10^{-3}	6.3×10^{-4}	6.3×10^{-4}
	96-720 hr	8.7×10^{-4}	8.7×10^{-4}	2.8×10^{-4}	2.8×10^{-4}

Table 15A-20
Main Control Room Main Control RoomMDR and TSC χ/Q for Rod Ejection Accident Analysis (Sheet 1 of 2)

Accidents		Rod ejection accident			
Sources		Plant vent		Ground level containment release point	
Receptors		Intake	Inleak	Intake	Inleak
		MCR HVAC intake	Auxiliary building HVAC intake	MCRHVAC intake	Class 1E electrical room HVAC intake
Horizontal Distance (m)		56	55	32	27
Vertical Distance (m)		52	43	32	33
χ/Q (s/m^3)	0-8 hr	1.1×10^{-3}	1.4×10^{-3}	2.2×10^{-3}	2.4×10^{-3}
	8-24 hr	6.6×10^{-4}	8.0×10^{-4}	1.3×10^{-3}	1.4×10^{-3}
	24-96 hr	4.2×10^{-4}	5.1×10^{-4}	8.3×10^{-4}	9.1×10^{-4}
	96-720 hr	1.9×10^{-4}	2.2×10^{-4}	3.6×10^{-4}	4.0×10^{-4}

Accidents	Rod ejection accident							
Sources	Plant vent				Ground level containment release point			
Receptors	MCR		TSC		MCR		TSC	
	Intake	Inleak	Intake	Inleak	Intake	Inleak	Intake	Inleak
	MCR HVAC intake	Auxiliary building HVAC intake	TSC HVAC intake	TSC HVAC intake	MCR HVAC intake	Class 1E electrical room HVAC intake	TSC HVAC intake	TSC HVAC intake
Horizontal Distance	56	55	55	55	32	27	44	44

Table 15A-20
~~Main Control Room~~ ~~Main Control Room~~MCR and TSC χ/Q for Rod Ejection Accident Analysis (Sheet 2 of 2)

Accidents		Rod ejection accident			
Sources		Main steam relief valve and safety valve releases			
Receptors		MCR		TSC	
		Intake	Inleak	Intake	Inleak
		Class 1E electrical room HVAC intake	Class 1E electrical room HVAC intake	TSC HVAC intake	TSC HVAC intake
Horizontal Distance (m)		24	24	60	60
Vertical Distance (m)		22	22	13	13
χ/Q (s/m^3)	0-8 hr	5.3×10^{-3}	5.3×10^{-3}	1.7×10^{-3}	1.7×10^{-3}
	8-24 hr	3.1×10^{-3}	3.1×10^{-3}	9.9×10^{-4}	9.9×10^{-4}
	24-96 hr	2.0×10^{-3}	2.0×10^{-3}	6.3×10^{-4}	6.3×10^{-4}
	96-720 hr	8.7×10^{-4}	8.7×10^{-4}	2.8×10^{-4}	2.8×10^{-4}

Table 15A-21
~~Main Control Room~~ ~~Main Control Room~~MCR and TSC χ/Q for Failure of Small Lines Carrying Primary Coolant Outside Containment and SGTR Analyses

Accidents		Failure of small lines carrying primary coolant outside containment				SGTR			
Sources		Auxiliary building (RCS sample line)				Main steam relief valve and safety valve releases			
Receptors		MCR		TSC		MCR		TSC	
		Intake	Inleak	Intake	Inleak	Intake	Inleak	Intake	Inleak
		MCR HVAC intake	Reactor building door	Access building door	Access building door	Class 1E electrical room HVAC intake	Class 1E electrical room HVAC intake	TSC HVAC intake	TSC HVAC intake
Horizontal Distance (m)		52	34	23	23	24	24	60	60
Vertical Distance (m)		7	0	0.9	0.9	22	22	13	13
χ/Q (s/m^3)	0-8 hr	2.2×10^{-3}	4.9×10^{-3}	1.0×10^{-2}	1.0×10^{-2}	5.3×10^{-3}	5.3×10^{-3}	1.7×10^{-3}	1.7×10^{-3}
	8-24 hr	1.3×10^{-3}	2.9×10^{-3}	6.2×10^{-3}	6.2×10^{-3}	3.1×10^{-3}	3.1×10^{-3}	9.9×10^{-4}	9.9×10^{-4}
	24-96 hr	8.4×10^{-4}	1.8×10^{-3}	3.9×10^{-3}	3.9×10^{-3}	2.0×10^{-3}	2.0×10^{-3}	6.3×10^{-4}	6.3×10^{-4}
	96-720 hr	3.7×10^{-4}	8.1×10^{-4}	1.7×10^{-3}	1.7×10^{-3}	8.7×10^{-4}	8.7×10^{-4}	2.8×10^{-4}	2.8×10^{-4}

Table 15A-22

~~Main Control Room~~ ~~Main Control Room~~MCR and TSC χ/Q for LOCA Analysis

~~Accidents~~		~~LOCA~~			
~~Sources~~		~~Plant vent~~		~~Ground level containment release point~~	
~~Receptors~~		~~Intake~~	~~Inleak~~	~~Intake~~	~~Inleak~~
		~~MCR HVAC intake~~	~~Reactor building door~~	~~MCR HVAC intake~~	~~Class 1E electrical room HVAC intake~~
~~Horizontal Distance (m)~~		~~56~~	~~37~~	~~32~~	~~27~~
~~Vertical Distance (m)~~		~~52~~	~~60~~	~~32~~	~~33~~
~~χ/Q (s/m^3)~~	~~0-8 hr~~	~~1.1×10^{-3}~~	~~1.3×10^{-3}~~	~~2.2×10^{-3}~~	~~2.4×10^{-3}~~
	~~8-24 hr~~	~~6.6×10^{-4}~~	~~7.7×10^{-4}~~	~~1.3×10^{-3}~~	~~1.4×10^{-3}~~
	~~24-96 hr~~	~~4.2×10^{-4}~~	~~4.9×10^{-4}~~	~~8.3×10^{-4}~~	~~9.1×10^{-4}~~
	~~96-720 hr~~	~~1.9×10^{-4}~~	~~2.2×10^{-4}~~	~~3.6×10^{-4}~~	~~4.0×10^{-4}~~

Accidents	LOCA							
Sources	Plant vent				Ground level containment release point			
Receptors	MCR		TSC		MCR		TSC	
	Intake	Inleak	Intake	Inleak	Intake	Inleak	Intake	Inleak
	MCR HVAC intake	Reactor building door	TSC HVAC intake	TSC HVAC intake	MCR HVAC intake	Class 1E electrical room HVAC intake	TSC HVAC intake	TSC HVAC intake
Horizontal Distance	56	37	55	55	32	27	44	44

(m)									
Vertical Distance (m)		52	60	43	43	32	33	22	22
χ/Q (s/m^3)	0-8 hr	1.1×10^{-3}	1.3×10^{-3}	1.4×10^{-3}	1.4×10^{-3}	2.2×10^{-3}	2.4×10^{-3}	1.9×10^{-3}	1.9×10^{-3}
	8-24 hr	6.6×10^{-4}	7.7×10^{-4}	8.0×10^{-4}	8.0×10^{-4}	1.3×10^{-3}	1.4×10^{-3}	1.1×10^{-3}	1.1×10^{-3}
	24-96 hr	4.2×10^{-4}	4.9×10^{-4}	5.1×10^{-4}	5.1×10^{-4}	8.3×10^{-4}	9.1×10^{-4}	7.2×10^{-4}	7.2×10^{-4}
	96-720 hr	1.9×10^{-4}	2.2×10^{-4}	2.2×10^{-4}	2.2×10^{-4}	3.6×10^{-4}	4.0×10^{-4}	3.2×10^{-4}	3.2×10^{-4}

Table 15A-23
~~Main Control Room~~ ~~Main Control Room~~MCR and TSC χ/Q for Fuel Handling Accident Analysis

~~Accidents~~		~~Fuel handling accident in the containment~~		~~Fuel handling accident in the fuel handling area~~	
~~Sources~~		~~Air lock of containment~~		~~Fuel handling area~~	
~~Receptors~~		~~Intake~~	~~Inleak~~	~~Intake~~	~~Inleak~~
		~~MCR HVAC intake~~	~~Class 1E electrical room HVAC intake~~	~~MCR HVAC intake~~	~~Class 1E electrical room HVAC intake~~
~~Horizontal Distance (m)~~		~~35~~	~~29~~	~~82~~	~~76~~
~~Vertical Distance (m)~~		~~5.2~~	~~5.8~~	~~8.5~~	~~8.5~~
~~χ/Q (s/m^3)~~	~~0-8 hr~~	~~4.7×10^{-3}~~	~~6.4×10^{-3}~~	~~9.9×10^{-4}~~	~~1.1×10^{-3}~~
	~~8-24 hr~~	~~2.8×10^{-3}~~	~~3.8×10^{-3}~~	~~5.9×10^{-4}~~	~~6.7×10^{-4}~~
	~~24-96 hr~~	~~1.8×10^{-3}~~	~~2.4×10^{-3}~~	~~3.7×10^{-4}~~	~~4.3×10^{-4}~~
	~~96-720 hr~~	~~7.7×10^{-4}~~	~~1.1×10^{-3}~~	~~1.6×10^{-4}~~	~~1.9×10^{-4}~~

Accidents	Fuel handling accident in the containment				Fuel handling accident in the fuel handling area			
Sources	Air lock of containment				Fuel handling area			
Receptors	MCR		TSC		MCR		TSC	
	Intake	Inleak	Intake	Inleak	Intake	Inleak	Intake	Inleak

		MCR HVAC intake	Class 1E electrical room HVAC intake	TSC HVAC intake	TSC HVAC intake	MCR HVAC intake	Class 1E electrical room HVAC intake	TSC HVAC intake	TSC HVAC intake
Horizontal Distance (m)		35	29	80	80	82	76	100	100
Vertical Distance (m)		5.2	5.8	0.6	0.6	8.5	8.5	17	17
χ/Q (s/m^3)	0-8 hr	4.7×10^{-3}	6.4×10^{-3}	1.0×10^{-3}	1.0×10^{-3}	9.9×10^{-4}	1.1×10^{-3}	6.7×10^{-4}	6.7×10^{-4}
	8-24 hr	2.8×10^{-3}	3.8×10^{-3}	6.2×10^{-4}	6.2×10^{-4}	5.9×10^{-4}	6.7×10^{-4}	3.9×10^{-4}	3.9×10^{-4}
	24-96 hr	1.8×10^{-3}	2.4×10^{-3}	3.9×10^{-4}	3.9×10^{-4}	3.7×10^{-4}	4.3×10^{-4}	2.5×10^{-4}	2.5×10^{-4}
	96-720 hr	7.7×10^{-4}	1.1×10^{-3}	1.7×10^{-4}	1.7×10^{-4}	1.6×10^{-4}	1.9×10^{-4}	1.1×10^{-4}	1.1×10^{-4}

⬡ Sources

1. Containment shell to class 1E electrical HVAC intake (as diffuse area source)
2. Containment shell to main control room HVAC intake (as diffuse area source)
3. Containment shell to auxiliary building HVAC intake and technical support center HVAC intake (as diffuse area source)
4. Main steam line
5. Main steam relief valve and safety valve
6. Fuel handling area
7. Plant vent
8. Sampling system line
9. Air lock
10. Equipment hatch

△ Receptors

a. Main control room HVAC intake
b. Reactor building door
c. Auxiliary building HVAC intake
d. Class 1E electrical room HVAC intake
e. Technical support center HVAC intake
f. Access building door

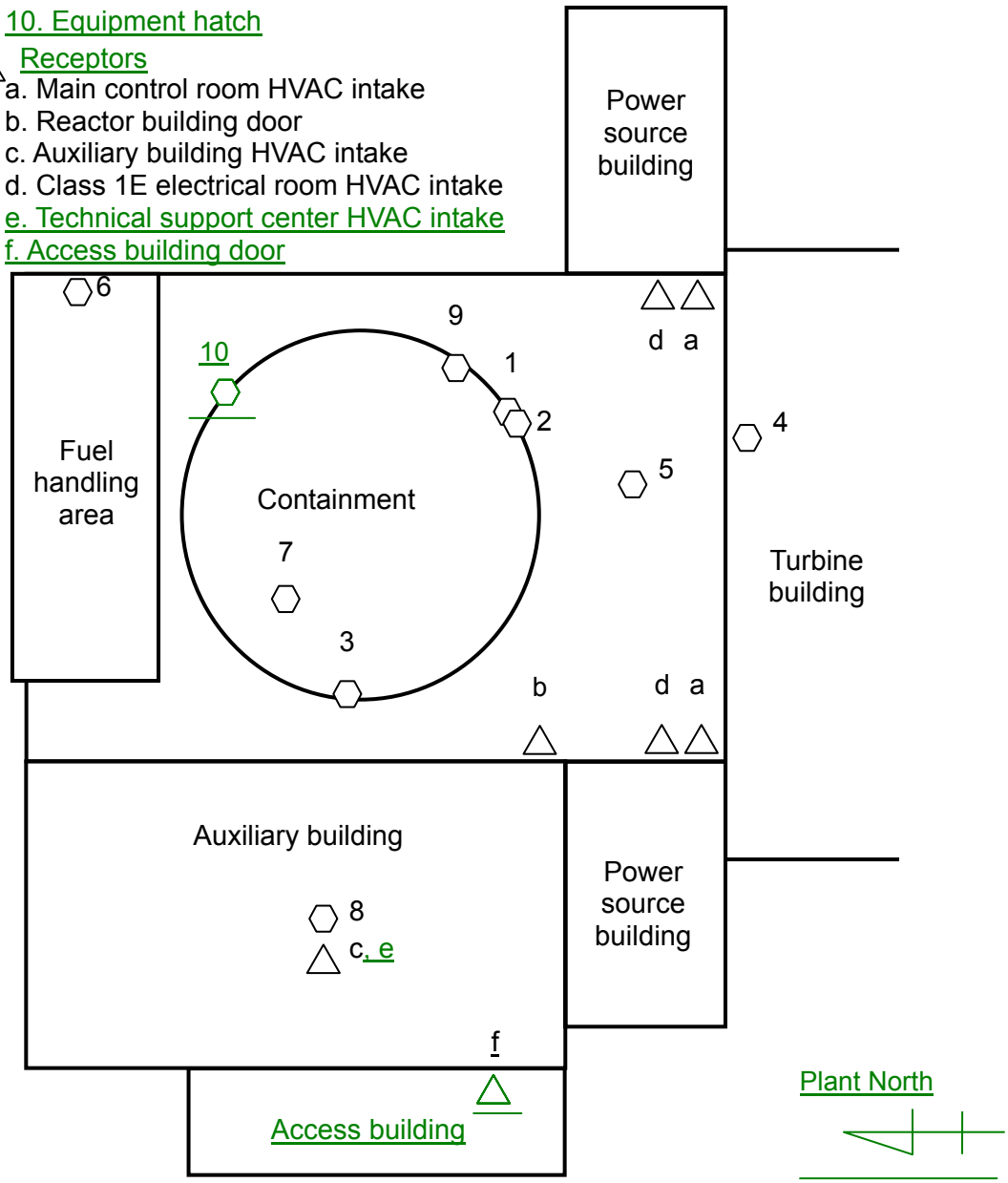

Figure 15A-1 Site Plan with Release and Intake Locations

Chapter 16

SURVEILLANCE REQUIREMENTS (continued)

SURVEILLANCE		FREQUENCY
SR 3.8.1.12	----------NOTE---------- This Surveillance shall not normally be performed in MODE 1 or 2. However, this Surveillance may be performed to reestablish OPERABILITY provided an assessment determines the safety of the plant is maintained or enhanced. Credit may be taken for unplanned events that satisfy this SR. ---------- Verify each Class 1E GTG's noncritical automatic trips are bypassed on actual or simulated loss of voltage signal on the emergency bus concurrent with an actual or simulated ESF actuation signal. a. Overspeed b. Generator differential current, and c. High exhaust gas temperature	[24 months OR In accordance with the Surveillance Frequency Control Program]

Tier 1

Table 2.7.5.1-3 Main Control Room HVAC System Inspections, Tests, Analyses, and Acceptance Criteria (Sheet 1 of 3)

Design Commitment	Inspections, Tests, Analyses	Acceptance Criteria
1.a The functional arrangement of the MCR HVAC system is as described in the Design Description of this Subsection 2.7.5.1.1 and as shown in Figure 2.7.5.1-1.	1.a An inspection of the as-built system will be performed.	1.a The as-built MCR HVAC system conforms with the functional arrangement as described in the Design Description of this Subsection 2.7.5.1.1 and as shown in Figure 2.7.5.1-1.
1.b Each mechanical division of the MCR air handling units (Division A, B, C & D) is physically separated from the other divisions.	1.b Inspections of the as-built MCR HVAC system will be performed.	1.b Each mechanical division of the as-built MCR air handling unit is physically separated from other mechanical divisions by structural and/or fire barriers.
2. The seismic Category I equipment, identified in Table 2.7.5.1-1, is designed to withstand seismic design basis loads without loss of safety function.	2.a Inspections will be performed to verify that the as-built seismic Category I equipment identified in Table 2.7.5.1-1 is located in the reactor building.	2.a The as-built seismic Category I equipment identified in Table 2.7.5.1-1 is located in the reactor building.
	2.b Type tests and/or analyses of the seismic Category I equipment will be performed.	2.b The results of the type tests and/or analyses conclude that the seismic Category I equipment can withstand seismic design basis loads without loss of safety function.
	2.c Inspection will be performed on the as-built equipment including anchorage.	2.c The as-built equipment including anchorage is seismically bounded by the tested or analyzed conditions.
3.a The Class 1E components, identified in Table 2.7.5.1-1, are powered from their respective Class 1E division.	3.a A test will be performed on the as-built MCR HVAC system by providing a simulated test signal in each Class 1E division.	3.a The simulated test signal exists ~~only~~ at the as-built Class 1E equipment identified in Table 2.7.5.1-1 under test in the as-built MCR HVAC system.
3.b Separation is provided between Class 1E divisions, and between Class 1E divisions and non-Class 1E cable.	3.b Inspections of the as-built Class 1E divisional cables and raceways will be performed.	3.b The as-built Class 1E electrical cables with only one division are routed in raceways assigned to the same division. There are no other safety division electrical cables in a raceway assigned to a different division.

DCD_14.03.07.03.06-4
DCD_14.03.07.03.06-23

Table 2.7.5.2-3 Engineered Safety Features Ventilation System Inspections, Tests, Analyses, and Acceptance Criteria (Sheet 2 of 3)

Design Commitment	Inspections, Tests, Analyses	Acceptance Criteria
4.a The ESFVS provides conditioning air to maintain the proper environmental conditions within the respective area.	4.a Tests of the as-built ESFVS will be performed on all 4 divisions.	4.a Each division of t~~T~~he as-built ESFVS provides conditioning air to maintain the proper environmental condition within the respective area.
4.b The Annulus Emergency Exhaust System is capable of meeting the selected numerical performance values used in the safety analysis listed in Section 2.7.5.2.1.	4.b.i Type tests, tests and analyses of filter efficiencies for the Annulus Emergency Exhaust System will be performed on both divisions.	4.b.i The Annulus Emergency Exhaust System is capable of meeting the filter efficiencies identified in this Subsection 2.7.5.2.1.1 on both divisions.
	4.b.ii A Test of negative pressure arrival time for the as-built Annulus Emergency Exhaust System will be performed on both divisions.	4.b.ii The as-built Annulus Emergency Exhaust System is capable of of drawing down all four penetration areas and all four safeguard component areas to the design basis value (i.e. negative pressure) within the arrival time identified in Subsection 2.7.5.2.1.1~~meeting the negative pressure arrival time identified in this Subsection 2.7.5.1.1~~ on both divisions.
5.a The remotely operated dampers identified in Table 2.7.5.2-1 perform an active safety-related function to change position as indicated in the table.	5.a Tests of the as-built remotely operated dampers identified in Table 2.7.5.2-1 will be performed.	5.a Each as-built remotely operated dampers identified in Table 2.7.5.2-1 perform the active function identified in the table after receiving a signal.
5.b After loss of motive power, the remotely operated dampers, identified in Table 2.7.5.2-1, assume the indicated loss of motive power position.	5.b Tests of the as-built remotely operated dampers will be performed under the conditions of loss of motive power.	5.b Upon loss of motive power, each as-built remotely operated damper identified in Table 2.7.5.2-1 assumes the indicated loss of motive power position.
6.a. Controls exist in the MCR to start and stop the ESFVS air handling units and filtration units identified in Table 2.7.5.2-2.	6.a. Tests will be performed on the as-built air handling units and filtration units identified in Table 2.7.5.2-2 using controls in the as-built MCR.	6.a Controls in the as-built MCR operate to start and stop the as-built air handling units and filtration units identified in Table 2.7.5.2-2.

Table 2.7.5.4-2 Auxiliary Building Ventilation System Inspections, Tests, Analyses, and Acceptance Criteria (Sheet 1 of 2)

Design Commitment	Inspections, Tests, Analyses	Acceptance Criteria
1. The functional arrangement of the ABVS is as described in the Design Description of this Subsection 2.7.5.4.1.	1. Inspections of the as-built ABVS will be performed.	1. The as-built ABVS conforms with the functional arrangement as described in Design Description of this Subsection 2.7.5.4.1.
2. The seismic Category I auxiliary building HVAC system isolation dampers identified in Table 2.7.5.4-1 are designed to withstand seismic design basis loads without loss of safety function.	2.a Inspections will be performed to verify that the as-built seismic Category I isolation dampers identified in Table 2.7.5.4-1 are located in the reactor building.	2.a The as-built seismic Category I isolation dampers identified in Table 2.7.5.4-1 are located in the reactor building.
	2.b Type tests and/or analyses of the seismic Category I isolation dampers will be performed.	2.b The result of the type tests and/or analyses concludes that the seismic Category I isolation dampers can withstand seismic design basis loads without loss of safety function.
	2.c Inspections will be performed on the as-built isolation dampers including anchorage.	2.c The as-built isolation dampers including anchorage are seismically bounded by the tested or analyzed conditions.
3.a The Class 1E Isolation dampers identified in Table 2.7.5.4-1 are powered from their respective Class 1E division.	3.a A test will be performed on the as-built auxiliary building HVAC system isolation dampers by providing a simulated test signal in each Class 1E division.	3.a The simulated test signal exists ~~only~~ at the as-built Class 1E equipment identified in Table 2.7.5.4-1 under test in the as-built MCR HVAC system.~~isolation dampers identified in Table 2.7.5.4-1 under test in the as-built auxiliary building HVAC system.~~
3.b. Separation is provided between Class 1E divisions, and between Class 1E divisions and non-Class 1E cable.	3.b Inspections of the as-built Class 1E divisional cables and raceways will be performed.	3.b The as-built Class 1E electrical cables with only one division are routed in raceways assigned to the same division. There are no other safety division electrical cables in a raceway assigned to a different division.

DCD_14.03.11-11
DCD_14.03.11-12

Table 2.11.1-2 Containment Vessel Inspections, Tests, Analyses, and Acceptance Criteria

Design Commitment	Inspections, Tests, Analyses	Acceptance Criteria
1. The PCCV pressure boundary is designed to meet ASME Code, Section III requirements.	1. Refer to Section 2.2 ITAAC.	1. Refer to Section 2.2 ITAAC.
2. The PCCV retains structural integrity under design pressures of 68 psig.	2. Refer to Section 2.2 ITAAC.	2. Refer to Section 2.2 ITAAC.
3. The PCCV structural configuration is as shown in Table 2.2-2, Figures 2.2-3 through 2.2-11 and Figure 2.11.1-1.	3. Inspections of the as built PCCV will be performed.	3. The as-built PCCV configuration is reconciled with descriptions in Table 2.2-2, Figures 2.2-3 through 2.2-11 and Figure 2.11.1-1.
4. The drain line to the reactor cavity exists that meets severe accident analysis requirements.	4. Inspections of the as-built drain line to the reactor will be performed.	4. The as-built drain line to the reactor cavity exists that meets severe accident analysis requirements.
5. The reactor cavity includes a core debris trap that meets severe accident analysis requirements..	5. Inspections of the as-built reactor cavity will be performed.	5. The core debris trap exists in the as-built reactor cavity that meets severe accident analysis requirements.
6. The reactor cavity includes the sufficient floor area and appropriate depth that meets severe accident analysis requirements..	6. Inspections of the as-built reactor cavity will be performed.	6. The sufficient floor area and appropriate depth exists in the as-built reactor cavity that meets severe accident analysis requirements.
7. The reactor cavity includes a cover concrete on the PCCV liner plate that meets severe accident analysis requirements..	7. Inspections of the as-built reactor cavity will be performed.	7. The cover concrete on the PCCV liner plate exists in the as-built reactor cavity that meets severe accident analysis requirements.

Table 2.11.2-1 Containment Isolation System Equipment Characteristics (Sheet 3 of 4)

System Name	Tag No.	ASME Code Section III Class	Seismic Category I	Remotely Operated Valve	Class 1E/ Qual. For Harsh Envir.	Safety-Related Display	Control PSMS	Active Safety Function	Loss of Motive Power Position
FSS	FSS-AOV-001	2	Yes	Yes	Yes/No	Yes	Yes	Transfer Closed	Closed
FSS	FSS-VLV-006	2	Yes	No	-/-	No	No	-	-
FSS	FSS-MOV-004	2	Yes	Yes	Yes/No	Yes	No	-	As Is
SSAS	CAS-VLV-103	2	Yes	No	-/-	No	No	-	-
SSAS	CAS-VLV-101	2	Yes	No	-/-	No	No	-	-
CVVS	VCS-AOV-306	2	Yes	Yes	Yes/Yes	Yes	Yes	Transfer Closed	Closed
CVVS	VCS-AOV-307	2	Yes	Yes	Yes/No	Yes	Yes	Transfer Closed	Closed
CVVS	VCS-AOV-305	2	Yes	Yes	Yes/Yes	Yes	Yes	Transfer Closed	Closed
CVVS	VCS-AOV-304	2	Yes	Yes	Yes/No	Yes	Yes	Transfer Closed	Closed
CVVS	VCS-AOV-356	2	Yes	Yes	Yes/Yes	Yes	Yes	Transfer Closed	Closed
CVVS	VCS-AOV-357	2	Yes	Yes	Yes/No	Yes	Yes	Transfer Closed	Closed
CVVS	VCS-AOV-355	2	Yes	Yes	Yes/Yes	Yes	Yes	Transfer Closed	Closed
CVVS	VCS-AOV-354	2	Yes	Yes	Yes/No	Yes	Yes	Transfer Closed	Closed
CWS	VCS-PT-2390,2391	-	Yes	-	Yes/Yes	No	No	-	-

Table 2.11.2-2 Containment Isolation System Inspections, Tests, Analyses, and Acceptance Criteria (Sheet 4 of 4)

Design Commitment	Inspections, Tests, Analyses	Acceptance Criteria
12. The motor-operated, air-operated and check valves, identified in Table 2.11.2-1 to performed an active safety-related, function to change position as indicated in the table.	12.a Tests or type tests of motor-operated and air-operated valves will be performed that demonstrate the capability of the valve to operate under its design conditions.	12. Each motor-operated and air-operated valves changes position as indicated in Table 2.11.2-1 under design conditions.
	12.b Tests of the as-built motor-operated and air-operated valves will be performed under pre-operational flow, differential pressure, and temperature conditions.	12.b Each as-built motor-operated and air-operated valves changes position as indicated in Table 2.11.2-1 under pre-operational test conditions.
	12.c Tests of the as-built check valves with active safety functions identified in Table 2.11.2-1 will be performed under pre-operational test pressure, temperature, and fluid flow conditions.	12.c Each as-built check valve change position as indicated in Table 2.11.2-1.
13. After loss of motive power, the remotely operated valves, identified in Table 2.11.2-1, assume the indicated loss of motive power position.	13. Tests of the as-built valves will be performed under the conditions of loss of motive power	13. Upon loss of motive power, each as-built remotely operated valve identified in Table 2.11.2-1 assumes the indicated loss of motive power position.

Table 2.11.3-5 Containment Spray System Inspections, Tests, Analyses, and Acceptance Criteria (Sheet 2 of 5)

Design Commitment		Inspections, Tests, Analyses		Acceptance Criteria	
4.a	The ASME Code Section III components, identified in Table 2.11.3-2, retain their pressure boundary integrity at their design pressure.	4.a	A hydrostatic test will be performed on the as-built components required by the ASME Code Section III to be hydrostatically tested.	4.a	The results of the hydrostatic test of the as-built components identified in Table 2.4.4-2 as ASME Code Section III conform with the requirements of the ASME Code Section III.
4.b	The ASME Code Section III piping, identified in Table 2.11.3-3, retains its pressure boundary integrity at its design pressure.	4.b	A hydrostatic test will be performed on the as-built piping required by the ASME Code Section III to be hydrostatically tested.	4.b	The results of the hydrostatic test of the as-built piping identified in Table 2.11.3-3 as ASME Code Section III conform with the requirements of the ASME Code Section III.
5.a	The seismic Category I equipment, identified in Table 2.11.3-2, can withstand seismic design basis loads without loss of safety function.	5.a.i	Inspections will be performed to verify that the seismic Category I as-built equipment identified in Table 2.11.3-1 are located in the Containment and Reactor Building.	5.a.i	The seismic Category I as-built equipment identified in Table 2.11.3-2 is located in the Containment and Reactor Building.
		5.a.ii	Type tests and/or analyses of seismic Category I equipment will be performed.	5.a.ii	The results of the type tests and/or analyses concludes that the seismic Category I equipment can withstand seismic design basis loads without loss of safety function.
		5.a.iii	Inspections will be performed on the as-built equipment including anchorage.	5.a.iii	The as-built equipment including anchorage is seismically bounded by the tested or analyzed conditions.
5.b	Each of the seismic category lines identified in Table 2.11.3-3 is designed to withstand combined normal and seismic design basis loads without a loss of its functional capability.	5.b	Inspections will be performed on the as-built piping.	5.b	Each of the as-built seismic category piping identified in Table 2.~~3~~11.~~11~~3-3 meets the seismic category requirements.

Table 2.11.3-5 Containment Spray System Inspections, Tests, Analyses, and Acceptance Criteria (Sheet 4 of 5)

Design Commitment		Inspections, Tests, Analyses		Acceptance Criteria	
7.c	The CS/RHR pumps have sufficient net positive suction head (NPSH).	7.c	Tests to measure the as-built CS/RHR pump suction pressure will be performed. Inspection and analysis to determine NPSH available to each safety injection pump will be performed.	7.c	The as-built system meets the design, and the analysis confirms that the NPSH available is at least 17.9 feet at 3650 gpm.
8.	Controls exist in the MCR to open and close the remotely operated valves identified in Table 2.11.3-2..	8.	Tests will be performed on the as-built remotely operated valves listed in Table 2.11.3-2 using controls in the MCR.	8.	Controls in the MCR operate to open and close the as-built remotely operated valves listed in Table 2.11.3-2.
9.a	The motor-operated and check valves, identified in Table 2.11.3-2 to perform an active safety-related, function to change position as indicated in the table.	9.a.i	Tests or type tests of motor-operated valves will be performed that demonstrate the capability of the valve to operate under its design conditions.	9.a.i	Each motor-operated valve changes position as indicated in Table 2.11.3-2 under design conditions.
		9.a.ii	Tests of the as-built motor-operated valves will be performed under pre-operational flow, differential pressure, and temperature conditions.	9.a.ii	Each as-built motor-operated valve changes position as indicated in Table 2.11.3-2 under pre-operational test conditions.
		9.a.iii	Test of the as-built check valves with active safety functions identified in Table 2.11.3-2 will be performed under pre-operational test pressure, temperature, and fluid flow conditions.	9.a.iii	Each as-built check valve changes position as indicated in Table 2.11.3-2.
9.b	After loss of motive power, the remotely operated valves, identified in Table 2.~~9~~11.3-2, assume the indicated loss of motive power position.	9.b.	Tests of the as-built valves will be performed under the conditions of loss of motive power.	9.b	Upon loss of motive power, each as-built remotely operated valve identified in Table 2.~~9~~11.3-2 assumes the indicated loss of motive power position.
10.a	The CS/RHR pump starts after receiving a signal.	10.a	Tests of the as-built CS/RHR pump will be performed using simulated signals.	10.a	The as-built CS/RHR pump starts after receiving a signal.

2.11.4 Containment Hydrogen Monitoring and Control System (CHS)

2.11.4.1 Design Description

System Purpose and Functions

The CHS is non safety-related system. The purpose of the CHS is to continuously monitor hydrogen concentration within the containment and to reduce the concentration of this combustible gas. The potential for hydrogen gas to be generated may arise from an accident that is more severe than a postulated design-basis accident (DBA).

Location and Functional Arrangement

There are 20 igniters strategically located in containment areas and subcompartments where hydrogen may be produced, transit or collect.~~The igniters are located within the containment.~~ The hydrogen detector is located outside of containment and measures hydrogen concentration in containment air extracted from the containment. The CHS includes a single hydrogen monitor and a set of igniters.

Key Design Features

The CHS consists of the hydrogen monitoring system and the hydrogen ignition system. The hydrogen monitoring system consists of a single hydrogen detector. The hydrogen ignition system consists of 20 igniters installed inside the containment,~~a set of igniters~~ designed to burn hydrogen continuously at a low concentration. The hydrogen igniters burn off hydrogen starting at the low flammability limit (approximately 10% hydrogen in air), thereby preventing further hydrogen accumulation that could become a threat to containment integrity.

Seismic and ASME Code Classifications

The CHS is not designed for seismic Category I requirements. The components of the CHS are not designed or constructed to ASME Code Section III requirements.

System Operation

The CHS operates during accident conditions.

Alarms, Displays, and Controls

The following CHS variables are monitored in the MCR:

- Display of hydrogen concentration.
- Display of hydrogen igniter status.

Logic

There is no logic needed for direct safety functions related to the CHS.

3.0 INTERFACE REQUIREMENTS

3.1 Design Description

This section identifies the safety significant interfaces between the US-APWR standard plant design and the Combined License (COL) applicant.

The US-APWR standard plant design consists of several buildings (reactor building including the prestressed concrete containment vessel and containment internal structure, power source buildings, auxiliary building, turbine building and access building); the equipment located in those buildings, and structures (power source fuel storage vaults and essential service water pipe tunnel). As allowed by the regulations, conceptual designs for systems that are not part of the US-APWR standard design are included in the DCD for purposes of allowing the NRC to evaluate the overall acceptability of the design. However, the final details of these conceptual designs are subject to change due to site-specific conditions.

An interface requirement as specified in this section is the portion of a system that must be added to the standard design package to complete the design of the US-APWR at a specific site.

3.2 Interface Requirements

Ultimate Heat Sink

Ultimate heat sink (UHS) is a safety-related system and is site-specific. The maximum supply water temperature is 95 °F under the peak heat loads condition to provide sufficient cooling capacity to ESWS.

The UHS keeps the water level at a net positive suction head (NPSH) greater than the pump's required NPSH.

Fire Protection System

The seismic standpipe system can be supplied from a safety-related water source which capacity is at least 18,000 gallons.

Offsite Power System

Offsite power system is site-specific. Two offsite power system circuits are physically independent and separated. Each offsite power system equipment circuit is sized in accordance with load conditions during steady state, transient, and postulated events and accident conditions. The independence and separation of the offsite circuits and onsite class 1E electrical system and components are achieved. The appropriate lightning protection and grounding features for the system and components of the offsite circuits from the transmission network (TN) to the safety buses are included in the design.