HOLTEC INTERNATIONAL

Holtec Center, 555 Lincoln Drive West, Marlton, NJ 08053
Telephone (856) 797-0900
Fax (856) 797-0909

March 9, 2009

U.S. Nuclear Regulatory Commission
ATTN: Document Control Desk
Washington, DC 20555-0001

Reference:
1. Docket No. 71-9325, TAC No. L24304 (HI-STAR 180 Model)
2. Holtec Letter 1553024-NRC, dated January 20, 2009
3. Holtec Letter 1553026-NRC, dated February 19, 2009

Subject: Transmittal of Holtec Report HI-2073681 (Non-Proprietary)

Dear Mr. Saverot:

Attachment 1 to this letter is a non-proprietary version of Holtec report HI-2073681, Revision 2 (with Supplement A) to support the license application of the HI-STAR 180 Transport Package. The proprietary version of this report was previously submitted as referenced in [2] and [3] above.

Sincerely,

Luis E. Hinojosa
Project Manager, HI-STAR 180 Licensing
Holtec International

Attachments:
Holtec Report 2073681, Revision 2 with Supplement A (Non-Proprietary) – 472 total pages

cc (with attached): Mr. Pierre Saverot, Project Manager, NRC, NMSS, SFST
cc (without attached): Mr. Pierre Monsigny
cc (without attached): Holtec Groups

NMSS01

HOLTEC INTERNATIONAL COPYRIGHTED MATERIAL

NON-PROPRIETARY VERSION

SAFETY ANALYSIS REPORT on THE HI-STAR 180 PACKAGE

(Revision 2 with Supplement A)

by

Holtec International
Holtec Center
555 Lincoln Drive West
Marlton, NJ 08053, USA
(www.holtecinternational.com)

USNRC Docket No. : 71-9325
Holtec Report No. : HI-2073681
Quality Designation : Safety Significant*

NON-PROPRIETARY VERSION

Copyright Notice

This document is a copyrighted intellectual property of Holtec International. All rights reserved. Excerpting any part of this document, except for public domain citations included herein, by any person or entity except for the USNRC, a Holtec User Group (HUG) member company, or a foreign regulatory authority with jurisdiction over a HUG member's nuclear facility without written consent of Holtec International is unlawful.

* The safety designation is pursuant to Holtec International's Quality Assurance Program.

HOLTEC INTERNATIONAL COPYRIGHTED MATERIAL

TABLE OF CONTENTS

TOC T1

GLOSSARY AND NOTATIONS G1

CHAPTER 1: GENERAL INFORMATION

1.0 GENERAL INFORMATION 1.0-1

1.1 INTRODUCTION 1.1-1

1.2 PACKAGE DESCRIPTION 1.2-1

1.3 ENGINEERING DRAWINGS 1.3-1

1.4 SUMMARY OF COMPLIANCE WITH 10CFR71 REQUIREMENTS 1.4-1

1.5 REFERENCES 1.5-1

Appendix 1.A:
Appendix 1.B:

CHAPTER 2: STRUCTURAL EVALUATION

2.0 INTRODUCTION 2.0-1

2.1 STRUCTURAL DESIGN. 2.1-1

2.2 MATERIALS 2.2-1

2.3 FABRICATION AND EXAMINATION 2.3-1

2.4 GENERAL REQUIREMENTS 2.4-1

2.5 LIFTING AND TIE-DOWN STANDARDS 2.5-1

2.6 NORMAL CONDITIONS OF TRANSPORT 2.6-1

HOLTEC INTERNATIONAL COPYRIGHTED MATERIAL

TABLE OF CONTENTS (continued)

2.7 HYPOTHETICAL ACCIDENT CONDITIONS 2.7-1

2.8 ACCIDENT CONDITIONS FOR AIR TRANSPORT OF PLUTONIUM 2.8-1

2.9 ACCIDENT CONDITIONS FOR FISSILE MATERIALS FOR AIR TRANSPORT. 2.9-1

2.10 SPECIAL FORM 2.10-1

2.11 FUEL RODS 2.11-1

2.12 REFERENCES 2.12-1

Appendix 2.A:
Appendix 2.B:

CHAPTER 3: THERMAL EVALUATION

3.0 INTRODUCTION 3.0-1

3.1 DESCRIPTION OF THERMAL DESIGN 3.1-1

3.2 MATERIAL PROPERTIES AND COMPONENT SPECIFICATIONS 3.2-1

3.3 THERMAL EVALUATION UNDER NORMAL CONDITIONS OF TRANSPORT 3.3-1

3.4 THERMAL EVALUATION UNDER HYPOTHETICAL ACCIDENT 3.4-1

3.5 REFERENCES 3.5-1

CHAPTER 4: CONTAINMENT

4.0 INTRODUCTION 4.0-1

4.1 DESCRIPTION OF THE CONTAINMENT SYSTEM 4.1-1

4.2 CONTAINMENT UNDER NORMAL CONDITIONS OF TRANSPORT 4.2-1

HOLTEC INTERNATIONAL COPYRIGHTED MATERIAL

TABLE OF CONTENTS (continued)

4.3 CONTAINMENT UNDER HYPOTHETICAL ACCIDENT CONDITIONS OF TRANSPORT 4.3-1

4.4 LEAKAGE RATE TESTS FOR TYPE B PACKAGES 4.4-1

4.5 REFERENCES 4.5-1

CHAPTER 5: SHIELDING EVALUATION

5.0 INTRODUCTION 5.0-1

5.1 DESCRIPTION OF SHIELDING DESIGN 5.1-1

5.2 SOURCE SPECIFICATION 5.2-1

5.3 SHIELDING MODEL 5.3-1

5.4 SHIELDING EVALUATION 5.4-1

5.5 REFERENCES 5.5-1

Appendix 5.A
Appendix 5.B
Appendix 5.C

CHAPTER 6: CRITICALITY EVALUATION

6.0 INTRODUCTION 6.0-1

6.1 DESCRIPTION OF CRITICALITY DESIGN 6.1-1

6.2 FISSILE MATERIAL CONTENT 6.2-1

6.3 GENERAL CONSIDERATIONS 6.3-1

6.4 SINGLE PACK EVALUATION 6.4-1

6.5 EVALUATION OF PACKAGE ARRAYS UNDER NORMAL CONDITIONS OF TRANSPORT 6.5-1

HOLTEC INTERNATIONAL COPYRIGHTED MATERIAL

TABLE OF CONTENTS (continued)

6.6 PACKAGE ARRAYS UNDER HYPOTHETICAL ACCIDENT CONDITIONS 6.6-1

6.7 FISSILE MATERIAL PACKAGES FOR AIR TRANSPORT 6.7-1

6.8 BENCHMARK EVALUATIONS 6.8-1

6.9 REFERENCES 6.9-1

Appendix 6.A:
Appendix 6.B:
Appendix 6.C:
Appendix 6.D:
Appendix 6.E:
Appendix 6.F:

CHAPTER 7: PACKAGE OPERATIONS

7.0 INTRODUCTION 7.0-1

7.1 PACKAGE LOADING 7.1-1

7.2 PACKAGE UNLOADING 7.2-1

7.3 PREPARATION OF EMPTY PACKAGE FOR TRANSPORT 7.3-1

7.4 OTHER OPERATIONS 7.4-1

7.5 REFERENCES 7.5-1

Appendix 7.A:

CHAPTER 8: ACCEPTANCE TESTS AND MAINTENANCE PROGRAM

8.0 INTRODUCTION 8.0-1

8.1 ACCEPTANCE TESTS 8.1-1

8.2 MAINTENANCE PROGRAM 8.2-1

8.3 REFERENCES 8.3-1

HOLTEC INTERNATIONAL COPYRIGHTED MATERIAL

GLOSSARY AND NOTATION

GLOSSARY

AFR is an acronym for Away From Reactor.

ALARA is an acronym for As Low As Reasonably Achievable.

AL-STAR is the trademark name of the impact limiter design used in the family of HI-STAR dual-purpose casks.

Basket Shims are aluminum alloy extrusions that serve to maintain the fuel basket coaxial with the cask's storage cavity.

BWR is an acronym for Boiling Water Reactor.

Cask is a generic term used to describe a device that is engineered to hold high level waste, including spent nuclear fuel, in a safe configuration.

C.G. is an acronym for Center of Gravity.

Closure Lid is a generic term to indicate a gasketed flat cover that bolts to the top flange of the cask.

Commercial Spent Fuel (CSF) refers to nuclear fuel used to produce energy in a commercial nuclear power plant.

Containment Boundary means the enclosure formed by the cask inner shell welded to a bottom plate and top flange plus [PROPRIETARY TEXT REMOVED].

Containment System means the assembly of containment components of the packaging intended to contain the radioactive material during transport.

Cooling Time (or post-irradiation decay time, PCDT) for a spent fuel assembly is the time between reactor shutdown and the time the spent fuel assembly is loaded into the cask. Cooling Time is also referred to as the "age" of the CSF.

Critical Characteristic means a feature of a component or assembly that is necessary for the component or assembly to render its intended function. Critical characteristics of a material are those attributes that have been identified, in the associated material specification, as necessary to render the material's intended function.

Criticality Safety Index (CSI) means the dimensionless number (rounded to up to the next tenth) assigned to and placed on the label of a fissile material package, to designate the degree of control of accumulation of packages containing fissile material during transportation.

Damaged Fuel Assembly is a fuel assembly with known or suspected cladding defects, as determined by a review of records, greater than pinhole leaks or hairline cracks, empty fuel rod locations that are not filled with dummy fuel rods, whose structural integrity has been impaired such that geometric rearrangement of fuel or gross failure of the cladding is expected based on engineering evaluations, or that cannot be handled by normal means. Also see fuel debris.

Damaged Fuel Container (or Canister) (DFC) means a specially designed vessel for damaged fuel or fuel debris, which may permit gaseous and liquid media to escape while minimizing dispersal of gross particulates or which may be hermetically sealed. The DFC features a lifting location, which is suitable for remote handling of a loaded or unloaded DFC.

DBE means Design Basis Earthquake.

DCSS is an acronym for Dry Cask Storage System.

Design Heat Load is the computed heat rejection capacity of the HI-STAR package with a specific fuel basket with CSF stored in uniform storage with the ambient at the normal temperature and the peak cladding temperature (PCT) at 400°C. The Design Heat Load is less than the thermal capacity of the system by a suitable margin that reflects the conservatism in the system thermal analysis.

Design Life is the minimum duration for which the component is engineered to perform its intended function if operated and maintained in accordance with the instructions provided by the system supplier.

Design Report is a document prepared, reviewed and QA validated in accordance with the provisions of Holtec's Quality Program. The Design Report shall demonstrate compliance with the requirements set forth in the Design Specification. A Design Report is mandatory for systems, structures, and components designated as *Important-to-Safety*. The SAR serves as the Design Report for the HI-STAR 180 package.

Design Specification is a document prepared in accordance with the quality assurance requirements of 10CFR71 Subpart H to provide a complete set of design criteria and functional requirements for a system, structure, or component, designated as *Important-to-Safety*. The SAR serves as the Design Specification for the HI-STAR 180 package.

Dose Blocker Parts means the shielding components installed outside the Containment Boundary to enable the cask to meet the dose requirements of 10CFR71 during transport.

Enclosure Vessel (or MPC Enclosure Vessel) (EV) means the pressure vessel defined by the cylindrical shell, baseplate, port cover plates, lid, closure ring, and associated welds that provides confinement for the helium gas contained within the MPC. The EV and the fuel basket together constitute the multi-purpose canister.

Exclusive use means the sole use by a single consignor of a conveyance for which all initial, intermediate, and final loading and unloading are carried out in accordance with the direction of the consignor or consignee. The consignor and the carrier must ensure that loading or unloading personnel have radiological training and resources appropriate for safe handling of the consignment. The consignor must issue specific instructions, in writing, for maintenance of exclusive use shipment controls, and include them with the shipping paper information provided to the carrier by the consignor.

[PROPRIETARY TEXT REMOVED]

[PROPRIETARY TEXT REMOVED]

Fracture Toughness is a material property, which is a measure of the ability of the material to limit crack propagation under a suddenly applied load.

FSAR is an acronym for Final Safety Analysis Report.

Fuel Basket means a honeycombed cavity structure with square openings that can accept a fuel assembly of the type for which it is designed.

Fuel Debris is ruptured fuel rods, severed rods and loose fuel pellets from damaged fuel assemblies, and fuel assemblies with known or suspected defects which cannot be handled by normal means due to fuel cladding damage, including containers and structures supporting these parts.

[PROPRIETARY TEXT REMOVED]

GTCC is an acronym for power reactor-related Greater Than Class C waste.

High Burnup Fuel (HBF) is a commercial spent fuel assembly with an average burnup greater than 45,000 MWD/MTU.

HI-STAR is a generic term used to denote the family of metal casks consisting of HI-STAR 60, HI-STAR 100, HI-STAR 180, and HI-STAR HB.

HI-STAR 180 Cask or cask means the cask that receives and contains the spent nuclear fuel. It provides the containment system boundary for radioactive materials and fulfills all requirements of 10CFR71 to merit certification as a B(U) package.

HI-STAR 180 Package consists of the HI-STAR 180 cask and fuel basket with two impact limiters installed at the extremities, a personnel barrier if required, and the licensed radioactive contents loaded for transport.

HI-STAR 180 Packaging consists of the HI-STAR 180 Package without the licensed radioactive contents loaded.

Holtite™ is the trade name for the neutron shielding materials used in the HI-STAR/HI-STORM family of casks.

Impact Limiters means a set of fully enclosed energy absorbers that are attached to the top and bottom of the cask during transport. The impact limiters are used to absorb kinetic energy resulting from normal and hypothetical accident drop conditions. The HI-STAR impact limiters are called AL-STAR.

Important-to-Safety (ITS) means a function or condition required to transport spent nuclear fuel safely; to prevent damage to spent nuclear fuel; and to provide reasonable assurance that spent nuclear fuel can be received, handled, packaged, transported, and retrieved without undue risk to the health and safety of the public.

Incore Grid Spacers are fuel assembly grid spacers located within the active fuel region (i.e., not including top and bottom spacers).

[PROPRIETARY TEXT REMOVED]

LLNL is an acronym for Lawrence Livermore National Laboratory.

Leaktight (is defined in this SAR to be same as defined in ANSI N14.5-1997) means a degree of package containment that in a practical sense precludes any significant release of radioactive materials. This degree of containment is achieved by demonstration of a leakage rate less than or equal to 1×10^{-7} ref-cm^3/s of air at an upstream pressure of 1 atmosphere absolute and a downstream pressure of 0.01 atmosphere absolute or less. Reference cubic centimeter per second (ref-cm^3/s) means a volume of one cubic centimeter of dry air per second at 1 atmosphere absolute pressure (760 mm Hg) and 25°C. Finally, 1×10^{-7} ref-cm^3/s air is equal to 4.09×10^{-12} gram-moles/s of dry air or helium and is approximately equivalent to 2×10^{-7} ref-cm^3/s helium.

License Life means the duration for which the system is authorized by virtue of its certification by the U.S. NRC.

Light Water Reactor (LWR): are nuclear reactors moderated by light water. Commercial LWRs typically utilize enriched uranium and/or the so-called MOX fuel for power generation.

Lowest Service Temperature (LST) is the minimum metal temperature of a part for the specified service condition.

Maximum Normal Operating Pressure (MNOP) means the maximum pressure that would develop in the containment system in a period of 1 year under the heat condition specified in 10CFR71.71(c)(1), in the absence of venting, external cooling by an ancillary system, or operational controls during transport.

Maximum Reactivity means the highest possible k-effective including bias, uncertainties, and calculational statistics evaluated for the worst-case combination of fuel basket manufacturing tolerances.

Metamic™ is a trade name for an aluminum/boron carbide composite neutron absorber material qualified for use in the HI-STAR/HI-STORM fuel baskets.

MGDS is an acronym for Mined Geological Depository System.

Minimum Enrichment is the minimum assembly average enrichment. Natural uranium blankets are not considered in determining minimum enrichment.

Moderate Burnup Fuel (MBF) is a commercial spent fuel assembly with an average burnup less than or equal to 45,000 MWD/MTU.

Moderator Exclusion means no moderator intrusion into the cask storage cavity under hypothetical accident conditions of transport.

Multi-Purpose Canister (MPC) means the sealed canister consisting of a honeycombed fuel basket for spent nuclear fuel storage, contained in a cylindrical canister shell (the MPC Enclosure Vessel).

NDT is an acronym for Nil Ductility Transition, which is defined as the temperature at which the fracture stress in a material with a small flaw is equal to the yield stress in the same material if it had no flaws.

Neutron Absorber Material is a generic term used in this SAR to indicate any neutron absorber material qualified for use in the HI-STAR/HI-STORM fuel basket.

Neutron Shielding means a material used to thermalize and capture neutrons emanating from the radioactive spent nuclear fuel.

Neutron Sources means specially designed inserts for fuel assemblies that produce neutrons for startup of the reactor.

Non-Fuel Hardware (NFH) means high-level waste not used to produce thermal energy in the reactor. Examples of NFH are Burnable Poison Rod Assemblies (BPRAs), Thimble Plug Devices (TPDs), Control Rod Assemblies (CRAs), Axial Power Shaping Rods (APSRs), Wet Annular Burnable Absorbers (WABAs), Rod Cluster Control Assemblies (RCCAs), Control Element Assemblies (CEAs),water displacement guide tube plugs, orifice rod assemblies, and vibration suppressor inserts.

Not-Important-to-Safety (NITS) is the term used where a function or condition is not deemed as *Important-to-Safety*. See the definition for *Important-to-Safety*.

O&M Manual is an abbreviation for operation and maintenance manual.

ORNL is an acronym for Oak Ridge National Laboratory

[PROPRIETARY TEXT REMOVED]

Overpack is an alternative term used to denote a cask that contains a basket with a separate enclosure vessel.

Planar-Average Initial Enrichment is the average of the distributed fuel rod initial enrichments within a given axial plane of the assembly lattice.

Post-Core Decay Time (PCDT) is synonymous with cooling time.

PWR is an acronym for Pressurized Water Reactor.

Reactivity is used synonymously with effective neutron multiplication factor or k-effective.

Regionalized Fuel Loading is a term used to describe an optional fuel loading strategy used in lieu of uniform fuel loading. Regionalized fuel loading allows higher heat emitting fuel assemblies to be stored in certain fuel storage locations provided lower heat emitting fuel assemblies are stored in other fuel storage locations.

SAR is an acronym for Safety Analysis Report.

Service Life means the duration for which the component is reasonably expected to perform its intended function, if operated and maintained in accordance with the provisions of this SAR. Service Life may be much longer than the Design Life because of the conservatism inherent in the codes, standards, and procedures used to design, fabricate, operate, and maintain the component.

Short-term Operations means those normal operational evolutions necessary to support fuel loading or fuel unloading operations.

Single Failure Proof means that the handling system is designed so that a single failure will not result in the loss of the capability of the system to safely retain the load. Single Failure Proof means that the handling system is designed so that all directly loaded tension and compression members are engineered to satisfy the enhanced safety criteria of Paragraphs 5.1.6(1)(a) and (b) of NUREG-0612.

SNF is an acronym for Spent Nuclear Fuel (also referred to as CSF in this SAR).

STP is Standard Temperature (298°K) and Pressure (1 atm) conditions.

SSC is an acronym for Structures, Systems and Components.

Surface Contaminated Object (SCO) means a solid object that is not itself classed as radioactive material, but which has radioactive material distributed on any of its surfaces. See 10CFR71.4 for surface activity limits and additional requirements.

Transport Index (TI) means the dimensionless number (rounded up to the next tenth) placed on the label of a package, to designate the degree of control to be exercised by the carrier during transportation. The transport index is determined as the number determined by multiplying the maximum radiation level in millisievert per hour at one meter (3.3 ft) from the external surface of the package by 100 (equivalent to the maximum radiation level in millirem per hour at one meter (3.3 ft)).

Transport Package consists of a HI-STAR Package with a set of support saddles, a personnel barrier and licensed radioactive contents loaded for transport. It excludes all lifting devices, tie-downs, longitudinal stops, rigging, transporters, welding machines, and auxiliary equipment (such as the drying and helium backfill system) used during fuel loading operations and preparation for off-site transportation.

Transport Packaging consists of a Transport Package without licensed radioactive contents loaded.

Uniform Fuel Loading is a fuel loading strategy where any authorized fuel assembly may be stored in any fuel storage location, subject to other restrictions in the CoC, such as those applicable to non-fuel hardware, and damaged fuel containers.

Undamaged Fuel Assembly is defined as a fuel assembly without known or suspected cladding defects greater than pinhole leaks and hairline cracks, and which can be handled by normal means. Fuel assemblies without fuel rods in fuel rod locations shall not be classified as Undamaged Fuel Assemblies unless dummy fuel rods are used to displace an amount of water greater than or equal to that displaced by the original fuel rod(s).

[PROPRIETARY TEXT REMOVED]

ZPA is an acronym for Zero Period Acceleration.

ZR means any zirconium-based fuel cladding material authorized for use in a commercial nuclear power plant reactor. Any reference to Zircaloy fuel cladding in this SAR applies to any zirconium-based fuel cladding material.

NOTATION

α Mean Coefficient of thermal expansion, cm/cm-°C x 10^{-6} (in/in-°F x 10^{-6})

d_{max}: Maximum predicted crush of the impact limiters in a package free drop event.

e: Elongation in percent (i.e., maximum tensile strain expressed in percentage at which the ASME Code test specimen will fail)

E Young's Modulus, MPa x 10^4 (psi x 10^6)

f: Factor-of-Safety (dimensionless)

m: Metric for bolted joint leakage (Table 2.6.1)

P_b Primary bending stress intensity

P_e Expansion stress

$P_L + P_b$ Either primary or local membrane plus primary bending

P_L Local membrane stress intensity

P_m Primary membrane stress intensity

Q Secondary stress

S_u Ultimate Stress, MPa (ksi)

S_y Yield Stress, MPa (ksi)

S_m Stress intensity values per ASME Code

T_c: Allowable fuel cladding temperature

T_p: Peak computed fuel cladding temperature

α_{max}: Maximum value measured or computed deceleration from a package drop event. α_{max} can be parallel or lateral to the centerline of the cask.

β: Weight percent of boron carbide in the neutron shield

β_{max}: The value of maximum deceleration selected to bound all values of α_{max} for a package drop event. Values for β_{max} in axial and lateral directions are selected

from the population of drop scenarios for a particular regulatory drop event (such as §71.73, free drop).

Γ: Total gasket spring back in the unloading cycle

Δ: Initial inter-part gap immediately before impact (Section 2.7)

δ: Lateral (global) deflection of the basket panel

δ_g: Maximum permissible gasket relaxation to maintain leak tightness

δ_{max}: Maximum value of δ

$\in$: Charpy lateral expansion at -28.9 °C (-20°F)

ξ: Weight percent of hydrogen in the neutron shield material

ρ: Density

φ: Coefficient of thermal expansion (average between ambient and the temperature of interest)

ψ: Thermal conductivity

θ Orientation of free drop (see Section 2.7.1)

HOLTEC INTERNATIONAL COPYRIGHTED MATERIAL

CHAPTER 1: GENERAL INFORMATION

1.0 GENERAL INFORMATION

This Safety Analysis Report (SAR)* for the HI-STAR 180 Package is a compilation of information and analyses in the format suggested in Reg. Guide 7.9 [1.0.1] to support a United States Nuclear Regulatory Commission (USNRC) licensing review for certification as a spent nuclear fuel transportation package pursuant to the provisions of 10CFR71 Subpart D [1.0.2] and 49CFR173 [1.0.3]. To ensure completeness of information and to facilitate locating key information in this SAR, a Reg. Guide 7.9 Compliance Matrix is provided in Appendix 1.A.

HI-STAR 180 is the model name of a transport cask engineered to serve as a type B(U)F-96 packaging for transporting radioactive material (including commercial spent fuel (CSF), reactor-related GTCC waste, and high level waste) under exclusive use shipment pursuant to 10CFR71.47. The present issue of this SAR considers only CSF as the package contents.

The HI-STAR 180 Cask containment system is engineered to parallel the anatomical design and construction of the containment system of HI-STAR 100 Package certified for transport under Docket No. 71-9261 [1.0.4] and for storage under Docket No. 72-1008 [1.0.5]. More specifically, the containment system materials of construction, welding joint details, NDE requirements, seal joint configurations, and Code of construction for the HI-STAR 180 Packaging, are identical to those of the HI-STAR 100 Packaging (certified by the USNRC and deployed at nuclear plants since the late 1990s).

[PROPRIETARY TEXT REMOVED]

Finally, the design embodiment, construction, and materials for the HI-STAR 180 Package impact limiters are identical to those used in the HI-STAR 100 Package (Docket No. 71-9261) [1.0.4] and are fully described in this SAR.

Figures 1.0.1 and 1.0.2 provide pictorials of the exterior of the HI-STAR 180 Cask and HI-STAR 180 Packaging, respectively. The drawing package in Section 1.3 details the important-to-safety features considered in the packaging evaluation and also includes certain details on non-important-to-safety features. For the reader's convenience and clarity, additional pictorials of the cask and packaging components are provided throughout this SAR.

* See Glossary for definition and abbreviation of terms used throughout this SAR.

HOLTEC INTERNATIONAL COPYRIGHTED MATERIAL

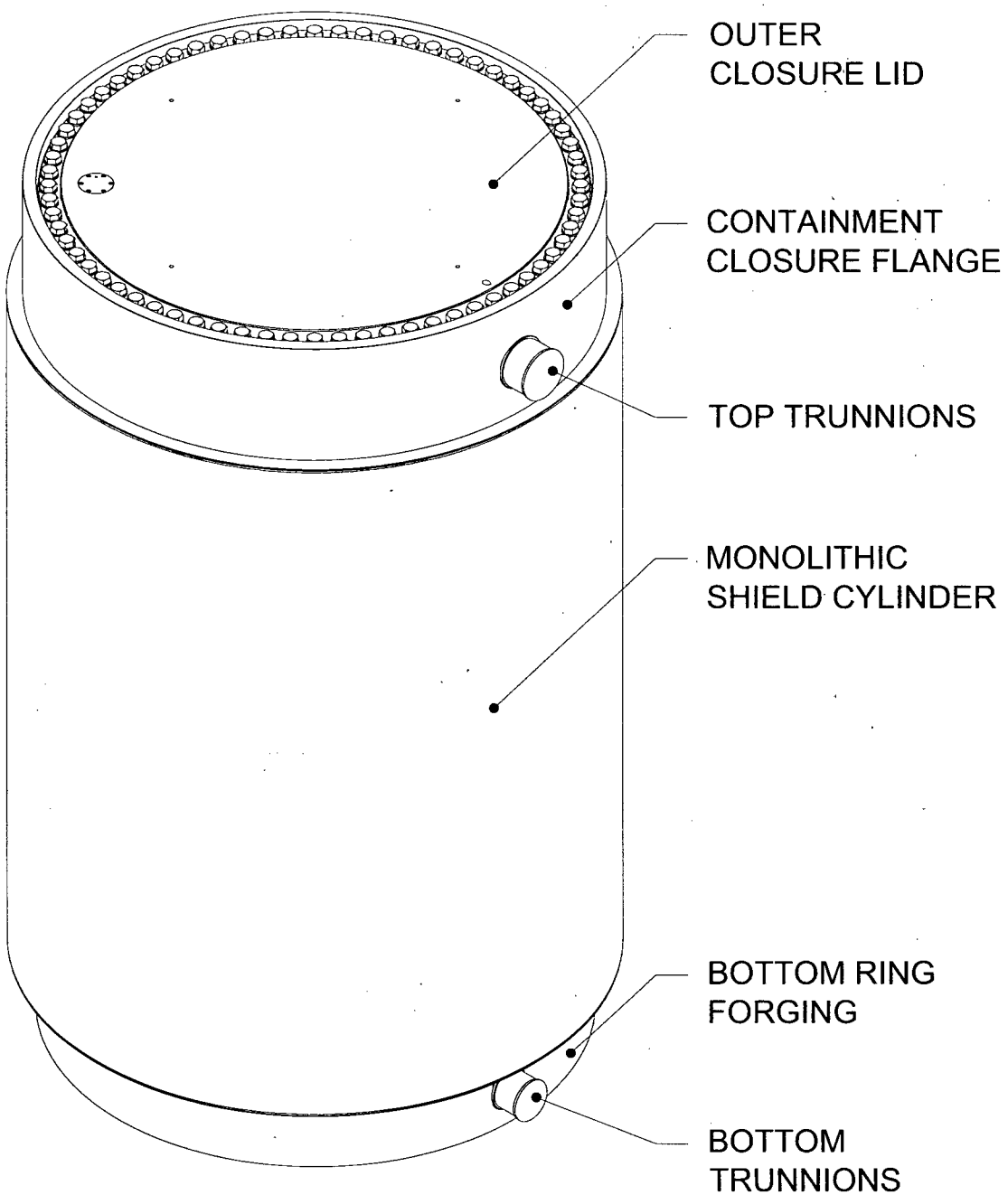

FIGURE 1.0.1 – EXTERIOR PICTORIAL VIEW OF THE HI-STAR 180 CASK

(Refer to Section 1.3 and the drawing package in Section 1.3 for details)

HOLTEC INTERNATIONAL COPYRIGHTED MATERIAL

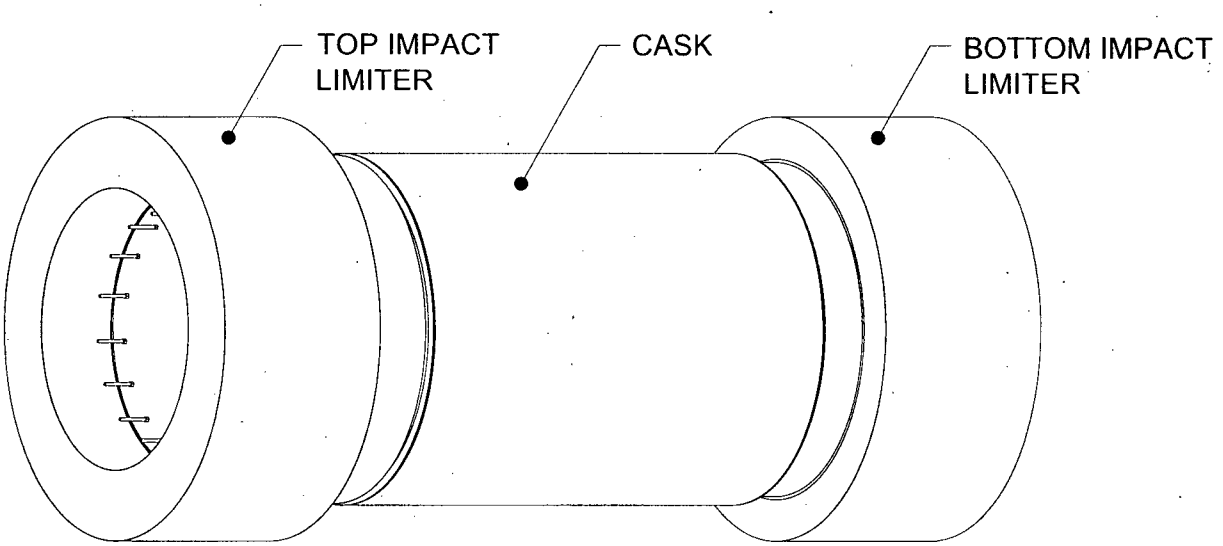

Note: Personnel Barrier Not Shown.

FIGURE 1.0.2 – EXTERIOR PICTORIAL VIEW OF HI-STAR 180 PACKAGING

(Refer to Section 1.3 and the drawing package in Section 1.3 for details)

1.1 INTRODUCTION

The HI-STAR 180 Package complies with all of the requirements of 10CFR71 for a Type B(U)F-96 package. In particular, the prescribed maximum normal operating pressure (MNOP) of 700 kPa (100 lb/in^2) for a type B(U) package is observed. No pressure relief device or feature intended to allow continuous venting during transport is provided on the HI-STAR 180 containment boundary (10CFR71.43(g) and 10CFR71.43(h)). Therefore, there is no pressure relief device or other feature that may permit release of radioactive material under the tests specified in 10CFR71.73. Analyses that demonstrate the compliance of the HI-STAR 180 Package with the requirements of Subparts E and F of 10CFR71 are provided in this SAR.

The criticality safety index (CSI) for the HI-STAR 180 Package is 0.0, as an unlimited number of packages will remain subcritical under the procedures specified in 10CFR71.59(a) (Subsection 6.1.3 provides the determination of the CSI). The transport index (TI) is in excess of 10 for the HI-STAR 180 Packaging with design basis fuel contents (Section 5.0 provides the determination of the TI). Therefore, the HI-STAR 180 Package must be transported by exclusive use shipment (10CFR71.47). If the HI-STAR 180 Package is not loaded with design basis radioactive material contents, then it may be shipped as non-exclusive, provided the threshold limits of 10CFR71.47 are not exceeded. An empty but previously loaded HI-STAR 180 Package may be shipped as an excepted package provided the descriptions and limits for surface contaminated objects (SCO) material set forth in 10CFR71.4 are satisfied.

The HI-STAR 180 Packaging design, material acquisition, fabrication, assembly, and testing shall be performed in accordance with Holtec International's quality assurance (QA) program. Holtec International's QA program was originally developed to meet NRC requirements delineated in 10CFR50, Appendix B, and was expanded in the early 90s to include provisions of 10CFR71, Subpart H, and 10CFR72, Subpart G, for structures, systems, and components (SSCs) designated as *important-to-safety*. NRC approval of Holtec International's QA program is documented by the Quality Assurance Program Approval for Radioactive Material Packages (NRC Form 311), Approval Number 0784, Docket No. 71-0784.

The HI-STAR 180 Packaging is designed to ensure safe transport of SNF. Some of the key features of the HI-STAR 180 Packaging that enhance its effectiveness are:

[PROPRIETARY TEXT REMOVED]

This SAR supports a licensed life of the HI-STAR 180 package of 5 years, after which a renewal by the USNRC is based upon an affirmative safety assessment to support such renewal. Even though the safety analyses is not required to address more than 5 years, all safety evaluations are based on a design or service life of at least 40 years to provide a suitable degree of conservatism. This is accomplished by using materials of construction that have been exhaustively tested and determined capable of withstanding HI-STAR 180's operating environments without degradation and with negligible reduction if any, in their capability to render their intended function (materials of construction and testing are discussed in Section 1.2 and Section 2.2 of this SAR). A maintenance program, as specified in Chapter 8, is implemented to ensure the HI-STAR 180

HOLTEC INTERNATIONAL COPYRIGHTED MATERIAL

Package will meet its Design Life of 40 years. The technical considerations that assure the HI-STAR 180 performs its design functions throughout its Design Life include all areas germane to the long-term integrity of the system, such as:

- Consideration of Exposure to Environmental Effects
- Consideration of Material Corrosion, Degradation and Aging Effects
- Provision of Preventive Maintenance and Inspections
- Consideration of Structural Fatigue, Brittle Fracture and Creep Effects
- Maintenance of Helium Atmosphere
- Assurance of Fuel Cladding Temperatures below NRC Prescribed Limits
- Assurance of Long-Term Effectiveness of the Neutron Absorber

In this SAR, SI units are the official units of measure (values in U.S. units, if provided, are for information only when accompanied by the equivalent SI unit value).

1.2 PACKAGE DESCRIPTION

1.2.1 Packaging

1.2.1.1 Major Packaging Components and Packaging Supports and Restraints

The HI-STAR 180 Packaging consists of the four major components (Cask, Fuel Basket/Basket Shims, Impact Limiters and Personnel Barrier) discussed in (a) through (d) below. Additionally, auxiliary equipment, in the form of packaging supports and restraints typically necessary for package transport, is described in subparagraph (e) below.

a. Cask

The HI-STAR 180 Cask is a metal cask designed to hold SNF in a subcritical configuration in a highly thermally conductive Metamic-HT fuel basket. The containment of the radiological contents is provided by a nickel steel (also referred to as "cryogenic steel") shell welded to a nickel steel baseplate at the bottom and a suitably machined nickel steel forging at the top, which is equipped with machined surfaces to fasten [PROPRIETARY TEXT REMOVED] cryogenic steel closure lid [PROPRIETARY TEXT REMOVED]. The fully cryogenic steel weldment and the cryogenic steel closure lid define the "Containment System Boundary" for the cask. The Containment System Boundary, including both closure lids, is designed and manufactured to ASME Section III Division 1, Subsection NB [1.2.1] as clarified in this SAR. Cask design details are shown in the drawing package in Section 1.3.

As with the previously licensed HI-STAR 100 Cask, all materials used in the HI-STAR 180 Cask containment system boundary are widely used in low temperature applications and regardless of their product form, are of compatible metallurgical genre and thus are readily weldable to each other. While the HI-STAR 180 Cask containment system boundary renders the function of a high integrity pressure vessel [PROPRIETARY TEXT REMOVED] , it does not possess the necessary shielding in the radial direction to attenuate the radiation dose sufficiently to meet the limits mandated in 10CFR71. Therefore, for shielding purposes, it is necessary to surround the containment shell with additional material optimized to reduce levels of gamma and neutron radiation.

[PROPRIETARY TEXT REMOVED]

Finally, like the HI-STAR 100 Cask, the HI-STAR 180 Cask features two removable top trunnions threaded into the top forging (containment closure flange) qualified as lifting points for the cask. In addition, the HI-STAR 180 Cask is equipped with two removable bottom trunnions threaded into the bottom forging. The bottom trunnions may be used as turning trunnion or may be used as lifting trunnions for horizontal lifting and handling in unison with the top trunnions.

b. Fuel Basket and Basket Shims

HOLTEC INTERNATIONAL COPYRIGHTED MATERIAL

[PROPRIETARY TEXT REMOVED]

c. Impact Limiters:

Two impact limiters (also referred to as AL-STAR 180) are installed at the two extremities of the HI-STAR 180 Cask and provide energy absorption capability for the normal and hypothetical accident conditions of transport. The impact limiters feature extremely rigid cylindrical barrels (backbone structures) that engage the top and bottom of the cask with a snug fit. Each impact limiter backbone is enveloped by crushable material, which in turn is enclosed by a stainless steel skin. The selection of the crushable material ensures that the performance of the impact limiters will be essentially insensitive to the ambient environment (temperature and humidity). The HI-STAR 180 impact limiters are of the same design genre as the AL-STAR 100 used in the HI-STAR 100 Package (Docket No. 71-9261). The following key design features typify the HI-STAR 180 impact limiters:

[PROPRIETARY TEXT REMOVED]

Impact limiter details are shown in the drawing package in Section 1.3. The *critical characteristics* and the attainment of the required critical characteristics through a comprehensive qualification process and production testing are discussed in Chapters 2 and 8, respectively.

The installation of impact limiters requires the replacement of top and bottom trunnions with steel shielding plugs flush with the cask for proper fit-up.

d. Personnel Barrier:

During transport the cask lies in a horizontal orientation with the two impact limiters on its two extremities. The personnel barrier is placed over the cask to provide a physical barrier to prevent manual access to hot (85°C (185°F) or higher) areas of the cask when configured for transportation as required by 10CFR71.43(g).

The personnel barrier is not required for the HI-STAR 180 Package to meet the external radiation standards of 10CFR71.47. For the purpose of dose calculations/measurements that ensure compliance with regulatory limits, the jurisdictional boundary of the HI-STAR 180 Packaging is the external surfaces of the impact limiters and the cask. If a personnel barrier is used, the jurisdictional boundary is then the external surfaces of the impact limiters and the personnel barrier; and the bottom surface of the railcar/transport vehicle deck. The personnel barrier for HI-STAR 180 will protect the cask body only (not the impact limiters).

The personnel barrier is not a structural part of the HI-STAR 180 Packaging but is designated as a packaging component when in use.

[PROPRIETARY TEXT REMOVED]

e. Packaging Supports and Restraints:

The HI-STAR 180 transport cask is engineered for shipment by both railroads and roadways using appropriate supports and restraints. Packaging supports and restraints considered as auxiliary equipment, such as longitudinal stops, support saddles, transport cradle, wedge shims and a tie down system are normally necessary as part of the transport on a rail car conveyance. A similar configuration of the auxiliary equipment may be implemented for package transport by road. The HI-STAR 180 transport cask when configured for package transport by rail or road may also be transported by sea going vessel in accordance with applicable 49CFR requirements as indicated by 10CFR71.5. Non-integral appurtenances to the cask, such as the transport cradle, longitudinal stops, support saddles, tie down system and wedge shims are not structural parts of the HI-STAR 180 Package and, as such, are not designated as packaging components.

The HI-STAR 180 Package lends itself to a horizontal packaging assembly for transport as shown in the drawing packaging in Section 1.3. As in the HI-STAR 100 Packaging, two support saddles located at either end of the cask body provide the support surface for the HI-STAR 180 Packaging. Circumferential tie down straps are used to secure the packaging and tapered wedge shims that close the gap between the impact limiters and the axial restraints (longitudinal stops) of the transport vehicle are used to restrain the package against axial movement.

Packaging supports and restraints shall be designed as appropriate for either rail, road (i.e. public highway) or vessel (i.e. sea) transport applications in compliance with the applicable requirements of 10CFR Part 71 and the applicable 49CFR requirements as indicated by 10CFR71.5, with additional consideration to the applicable industry (railroad, road and sea transportation) standards. More specifically, 10CFR71.45(a) and (b) requirements must be complied with.

In the HI-STAR 180 transport package configuration, the cask trunnions are not qualified to be used to lift the HI-STAR 180 Package (i.e., loaded cask with impact limiters) and in fact are replaced by steel trunnion (shielding) plugs which are then covered by the impact limiters. Therefore, in the package transport configuration, there are no lifting attachments remaining that are a structural package and there is no structural part of the package that must be rendered inoperable for lifting the package per 10CFR71.45(a).

1.2.1.2 Overall Packaging Dimensions and Weight

The overall dimensions of the HI-STAR 180 Package are summarized below:

Overall Dimensions of HI-STAR 180[1][PROPRIETARY TEXT REMOVED]	

The weights of the HI-STAR 180 Package and Packaging are summarized below:

General Weights of HI-STAR 180[2][PROPRIETARY TEXT REMOVED]	

The maximum gross transport weight of the HI-STAR 180 Package, (without the personnel barrier) is marked on the packaging nameplate.

The actual as-built (empty) packaging weight will vary slightly due to dimensional tolerances and small variations in material density. A verification of the as-manufactured empty packaging weight is not required because the safety analysis contained in this SAR considers such variations to ensure that the analyses are bounding.

The nominal weights for the HI-STAR 180 Package main components, nominal weight of the cask and package at maximum capacity with design basis SNF are provided in Section 2.1 (and Table 2.1.11). The weight of the package contents is discussed in Subsection 1.2.2 below.

1.2.1.3 Containment Features

The Containment System forms an internal cylindrical cavity for housing the fuel basket. The Containment Boundary is formed by a cryogenic steel inner shell (containment shell) welded at the bottom to a thick bottom plate (containment baseplate) and welded at the top to a heavy top flange (containment closure flange). [PROPRIETARY TEXT REMOVED] closure lid are

[1] All dimensions are nominal values. Design basis safety analyses may use upper or lower bound values, as appropriate, to ensure conservatism.
[2] Design basis safety analyses may use upper or lower bound weight values, as appropriate, to ensure conservatism.

recessed into the containment closure flange and configured to protect the closure bolts and seals in the event of a drop accident. [PROPRIETARY TEXT REMOVED] closure lid [PROPRIETARY TEXT REMOVED] concentric seals and inter-seal test ports are closed by threaded port plugs. The [PROPRIETARY TEXT REMOVED] closure lid has vent and drain ports that are closed by a threaded port plug/cap (a redundant closure feature) and by bolted port cover plates (a containment closure feature). [PROPRIETARY TEXT REMOVED] A schematic of containment system components is shown in the drawing package in Section 1.3 and also in Figures 4.1.1, 4.1.2, and 4.1.3 (all components with the primary function of containment are shown in these schematics). As shown in these schematics, the massive inner closure lid system defines the containment boundary. [PROPRIETARY TEXT REMOVED]

1.2.1.4 Moderator Exclusion Features

The HI-STAR 180 packaging is designed to transport both moderate burnup (MBF) and high burnup fuel (HBF). To address concerns with the structural integrity of HBF under accident conditions, and its potential impact on criticality safety, the design of HI-STAR 180 provides utmost assurance of water exclusion under a postulated 10CFR 71.73 accident scenario. Details of the design measures and technical confirmation to meet the intent and performance objectives of ISG-19 are described in Appendix 1.B, where additional defense-in-depth measures to insure sub-criticality compliance are also discussed.

1.2.1.5 Neutron and Gamma Shielding Features

The HI-STAR 180 Package is equipped with appropriate shielding to minimize personnel exposure. The HI-STAR 180 Packaging (with or without the personnel barrier) ensures the external radiation standards of 10CFR71.47 under exclusive shipment are met when loaded with design basis fuel. The drawing package in Section 1.3 provides information on the configuration of neutron and gamma shielding features.

The initial attenuation of gamma and neutron radiation emitted by the radioactive spent fuel is provided by the fuel basket and the fuel basket shims. However, most of the shielding in the transport package is contained in the body of the cask and consists of neutron shielding by steel and Holtite-B and gamma shielding (by steel in radial direction, and by steel and lead in axial directions). [PROPRIETARY TEXT REMOVED] The arrangement of the shielding materials shown in the licensing drawings reflects the design optimization carried out for the HI-STAR 180 cask.

[PROPRIETARY TEXT REMOVED]

1.2.1.5.1 Holtite™ Neutron Shielding Material

(a) Qualification of the Holtite™ Neutron Shielding Material

The shielding against neutron radiation in HI-STAR 180 Packaging is provided by Holtite-B. Holtite™ is a hydrogen rich, radiation resistant, polymeric material impregnated with boron

carbide, which was initially developed as Holtite-A by Holtec International in the early 90s as a part of the company's HI-STAR 100 design development program. In HI-STAR 180, an improved version of Holtite-A, labeled Holtite-B, is utilized.

Holtite-A utilizes Aluminum Trihydrate (ATH) as the principal source of hydrogen dispersed in an epoxy compound [1.2.4, 1.2.5]. A mixing machine, devised by Holtec, is used in the cask manufacturing facility to pour the Holtite slurry into the cask's cavities. The shielding material cures to solid form *in-situ*, ensuring that no gaps or voids will exist. Holtite-A was subjected to extensive studies of its critical characteristics (viz., radiation resistance, physical stability at service temperature and homogeneity) during its evaluation and validation program [1.2.4, 1.2.5], which led to its regulatory approval in the HI-STAR 100 Docket (71-9261) and subsequent use in the manufactured HI-STAR 100 overpacks.

Holtite-B characteristics are similar to Holtite-A except that Holtite-B has a greater thermal resistance. [PROPRIETARY TEXT REMOVED] Holtite-B has been subjected to the same battery of tests to establish its radiation resistance, physical stability at service temperature and homogeneity as Holtite-A [1.2.17].

In this SAR, the terms Holtite-B and Holtite are used interchangeably.

(b) Critical Characteristics of the Holtite Neutron Shielding Material

(i) Critical Characteristics for Shielding Function

Holtite Density

[PROPRIETARY TEXT REMOVED]
Hydrogen Density

[PROPRIETARY TEXT REMOVED]
Boron Carbide

The Holtite for the HI-STAR 180 Package must contain a nominal minimum 2% weight concentration B_4C in finely dispersed powder form.

(ii) Critical Characteristics for Thermal Function

Thermal Resistance and Stability

[PROPRIETARY TEXT REMOVED]

Thermal Conductivity

The Holtite minimum thermal conductivity must be 0.4 W/m-K (0.23 Btu/ft-hr-°F) at the corresponding neutron shield component design temperature of 204 °C (400 °F).

1.2.1.6 Criticality Control Features

Criticality control in the HI-STAR 180 Packaging is provided by the coplanar grid work of the Fuel Basket honeycomb, made entirely of the Metamic™-HT extruded borated metal matrix composite plates. Metamic-HT is the neutron absorber in the HI-STAR 180 Packaging. Thus the neutron absorber is not attached to the cell walls by a mechanical means that may be vulnerable to detachment. Hence, the locational fixity of the neutron absorber is guaranteed.

There are no moderators in the HI-STAR 180 Packaging. The fuel basket flux trap design features described in subsection 1.2.1.1 above and illustrated in the licensing drawings are the criticality control features in the HI-STAR 180 fuel basket.

[PROPRIETARY TEXT REMOVED]

1.2.1.6.1 Qualification of Metamic-HT

Metamic-HT is a composite of nano-particles of aluminum oxide (alumina) and finely ground boron carbide particles dispersed in the metal matrix of pure aluminum. Metamic-HT is the constituent material of the HI-STAR 180 fuel baskets. Metamic-HT neutron absorber is a successor to the Metamic (classic) product widely used in dry storage fuel baskets [1.2.7] and spent fuel storage racks [1.2.8, 1.2.9]. Metamic-HT is engineered to possess the necessary mechanical characteristics for structural application in spent nuclear fuel casks.

[PROPRIETARY TEXT REMOVED]

1.2.1.7 Lifting and Tie-Down Devices

Lifting trunnions are attached to the cask containment closure flange for lifting and also for rotating the cask body between vertical and horizontal positions. The lifting trunnions are located 180° apart in the sides of the top flange. Two additional trunnions are attached near the bottom extremity of the cask and located 180° apart to provide a built-in pivoting axis for cask rotation. The bottom trunnions are slightly off-center to ensure proper rotation direction of the cask. The bottom trunnions may also be used as lifting trunnions to lift, rotate and handle the cask from vertical to horizontal but must be used in conjunction with top lifting trunnions and qualified as specified in Section 8.1.

Lifting trunnions are designed in accordance with 10CFR71.45 and ANSI N14.6 [1.2.12], manufactured from a high strength alloy, and installed in threaded openings.

The lifting, upending, and downending of the HI-STAR 180 Package requires the use of external handling devices. A lift yoke is typically utilized when the cask is to be lifted and handled vertically and to perform upending and downending. Upending and downending are typically performed with the cask pivoting on an ancillary tilting device specifically designed for this purpose. Two lift yokes or similar structural/mechanical lifting devices are typically used to lift the cask in the horizontal orientation.

Figure 1.3.2 provides an illustration of a typical package rail transport configuration. The support saddles provide attachment points for belly slings/straps around the cask body to prevent excessive vertical or lateral movement of the cask during normal transportation. The impact limiters affixed to both ends of the cask are designed to transmit the design basis axial transport loads into the longitudinal stops.

1.2.1.8 Heat Transfer Features

The HI-STAR 180 Package can safely transport SNF by maintaining the fuel cladding temperature below the limits for normal and accident conditions consistent with the guidance in the NRC Interim Staff Guidance, ISG-11 Rev. 3 [1.2.13]. The temperature of the fuel cladding is dependent on the decay heat and the heat dissipation capabilities of the cask. The SNF decay heat is passively dissipated without any mechanical or forced cooling. The primary heat transfer mechanisms in the HI-STAR 180 Package are conduction and thermal radiation.

The free volume of the space under the inner closure lid (storage cavity) and the cask inter-lid space are filled with high purity helium gas (see Chapter 7 of this SAR) during fuel loading operations. Besides providing an inert dry atmosphere for the fuel cladding, the helium gas also provides conductive heat transfer between each assembly and the surrounding basket walls and across any gaps between the metal surfaces inside the containment system. Metal conduction transfers the heat throughout the fuel basket, through the containment system boundary, and finally through [PROPRIETARY TEXT REMOVED] exterior cask components. The cask storage cavity and inter-lid spaces are backfilled with helium to pressures specified in Tables 1.2.1 and 1.2.2.

The distinguishing features of the HI-STAR 180 cask that enables it to dissipate heat efficiently are:

[PROPRIETARY TEXT REMOVED]

1.2.1.9 Internal Support Features

The HI-STAR 180 Package is equipped with basket shims engineered to provide conformal support for the fuel basket and facilitate heat transfer. [PROPRIETARY TEXT REMOVED]

1.2.1.10 Anti-Rotation Devices

The HI-STAR 180 Package is equipped with internal anti-rotation devices to prevent the rotation of the fuel basket and basket shims within the cask. [PROPRIETARY TEXT REMOVED]

1.2.1.11 Packaging Markings

Each HI-STAR 180 Packaging shall have a unique identification plate with appropriate markings per 10CFR71.85(c). The identification plate shall not be installed until each HI-STAR 180 Packaging component has completed the fabrication acceptance test program and been accepted by authorized Holtec International personnel.

1.2.2 Contents of Package

The HI-STAR 180 Package is classified as a Category I Type B package since the maximum activity of the contents to be transported in the HI-STAR 180 Package is above limits shown in Table 1 of Regulatory Guide 7.11 [1.2.3].

The HI-STAR 180 package is specifically designed for transportation of fuel from a nuclear power plant over the plant's entire life cycle, including transport of all fuel assemblies after the plant shutdown. The range of cask content does therefore need to encompass a wide range of fuel parameters, including the following:

- Lower burnup fuel with long cooling times from earlier cycles of the plant; and
- High burnup fuel with intermediate cooling times from current plant operations; and
- High and low burnup fuel with short cooling times to be transported after plant shutdown; and
- UO_2 fuel with a large initial enrichment range; and
- MOX fuel from recycling, with a wide range of isotopic compositions.

[PROPRIETARY TEXT REMOVED]

Table 1.2.3 lists the acceptable physical characteristics of the fuel assemblies qualified for transportation in the HI-STAR 180 package. UO_2 assemblies are limited to an initial enrichment of less than or equal to 5 wt% ^{235}U. For MOX assemblies, four sets of limits are specified in Table 1.2.4, and three sets are specified in Table 1.2.5. A MOX assembly meeting the limits in one of the sets in each table is acceptable for transport. [PROPRIETARY TEXT REMOVED]

The maximum mass of radioactive material permitted for transport in the HI-STAR 180 Package is shown in Table 1.2.3. The maximum was calculated assuming the use of the F-37 basket completely filled with fuel assemblies at the maximum allowable fuel mass. For the F-32 basket the maximum will be lower.

The maximum mass of fissile material permitted for transport in the HI-STAR 180 Package is also shown in Table 1.2.3. [PROPRIETARY TEXT REMOVED]

The radioactive and fissile material is in the form of solid fuel pellets with a maximum fuel density shown in Table 1.2.3. There are no moderating material or neutron absorbers in the contents, nor any other material that would create a chemical, galvanic or other reaction leading to the release of combustible gases.

The fuel assemblies are loaded into the basket cells. Each basket cell holds one fuel assembly. The fuel assemblies and the basket cells are approximately the same height. There is no secondary packaging in the contents that is not considered part of the packaging discussed in Section 1.2.1.

The maximum weight of the radioactive materials and the payload are shown in Table 1.2.3.

Figures 1.2.3 and 1.2.4 provide cross sectional views of the F-32 and F-37 baskets storage cell layouts. The storage cells are numbered and basket quadrants are specified as shown in these figures to facilitate fuel loading under regionalized storage. With regionalized loading there are eight regions defined for each basket. The storage cell numbers for each region and the storage cell numbers for each quadrant are listed in Tables 1.2.6a and 1.2.6b, and also noted in Figures 1.2.3 and 1.2.4. Table 1.2.7 specifies loading curves (minimum burnup as a function of initial enrichment) for UO_2 fuel in certain regions in the F-37 basket for nine different configurations. [PROPRIETARY TEXT REMOVED] Corresponding core operating requirements are listed in Table 1.2.14. Tables 1.2.8 and 1.2.9 list the specific minimum enrichment, maximum decay heat, maximum burnup and minimum cooling time limits for six loading patterns for the F-32 and for four loading patterns for the F-37 fuel basket.

In addition to the heat load limit for assemblies in each region, there is a heat load limit for each basket quadrant and an overall heat load limit specified in Table 1.2.3 for both the F-32 and F-37. Table 1.2.10 lists alternative maximum burnup/minimum enrichment/minimum cooling time combinations for most regions. These are referenced appropriately in Tables 1.2.8 and 1.2.9.

[PROPRIETARY TEXT REMOVED]
Representative axial burnup distributions for UO_2 and MOX assemblies are listed in Table 1.2.11.

[PROPRIETARY TEXT REMOVED]

1.2.2.1 Core Operating Parameters†

For assemblies that need to meet the burnup requirements listed in Table 1.2.7, certain operating limits during in-core depletion must be satisfied. These limits are listed in Table 1.2.14. For each assembly, the parameters Soluble Boron Concentration (SBC), Specific Power (SP), and Moderator Temperature (MT) must be calculated using the following equations. In these

† This subsection is included by reference into Appendix A of the CoC.

equations, and the symbols used therein, the subscript i denotes the cycle. The summation ($\sum$) in these equation is to be performed over all cycles i that the assembly was in the core.

Given

B_i Assembly-average burnup for cycle i
BC_i Core-average burnup for cycle i
SB_i Average In-Core Soluble Boron Concentration for cycle i
T_i Length of Cycle
CITi Core Inlet Temperature
COT_i Core Outlet temperature

the values to be compared to the limits in Table 1.2.14 are to be calculated as follows:

Soluble Boron:

$SB = \sum (SB_i * B_i) / \sum B_i$

Assembly Average Specific Power:

$SP = \sum B_i / \sum T_i$

Assembly Average Moderator Temperature:

$CFC_i = B_i/BC_i$ Correction Factor; if $CFC_i<1$ then set $CFC_i = 1$

$MT = \sum (B_i*(CIT_i + CFC_i * (COT_i-CIT_i))) / \sum B_i$

1.2.3 Special Requirements for Plutonium

The contents of package provided in Section 1.2.2 and to be transported in the HI-STAR 180 Package contain plutonium in solid form and in varying quantities.

1.2.4 Operational Features

The HI-STAR 180 Packaging has been developed to facilitate loading and unloading of fuel with ALARA protection against handling accidents and a minimum number of handling evolutions (i.e., simplicity of handling). There are no complex operational features that required a detailed exposition. Similar to the MPC closure lids loaded in HI-STAR 100 and HI-STORM 100 overpacks, the HI-STAR 180 cask closure lid [PROPRIETARY TEXT REMOVED] equipped with penetrations (ports) for drying and inerting the cask's content. The port configuration on the [PROPRIETARY TEXT REMOVED] closure lid is configured to minimize radiation streaming as indicated in the drawing package in Section 1.3. The [PROPRIETARY TEXT REMOVED] closure lid ports shown in the drawing package in Section 1.3 are typical ports equipped with

port caps. Port plugs, in lieu of caps, are equally effective and may be used. The configuration of the [PROPRIETARY TEXT REMOVED] closure lid access port cover and port cover subcomponents likewise have redundant closure. The HI-STAR 180 Packaging is a completely passive system once loaded and sealed in accordance with Chapter 7. The abbreviated narrative below on typical loading operations helps illustrate the overall simplicity of the loading process. Chapter 7 provides the essential elements of cask operations.

Typical Loading Operations

At the start of loading operations, the cask is configured with the closure lids removed and the fuel basket installed. The cask is lowered into the spent fuel pool for fuel loading. Pre-selected assemblies are loaded into the fuel basket cells and a visual verification of the assembly identification is performed.

While still underwater, the inner closure lid is installed. The cask is removed from the pool and placed in the designated preparation area.

The Forced Helium Dehydration (FHD) System is connected to the cask and used to remove all bulk water and water vapor so as to reduce the level of moisture in the cask cavity to acceptable levels. This is accomplished by recirculating dry, heated helium through the cask cavity to absorb the moisture. The HI-STORM FSAR [1.2.7] provides the Design Criteria for the FHD system.

Alternatively, cavity drying may be carried out using the classical vacuum drying system, if it is ensured that the fuel temperature remains within acceptable limits per the requirements in Chapter 3 and procedures in Chapter 7 of this SAR.

Following the fuel drying operations, the cask cavity is backfilled with helium gas and the vent/drain ports are sealed (quantity of helium is specified in Table 1.2.1). The [PROPRIETARY TEXT REMOVED] Containment Boundary seals are then leak tested to ANSI N14.5 acceptance criteria for "leaktight" joints.

The [PROPRIETARY TEXT REMOVED] closure lid is installed, followed by evacuation of the inter-lid space using the [PROPRIETARY TEXT REMOVED] lid's port openings and backfilling with helium (quantity of helium is specified in Table 1.2.2). The [PROPRIETARY TEXT REMOVED] lid seals are then also leak tested to ANSI N14.5 acceptance criteria for "leaktight" joints.

The cask is next secured on the transport vehicle with impact limiters attached, a security seal (tamper device) is attached, and the personnel barrier is installed (if required). The HI-STAR 180 Package is then ready for transport.

The inspections and tests (acceptance criteria and maintenance requirements) required to prepare the package for shipment are specified in Section 8 in this SAR.

HOLTEC INTERNATIONAL COPYRIGHTED MATERIAL

Table 1.2.1
[PROPRIETARY TEXT REMOVED]

Table 1.2.2
[PROPRIETARY TEXT REMOVED]

HOLTEC INTERNATIONAL COPYRIGHTED MATERIAL

Table 1.2.3

[PROPRIETARY TEXT REMOVED]

Table 1.2.4
Isotopic Characteristics of MOX Fuel

	Isotopic Composition (g/assembly)			
Criteria / Isotope	1	2	3	4
Pu238	≤ 700	≤ 202	≤ 202	≤ 202
Pu239	≥ 13000	≥ 11000	≥ 7524	≥ 8000
Pu240	≥ 5800	≥ 3800	≥ 1700	≥ 1700
Pu241	≤ 2300	≤ 1600	≤ 1250	≤ 1600
Pu242	≤ 1900	≤ 751	≤ 700	≤ 751
U235	≥ 730	≥ 720	≥ 2100	≥ 720
U238	≤ 297000	≤ 320200	≤ 326000	≤ 326000

Table 1.2.5
Isotopic Characteristics of MOX Fuel

Criteria / Composition	1	2	3
Pu-239 (g/kg-HM)	≤ 39.5	≤ 49	≤ 26
Pu-238/Pu-239 (g/g)	≥ 0.0	≥ 0.015	≥ 0.0
Pu-240/Pu-239 (g/g)	≥ 0.27	≥ 0.38	≥ 0.21
Pu-241/Pu-239 (g/g)	≤ 0.15	≤ 0.20	≤ 0.16
Pu-242/Pu-239 (g/g)	≥ 0.012	≥ 0.06	≥ 0.012
Am-241(g/kg-HM)	≥ 0.0	≥ 0.0	≥ 0.0
U-235 (g/kg-HM)	≤ 7.1	≤ 7.1	≤ 7.1

HOLTEC INTERNATIONAL COPYRIGHTED MATERIAL

Table 1.2.6a

Regions for Regionalized Loading

Region Number	Cell Numbers	
	F-32 (see Figure 1.2.3)	**F-37 (see Figure 1.2.4)**
1	3,11,22,30	2,16,22,36
2	8,12,21,25	6,17,21,32
3	13,14,19,20	12,18,20,26
4	4,5,28,29	19
5	6,9,24,27	1,3,9,15,23,29,35,37
6	7,15,18,26	5,7,10,14,24,28,31,33
7	1,10,23,32	11,13,25,27
8	2,16,17,31	4,8,30,34

Table 1.2.6b

Quadrants for Regionalized Loading

Quadrant Number	Cell Numbers	
	F-32 (see note 1)	F-37 (See note 2)
1	3, 4, 8, 9, 10, 14, 15, 16	2, 3, 6, 7, 8, 12, 13, 14, 15, 19, 20, 21, 22
2	20, 21, 22, 26, 27, 28, 31, 32,	19, 20, 21, 22, 26, 27, 28, 29, 32, 33, 34, 36, 37
3	17, 18, 19, 23, 24, 25, 29, 30	16, 17, 18, 19, 23, 24, 25, 26, 30, 31, 32, 35, 36
4	1, 2, 5, 6, 7, 11, 12, 13	1, 2, 4, 5, 6, 9, 10, 11, 12, 16, 17, 18, 19

Notes:

1. F-32 Quadrants are defined in Figure 1.2.3. The total additive heat load in each quadrant shall not exceed the quadrant heat load limit specified in Table 1.2.3.
2. F-37 Quadrants are defined in Figure 1.2.4. The total additive heat load in each quadrant shall not exceed the quadrant heat load limit specified in Table 1.2.3. Because the F-37 quadrants share storage cell locations, the following equations are specified to ensure total heat load per quadrant is not exceeded.

- **Quadrant No. 1: Actual quadrant heat load = (1/2)2 + 3 + (1/2)6 + 7 + 8 + (1/2)12 + 13 + 14 + 15 + (1/4)19 + (1/2)20 + (1/2)21 + (1/2)22**
- **Quadrant No. 2: Actual quadrant heat load = (1/4)19 + (1/2)20 + (1/2)21 + (1/2)22 + (1/2)26 + 27 + 28 + 29 + (1/2)32 + 33+ 34 + (1/2)36 + 37**
- **Quadrant No. 3: Actual quadrant heat load = (1/2)16 +(1/2)17 + (1/2)18 + (1/4)19 + 23 + 24 + 25 + (1/2)26 + 30 + 31 +(1/2)32 + 35 + (1/2)36**
- **Quadrant No. 4: Actual quadrant heat load = 1 + (1/2)2 + 4 + 5 + (1/2)6 + 9 + 10 + 11 + (1/2)12 + (1/2)16 + (1/2)17 + (1/2)18 + (1/4)19**

Where values in fractions denote the quadrant's share of specific storage cell heat loads.

HOLTEC INTERNATIONAL COPYRIGHTED MATERIAL

Table 1.2.7

Loading Curves for UO_2 fuel in specific Regions of the F-37 Basket

Configuration	Regions (Figure 1.2.4)	Maximum Initial Enrichment for Fresh UO_2 Fuel Assemblies (wt% ^{235}U)	Minimum Assembly Burnup for UO_2 Assemblies with an Initial Enrichment of 5.0 wt% ^{235}U. (GWd/mtU)
1	1,2,3,4,6,7,8	**2.80**	22
2	1,3,6,7,8	**2.73**	25
3	2,3,6,7,8	**2.73**	25
4	2,4,6,7,8	**2.55**	27
5	2,4,5,6,7	**2.55**	27
6	2,3,4,6,7	**2.42**	31
7	2,4,6,7	**2.38**	34
8	**1,2,3,4,5,7,8**	**2.31**	35
9	**1,3,4,6,7**	**2.38**	34

Notes :

1. All regions not listed above for a given Configuration can be loaded with fresh MOX fuel meeting the requirements in Tables 1.2.5, or with fresh UO_2 fuel with an enrichment of up to 5 wt% ^{235}U.

2. Minimum Burnup Requirements at intermediate enrichments can be determined by linear interpolation.

Table 1.2.8: Loading Patterns for the F-32 Basket

Loading Pattern A for the F-32 Basket					
Region	Maximum Heat Load per Assembly[2] (kW)	Maximum Burnup (GWd/mtU)	Minimum Enrichment (wt%) or MOX	Minimum Cooling Time (years)	Alternative Fuel Specification (Table 1.2.10)
1	2.1	61.5	MOX	11	A-6, C-1
2	1.2	51	4.5	3	A-1
3	1.0	60	4.5	9	A-1
4	1.2	66	4.5	14	A-2
5	1.5	54	4.5	4	A-3
6	1.5	66	4.5	3	A-6
7	1.2	66	4.5	11	A-4
8	1.2	15	4.5	3	A-5
Loading Pattern B for the F-32 Basket					
1	2.1	66	4.5	3	A-6
2	1.2	51	4.5	3	A-1
3	1.0	60	4.5	9	A-1
4	1.2	66	4.5	14	A-2
5	1.5	48	MOX	17	A-6
6	1.5	66	4.5	3	A-6
7	1.2	66	4.5	11	A-4
8	1.2	15	4.5	3	A-5

[2] **Maximum overall cask heat load and maximum heat load per basket quadrant specified in Table 1.2.3 must not be exceeded. Refer to Figure 1.2.3.**

Table 1.2.8: Loading Patterns for the F-32 Basket (continued)

Loading Pattern C for the F-32 Basket					
Region	Maximum Heat Load per Assembly[2] (kW)	Maximum Burnup (GWd/mtU)	Minimum Enrichment (wt%) or MOX	Minimum Cooling Time (years)	Alternative Fuel Specification (Table 1.2.10)
1	1.8	63	4.5	3.5	A-7
2	1.2	51	4.5	3	A-1
3	1.0	60	4.5	9	A-1
4	1.2	66	4.5	14	A-2
5	1.7	60	MOX	15	A-6
6	1.6	66	4.5	3	A-6
7	1.2	66	4.5	11	A-4
8	1.2	15	4.5	3	A-5
Loading Pattern D for the F-32 Basket					
1	1.8	63	4.5	4	A-8
2	1.2	48	MOX	17	A-6
3	1.0	60	4.5	9	A-1
4	1.2	66	4.5	14	A-2
5	1.7	48	MOX	17	A-7
6	1.6	66	4.5	4	A-9
7	1.2	66	4.5	11	A-4
8	1.2	39	MOX	17	A-5

[2] **Maximum overall cask heat load and maximum heat load per basket quadrant specified in Table 1.2.3 must not be exceeded. Refer to Figure 1.2.3.**

Table 1.2.8: Loading Patterns for the F-32 Basket (continued)

Loading Pattern E for the F-32 Basket					
Region	Maximum Heat Load per Assembly[2] (kW)	Maximum Burnup (GWd/mtU)	Minimum Enrichment (wt%) or MOX	Minimum Cooling Time (years)	Alternative Fuel Specification (Table 1.2.10)
1 through 8	1	66	4.5	7	n/a
Loading Pattern F for the F-32 Basket					
1	1.8	63	4.5	3.5	A-7
2	1.2	63	4.5	4	A-10
3	1.0	60	4.5	9	A-1
4	1.2	66	4.5	14	A-2
5	1.7	63	4.5	5	A-3
6	1.6	66	4.5	4	A-9
7	1.2	66	4.5	11	A-4
8	1.2	51	MOX	17	A-8

[2] **Maximum overall cask heat load and maximum heat load per basket quadrant specified in Table 1.2.3 must not be exceeded. Refer to Figure 1.2.3.**

Table 1.2.9: Loading Patterns for the F-37 Basket

Loading Pattern A for the F-37 Basket					
Region	Maximum Heat Load per Assembly[2] (kW)	Maximum Burnup (GWd/mtU)	Minimum Enrichment (wt%) or MOX	Minimum Cooling Time (years)	Alternative Fuel Specification (Table 1.2.10)
1	2.1	61.5	MOX	11	B-9, C-1
2	1.2	51	4.5	4	B-1
3	0.8	60	4.5	9	B-2
4	0.5	66	4.5	14	B-3
5	1.2	66	4.5	14	B-4
6	1.5	66	4.5	4	B-10
7	1.0	66	4.5	11	B-5
8	1.2	15	4.5	4	B-6
Loading Pattern B for the F-37 Basket					
1	2.1	66	4.5	4	B-10
2	1.2	51	4.5	4	B-1
3	0.8	60	4.5	9	B-2
4	0.5	66	4.5	14	B-3
5	1.2	66	4.5	14	B-4
6	1.5	48	MOX	17	B-9
7	1.0	66	4.5	11	B-5
8	1.2	15	4.5	4	B-7

[2] **Maximum overall cask heat load and maximum heat load per basket quadrant specified in Table 1.2.3 must not be exceeded. Refer to Figure 1.2.4.**

Table 1.2.9: Loading Patterns for the F-37 Basket (continued)

Loading Pattern C for the F-37 Basket					
Region	Maximum Heat Load per Assembly[2] (kW)	Maximum Burnup (GWd/mtU)	Minimum Enrichment (wt%) or MOX	Minimum Cooling Time (years)	Alternative Fuel Specification (Table 1.2.10)
1	1.7	63	4.5	14	B-8
2	1.2	48	MOX	17	B-9
3	0.8	60	4.5	9	B-2
4	0.5	66	4.5	14	B-3
5	1.2	45	MOX	17	B-4
6	1.7	63	4.5	5	B-11
7	1.0	63	4.5	11	B-2
8	1.2	15	4.5	4	B-6
Loading Pattern D for the F-37 Basket					
1 through 8	0.865	66	4.5	8	n/a

[2] **Maximum overall cask heat load and maximum heat load per basket quadrant specified in Table 1.2.3 must not be exceeded. Refer to Figure 1.2.4.**

Table 1.2.10: Alternative Fuel Specifications*

Maximum Burnup (GWd/mtU)	Minimum Enrichment (wt% ^{235}U)	A-1	A-2	A-3	A-4	A-5	A-6	A-7	A-8	A-9	A-10
		Minimum Cooling Time (Years)									
66	4.5	18	14	7	11	14	3	4	4.5	4	6
66	3.95	24	20	8	14	18	5	4.5	5	7	10
63	4.5	14	--	6	10	11	--	3.5	4	3	4
63	3.95	20	18	7	12	14	3.5	4	4.5	4.5	7
60	4.5	9	11	5	9	9	--	--	--	--	3
60	3.95	16	14	6	10	11	3	3.5	--	3	4.5
57	4.5	6	10	4.5	--	8	--	--	--	--	--
57	3.95	10	11	5	9	9	--	--	4	--	3
54	4.5	4	9	4	8	7	--	--	--	--	--
54	3.95	6	10	4.5	8	8	--	--	--	--	--
54	3.15	14	12	5.5	10	10	3	3.5	4	3	4
51	4.5	3	8	--	7	6	--	--	--	--	--
51	3.95	4	9	4	--	7	--	--	--	--	--
51	3.15	9	10	5	9	8	--	--	--	--	--
48	4.5	--	--	--	--	--	--	--	--	--	--
48	3.95	3	8	--	7	6	--	--	--	--	--
48	3.15	5	9	4.5	8	7	--	--	--	--	--
45	4.5	--	7	3.5	6	5	--	--	--	--	--
45	3.95	--	7	3.5	--	--	--	--	--	--	--
45	3.15	3.5	8	4	7	6	--	--	--	--	--
42	4.5	--	--	--	--	4.5	--	--	--	--	--
42	3.95	--	--	--	6	5	--	--	--	--	--
42	3.15	3	7	--	--	--	--	--	--	--	--
39	4.5	--	6	--	--	--	--	--	--	--	--
39	3.95	--	6	--	--	4.5	--	--	--	--	--
39	3.15	--	--	3.5	6	5	--	--	--	--	--
33	4.5	--	--	--	--	4	--	--	--	--	--
33	3.15	--	--	--	--	4.5	--	--	--	--	--
27	4.5	--	--	--	--	--	--	--	--	--	--
27	3.15	--	--	--	--	4	--	--	--	--	--
21	4.5	--	--	--	--	3.5	--	--	--	--	--
21	3.15	--	--	--	--	3.5	--	--	--	--	--
15	4.5	--	--	--	--	3	--	--	--	--	--
15	3.15	--	--	--	--	--	--	--	--	--	--

* A dash in the table means that the burnup/enrichment combination is bounded by a higher burnup at the same enrichment. For example, the first dash under A-2 means that a 63/4.5 assembly would have a cooling time requirement of 14 years since this is the cooling time for a 66/4.5 assembly.

Table 1.2.10: Alternative Fuel Specifications (continued)

Maximum Burnup (GWd/mtU)	Minimum Enrichment (wt% ^{235}U)	B-1	B-2	B-3	B-4	B-5	B-6	B-7	B-8	B-9	B-10	B-11
		Minimum Cooling Time (Years)										
66	4.5	24	18	14	14	11	22	30	20	4	4	6
66	3.95	28	24	20	20	16	24	**	24	4	5	8
63	4.5	18	14	10	--	8	20	28	14	--	--	5
63	3.95	24	20	16	18	12	22	30	20	--	4.5	7
60	4.5	14	9	7	11	5.5	18	24	12	--	--	4.5
60	3.95	18	16	11	14	9	20	28	18	--	4	5.5
57	4.5	9	5.5	4	10	4	14	22	9	--	--	4
57	3.95	14	10	7	11	5.5	18	24	12	--	--	4.5
54	4.5	6	4	--	9	--	12	20	8	--	--	--
54	3.95	10	6	4	10	4	14	22	9	--	--	4
54	3.15	18	14	10	12	8	20	26	14	4	4	5
51	4.5	4	--	--	8	--	10	14	7	--	--	--
51	3.95	6	4	--	8	--	11	20	8	--	--	--
51	3.15	14	9	5.5	10	5	14	24	11	--	--	4.5
48	4.5	--	--	--	7	--	9	11	5.5	--	--	--
48	3.95	4	--	--	7	--	10	14	6	--	--	--
48	3.15	8	5	4	9	4	12	20	8	--	--	4
45	4.5	--	--	--	6	--	8	9	5	--	--	--
45	3.95	--	--	--	--	--	9	11	5.5	--	--	--
45	3.15	5	4	--	8	--	10	14	7	--	--	--
42	4.5	--	--	--	6	--	7	8	4.5	--	--	--
42	3.95	--	--	--	6	--	8	9	5	--	--	--
42	3.15	4	--	--	7	--	9	11	5.5	--	--	--
39	4.5	--	--	--	5.5	--	--	7	--	--	--	--
39	3.95	--	--	--	5.5	--	7	8	4.5	--	--	--
39	3.15	--	--	--	6	--	8	9	5	--	--	--
33	4.5	--	--	--	--	--	6	6	--	--	--	--
33	3.15	--	--	--	--	--	7	7	--	--	--	--
27	4.5	--	--	--	--	--	5	5	--	--	--	--
27	3.15	--	--	--	--	--	5.5	5.5	--	--	--	--
21	4.5	--	--	--	--	--	4.5	4.5	--	--	--	--
21	3.15	--	--	--	--	--	5	5	--	--	--	--
15	4.5	--	--	--	--	--	4	4	--	--	--	--
15	3.15	--	--	--	--	--	4.5	4.5	--	--	--	--

**- Not permitted for loading

Table 1.2.10: Alternative Fuel Specifications (continued)

Maximum Burnup (GWd/mtU)	Fuel Type	C-1
		Minimum Cooling Time (Years)
60	MOX	10.5
58.5	MOX	9.5
57	MOX	8.5
55.5	MOX	8
54	MOX	7

HOLTEC INTERNATIONAL COPYRIGHTED MATERIAL

Table 1.2.11: Typical Axial Burnup Profiles

Axial Section (1 = Top)	Burnup (GWd/mtU)	
	UO_2	MOX
1	31.08	27.44
2	40.97	36.12
3	48.91	44.62
4	53.6	50.07
5	56.45	53.58
6	58.21	55.94
7	59.08	57.29
8	59.62	58.01
9	59.96	58.53
10	60.06	58.90
11	60.11	59.01
12	60.19	59.12
13	60.17	59.26
14	60.1	59.23
15	60.15	59.24
16	60.14	59.34
17	60.03	59.30
18	60.09	59.27
19	60.09	59.34
20	59.98	59.33
21	60.03	59.26
22	60.02	59.26
23	59.89	59.19
24	59.83	58.95
25	59.65	58.64
26	59.25	58.18
27	58.61	57.14
28	57.16	55.14
29	54.75	52.09
30	50.54	47.00
31	42.74	38.37
32	32.43	28.71

HOLTEC INTERNATIONAL COPYRIGHTED MATERIAL

Table 1.2.12
[PROPRIETARY TEXT REMOVED]

HOLTEC INTERNATIONAL COPYRIGHTED MATERIAL

Table 1.2.13; [PROPRIETARY TEXT REMOVED]

HOLTEC INTERNATIONAL COPYRIGHTED MATERIAL

Table 1.2.14; Core Operating Requirements for Assemblies that need to meet the Burnup Requirements in Table 1.2.7

Parameter	Requirement
Assembly Average Specific Power	≤ 39.4 MW/MTU)
Assembly Average Moderator Temperature	≤ 597 K
Core Average Soluble Boron Concentration	≤ 700 ppmb

HOLTEC INTERNATIONAL COPYRIGHTED MATERIAL

FIGURE 1.2.1
[PROPRIETARY TEXT REMOVED]

HOLTEC INTERNATIONAL COPYRIGHTED MATERIAL

FIGURE 1.2.2
[PROPRIETARY TEXT REMOVED]

HOLTEC INTERNATIONAL COPYRIGHTED MATERIAL

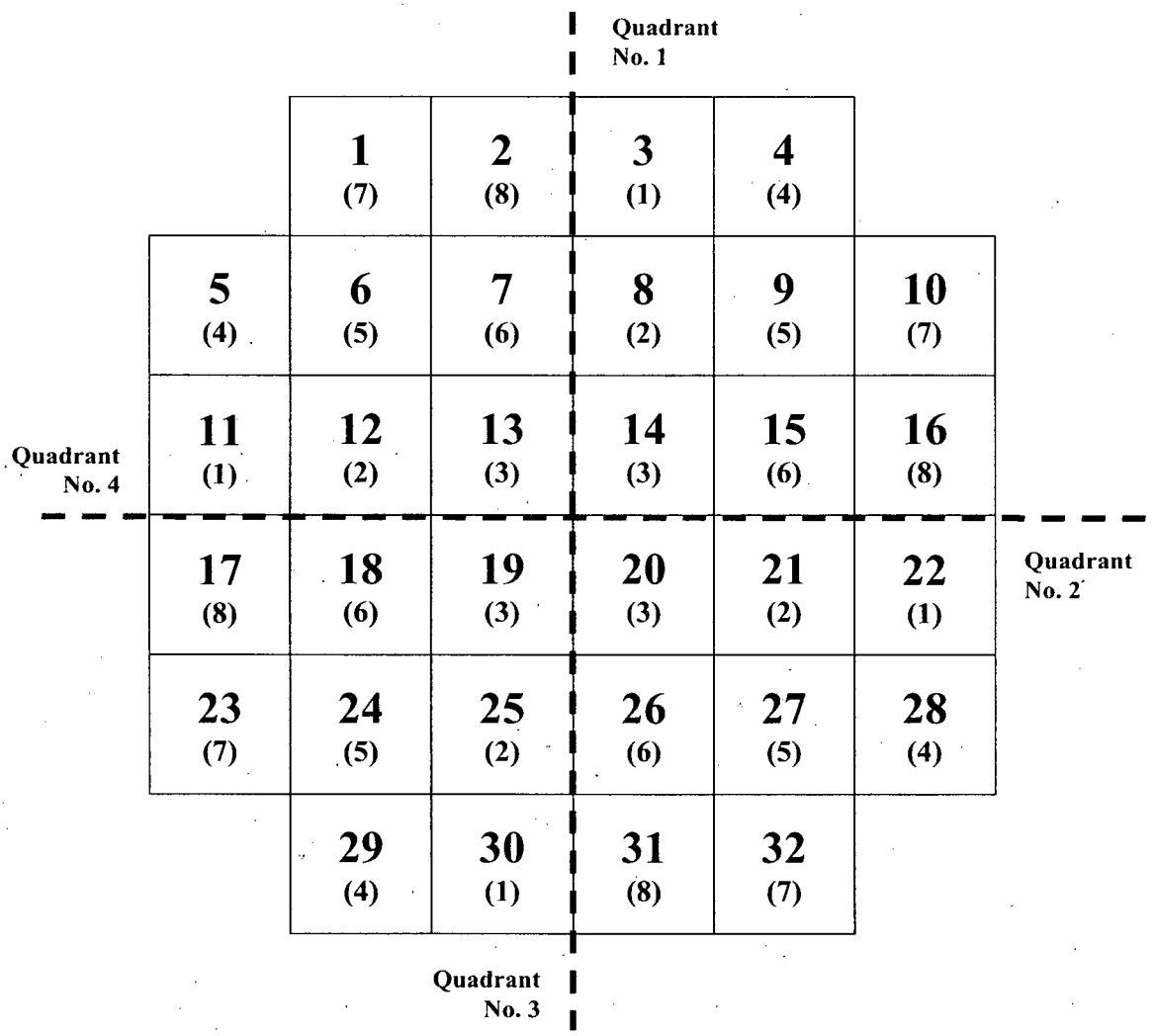

Notes:
1. **Numbers in parenthesis denote region number.**
2. **All quadrants are rotationally symmetric by region number.**
3. **Heat loads by cask, basket quadrant, and storage cell are specified in Table 1.2.3 and Table 1.2.8.**
4. **See Table 1.2.6a and 1.2.6b for more information.**

FIGURE 1.2.3: F-32 FUEL BASKET STORAGE CELL NUMBERING AND BASKET QUADRANT IDENTIFICATION

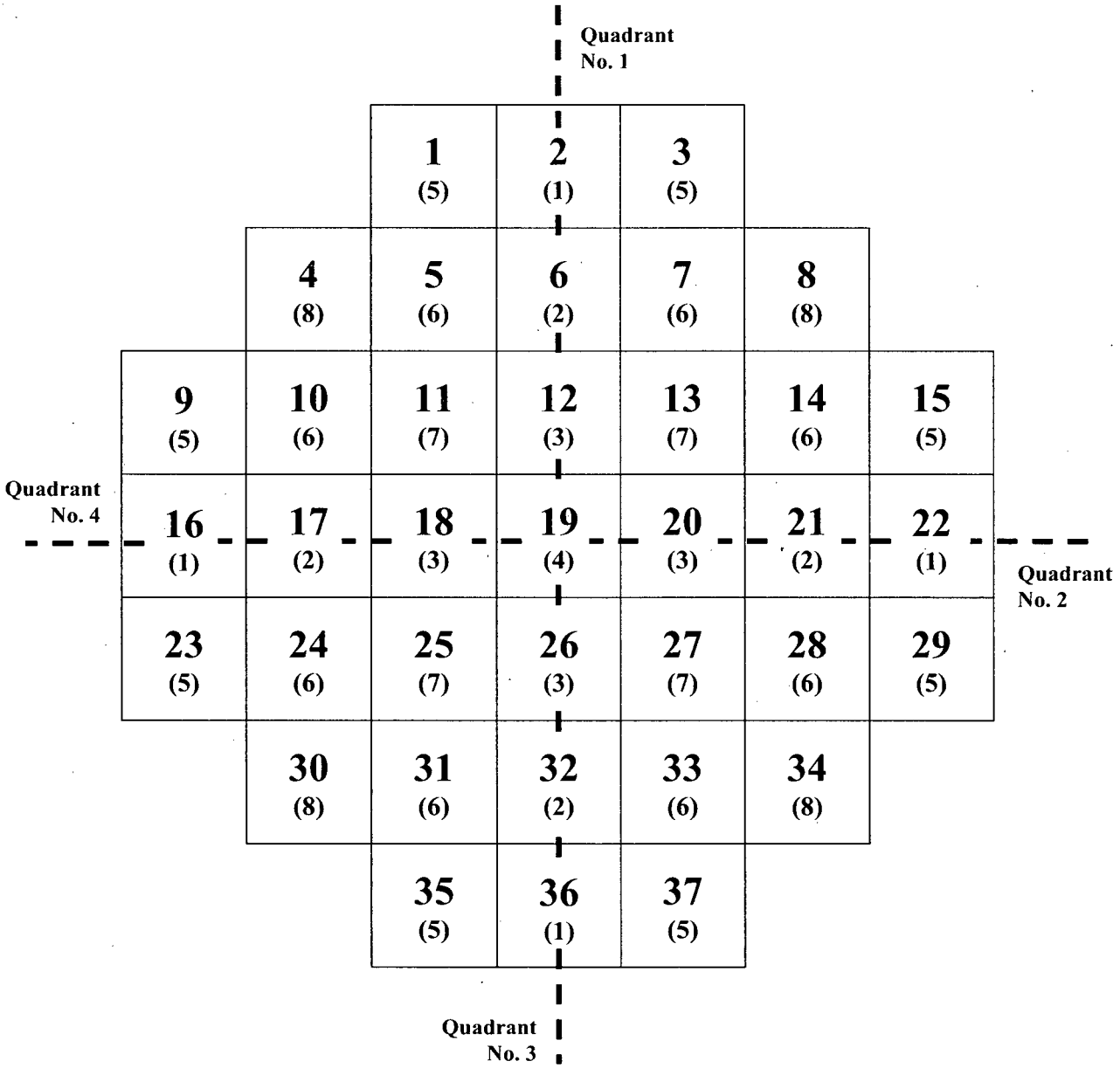

Notes:
1. **Numbers in parenthesis denote region number.**
2. **All quadrants are symmetric by region number.**
3. **Heat loads by cask, basket quadrant, and storage cell are specified in Table 1.2.3 and Table 1.2.9.**
4. **See Table 1.2.6a and 1.2.6b for more information.**

FIGURE 1.2.4: F-37 FUEL BASKET STORAGE CELLS NUMBERING AND BASKET QUADRANT IDENTIFICATION

HOLTEC INTERNATIONAL COPYRIGHTED MATERIAL

1.3 ENGINEERING DRAWINGS

This section contains a HI-STAR 180 Drawing Package prepared under Holtec's QA Program. This drawing package contains the details of the safety features considered in the analysis documented in this SAR. In particular, this drawing package includes:

- A list of materials and parts, including their safety significance status.
- All dimensions that define the package's *Critical Characteristics*.
- All interface dimensions to ensure fit-up between mating parts.
- Requisite information on *safety significant* parts such as the containment boundary parts as well as processes such as welding, non-destructive examinations, including appropriate weld symbols and NDE acceptance criteria.
- Details on configuration of gasket joints germane to their sealing function.
- Identification of the Containment System Boundary.
- Schematic of the personnel barrier, rail car, and support saddles.
- Design details on the impact limiters.

The manufacturing of the HI-STAR 180 components is required to be in strict compliance with the Drawing Package in this section.

HOLTEC INTERNATIONAL COPYRIGHTED MATERIAL

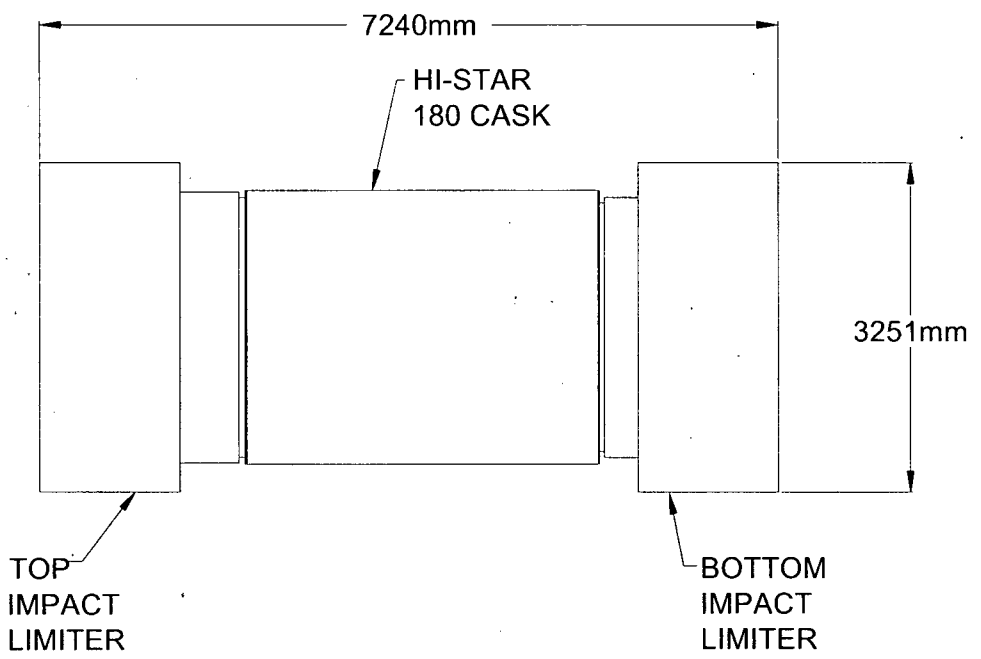

Note: Dimensions are nominal.

FIGURE 1.3.1: ILLUSTRATION OF HI-STAR 180 TYPICAL ASSEMBLY FOR TRANSPORT

HOLTEC INTERNATIONAL COPYRIGHTED MATERIAL

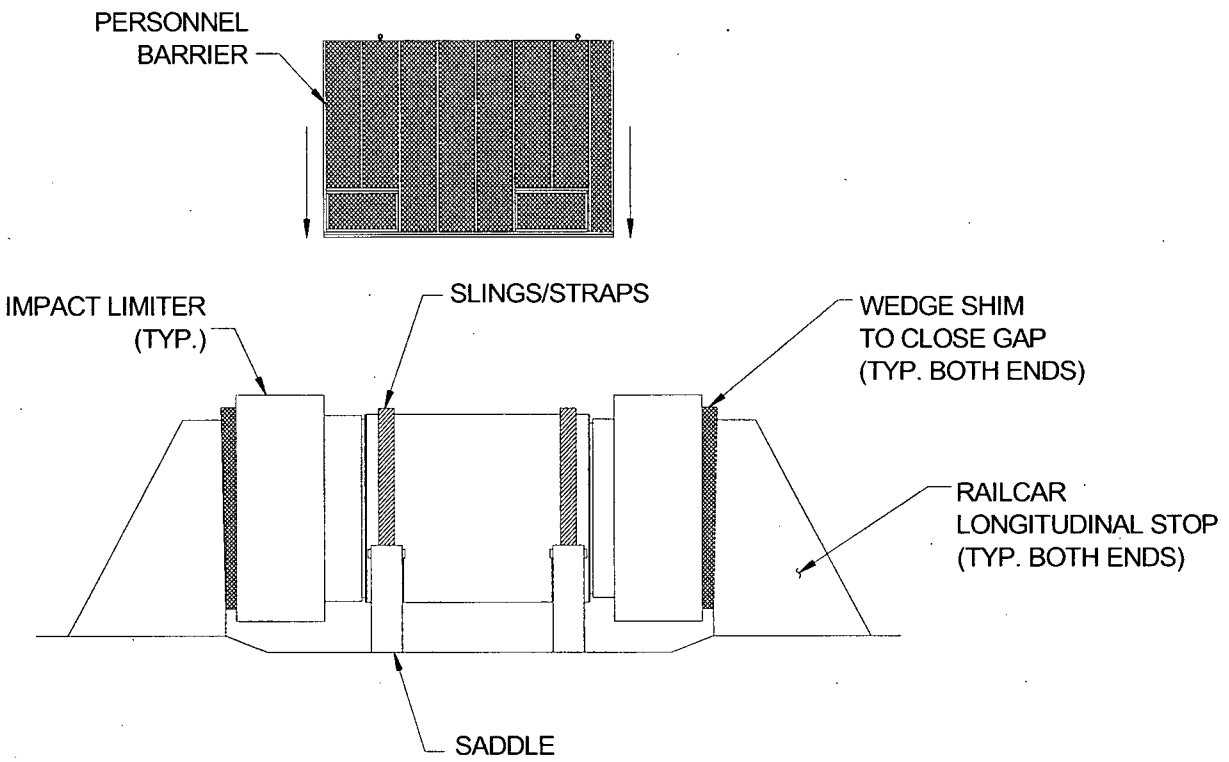

FIGURE 1.3.2: ILLUSTRATION OF HI-STAR 180 TYPICAL RAILCAR TRANSPORT CONFIGURATION

HOLTEC INTERNATIONAL COPYRIGHTED MATERIAL

1.4 SUMMARY OF COMPLIANCE WITH 10CFR71 REQUIREMENTS

The HI-STAR 180 Package complies with the requirements of 10CFR71 for a Type B(U)F-96 package. Analyses which demonstrate that the HI-STAR 180 Package complies with the requirements of Subparts E and F of 10CFR71 are provided in this SAR. The HI-STAR 180 Package complies with the general standards for all packages, 10CFR71.43, as demonstrated in Chapter 2. Under the tests specified in 10CFR71.71 (normal conditions of transport) the HI-STAR 180 Package is demonstrated to sustain no impairment of its safety function capability, enabling the HI-STAR 180 Package to meet the requirements of 10CFR71, Paragraphs 71.45, 71.51, and 71.55. Under the tests specified in 10CFR71.73 (hypothetical accident conditions) and 10CFR71.61 (special requirement for irradiated nuclear fuel shipments), the damage sustained by the HI-STAR 180 Package is shown to be within the permissible limits set forth in 10CFR71, Paragraphs 71.51, and 71.55.

The HI-STAR 180 Package meets the structural, thermal, containment, shielding and criticality requirements of 10CFR71, as described in Chapters 2 through 6. The package operations; and acceptance tests and maintenance program provided in Chapters 7 and 8 ensure compliance of the package with the requirements of 10CFR71.

The following is a summary of the information provided in Chapter 1, which in conjunction with the information provided in Chapters 2, 7 and 8 is directly applicable to verifying compliance with 10CFR71:

- The HI-STAR 180 Packaging description including the drawing package provided in Section 1.3 provides an adequate basis for evaluation of the HI-STAR 180 packaging against the 10CFR71 requirements for each technical criterion. Each drawing is identified, consistent with the text of the SAR, and contains appropriate annotations to explain and clarify information on the drawing.

- The NRC-approved Holtec International quality assurance program for the HI-STAR 180 packaging has been identified.

- The applicable codes and standards for the HI-STAR 180 Packaging design, fabrication, assembly, and testing have been identified in the drawing package in Section 1.3 and in Chapter 2.

- Allowable contents in the HI-STAR 180 Packaging are specified (in Section 1.2).

HOLTEC INTERNATIONAL COPYRIGHTED MATERIAL

1.5 REFERENCES

The following generic industry and Holtec produced references may have been consulted in the preparation of this document. Where specifically cited, the identifier is listed in the SAR text or table. Active Holtec Calculation Packages which are the repository of all relevant licensing and design basis calculations are annotated as "latest revision". Submittal of the latest revision of such Calculation Packages to the USNRC and other regulatory authorities during the course of regulatory reviews is managed under the company's Configuration Control system.

[1.0.1] Regulatory Guide 7.9, "Standard Format and Content of Part 71 Applications for Approval of Packaging for Radioactive Material", Revision 2, USNRC, March 2005.

[1.0.2] 10CFR Part 71, "Packaging and Transportation of Radioactive Materials", Title 10 of the Code of Federal Regulations, Office of the Federal Register, Washington, D.C.

[1.0.3] 49CFR173, "Shippers - General Requirements For Shipments and Packagings", Title 49 of the Code of Federal Regulations, Office of the Federal Register, Washington, D.C.

[1.0.4] "Safety Analysis Report for the HI-STAR 100 Package", Holtec Report HI-951251, latest revision, Docket No. 71-9261.

[1.0.5] "Final Safety Analysis Report for the HI-STAR 100", Holtec Report HI-2012610, latest revision, Docket No. 72-1008.

[1.2.1] American Society of Mechanical Engineers, "Boiler and Pressure Vessel Code", Section III, Div. 1, Subsection NB 2007.

[1.2.2] American Society for Testing and Materials, ASTM A-352-93, "Ferritic and Martensitic Steel Castings for Pressure-Containing Parts Suitable for Low-Temperature Service"

[1.2.3] Regulatory Guide 7.11, "Fracture Toughness Criteria of Base Material for Ferritic Steel Shipping Cask Containment Vessels with a Maximum Wall Thickness of 4 Inches (0.1m)", U.S. Nuclear Regulatory Commission, Washington, D.C., June 1991.

[1.2.4] Holtite-A: Development History and Thermal Performance Data, Holtec Report HI-2002396, 2002, Docket No. 72-1014. (Holtec Proprietary)

[1.2.5] Holtite-A: Results of Pre-and Post Irradiation Tests and Measurements, Holtec Report HI-2002420, 2003, Docket No. 72-1014. (Holtec Proprietary)

[1.2.6] "Qualification of METAMIC for Spent Fuel Storage Applications", Report 1003137, EPRI, Palo Alto, CA, October 2001.

[1.2.7] "HI-STORM 100 Final Safety Analysis Report", Holtec Report HI-2002444, latest revision, Docket No. 72-1014.

[1.2.8] USNRC Docket No. 72-1004 SER on NUHOMS 61BT (2002).

[1.2.9] "Safety Evaluation by the Office of Nuclear Reactor Regulation Related to Holtec International Report HI-2022871 Regarding Use of Metamic in Fuel Pool Applications," Facility Operating License Nos. DPR-51 and NPF-6, Entergy Operations, Inc., docket No. 50-313 and 50-368, USNRC, June 2003.

[1.2.10] "Sourcebook for Metamic Performance Assessment", by Dr. Stanley Turner, Holtec Report HI-2043215, Rev. 2, Docket No. 71-9261 (TAC L24029). (Holtec Proprietary)

[1.2.11] NUREG-0612, "Control of Heavy Loads at Nuclear Power Plants", U.S. Nuclear Regulatory Commission, Washington, D.C., July 1980.

[1.2.12] ANSI N14.6-1993, "Special Lifting Devices for Shipping Containers Weighing 10,000 Pounds (4500 Kg) or More", June 1993.

[1.2.13] Interim Staff Guidance ISG-11, Rev. 3, USNRC, November, 2003.

[1.2.14] Not Used

[1.2.15] Interim Staff Guidance ISG-19, Rev. 0, USNRC, May, 2003.

[1.2.16] ASME Boiler & Pressure Vessel Code, Section II, Part A, SA-352-LCC American Society of Mechanical Engineers, 2007.

[1.2.17] "Performance Characterization of Holtite-B as a Neutron Shielding Material", Holtec Report HI-2073684, Rev. 0. (Holtec Proprietary)*

[1.2.18] "Handbook of Aluminum - Alloy Production and Materials Manufacturing", Vol. 2, Edited by G.E. Totten and D.S. Mackenzie, CRC (Taylor and Francis Group), 2003.

* Supporting document submitted with the HI-STAR 180 License Application (Docket 71-9325).

[1.2.19] "Oxide Dispersion Strengthening" by Ansell et. als, ASME Convergence, Vol. 47, Gordon and Breach, NY (1966).

[1.2.20] "Increasing the Use of Fibre-Reinforced Composites in the Sasol Group of Companies: A Case Study", by Jacques Mouton, Ph.D. Dissertation, University of Durban, South Africa (2007).

[1.2.21] "Metals Handbook", Vol. 7, 9th Edition

[1.2.22] Not Used

[1.2.23] Turner, S.E., "Reactivity Effects of Streaming Between Discrete Boron Carbide Particles in Neutron Absorber Panels for Storage or Transport of Spent Nuclear Fuel," Nuclear Science and Engineering, Vol. 151, Nov. 2005, pp. 344-347.

[1.2.24] Natrella, M.G., "Experimental Statistics, "National Bureau of Standards Handbook 91, National Bureau of Standards, Washington, DC, 1963.

[1.2.25] "Metamic-HT Manufacturing Manual", Nanotec Metals Division, Holtec International (2009) (Holtec Proprietary).

[1.2.26] "Metamic-HT Purchasing Specification", Holtec Document ID PS-11 (2009) (Holtec Proprietary).

[1.2.27] "Metamic-HT Qualification Sourcebook", by I. Rampall, T.G. Haynes, and J. Menhart, Holtec Report No. HI-2084122, (2009) (Holtec Proprietary).

[1.2.28] "Application of Time-Temperature-Stress Parameters to High Temperature Performance of Aluminum Alloys", by J.G. Kaufman, Z. Long and S. Ningileri, Minerals, Metals & Materials Society, 2007.

[1.2.29] "Sampling Procedures and Tables for Inspection by Attributes", Military Standard MIL-STD-105E, (10/5/1989).

Appendix 1.A: Regulatory Guide 7.9 Compliance Matrix

In this appendix, the compliance of this SAR to the guidelines of Regulatory Guide 7.9 is documented.

Chapter 1			
R.G. 7.9 Section	**Description**	**SAR Section**	**Remarks**
1.	**GENERAL INFORMATION**	1.0	-
1.1	**Introduction**	1.1	-
	- Use of the package	1.1	-
	- Model number	1.1	-
	- Criticality Safety Index	1.1	-
1.2	**Package Description**	1.2	-
1.2.1	**Packaging**	1.2.1	-
	- Dimensions and maximum and minimum weights	1.2.1.2	-
	- Containment features	1.2.1.3	-
	- Neutron and Gamma Shield Features	1.2.1.5	-
	- Personnel barriers	1.2.1.1 d.	-
	- Criticality control features	1.2.1.6	-
	- Structural features	1.2.1.1 a., b., c., d. and 1.2.1.7	-
	- Tie-down devices	1.2.1.1 e. and 1.2.1.7	-
	- Impact limiters	1.2.1.1 c.	-
	- Outer shell or outer packaging	1.2.1.1 a.	-
	- Packaging closure devices	1.2.1.1 a., 1.2.1.3 and 1.2.1.4	
	- Heat transfer features	1.2.1.8	-
	- Packaging markings	1.2.1.10	-
1.2.2	**Contents**	1.2.2	
	- Identification and maximum quantity of radioactive material	1.2.2 and Table 1.2.3	-
	- Identification and maximum quantity of fissile material	1.2.2 and Table 1.2.3	-
	- Chemical and physical form	1.2.2	-
	- Location and configuration of contents within packaging	1.2.2 and 1.3	-
	- Identification and quantity of nonfissile materials used as neutron absorbers or moderators	1.2.2	-

HOLTEC INTERNATIONAL COPYRIGHTED MATERIAL

Chapter 1			
R.G. 7.9 Section	**Description**	**SAR Section**	**Remarks**
	- Chemical, galvanic reaction, generation of gas	1.2.2	-
	- Maximum weight of radioactive contents and maximum weight of payloads	1.2.2 and Table 1.2.3	-
	- Maximum decay heat	1.2.2	-
	- Loading restrictions	1.2.2	-
	- Additional information that is suitable for inclusion in the certificate of compliance	Tables 1.2.3 through 1.2.10; Figures 1.2.3 and 1.2.4	-
1.2.3	**Special Requirements for Plutonium**	1.2.3	-
	- Package content	1.2.3	-
1.2.4	**Operational Features**	1.2.4	-
	- Description of operational features	1.2.4	-
	- Schematic diagram showing valves, etc.	1.3	-
1.3	**Appendix**	1.3, 1.4, 1.5 1.A, and 1.B	-
	Drawing Package	1.3	-
	- Material list	1.3	-
	- Dimensions	1.3	-
	- Valves, etc.	1.3	-
	- Welder and welding procedure qualification requirements	1.3	-
	- Weld symbol, joint specification, NDE, acceptance standard	1.3	-
	- Gasketed joints – surface finish, flatness, gasket specification, gasket retention	1.3 and 2.2.1.1.6	-
	- References	1.5	-
	- Other supplemental information	1.4, 1.A and 1.B	-

Chapter 2			
RG. 7.9 Section	**Description**	**SAR Section**	**Remarks**
2.	**STRUCTURAL EVALUATION**	2.0	-
2.1	**Description of Structural Design**	2.1	-
2.1.1	**Discussion**	2.1.1	-
	- Principal structural members and systems	2.1.1	-
	- Reference of above items in drawings	2.1.1.1	-
	- Discussion of structural design and functions of the above items	2.1.1.1-2.1.1.3	-
2.1.2	**Design Criteria**		-
	- Description of load combinations and factors that serve as design criteria	2.1.2.1	-
	- Maximum allowable stresses and strains	2.1.2.2	-
	- Other structural failure modes (e.g., brittle fracture, fatigue, buckling)	2.1.2.2	-
	- Design criteria for impact evaluation	2.1.2.2	-
	- Codes and standards for material properties, design limits, and combinations of loads and stresses	2.1.2.2	-
	- Substitute design criteria	2.1.2.2	-
2.1.3	**Weights and Center of Gravity**		-
	- Weight of packaging and contents	2.1.3	-
	- Center of gravity	2.1.3	-
	- Sketch showing c.g.s	2.1.3	Refers to drawings and CAD program
2.1.4	**Identification of Codes and Standards for Package Design**	2.1.4	-
	- Identification of codes and standards in package design, fabrication, assembly, testing, maintenance, and use	2.1.4	-
2.2	**Materials**	2.2	-
2.2.1	**Material Properties and Specifications**	2.2.1	-
	- Mechanical properties used in structural analysis	2.2.1.1	-
	- Compression stress-strain curve for the material of the impact limiter	2.2.1.1.5 and Fig. 2.2.2	-
	- Properties at elevated temperatures	2.2.1	-
	- Sources of information	2.2.1	-
	- Properties from testing	2.2.1.1.3	Ref. [2.1.13] in Rev. 1 of this SAR

Chapter 2			
RG. 7.9 Section	**Description**	**SAR Section**	**Remarks**
2.2.2	**Chemical, Galvanic, or Other Reactions**		-
	- Possible chemical, galvanic, or other reactions	2.2.2	-
	- Coatings on external and internal package surfaces and any reaction from water inleakage	2.2.1.2.4, 2.2.1.2.5, and 2.2.2,	-
	- Generation of hydrogen or other gases from chemical of radiolytic interactions	2.2.2	-
2.2.3	**Effects of Radiation on Materials**	2.2.3	-
	- Aging or damaging effects of radiation on packaging materials	2.2.3	-
	- Degradation of seals, sealing materials, coatings, adhesives, and structural materials	2.2.3	-
2.3	**Fabrication and Examination**	2.3	-
2.3.1	**Fabrication**	2.3.1	-
	- Description of fabrication processes	2.3.1	-
	- Codes and standards used for design and fabrication	2.1.4	-
	- Specification for components with no codes or standards	2.3.2	-
2.3.2	**Examination**		-
	- Description of the methods and criteria used for fabrication acceptance	2.3.2	-
2.4	**General Requirements for All Packages**	2.4	-
2.4.1	**Minimum Package Size**	2.4.1	
	- Smallest overall dimension of the package	2.4.1	-
2.4.2	**Temper-Indicating Feature**	2.4.2	-
	- Package closure system description	2.4.2	-
2.5	**Lifting and Tie-Down Standards for All Packages**	2.5	-
2.5.1	**Lifting Devices**	2.5.1	-
	- Identification of all lifting devices for the package or its lid	2.5.1	-
	- Compliance with 10CFR 71.45(a)	2.5.1	-
	- Drawings or sketches of lifting devices	2.5.1 and Figure 2.5.1	-

Chapter 2			
RG. 7.9 Section	**Description**	**SAR Section**	**Remarks**
	- Effect of forces imposed by the lifting devices	2.5.1.2	-
	- Documented values of yield stresses of materials including failure under excessive loads	2.2, 2.5.1.3	-
2.5.2	**Tie-Down Devices**	2.5.2	-
	- Description of tie-down system	2.5.2	-
	- Drawings or sketches	1.3	-
	- Compliance with 10CFR 71.45(a)	2.5.2	-
	- Effect of imposed forces on vital components	-	Not Applicable
	- Documented values of yield stresses of materials including failure under excessive loads	-	Not Applicable
2.6	**Normal Conditions of Transport**		-
	- Consideration of most limiting initial conditions	2.1.2	-
	- consideration of most damaging orientations	2.1.2	-
	- Method and calculations used in the package evaluation	2.B	-
	- Description and justification of assumptions	2.B	-
	- Sketches and force diagrams	2.6.1	-
	- Analysis equations and source or derivation	-	Numerical modeling
	- Computer programs description and benchmarking	2.A	-
	- Computer model, description and justification of finite element discretization	2.A	-
	- Sensitivity studies	2.A	-
	- Description of modeling of bolting connections	2.B	-
	- Impact analysis showing energy dissipation, local deformation, dynamic forces, stress-strain to components, structural stability, combination with stresses due to thermal gradient, etc.	2.6.1	Ref. [2.6.1]
	- Results compared with acceptance	2.6.1	-

Chapter 2			
RG. 7.9 Section	**Description**	**SAR Section**	**Remarks**
	criteria.		
	- Demonstration of effectiveness of the package	2.6.1	-
2.6.1	**Heat**	2.6.1	-
2.6.1.1	**Summary of Pressures and Temperatures**	2.6.1.1	-
	- Summary of pressures and temperatures derived in Section 3	2.6.1.1	-
2.6.1.2	**Differential Thermal Expansion**	2.6.1.2	-
	- Calculations of deformation and stresses under steady-state and transient conditions	2.6.1.2	-
	- Demonstration of package integrity	2.6.1.2	-
2.6.1.3	**Stress Calculations**	2.6.1.3	-
	- Stresses due to combined effects of thermal gradients, pressure, and mechanical loads	2.6.1.2	-
	- Repeated cycles of thermal loading causing fatigue failures or extensive accumulations of deformation	2.6.1.3.2	-
2.6.1.4	**Comparison with Allowable Stresses**	2.6.1.4	-
	- Comparison of resulting stresses with the design criteria	2.6.1.4	-
2.6.2	**Cold**		-
	- Effect of cold conditions on the package including material properties and possible freezing and shrinkage	2.6.2	-
	- Address of brittle fracture	2.6.2	References 2.1.1.2
2.6.3	**Reduced External Pressure**		-
	- Effect of reduced external pressure	2.6.3	-
2.6.4	**Increased External Pressure**	2.6.4	-
	- Effect of increase external pressure	2.6.4	References bounding analysis in 2.7
	- Evaluation of buckling	2.6.4	References 2.7
2.6.5	**Vibration**	2.6.5	-
	- Evaluation of effects of vibration	2.6.5	References calc. package [2.1.12]
2.6.6	**Water Spray**	2.6.6	-
	- Water spray test	2.6.6	-
2.6.7	**Free Drop**	2.6.7	-

Chapter 2			
RG. 7.9 Section	**Description**	**SAR Section**	**Remarks**
	- Package evaluation for free drop	2.6.7	Pointer to 2.6.1.4
	- Discussion of drop orientation	2.6.1.4	-
2.6.8	**Corner Drop**	2.6.8	-
	- Effects of corner drop	2.6.8	-
2.6.9	**Compression**	2.6.9	-
	- Effects of compression on package	2.6.9	-
2.6.10	**Penetration**	2.6.10	-
	- Effects of penetration on package	2.6.10	-
2.7	**Hypothetical Accident Conditions**	2.7	-
2.7.1	**Free Drop**	2.7.1	-
	- Effects of lead slump	2.7.1	-
	- Closure lid bolt design	2.7.1	-
	- Buckling of package components	2.7.1	-
	- Effects on other package components	2.7.1	-
2.7.1.1	**End Drop**	2.7.1.1	-
	- Effects of end drop on package	2.7.1.1	Details in [2.6.1]
2.7.1.2	**Side Drop**	2.7.1.2	-
	- Effects of side drop on package	2.7.1.2	Details in [2.6.1]
2.7.1.3	**Corner Drop**	2.7.1.3	-
	- Effects of corner drop on package	2.7.1.3	Details in [2.6.1]
2.7.1.4	**Oblique Drop**	2.7.1.4	-
	- Effects of oblique drop on package	2.7.1.4	Details in [2.6.1]
2.7.1.5	**Summary of Results**	2.7.1.5	-
	- Condition of package after each drop	2.7.1.5	-
2.7.2	**Crush**	2.7.2	-
	- Effects of dynamic crush test	2.7.2	-
2.7.3	**Puncture**	2.7.3	-
	- Description of the effects of puncture on the package and identification and justification of orientation for maximum damage	2.7.3	-
2.7.4	**Thermal**	2.7.4	-
	- Initial condition of package for fire test	2.7.4	-
	- Temperature resulting from fire and increase in gas inventory	2.7.4	-
	- Maximum thermal stresses during or after fire	2.7.4	No interference
2.7.4.1	**Summary of Pressures and Temperatures**	2.7.4.1	-
	- Summary of temperatures and pressures	2.7.4.1	Refers to 3.4

Chapter 2			
RG. 7.9 Section	**Description**	**SAR Section**	**Remarks**
2.7.4.2	**Differential Thermal Expansion**	2.7.4.2	-
	- Circumferential and axial deformations and stresses due to differential thermal expansion	2.7.4.2	Refers to 3.4.4
2.7.4.3	**Stress Calculations**	2.7.4.3	-
	- Calculation of stresses	2.7.4.3	Refers to calc package [2.1.12]
2.7.4.4	**Comparison and Allowable Stresses**	2.7.4.4	
	- Comparison of results with the design criteria	2.7.4.4	Table 2.7.5
2.7.5	**Immersion – Fissile Materials**	2.7.5	-
	- Effects and consequences of water immersion test condition	2.7.5	-
2.7.6	**Immersion - All Packages**	2.7.6	-
	- Evaluation	2.7.6	Refers to 2.7.7, which is bounding
2.7.7	**Deep Water Immersion Test**	2.7.7	-
	- Evaluation	2.7.7	-
2.7.8	**Summary of Damage**	2.7.8	-
	- Summary of condition after the accident test sequence	2.7.8	-
	- Relation of the package condition with the acceptance standards	2.7.8	-
2.8	**Accident Conditions for Air Transport of Plutonium**	2.8	-
	- Address accident conditions	2.8	-
2.9	**Accident Conditions for Fissile Material Packages for Air Transport**	2.9	-
	- Address accident conditions	2.9	-
2.10	**Special Form**	2.10	
	- Contents	2.10	-
2.11	**Fuel Rods**	2.11	
	- Containment in cladding	2.11	-
2.12	**Appendix**	2.12 2.A, 2.B	
	- List of references	2.12	-
	- Pages from reference documents	-	Not Applicable
	- Computer code description	2.A	-

HOLTEC INTERNATIONAL COPYRIGHTED MATERIAL

Chapter 2			
RG. 7.9 Section	**Description**	**SAR Section**	**Remarks**
	- Input and output files	-	Provided as supporting data files with license application
	Other supplemental information	2.B	-

Chapter 3			
RG. 7.9 Section	**Description**	**SAR Section**	**Remarks**
3.	**THERMAL EVALUATION**	3.0	-
3.1	**Description of Thermal Design**	3.1	-
	- Thermal design features and operating characteristics	3.1	-
	- Thermal criteria	3.1	-
	- Thermal analysis results	3.1.3	-
	- Minimum and maximum decay heat loads	1.2	-
3.1.1	**Design Features**	3.1.1	-
	- Package geometry and materials of construction	1.2, 1.3	-
	- Structural and mechanical features	1.2	-
3.1.2	**Content's Decay Heat**	3.1.2	-
	- Maximum decay heat and radioactivity of contents	1.2	-
	- Derivation of decay heat	1.2	-
3.1.3	**Summary Tables of Temperatures**	3.1.3	-
	- Summary of maximum and minimum temperatures under normal and accident conditions	3.1.3	-
	- Maximum temperatures of package components at fire initiation	3.1.3	-
	- Post fire steady state condition	3.1.3	-
3.1.4	**Summary Tables of Maximum Pressures**	3.1.4	-
	- Summary of maximum pressures under normal and accident conditions	3.1.4	-
3.1.5	- Cask Surface Temperature Evaluation	3.1.5	
3.2	**Material Properties and Component Specifications**	3.2	-
3.2.1	**Material Properties**	3.2.1	-
	- Thermal properties of materials	3.2.1	-
	- Liquids and gases within the package	3.2.1	-
	- Thermal absorptivities and emissivities for package surface	3.2.1	-
	- Temperature dependent properties	3.2.1	-
	- References for data	3.5	-
3.2.2	**Component Specifications**	3.2.2	-
	- Technical specifications of components	3.2.2	-

Chapter 3			
RG. 7.9 Section	**Description**	**SAR Section**	**Remarks**
	- Operating pressure range and temperature limits for valves or seals	3.2.2	-
	- Performance test data for insulation and coatings	2.2	-
	- Maximum allowable service temperatures and pressures for package components	3.2	-
	- Minimum allowable service temperature for components	3.2	-
3.3	**Thermal Evaluation under Normal Conditions of Transport**	3.3	-
	- Description of thermal evaluation	3.3	-
	- Results and comparison with allowable limits of temperatures, pressures, etc.	3.3	-
	- Margins of safety	3.3	-
	- Thermal evaluations methods and calculations	3.3	-
	- Assumptions	3.3	-
	- Computer program description, end benchmarking	3.5	-
	- Computer models and modeling details	3.3	-
	- Temperature data for gaskets, valves, and containment boundaries	3.1.3	-
	- Interior and exterior temperatures	3.1.3	-
3.3.1	**Heat and Cold**	3.3.1	-
	- Degradation of heat transfer capability of the packaging	3.3.1	-
	- Changes in material conditions	3.3.1	-
	- Changes affecting containment, shielding, or criticality	3.3.1	-
	- Ability to withstand accident conditions	3.3.1	-
	- Maximum surface temperature requirements	3.3.1	-
3.3.2	**Maximum Normal Operating Pressure**	3.3.2	-
	- Maximum normal operating pressure	3.3.2	-

Chapter 3			
RG. 7.9 Section	**Description**	**SAR Section**	**Remarks**
	- Sources of gases (gases initially present, vapor from contents, helium from radioactive decay, hydrogen and other gases from material decomposition, fuel rod failure, etc.) and potential for flammable mixture	3.3.2	-
3.3.3	Time-to-Boil Limits	3.3.3	
3.3.4	Evaluation of Fuel Drying	3.3.4	
3.4	**Thermal Evaluation under Hypothetical Accident Conditions**	3.4	-
	- Accident conditions applied sequentially	3.4	-
3.4.1	**Initial Conditions**	3.4.1	-
	- Identification of initial conditions, and justification	3.4.1	-
3.4.2	**Fire Test Conditions**	3.4.2	-
	- Detailed analysis description	3.4.2	-
3.4.3	**Maximum Temperatures and Pressure**	3.4.3	-
	- Transient peak temperatures of components for during and after the fire, and the maximum temperatures from post-fire steady state condition	3.4.3	-
	- Temperatures at locations that are significant to safety analysis and review	3.1.3	-
	- Consideration of thermal combustion or decomposition, fuel rod failure, phase changes, etc.	3.4.3	-
	- Description of damage to the package, assessment of structural damage, breach of containment, and loss of shielding	3.4.3	-
3.4.4	**Maximum Thermal Stresses**	3.4.4	-
	- Evaluation of thermal stress condition during the fire and subsequent cooldown condition	3.4.4	-
3.5	**Appendix**	3.5	-
	- References	3.5	-
	- Computer program benchmarking	3.3	-

HOLTEC INTERNATIONAL COPYRIGHTED MATERIAL

Chapter 3			
RG. 7.9 Section	**Description**	**SAR Section**	**Remarks**
	- Pages from non-public domain reference documents	Complete references included with application.	
	- Other supplemental information	Provided in calculation package included in the application.	-

Chapter 4			
RG. 7.9 Section	**Description**	**SAR Section**	**Remarks**
4.	**CONTAINMENT**	4.0	-
4.1	**Description of the Containment System**	4.1	-
	- Definition and description of containment system	4.1	-
	- Identification of containment boundary	4.1	-
	- Sketch of the containment system	4.1	Figures 4.1.1 through 4.1.3
	- Containment system penetrations and method of closure	4.1.2, 4.1.4	-
	- Performance specification of valves and pressure relief devices	4.1.1	-
	- Protection against unauthorized operation	4.1.4	-
	- Positive fastening devices	4.1.4	-
	- Preclusion of continuous venting	4.1	-
4.2	**Containment Under Normal Conditions of Transport**	4.2	-
	- Evaluation of containment system	4.2.1	
	- Releasable source term	4.2.1	Leaktight per ANSI N14.5
	- Maximum internal pressure	3.1	-
	- Structural performance of containment system, including seals, closure bolts, and penetrations	2.6	-
4.3	**Containment under Hypothetical Accident Conditions**	4.3	-
	- Evaluation of containment system	4.3.1	-
	- Compliance with 10CFR71.51(a)(2)	4.3.1	Leaktight per ANSI N14.5
	- Structural performance of the containment system.	2.7	-
4.4	**Leakage Rate Tests for Type B Packages**	4.4	-
	- Description of leakage test including newly fabricated packaging, periodic tests, and pre-shipment tests	4.4.1, 4.4.2	-
4.5	**Appendix**	-	-
	- References	4.5	-

HOLTEC INTERNATIONAL COPYRIGHTED MATERIAL

Chapter 4			
RG. 7.9 Section	**Description**	**SAR Section**	**Remarks**
	- Applicable pages from reference documents	-	Not Applicable
	- Supporting information and analysis	-	Not Applicable
	- Input and output files	-	Provided as supporting data files with license application

Chapter 5			
RG. 7.9 Section	**Description**	**SAR Section**	**Remarks**
5.	**SHIELDING EVALUATION**	5.0	-
5.1	**Description of Shielding Design**	5.1	-
5.1.1	**Design Features**	5.1.1	-
	- Description of shielding design features	5.1.1	-
	- Dimensions, tolerances, materials, and densities of neutron and gamma shielding materials	5.3, 1.3	-
5.1.2	**Summary Table of Maximum Radiation Levels**	5.1.2	-
	- Maximum dose rates for normal conditions – on package surface and 2 meter from package surface	5.1.2.1, 5.4.6	-
	- Compare normal condition dose rates with 10CFR71.47(a) limits	5.1.2.1	-
	- Maximum dose rates for accident conditions – 1 meter from package surface	5.1.2.2, 5.4.5	-
	- Compare accident condition dose rates with 10CFR71.51(a)(2) limits	5.1.2.2	-
5.2	**Source Specification**		-
	- Description of content source terms	5.2	-
	- Discussion of fuel burnup, power density, and cooling times	5.2, 1.2.2	-
5.2.1	**Gamma Source**	5.2.1	-
	- Quantity of radioactive material	5.2	-
	- Gamma decay source strength	5.2.1	-
	- Description of method used to determine gamma source strength and distribution	5.2, 5.2.1	-
5.2.2	**Neutron Source**	5.2.2	-
	- Quantity of radioactive material	5.2	-
	- Neutron decay source strength	5.2.2	-
	- Description of method used to determine neutron source strength and distribution	5.2, 5.2.2	-
5.3	**Shielding Model**	5.3	-
5.3.1	**Configuration of Source and Shielding**	5.3.1	-
	- Description of the model	5.3.1	-

Chapter 5			
RG. 7.9 Section	**Description**	**SAR Section**	**Remarks**
	- Effects of the tests on the packaging and its contents	5.3.1.1	-
	- Sketches (to scale) and dimensions of shielding materials	5.3.1	-
	- Dimensions of transport vehicle and package location	5.3.1.1	-
	- Dose point locations in the shielding model	5.3.1	-
	- Treatment of voids, streaming paths, and irregular geometries in the model	5.3.1.3	-
5.3.2	**Material Properties**	5.3.2	-
	- Description of material properties including any changes under normal transport and accident conditions	5.3.2	-
	- Source data of any uncommon materials	5.3.2	-
5.4	**Shielding Evaluation**	5.4	-
5.4.1	**Methods**	5.4.1	-
	- Description of methodology	5.4.1	-
	- Description of special source distribution	5.4.1	-
	- Computer program description and bases for selecting the program	5.4.1	-
	- Basic input parameters	5.4.1	-
	- Discussion of attenuation and removal cross-sections	-	Not Applicable- Full set of contiguous energy cross section used
	- Discussion of buildup factors	-	Not applicable to Monte Carlo Analyses
5.4.2	**Input and Output Data**	5.4.2	-
	- Identification of key input data	5.4.2	-
	- Representative input/output file	5.4.2, 5.A, 5.B	-
	- Demonstration of code convergence	5.4.1	-
5.4.3	**Flux-to-Dose-Rate Conversion**	5.4.3	-
	- Tabulation of flux-to-dose-rate conversion factors as function of energy	5.4.3	-
	- References supporting data	5.4.3	-

HOLTEC INTERNATIONAL COPYRIGHTED MATERIAL

Chapter 5			
RG. 7.9 Section	**Description**	**SAR Section**	**Remarks**
5.4.4	**External Radiation Levels**	5.4.4	-
	- Results of radiation analysis for normal condition	5.4.4	-
	- Locations of maximum dose rates for normal condition	5.4.4	-
	- Demonstration of the variation of the normal condition dose rates and their consistency with the geometry and the shielding characteristics of the package	5.4.4	-
	- Results of radiation analysis for accident conditions	5.4.4	-
	- Locations of maximum dose rates for accident conditions	5.4.4	-
	- Demonstration of the variation of the accident condition dose rates and their consistency with the geometry and the shielding characteristics of the package	5.4.4	-
5.5	**Appendix**	5.5, 5.A, 5.B, 5.C	-
	- References	5.5	-
	- Pages from referenced document	none	-
	- Analytical procedures / assumptions	none	-
	- Test results	none	-
	- Photographs	none	-
	- Computer program	none	-
	- Other supplemental information	5.C	Loading Plan Example
	- Input and output files	Sample input files in 5.A, 5.B	Additional input and output files provided as supporting data files with license application

Chapter 6			
RG. 7.9 Section	**Description**	**SAR Section**	**Remarks**
6.	**CRITICALITY EVALUATION**	6.0	-
6.1	**Description of Criticality Design**	6.1	-
6.1.1	**Design Features**	6.1.1	-
	- Description of design features	6.1.1	-
	- Discussion on confinement system, neutron absorbing and moderating materials, flux traps, spacers, etc.	6.1.1	-
6.1.2	**Summary Table of Criticality Evaluation**	6.1.2	-
	- Summary of criticality analysis for a single package, an array of undamaged packages, and an array of damaged packages	6.1.2	-
	- Maximum k_{eff}, bias, number of packages evaluated, etc.	6.1.2	-
6.1.3	**Criticality Safety Index**	6.1.3	-
	- Criticality Safety Index	6.1.3	-
6.2	**Fissile Material Contents**	6.2	-
	- Description of fissile materials	6.2	-
	- Mass, dimensions, physical and chemical composition, density, moisture, and other characteristics	6.2	-
6.3	**General Considerations**	6.3	-
	- General considerations for criticality evaluation	6.3	-
6.3.1	**Model Configuration**	6.3.1	-
	- Description	6.3.1	-
	- Sketches identifying materials used	6.3.1	-
	- Differences between model and actual package and justification	6.3.1	-
6.3.2	**Material Properties**	6.3.2	-
	- Mass densities and atomic number densities	6.3.2, 6.B	-
	- Differences between normal and accident conditions	6.3.2	-
	- Address of materials relevant to criticality design, such as poisons, foams, plastics, and other hydrocarbons	6.3.2	-

Chapter 6			
RG. 7.9 Section	**Description**	**SAR Section**	**Remarks**
6.3.3	**Computer Codes and Cross-Section Libraries**	6.3.3	-
	- Methodology to calculate effective neutron multiplication constant	6.3.3, 6.B	-
	- Description of computer code	6.3.3	-
	- Bases for the specific program and cross-sections	6.3.3	-
	- Key input data – neutrons per generation, number of generations, convergence criteria, mesh selection, etc.	6.3.3	-
6.3.4	**Demonstration of Maximum Reactivity**	6.3.4	-
	- Demonstration of the most reactive configuration	6.3.4, 6.3.4.5, 6.3.5	-
	- Identification of the optimum combination of internal moderation and interspersed moderation	6.3.4	-
	- Consideration of moderation by water and any hydrogen-containing packaging materials	6.3.4	-
	- Consideration of preferential flooding	6.3.4	-
	- Consideration of partial loading	6.3.6	-
6.4	**Single Package Evaluation**	6.4	-
6.4.1	**Configuration**	6.4.1	-
	- Demonstration that a single package subcritical under normal and accident conditions	6.4.1	-
	- Consideration of the most reactive credible configuration	6.4.1, 6.3.4	-
	- Consideration of water moderation to the most reactive credible extent	6.4.1, 6.3.4	-
	- Consideration of reflection on all sides of containment / reflection by the package materials	6.4.1	-
6.4.2	**Results**	6.4.2	-
	- Presentation of results	6.4.2	-
6.5	**Evaluation of Package Arrays under Normal Conditions of Transport**	6.5	-
6.5.1	**Configuration**	6.5.1	-
	- Evaluation of an array of packages	6.5.1	-

Chapter 6			
RG. 7.9 Section	**Description**	**SAR Section**	**Remarks**
	- Most reactive configuration with nothing between packages	6.5.1, 6.3.4	-
	- Most restrictive credible configuration	6.5.1, 6.3.4	-
	- Consideration of full water reflection	6.5.1, 6.3.4	-
6.5.2	**Results**	6.5.2	-
	- Presentation of results	6.5.2	-
	- Identification of most restrictive array configuration	6.5.2	-
6.6	**Package Arrays under Hypothetical Accident Conditions**	6.6	-
6.6.1	**Configuration**	6.6.1	-
	- Evaluation of an array of packages	6.6.1	-
	- Most reactive configuration	6.6.1, 6.3.4	-
	- Optimum interspersed hydrogenous moderation	6.6.1, 6.3.4	-
	- Most reactive credible configuration	6.6.1, 6.3.4	-
	- Consideration of full water reflection	6.6.1, 6.3.4	-
6.6.2	**Results**		-
	- Presentation of results	6.6.2	-
	- Identification of most restrictive array configuration	6.6.2	-
6.7	**Fissile Material Packages for Air Transport**	6.7	-
6.7.1	**Configuration**	-	Not applicable
6.7.2	**Results**	-	Not applicable
6.8	**Benchmark Evaluation**		-
	- Description of methods	6.A, 6.B.3	-
	- Results of benchmark calculations	6.A, 6.B.3	-
6.8.1	**Applicability of Benchmark Experiments**	-	-
	- Description of experiment	6.A, 6.B.3	-
	- Applicability of the benchmarks	6.A, 6.B.3	-
	- References	6.A, 6.B.3	-
	- Overall quality of the benchmark experiments and uncertainties	6.A, 6.B.3	-
	- Results of benchmark calculations	6.A, 6.B.3	-

Chapter 6			
RG. 7.9 Section	**Description**	**SAR Section**	**Remarks**
6.8.2	**Bias Determination**		-
	- Results of benchmark calculations and the method used to account for biases, uncertainties	6.A, 6.B.3	-
	- Consideration of pitch-to-rod diameter, assembly separation, and neutron absorber material	6.A	-
6.9	**Appendix**	6.9, 6.A, 6.B, 6.C, 6.D, 6.E	-
	- References	6.9	-
	- Pages from referenced documents	-	none
	- Assumptions and analytical procedures	6.B	Burnup Credit
	- test results	-	none
	- Photograph	-	none
	- Computer code descriptions	-	none
	- Input / output files for representative or most limiting cases	Sample Input Files in Appendices 6.C, 6.D, 6.E	Additional input and output files provided as supporting data files with license application

HOLTEC INTERNATIONAL COPYRIGHTED MATERIAL

Chapter 7			
R.G. 7.9 Section	**Description**	**SAR Section**	**Remarks**
7.	**PACKAGE OPERATIONS**	7.0	-
7.1	**Package Loading**	7.1	-
7.1.1	**Preparation for Loading**	7.1.1	-
	- Operations for preparing the package for loading	7.1.1	-
	- Special control and precautions for handling	7.1.1	-
	- Inspections of gaskets, criteria for replacement, and repair process	7.1.1	-
	- Inspection of closure devices, and criteria for replacement	7.1.1	-
7.1.2	**Loading of Contents**	7.1.2	-
	- Loading of package contents	7.1.2.1	-
	- Closing of package	7.1.2.2	-
7.1.3	**Preparation for Transport**	7.1.3	-
	- Radiation and contamination survey	7.1.2.2, 7.1.3	-
	- Leakage testing of package	7.1.2.2	-
	- Measurement of package surface temperature	7.1.3	-
	- Package tie-down	7.1.3	-
	- Temper-indicating devices	7.1.3	-
7.2	**Package Unloading**	7.2	-
	- Inspections, tests, and special preparations for unloading	7.2.1	-
	- Operations used to ensure safe removal of fission gases, contaminated coolant, and solid contaminants	7.2.2	-
7.2.1	**Receipt of Package from Carrier**	7.2.1	-
	- Radiation and contamination surveys	7.2.1	-
	- Inspection of temper-indicating device	7.2.1	-
	- Special control and precautions	7.2.1	-
7.2.2	**Removal of Contents**	7.2.2	-
	- Operations and method for opening and removing package contents	7.2.2	-
	- Address of the requirements of 10CFR20.1906	7.2.1	-

HOLTEC INTERNATIONAL COPYRIGHTED MATERIAL

Chapter 7			
R.G. 7.9 Section	**Description**	**SAR Section**	**Remarks**
7.3	**Preparation of Empty Package for Transport**	7.3	-
	- Description of inspection, tests, and special preparations	7.3.1, 7.3.2	-
	- Address requirements of 49CFR173.428	7.3.2	-
7.4	**Other Operations**	-	Not Applicable
	- Special operational controls	-	Not Applicable System is completely passive
7.5	**Appendix**	7.A	-
	- References	7.5	-
	- Other supplemental information	-	-
	- Graphic presentation	7.A	-
	- Input and output files	-	Provided as supporting data files with license application

Chapter 8			
RG. 7.9 Section	**Description**	**SAR Section**	**Remarks**
8.	**ACCEPTANCE TESTS AND MAINTENANCE PROGRAM**	8.0	-
8.1	**Acceptance Tests**	8.1	-
	- Description of tests	8.1	-
	- Acceptance criteria of tests	8.1	-
8.1.1	**Visual Inspections and Measurements**	8.1.1	-
	- Description of visual inspections	8.1.1	-
	- Acceptance criteria for inspections	8.1.1	-
8.1.2	**Weld Examinations**	8.1.2	-
	- Description of welding examinations	8.1.2	-
	- Identification of specs for weld performance, NDE, and acceptance	8.1.2	-
8.1.3	**Structural and Pressure Tests**	8.1.3	-
	- Description of structural / pressure tests	8.1.3	-
	- Sensitivity of the tests	-	Not Applicable
	- Actions when criteria are not met	-	Criteria must be met
8.1.4	**Leakage Tests**	8.1.4	-
	- Description of leakage tests	8.1.4.1 and 8.1.4.2	-
	- Sensitivity of the tests	8.1.4.1 and 8.1.4.2	-
	- Criteria for acceptance	8.1.4.1 and 8.1.4.2	-
	- Actions when criteria are not met	-	Criteria must be met
8.1.5	**Component and Material Tests**	8.1.5	-
	- Description of tests for components such as gaskets	8.1.5	-
	- Sensitivity of the tests	-	Not Applicable
	- Acceptance Criteria	-	Not Applicable
	- Actions when criteria are not met	-	Not Applicable
	- Description of tests and acceptance criteria for packaging materials such as neutron absorber and insulating materials	8.1.5.1, 8.1.5.2, 8.1.5.3, 8.1.5.4	-
8.1.6	**Shielding Tests**	8.1.6	-
	- Tests for neutron and gamma radiation	8.1.6	-
	- Acceptance criteria	-	Not Applicable
8.17	**Thermal Tests**	8.1.7	-
	- Specification of tests	-	Not Applicable
8.18	**Miscellaneous Tests**	8.1.8	-
	- Description of additional tests	-	Not Applicable

Chapter 8			
RG. 7.9 Section	**Description**	**SAR Section**	**Remarks**
8.2	**Maintenance Program**	8.2	-
	- Description of maintenance program	8.2	-
8.2.1	**Structural and Pressure Tests**	8.2.1	-
	- Description of any periodic structural / pressure tests	8.2.1	-
8.2.2	**Leakage Tests**	8.2.2	-
	- Description of tests including frequency and sensitivity of the tests	8.2.2	-
	- Address elastomeric / metallic seals	8.2.3.6	-
8.2.3	**Component and Material Tests**	8.2.3	-
	- Description of periodic tests and replacement schedules for components	8.2.3 and Table 8.2.1	-
	- Address any deterioration of package components	8.2.3 and Table 8.2.1	-
	- Replacement intervals of components, such as bolts, that are susceptible to fatigue	8.2.3 and Table 8.2.1	-
8.2.4	**Thermal Tests**	8.2.4	-
	- Description of periodic tests	8.2.4	-
	- Description of periodic thermal tests	8.2.4	-
8.2.5	**Miscellaneous Tests**	8.2.5	-
	- Any additional tests performed periodically	8.2.5	-
8.3	**Appendix**	-	Not Applicable
	- References	8.3	-
	- Pages from references	-	-
	- Test data and reports	-	-
	- Supplemental information	-	-

HOLTEC INTERNATIONAL COPYRIGHTED MATERIAL

APPENDIX 1.B:

THIS APPENDIX IS PROPRIETARY IN ITS ENTIRETY

HOLTEC INTERNATIONAL COPYRIGHTED MATERIAL

CHAPTER 2: STRUCTURAL EVALUATION

2.0 INTRODUCTION

This chapter presents a synopsis of the Design Criteria relevant to the mechanical and structural characteristics of the HI-STAR 180 Package that ensure compliance with the performance requirements of 10CFR71, and it summarizes all structural evaluations and analyses of the package, pursuant to the provisions of 10CFR§71.61, 10CFR§71.71, and 10CFR§71.73.

In particular, the objectives of this chapter are twofold:

a. To demonstrate that the structural performance of the HI-STAR 180 Package has been adequately evaluated for the normal conditions of transport and for the hypothetical accident conditions set forth in 10CFR§71.61, 10CFR§71.71, and 10CFR§71.73.

b. To demonstrate that the HI-STAR 180 Package design has adequate structural integrity to meet the regulatory requirements of 10CFR§71.61, 10CFR§71.71, and 10CFR§71.73.

Among the topical areas addressed in this chapter are:

i. Structural characterization of the cask and its appurtenances.
ii. Identification of the materials used in the package and their *critical characteristics*.
iii. Identification of the loads applied on the package during handling, normal conditions of transport and accident conditions. Definition of miscellaneous bounding conditions for design such as a fire and immersion in water.
iv. Derivation of acceptance criteria for the package's performance under the aforementioned various conditions of service from the ASME B&PV Codes and other reference standards.
v. Analyses of the package using appropriate methodologies to establish the margins of safety under each condition of service. In addition to the typical evaluations for normal and accident conditions, these analyses include:
   - Evaluation of the physical integrity of the spent fuel under the postulated impactive loading events.
   - A demonstration of the adequacy of the minimum acceptable Charpy impact values specified for the parts subject to potential impact loadings. This is based on a methodology that determines the fracture strength of a material using the Charpy impact strength data.

Appendix 2.A provides introductory information on the principal codes used in the structural analysis (ANSYS and LS-DYNA). Appendix 2.B provides a comprehensive summary of the three-stage benchmarking effort by Holtec International to establish the veracity of the LS-DYNA solution for predicting the peak deceleration of the package and crush performance of the AL-STAR impact limiters. A discussion of the finite element discretization level to ensure that the solutions are fully converged is also provided.

To facilitate regulatory review, throughout this chapter, the assumptions and conservatism inherent in the analyses are identified along with a complete description of the analytical methods, models, and acceptance criteria. A summary of other considerations germane to satisfactory structural performance, such as protection against corrosion, creep (in the Metamic-HT fuel basket), and brittle fracture, is also provided. Finally, the methodology to determine the fracture strength of a material using the Charpy impact strength data, used by Holtec International to set down the required Charpy strength in load bearing members in lifting and handling equipment, is presented. This methodology is used to demonstrate the adequacy of the minimum acceptable Charpy impact values specified for the parts of the HI-STAR 180 Package that are potentially subject to a direct impact impulse.

HOLTEC INTERNATIONAL COPYRIGHTED MATERIAL

2.1 STRUCTURAL DESIGN

2.1.1 Discussion

This subsection presents the essential characteristics of the principal structural members and systems that are important to the safe operation of the HI-STAR 180 Package. These members are the containment system components (together with those parts that render the radiation shielding function in the cask), the structural components that constitute the fuel basket and the surrounding support, and the impact limiters needed to protect the package in the event of a hypothetical accident event (§71.73)

2.1.1.1 Cask

The structural functions of the cask in the transport mode are:

- To provide a high integrity fuel basket
- To serve as a penetration and puncture barrier for the fuel basket.
- To provide a high-integrity containment system.
- To provide a structurally robust support for the radiation shielding components.

The HI-STAR 180 cask consists of three discrete regions; namely:

1. the containment space
2. the inter-lid space
3. the supplemental shielding

The containment space (or space within the containment boundary as identified in the drawing package in Section 1.3 and described in Paragraph 1.2.1.3 and Section 4.1) is the heart of the package. It must ensure a leak-tight enclosure for its contents under all normal and accident conditions of transport. Accordingly, it is designed to meet the most rigorous industry requirements, to the extent germane to its function, of Section III, Subsection NB of the ASME Boiler & Pressure Vessel Code [2.1.1].

[PROPRIETARY TEXT REMOVED]

The supplemental shielding consists primarily of the monolithic shield cylinders (or shield cylinders). [PROPRIETARY TEXT REMOVED] To perform their function, they must not undergo body extensive damage resulting in an appreciable loss of shielding capacity under normal and accident conditions of transport.

[PROPRIETARY TEXT REMOVED]

2.1.1.2 Fuel Basket and Fuel Basket Support

The structural function of the fuel basket and fuel basket support (basket shims) (see drawing packages in Section 1.3) in the transport mode is to maintain the position of the fuel in a sub-critical configuration. In its role as the guarantor of subcriticality, the fuel basket must exhibit global physical integrity (i.e., no potential for large plastic deformation or structural failure in the active fuel region) under the most structurally demanding conditions of transport (see 2.1.2.2 (ii) for acceptance criterion).

2.1.1.3 Impact Limiters

The impact limiters used in the HI-STAR family of transport casks utilize shaped blocks of a crushable material arrayed around an extremely stiff cylindrical core in such a manner that the cask is protected from excessive inertia forces under a (hypothetical) uncontrolled drop event *regardless* of the orientation of drop. [PROPRIETARY TEXT REMOVED] The impact limiter configured on the above design platform is referred to as "AL-STAR" and is used in all models of HI-STAR transport packages, including the first package (HI-STAR 100), and subsequent packages labeled HI-STAR HB, HI-STAR 60, and this package (HI-STAR 180).

The structural function of the AL-STAR impact limiters (shown in the drawings in Section 1.3) in the transport mode is to cushion the HI-STAR 180 cask and the contained fuel during normal transport package handling, and during a hypothetical drop accident. The AL-STAR impact limiters and other appurtenances such as the support saddles and the personnel barrier necessary for the transport package must also meet all applicable regulatory requirements.

In what follows, explicit design criteria for the components of the transport package and essential appurtenances are presented.

2.1.2 Design Criteria

Regulatory Guide 7.6 [2.1.2] provides guidance for design criteria for the structural analysis of shipping cask containment vessels. Loading conditions and load combinations for transport are defined in 10CFR71 [2.1.3] and in Regulatory Guide 7.8 [2.1.4]. Consistent with the provisions of these documents, the central objective of the structural requirements presented in this section is to ensure that the HI-STAR 180 Package possesses sufficient structural capability to meet the demands of both normal (§71.71) and hypothetical accident conditions (§71.73) of transport articulated in the regulatory guidance documents, specifically Reg. Guide 7.6. The following table provides a synoptic matrix to demonstrate the explicit compliance with the seven regulatory positions with respect to the Containment Boundary stated in Regulatory Guide 7.6.

USNRC's Regulatory Position regarding the Containment Boundary for the Transport Package
1. Material properties, design stress intensities, and fatigue curves are obtained from the ASME Code.
2. Under normal conditions of transport, the limits on stress intensity are those limits defined by the ASME Code for primary membrane and for primary membrane plus bending for Level A conditions.
3. Perform fatigue analysis for normal conditions of transport using ASME Code Section III methodology (NB) and appropriate fatigue curves.
4. The stress intensity S_n associated with the range of primary plus secondary stresses under normal

USNRC's Regulatory Position regarding the Containment Boundary for the Transport Package
conditions should be less than $3S_m$ where S_m is the primary membrane stress intensity from the ASME Code.
5. Buckling of the containment vessel should not occur under normal or accident conditions.
6. Under accident conditions, the values of primary membrane stress intensity should not exceed the lesser of $2.4S_m$ and $0.7S_u$ (ultimate strength), and primary membrane plus bending stress intensity should not exceed the lesser of $3.6S_m$ and S_u.
7. The extreme total stress intensity range should be less than $2S_a$ at 10 cycles as given by the appropriate fatigue curves.

The following design requirements are applicable to the remainder of the transport package:

- The shield cylinders are required to remain in place and functional after all Normal and Hypothetical Accident Conditions of Transport.
- The fuel basket is required to maintain its shape so as to ensure reactivity control after all Normal and Hypothetical Accident Conditions of Transport.
- The fuel basket supports are required to maintain global positioning of the fuel basket after all Normal and Hypothetical Accident Conditions of Transport.
- The impact limiters are required to have an appropriate shape and energy absorption capacity to ensure that impacts, resulting from hypothetical accident events, do not cause any of the containment and shielding components to fail to meet their specified requirements.

2.1.2.1 Loading and Load Combinations

10CFR71 and Regulatory Guide 7.6 define two conditions that must be considered for qualification of a transport package. These are defined as "Normal Conditions of Transport" and "Hypothetical Accident Conditions".

The loadings applicable to the HI-STAR 180 package can be broadly divided into five categories, namely:

1. permanent loads
2. design condition loads
3. handling loads
4. normal condition of transport loads (§71.71)
5. hypothetical accident condition loads (§71.73)

1. Permanent Loads

Permanent loads in HI-STAR 180 arise from bolt pre-load to seat the gasketed joints. The pre-load applied to the cask lid bolts seats the [PROPRIETARY TEXT REMOVED] seals and creates a contact pressure on the inside metal-to-metal annulus, referred to as the "land", to protect the joint

from leakage under postulated impact loading events. Bolt pre-load produces a state of stress in the closure lids, the cask closure flange, and the cask inner shell region adjacent to the flange.

The stress field in the cask body and the lids from the bolt pre-load combines with the stresses produced under a specific event such as during the hypothetical accident condition (item #5 above). Thus, the bolt pre-load induced stress participates in every load combination analyzed for the cask.

The initial preload should be set to maintain a seal under the action of the internal pressure plus the effective pressure calculated as the cask content weight times the maximum rigid body deceleration from the free 9-meter end drop (see discussion below). This preload is much larger than the preload needed to balance the maximum normal operating internal pressure (MNOP specified in Table 2.1.1).

Stresses from weld shrinkage endemic to every welded component also lie in the category of permanent stresses. However, because they are of the secondary genre (i.e., they arise to satisfy compatibility, not equilibrium) they are not computed or included in the load combinations.

Finally, the interface load produced between the shield cylinder and containment shell due to the method of assembly, causes the shield cylinder to add structural support to the containment shell. The beneficial effect of the interface load between the shield cylinder and the containment shell is conservatively neglected in the structural analyses.

2. Design Condition Loads

The ASME Code [2.1.1] requires that a pressure vessel be qualified to a design internal and external (if applicable) pressure. The Design Pressure should be selected to bound all normal operating condition pressures. The applicable Design Temperature, likewise, should be one that bounds the metal temperature of the affected pressure parts under all normal service conditions. For the HI-STAR 180 Package, the Design Internal Pressure and Design Temperatures, set down in Table 2.1.1, accordingly bound all service condition values.

Stress analysis of the containment system under the Design Pressure is required to demonstrate compliance with the "NB" stress limits for the containment system material and to demonstrate the leak tightness of the bolted joints. The Design Temperature is utilized to establish the applicable allowable stress intensity, S_m, for the "pressure part" (a term used in the ASME B&PV Code). The following pressure loading scenarios are identified:

- Maximum Normal Operating Pressure (MNOP): The MNOP is defined in Table 2.1.1 for the containment system of the cask and bounds the calculated internal pressure values in Table 3.1.2. The coincident external pressure is assumed to be atmospheric.

- Design Internal Pressure: A design internal pressure is defined in Table 2.1.1 for the containment system of the cask as a pressure vessel. The coincident external pressure is assumed to be atmospheric.

- Accident Condition Internal Pressure: An accident condition internal pressure is defined in Table 2.1.1 for the containment cavity of the cask pressure vessel. The coincident external pressure is assumed to be atmospheric.

- Accident Condition External Pressure: An accident condition external pressure with cavity depressurized is defined in Table 2.1.1. This loading, in conjunction with the buckling analysis of the cask containment shell, is intended to demonstrate that the containment system is in compliance with the requirements of 10CFR71.61. This loading bounds the external pressure specified by 10CFR71.73(c) (5) and (6); therefore, it is considered in Section 2.7.

Table 2.1.1 provides the above values of design basis internal and external pressures. Because the HI-STAR 180 cask operates under a sub-atmospheric pressure under normal condition of transport, the Design Internal Pressure could be set at zero psig, but is conservatively set higher in Table 2.1.1 to cover all essential operations described in Chapter 7 of this SAR.

The most adverse possible internal pressure state occurs under the simultaneous effect of fire and 100% rod rupture. This pressure (provided in Table 3.1.4) is bounded by the accident condition internal pressure specified in Table 2.1.1.

The case of deep submergence (§71.61) is enveloped by the accident condition external pressure of specified in Table 2.1.1.

[PROPRIETARY TEXT REMOVED]

3. Handling Loads

The lifting devices in the HI-STAR 180 cask are subject to the specific stress limits set forth by NUREG-0612 [2.1.5], which require that the primary stresses in a lifting point must be less than the smaller of 1/10 of the material ultimate strength and 1/6 of the material yield strength while subject to the lifted load that includes an appropriate dynamic load amplifier. These limits apply to the cask lifting trunnions and to the threaded holes in the lids. An associated requirement is an evaluation of the stress intensity state in the cask baseplate when the package is being lifted. Baseplate loads considered are the self-weight of the baseplate plus attached shielding, the fuel, the fuel basket, and the fuel basket supports. A 15% load amplifier is applied (as discussed in Subsection 2.5.1) and Level A stress intensity limits of the ASME Code, Section III, Subsection NB are used to evaluate acceptance.

Section 2.5 documents the lifting analyses applicable to the HI-STAR 180 package.

4. Normal Conditions of Transport Loads (§71.71)

The normal conditions of transport loads that warrant structural evaluation are:

a. Reduced external pressure 25 kPa (3.5 psia).
b. Increased external pressure (140 kPa or 20 psi absolute).
c. Free drop from 0.3-meter (1-foot) height in the most vulnerable orientation onto an essentially unyielding horizontal surface (henceforth called the "1- foot drop event").
d. Normal vibratory loads incidental to transport.
e. Normal operating conditions (pressure and temperature).

External pressure loads ((a) and (b) above) are clearly enveloped by the design external pressure set by a deep submersion of the package (10CFR71.61). This condition is evaluated in Section 2.7. The normal operating conditions (e) are evaluated to demonstrate that the containment meets requirements of the ASME Code to be designated as a "pressure vessel". The "1-foot drop event" (c) evaluation in this section is the "Side Drop". The HI-STAR 180 Package is assumed to drop with its axis parallel with respect to the horizontal surface, such that the collision of the two impact limiters with the target is coincident in time. Vibratory loads transmitted to the HI-STAR 180 Package (d) by the transport vehicle will produce negligibly small stresses in comparison with stresses that will be produced by the loadings described previously. Therefore, vibratory loading is neglected in the analyses performed herein.

Based on the above considerations, the governing Load Combinations to be considered in Section 2.6, for both Heat and Cold conditions, are:

- Load Combination N1:
  Bolt pre-load plus Design Internal pressure and normal operating temperature plus loading from FIAs (subject to Level A condition stress limits)
- Load Combination N2:
  Free drop from 1 foot plus bolt pre-load

5. Hypothetical Accident Condition Loads (§71.73)

These loads pertain to hypothetical accident conditions. Specifically, they are:

a. Free Drop of 9 m (30 ft) (§71.73 (c) (1))
b. Puncture (§71.73 (c)(3))
c. Engulfing fire @ 800°C (1475°F) (§71.73 (c)(4))
d. Immersion in 15 m (50 ft) head of water (§71.73 (c) (6)).

a. Free Drop

The free drop event can be broken down into seven candidate scenarios with potential to cause maximum damage:

- Bottom End Drop: The packaging is assumed to drop vertically with its cask containment baseplate sustaining the impulsive load transmitted by the contents. The weight of the

package is included in all drop load cases.

- Top End Drop: This drop condition is the opposite of the preceding case. The outer closure lid withstands the impact load transmitted through the impact limiter, and the inner closure lid withstands the impact from the contained fuel, fuel basket, and fuel basket supports (basket shims).

- Side Drop: The cask along with its contents drops with its longitudinal axis horizontal. The contents of the cask bear down on the cask as it decelerates under the resistance offered by the two impact limiters pressing against an essentially unyielding surface.

- Bottom Center-of-Gravity Over-the-Corner Drop: In this drop scenario, the HI-STAR 180 Package is assumed to impact an essentially unyielding surface with its center-of-gravity directly above its initial point of contact in the drop event.

- Top Center-of-Gravity Over-the-Corner Drop: This loading case is identical to the preceding case, except that the package is assumed to be dropping with its top end down and its center-of-gravity is aligned over the initial point of contact.

- Slapdown – Initial Impact at Top End: In this case, the package drops with its axis at a small angle with the horizontal with the top end impacting first. Subsequent to the primary impact, the package begins to rotate with the bottom end impacting the target at a later time (secondary impact). Higher decelerations are experienced during the secondary impact. The governing slapdown angle, θ, is determined by a parametric analysis.

- Slapdown – Initial Impact at Bottom End: This case is the same as above, except for the location of primary and secondary impacts.

b. <u>Puncture</u>

The puncture event is broken down into two limiting scenarios, namely:

- Side Puncture Force Event: This event consists of a 1-m (40-in) free drop (impact limiters are ignored) onto a stationary and vertical mild steel bar of 15 cm (6 in) diameter with its leading edge (top edge) rounded to 6 mm (1/4-in) radius. The bar is assumed to be of such a length as to cause maximum damage to the cask. The package is assumed to be dropping horizontally with the penetrant force being applied at the mid-length of the cask.

- Top End Puncture Force: This event is similar to the preceding case except the penetrant force is assumed to act at the center of the outer closure lid. Because of the proximity of the bolted joints, this case is considered limiting for an end puncture.

The above loading events may occur under the so-called "hot" (maximum ambient temperature) or "cold" condition at -29°C (-20°F). In the latter thermal state, the effects of brittle fracture must also

be evaluated.

Because the HI-STAR 180 Package operates at a relatively low internal pressure or even sub-atmospheric conditions, the impact and puncture loadings under service conditions are orders of magnitude greater than pressure loadings. Therefore, the pressure loads are neglected in the drop and puncture analyses.

c. Fire

Fire is not a mechanical loading event; its chief consequence is to challenge the integrity of the neutron shielding material. The results are presented in Chapter 3. The results show that the gas pressure inside the containment system remains below the accident pressure limit for the package (see Table 2.1.1). Based on the temperature changes established in Chapter 3, an evaluation is performed to demonstrate that the land compression load at the lid/flange joint does not degrade to an unacceptable value.

d. Immersion

Finally, from the structural standpoint, the 15-m (50-ft) immersion case is clearly bounded by the accident external pressure loading of 2 MPa (290 psi) deemed to satisfy the requirements of 10CFR71.61. The ability of the package to maintain moderator exclusion pursuant to §71.61 is discussed in Appendix 1.B and in Section 2.7.

Based on the above considerations, the Load Combinations that are considered in Section 2.7, for both Heat and Cold conditions, are:

Hypothetical Accident Load Cases*
9-m free drops
End and Side Puncture
Deep Submergence 2 MPa (290 psi)
Gasket Relaxation from Fire

* Permanent Loads are in-place at the start of every load case.

2.1.2.2 Acceptance Criteria

The constituent parts of the package, namely, (i) the containment system components, (ii) the fuel basket, (iii) the dose blocker parts, and (iv) the impact limiters must meet acceptance criteria specific to their function under each loading condition, as described below:

(i) Containment System

a. Design Pressure: The containment baseplate, containment closure flange, inner and outer closure lids, and the containment shell should meet stress intensity limits of Subsection NB (Table 2.1.2)

under the Design Pressure and Design Temperature conditions.

b. Free Drop: Under the normal handling event (0.3 m drop (§71.71) with impact limiters installed) and the hypothetical accident (9-meter drop (§71.73) with impact limiters installed), the containment system (including the inner and outer closure lids) should be shown to remain leaktight. In quantitative terms, leaktightness is guaranteed if the primary axial stress in the body bolts remains in the elastic range and the gaskets remain compressed after the event. An additional quantitative measure of margin-against unacceptable leakage from or into the containment space is presented in Subparagraph 2.6.1.3.4. As suggested in Reg. Guide 7.6, the components of the containment system should also meet the ASME Code, Section III, Level A and Level D stress intensity limits, respectively, under the free drop events.

c. Under the puncture event, the containment system must be demonstrated to remain unbreached, leaktightness must be maintained, and applicable Level D primary stress intensity limits should be met away from the location of the impact. (High stresses that inevitably develop in the region of impact are termed "local" stresses that belong to the secondary or peak stress categories in the ASME Code (Figure NB-3222-1)).

d. The closure lid seals must remain functional under all events to ensure "leak tightness" of the containment system. Specifically, at the end of the event, the seal surface must maintain a compressive stress above the seal manufacturer's recommended value. The specific bolted joint detail utilized for the inner closure lid is of the so-called "controlled compression" type, which is defined by three distinct characteristics:

i. The seal sits in a precisely machined groove such that the extent of compression of the seal is precisely controlled.

ii. The bolt force, in excess of the load required to "seat" the seal, is counteracted by the contact force over the surface, where the flange and the closure lid make conformal contact. The contact force on this surface, referred to as the "land" in the pressure vessel literature, must be overcome by any force trying to open the joint (such as internal pressure) before the seal can be made to relax.

iii. The joint is immune to over-compression and crushing of the seal by external pressure or any other type of force trying to compress the seal (a desirable feature in the deep submergence case).

Although meeting the above seal pressure limit would suffice, as discussed in Subparagraph 2.6.1.3.4, a much more stringent criterion for ascertaining loss of margin against joint sealworthiness, termed "margin-against-leakage", m, is utilized in this SAR.

e. Applicable allowable stress intensity limits for the containment system, including closure bolts, are obtained from the ASME Code, Section III, Division 1, Subsection NB [2.1.1], and are given in Tables 2.1.2 and 2.1.3.

Allowable stresses and stress intensities are calculated using the data provided in the ASME Code, Section II, Part D [2.1.6] and Tables 2.1.2 and 2.1.3. Tables 2.1.4 through 2.1.8 provide numerical values of the stress intensities, as a function of temperature, for the cask containment system materials, including lid closure bolts.

Throughout this chapter, the term "S_m" and "S_u" denote the design stress intensity and ultimate strength, respectively. Property values at intermediate temperatures that are not reported in the tables are obtained by linear interpolation as allowed by paragraph NB-3229 of the ASME Code.

Terms relevant to the analyses are extracted from the ASME Code (Figure NB-3222-1) as follows.

Symbol	Description	Notes
P_m	Average primary stress across a solid section.	Excludes effects of discontinuities and concentrations. Produced by pressure and mechanical loads.
P_L	Average stress across any solid section.	Considers effects of discontinuities but not concentrations. Produced by pressure and mechanical loads, including inertia earthquake effects.
P_b	Primary bending stress.	Component of primary stress proportional to the distance from the centroid of a solid section. Excludes the effects of discontinuities and concentrations. Produced by pressure and mechanical loads, including inertia earthquake effects.
P_e	Secondary expansion stress.	Stresses, which result from the constraint of free-end displacement. Considers effects of discontinuities but not local stress concentration. (Not applicable to casks.)
Q	Secondary membrane plus bending stress.	Self-equilibrating stress necessary to satisfy continuity of structure. Occurs at structural discontinuities. Can be caused by pressure, mechanical loads, or differential thermal expansion.

Summarizing the previous discussions, in accordance with Regulatory Guide 7.6 and ASME Code Section III, Subsection NB, the allowable stress limits for the cask containment system are based on design stress intensities (S_m), yield strengths (S_y), and ultimate strengths (S_u). These limits govern the design of the cask inner shell, the closure flange, the containment baseplate, and the two closure lids and are given in Tables 2.1.4 through 2.1.8 for normal and hypothetical conditions of transport as a function of temperature. Table 2.1.9 summarizes the specific limits for the hot and cold design temperatures. As the ASME Code sections governing the containment system are stress based, there is no explicit maximum strain limit set down in this SAR for the containment system.

Certain parts of the HI-STAR 180 containment system are composed of ferritic steel materials, which may be subject to impact loading in a cold environment and, therefore, must be evaluated and/or subjected to impact testing in accordance with the ASME Code to ensure protection against

brittle fracture.

Table 2.1.10 provides the fracture toughness test criteria for the HI-STAR 180 containment system components in accordance with the applicable ASME Codes and Regulatory Guide requirements for prevention of brittle fracture. Regulatory Guides 7.11 [2.1.7] and 7.12 [2.1.8] are used to determine fracture toughness requirements for the containment system components, as discussed below.

All containment system materials subject to impact loading in a cold environment must be evaluated and/or tested for their potential for brittle fracture. SA350-LF3 and SA203-E have been selected as acceptable materials for these components based on the material's capability to perform at low temperatures with excellent ductility properties. These materials of construction are identical to the materials approved for use in the HI-STAR 100. The lowest service temperature (where impactive or impulsive loads are present) is -29°C (-20°F) (per Reg. Guide 7.8 [2.1.4]).The appropriate Regulatory Guides are used to provide guidance on the test temperature to demonstrate appropriate resistance to brittle fracture. For the cask baseplate, closure flange, and the inner closure lid that have thicknesses greater than four-inches, Table 1 of Regulatory Guide 7.12 provides guidance on the required Nil Ductility Transition (NDT) temperature, "T_{NDT}". The outer closure lid thickness is below 4-inches; therefore Regulatory Guide 7.11 is used to provide the required NDT.

SA193-B7 and SA564-630 (H1025) are the designated bolt materials for the outer and inner lid joints, respectively (Table 2.2.2). Section 5 of NUREG/CR-1815 [2.1.9] indicates that bolts are generally not considered susceptible to brittle fracture. However, for additional assurance, the following additional requirements are imposed in the procurement of the bolting material:

a. Minimum Charpy V-notch values at -29°C (-20°F) as specified in Table 2.1.10.

b. A volumetric examination of each bolt to ensure absence of voids.

Additionally, crack propagation analyses of the inner and outer closure lid bolts are performed to establish that an adversely oriented surface V-notch in the bolts will not grow under the most limiting impactive scenario. Section 2.7.1.4 contains a description of the methodology.

(ii) Fuel Basket

The *critical characteristics* of the Metamic-HT material discussed in Section 1.2 are central to the fuel basket to render its intended function. The essential predicates for ensuring that the fuel basket will meet or exceed its performance requirements are:

i. Lateral deflection of the basket panels must be within prescribed limits.
ii. Protection against crack propagation under all operating conditions including the hypothetical free drop event under the "cold" ambient condition (-29°C (-20°F)).
iii. Protection against local tearing of basket panel during an accident event.
iv. B-10 areal density in the basket panel required to meet the subcriticality requirement in this SAR is assured.

v. Mechanical strength and physical properties under normal conditions of transport (characterized by the dead load of fuel on the basket panels and heated thermal state) are preserved.

vi. Physical properties of the basket structural material under the neutron and gamma fluence from the contained SNF are preserved.

Each performance requirement is discussed below:

i. Lateral deflection of the fuel basket panels within prescribed limits:

Lateral deflection of the basket panels can occur from two mechanisms:

a. Creep, which is a long-term effect
b. Instantaneous deflection under mechanical loading

a. Creep

The lateral deflection of the Metamic-HT panels from the sustained weight of the SNF during transport must be negligible. A proposed criterion in Japan [1.2.22] is to limit the cumulative creep to 0.4% in sixty years. [PROPRIETARY TEXT REMOVED]

b. Instantaneous Deflection Under Mechanical Loadings

In order to render its intended function, namely, to maintain reactivity control, the fuel basket plates must not experience any damage that would invalidate the analysis basis configuration assumed in the criticality analysis. The acceptable limit on panel deformation is accordingly set down to maintain a reactivity control with appropriate margin to the limits.

[PROPRIETARY TEXT REMOVED]

ii. Protection Against Crack Propagation

The material property used to determine whether a flaw in the basket panel would propagate under the most adverse dynamic stress scenario is the Charpy impact strength, C_r. Aluminum is among the small group of metals that maintains its impact strength under extreme cold conditions. [PROPRIETARY TEXT REMOVED]

iii. Protection Against Local Tearing of the Basket Panel

The "elongation" of the panel material (the cumulative strain at failure) specified in Table 1.2.12 is used in the structural analysis of the fuel basket using the LS-DYNA code. The acceptance criterion is a *complete absence of local or global tear*. [PROPRIETARY TEXT REMOVED]

iv. Assured B-10 Loading

The B_4C concentration (specified to be between 9% and 11% by weight) and the spatially homogeneous distribution of B_4C particles is an essential basis for criticality safety analyses.

[PROPRIETARY TEXT REMOVED]

The gross weight compliance requirement (between 9% to 11% B_4C) is also verified by samples of Al-B_4C mixture analyzed by the "wet chemistry" method (see Chapter 8) [1.2.26].

v. Preservation of Mechanical Strength and Physical Properties Under Operating Conditions

The table below provides the maximum temperature attained by the Metamic-HT panels during transport conditions. [PROPRIETARY TEXT REMOVED] Therefore, the Metamic-HT panels in the HI-STAR 180 cask are not expected to undergo a change in their strength properties under the thermal conditions that will prevail in the cask's containment space.

vi. Preservation of Physical Properties Under the Neutron and Gamma Fluence

The tests on unirradiated and radiated coupons, documented in [2.1.13], show that neutron fluence on the coupons exceed the value that will be sustained by the Metamic-HT panels in 56 years of SNF confinement. At these irradiation levels, the Metamic-HT strength is unaffected and its creep behavior is bounded by the Metamic-HT creep equation (See Table 1.2.12).

Therefore, as expected of aluminum-based materials, the radiation dose from the transported SNF will not degrade the strength and ductility properties of the Metamic-HT panels.

(iii) Dose Blocker Parts

The monolithic shield cylinders (that girdle the containment shell), the bottom ring forging, the bottom steel cover plate, and the Holtite neutron shield materials in the confined cavities, are examples of dose blocker parts in the HI-STAR 180 package. These parts are generally located at the exterior boundary of the cask, and hence are subject to a direct action of the impactive/impulsive service condition and/or handling mishap loads. To meet the performance mission of the package, the dose blocker parts should not permanently separate from the cask or suffer a body extensive damage. Furthermore, under cold conditions, the potential for brittle fracture leading to a separation and/or loss of function must also be addressed.

[PROPRIETARY TEXT REMOVED]

(iv) Impact Limiters

Impact limiters are designed to absorb the impact energy during a drop event by plastic deformation. The crush strength and size of the impact limiters are sufficient to prevent bottoming out. The impact limiter must perform its energy absorption function over the range of environmental temperatures.

Under all postulated impact events applicable to the HI-STAR 180 Package, the impact limiter must stay attached to the package and mitigate the inertia forces such that:

i. The stress levels in the containment system do not exceed the Section III Subsection NB allowables for the applicable service condition.
ii. The deformation levels in the basket meet the limits set forth in the foregoing.
iii. The gasketed joints in the containment system remain fully functional to prevent leakage.
iv. The decelerations in the cask under the 9-meter drop are limited to ensure that the contained spent nuclear fuel cladding will not breach from excessive flexural strain.
v. The deformation of the crush material is limited to prevent contact between the cask and the target ("bottoming out of the package").
vi. The impact limiter(s) remain physically attached to the cask. In quantitative terms, this means that the impact limiter's skirt (which girdles the cask at both ends) does not come off the cask and the attachment fasteners do not undergo excessive strains.

2.1.3 Weights and Centers of Gravity

Table 2.1.11 provides the weights of the individual HI-STAR 180 components as well as the total Transport Package weights, and the weight of the heaviest loaded HI-STAR 180 Cask.

Table 2.1.12 provides the location of the calculated center of gravity (CG) for the package. The CG is assumed to be located on the cask centerline since the non-axisymmetric effects of the cask plus contents are negligible.

2.1.4 Identification of Codes and Standards for Package Design

The design of the HI-STAR 180 Package does not invoke ASME Code Section III in its entirety. Specific Code paragraphs in NB-3000 of Section III, Subsection NB of the ASME Boiler and Pressure Vessel Code (ASME Code) [2.1.1], and Appendix F [2.1.10] that are cited herein are invoked for design of the containment system of the HI-STAR 180 Package.

Table 2.1.13 lists each major structure, system, and component (SSC) of the HI-STAR 180 Packaging, along with its function, and applicable code or standard. The Bill of Materials for each drawing set in Section 1.3 identifies whether items are "Important to Safety" (ITS) or "Not Important to Safety" (NITS); the identification is carried out using the guidance of NUREG/CR-6407, "Classification of Transportation Packaging and Dry Spent Fuel Storage System Components". Table 2.1.14 lists some alternatives to the ASME Code where appropriate. Table 2.1.15 provides applicable sections of the ASME Code and other documents for Material Procurement, Design, Fabrication, and Inspection, and Testing pursuant to the guidance in NUREG

HOLTEC INTERNATIONAL COPYRIGHTED MATERIAL

1617 [2.1.11].

All materials and sub-components that do not constitute the containment system in the HI-STAR 180 cask are procured to ASTM Specifications, except for the fuel basket (made of Metamic-HT) and the neutron absorber (a Holtec custom-engineered product made from boron carbide uniformly dispersed into a hydrogen rich material, which are specialty materials, not sufficiently used to merit an ASTM Standard. These special purpose materials have been tested and characterized under Holtec's QA Program).

The *critical characteristics* of all materials set down in this SAR establish the minimum requirements that must be met by the material. The applicable *critical characteristics* for each part in the HI-STAR 180 cask are listed in Table 2.1.16 with the required limiting values, as applicable.

HOLTEC INTERNATIONAL COPYRIGHTED MATERIAL

Table 2.1.1: Pressures and Temperatures for Normal and Accident Conditions

		Gauge Pressure kPa (psig)	Temperature
1.	Maximum Normal Operating Pressure (MNOP) (bounds MNOP values in Table 3.1.2)	[PROPRIETARY TEXT REMOVED]	Table 3.2.10
2.	Design Internal Pressure (covers MNOP above and all essential operations described in Chapter 7 of this SAR)	[PROPRIETARY TEXT REMOVED]	
3.	Accident Condition Internal Pressure (bounds value in Table 3.1.4 for fire and rod rupture)	[PROPRIETARY TEXT REMOVED]	
4.	Accident Condition External Pressure (deep submergence)	2000 (290)*	

* Set to meet 10CFR71.61

Table 2.1.2: Stress Intensity Limits for Different Service Conditions for Section III Class 1 Pressure Vessels (Elastic Analysis Per NB-3220)

Stress Category	Level A	Level D
Primary Membrane, P_m	S_m	Lesser of $2.4S_m$ and $0.7S_u$
Local Membrane, P_L	$1.5S_m$	150% of P_m Limit
Membrane plus Primary Bending	$1.5S_m$	150% of P_m Limit
Primary Membrane plus Primary Bending	$1.5S_m$	150% of P_m Limit
Membrane plus Primary Bending plus Secondary	$3S_m$	N/A
Average[†] Primary Shear (Section in pure shear)	$0.6S_m$	$0.42S_u$

Notes:

1. Fatigue analysis (as applicable) also includes peak stress (denoted by "F" in the nomenclature of the ASME Code [2.1.1]).

[†] Governed by NB-3227.2 or F-1331.1(d) of the ASME Code, Section III (NB or Appendix F)

HOLTEC INTERNATIONAL COPYRIGHTED MATERIAL

Table 2.1.3: Stress Limits for Lid Closure Bolts (Elastic Analysis Per NB-3230)

Stress Category	Level A	Level D
Average Service Stress	$2S_m$	Cannot exceed Yield Strength
Maximum Service Stress (tension + bending but no stress concentrations)	$3S_m$	Joint Remains Leak Tight (see Note 2). Cannot exceed Ultimate Strength

Notes:

1. Stress limits for Level A loading ensure that bolt remains elastic.
2. Limit set on primary tension plus primary bending for Level D loading is based on an elastic stress evaluation; however, the overriding acceptability of the joint design is performance based on an assured absence of leakage.

Table 2.1.4: Design, Levels A and B: Stress Intensity – SA-203 E

Code: ASME NB
Material: SA-203 E
Item: Stress Intensity

Temperature °C (°F)	Classification and Value, MPa (ksi)					
	S_m	P_m (Note 1)	P_L (Note 1)	$P_L + P_b$ (Note 1)	$P_L + P_b + Q$	P_e (Note 2)
-29 to 38 (-20 to 100)	160.6 (23.3)	160.6 (23.3)	241.3 (35.0)	241.3 (35.0)	481.9 (69.9)	481.9 (69.9)
93,3 (200)	160.6 (23.3)	160.6 (23.3)	241.3 (35.0)	241.3 (35.0)	481.9 (69.9)	481.9 (69.9)
149 (300)	160.6 (23.3)	160.6 (23.3)	241.3 (35.0)	241.3 (35.0)	481.9 (69.9)	481.9 (69.9)
204 (400)	157.9 (22.9)	157.9 (22.9)	237.2 (34.4)	237.2 (34.4)	473.7 (68.7)	473.7 (68.7)
260 (500)	148.9 (21.6)	148.9 (21.6)	223.4 (32.4)	223.4 (32.4)	446.8 (64.8)	446.8 (64.8)

Definitions:

S_m	=	Stress intensity values per ASME Code
P_m	=	Primary membrane stress intensity
P_L	=	Local membrane stress intensity
P_b	=	Primary bending stress intensity
P_e	=	Expansion stress
Q	=	Secondary stress
$P_L + P_b$	=	Either primary or local membrane plus primary bending

Notes:

1. Evaluation required for Design condition only per NB-3220.
2. P_e not applicable to vessels per Fig. NB-3221-1.
3. Values are in accordance with stress intensity limits provided in Table 2.1.2.

Table 2.1.5: Level D Stress Intensity – SA-203 E

Code: ASME NB
Material: SA-203 E
Item: Stress Intensity

Temperature °C (°F)	Classification and Value, MPa (ksi)		
	P_m	P_L	$P_L + P_b$
-29 to 38 (-20 to 100)	337.8 (49.0)	506.8 (73.5)	506.8 (73.5)
93.3 (200)	337.8 (49.0)	506.8 (73.5)	506.8 (73.5)
149 (300)	337.8 (49.0)	506.8 (73.5)	506.8 (73.5)
204 (400)	337.8 (49.0)	506.8 (73.5)	506.8 (73.5)
260 (500)	337.8 (49.0)	506.8 (73.5)	506.8 (73.5)

Notes:

1. Level D allowables per NB-3225 and Appendix F, Paragraph F-1331.
2. Average primary shear stress across a section loaded in pure shear may not exceed 0.42 S_u.
3. Values are in accordance with stress intensity limits provided in Table 2.1.2.
4. See Table 2.1.4 for stress classification definitions.

Table 2.1.6: Design, Levels A and B: Stress Intensity – SA-350 LF3

Code: ASME NB
Material: SA-350 LF3
Item: Stress Intensity

Temperature °C (°F)	Classification and Value, MPa (ksi)					
	S_m	P_m (Note 3)	P_L (Note 3)	$P_L + P_b$ (Note 3)	$P_L + P_b + Q$	P_e (Note 4)
-29 to 38 (-20 to 100)	160.6 (23.3)	160.6 (23.3)	240.9 (35.0)	240.9 (35.0)	481.9 (69.9)	481.9 (69.9)
93.3 (200)	157.9 (22.9)	157.9 (22.9)	236.9 (34.4)	236.9 (34.4)	473.7 (68.7)	473.7 (68.7)
149 (300)	152.4 (22.1)	152.4 (22.1)	228.6 (33.2)	228.6 (33.2)	457.2 (66.3)	457.2 (66.3)
204 (400)	147.5 (21.4)	147.5 (21.4)	221.3 (32.1)	221.3 (32.1)	442.5 (64.2)	442.5 (64.2)
260 (500)	140.0 (20.3)	140.0 (20.3)	210.0 (30.5)	210.0 (30.5)	420.0 (60.9)	420.0 (60.9)
316 (600)	129.6 (18.8)	129.6 (18.8)	194.4 (28.2)	194.4 (28.2)	388.8 (56.4)	388.8 (56.4)
371 (700)	116.5 (16.9)	116.5 (16.9)	174.8 (25.4)	174.8 (25.4)	349.5 (50.7)	349.5 (50.7)

Notes:

1. Source for S_m is Table 2A of ASME Section II, Part D.
2. Values are in accordance with stress intensity limits provided in Table 2.1.2.
3. Evaluation required for Design condition only per NB-3220.
4. P_e not applicable to vessels per Fig. NB-3221-1.
5. See Table 2.1.4 for stress classification definitions.

Table 2.1.7: Level D, Stress Intensity – SA-350 LF3

Code: ASME NB
Material: SA-350 LF3
Item: Stress Intensity

Temperature °C (°F)	Classification and Value, MPa (ksi)		
	P_m	P_L	$P_L + P_b$
-29 to 38 (-20 to 100)	337.8 (49.0)	506.8 (73.5)	506.8 (73.5)
93.3 (200)	337.8 (49.0)	506.8 (73.5)	506.8 (73.5)
149 (300)	337.8 (49.0)	506.8 (73.5)	506.8 (73.5)
204 (400)	337.8 (49.0)	506.8 (73.5)	506.8 (73.5)
260 (500)	335.8 (48.7)	506.8 (73.5)	506.8 (73.5)
316 (600)	311.0 (45.1)	462.6 (67.7)	462.6 (67.7)
371 (700)	279.9 (40.6)	419.9 (60.9)	419.9 (60.9)

Notes:

1. Level D allowables per NB-3225 and Appendix F, Paragraph F-1331.
2. Average primary shear stress across a section loaded in pure shear may not exceed 0.42 S_u.
3. Values are in accordance with stress intensity limits provided in Table 2.1.2.
4. See Table 2.1.4 for stress classification definitions.

Table 2.1.8: Design Stress Intensity – Bolting Material

Code: ASME NB
Material: SA-193 B7 (Bolt < 2.5 inch diameter), SA-564 630 (H1025)
Item: Stress Intensity

Temperature °C (°F)	Design Stress Intensity SA-193 B7 MPa (ksi)	Design Stress Intensity SA-564 630 MPa (ksi)
-29 to 38 (-20 to 100)	241.3 (35)	333.0 (48.3)
93.3 (200)	224.8 (32.6)	333.0 (48.3)
149 (300)	216.5 (31.4)	333.0 (48.3)
204 (400)	210.3 (30.5)	324.1 (47.0)
260 (500)	203.4 (29.5)	317.8 (46.1)
316 (600)	195.8 (28.4)	313.0 (45.4)
343 (650)	-	309.6 (44.9)
371 (700)	185.5 (26.9)	-

Notes:

1. Level A and D limits per Table 2.1.3
2. Table 2.2.2 contains other mechanical and thermal properties of the bolting material.
3. Sources for design stress intensity values for SA-193 B7 and SA-564 630, respectively, are Tables 4 and 2A of ASME Section II, Part D.
4. Values for SA-564 630 are conservatively based on age hardening at 1075°F (H1075).

HOLTEC INTERNATIONAL COPYRIGHTED MATERIAL

Table 2.1.9

[Intentionally Deleted]

HOLTEC INTERNATIONAL COPYRIGHTED MATERIAL

Table 2.1.10: [PROPRIETARY TEXT REMOVED]

HOLTEC INTERNATIONAL COPYRIGHTED MATERIAL

Table 2.1.10: [PROPRIETARY TEXT REMOVED]

Table 2.1.10A: Fracture Toughness Test Criteria: Dose Blocker Steel Parts

Item	Material	Thickness mm(in.)	Charpy V-Notch Test Temperature†	Remarks
Monolithic Shield Cylinder	SA-352 LCC/ASTM A 352 93 LCC	141 nom. (5.5) 150 max. (5.9)	Test at -46°C (-50°F)	Charpy energy is 20 ft.-lb. (average of 3 specimens) and minimum of 15 ft.-lb. for any single specimen.
Bottom Ring Forging	SA-350 LF2	249 (9.8)	Test at -46°C (-50°F)	Charpy energy is 18 ft.-lb. (average of 3 specimens) and minimum of 13 ft.-lb. for any single specimen.
Bottom Cover Plate	SA-36/SA-516 Gr. 70	50 (2)	$T_{NDT} \leq$ -46°C (-50°F)	Charpy energy is 15 ft.-lb. (average of 3 specimens) and minimum of 10 ft.-lb. for any single specimen.

Notes:

1. Material to be tested in accordance with NF-2320 [2.1.14].
2. Test specimens will be in accordance with SA-370 [2.1.6, Part A, Fig. 11]

† Temperature is T_{NDT} unless noted.

HOLTEC INTERNATIONAL COPYRIGHTED MATERIAL

Table 2.1.11: [PROPRIETARY TEXT REMOVED]

HOLTEC INTERNATIONAL COPYRIGHTED MATERIAL

Table 2.1.12: [PROPRIETARY TEXT REMOVED]

Table 2.1.13: Applicable Codes and Standards for the Materials Used in The HI-STAR 180 Packaging

	Item	Principal Function	Applicable Codes and Reference Standard
1.	Containment Baseplate	Containment Boundary	ASME Code Section III Subsection NB
2.	Containment Shell	Containment Boundary	ASME Code Section III Subsection NB
3.	Containment Closure Flange	Containment Boundary	ASME Code Section III Subsection NB
4.	[PROPRIETARY TEXT REMOVED]Closure Lid	Containment Boundary	ASME Code Section III Subsection NB
5.	[PROPRIETARY TEXT REMOVED]	[PROPRIETARY TEXT REMOVED]	[PROPRIETARY TEXT REMOVED]
6.	Inner Closure Lid Bolts	Containment Boundary	ASME Code Section III Subsection NB
7.	Outer Closure Lid Bolts	Containment Boundary	ASME Code Section III Subsection NB
8.	Vent and Drain Port Plugs	Containment Boundary	ASME Code Section II
9.	Seals and Gaskets	Containment Boundary	Non-Code (Manufacturer's Catalog and Test Data)
10.	Fuel Basket (Metamic-HT)	Positioning of Fuel Assemblies/ Criticality Control	Non-Code (Manufacturer's Test Data [2.1.13])
11.	Shield [PROPRIETARY TEXT REMOVED]	Gamma Shielding	ASME Code Section II
12.	Holtite-B	Neutron Shielding	Non-Code (Manufacturer's Test Data [1.2.17])
13.	Trunnions	Lifting and Handling	ASME Code Section II and ANSI N14.6
14.	[PROPRIETARY TEXT REMOVED] Shield	[PROPRIETARY TEXT REMOVED]	ASME Code Section II
15.	[PROPRIETARY TEXT REMOVED] Shield	[PROPRIETARY TEXT REMOVED]	ASME Code Section II

Table 2.1.13: Applicable Codes and Standards for the Materials Used in The HI-STAR 180 Packaging (Continued)

	Item	Principal Function	Applicable Codes and Reference Standard
16.	Basket Shims	Positioning of Basket in the Containment Cavity	ASTM B221
17.	Impact Limiter Backbone Plate Material	Structural Support of Impact Limiter	ASME Code Section II
18.	Impact Limiter Attachment Rods and Nuts	Structural Support of Impact Limiter	ASME Code Section II
19.	Impact Limiter Crush Material	Impact Energy Absorption	Non-Code (Manufacturer's Catalog and Test Data)
20.	Impact Limiter Insulation Board	Thermal Protection Against Fire Damage	Non-Code (Manufacturer's Catalog and Test Data)
	[PROPRIETARY TEXT REMOVED]		
	[PROPRIETARY TEXT REMOVED]		

Notes:

1. Materials for ITS components not listed above shall meet ASME, ASTM, or other standard industrial codes, as approved by Holtec International. Materials for NITS components shall meet standard industrial codes or the manufacturer's product sheets as approved by Holtec International.

Table 2.1.14: ASME Code Requirements and Alternatives for the HI-STAR 180 Package

Component	Code Section	Code Requirement	Alternative, Justification & Compensatory Measures
Cask Containment System	NB-1000	Statement of requirements for Code stamping of components.	Cask containment boundary is designed, and will be fabricated in accordance with ASME Code, Section III, Subsection NB to the maximum practical extent, but Code stamping is not required.
Cask Containment System	NB-2000	Requires materials to be supplied by ASME-approved material supplier.	Holtec approved suppliers will supply materials with CMTRs per NB-2000.
Cask Containment System	NB-7000	Vessels are required to have overpressure protection.	No overpressure protection is provided. Function of cask vessel is as a radionuclide containment boundary under normal and hypothetical accident conditions. Cask is designed to withstand maximum internal pressure and maximum accident temperatures.
Cask Containment System	NB-8000	States requirements for name, stamping and reports per NCA-8000.	HI-STAR 180 Package to be marked and identified in accordance with 10CFR71. Code stamping is not required. QA data package prepared in accordance with Holtec's approved QA program.

Table 2.1.14: ASME Code Requirements and Alternatives for the HI-STAR 180 Package (Continued)

Component	Code Section	Code Requirement	Alternative, Justification & Compensatory Measures
Cask Containment System	NB-2330	Establish TNDT and test base metal, heat affected zone and weld metal at TNDT + 60°F	Rather than testing to establish the RTNDT as defined in paragraph NB-2331, Reg. Guide 7.12 is specified for materials from 4 to 12 inches thick. The Containment shell is nominally 2.5 inches thick, so the provisions Reg. Guide 7.11 are more applicable for the shell material. Reg. Guide 7.11 for materials up to 4 inches thick does have a reference to SA203 material and requires the TNDT to be <-70°F. Since the specified TNDT of –98°F for the shell material as reflected in Table 2.1.10 is significantly lower, it is in compliance with NB-2330. Table 2.1.10 summarizes the specific impact testing requirements for the Containment Boundary components per Reg. Guides 7.11 and 7.12. A –120°F TNDT will be applied for all containment welds 4 inches and less in thickness. The baseplate and closure flange may need a lower TNDT as specified in the SAR to comply with the thicker base material requirements of the Reg Guide, but all containment welds on the HI-STAR 180 will be involving the shell and have a nominal thickness of 2.5 inches. The ASME code does apply its criteria to the thinner material in NB-4622.3 for heat treating and the weld in NB-4622.4 for heat treatment. Applying a standard Drop Weight and Charpy Impact test temperature criterion of TNDT = -120°F would provide the required properties for the application. A consistent specification will permit optimization of the process for best results.

Table 2.1.14: ASME Code Requirements and Alternatives for the HI-STAR 180 Package (Continued)

Component	Code Section	Code Requirement	Alternative, Justification & Compensatory Measures
Cask Monolithic Shield Cylinders and Bottom Ring Forging	NB-4622	All welds, including repair welds, shall be post-weld heat treated (PWHT).	PWHT of monolithic shield cylinder-to-containment baseplate weld, monolithic shield cylinder top cap plate-to-containment closure flange weld, and bottom ring forging-to-containment baseplate weld do not require PWHT. These welds attach non-pressure retaining parts to pressure retaining parts. The pressure retaining parts are > 6 inches thick. Localized PWHT will cause material away from the weld to experience elevated temperatures that will have an adverse effect on the material properties.
Cask Containment System	NB-5120	Perform radiographic examination after post-weld heat treatment (PWHT).	Radiography of the helium retention boundary welds after PWHT is not required. All welds (including repairs) will have passed radiographic examination prior to PWHT of the entire containment boundary. Confirmatory radiographic examination after PWHT is not necessary because PWHT is not known to introduce new weld defects in nickel steels.

HOLTEC INTERNATIONAL COPYRIGHTED MATERIAL

Table 2.1.15: ASME Code Boiler & Pressure Vessel Code and Other ANSI and Holtec Standards Applicable to HI-STAR 180

1.	Sub-Component ID	Material Procurement	Design Criteria	Stress and Deformation Analysis	Welding	Inspection	Testing
2.	Containment System (includes closure lids and applicable subcomponents, except closure seals)	ASME Code Section III Subsection NB-2000	ASME Code Section III Subsection NB-3000	ASME Code Section III Subsection NB-3000	ASME Code Section III Subsection NB-4000	ASME Code Section III Subsection NB-5000	ASME Code Section III Subsection NB-6000
3.	Fuel Basket	Holtec Manufacturing Manual	Chapter 2 of this SAR	Chapter 2 of this SAR	Holtec Manufacturing Manual (Note 1)	Holtec Manufacturing Manual	Holtec Manufacturing Manual
4.	Lifting Trunnions	ASME Code Section II	ANSI N14.6 (may not apply to bottom trunnions)	ANSI N14.6 (may not apply to bottom trunnions)	ASME Code Section III Subsection NF	Chapter 8 of this SAR	Chapter 8 of this SAR
5.	Shield [PROPRIETARY TEXT REMOVED]	ASME Code Section II Part A	Chapter 2 of this SAR	Chapter 2 of this SAR	ASME Code Section IX	ASME Code Section V	Chapter 2 of this SAR
6.	Basket Shims	ASTM B211	Chapter 2 of this SAR	Chapter 2 of this SAR	Not Applicable	Not Applicable	Not Applicable
7.	Neutron Shielding	Holtec Manufacturing Manual	Reference [1.2.17]	Not Applicable	Holtec Manufacturing Manual	Holtec Manufacturing Manual	Holtec Manufacturing Manual and Chapter 8 of this SAR

Note 1: Holtec Manufacturing Manuals contain detailed instructions for manufacturing of the subassemblies and the complete component in accordance with the applicable SAR, Codes, Standards, and for special products, such as Metamic, the supplier's specifications. The Holtec Manufacturing Manual is a compilation of procedures, travelers, weld maps, specifications, Standards, etc, to ensure the manufacturing of the HI-STAR components in full accord with this SAR. The manufacturing manuals are prepared, reviewed, and approved by use by the Holtec Manufacturing Division and Nuclear Division, and the latest issue maintained in the company's network under Holtec's configuration control system.

HOLTEC INTERNATIONAL COPYRIGHTED MATERIAL

Table 2.1.15: ASME Code Boiler & Pressure Vessel Code and Other ANSI and Holtec Standards Applicable to HI-STAR 180 (Continued)

8.	Sub-Component ID	Material Procurement	Design Criteria	Stress and Deformation Analysis	Welding	Inspection	Testing
9.	Bottom Steel Cover Plate	ASME Code Section II Part A	Chapter 2 of this SAR	Chapter 2 of this SAR	ASME Code Section IX	ASME Code Section V	Not Applicable
10.	Impact Limiter Backbone Structure	ASME Code Section II Part A	Chapter 2 of this SAR	Chapter 2 of this SAR	ASME Code Section IX	ASME Code Section V	Not Applicable

Note: ITS Components not listed above shall be procured, designed, fabricated, inspected, and tested in accordance with ASME, ASTM, AWS, or other applicable industrial codes as specified in Holtec International's manufacturing documents.

HOLTEC INTERNATIONAL COPYRIGHTED MATERIAL

Table 2.1.16: [PROPRIETARY TEXT REMOVED]

2.2 MATERIALS

2.2.1 Mechanical Properties and Specifications

This subsection provides the mechanical properties used in the structural evaluations. The properties include, as appropriate, yield stress, ultimate stress, modulus of elasticity, strength, weight density, and coefficient of thermal expansion. The property values are presented for a range of temperatures for which structural calculations are performed.

2.2.1.1 Structural Materials

2.2.1.1.1 Nickel Alloy, Low-Allow Steel

The nickel alloy and low-alloy steels used in the HI-STAR 180 packaging are SA-203E and SA-350 LF3, respectively. The material properties (used in structural evaluations) of SA-203 E and SA-350 LF3 are given in Table 2.2.1.

Properties of steel, which are not included in any of the tables at the end of the section, are weight density and Poisson's ratio. These properties are assumed constant for all structural analyses. The values used are shown in the table below.

Property	Value
Weight Density, kg/m^3 (lb/in^3)	7,833 (0.283) 8,027 (0.290) (for Stainless Steel)
Poisson's Ratio	0.30

2.2.1.1.2 Bolting and Trunnion Materials

Material properties (for structural evaluations) of the closure lid bolting and trunnion materials used in the HI-STAR 180 Package are given in Tables 2.2.2 and 2.2.3.

2.2.1.1.3 Fuel Basket

The Fuel Basket is made of Metamic-HT.

Metamic-HT, a high strength, nanotechnology-based counterpart of the classic Metamic neutron absorber material, is extensively characterized in the supplier's report [2.1.13]. Minimum guaranteed values (MGVs) of Metamic-HT, based on the supplier's test report (as adopted by Holtec) [2.1.13] and Holtec's own material test program [1.2.27] are provided in Table 1.2.12.

2.2.1.1.4 Weld Material

All weld filler materials utilized in the welding of the Code components will comply with the provisions of the appropriate ASME Code Subsection (e.g., cited paragraphs of Subsection NB and with applicable paragraphs of Section IX). All non-Code welds will be made using weld procedures that meet ASME Section IX, AWS D1.1, D.1.2 or equivalent. The minimum tensile strength of the weld wire and filler material (where applicable) will be equal to or greater than the tensile strength of the base metal listed in the ASME Code.

All non-destructive examinations specifications will comply with Section V of the ASME Code.

2.2.1.1.5 AL-STAR Impact Limiter

The AL-STAR impact limiter for the HI-STAR 180 Package is shown in the drawing package in Section 1.3. The impact limiter consists of a rigid cylindrical core, a cylindrical skirt that girdles the cask forging, the energy absorbing material, an outer skin, an insulating board that protects the impact limiter crush material from the relatively high temperature in the cask, and attachment bolts. The energy absorbing material is positioned in the impact limiter to realize adequate crush modulus in all potential impact modes. The external surface of the impact limiter consists of a stainless steel skin to provide long-term protection against weather and inclement environmental conditions. Attachment bolts are also made of stainless steel, which imparts a high fracture toughness and high ductility in the entire temperature range of service.

Rail transport considerations limit the maximum diameter of the impact limiter. The axial dimension of the impact limiter is limited by the considerations of maximum permissible packaging weight for rail transport. Within the limitations of space and weight, the impact limiter should possess sufficient energy absorption capacity so as to meet the structural demands on the package under all postulated drop orientations. The sizing of the impact limiter internal structure is principally guided by the above considerations. For example, in order to ensure that a sufficient portion of the energy absorbing material participates in lateral impacts, a thick high strength steel shell, buttressed with gussets, provides a hard backing surface for the honeycomb material to crush against.

The material properties for the stainless and carbon steels, for structural evaluations, are provided in Tables 2.2.4 and 2.2.5, respectively. Material properties for the stainless steel impact limiter attachment bolts are provided in Table 2.2.6.

Two properties of the energy absorbing material germane to its function are the crush strength and the nominal density. The crush strength is the more important of the two properties; the density is significant in establishing the total weight of the package. The crush strength increases monotonically with density. Honeycomb materials with a wide range of density and crush strength are available. A characteristic load-crush relation for a honeycomb material is shown in Figure 2.2.1 for a constant crush area. The relation shows an initial sharp peak, then an essentially constant force over a large crush depth, and finally a significant increase of the force when the material becomes compacted. To eliminate the initial peak, which could potentially

HOLTEC INTERNATIONAL COPYRIGHTED MATERIAL

result in higher g-loads at the beginning of the impact, all honeycomb material for the HI-STAR 180 is pre-crushed by the material supplier. Table 2.2.10 documents the *critical characteristics* of the impact limiter material in tabular form.

For the HI-STAR 180 cask, two crush strengths are utilized to optimize the impact limiter's performance. The drawings in Section 1.3 show the location of the crush materials for predominately lateral impact (designated as Type 1) and for predominately longitudinal impact (designated as Type 2); Table 2.2.10 documents the impact limiter crush strengths in tabular form. The crush strength, being a critical characteristic, will be specified in the purchase specification for material procurement.

Table 2.2.10 also contains the required *critical characteristics* of the insulation board material, which is shown in the licensing drawing, [PROPRIETARY TEXT REMOVED].

[PROPRIETARY TEXT REMOVED]

The pressure-crush behavior of the energy absorbing material is insensitive to the environmental temperature range germane to Part 71 transport (-20 degrees F to 100 degrees F). This was demonstrated by testing performed to support the licensing of the HI-STAR 100 transport package [2.7.1].

HOLTEC INTERNATIONAL COPYRIGHTED MATERIAL

2.2.1.1.6 Closure Lid Seals

The containment integrity of the HI-STAR 180 Package relies on two concentric gasket joints located in [PROPRIETARY TEXT REMOVED] closure lid [PROPRIETARY TEXT REMOVED], as shown in the licensing drawings in Section 1.3. [PROPRIETARY TEXT REMOVED]Each gasket acts autonomously, thus providing a double barrier against leakage for each closure lid.

To ensure that the effectiveness of the leak barriers is optimal, the grooves are machined in the precise configuration and surface finish called for the type of [PROPRIETARY TEXT REMOVED] gasket [PROPRIETARY TEXT REMOVED] selected for this application. The gasket chosen for the HI-STAR 180 cask must fulfill the principal requirements set down in the following:

[PROPRIETARY TEXT REMOVED]

The load required to "seat" the gaskets is a small percentage of the total applied bolt preload force; hence the required "seating load" (an ASME Boiler & Pressure Vessel code term) is not an important parameter. The size of the gasket in relation to the size of the groove, on the other hand, is a critical dimension that is based on the gasket supplier's test data and which must be controlled through the gasket Procurement Specification. Other critical characteristics of the HI-STAR 180 gasket that must be controlled to ensure a robust joint performance are listed in Table 2.2.12. The gaskets will be procured as an *Important-to-Safety* part.

Using the above criteria, the closure seals have been conservatively specified to provide a high degree of assurance of leak tightness under normal and accident conditions of transport so that package service conditions at normal or accident pressures under high and low temperatures will not challenge the capabilities of cask closure seals. Creep of the cask closure seals, even under long term use in a loaded cask (40 years), is not credible due to its materials of construction and nickel alloy seal spring. The specifications for the closure lid seals are provided below with considerable margin over temperatures and pressures provided in Chapter 3 for normal and accident conditions of transport:

[PROPRIETARY TEXT REMOVED]

Table 2.2.12 provides the data on the bolted joint loads, including the load needed to "seat" the closure plate gaskets.

2.2.1.1.7 [PROPRIETARY TEXT REMOVED]

2.2.1.2 Nonstructural Materials

2.2.1.2.1 Monolithic Shield Cylinder

The monolithic shield cylinder is not in the primary load path of the HI-STAR 180 cask during a lifting operation since it has no connection to the upper trunnions. The monolithic shield cylinders do, however, girdle the containment shell and thus may act in concert with the containment shell during Hypothetical Accident Conditions of Transport. Necessary structural properties for the monolithic shield, for analysis purposes, are the yield and ultimate strength; a representative set of properties is tabulated in Table 2.2.7, and *critical characteristics* are provided in Table 2.1.16.

2.2.1.2.2 Holtite Neutron Shielding Material

The non-structural properties of the neutron shielding material are provided in Section 1.2. Since the Holtite is included in the structural analysis model, appropriate mechanical properties are listed in Table 2.2.8.

2.2.1.2.3 Fuel Basket Supports

The fuel basket supports (basket shims), made of an aluminum alloy 2219-T8511, provide the heat transfer bridge between the basket and the cask inside surface, and serve to position the fuel basket. Representative mechanical properties for the basket supports are tabulated in Table 2.2.9.

[PROPRIETARY TEXT REMOVED]

2.2.1.2.4 Cask Coating

The HI-STAR 180 cask exterior steel surfaces are coated with Carboguard® 890 (see www.carboline.com for product data sheet) or equivalent surface preservative. Carboguard ® 890 and equivalent surface preservatives have provided years of proven performance on HI-STAR 100 casks. In addition, exterior surfaces of the cask are easily inspected and recoated as necessary. For cask coatings, alternate surface preservatives are determined equivalent per the recommendation of a coating manufacturer and with Holtec approval. Carboguard 890 is the product name at the time of this SAR writing. Chemically identical products with different names are permitted. Other coatings that can be shown to have had proven performance in similar applications and environments are permitted.

2.2.1.2.5 Cask Liner

A cask liner is required to protect containment boundary steel components against increased corrosion from submersions into the spent fuel pools. The HI-STAR 180 cask cavity and inter-lid space carbon steel surfaces (except for threaded features) may be lined with either a) conventional surface preservative or b) aluminum oxide. Conventional surface preservative over

aluminum oxide is also acceptable where supported by manufacturer recommendation.

a) Conventional Surface Preservative

The HI-STAR 180 cask interior steel surfaces are coated with Thermaline® 450 (see www.carboline.com for product data sheet) or equivalent surface preservative. Thermaline® 450 and equivalent surface preservatives have provided years of proven performance on HI-STAR 100 casks. Conventional surface preservatives refer to sprayed/rolled on and cured "paints". Although interior cask surfaces are not accessible for routine liner repair during loaded cask operation, the dry helium environment protects cask contents and internals, including cask liners from long-term degradation. Conventional surface preservatives shall be applied in accordance with the manufacturer's recommendation and to the recommended dry film thickness. Conventional surface preservatives shall not result in significant chemical reaction with borated water. Thermaline® 450 is the product name at the time of this SAR writing. Chemically identical products with different names are permitted. The following critical characteristics are specified conservatively for conventional surface preservatives and in order of importance to guide the in the selection of equivalent surface preservatives:

[PROPRIETARY TEXT REMOVED]

b) Aluminum Oxide

Aluminum oxide provides excellent corrosion resistance and is compatible with the cask aluminum basket supports. [PROPRIETARY TEXT REMOVED]

Aluminum oxide may be applied by the commonly used thermal spray method along the cask inner surfaces. Approved procedures will be developed for performing the operation taking into consideration or fully applying available guidance from recognized standards. The following standards are available for developing procedures and for qualifying thermal spray contractors or operators.

1) ANSI/AWS C2.18-93 "Guide for the Protection of Steel with Thermal Sprayed Coating of Aluminum and Zinc and Their Alloys and Composites"

2) NACE No. 12/AWS C2.23M/SSPC-CS 23.00 "Specification for the Application of Thermal Spray Coatings (Metallizing) of Aluminum, Zinc, and Their Alloys and Composites for the Corrosion Protection of Steel"

3) SSPC 04-13 SSPC-QP 6 "Standard Procedure for Evaluating the Qualifications of Contractors Who Apply Thermal Spray (Metallizing) for Corrosion Protection of Steel and Concrete Structures"

4) ANSI/AWS C2.16/C2.16M:2002 "Guide for Thermal Spray Operator Qualification"

Other standard processes for aluminum oxide thermal spray and its application, which are supported by recognized standards, may be used subject to a suitability assessment by Holtec International.

2.2.1.2.6 Lead

Lead is not considered as a structural member of the HI-STAR 180 Package. However, it is included in the dynamic simulation models for Normal and Accident Conditions of Transport. Applicable mechanical properties of lead are provided in Table 2.2.11.

2.2.2 Chemical, Galvanic or Other Reactions

There is no credible mechanism for significant chemical or galvanic reactions in the packaging during loading operations or in the package during transport.

Similar to the HI-STAR 100 packaging, the HI-STAR 180 packaging combines low-alloy and nickel alloy steels, carbon steels, neutron and gamma shielding, and bolting materials. All of these materials have a long history of non-galvanic behavior within close proximity of each other. The external surfaces of the cask are coated to preclude surface oxidation. The internal surfaces of the cask are lined to preclude any significant surface oxidation. The coatings and liners do not chemically react significantly with borated water. The cask is dried and helium backfilled as discussed in Chapter 7 to eliminate any credible corrosion from moisture and oxidizing gasses. [PROPRIETARY TEXT REMOVED] Therefore, chemical, galvanic or other reactions involving the cask materials are unlikely and are not expected.

[PROPRIETARY TEXT REMOVED]

In accordance with NRC Bulletin 96-04 [2.2.4], a review of the potential for chemical, galvanic, or other reactions among the materials of the HI-STAR 180 Package, its contents and the operating environment, which may produce adverse reactions, has been performed. As a result of this review, no operations were identified which could produce adverse reactions. No closure welding is performed and thus hydrogen generation while the cask is in the pool is of minor consequence to cask operations based on previous experience with the same cask materials. Because no welding activities are involved in the cask closure operations, the potential of a hydrogen ignition event does not exist.

2.2.3 Effects of Radiation on Materials

The general physical effects of radiation of metals by fast neutrons and other high-energy particles are summarized in the following table taken from a DOE Handbook on Material Science [2.2.3].

General Effect of Fast Neutron Irradiation on Metals	
Property Increases	Property Decreases
• Yield Strength • Tensile Strength • NDT Temperature • Young's Modulus (Slight) • Hardness • High Temperature Creep Rate (During Irradiation)	• Ductility • Stress-Rupture Strength • Density • Impact Strength • Thermal Conductivity

The HI-STAR 180 Package is composed of materials that either have a proven history of use in the nuclear industry or have been extensively tested. The radiation levels from spent nuclear fuel do not affect the packaging materials. Gamma radiation damage to metals (e.g., aluminum, stainless steel, and carbon steel) does not occur until the fluence level reaches 10^{18} rads or more. The 40-year gamma fluence (assuming design basis fuel for 40 years without radioactive decay) from the spent nuclear fuel transported in the HI-STAR 180 Package is on the order of 10^9 rads and reduces significantly as it penetrates through cask components. Moreover, significant radiation damage due to neutron exposure does not occur for neutron fluences below approximately 10^{19} n/cm^2 [2.2.3, 2.2.4, 2.2.5], which is far greater than the 40-year neutron fluence from spent nuclear fuel transported in the HI-STAR 180 Package, which is on the order of 10^{16} n/cm^2 assuming design basis fuel for 40 years without radioactive decay. Also, as indicated in reference [2.2.3], "The effects listed in the table above are generally less significant at elevated temperatures for a given fluence and some defects can be removed by heating (annealing)."

As discussed in Section 1.2 and its references, the Metamic-HT neutron absorber and Holtite have been tested extensively to prove that it will not degrade over the cask design life of 40 years. With the high nickel content in its spring, the cask closure seal materials are also most resistant to radiation. No adhesives are used in the cask packaging and packaging coatings (especially cask liners) are selected for the high radiation environment.

Table 2.2.1: Containment Boundary – Mechanical Properties

Temperature °C (°F)	SA-350 LF3/SA-203 E					
	S_y	S_u	E	α	S_y	S_u
-73.30 (-100)	258.6 (37.5)	482.6 (70.0)	19.72 (28.6)	-	275.8 (40.0)	482.6 (70.0)
37.78 (100)	258.6 (37.5)	482.6 (70.0)	19.03 (27.6)	11.7 (6.5)	275.8 (40.0)	482.6 (70.0)
93.33 (200)	235.8 (34.3)	482.6 (70.0)	18.68 (27.1)	12.06 (6.7)	252.3 (36.6)	482.6 (70.0)
148.89 (300)	228.9 (33.2)	482.6 (70.0)	18.41 (26.7)	12.42 (6.9)	244.1 (35.4)	482.6 (70.0)
204.4 (400)	220.6 (32.0)	482.6 (70.0)	18.07 (26.2)	12.78 (7.1)	235.8 (34.2)	482.6 (70.0)
260 (500)	209.6 (30.4)	482.6 (70.0)	17.72 (25.7)	13.14 (7.3)	224.1 (32.5)	482.6 (70.0)
316 (600)	194.4 (28.2)	482.6 (70.0)	17.31 (25.1)	13.32 (7.4)	207.5 (30.0)	482.6 (70.0)

Definitions:

S_y = Yield Stress MPa (ksi)
S_u = Ultimate Stress MPa (ksi)
α = Coefficient of Thermal Expansion, cm/cm-°C x 10^{-6} (in./in. per degree F x 10^{-6})
E = Young's Modulus MPa x 10^4 (ksi x 10^3)

Notes:
1. Source for S_y values is Table Y-1 of [2.1.6].
2. Source for S_u values is ratioing S_m values.
3. Source for α values is material group 1 in Table TE-1 of [2.1.6].
4. Source for E values is material group B in Table TM-1 of [2.1.6].

Table 2.2.2: Outer Closure Lid Bolt – Mechanical Properties

SA-193 Grade B7 [less than 64 mm (2.5 in) diameter]					
Temperature, °C (°F)	S_y	S_u	E	α	S_m
38 (100)	724.0 (105.0)	861.8 (125.00)	20.3 (29.5)	11.7 (6.5)	241.3 (35.0)
93.3 (200)	675.9 (98.0)	861.8 (125.00)	19.99 (29.0)	12.06 (6.7)	224.8 (32.6)
149 (300)	648.8 (94.1)	861.8 (125.00)	19.65 (28.5)	12.42 (6.9)	216.5 (31.4)
204 (400)	630.9 (91.5)	861.8 (125.00)	19.31 (28.0)	12.78 (7.1)	210.3 (30.5)
260 (500)	610.2(88.5)	861.8 (125.00)	18.89 (27.4)	13.14 (7.3)	203.4 (29.5)
316 (600)	588.1 (85.3)	861.8 (125.00)	18.55 (26.9)	13.32 (7.4)	195.8 (28.4)

Definitions:

S_y = Yield Stress, MPa (ksi)
α = Mean Coefficient of thermal expansion, cm/cm-°C x 10^{-6} (in/in-°F x 10^{-6})
S_u = Ultimate Stress, MPa (ksi)
E = Young's Modulus, MPa x 10^4 (psi x 10^6)

Notes:

1. Source for S_y values is Table Y-1 of [2.1.6] for ferrous materials.
2. Source for S_u values is Table U of [2.1.6] for ferrous materials, or from Section II, Part A. Where ultimate strength is unavailable, values above 300 deg. F are based on 100 deg.F value multiplied by ratio of yield strength at room temperature to yield strength at desired temperature.
3. Source for α values is Tables TE-1 and TE-4 of [2.1.6] for ferrous materials.
4. SA-705 630/SA-564 630 (H1025) per Table 2.2.3 is optional material for Outer Closure Lid Bolts.

Table 2.2.3: Cask Trunnion and Inner Closure Lid Bolt - Mechanical Properties

SA-705 630, SA-564 630 (H1025 Condition)				
Temperature, °C (°F)	S_y	S_u	E	α
38 (100)	999.5 (145.0)	1068 (155)	19.7 (28.5)	11.16 (6.2)
93.3 (200)	924.4 (134.1)	1068 (155)	19.1 (27.8)	11.34 (6.3)
149 (300)	885.1 (128.4)	1068 (155)	18.8 (27.2)	11.52 (6.4)
204 (400)	854.1 (123.9)	913.0 (132.4)	18.4 (26.7)	11.70 (6.5)
260 (500)	827.9 (120.1)	885.1 (128.4)	18. (26.1)	11.70 (6.5)
288 (550)	816.2 (118.4)	872.7 (126.6)	17.8 (25.8)	11.88 (6.6)

Definitions:

S_y = Yield Stress, MPa (ksi)
α = Mean Coefficient of thermal expansion, cm/cm-°C x 10^{-6} (in/in-°F x 10^{-6})
S_u = Ultimate Stress, MPa (ksi)
E = Young's Modulus, MPa x 10^4 (psi x 10^6)

Notes:

1. Source for S_y values is Table Y-1 of [2.1.6] for ferrous materials.
2. Source for S_u values is Table U of [2.1.6] for ferrous materials, or from Section II, Part A. Where ultimate strength is unavailable, values above 300 deg. F are based on 100 deg.F value multiplied by ratio of yield strength at room temperature to yield strength at desired temperature.
3. Source for α values is Table TE-1 of [2.1.6] for ferrous materials. Values for α are for H1075 condition in lieu of H1025 condition.
4. SA-705 630 and SA-564 630 (both UNS No. S17400) have the same chemistry requirements and are considered equivalent for the intended application.

Table 2.2.4: Stainless Steel – Mechanical Properties (Minimum Values of SA-240 304, 304LN, 316, 316LN)

Temperature °C (°F)	S_y	S_u	α	E
-40 (-40)	206.8 (30.0)	517.1 (75.0)	14.58 (8.1)*	19.91 (28.88)
38 (100)	206.8 (30.0)	517.1 (75.0)	15.48 (8.6)	19.44 (28.2)
65.6 (150)	186.8 (26.7)	-	15.84 (8.8)	-
93.3 (200)	172.4 (25.0)	489.5 (71.0)	16.02 (8.9)	18.96 (27.5)
121 (250)	162.8 (23.6)	-	16.38 (9.1)	-
149 (300)	155.1 (22.5)	456.4 (66.2)	16.56 (9.2)	18.62 (27.0)
204 (400)	142.7 (20.7)	441.3 (64.0)	17.1 (9.5)	18.2 (26.4)

Definitions:

S_y = Yield Stress, MPa (ksi)
α = Mean Coefficient of thermal expansion, cm/cm-°C x 10^{-6} (in/in-°F x 10^{-6})
S_u = Ultimate Stress, MPa (ksi)
E = Young's Modulus, MPa x 10^4 (psi x 10^6)

Notes:

1. Source for S_y values is Table Y-1 of [2.1.6].
2. Source for S_u values is Table U of [2.1.6].
3. Source for α values is Table TE-1, Group 3 of [2.1.6]. * Value at –40 deg. F is extrapolated.
4. Source for E values is material group G in Table TM-1 of [2.1.6].
5. The listed yield and ultimate stress is the minimum value of SA-240 304, 304LN, 316, and 316LN.

Table 2.2.5: Miscellaneous Steel – Mechanical Properties

Temperature °C (°F)	SA-36			
	S_y	S_u	α	E
37,8 (100)	248.2 (36.0)	399.9 (58.0)	11.7 (6.5)	20.17 (29.26)
93,3 (200)	227.5 (33.0)	399.9 (58.0)	12.06 (6.7)	19.86 (28.8)
149 (300)	219.3 (31.8)	399.9 (58.0)	12.42 (6.9)	19.51 (28.3)
204 (400)	212.4 (30.8)	399.9 (58.0)	12.78 (7.1)	19.24 (27.9)
260 (500)	202.0 (29.3)	399.9 (58.0)	13.14 (7.3)	18.82 (27.3)
316 (600)	190.3 (27.6)	399.9 (58.0)	13.32 (7.4)	18.27 (26.5)
371 (700)	177.9 (25.8)	399.9 (58.0)	14.04 (7.8)	17.58 (25.5)

Temperature °C (°F)	SA-516 Grade 70			
	S_y	S_u	α	E
38 (100)	262.0 (38.0)	482.6 (70.0)	11.7 (6.5)	20.17 (29.26)
93.3 (200)	239.9 (34.8)	482.6 (70.0)	12.06 (6.7)	19.86 (28.8)
149 (300)	231.7 (33.6)	482.6 (70.0)	12.42 (6.9)	19.51 (28.3)
204 (400)	224.1 (32.5)	482.6 (70.0)	12.78 (7.1)	19.24 (27.9)
260 (500)	213.7 (31.0)	482.6 (70.0)	13.14 (7.3)	18.82 (27.3)
316 (600)	200.6 (29.1)	482.6 (70.0)	13.32 (7.4)	18.27 (26.5)
371 (700)	187.5 (27.2)	482.6 (70.0)	14.04 (7.8)	17.58 (25.5)

Table 2.2.5 (Continued): Miscellaneous Steel – Mechanical Properties

Definitions:

S_y = Yield Stress, MPa (ksi)
α = Mean Coefficient of thermal expansion, cm/cm-°C x 10^{-6} (in/in-°F x 10^{-6})
S_u = Ultimate Stress, MPa (ksi)
E = Young's Modulus, MPa x 10^4 (psi x 10^6)

Notes:

1. Source for S_y values is Table Y-1 of [2.1.6].
2. Source for S_u values is Table U of [2.1.6].
3. Source for α values is material group 1 in Table TE-1 of [2.1.6].
4. Source for E values is "Carbon steels with C less than or equal to 0.30%" in Table TM-1 of [2.1.6].

Table 2.2.6: Yield and Ultimate Strength of SA-193 B8S Impact Limiter Attachment Bolts

Minimum Room Temperature Yield and Ultimate Stress for Attachment Bolt Calculations	
Item	**MPa (ksi)**
Yield Stress	344.7 (50)
Ultimate Stress	655.0 (95)

Note: Source for stress is Table 3 of [2.1.6].

Table 2.2.7: Monolithic Shield Cylinder – Mechanical Properties

SA-352 LCC / A352-93 LCC				
Temp. °C (°F)	**S_y**	**S_u**	**E**	**α**
37.8 (100)	275.8 (40.0)	482.6 (70.0)	20.2 (29.3)	11.7 (6.5)
93.33 (200)	251.7 (36.5)	482.6 (70.0)	19.86 (28.8)	12.06 (6.7)
148.89 (300)	244.8 (35.5)	482.6 (70.0)	19.51 (28.3)	12.42 (6.9)
204.2 (400)	234.4 (34)	482.6 (70.0)	19.24 (27.9)	12.78 (7.1)
260 (500)	223.4 (32.4)	482.6 (70.0)	18.82 (27.3)	13.14 (7.3)

Definitions:

S_y = Yield Stress, MPa (ksi)
α = Mean Coefficient of thermal expansion, cm/cm °C x 10^{-6} (in/in-°F x 10^{-6})
S_u = Ultimate Stress, MPa (ksi)
E = Young's Modulus, MPa x 10^4 (psi x 10^6)

Notes:

1. Source for S_y values is Table Y-1 of [2.1.6].
2. Source for S_u values is Table U of [2.1.6].
3. Source for α values is Table TE-1 (for Group 1) of [2.1.6].
4. Source for E values is "Carbon Steels with C less than 0.25%" in Table TM-1 of [2.1.6].
5. ASTM A352-93 LCC is equivalent material per ASME Code Section II (same properties are considered to apply in any analysis).

HOLTEC INTERNATIONAL COPYRIGHTED MATERIAL

Table 2.2.8: [PROPRIETARY TEXT REMOVED]

Table 2.2.9: Basket Shims - Nominal Mechanical Properties

Aluminum Alloy (B221 2219-T8511)					
Temp. °C (°F)	S_y	S_u	E	α	% Elongation
25 (75)	340 (49)	450 (65)	7.2 (10.5)	–	11
150 (300)	285 (41)	345 (50)	6.8 (9.5)	23.9 (13.3)	14
204 (400)	220 (32)	260 (38)	6.3 (9.1)	24.5 (13.6)	18
230 (450)	200 (29)	235 (34)	6.1 (8.8)	24.8 (13.8)	19
260 (500)	180 (26)	205 (30)	5.9 (8.5)	25.0 (13.9)	19
290 (550)	115 (17)	130 (19)	5.5 (8.0)	25.4 (14.1)	23

Definitions:

S_y = Yield Stress, MPa (ksi)
α = Mean Coefficient of thermal expansion, cm/cm-°C x 10^{-6} (in/in-°F x 10^{-6})
S_u = Ultimate Stress, MPa (ksi)
E = Young's Modulus, MPa x 10^4 (psi x 10^6)

Notes:

1. Source for S_y, S_u, E and % Elongation values is "Properties of Aluminum Alloys", page 82 [2.2.7] (properties listed in the table above are not affected by time at temperature).
2. Source for α is Table TE-2 of [2.1.6] (values listed in TE-2 are also considered representative of Aluminum Alloy (2219-T8511) (UNS No. A92219)).

Table 2.2.10[2]: Critical Characteristics of the AL-STAR Impact Limiter Crush Material, [PROPRIETARY TEXT REMOVED]

Item & Property Category	Value	Comment
Crush strength (nominal), σ_c, of crush material, psi (Primary property) • Type 1 • Type 2	(Target volumetric average value) 2,550 2,000	[PROPRIETARY TEXT REMOVED]
Density (reference) of crush material, lb/ft^3 (Secondary property) • Type 1 • Type 2	32.4 – 34.8 27.3 – 31.2	[PROPRIETARY TEXT REMOVED]
[PROPRIETARY TEXT REMOVED]	[PROPRIETARY TEXT REMOVED]	[PROPRIETARY TEXT REMOVED]
[PROPRIETARY TEXT REMOVED]	[PROPRIETARY TEXT REMOVED]	[PROPRIETARY TEXT REMOVED]
[PROPRIETARY TEXT REMOVED]	[PROPRIETARY TEXT REMOVED]	-
[PROPRIETARY TEXT REMOVED]		

[2] This table is referenced in Chapter 8 and hence cannot be altered without a license amendment.

Table 2.2.11: Mechanical Properties of Lead

LEAD:	-40°C (-40°F)	-29°C (-20°F)	21°C (70°F)	93°C (200°F)	149°C (300°F)	316°C (600°F)
Yield Strength, MPa (psi)	4.83 (700)	4.69 (680)	4.41 (640)	3.38 (490)	2.62 (380)	0.138 (20)
Modulus of Elasticity, MPa (ksi)	1.65E+4 (2.4E+3)	1.65E+4 (2.4E+3)	1.59E+4 (2.3E+3)	1.38E+4 (2.0E+3)	1.31E+4 (1.9E+3)	1.03E+4 (1.5E+3)
Coefficient of Thermal Expansion, cm/cm/°C (in/in/°F)	28.1E-6 (15.6E-6)	28.3E-6 (15.7E-6)	29.0E-6 (16.1E-6)	29.9E-6 (16.6E-6)	31.0E-6 (17.2E-6)	36.4E-6 (20.2E-6)
Poisson's Ratio	0.40					
Density, kg/m^3 (lb/cubic ft.)	11,340 (708)					

Note: Values in this table are taken from [2.2.6].

HOLTEC INTERNATIONAL COPYRIGHTED MATERIAL

Table 2.2.12: [PROPRIETARY TEXT REMOVED]

HOLTEC INTERNATIONAL COPYRIGHTED MATERIAL

Table 2.2.13: [PROPRIETARY TEXT REMOVED]

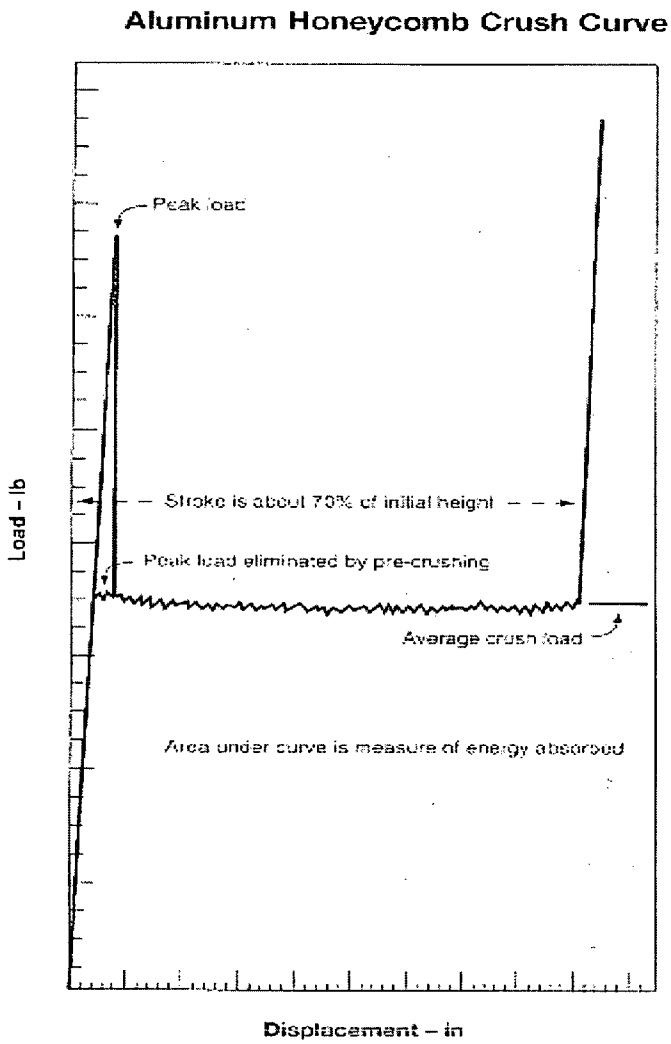

Figure 2.2.1: Aluminum Honeycomb Load vs. Crush Curve (Typical, reproduced from Ref. [2.1.1])

HOLTEC INTERNATIONAL COPYRIGHTED MATERIAL

2.3 FABRICATION AND EXAMINATIONS

2.3.1 Fabrication

Consideration of the manufacturing process of a cask must be an integral part of its design evolution to ensure that the as-engineered cask can be manufactured to meet the intents of the design. For HI-STAR 180, as in all other cask models, Holtec International utilizes the following key criteria during the design stage to ensure that design objectives will be realized during manufacturing:

i. The tolerances specified for the sub-components are achievable with state-of-the-art equipment and machinery.

ii. The design is not overly reliant on tight tolerances to ensure functional compliance.

iii. Suitable (compatible) material combinations are specified whenever two dissimilar materials are to be welded.

iv. Post-weld heat treatment and other means to alleviate weld shrinkage stresses are specified, as appropriate, to enhance the quality of the hardware and to comply with the applicable ASME Code.

v. The manufacturing sequence must permit all required non-destructive examinations to be performed and remedial repairs to be made to ensure compliance with the applicable codes and standards. This requirement is particularly relevant to the Containment Boundary in which the butt-welded joints must undergo 100% volumetric examination.

vi. The manufacturing sequence must permit machining of critical surfaces, such as the gasket seating surfaces in the top flange, to be carried out after all welding and forming related operations (that inevitably produce distortion) have been completed.

vii. The manufacturing steps do not involve operations that entail unnecessary risk to worker safety.

The above objectives are fully realized in the manufacturing process envisioned for HI-STAR 180. Of course, there are several candidate manufacturing sequences that will meet the above criteria. In the following, an overview of one such acceptable fabrication sequence for the HI-STAR 180 is presented to illustrate its fabricability while meeting the above objectives. Other sequences may be used provided they meet the above criteria for quality fabrication

The HI-STAR 180 cask body is assembled from four major assemblies; the containment closure flange, the containment shell assembly (including the containment baseplate), the monolithic shield cylinder assembly and the bottom forging assembly (Figure 2.3.1). The thickness of these components is specified over-size to allow for machining to the necessary tolerance. The assembly of the HI-STAR 180 cask body occurs upside down starting with the containment closure flange.

The containment closure flange assembly is placed upside down and the containment shell assembly (Figure 2.3.2) is then aligned and mated to the containment closure flange and secured with full penetration welds. All containment welds are radiographed in accordance with ASME Section III, Subsection NB requirements. After these containment boundary components are welded together and NDE is complete, the entire containment unit is heat treated (stress relieved) to eliminate residual stresses induced during the welding process. At this point the containment unit outside diameter is machined to the specified tolerance, and the containment inside diameter is rough machined and sealing surfaces are weld prepped for the stainless steel overlay. [PROPRIETARY TEXT REMOVED]

[PROPRIETARY TEXT REMOVED] The bottom forging ring is installed over the bottom end of the containment shell and secured to the cask assembly by welds (Figure 2.3.6). Finally, the bottom forging assembly (Figure 2.3.7) is completed by installation of the bottom [PROPRIETARY TEXT REMOVED] gamma shield, bottom neutron shield and bottom steel cover plate into the bottom forging ring. The bottom steel cover plate contains threaded inserts for the attachment of the bottom impact limiter. Next, the stainless steel overlay is placed in the bore for the closure lid sealing surfaces. Final machining of the cask ID, sealing surfaces and threaded connections are performed, followed by the installation of the internal structural supports, trunnions, and all other threaded fasteners. The HI-STAR 180 cask is then coated and lined in accordance with Subparagraphs 2.2.1.2.4 and 2.2.1.2.5, respectively. Finally, the basket shims, fuel basket and closure lids are installed.

The HI-STAR 180 fuel basket is a rectilinear structure constructed of Metamic-HT plates of uniform thickness. [PROPRIETARY TEXT REMOVED] To further strengthen the structure as a single component, corner joints are welded. The corner welds are made in accordance with a Weld Process Specification that complies with Section IX. The fully assembled F-37 fuel basket is shown in Figure 2.3.10.

As shown in the basket drawings in the licensing drawing package in Section 1.3, certain peripheral junctions in the fuel basket grid work are welded to provide additional dimensional fixity to the basket. Strictly speaking, these welds are not required for the basket to render its structural function. Nevertheless, they are incorporated in the basket's design and included in the structural finite element evaluations. The minimum strength of the fillet welds is assumed to be equal to 60% of the MGV value in Table 1.2.12. [PROPRIETARY TEXT REMOVED]

2.3.2 Examinations

The inspection of the HI-STAR 180 cask is, at all stages of its manufacture, central to ensuring compliance with the applicable Codes and Standards. The HI-STAR 180 packaging is subject to a battery of NDEs to demonstrate that the manufactured product will render its intended function including the fabrication helium leakage test to ANSI N14.5. The inspection begins with the raw material product forms (such as forgings, plates, castings, etc.) procured to the applicable Holtec

HOLTEC INTERNATIONAL COPYRIGHTED MATERIAL

Purchasing Specifications, which invoke the ASME and/or ASTM specifications, as appropriate. Destructive tests on the coupons of the raw materials are carried out to conform that their *critical characteristics* (such as yield strength, tensile strength, elongation, and Charpy impact strength) meet the values specified in the Specification. The so-called Certified Material Test Reports (CMTRs) become a part of the permanent documentation on the manufactured cask. The manufacturing in the factory is subject to non-destructive testing, as required by the Manufacturing Drawings and Shop Traveler. As required by the ASME Code (Section III Subject NB), all containment boundary welds are subject to 100% radiography or ultrasonic testing. To avoid completion of multi-pass welds that fail 100% volumetric examination, intermediate inspections by liquid penetrant examination of weld passes are performed to ferret out unacceptable flaws or indications. ASME Section V provisions are used for NDE processes.

A detailed inspection of the HI-STAR 180 cask seal bearing surfaces is also performed. The Manufacturing Manual contains detailed instructions to ensure that the sealing surfaces are subjected to a rigorous examination by qualified inspectors per the drawing packaging in Section 1.3 and per the seal manufacturer recommendation.

The required examinations and applicable NDE procedures are embedded in the Shop Traveler with controls to ensure that all inspection activities occur in their prescribed sequence. A permanent record of all inspection activities is archived as part of the Documentation Package on the cask.

HOLTEC INTERNATIONAL COPYRIGHTED MATERIAL

THIS FIGURE IS HOLTEC PROPRIETARY IN ITS ENTIRETY

Figure 2.3.1: [PROPRIETARY TEXT REMOVED]

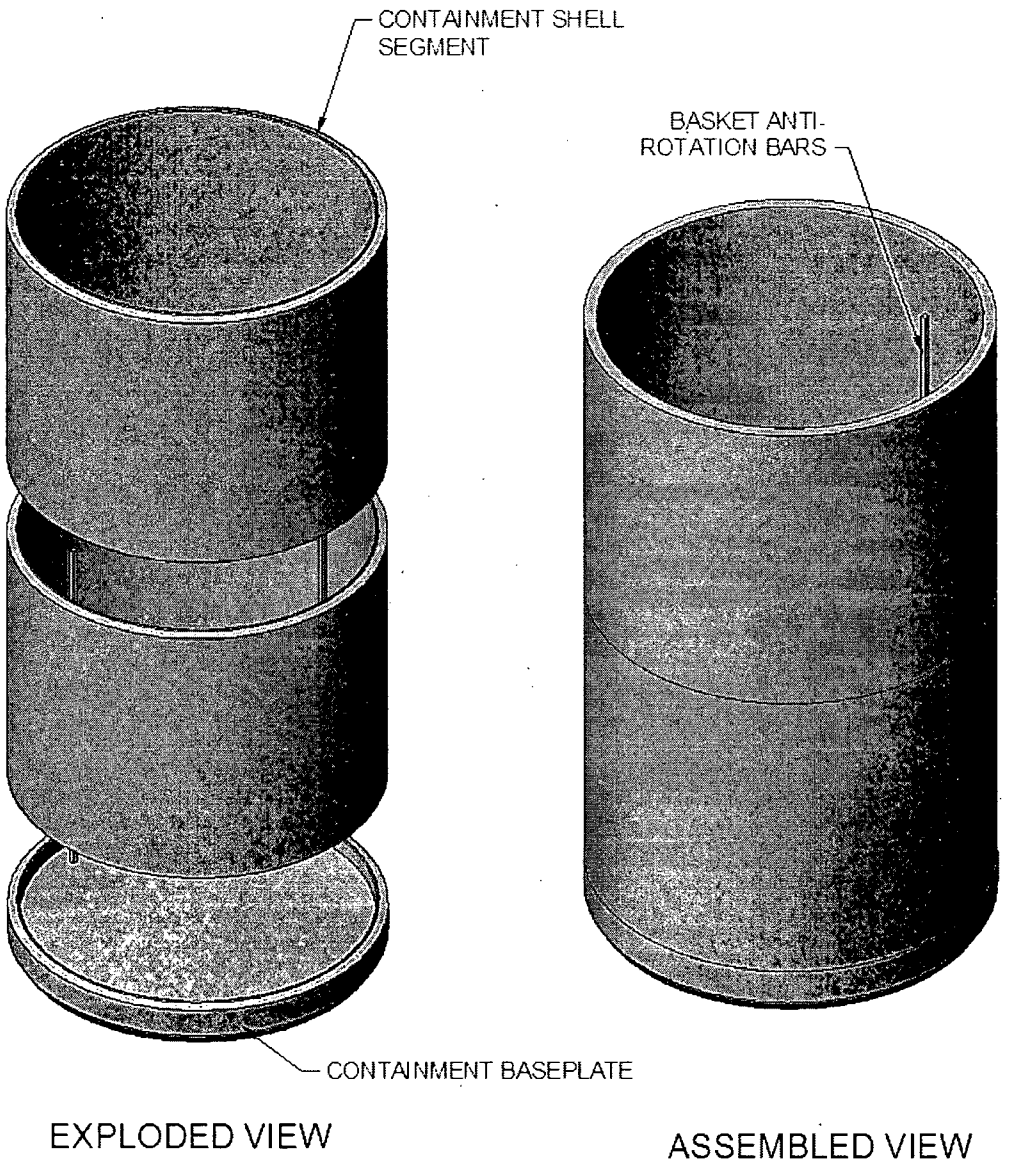

Note: The containment shell may be made from multiple pieces joined by longitudinal and circumferential welds

Figure 2.3.2: Containment Shell General Assembly

HOLTEC INTERNATIONAL COPYRIGHTED MATERIAL

THIS FIGURE IS HOLTEC PROPRIETARY IN ITS ENTIRETY

Figure 2.3.3: [PROPRIETARY TEXT REMOVED]

HOLTEC INTERNATIONAL COPYRIGHTED MATERIAL

THIS FIGURE IS HOLTEC PROPRIETARY IN ITS ENTIRETY

Figure 2.3.4: [PROPRIETARY TEXT REMOVED]

HOLTEC INTERNATIONAL COPYRIGHTED MATERIAL

THIS FIGURE IS HOLTEC PROPRIETARY IN ITS ENTIRETY

Figure 2.3.5: [PROPRIETARY TEXT REMOVED]

HOLTEC INTERNATIONAL COPYRIGHTED MATERIAL

THIS FIGURE IS HOLTEC PROPRIETARY IN ITS ENTIRETY

Figure 2.3.6: [PROPRIETARY TEXT REMOVED]

HOLTEC INTERNATIONAL COPYRIGHTED MATERIAL

THIS FIGURE IS HOLTEC PROPRIETARY IN ITS ENTIRETY

Figure 2.3.7: [PROPRIETARY TEXT REMOVED]

HOLTEC INTERNATIONAL COPYRIGHTED MATERIAL

THIS FIGURE IS HOLTEC PROPRIETARY IN ITS ENTIRETY

Figure 2.3.8: [PROPRIETARY TEXT REMOVED]

HOLTEC INTERNATIONAL COPYRIGHTED MATERIAL

THIS FIGURE IS HOLTEC PROPRIETARY IN ITS ENTIRETY

Figure 2.3.9: [PROPRIETARY TEXT REMOVED]

HOLTEC INTERNATIONAL COPYRIGHTED MATERIAL

THIS FIGURE IS HOLTEC PROPRIETARY IN ITS ENTIRETY

Figure 2.3.10: [PROPRIETARY TEXT REMOVED]

HOLTEC INTERNATIONAL COPYRIGHTED MATERIAL

THIS FIGURE IS HOLTEC PROPRIETARY IN ITS ENTIRETY

Figure 2.3.11: [PROPRIETARY TEXT REMOVED]

HOLTEC INTERNATIONAL COPYRIGHTED MATERIAL

2.4 GENERAL REQUIREMENTS

The compliance of the HI-STAR 180 Packaging to the general standards for all packaging, specified in 10CFR71.43, is demonstrated in the following subsections.

2.4.1 Minimum Package Size

As can be seen from the external dimensions of the packaging, in Section 1.3, the HI-STAR 180 Packaging meets the requirements of 10CFR71.43(a).

2.4.2 Tamper-Indicating Feature

During transport operations, a cover is installed over the access tube above one of the impact limiter attachment bolts as shown in the drawing package for the impact limiters in Section 1.3. A wire tamper-indicating seal with a stamped identifier is attached to hold the cover in place to indicate possible tampering with the upper impact limiter. The upper impact limiter must be removed to gain access to the closure lid bolting and the radioactive contents; thus, the absence of tampering is an indication that the radioactive contents of the package have not been accessed. This tamper seal satisfies the requirements of 10CFR71.43(b).

As shown in the drawing package for the cask in Section 1.3, the cask closure lid bolts may include holes for installation of wire tamper-indicating seals (security seals). The use of the security seals on the cask closure lid bolts is specified by the user or may be mandated by the authority designated to enforce and inspect such security features.

2.4.3 Positive Closure

There are no quick-connect/disconnect valves in the containment boundary of the HI-STAR 180 Packaging. [PROPRIETARY TEXT REMOVED]

HOLTEC INTERNATIONAL COPYRIGHTED MATERIAL

2.5 LIFTING AND TIE-DOWN STANDARDS

2.5.1 Lifting Devices

Per Reg. Guide 7.9, this subsection presents analyses for all lifting operations applicable to the transport of a HI-STAR 180 package to demonstrate compliance with requirements of paragraph 71.45(a) of 10CFR71.

The HI-STAR 180 Package has the following types of lifting devices: two lifting trunnions located on the cask top flange and threaded holes on each closure lid that serve as attachment locations to lift the cask closure lids. The drawing package in Section 1.3 shows the location of the Lifting Trunnions.

The evaluation of the adequacy of the lifting devices entails careful consideration of the applied loading and associated stress limits. The load combination D+H, where H is the "handling load", is the generic case for all lifting adequacy assessments. The term D denotes the dead load. Quite obviously, D must be taken as the bounding value of the dead load of the component being lifted. Table 2.1.11 provides package component weights. In all lifting analyses considered in this document, the handling load H is assumed to be equal to 0.15D. In other words, the inertia amplifier during the lifting operation is assumed to be equal to 0.15g. This value is consistent with the guidelines of the Crane Manufacturer's Association of America (CMAA), Specification No. 70, 1988 [2.5.5], Section 3.3, which stipulates a dynamic factor equal to 0.15 for slowly executed lifts. Thus, the "apparent dead load" of the component for stress analysis purposes is $D^* = 1.15D$. Unless otherwise stated, all lifting analyses in this chapter use the "apparent dead load", D^*, in the lifting analysis.

For use as part of a transportation package, the lifting trunnions that are a part of the HI-STAR 180 package are designed to meet the requirements of 10CFR71.45(a) and Regulatory Guide 1617 [2.1.11]. The lifting trunnions are required to maintain a safety factor of 3 based on trunnion material yield strength. The lifting attachments that are part of the HI-STAR 180 package also meet the design provisions of NUREG 1536 [2.5.6] and NUREG-0612 [2.1.5], which specify higher safety factors of 6 on yield strength and 10 on ultimate strength to ensure safe handling of heavy loads in critical regions within nuclear power plants. Satisfying the more conservative design requirements of NUREG-0612 ensures that the design requirements of 10CFR71.45(a) are met.

Unless explicitly stated otherwise, all stress results for lifting devices are presented in dimensionless form, as safety factors, defined as SF, where:

SF = (Allowable Stress Intensity in the Region Considered)/(Computed Maximum Stress Intensity in the Region)

It should be emphasized that in the results for the trunnion stress levels, the safety factor, SF represents the additional margin that is over and beyond the margin built into NUREG 0612 (e.g., a factor of 10 on ultimate strength or 6 on yield strength).

HOLTEC INTERNATIONAL COPYRIGHTED MATERIAL

2.5.1.1 Cask Trunnion Analysis

The lifting trunnion for the HI-STAR 180 cask is presented in the drawing package provided in Section 1.3. The two lifting trunnions for HI-STAR 180 are circumferentially spaced at 180-degrees. The trunnions are designed for a two-point lift and are sized to satisfy the aforementioned NUREG-0612 criteria. The trunnion material is identified in the drawing package shown in Section 1.3, which also specifies the trunnion threaded connection details in a note. There are also two (optional) trunnions at the base of the cask. These trunnions may be used as rotation supports when changing package orientation from vertical to horizontal (or vice- versa), or may be used to support 50% of the loaded cask when it is carried in a horizontal orientation. In the former case, the lower trunnions may support 100% of the load but they are not acting as lifting trunnions so the requirements of a safety factor of 3 on yield strength need not be satisfied. In the latter case, the lower trunnions are acting as lifting trunnions, but the maximum lifted load is 50% of the total load.

The embedded trunnion is analyzed as a cantilever beam subjected to a line load applied at the outer edge of the trunnion (see Figure 2.5.1). This assumption is clearly very conservative because the moment arm of the load has been maximized. In reality the loading is distributed over the exposed surface of the trunnion with the resultant acting closer to the root of the cantilever than the mid-span location. A Strength of Materials methodology (classical beam theory) is used to represent the trunnion as a cantilever beam with a solid circular cross section. The bending moment and shear force at the root of the trunnion cantilever is compared against allowable values based on either yield or ultimate strength. The threaded region between the trunnion and the surrounding forging material is also evaluated to demonstrate satisfaction of ASME Level A stress limits. Calculations demonstrate (Holtec Proprietary Report [2.1.12]) that the stresses in the upper and lower trunnions, computed in the manner of the foregoing, comply with requirements of paragraph 71.45(a) of 10CFR71 and also satisfy NUREG-0612 strength limits.

Key results are presented in Table 2.5.1 where it is shown that all safety factors meet the requirements for the trunnions as an ANSI N14.6-compliant handling appurtenance.

2.5.1.2 Cask Closure Lids and Baseplate During Lifting

2.5.1.2.1 Closure Lid Lifting Holes

The closure lids contain tapped lifting holes used to move the lids over and onto the closure flange of the cask. Since the cask contains fuel during this movement, the tapped lifting holes in the closure lids are sized so that adequate thread strength and engagement length exist using allowable stresses in accordance with NUREG-0612 requirements (which are more severe than 10CFR71.45(a) requirements). The method of analysis is based on an industry standard approach to determine the capacity of a threaded connection.

Minimum safety factors are computed in the Holtec Proprietary Report [2.1.12], and are summarized in Table 2.5.2.

HOLTEC INTERNATIONAL COPYRIGHTED MATERIAL

2.5.1.2.2 Baseplate

During lifting of a loaded HI-STAR 180 the containment baseplate is subject to amplified dead load, D* from the spent fuel, from the fuel basket, from the fuel basket supports, from the self-weight of the baseplate and any attached shielding, and from internal pressure. [PROPRIETARY TEXT REMOVED] To analyze this condition, the baseplate and a portion of the containment shell is modeled using the ANSYS finite element code [2.5.2] and a static analysis performed. The lid is included in the model, but the bolted connection is not modeled. The load case applies the loads from the fuel, the fuel basket, the fuel basket supports, [PROPRIETARY TEXT REMOVED] and the self-weight to the baseplate. Internal pressure is not included since the operating pressure is below atmospheric, so neglect of this pressure gives a conservative result for the baseplate stress intensity distribution. In this load case, the 15% amplifier is applied, the fuel load and [PROPRIETARY TEXT REMOVED] are modeled as a uniform pressure on the baseplate, and the fuel basket and fuel basket supports are modeled as pressure loadings on an annulus adjacent to the outer edge of the baseplate. Figure 2.5.2 shows the model and applied loads. The distribution of temperature on the containment boundary is also shown in the figure.

Details of the evaluation and locations of maximum stress intensity are provided in the calculation package [2.1.12]. The calculation package contains additional plots of the stress distribution in the containment shell and baseplate. The results from the analysis of the top-end lift, subject to Level A service load conditions, are summarized in Table 2.5.3, where the minimum safety factors for components in the load path are computed using the ASME Level A allowable stress intensities from Table 2.1.2.

2.5.1.3 Failure of Lifting Devices

10CFR71.45 also requires that the lifting attachments permanently attached to the cask be designed in a manner such that a structural failure during lifting will not impair the ability of the transportation package to meet other requirements of Part 10CFR71. The ultimate load carrying capacity of the lifting trunnions is governed by the cross section of the trunnion external to the cask rather than by any section within the cask. Loss of the external shank of the lifting trunnion will not cause loss of any other structural or shielding function of the HI-STAR 180 cask; therefore, the requirement imposed by 10CFR71.45(a) is satisfied.

2.5.2 Tie-Down Devices

There are no tie-down devices that are a structural part of the package. Therefore, 10CFR71.45(b) is not applicable to the HI-STAR 180 Package.

The saddle supports under the cask, the straps, and the front and rear end structures that resist longitudinal load are not part of the HI-STAR 180 package. The loads used to design these components are determined using the load amplifiers given by the American Association of Railroads (AAR) Field Manual, Rule 88 [2.5.4].

HOLTEC INTERNATIONAL COPYRIGHTED MATERIAL

2.5.3 Safety Evaluation of Lifting and Tie-Down Devices

Lifting devices have been considered in Subsection 2.5.1 and tie-down devices have been considered in Subsection 2.5.2. It is shown that requirements of 10CFR71.45(a)(lifting devices) and 10CFR71.45(b)(tie-down devices) are satisfied. All safety factors exceed 1.0.

No tie-down device is a permanent part of the cask. All tie-down devices (saddle, tie-down straps, etc.) are part of the transport conveyance and accordingly are not designed in this SAR.

Table 2.5.1: Key Safety Factors for HI-STAR 180 Trunnions

Item	Calculated Value	Safety Factor
Upper Trunnions		
Bending stress (Comparison with Yield Strength in Tension) (ksi)	16.475	7.88
Shear stress (Comparison with Yield Strength in Shear) (ksi)	3.760	20.71
Bearing Stress on Top Forging (Comparison with Yield Strength in Compression) (ksi)	2.778	12.05
Shear Stress in Threaded Region of Top Forging (Compared with Yield Strength in Shear)(ksi)	3.217	22.58
Bending Moment (Comparison with Ultimate Moment) (kip-in)	981	15.97
Shear Force (Comparison with Ultimate Shear Force) (kip)	159	32.98
Lower Trunnions		
Bending stress (Comparison with Yield Stress) (ksi)	18.335	7.08
Shear stress (Comparison with Yield Strength in Shear) (ksi)	3.911	19.91
Bearing Stress on Bottom Forging (Comparison with Yield Strength in Compression) (ksi)	2.497	13.40
Shear Stress in Threaded Region of Bottom Forging (Compared with Yield Strength in Shear)(ksi)	2.977	6.75
Bending Moment (Comparison with Ultimate Moment) (kip-in)	450	14.35
Shear Force (Comparison with Ultimate Shear Force) (kip)	91.425	31.7

HOLTEC INTERNATIONAL COPYRIGHTED MATERIAL

Table 2.5.2: Key Safety Factors for HI-STAR 180 Closure Lid Lifting Holes

Item	Value, kg (lb.)	Capacity, kg (lb.)	Minimum Safety Factor
Inner Closure Lid Direct Load	8,744 (19,260)	30,550 (67,290)	3.49

Note: Safety Factor in this table represents the margin above the mandated value of 3 on yield strength and 5 on ultimate strength per ANSI N14.6 [2.5.1].

Table 2.5.3: Top End Lift – Safety Factors

Item	Value- MPa (ksi)	Allowable- MPa (ksi)	Safety Factor
Containment Shell	< 20.68 (3.0)	143.8 (20.85)	> 6.95
Baseplate (Center)	< 58.6 (8.5)	215.6 (31.27)	> 3.68
Baseplate (Joint with Shell)	< 58.6 (8.5)	215.6 (31.27)	> 3.68

Note: This table is constructed from an analysis with zero internal pressure, simulating a case where the internal pressure is less than atmospheric.

2.6 NORMAL CONDITIONS OF TRANSPORT

In this section, the HI-STAR 180 package, consisting of the cask and the AL-STAR impact limiter, when subjected to the normal conditions of transport specified in 10CFR71.71, is shown to meet the design criteria in Subsection 2.1.2 (which are derived from the stipulations in 10CFR71.43 and 10CFR71.51). The vehicle utilized for the stress/deformation analysis is a comprehensive 3-D finite element simulation of the package on Q.A.-validated codes (see Appendix 2.A). 3-D finite element models of the cask, the fuel basket, and the two impact limiters have been prepared and assembled into a complete system to evaluate all of the Normal and Accident Conditions of Transport that involve an impact event. The stress analysis of the cask containment boundary is carried out using a 3-D finite element model or a simplified plate-and-shell theory solution, as appropriate. The stress intensity limits applicable to the containment boundary, as summarized below, are the central focus of the required qualifications.

i. The containment boundary must meet ASME Code Level A stress intensity limits under the design internal pressure and under operating internal pressure plus temperature appropriate to the normal condition of transport. For conservatism, only the containment boundary is considered, i.e., the strengthening effect of the Dose Blocker parts that girdle the containment shell is neglected.

ii. The containment boundary must also meet the same Level A stress limits when subject to a 0.3-meter side drop with impact limiters in place. For this dynamic analysis, the entire package is modeled and a comprehensive 3-D finite element simulation of the package drop performed using a public domain, QA validated computer code (Appendix 2.A). For this purpose, 3-D finite element models of the cask, the fuel basket, and the two AL-STAR impact limiters have been prepared.

The simulation of the package drop event is carried out using the numerical dynamics approach implemented on LS-DYNA, which is benchmarked against scale model test data (Appendix 2.B).

As discussed in Appendix 2.B, the AL-STAR impact limiter was subjected to a series of "9-meter drop tests" on quarter-scale models during the licensing of HI-STAR 100 in the late 90's. The scale model was of the type A-4 in the parlance of Reference [2.7.11]. The quarter-scale drop test results were correlated with a classical contact mechanics-based simulation model to predict the HI-STAR 100 Package's response under *any* drop orientation [2.2.2, 2.7.9]. The test data and the analytical correlation model provided the basis of NRC's transport certification of the HI-STAR 100 package in the late 90s (Docket # 71-9261).

The scale model test data from the H-STAR 100 certification effort has been used to develop an LS-DYNA-based dynamic simulation model to prognosticate the response of the AL-STAR impact limiter. As discussed in Appendix 2.B, the LS-DYNA model simulates the scale model crush tests with acceptable accuracy. Because of the benchmarked LS-DYNA model, it has been possible to simulate a far greater number of drop scenarios than could be done by physical testing. Equally important, the LS-DYNA solution provides insights into the crush phenomena, such as margin to

failure, which was only crudely inferable from scale model physical tests.

[PROPRIETARY TEXT REMOVED]

Examination of the geometry of the impact limiters for the different cask models shows that a major improvement in the HI-STAR 180 impact limiter design has been in the configuring of the internal backbone structure; the use of shaped internal gussets has been replaced by a series of identical radial ribs to provide a more robust internal structure with a clearly defined and identifiable load path.

[PROPRIETARY TEXT REMOVED]

The finite element models of the cask and the fuel basket are further described in Section 2.7.1 and have the following essential attributes:

- The finite element models of the cask and the fuel basket are implemented in ANSYS [2.5.2] and LS-DYNA [2.5.3], the former is used for static stress analysis purposes and the latter to prognosticate impact and crush response of the package. These two finite element codes are well established and are in wide use in the nuclear industry. The two codes have been validated for use at Holtec in accordance with Holtec's approved QA program. Appendix 2A describes the codes.

- The finite element discretization of the cask is sufficiently detailed to accurately articulate the primary membrane and bending stresses as well as secondary stresses at locations of gross structural discontinuity.

- Special emphasis is placed on a detailed modeling of the bolted joints; for example, each closure bolt is explicitly modeled and the gasket bearing and metal-to-metal contact interfaces are discretized in sufficient detail to capture the effect of deflections and rotations during the impact events on the seal-worthiness of the bolted joints.

- The finite element model is subjected to the *permanent loads* discussed in Section 2.1.2.1 (viz. the bolt pre-load). Interference fit self-limiting loads are conservatively neglected since they will strengthen the containment boundary during normal loading. The cask finite element model with a state of pre-stress from bolt preload is the starting point for all subsequent load analyses.

- All materials are represented by their bounding non-linear elastic-plastic true stress-strain relationships. Thus, the deformation of the fuel basket and the constituent parts of the cask under the various loadings is predicted with reliable accuracy.

- Mechanical and thermal property values of the materials used are those from robust sources (such as the ASME Code), as compiled in Chapters 2 and 3, respectively. The representative finite element models for the cask, fuel basket, and impact limiters are presented in detail in

in Ref. [2.6.1].

The finite element model for the impact limiter for implementation on LS-DYNA is similar to the impact limiter used on the benchmarked HI-STAR 100 model [2.7.4] in that it has a crushable region that is backed by a steel backbone structure. However, the steel backbone geometry of the impact limiter, including the buttress plate, has a different geometry in the HI-STAR 180 reflecting a more efficient utilization of structural material. [PROPRIETARY TEXT REMOVED]

Section 2.7.1 contains a detailed discussion of the methodology and modeling associated with the package drop analyses. Analysis results germane to establish regulatory compliance are summarized in tabular form in this SAR. Details of the model input data and results can be perused in the Calculation Package [2.6.1].

2.6.1 Heat

This subsection, labeled "Heat", in the format of Regulatory Guide 7.9, contains information on all structural (including thermoelastic) analyses performed on the cask to demonstrate positive safety margins, except for lifting operations that are covered in Section 2.5. Accordingly, this subsection contains all necessary information on the applied loadings, differential thermal expansion considerations, stress analysis models, and results for all normal conditions of transport. Assessment of compliance under "Cold" conditions is presented in Subsection 2.6.2.

The thermal evaluation of the HI-STAR 180 package is reported in Chapter 3, wherein the material temperatures that are needed for the structural evaluations are discussed.

2.6.1.1 Summary of Pressures and Temperatures

Table 2.6.2 summarizes values for pressure and temperatures (based on the thermal analysis in Chapter 3) that are used as inputs, as necessary, for the analyses undertaken to structurally qualify the HI-STAR 180 under Normal (Hot) Conditions of Transport.

2.6.1.2 Differential Thermal Expansion

The effect of thermal expansion is closely related to the presence and consideration of gaps in the package, hence both thermal expansion and gaps are discussed together in this subsection.

The appropriate thermal solutions for the HI-STAR 180 fuel baskets, the fuel basket supports, and the cask are discussed in Chapter 3, for the Normal Conditions of Transport under hot conditions. Conservative estimates of free thermal expansion of the components in the HI-STAR 180 package are obtained using the computed temperatures, together with conservatively chosen coefficients of thermal expansion, and the calculations and results are documented in the thermal calculation package referenced in Subsection 3.4.4. Table 3.4.2 documents the radial and axial expansions prior to and after heat-up.

To provide for sufficient clearance during insertion of basket and assemblies, and to account for thermal expansion, carefully calibrated gaps are incorporated in the design between the various components of the package, i.e., the cask body, basket and assemblies. These gaps are small compared to other characteristic dimensions such as the cask diameter, or the crush depth of the impact limiters. Hence they are not expected to have a significant effect on the overall dynamic behavior of the package during transient events (drop conditions). However, during such events, those gaps can result in internal impacts, resulting in additional loads on the individual components involved. In the HI-STAR 180, there are four locations of such engineered gaps. These are:

i. Axial gap between the fuel assembly and the containment cavity, either at the top (towards the inner closure lid) or the bottom (towards the containment baseplate).
ii. Axial gap between the fuel basket and the containment cavity, again either at the top or the bottom.
iii. Lateral gap between the fuel assembly and the storage cells.
iv. Small gap between the fuel basket and the basket shims.

As heuristic reasoning would suggest, increased internal gaps would produce increased impact loads during impact events due to the rebound of the unfixed masses (fuel assemblies and/or basket) from their support surfaces during the package's free fall. For example, an elastic surface such as the baseplate or lid of the cask supports the weight of the fuel by flexural action when the cask is in a vertical orientation prior to the initiation of the drop event. As soon as the free fall begins, the "flexural spring" would begin to relieve its strain energy, resulting in the presence of a possible gap between the fuel assembly and the baseplate or lid surface at the moment of impact. The extent of separation depends on the flexibility of the support surface and weight of the supported mass. Scoping calculations show that the extent of separation between the fuel assembly and the cask and basket surfaces are rather minute at the instant of impact in any impact event. However, for conservatism, the initial gap is assumed to be at its *maximum geometrically feasible* value in any drop orientation. This is an evidently counterfactual assumption made to maximize the computed severity of the impact events.

[PROPRIETARY TEXT REMOVED]

In summary, under Normal Hot Conditions of Transport, the HI-STAR 180 package internals are not subject to restraint of free thermal expansion [PROPRIETARY TEXT REMOVED]. Therefore, subsequent buckling or significant fuel basket deformation due to differential thermal expansions that can afflict a transport package with heat producing contents is not credible for the HI-STAR 180 package. [PROPRIETARY TEXT REMOVED] The drop analyses presented in Section 2.7 assume conservatively the maximum gaps present under cold conditions.

2.6.1.3 Stress Calculations

In this subsection, the structural analysis of the package under the conditions of design pressure, normal operating pressure and temperature, together with the effects of bolt preload

[PROPRIETARY TEXT REMOVED]. Also considered is the calculation of expenditure of fatigue life (usage factor) of the Containment Boundary parts under the above loads.

2.6.1.3.1 Structural Evaluation of the Package Subject to Pressure, Temperature, Bolt Preload – Normal Operating Condition and 1-foot Free Drop

The Package is analyzed for the Load Combinations N1 and N2 listed in Subsection 2.1.2 using the finite element codes ANSYS [2.5.2] and LS-DYNA [2.5.3], and the models described in Subsection 2.7.1 and in the Holtec Proprietary calculation packages [2.1.12] and [2.6.1]. For the simulation of the normal operating condition (Load Combination N1 consisting of design pressure and temperature), the package orientation is not significant. For the 1-foot free drop condition (Load Combination N2), the package is oriented at a 0-degree angle with respect to the horizontal rigid target, and the package has an initial downward vertical velocity given by

$V = \sqrt{2gH}$ H = 12 inches (0.3 meters)

so that V = 96.3 inch/sec. (37.9 cm/sec.)

The drop of the package is simulated on LS-DYNA with full representation of elastic-plastic response as discussed in Subsection 2.7.1. The details of the material models and contact surface definitions are documented in the Holtec Proprietary calculation package for the finite element analyses [2.6.1]. This same finite element model is used for both the normal condition of transport (Load Combination N2) and the Hypothetical Conditions of Transport drop as well as puncture analyses reported in Section 2.7.

Results from the analysis of the one-foot drop case (Load Combination N2) are documented in the Holtec Proprietary finite element analysis calculation package [2.6.1]. A discussion of the analysis of the 1 foot drop event and key safety factors are reported in Subsection 2.6.1.4 below.

2.6.1.3.2 Fatigue Considerations

Regulatory Guide 7.9 [2.6.3] suggests consideration of fatigue due to cyclic loading under normal conditions of transport. Considerations of fatigue of individual components of the package, associated with long-term exposure to vibratory motion during normal conditions of transport, are presented below:

- Cask Fatigue Considerations

As shown in the following, the cask in the HI-STAR 180 Package does not require a detailed fatigue analysis because all applicable cyclic loadings are well within the range that permits exemption from fatigue analysis per the provisions of Section III of the ASME Code. Paragraph NB-3222.4 (d) of Section III of the ASME Code provides five criteria that are strictly material and design condition dependent to determine whether a component can be exempted from a detailed fatigue analysis. The sixth criterion is applicable only when dissimilar materials are involved, which is not the case in the HI-STAR cask (the steel monolithic shield and the steel containment shell have essentially the same

thermal expansion properties and the same Young's Modulus).

The Design Fatigue curves for the cask materials are given in Appendix I of Section III of the ASME Code. Each of the five criteria is considered in the following:

i. Atmospheric to Service Pressure Cycle

The number of permissible cycles, n, is bounded by $f(3S_m)$, where f(x) means the number of cycles from the appropriate fatigue curve at stress amplitude of "x" psi. In other words

$$n < f(3S_m)$$

From Tables 2.1.4 and 2.1.6 for normal conditions, and from the fatigue curve in ASME Code Appendix I, the number of permissible cycles for the containment boundary is

$$n \text{ (cask)} \leq 1{,}600 \ (3S_m = 64{,}200 \text{ psi}) \text{ (Figure I-9.1 of ASME Appendix I)}$$

Since 1,000 pressurizations in the 40-year life of the cask is an upper bound estimate, it is concluded that projected pressurizations of the HI-STAR 180 components do not warrant a usage factor evaluation.

ii. Normal Service Pressure Fluctuation

Fluctuations in the service pressure during normal operation of a component are considered if the total pressure excursion δ_p exceeds Δ_p.

where

$\Delta_p =$ Design pressure * $S/(3S_m)$

$S =$ Value of S_a for one million cycles.

Using the above mentioned tables and appropriate fatigue curves,

$$(\Delta_p)_{overpack} = \frac{(80)(12{,}500)}{(3)(21{,}400)} = 15.6 \ psi \ (0.108 \text{ MPa})$$

During normal operation the pressure field in the cask is steady state. Therefore, pressure fluctuations during normal operation are negligibly small and nowhere approach the limit computed. Therefore, normal service pressure oscillations do not warrant a fatigue usage factor evaluation.

iii. Temperature Difference - Startup and Shutdown

Fatigue analysis is not required if the temperature difference ΔT between any two adjacent points on the component during normal service does not exceed $S_a/2E\alpha$, where S_a is the cyclic stress amplitude for the specified number of startup and shutdown cycles. E and α are the Young's Modulus and instantaneous coefficients of thermal expansion (at the service temperature). Assuming 1,000 startup and shutdown cycles, Table 2.2.1 (conservatively assuming a service temperature of 400°F) and the appropriate ASME fatigue curve in Appendix I of Section III of the ASME Code give:

$$(\Delta T)_{overpack} = \frac{83{,}000}{(2)(26.2)(7.1)} = 223.1°F\ (123.9°C)$$

There are no locations on the cask where ΔT between any two adjacent points approaches this value. Therefore, it is evident that this temperature criterion is satisfied for 1,000 startup and shutdown cycles.

iv. Temperature Difference - Normal Service

Significant temperature fluctuations that require consideration in this criterion are those in which the range of temperature difference between any two adjacent points under normal service conditions is larger than $S/2E\alpha$ where S corresponds to 10^6 cycles. Substituting gives:

$$(\Delta T)_{overpack} = \frac{12{,}500}{(2)(26.2)(7.1)} = 33.6°F\ (18.7°C)$$

During normal operation, the temperature field in the cask is steady state. Therefore, normal temperature fluctuations are negligibly small. Therefore, normal temperature fluctuations do not warrant a fatigue usage factor evaluation.

v. Mechanical Loads

Mechanical loadings of appreciable cycling occur in the HI-STAR 180 Package only during transportation. The stress cycling under transportation conditions is considered significant if the stress intensity amplitude is greater than S_a corresponding to 10^6 cycles. It, therefore, follows that the stress intensity range that exempts the cask is 25,000 psi (172.4MPa).

Inertia loads typically associated with rail transport will produce stress intensity ranges in the cask that are a small fraction of the above limits. Therefore, the potential for large fatigue expenditure in the cask materials, under transportation conditions, is not credible.

In conclusion, the cask does not require fatigue evaluation under the exemption criteria of the ASME Code.

- Fatigue Analysis of Closure Bolts

The maximum tensile stress range, developed in the cask closure bolts during normal operating conditions, occurs during the preload operation. The maximum bolt stress is permitted to have the value $2S_m$ (Table 2.1.3). At a temperature of 350°F (177°C), Table 2.1.8 shows that the outer closure lid bolt material (SA-193 B7) may be pre-stressed to a value not to exceed 61.9 ksi (426.8MPa). The alternating stress intensity in the bolt is equal to 1/2 of the maximum stress intensity, or 30.95 ksi (213.4MPa). Per Table 2.2.2, the Young's Modulus at 350°F (177°C) is 28,250 ksi (194,800 MPa). Therefore, incorporating a fatigue strength reduction factor of 4, the effective stress intensity amplitude for calculating usage factor using Figure I-9.4 (ASME Code, Section III Appendices) is (ratioing the modulus used in the figure to the modulus used here):

$$S_a = \frac{(30.95)(4)(30e+06)}{28.25e+06}$$
$$= 131.5 \text{ ksi} = 906.7 MPa$$

Using Figure I-9.4 (NB, loc. cit), the permissible number of cycles is 588; this sets a limit on the number of permitted loadings of a set of outer closure lid bolts.

For the inner closure lid bolt material (SA-564 630 (H1025)), the value of S_m at 350°F (177°C) is 47.65 ksi (328.6 MPa) per Table 2.1.8, and the Young's modulus is 26,950 ksi (185,800 MPa). Therefore, the effective stress amplitude for calculating the usage factor is:

$$S_a = \frac{(47.65)(4)(30e+06)}{26.95e+06}$$
$$= 212.2 \text{ ksi} = 1463 MPa$$

Using Figure I-9.4 (NB, loc. cit), the permissible number of cycles is 225; this sets a limit on the number of permitted loadings of a set of inner closure lid bolts.

- Fatigue Considerations for the Containment Closure Flange Internal Closure Bolt Threads

Fatigue of the threads in the containment closure flange is also evaluated. Based on the nominal diameter and the thread engagement length, the total shear area of the cask closure bolt threads can be computed. The maximum shear stress on the threaded area of the flange is calculated using 94 ksi as the maximum allowable bolt pre-stress and a tensile area conservatively computed using the nominal bolt diameter. The resulting shear stress is:

$$\tau = 15.51 \text{ ksi } (106.9 \text{ MPa})$$

The primary membrane stress intensity in the closure flange threads is equal to twice the maximum shear stress, and the alternating stress intensity in the threads, S_a, is equal to 1/2 of the total stress.

Conservatively, using the cask design temperature (per Table 3.2.10), the Young's Modulus (Table 2.2.1) is 26,200 ksi (180,600 MPa).

The effective stress amplitude accounting for the fatigue strength reduction and Young's Modulus effects is given by

$$S_a = \frac{(15.51)(4)(30)}{26.2} = 71.04\,\text{ksi} \qquad (489.8\text{MPa})$$

Using Figure I-9.1 (of NB, loc. cit), the allowable number of cycles is approximately equal to 1500.

Therefore, the *maximum service life of the closure flange threads is 1500 cycles* of torque and un-torque of the cask closure system.

- Satisfaction of Regulatory Guide 7.6 Commitment (Condition 7 on Cyclic Stress Intensity Range

The minimum alternating stress range, S_a, at 10 cycles from all appropriate fatigue curves is 580 ksi. Calculated stress intensities in the containment boundary under any of the analyses performed in this SAR under the required load combinations for Normal Conditions of Transport are less than the ultimate strength of the containment vessel material (70 ksi). Conservatively assuming a stress concentration of 4 regardless of specific location produces a stress intensity range below 4 x (70) = 280 ksi (< 580 ksi). Therefore, satisfaction of the Regulatory Guide 7.6 commitment on alternating stress intensity range is assured.

2.6.1.3.3 Stability of the Metamic Fuel Basket Plates

Under certain conditions, the fuel basket plates may be under direct compressive load. Although the finite element simulations can predict the onset of an instability and post-instability behavior, the computation in this subsection uses (the more conservative) classical instability formulations to demonstrate that an elastic instability of the basket plates is not credible.

[PROPRIETARY TEXT REMOVED]

2.6.1.3.4 Closure Lid Flanged Joint

The closure lid-to-flange joint in all HI-STAR family of casks is engineered to be a "controlled compression joint" (see Figure 2.6.1) widely used in the pressure vessel industry (see [2.7.7, Chapter 3, pp 144-51]). The inner closure lid joint in the HI-STAR 180 is of the "controlled compression type". The defining features of a controlled compression joint are:

i. The extent of the gasket's compression is controlled by the metal-to-metal contact between the flange and the lid inboard of the bolt circle. The surface where the contact occurs is referred to as the "land".

ii. There is a relief between the two surfaces outboard of the bolt circle.

[PROPRIETARY TEXT REMOVED]

In a controlled compression joint, the bolt pre-load B is equilibrated by the gasket "seating" force G and the contact force on the land C.

$$B = G + C \quad (1)$$

The eccentricity between the bolt load circle B and the reaction circles G and C produces a rotational moment which tends to rotate both the flange and the lid towards each other. The edge "relief" between the two surfaces must be sufficient to prevent edge-to-edge contact.

During the "operating" condition (in the terminology of the ASME Code), wherein an axial load (impact or pressure load), H_p, acts on the inside surface of the inner closure lid, the axial force equilibrium changes to

$$B' = G' + C' + H_p \quad (2)$$

It is shown in [2.7.7, Chapter 3, pp 104-151], that the bolt load $B' \cong B$, if no edge contact between the two bodies develops due to the added rotation of the two bodies due to increased offset between the opposing forces in the operating condition. (The "relief" must be sized to be large enough to prevent edge-to-edge contact .The design formulas in the ASME code for raised face flange design are predicated on assuming that $B = B'$)

Furthermore, because of the joint geometry, the gasket will begin to relax only after the contact load on the land vanishes (i.e., $C' = 0$). A key consideration in the design of the HI-STAR closure joints is to ensure that the bolt pre-load B is large enough to prevent C' from reaching zero and to ensure that there is sufficient relief outboard of the bolt circle to prevent the development of a contact reaction at the outer edge. If the above conditions are realized then the force equilibrium in the operating condition becomes

$$B = G + C' + H_p \quad (3)$$

Using Eq. (1) and (3), we have

$$C' = C - H_p$$

In other words the contact load at the "land" is reduced by the amount of the operating condition axial load.

Maintaining a positive C' means that the compression of the gasket will remain unchanged, and, therefore, the sealing state of the gaskets will not be impaired.

The analysis of the bolted joint using classical plate and shell theory methods described in [2.7.7, Chapters 3, 4, and 5] is now superseded in the state-of-the-art by a more rigorous simulation on a finite element code which enables each bolt to be individually modeled (in lieu of the simplifying assumption in the classical methods of an annular radially symmetric load). The finite element solution under the pre-load condition and the operating condition is surveyed for the following items of information:

i. Absence of an edge-to-edge contact load outboard of the bolt circle during the pre-load and the operating conditions.

ii. The bolt load in the pre-load condition undergoes a minor increase in the operating condition, and more importantly, the bolt axial stress remains below the limits specified in Table 2.6.3.

iii. The gasket interface does not open, i.e., no gasket relaxation.

If the above criteria are fully satisfied then there is an absolute assurance that the joint will not leak and the bolts will not stretch.

However, a transgression of the above criteria does not foretell a joint leakage. For the joint to leak, the gasket must relax (i.e., the joint must open by a sufficient amount) such that the pressure on the gasket drops to the point that it can no longer maintain the seal. Table 2.2.12 provides the minimum required springback of the gasket to ensure joint seal. Strictly speaking, leakage is likely to occur if the seal unloads beyond the minimum springback value provided in Table 2.2.12. Typically, this condition is realized if the bolts begin to yield in sufficient number to permit a joint opening.

The above information can be cast into a metric, m, which serves to provide a quantitative assessment of the margin against leakage, as summarized in Table 2.6.1.

[PROPRIETARY TEXT REMOVED]

The above criteria are used to determine the integrity of the bolted joint in the transport package in the wake of an impact event.

2.6.1.4 Comparison with Allowable Stresses

Following Regulatory Guide 7.9, calculated stress intensities in the containment component of the package from all analyses are compared with the allowable stress intensities defined in Section 2.1 (Tables 2.1.2 through 2.1.8) as applicable for conditions of normal transport. The results of these comparisons are presented in the form of factors of safety (SF) defined as:

$$SF = \frac{\text{Allowable Stress}}{\text{Calculated Stress}}$$

For convenience, those specific allowable strengths, loads, etc., that are used to develop the safety factors are summarized in Table 2.6.3. Data from Sections 2.1 and 2.2 are used to construct Table 2.6.3.

Safety factors associated components identified as lifting and tie-down devices have been presented in Section 2.5 as set forth by Regulatory Guide 7.9.

2.6.1.4.1 Results for Pressure Boundary Stress Intensity

Results from the finite element analyses for Load Combinations N1 and N2 are tabulated for normal heat conditions of transport in Holtec Proprietary calculation packages [2.1.12] and [2.6.1], respectively. For Load Combination N1, a static axi-symmetric finite element model is constructed using ANSYS [2.5.2] using layered solid elements to model the through-thickness behavior of the containment shell and the baseplate. The tabular results include contributions from mechanical and thermal loading and are needed to insure satisfaction of primary and primary plus secondary stress limits for normal conditions of transport. For the purpose of this calculation only, the closure lid-shell junction is modeled assuming a clamped connection in recognition that the large preload from the closure lid bolts, necessary to insure continued sealing during the drop events, will preclude relative rotations at the joint under the internal pressure (see Table 2.2.12). The analysis considers the combined effects of the design internal pressure in Table 2.1.1, the operating temperature distribution (Table 2.6.2), [PROPRIETARY TEXT REMOVED]. Figure 2.6.3 shows the axi-symmetric finite element model, and Figure 2.6.4 shows the graphical results, both reproduced from [2.1.12].

For Load Combination N2, a dynamic finite element model implemented in LS-DYNA [2.5.3] is used to determine the peak deceleration of the cask. Then a static stress analysis is performed in ANSYS based on the bounding cask deceleration β_{max}.

Results are evaluated against Level A stress intensity limits for locations in the containment shell, and in the baseplate, which together with the closure lids, make up the containment boundary [2.5.3]. The bolted connection of the lids to the closure flange is not modeled for Load Combination N1, as this solution is not meant to evaluate the sealing performance of the gaskets.

The key results for Load Combinations N1 and N2 are summarized wherein the minimum safety factor for different components of the cask for each of the load combinations is presented. All safety factors are conservatively computed using allowable stresses based on the maximum normal operating temperatures (see Tables 2.1.1 and Table 2.6.2, for component temperatures, and Table 2.1.6 for allowable stress intensity).

2.6.1.4.2 Result Summary for Normal Heat Condition for Transport

- Maximum Cask Deceleration from Load Combination N2

Table 2.6.4 lists the maximum cask deceleration calculated for the 0.3-meter side drop using the LS-

DYNA model. Table 2.6.4 also defines the bounding value for β_{max}, which is used as input for the static stress analysis.

- Stress Intensity Results from Overall Finite Element Analysis of the Cask

Table 2.6.5 is a summary table that includes primary and primary plus secondary stress intensity safety factors (per Table 2.1.2) for Load Combination N1 associated with the Normal (Heat) Conditions of Transport. Table 2.6.6 provides similar results for Load Combination N2. The tabular results demonstrate that all safety factors exceed 1.0 at the key locations for each component of the containment boundary.

- Status of Lid Bolts and Seals

[PROPRIETARY TEXT REMOVED]

Based on the results of the above analyses for normal heat conditions of transport, the following conclusions are reached.

i. No bolt overstress is indicated under any loading event associated with Normal Conditions of Transport. As expected, the tensile stress in the bolts remains essentially unchanged from its initial preload state for reasons discussed in Section 2.6.1.3.4.

ii. The closure lid seals do not unload under Load Combinations N1 and N2; therefore, the seals continue to perform their function under Normal Conditions of Transport.

- ASME Pressure Test Condition

Pressure testing of the HI-STAR 180 containment boundary is not required. The cask cavity and the inter-lid space MNOPs are below 5 psig; therefore, the provision of 10CFR71.85(b) does not apply. See Subsection 8.1.3.2 for additional specifications.

- Performance of Non-Containment Components of Package

The Holtec Proprietary calculation package documenting all of the finite element solutions [2.6.1] contains graphical visualizations of the stress intensity and deformation for every component in the HI-STORM 180 package. In particular, the fuel basket and the monolithic shield surrounding the containment shell are surveyed to evaluate their performance and compare with the acceptance criteria in Section 2.1. Table 2.6.7 summarizes the acceptance criteria for performance of the non-containment components of the HI-STAR 180. From Table 2.6.7, it is established that the surveyed components meet the acceptance requirements stated for Load Combination N2.

- Summary of Results for Normal Heat Conditions of Transport

HOLTEC INTERNATIONAL COPYRIGHTED MATERIAL

Tables 2.6.4 through 2.6.7 present a concise summary of safety factors and performance results for the HI-STAR 180 for the Normal Heat Condition of Transport.

Based on the results of all analyses, it is concluded that:

i. All safety factors reported in the text and in the summary tables are greater than 1.0.

ii. There is no buckling or plastic deformation distortion of the cask internals.

iii. All performance requirements are met for the non-containment components.

iv. The closure lid seals do not unload.

Therefore, the HI-STAR 180 Package, under the Normal Heat Conditions of Transport, has adequate structural integrity to satisfy the subcriticality, containment, shielding, and temperature requirements of 10CFR71.

2.6.2 Cold

The Normal Cold Condition of Transport assumes an ambient environmental temperature of -20°F (-29°C) and maximum decay heat. A special condition of extreme cold is also defined in Regulatory Guide 7.8 where the package and environmental temperature is at -40°F (-40°C) and the package is exposed to increased external pressure with minimum internal pressure. A discussion of the resistance to failure due to brittle fracture is provided in subsection 2.1.2.2.

The value of the ambient temperature has two principal effects on the HI-STAR 180 Package, namely:

i. The steady-state temperature of all material points in the cask will go up or down by the amount of change in the ambient temperature.

ii. As the ambient temperature drops, the absolute temperature of the contained helium will drop accordingly, producing a proportional reduction in the internal pressure in accordance with the Ideal Gas Law.

In other words, the temperature gradients in the cask under steady-state conditions will remain the same regardless of the value of the ambient temperature. The internal pressure, on the other hand, will decline with the lowering of the ambient temperature. Since the stresses under normal transport condition arise principally from pressure and thermal gradients, it follows that the stress field in the cask under a bounding "cold" ambient would be smaller than the "heat" condition of normal transport, treated in the preceding subsection.

In addition, allowable stresses generally increase with decreasing temperatures. Safety factors, therefore, will be greater for an analysis at cold temperatures than at hot temperatures. Therefore, the

safety factors reported for the hot conditions in Subsection 2.6.1 provide the limiting margins. However, since the bolt preloads may be altered by a change in the environmental temperature, the effect of bolt temperature changes on the level of preload, subsequent to the initial application of preload, must be considered and is evaluated in the Holtec Proprietary calculation package [2.1.12]. The methodology used is identical to that used for closure bolt analysis on the HI-STAR 100 Docket. Based on the change in modulus and coefficients of thermal expansion, the relative growth (or shrinkage) of a preloaded bolt connecting the lid to the flange is established by classical strength of materials procedure. The results from that calculation are summarized below:

Evaluation of Environmental Temperature Changes on the Level of Preload	
Item	**Value (ksi)**
Initial Bolt Prestress -Heat (Inner/Outer Lids)	76/55
% Change (Heat to Cold)	-1.0/+0.6

The computed change in stress due to the assumption of a severe local low temperature condition is insignificant compared to the initial bolt stress and to the change in the allowable bolt stress because of the lowered temperature. It is concluded that the small change in bolt preload stress will have an insignificant effect on structural calculations and therefore safety factors and sealing are essentially unaffected by the environmental change.

As no liquids are included in the HI-STAR 180 Package design, loads due to expansion of freezing liquids are not considered.

The effect of environmental and component temperature changes on the stress from the interference between the monolithic shield and the inner containment shell is now considered. Because the coefficients of thermal expansion of the outer monolithic shield and the inner shell are essentially the same, the change of the cask's thermal state will not produce any significant internal or interface stresses under steady state conditions.

2.6.2.1 Differential Thermal Expansion

The methodology to determine differential thermal expansion in the Normal Heat Condition of Transport is presented in Chapter 3. The same methodology is applied for the Normal Cold Condition of Transport, and results are summarized in Chapter 3.

It can be verified by referring to the drawing packages in Section 1.3 that the clearances between the fuel basket and cask inside surface are sufficient to preclude temperature induced interference in the cold condition.

[PROPRIETARY TEXT REMOVED]No further analysis is warranted for the cold condition since (a) the restraint of free thermal expansion is less under cold conditions and (b) material strength properties tend to be greater at lower temperatures, resulting in higher allowable stress limits.

It is concluded that the HI-STAR 180 package meets the requirement that there be no restraint of free thermal expansion, under Normal Cold Conditions of Transport, that would lead to primary stresses greater than the applicable ASME Level A limit.

2.6.3 Reduced External Pressure

The effects of a reduced external pressure equal to 25 kPa (3.5 psia) are bounded by results from the design internal pressure analysis for the cask (Load Combination N1). This case does not provide any bounding loads for other components of the cask containment boundary.

2.6.4 Increased External Pressure

The effect of an external pressure equal to 140 kPa (20 psia) on the package, which is stated in USNRC Regulatory Guide 7.8 [2.1.4], is bounded by the effect of the large value for the external pressure specified by 10CFR71.61 (2 MPa (290 psia)). Instability of the containment boundary shell, under this external pressure is examined in Section 2.7. Therefore, no additional analyses are performed herein to demonstrate package performance.

2.6.5 Vibration

During transport, vibratory motions occur which could cause low-level stress cycles in the package due to beam-like deformations. If any of the package components have natural frequencies in the flexible range (i.e., below 33 Hz), or near the flexible range, then resonance may amplify the low level input into a significant stress response. Strength of materials calculations are performed to establish that vibrations are not an issue in transport of the HI-STAR 180.

The lowest frequency of vibration during normal transport conditions may occur due to vibrations of a fuel basket cell wall. An analysis to determine the lowest frequency of vibration of the component has been performed. For this computation, the fuel basket plate (cell wall) is assumed to vibrate like a simply supported beam. Based on the plate mass density and the plate dimensions, the lowest natural frequency is well in the rigid range (see the Holtec Proprietary calculation package [2.1.12]).

When in a horizontal position, the cask is supported over a considerable length of the shield cylinder. Conservatively considering the HI-STAR as a supported beam at only the two ends of the shield cylinder, and assuming the total mass of the fuel basket and its contents moves with the cask, a computation of the lowest natural frequency of the structure during transport provides a result in the rigid range. (See calculation package [2.1.12]).

Based on these frequency calculations, it is concluded that vibration effects are inconsequential to the structural integrity of the cask.

2.6.6 Water Spray

HOLTEC INTERNATIONAL COPYRIGHTED MATERIAL

The condition is not applicable to the HI-STAR 180 Package per [2.1.3].

2.6.7 Free Drop

The structural analysis of a 0.3-meter (1-foot) free drop under the heat condition is documented in Subsection 2.6.1.4. As demonstrated in Subsection 2.6.1.4 safety factors are well over 1.0 (see Tables 2.6.4 and 2.6.6 for Load Combination N2). The discussion in subsection 2.6.2 demonstrates why the cold condition is not a bounding condition for the 0.3-meter (1-foot) free drop.

2.6.8 Corner Drop

This condition is not applicable to the HI-STAR 180 Package per [2.1.3].

2.6.9 Compression

This condition is not applicable to the HI-STAR 180 Package per [2.1.3].

2.6.10 Penetration

This condition is not applicable to the HI-STAR 180 Package per [2.1.3].

HOLTEC INTERNATIONAL COPYRIGHTED MATERIAL

Table 2.6.1: [PROPRIETARY TEXT REMOVED]

Table 2.6.2: Summary of Operating Pressure Difference and Bounding Average Metal Temperatures for Normal Condition of Transport ("Heat" Condition)

Location	Pressure kPa (psig) †	Temperature °C (°F)	Component Temperature Used in the Safety Factor Evaluation (°F)
Containment Shell (Top)	-33.8 (-4.9)	140 (284)	425
Containment Shell (Middle)	-33.8 (-4.9)	185 (365)	425
Containment Shell (Bottom)	-33.8 (-4.9)	140 (284)	425
Containment Baseplate	-33.8 (-4.9)	128 (262)	275
Inner Closure Lid	-33.8 (-4.9)	115 (239)	275
Outer Closure Lid	28.3 (4.1)	98 (208)	275
Containment Closure Flange	-	118 (244)	275
Bottom Ring Forging	-	110 (230)	275
Monolithic Shield Inner Surface	-	165 (329)	400
Monolithic Shield Outer Surface	-	115 (239)	400
Fuel Basket – Top (Outer Edges)	-	190 (374)	527
Fuel Basket – Middle (Outer Edges)	-	245 (473)	527
Fuel Basket – Base (Outer Edges)	-	215 (419)	527
Fuel Basket – Top (Center)	-	220 (428)	527
Fuel Basket – Middle (Center)	-	273 (523)	527
Fuel Basket – Base (Center)	-	245 (473)	527

Notes: † Negative pressure inside cask cavity.

Table 2.6.3: Allowable Stresses for Level A and Level D Conditions (Normal Condition of Transport)

ITEM	LEVEL A†	LEVEL D†	TEMPERATURE
Inner Closure Lid – Primary Bending Stress Intensity – MPa (ksi)	228.6 (33.2)	506.8 (73.5)	135°C (275 °F)
Outer Closure Lid – Primary Bending Stress Intensity – Mpa (ksi)	228.6 (33.2)	506.8 (73.5)	135°C (275 °F)
Containment Shell – Primary Membrane Stress Intensity – Mpa (ksi)	145.66 (21.125)	337.86 (49.0)	218°C (425 °F)
Containment Shell – Primary + Secondary Stress Intensity – Mpa (ksi)	436.97 (63.375)	NA	218°C (425 °F)
Baseplate – Primary Membrane + Bending Stress Intensity – Mpa (ksi)	230.98 (33.5)	506.78 (73.5)	135°C (275 °F)
Baseplate – Primary + Secondary Stress Intensity – Mpa (ksi)	461.28 (66.9)	NA	135°C (275 °F)
Inner Lid Bolts – Average Service Stress (Stress Intensity) – MPa (ksi)	666.0 (96.6)	895.11 (129.825)	135°C (275 °F)
Outer Lid Bolts – Average Service Stress (Stress Intensity) – MPa (ksi)	437.14 (63.4)	655.54 (95.075)	135°C (275 °F)
Inner Lid Bolts – Maximum Service Stress at Extreme Fiber (Stress Intensity) – MPa (ksi)	999.1 (144.9) ††	1068.7 (155.0)	135°C (275 °F)
Outer Lid Bolts – Maximum Service Stress at Extreme Fiber (Stress Intensity) – MPa (ksi)	655.54 (95.075) ††	861.88 (125.0)	135°C (275 °F)
Monolithic Shield Cylinder – Ultimate Strength – MPa (ksi)	NA	482.6 (70.0)	204.4°C (400 °F)

† Obtained from Section 2.1.
†† Lesser of 3Sm and S_y is used for conservatism.

HOLTEC INTERNATIONAL COPYRIGHTED MATERIAL

Table 2.6.4: Maximum Deceleration Under 0.3 Meter Free Drop Condition (Side Drop)

Method	α_{max} (g's)
Numerical (LS-DYNA) Solution	22.96*
The value of β_{max} for static analysis chosen to bound the above is 25 g's.	

*Upper Bound Crush Strength

HOLTEC INTERNATIONAL COPYRIGHTED MATERIAL

Table 2.6.5: Containment Boundary Stress Intensities and Safety Factors – Load Combination N1 (Static Analysis)

Location and Stress Intensity Component	Calculated Value
Inner Closure Lid – Primary Bending Stress Intensity – MPa (ksi)	29.82 (4.325) SF=7.23
Outer Closure Lid – Primary Bending Stress Intensity – MPa (ksi)	91.15 (13.22) SF=2.37
Containment Shell – Primary Membrane Stress Intensity – MPa (ksi)	19.67 (2.853) SF=7.31
Containment Shell – Primary + Secondary Stress Intensity – MPa (ksi)	86.58 (12.557) SF=4.98
Baseplate – Primary Membrane + Bending Stress Intensity at Center – MPa (ksi)	57.90 (8.398) SF=3.72
Baseplate – Primary + Secondary Bending Stress Intensity at Periphery – MPa (ksi)	SF > 4.98

Note: "SF" means Safety Factor.

Table 2.6.6: Results for 1-Ft Drop Static Analysis

Item	Allowable from Table 2.6.5 of [1]	Side Drop
Primary Membrane stress intensity in the containment shell – MPa (ksi)	145.66 (21.125)	52.26 (7.58) † SF = 2.79
Primary + Secondary stress intensity in the containment shell – MPa (ksi)	436.97 (63.375)	116.87 (16.95) SF = 3.74

Note: "SF" means the Safety Factor. † As an example, the stress distribution in the containment shell under 1-Ft side drop is shown in Figure 2.6.5.

Table 2.6.7: Key Performance Objectives for Non-Containment Components of the HI-STAR 180

Criterion	Load Combination N1	Load Combination N2
Stress Intensity in Monolithic Shield – Primary Stress Intensity Below Ultimate Strength	-	Yes
Fuel Basket Deformation – Global Average < 0.5mm	Yes	Yes

HOLTEC INTERNATIONAL COPYRIGHTED MATERIAL

Table 2.6.8: [PROPRIETARY TEXT REMOVED]

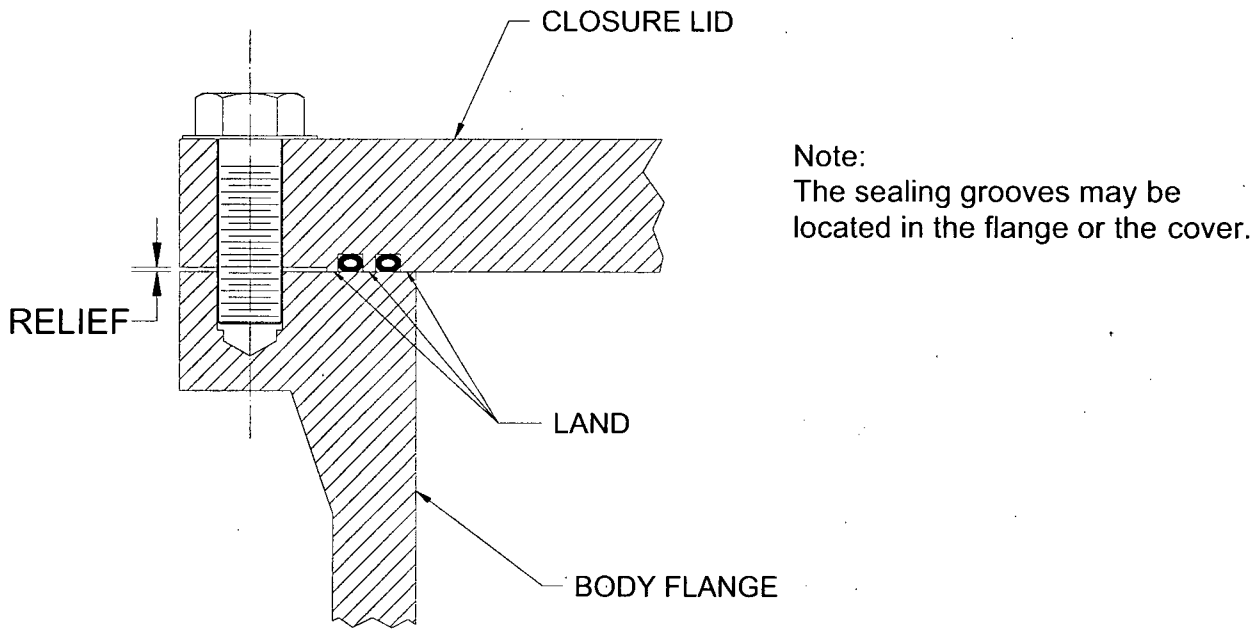

FIGURE 2.6.1: ESSENTIAL ELEMENTS OF A CLASSICAL "CONTROLLED COMPRESSION JOINT"

HOLTEC INTERNATIONAL COPYRIGHTED MATERIAL

THIS FIGURE IS PROPRIETARY IN ITS ENTIRETY

FIGURE 2.6.2: [PROPRIETARY TEXT REMOVED]

HOLTEC INTERNATIONAL COPYRIGHTED MATERIAL

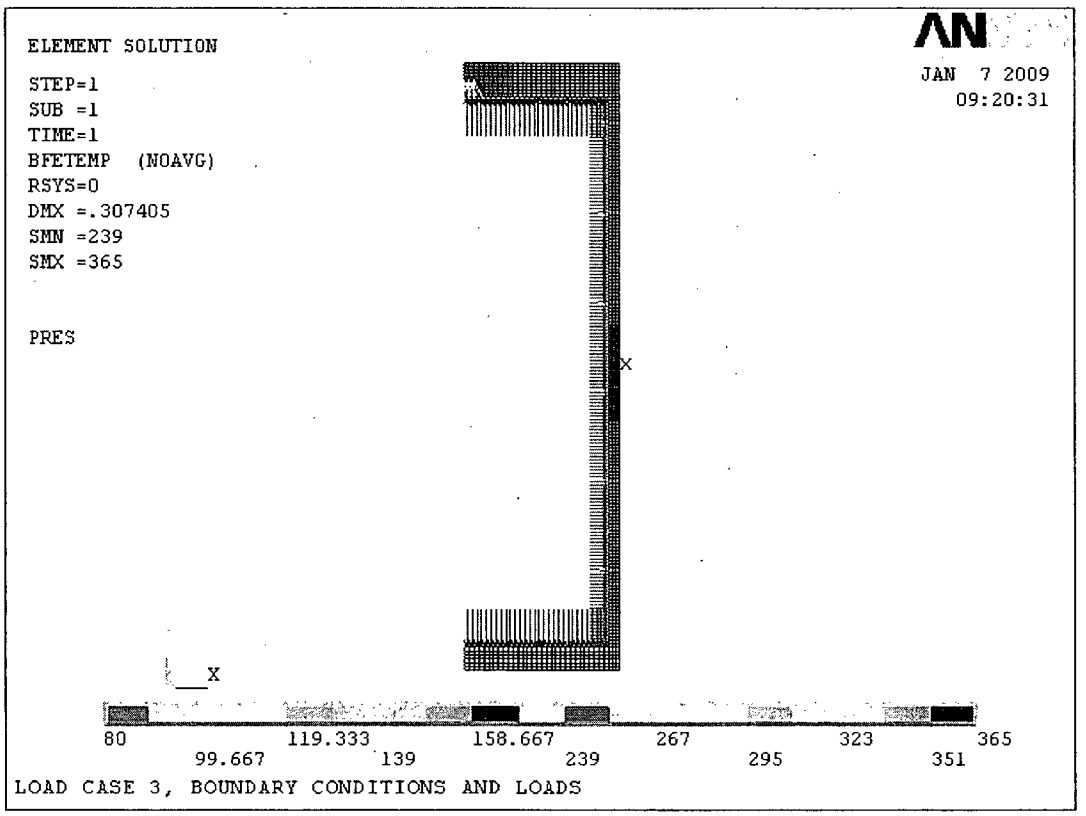

Figure 2.6.3: Finite Element Model for Load Combination N1

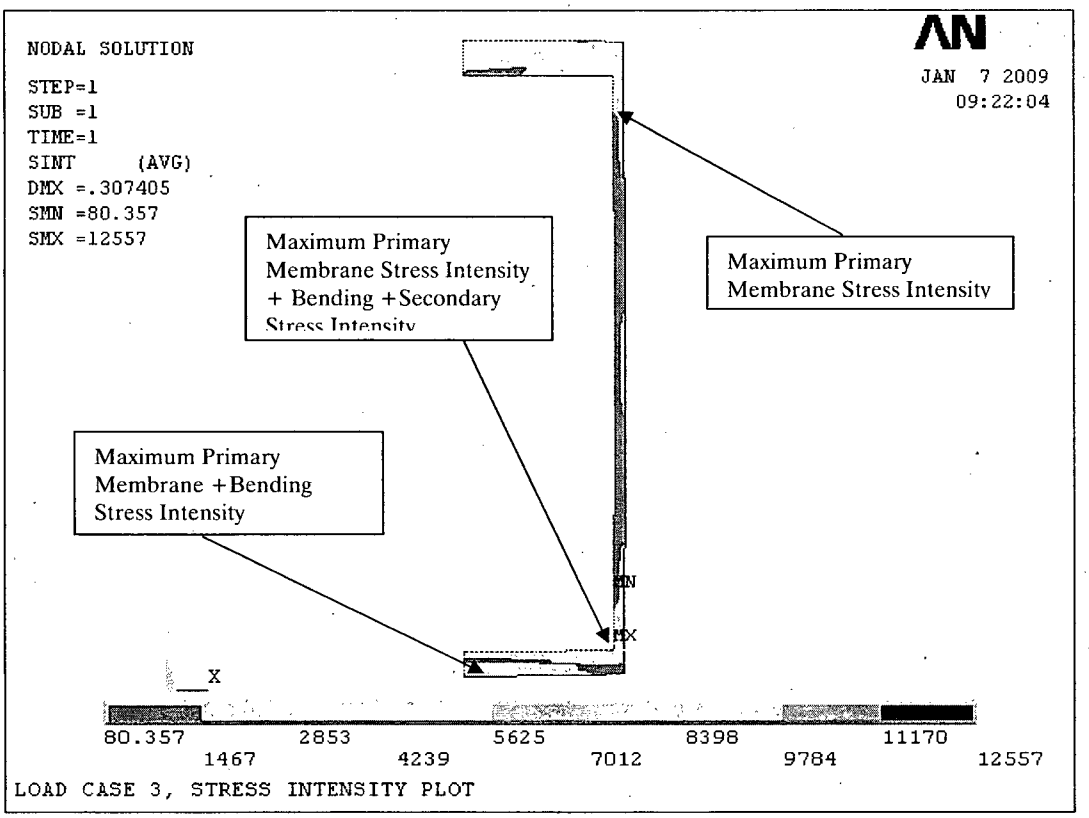

Figure 2.6.4: Results for Stress Intensity for Load Combination N1

HOLTEC INTERNATIONAL COPYRIGHTED MATERIAL

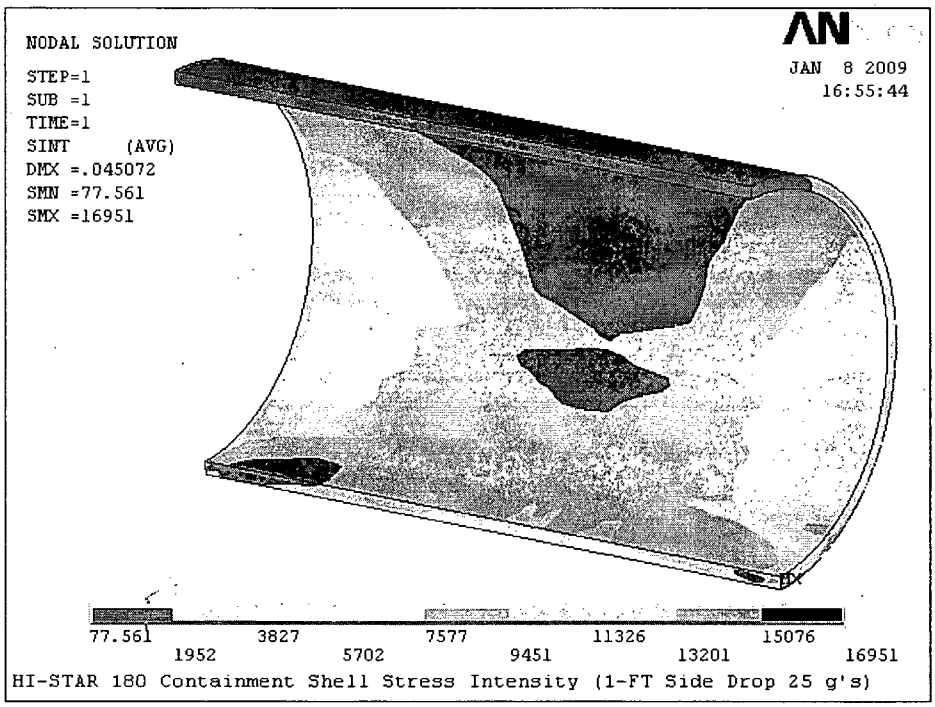

Figure 2.6.5: Stress Intensity Distribution in Containment Shell for 1-Ft Side Drop

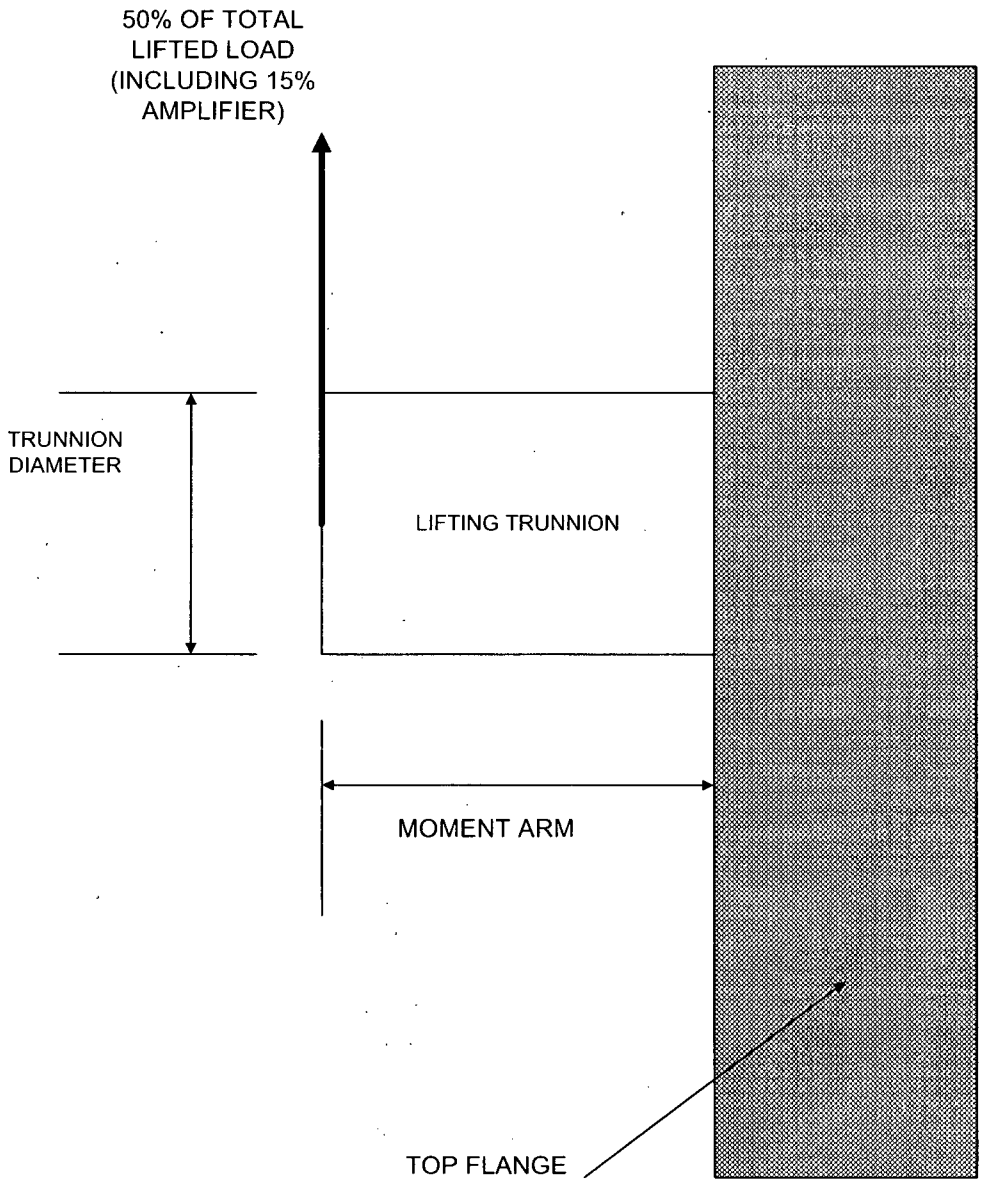

Figure 2.5.1: Top Lifting Trunnion with Applied Force

HOLTEC INTERNATIONAL COPYRIGHTED MATERIAL

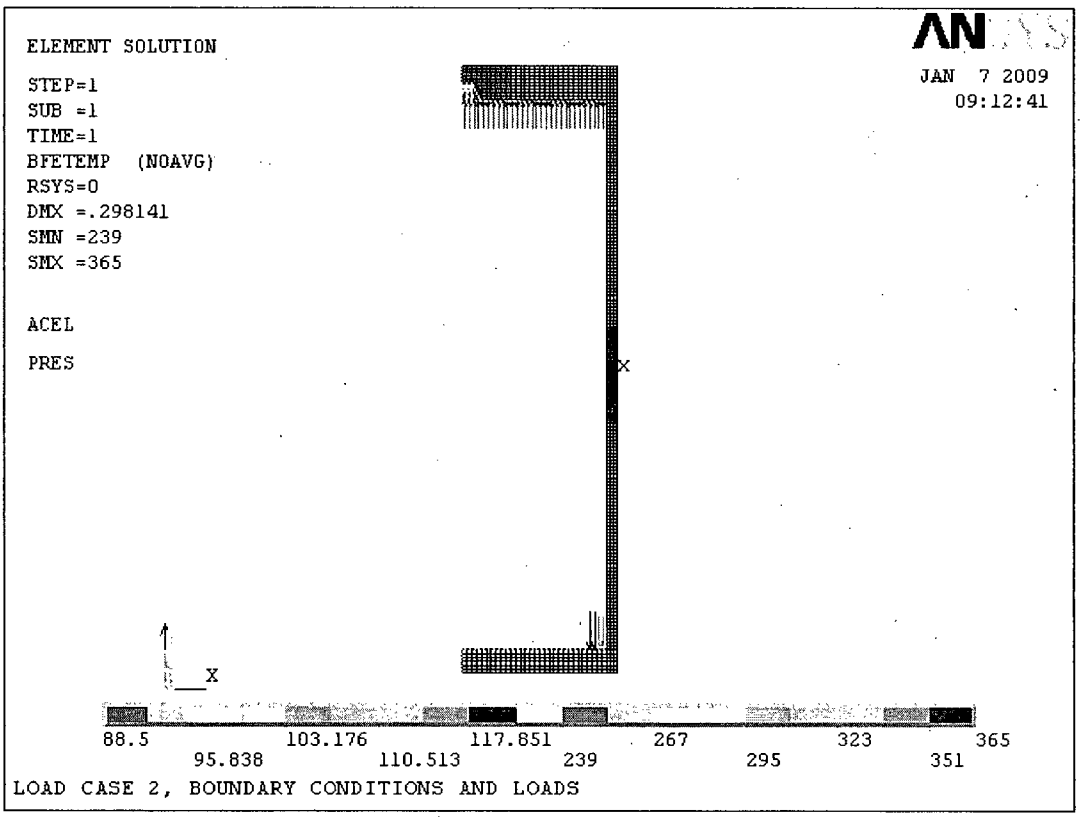

Figure 2.5.2: Shell and Baseplate Finite Element Model for Lifting Load Case (Fuel, Self Weight, Fuel Basket, and Fuel Basket Supports)

HOLTEC INTERNATIONAL COPYRIGHTED MATERIAL

2.7 HYPOTHETICAL ACCIDENT CONDITIONS

It is shown in the following subsections that the HI-STAR 180 Package meets the safety criteria set forth in 10CFR71 when it is subjected to the hypothetical accident conditions specified in 10CFR71.73. In particular, required technical data is presented herein to support the conclusion that HI-STAR 180 Package, when subjected to hypothetical accident conditions, will maintain its structural integrity to satisfy the subcriticality, containment, shielding, and temperature requirements of 10CFR71.

The hypothetical accident conditions, as defined in 10CFR71.73 and explained in Regulatory Guide 7.9, are applied to the HI-STAR 180 Package as a sequence of loading events. The package is first subject to a 9-meter (30-foot) drop. As required by the regulations, the "free drop" should be assumed to occur in the orientation that will cause maximum damage. To identify the most vulnerable orientation the drop simulation is performed in four candidate orientations. From the post-impact package configuration determined to have the most damaging orientation, the package is then subject to a 1-meter (40-inch) drop onto a 15 cm (6 inch) diameter mild steel pin (of length sufficient to impart the impact of energy to the cask structure through penetrant action). In the third step, the package is subject to a 1475°F temperature fire environment for 30 minutes. Finally the package is subject to water immersion.

As a separate loading event, the cask containment boundary is also subjected to deep immersion in accordance with 10CFR71.61.

[PROPRIETARY TEXT REMOVED]

2.7.1 9-meter Free Drop

2.7.1.1 Problem Description and Dynamic Model

As specified in §71.73, the performance and structural integrity of the HI-STAR 180 Package must be evaluated for the most severe drop scenarios. The appurtenance that is critical to protecting the integrity of the containment boundary during a high momentum collision event is the AL-STAR impact limiter.

The central purpose of the impact limiter, defined as an essential package appurtenance in Section 1.2, is to limit the package maximum deceleration, α_{max}. The HI-STAR package, consisting of the loaded cask and top and bottom impact limiters, is essentially a cylindrical body with a very rigid interior (namely, the cask) surrounded by a pair of relatively soft crushable structures. The crushable structure (impact limiter) should deform and absorb the kinetic energy of impact without detaching itself from the cask, disintegrating, or otherwise malfunctioning. A falling cylindrical body may theoretically impact the target surface in an infinite number of orientations; the impact limiter must limit decelerations to insure that stress intensity and performance limits, as described in Section 2.1, are satisfied, and to ensure that the impact limiter does not detach from the cask, regardless of the impact orientation. In general, a drop event orientation is defined by the angle of the HI-STAR 180

longitudinal axis, "θ", with the impact surface. In this notation, $\theta = 0°$ means a side drop and $\theta = 90°$ implies a vertical or end drop scenario. In any orientation, the drop height is measured from the lowest point on the package.

An intermediate value of θ at which the point of impact is directly below the center of gravity (C.G.) of the HI-STAR package warrants special mention. This drop orientation is traditionally called the C.G.-over-corner (CGOC) configuration The CGOC orientation, "θ_c", is the demarcation line between single and dual impact events. At $90° > \theta > \theta_c$ the leading end of the package (denoted as the "primary" impact limiter) is the sole participant in absorption of incident kinetic energy. At $\theta < \theta_c$ drop orientations, the initial impact and crush of the leading (primary) impact limiter is followed by the downward rotation of the package with the initial impact surface acting as the pivot, culminating in the impact of the opposite (secondary) impact limiter on the target surface. In the dual impact scenarios, the first and second impact limiter crush events are referred to as the "primary" and "secondary" impacts, respectively. It is reasonable to speculate that for certain values of θ, the secondary impact may be the more severe of the two. Figures 2.7.1 through 2.7.4 illustrate the orientation of a (generic) cask at the initiation of a drop event.

[PROPRIETARY TEXT REMOVED]

Finally, the package design must satisfy all criteria in ambient temperature conditions (temperature and humidity) that may prevail during transport. Therefore, the impact limiter design must be functionally insensitive to the ambient temperature and humidity. To limit the temperature range experienced by the impact limiter during transport, an insulation board (see drawing package in Section 1.3) is incorporated in the impact limiter. Thus, the temperature of the crush material in the impact limiter is only marginally influenced by the heat load of the contents. The minimum acceptable value of the insulation board's thermal resistance is provided in Table 2.2.10.

As the drawings in Chapter 1 indicate, in addition to the crushable material, the impact limiter contains a cylindrical shell that is stiffened with internal gussets. This buttressed steel shell is sized to be sufficiently robust to preclude gross plastic deformation or buckling during impact events and thus serve as the backbone of the impact limiter.

To summarize, the performance objectives of the impact limiter are set down as five discrete items, namely:
[PROPRIETARY TEXT REMOVED]

The last two objectives are realized by utilizing crush material that is insensitive to the ambient psychrometric environment, and by using surface preservatives or corrosion resistant materials as indicated in the drawing package in Section 1.3. The stainless steel skin is procured to "bright annealed" finish to minimize absorption of solar thermal radiation.

[PROPRIETARY TEXT REMOVED]

The remaining design objectives, namely, limiting of the maximum rigid body deceleration under the 9-meter drop event and preventing contact of the cask with the unyielding surface, are demonstrated by performing dynamic simulations using the LS-DYNA [2.5.3] finite element code, which has been benchmarked extensively by others [2.7.5, 2.7.6] and by Holtec using the test data from the static tests of the crush material and, more importantly, from the quarter-scale model 9-meter drop experiments carried out at the Oak Ridge National Laboratory in support of HI-STAR 100 Part 71 certification in the late 90s [2.7.4] (see Appendix 2.B). As discussed in Appendix 2.B, the LS-DYNA simulation model for the family of Al-STAR impact limiters is a credible and reliable vehicle for determining the HI-STAR 180 Package's impact performance *with respect to the extent of crush and the peak g-load.* LS-DYNA has been used by Holtec International in a wide variety of impact scenarios in dry storage projects [2.7.10].

Regulatory Guide 7.9 calls for evaluation of the response of the containment component in terms of stress intensity, and includes investigation of structural stability as well as the consequences of the combined effects of temperature gradients, pressure, and other loads. The work effort to fulfill the above Reg. Guide 7.9 recommendation is carried out using the static analysis approach, as discussed in the foregoing.

[PROPRIETARY TEXT REMOVED]

The previously described key attributes implemented in the HI-STAR 180 LS-DYNA model take advantage of the state-of-art numerical analysis capability of the finite element code for simulating transient, nonlinear impact events. With good accuracy demonstrated in the benchmarking effort (Appendix 2.B) as well in the analysis independently performed by the NRC/PNNL investigators [2.7.5], the previously described HI-STAR 180 finite element model is deemed to be able to predict the impact performance of the package under various accidental drop conditions with reliable accuracy.

[PROPRIETARY TEXT REMOVED]

2.7.1.2 Simulation of Drop Events

A number of drop simulations of the HI-STAR 180 Package on LS-DYNA were carried out under various drop orientations.

The postulated free drop events belong to four broad categories, namely:

1. Vertical-end drop
2. Lateral (side drop)
3. C.G.-over-corner
4. Oblique (slap down)

Under certain categories of events, there may be more than one drop "orientation". The orientation of drop, θ, is defined by the angle between the horizontal plane and the axis of the cask pointed from

its base to its lid at the instant of impact. $\theta = 90°$ is a vertical-end drop event with bottom-down configuration. Similarly, $\theta = 0°$ means side (lateral) drop.

The various drop orientations analyzed using LS-DYNA to identify the most damaging scenario with reasonable assurance are summarized in Table 2.7.3. Of these, the slap-down event warrants special mention because it often produces the bounding decelerations in transport packages and has two candidate orientations in an axially nonsymmetrical package, namely:

i. Wherein the top impact limiter strikes first, followed by the second impact at the bottom impact limiter.

ii. The obverse of case (i) wherein the primary impact occurs at the bottom impact limiter followed by a second impact at the top impact limiter.

As can be seen from Table 2.7.3, upper and lower bound properties of the crush material were also considered to ensure that the largest value of α_{max} and maximum crush, d_{max}, have been identified.

The initial velocity of the package corresponding to a free fall from 9 meters at impact in all impact scenarios is 13.392 m/sec (43.9 ft/sec).

2.7.1.3 Summary of Results

Certain observations from Table 2.7.3 provide valuable information with respect to the structural performance of the package.

i. The secondary slap down impact is always more severe than the primary impact: The maximum deceleration and impact limiter crush occur in the region of the secondary impact.

ii. All body bolt stresses remain below the yield point, i.e., there is no risk of failure of any bolt fastened to the top forging.

iii. The bolts joining the impact limiters to the cask remain essentially undeformed in all cases (i.e., their stresses do not reach the material plastic limit.)

Table 2.7.2 summarizes the maximum values of α_{max} for the axial and lateral direction from all of the drop scenarios simulated on LS-DYNA. The governing values of α_{max} (axial and lateral) culled from Table 2.7.2, and rounded up by a modest amount (for conservatism), henceforth referred to as "Design Basis" decelerations, β_{max}, are provided in Table 2.7.4. These design basis decelerations are used in the "static analyses" to determine the margins-of-safety in the different constituent parts of the package.

Evidently, the axial and lateral β_{max} values respectively challenge the top and bottom plate components, and the fuel basket panels in bending. Thus, β_{max} (axial) determines the margin-of-safety in the baseplate and inner closure lid (the outer closure lid does not experience the direct

impact of the contents). The β_{max} (lateral) governs the lateral loading on and deflection of the fuel basket walls.

The axial deceleration, β_{max}, can be cast as a pressure loading on the inner closure lid (or the baseplate, depending on the assumed sense of action of the inertia load). The pressure p_{max} corresponding to β_{max} is given by

$$p_{max} = 4\,W_c\,\frac{\beta_{max}}{(\pi D^2)}$$

Where W_c is the weight of the cask contents (basket and basket shims plus fuel) and D is the inside diameter of the containment closure flange.

In the "static analysis" procedure, p_{max} is applied as a pressure loading on the inner lid and the baseplate. Table 2.7.5 summarizes the value of p_{max} and identifies the most vulnerable locations and parts in the package that must be evaluated.

The effect of lateral deceleration is to cause flexing of the fuel basket cell panels transverse to the direction of the load under the magnified inertia load of the fuel, and to load the panels oriented in the direction of the inertia load in direct compression.

The outer closure lid, also a containment boundary part, does not experience the direct inertia load from β_{max} tending to unload the seals (as it does on the inner closure lid). Rather, a reaction load from the crushing of the impact limiter material acts on the outer surface of the outer lid, causing flexural action. While the gasketed joint is not directly challenged, the bending stress intensity in the outer lid must be shown to remain within Level D condition limits.

For convenience, the allowable stress limits necessary for the safety evaluation of each part are compiled in Table 2.6.3.

Based on the tabular results presented in Tables 2.7.6 and 2.7.9, it is concluded that:

- The primary stress intensities for the containment components are below the ASME NB limits for all drop configurations.
- The closure lid bolts remain in the elastic stress range and the gaskets remain under a compressed state at the conclusion of the event. Therefore, continued bolted joint effectiveness in the wake of the 9-meter free drop event is assured.
- The monolithic shield surrounding the containment shell remains intact.

- The fuel basket does not undergo any plastic deformation in the active fuel region, and the global average permanent deformation remains below the limit value established by the acceptance criteria in Section 2.1.

- The small quantity of lead, used for shielding in the HI-STAR 180, is included in the LS-DYNA model. The lead is characterized by the properties given in Table 2.2.11. A review of all drop and puncture simulation results leads to the conclusion that there is no lead slump.

- Since the ability to accurately include and evaluate large displacements is included within the LS-DYNA algorithm, the effect of any instability is automatically included. Based on the evaluated results, it is concluded that there is no buckling of the containment components during any of the postulated Hypothetical Accident events.

2.7.1.4 Fracture Analysis

[PROPRIETARY TEXT REMOVED]

Using the approach described above, the potential fracture of the closure lid bolts and the monolithic shield cylinder under cold conditions at -40 degrees F is investigated. By simulating the standard Charpy V-notch impact test using the minimum Charpy energy specified in Subsection 2.1, the failure strains of the SA-193 B7 and SA-564 630 bolting materials and SA-352 LCC shield cylinder material are calibrated.

[PROPRIETARY TEXT REMOVED]

From the above simulations, it can be concluded that the minimum Charpy value prescribed for the shield cylinder is adequate to prevent a significant loss of shielding under all governing Part 71 impact events; and the minimum Charpy values prescribed for the closure lid bolts are adequate to prevent a loss of seal integrity. The details of this evaluation are documented in the Holtec proprietary calculation package [2.1.12].

2.7.2 Crush

An evaluation of package crush is not required for the HI-STAR 180.

2.7.3 Puncture

10CFR71 specifies that a puncture event be considered as a hypothetical accident condition subsequent to the hypothetical 9-meter drop event. For this event, it is postulated that the package now falls freely through a distance of 1 meter (40 inch) and impacts a 15 cm (6 inch) diameter mild steel bar. The effects of the puncture drop will, quite ostensibly, be most severe when the steel bar is perpendicular to the impact surface. Therefore, all puncture analyses assume that the bar is perpendicular to the impact surface. Puncture is considered on the sidewall, as discussed in Subsection 2.7.1.4, and on the top end (a puncture on the bottom end is not bounding since there is a

full welded connection, rather than a bolted connection that needs to remain intact).

Two independent methods are used to analyze the hypothetical puncture event. The first method uses the LS-DYNA simulation model to examine the puncture accidents. For the top end puncture, the impact limiter is conservatively ignored. A mild steel bar, having the appropriate dimensions, is added to the model, placed in the proper orientation, and fixed to the ground. The package is then assumed to have a known initial velocity at contact with the bar. For conservatism, the side puncture model only credits the solid portion of monolithic shield, which is inboard from the neutron shield cavities. Further details of the simulation model and the results (all output figures) for the top end puncture and side puncture are provided in the Holtec Proprietary calculation packages [2.6.1] and [2.1.12], respectively.

The second method uses energy principles and strength of materials formula to determine the primary stress intensities in the containment boundary. In particular, local penetration is examined by comparing the potential energy of the falling cask with the strain energy required to shear a circular plug of material from an otherwise rigid plate. For the top end puncture, the Impact Limiter is conservatively ignored. The primary stress intensity in the containment shell due to the side puncture is calculated assuming that the shell deflects like a cantilever beam, which is fixed at the shell cross-section through the cask centroid. The stress in the closure lid away from the immediate vicinity of the impact is calculated by considering a simply supported circular plate under a concentrated load at its center. Details of the analysis and the results from each puncture accident are provided in the Holtec Proprietary calculation package [2.1.12]. The key results of the puncture analysis are summarized in Table 2.7.7.

The results from the puncture analyses yield the following conclusions:

i. The bolted joint maintains its integrity; the margin-against-leakage parameter, m, (defined in paragraph 2.6.1.4) remains at the maximum possible value of 10.

ii. No thru-wall penetration of the containment boundary or dose blocker parts (shield cylinder) is indicated. The total depth of local indentation is a fraction of the available material thickness in the path of the penetrant. Although the outer region of the monolithic shield (where the neutron shield cavities are located) is not credited in the model, the steel bar is expected to penetrate this region in the case of a side puncture event (see Figure 2.7.14).

iii. The stress levels in the closure lid, containment shell, and baseplate remain below their respective Level D condition limits.

iv. The monolithic shield cylinder continues to maintain its shielding effectiveness (i.e., no thru-wall cracks).

The above results confirm the structural adequacy of the package under the "puncture" event of §71.73.

2.7.4 Thermal

In this subsection, the structural consequences of the 30-minute fire event, which occurs after hypothetical drop and puncture events, are evaluated using the metal temperature data from Chapter 3 where a detailed analysis of the fire and post-fire condition is presented. Specifically, the evaluations show that:

1. The metal temperature, averaged across any section of the containment boundary, remains below the maximum permissible temperature for the Level A condition in the ASME Code for NB components. Strictly speaking, the fire event is a Level D condition for which Subsection NB of the ASME Code, Section III does not prescribe a specific metal temperature limit. The Level A limit is imposed herein for convenience because it obviates the need for creep considerations to ascertain post-fire containment integrity.

2. The outer surface of the cask, directly exposed to the fire does not slump (i.e., suffer primary or secondary creep). This condition is readily ruled out for steel components since the metal temperature remains below 50% of the metal melting point (approximately 3000°F).

3. Internal interferences among the constituents of the HI-STAR 180 Package do not develop due to their differential thermal expansion during and after the fire transient. [PROPRIETARY TEXT REMOVED]

4. Cask closure lid bolts do not unload; therefore, there is no reduction of compression load on the gasket surfaces to a level that may precipitate leakage of gaseous contents from the containment boundary.

Table 2.7.8 provides a summary of the key results obtained from the continued sealing analysis under the fire accident; the details of the solution are documented in the Holtec Proprietary calculation package [2.1.12]. An analysis methodology previously used for the HI-STAR 100 licensing effort is used here, with the only loading being the temperature change of the bolted connection from the fire. Because of the differences in coefficient of thermal expansion between the lid and flange and the bolt, the bolt loads increase from their starting value, but the increase is balanced by increased compression on the lands. Therefore, the fire transient, occurring after a 9-meter drop accident or a puncture, does not lead to loss of seal integrity in either lid. The package, therefore, meets all acceptance criteria set down in Section 2.1 for the postulated fire transient

2.7.4.1 Summary of Pressures and Temperatures

Section 3.4 contains a discussion of the peak temperatures occurring during and after the fire transient. It is concluded in that section that:

1. The containment boundary, protected by the monolithic shield, remains below 500 degrees F (SA-203 E material).
2. The containment boundary that is within the confines of the impact limiters remains below 700 degrees F (SA-350 LF3 material).
3. The portion of the containment boundary directly exposed to the fire may have local outer surface temperatures in excess of 700 degrees F, but the bulk metal temperature of the material volume remains under 700 degrees F. All metal temperatures remain well below the "threshold damage temperature".
4. The Holtite-B neutron shield material computes to experience temperature in excess of its design limit, leading to a certain modest loss in the cask's neutron shielding capacity.

2.7.4.2 Differential Thermal Expansion

Differential thermal expansions under the limiting conditions of the fire transient are evaluated in Subsection 3.4.4. The analyses show that, under the fire condition, there is no restraint of free thermal expansion of the fuel basket.

2.7.4.3 Stress Calculations

Strength of materials calculations are used to evaluate the performance of the bolted joint in the Containment Boundary. Analyses show that:

i. The primary stress intensities in the Containment Boundary remain well below the Level D (Faulted Condition) limits.

ii. The bolt stresses in the Containment Boundary joint, due to differential thermal expansion, rise but remain within Level D limits.

iii. The temperature of the Holtite material exceeds its recommended operating limit for a very short duration; hence, a certain amount of loss of neutron shielding will occur.

2.7.5 Immersion - Fissile Material

10CFR71.73(c)(5) specifies that fissile material packages, in those cases where water leakage has not been assumed for criticality analysis, must be evaluated for immersion under a head of water of at least 0.9 m (3 ft.) in the attitude for which maximum leakage is expected. Accordingly, the analysis is performed to demonstrate that there will be no water leakage in the package subsequent to the fire.

A head of water at a depth of 0.9 m (3 ft.) is equal to 1.3 psi. The head of water (1.3 psi) is bounded by the hypothetical accident condition external pressure for the cask (10CFR71.61), which is considered later. Analysis summarized in this chapter demonstrates the containment component meets the applicable stress intensity allowables for normal conditions of transport and for

hypothetical accident conditions (both conditions impose pressures larger than 1.3 psi on the components). Further, it is demonstrated that the sealing function is not impaired under these conditions. Therefore, there is no in-leakage of water into the cask under a head of water at a depth of 0.9 m (3 ft.).

2.7.6 Immersion - All packages

This external pressure condition is bounded by the analysis in subsection 2.7.7.

2.7.7 Deep Water Immersion Test

The HI-STAR 180 containment boundary is subject to an all-around external pressure of 2.0 MPa (290 psi) after applying initial bolt preload. Code Case N-284 is used to evaluate the propensity for containment shell instability assuming the monolithic shielding does not prevent the 290 psi pressure from acting directly on the outer surface of the containment shell. The Holtec Proprietary calculation package [2.1.12] contains the supporting details; it is demonstrated there that there is no yielding of the vessel and that there is no elastic or plastic instability of the containment shell. Since the external pressure acts in a direction to add additional pressure to the lands of the lids, seal opening is not a concern for this accident. The primary stress intensity in the lids, assuming that the lids are subject to 290 psi and are conservatively considered as simply supported plates at the bolt circle, meet the Level D ASME Code limits (this is easily demonstrated by examining the results for the N1 normal load condition summarized in Section 2.6). In-leakage of water through the containment system boundary seals is confirmed to be non-credible to satisfy the intent of ISG-19 [2.7.3]. Therefore, the package meets all acceptance criteria given in Section 2.1 under this immersion condition.

2.7.8 Summary of Damage

The results presented in Subsections 2.7.1 through 2.7.7 show that the HI-STAR 180 Package meets the requirements of 10CFR71.61 and 10CFR71.73. All (plausibly) vulnerable orientations of free drop have been analyzed. Two puncture events have also been considered and reported in the tables in Section 2.7. All safety factors are greater than 1.0 for the hypothetical accident conditions of transport, and the sealing function is maintained at the end of each event and at the end of the sequence. The fuel basket does not experience any primary plastic strain after any of the accidents simulated in this safety analysis effort. Therefore, the HI-STAR 180 package, under the hypothetical accident conditions of transport, has adequate structural integrity to satisfy the subcriticality, containment, shielding, and temperature requirements of 10CFR71.

Specifically, the analyses summarized in this section show that:

i. The HI-STAR 180 containment space will remain inaccessible to the moderator under the immersion event of §71.73, which follows free drop, puncture, and fire.

ii. Both lids will continue to maintain a positive contact load at their interfaces with the flange, indicating that all [PROPRIETARY TEXT REMOVED] gaskets will remain functional to contain the radioactive material [PROPRIETARY TEXT REMOVED].

HOLTEC INTERNATIONAL COPYRIGHTED MATERIAL

iii. Localized plastic deformation under the stabbing action of the mild steel bar is indicated. However, there is no through-wall puncture and the damage is superficial.

iv. The primary stresses in the Metamic-HT panels remain elastic even under the inertia loads from the 9-meter drop event. (Maintaining elastic response, i.e., full deflection recovery after a drop event, imposed on the HI-STAR 180 fuel baskets is a far more stringent criterion than the ASME Level D service condition used in most packages.)

HOLTEC INTERNATIONAL COPYRIGHTED MATERIAL

Table 2.7.1: [PROPRIETARY TEXT REMOVED]

HOLTEC INTERNATIONAL COPYRIGHTED MATERIAL

Table 2.7.2: [PROPRIETARY TEXT REMOVED]

HOLTEC INTERNATIONAL COPYRIGHTED MATERIAL

Table 2.7.3: Nine-Meter Free Drop Simulations Results Using LS-DYNA

Case No.	Drop Scenario	θ	Maximum Computed Deceleration in g's α_{max}		Maximum Crush Inch		Reference Figure	Comments
			Axial	Lateral	Allowable* Value	Computed Value		
1.	End drop – bottom down (UB**)	90	85.03	-	15.12	7.56	2.7.1	
2.	End drop – top down (UB)	90	68.25	-	15.12	7.27	2.7.1	
3.	Side drop (UB)	0	-	73.83	10.85	9.95	2.7.3	
4.	C.G.-over-corner drop – top down (UB)	65.6	39.87	18.09	30.44	23.28	2.7.2	
5.	Oblique drop (slap down) – primary impact at the top end (UB)	6	-	79.26	10.85	9.48	2.7.4	Bounding results of the primary and secondary impacts are reported
6.	Oblique drop (slap down) – primary impact at the bottom end (UB)	6	-	72.26	10.85	9.48	2.7.4	Bounding results of the primary and secondary impacts are reported
7.	Side drop (LB)	0	-	67.48	10.85	10.63	2.7.3	

* Allowable crush based on distance to closest point on steel backbone, except for end drop where allowable crush is 63% of the distance to closest point.
** "UB" indicates Upper Bound crush strength values are used in drop simulation; "LB" indicates Lower Bound crush strength values are used in drop simulation.

Table 2.7.4: Design Basis Decelerations*, β_{max} , for "Static Analysis" of 9-Meter Free Drop

Direction		Deceleration (in g's)	Controlling Drop Scenario
Axial	Top End	82	Top End Drop
	Bottom End	90	Bottom End Drop
Lateral		95	Oblique Drop

* Design Basis Deceleration in each direction is set down to be greater than the largest value of α_{max} from Table 2.7.3 in that direction by a modest percentage (for conservatism).

Table 2.7.5: Equivalent Load from the Design Basis Decelerations, β_{max}

Direction		β_{max} (in g's)	Equivalent Load	Type of Stress and Location of Maximum Stress
Axial	Top End	82	1,118 psi	Flexure of baseplate, flexure of inner and outer lids, unloading of gasket seals, possible overstressing of bolts, axial in-plane compression of Metamic-HT panels in the fuel basket.
	Bottom End	90	1,220 psi	
Lateral		95	746 lb/inch per panel	Flexure of Metamic-HT panels, in-plane compression of Metamic-HT panels, flexure of containment shell, monolithic shield cylinder strength.

HOLTEC INTERNATIONAL COPYRIGHTED MATERIAL

Table 2.7.6: - Results from 30-Ft Drop Simulations Using ANSYS Static Analysis

Item	ALLOWABLE STRESS†	TOP END DROP	BOTTOM END DROP	SIDE DROP
Inner or Outer Closure Lid Top – Primary Bending Stress Intensity – MPa (ksi)	506.8 (73.5)	263.17 (38.17) SF = 1.93	NA	NA
Containment Shell – Primary Membrane Stress Intensity – Mpa (ksi)	337.86 (49.0)	58.47 (8.48) SF = 5.78	200.15 (29.03) SF = 1.69	199.05 (28.87) SF = 1.7
Baseplate – Primary Membrane + Bending Stress Intensity – Mpa (ksi)	506.78 (73.5)	NA	317.85 (46.1)†† SF = 1.59	NA
Fuel Basket Deformation – Global Average < 0.5mm?	NA	NA	NA	Yes
Inner Lid Bolts – Average Service Stress (Stress Intensity) – MPa (ksi)	895.11 (129.825)	758.97 (110.08) SF = 1.18	NA	NA
Inner Lid Bolts – Maximum Service Stress at Extreme Fiber (Stress Intensity) – MPa (ksi)	1068.7 (155.0)	866.53 (125.68) SF = 1.23	NA	NA
Outer Lid Bolts – Average Service Stress (Stress Intensity) – MPa (ksi)	655.54 (95.075)	518.21 (75.16) SF = 1.26	NA	NA
Outer Lid Bolts – Maximum Service Stress at Extreme Fiber (Stress Intensity) – MPa (ksi)	861.88 (125.0)	772.7 (112.07) SF = 1.12	NA	NA
Lid Seals Remain Sufficiently Compressed?	NA	Yes	NA	NA
Monolithic Shield Cylinder – Primary Effective Stress (Compared to Ultimate Strength) – MPa (ksi)	482.6 (70.0)	107.56 (15.6) SF = 4.49	94.94 (13.77) SF = 5.08	334.26 (48.48) SF = 1.44

Note: "SF" means Safety Factor. "NA" means Not Applicable or Not Bounding.

† See also Table 2.6.3.

†† As an example, the stress distribution in the baseplate under 30-ft bottom end drop is shown in Figure 2.7.12.

HOLTEC INTERNATIONAL COPYRIGHTED MATERIAL

Table 2.7.7: Minimum Safety Factors for Containment Boundary Components Due to Puncture Event

ITEM	CALCULATED VALUE, MPa (ksi)	ALLOWABLE LIMIT, MPa (ksi)	SAFETY FACTOR
Side Puncture – Primary Membrane Stress Intensity in Containment Shell	29.7 (4.31)	337.3 (48.9)	11.3
Top End Puncture – Primary Membrane Plus Bending Stress Intensity in Outer Closure Lid	351.3 (51.0)	506.8 (73.5)	1.44

HOLTEC INTERNATIONAL COPYRIGHTED MATERIAL

Table 2.7.8: Bolted Joint Performance Under the Fire Transient Event

ITEM	AT PEAK OF FIRE	BEFORE AND AFTER FIRE
Inner Closure Lid Bolt – Average Service Stress MPa (ksi)	300.1 (43.53)	262.0 (38.0)
Outer Closure Lid Bolt – Average Service Stress Mpa (ksi)	346.7 (50.29)	189.6 (27.5)

HOLTEC INTERNATIONAL COPYRIGHTED MATERIAL

Table 2.7.9: Key Performance Objectives for Non-Containment Components of the HI-STAR 180

Criterion	Result
Effective Stress in Monolithic Shield – Primary Effective Stress Below Ultimate Strength	Yes
Fuel Basket Deformation – Global Average < 0.5 mm	Yes

HOLTEC INTERNATIONAL COPYRIGHTED MATERIAL

THIS FIGURE IS PROPRIETARY IN ITS ENTIRETY

Figure 2.7.1: [PROPRIETARY TEXT REMOVED]

HOLTEC INTERNATIONAL COPYRIGHTED MATERIAL

THIS FIGURE IS PROPRIETARY IN ITS ENTIRETY

Figure 2.7.2: [PROPRIETARY TEXT REMOVED]

HOLTEC INTERNATIONAL COPYRIGHTED MATERIAL

THIS FIGURE IS PROPRIETARY IN ITS ENTIRETY

Figure 2.7.3: [PROPRIETARY TEXT REMOVED]

HOLTEC INTERNATIONAL COPYRIGHTED MATERIAL

THIS FIGURE IS PROPRIETARY IN ITS ENTIRETY

Figure 2.7.4: [PROPRIETARY TEXT REMOVED]

HOLTEC INTERNATIONAL COPYRIGHTED MATERIAL

THIS FIGURE IS PROPRIETARY IN ITS ENTIRETY

Figure 2.7.5A: [PROPRIETARY TEXT REMOVED]

HOLTEC INTERNATIONAL COPYRIGHTED MATERIAL

THIS FIGURE IS PROPRIETARY IN ITS ENTIRETY

Figure 2.7.5B: [PROPRIETARY TEXT REMOVED]

HOLTEC INTERNATIONAL COPYRIGHTED MATERIAL

THIS FIGURE IS PROPRIETARY IN ITS ENTIRETY

Figure 2.7.5C: [PROPRIETARY TEXT REMOVED]

HOLTEC INTERNATIONAL COPYRIGHTED MATERIAL

THIS FIGURE IS PROPRIETARY IN ITS ENTIRETY

Figure 2.7.5D: [PROPRIETARY TEXT REMOVED]

HOLTEC INTERNATIONAL COPYRIGHTED MATERIAL

THIS FIGURE IS PROPRIETARY IN ITS ENTIRETY

Figure 2.7.6: [PROPRIETARY TEXT REMOVED]

HOLTEC INTERNATIONAL COPYRIGHTED MATERIAL

THIS FIGURE IS PROPRIETARY IN ITS ENTIRETY

Figure 2.7.7: [PROPRIETARY TEXT REMOVED]

HOLTEC INTERNATIONAL COPYRIGHTED MATERIAL

THIS FIGURE IS PROPRIETARY IN ITS ENTIRETY

Figure 2.7.8: [PROPRIETARY TEXT REMOVED]

HOLTEC INTERNATIONAL COPYRIGHTED MATERIAL

THIS FIGURE IS PROPRIETARY IN ITS ENTIRETY

Figure 2.7.9: 37 [PROPRIETARY TEXT REMOVED]

HOLTEC INTERNATIONAL COPYRIGHTED MATERIAL

THIS FIGURE IS PROPRIETARY IN ITS ENTIRETY

Figure 2.7.10: [PROPRIETARY TEXT REMOVED]

HOLTEC INTERNATIONAL COPYRIGHTED MATERIAL

THIS FIGURE IS PROPRIETARY IN ITS ENTIRETY

Figure 2.7.11A: [PROPRIETARY TEXT REMOVED]

HOLTEC INTERNATIONAL COPYRIGHTED MATERIAL

THIS FIGURE IS PROPRIETARY IN ITS ENTIRETY

Figure 2.7.11B: [PROPRIETARY TEXT REMOVED]

HOLTEC INTERNATIONAL COPYRIGHTED MATERIAL

THIS FIGURE IS PROPRIETARY IN ITS ENTIRETY

Figure 2.7.11C: [PROPRIETARY TEXT REMOVED]

HOLTEC INTERNATIONAL COPYRIGHTED MATERIAL

THIS FIGURE IS PROPRIETARY IN ITS ENTIRETY

Figure 2.7.12: [PROPRIETARY TEXT REMOVED]

HOLTEC INTERNATIONAL COPYRIGHTED MATERIAL

THIS FIGURE IS PROPRIETARY IN ITS ENTIRETY

Figure 2.7.13: [PROPRIETARY TEXT REMOVED]

HOLTEC INTERNATIONAL COPYRIGHTED MATERIAL

THIS FIGURE IS PROPRIETARY IN ITS ENTIRETY

Figure 2.7.14: [PROPRIETARY TEXT REMOVED]

HOLTEC INTERNATIONAL COPYRIGHTED MATERIAL

2.8 ACCIDENT CONDITIONS FOR AIR TRANSPORT OF PLUTONIUM

This section is not applicable to the HI-STAR 180 Package. This application does not seek approval for air transport of plutonium and, therefore, does not address the accidents defined in 10CFR71.74.

HOLTEC INTERNATIONAL COPYRIGHTED MATERIAL

2.9 ACCIDENT CONDITIONS FOR FISSILE MATERIALS FOR AIR TRANSPORT

This section is not applicable to the HI-STAR 180 Package. This application does not seek approval for air transport of fissile materials and, therefore, does not address the accidents defined in 10CFR71.55(f).

HOLTEC INTERNATIONAL COPYRIGHTED MATERIAL

2.10 SPECIAL FORM

This section is not applicable to the HI-STAR 180 Package. This application does not seek approval for transport of special form radioactive material; therefore, the requirements of 10CFR71.75 are not applied.

HOLTEC INTERNATIONAL COPYRIGHTED MATERIAL

2.11 FUEL RODS

The cladding of the fuel rods is the first boundary for confining radiological matter in the HI-STAR 180 Package. Analyses have been performed in Chapter 3 to ensure that the maximum temperature of the fuel cladding is well below ISG-11, Rev. 3 regulatory limits. [2.11.1].

The vertical drop of the package, leading to a rapid axial deceleration of the stored CSF and the consequent large flexural strains, is recognized as the most vulnerable free drop configuration from the standpoint of potential damage to the fuel [2.11.2, 2.11.3]. Fortunately, the problem of large inertial loading of fuel has been comprehensively studied in a recently published NUREG [2.11.5] and studies conducted by PNLL and USNRC [2.11.4], which obsolesces prior analyses and provides a robust and conservative basis for prognosticating fuel damage under vertical drop events.

[PROPRIETARY TEXT REMOVED]

Table 2.11.1: [PROPRIETARY TEXT REMOVED]

Table 2.11.2: [PROPRIETARY TEXT REMOVED]

Table 2.11.3: [PROPRIETARY TEXT REMOVED]

HOLTEC INTERNATIONAL COPYRIGHTED MATERIAL

Table 2.11.4: [PROPRIETARY TEXT REMOVED]

Table 2.11.5: [PROPRIETARY TEXT REMOVED]

HOLTEC INTERNATIONAL COPYRIGHTED MATERIAL

THIS FIGURE IS PROPRIETARY IN ITS ENTIRETY

Figure 2.11.1: [PROPRIETARY TEXT REMOVED]

HOLTEC INTERNATIONAL COPYRIGHTED MATERIAL

THIS FIGURE IS PROPRIETARY IN ITS ENTIRETY

Figure 2.11.2: [PROPRIETARY TEXT REMOVED]

HOLTEC INTERNATIONAL COPYRIGHTED MATERIAL

THIS FIGURE IS PROPRIETARY IN ITS ENTIRETY

Figure 2.11.3: [PROPRIETARY TEXT REMOVED]

HOLTEC INTERNATIONAL COPYRIGHTED MATERIAL

THIS FIGURE IS PROPRIETARY IN ITS ENTIRETY

Figure 2.11.4: [PROPRIETARY TEXT REMOVED]

HOLTEC INTERNATIONAL COPYRIGHTED MATERIAL

THIS FIGURE IS PROPRIETARY IN ITS ENTIRETY

Figure 2.11.5: [PROPRIETARY TEXT REMOVED]

HOLTEC INTERNATIONAL COPYRIGHTED MATERIAL

THIS FIGURE IS PROPRIETARY IN ITS ENTIRETY

Figure 2.11.6: [PROPRIETARY TEXT REMOVED]

HOLTEC INTERNATIONAL COPYRIGHTED MATERIAL

THIS FIGURE IS PROPRIETARY IN ITS ENTIRETY

Figure 2.11.7: [PROPRIETARY TEXT REMOVED]

HOLTEC INTERNATIONAL COPYRIGHTED MATERIAL

THIS FIGURE IS PROPRIETARY IN ITS ENTIRETY

Figure 2.11.8: [PROPRIETARY TEXT REMOVED]

HOLTEC INTERNATIONAL COPYRIGHTED MATERIAL

THIS FIGURE IS PROPRIETARY IN ITS ENTIRETY

Figure 2.11.9: [PROPRIETARY TEXT REMOVED]

HOLTEC INTERNATIONAL COPYRIGHTED MATERIAL

THIS FIGURE IS PROPRIETARY IN ITS ENTIRETY

Figure 2.11.10: [PROPRIETARY TEXT REMOVED]

HOLTEC INTERNATIONAL COPYRIGHTED MATERIAL

THIS FIGURE IS PROPRIETARY IN ITS ENTIRETY

Figure 2.11.11: [PROPRIETARY TEXT REMOVED]

HOLTEC INTERNATIONAL COPYRIGHTED MATERIAL

THIS FIGURE IS PROPRIETARY IN ITS ENTIRETY

Figure 2.11.12: [PROPRIETARY TEXT REMOVED]

2.12 REFERENCES

The following generic industry and Holtec produced references may have been consulted in the preparation of this document. Where specifically cited, the identifier is listed in the SAR text or table. Active Holtec Calculation Packages, which are the repository of all relevant licensing and design basis calculations, are annotated as "latest revision". Submittal of the latest revision of such Calculation Packages to the USNRC and other regulatory authorities during the course of regulatory reviews is managed under the company's Configuration Control system.

[2.1.1] ASME Boiler & Pressure Vessel Code, Section III, Subsection NB, American Society of Mechanical Engineers, 2007.

[2.1.2] Regulatory Guide 7.6, "Design Criteria for the Structural Analysis of Shipping Cask Containment Vessels", Revision 1, March, 1978, U.S. Nuclear Regulatory Commission.

[2.1.3] 10CFR Part 71, "Packaging and Transportation of Radioactive Materials", Title 10 of the Code of Federal Regulations, Office of the Federal Register, Washington, D.C.

[2.1.4] Regulatory Guide 7.8, "Load Combinations for the Structural Analysis of Shipping Casks for Radioactive Material", Revision 1, March, 1989, U.S. Nuclear Regulatory Commission.

[2.1.5] NUREG-0612, "Control of Heavy Loads at Nuclear Power Plants," United States Nuclear Regulatory Commission, July, 1980.

[2.1.6] ASME Boiler & Pressure Vessel Code, Section II, Parts A and D, American Society of Mechanical Engineers, 2007.

[2.1.7] Regulatory Guide 7.11, "Fracture Toughness Criteria of Base Material for Ferritic Steel Shipping Cask Containment Vessels with a Maximum Wall Thickness of 4 Inches", United States Nuclear Regulatory Commission, June, 1991.

[2.1.8] Regulatory Guide 7.12, "Fracture Toughness Criteria of Base Material for Ferritic Steel Shipping Cask Containment Vessels with a Wall Thickness Greater Than 4 Inches But Not Exceeding 12 Inches", United States Regulatory Commission, June, 1991.

[2.1.9] NUREG/CR-1815, "Recommendations for Protecting Against Failure by Brittle Fracture in Ferritic Steel Shipping Containers Up to Four Inches Thick."

[2.1.10] ASME Boiler & Pressure Vessel Code, Section III, Appendices, American Society of Mechanical Engineers, 2007.

[2.1.11] NUREG-1617 Standard Review Plan for Transportation Packages for Spent Nuclear Fuel, USNRC, (2000).

[2.1.12] Calculation Package for the HI-STAR 180 Transport Cask System, Holtec International Proprietary Report HI-2063552, latest revision.*

[2.1.13] "Metamic-HT Qualification Sourcebook", by I. Rampall, T.G. Haynes, and J. Menhart, Holtec Report No. HI-2084122, (2009) (Holtec Proprietary).*

[2.1.14] ASME Boiler & Pressure Vessel Code, Section III, Subsection NF, American Society of Mechanical Engineers, 2007.

[2.1.15] ASTM B221, Standard Specification for Aluminum and Aluminum-Alloy Extruded Bars, Rods, Wire, Profiles, and Tubes, 2008

[2.2.1] Hexweb Honeycomb Attributes and Properties, HEXCEL Corp, Pleasanton, CA., 2006. (web site is www.hexcel.com).

[2.2.2] "Safety Analysis Report for the HI-STAR 100 Package", Holtec Report HI-951251, latest revision, Docket No. 71-9261.

[2.2.3] DOE-HDBK – 1017/2-93, DOE Fundamentals Handbook, Material Science, Vol. 2 of 2.

[2.2.4] NRC Bulletin 96-04: Chemical, Galvanic or Other Reactions in Spent Fuel Storage and Transportation Casks, July 5, 1996.

[2.2.5] L.W. Ricketts, Fundamentals of Nuclear Hardening of Electronic Equipment, Robert E. Krieger Publishing Company, Malabar, FL, 1986.

[2.2.6] J.H. Evans, "Structural Analysis of Shipping Casks, Volume 8, Experimental Study of Stress-Strain Properties of Lead Under Specified Impact Conditions", ORNL/TM-1312, Vol. 8, ORNL, Oak Ridge, TN, August, 1970.

[2.2.7] Properties of Aluminum Alloys, Tensile, Creep, and Fatigue Data at High and Low Temperatures, ASM International, November 2006.

[2.5.1] ANSI N14.6-1993, "American National Standard for Special Lifting Devices for Shipping Containers Weighing 10,000 Pounds (4,500 kg) or More for Nuclear Materials," American National Standards Institute, Inc.

* Supporting document submitted with the HI-STAR 180 License Application (Docket 71-9325).

[2.5.2] ANSYS, Version 9.0, Ansys, Inc., 2005.

[2.5.3] LS-DYNA, Version 971, MSC Software, 2006.

[2.5.4] Field Manual of the A.A.R. Interchange Rules, Rule 88, American Association of Railroads, 1996.

[2.5.5] Crane Manufacturer's Association of America (CMAA), Specification No. 70, 1988.

[2.5.6] NUREG 1536, Standard Review Plan for Dry Cask Storage Systems, USNRC, 1977

[2.6.1] Finite Element Analyses for the HI-STAR 180, Holtec Proprietary Report, HI-2063584, Rev. 3, 2009.*

[2.6.2] Calculation Package of Humboldt Bay Impact Limiters, Holtec Proprietary Report HI-2063486, latest revision (Docket # 71-9261, TAC L24029).

[2.6.3] Regulatory Guide 7.9, "Standard Format and Content of Part 71 Applications for Approval of Packaging for Radioactive Material", Rev. 2, USNRC, March 2005.

[2.6.4] Buckling of Bars, Plates, and Shells, D.O. Brush and B.O. Almroth, McGraw-Hill, 1975, p.22.

[2.7.1] Holtec Proprietary Report HI-981891, "Impact Limiter Test Report - Second Series", Rev 3, 1998. *

[2.7.2] Holtec Proprietary Report HI-2063591, "Benchmarking of LS-DYNA for Simulation of Hypothetical Drop Conditions of Transport", Rev. 1, 2007.*

[2.7.3] Not Used

[2.7.4] Holtec Proprietary Report HI-2073743, "Benchmarking the LS-DYNA Impact Response Prediction Model for the HI-STAR Transport Package Using the AL-STAR Impact Limiter Test Data", Rev. 1, 2008.*

[2.7.5] Shah, M.J., Klymyshyn N.A., and Kreppel B.J., "HI-STAR 100 Spent Fuel Transport Cask Analytic Evaluation for Drop Events", Packaging, Transport, and Security of Radioactive Materials, Vol. 18, No. 1, W.S. Maney & Sons (2007).

[2.7.6] Containment Performance of Transportable Storage Casks at 9-m Drop Test, Hitoshi Tobita and Kenji Araki, PATRAM 2004, Berlin, Germany, 9/2004.

* Supporting document submitted with the HI-STAR 180 License Application (Docket 71-9325).

[2.7.7] "Mechanical Design of Heat Exchangers and Pressure Vessel Components", by K.P. Singh and A. I. Soler, Arcturus Publishers, Cherry Hill, New Jersey, 1100 pages, hardbound (1984).

[2.7.8] Holtec Proprietary Report HI-2073715, Benchmarking of LS-DYNA For Use With Polyurethane Foam Filled Impact Limiter, 2007, Revision 0.

[2.7.9] "Validation of an Impact Limiter Crush Prediction Model with Test Data: TheCase of the HI-STAR 100 Package", K.P. Singh, A.I. Soler, and C. Bullard, PATRAM 2004, Berlin, Germany, September 20-24, 2004.

[2.7.10] USNRC ASLB, "Final Partial Initial Decision on F-16 Aircraft Accident Consequences", Docket No. 72-22-ISFSI, ASLB# 97-732-02-ISFSI, dated2/24/2005.

[2.7.11] "Guidelines for Conducting Impact Tests on Shipping Packages for Radioactive Material", Mok, Carlson, Lu, and Fischer, UCRL-ID-121673, Lawrence Livermore National Laboratory, September 1995.

[2.7.12] QA Documentation Package for ANSYS (Versions 5.3 and Higher), HI-2012627, Rev. 4, 2007.

[2.7.13] QA Documentation for LS-DYNA3D, HI-961519, Rev. 6, 2008.

[2.11.1] SFPO-ISG-11, Revision 3, "Cladding Considerations for the Transportation and Storage of Spent Fuel"

[2.11.2] The Buckling of Fuel Rods in Transportation Casks Under Hypothetical Accident Conditions, G.S. Bjorkman, PATRAM 2004, Berlin, Germany, 9/2004.

[2.11.3] Spent Nuclear Fuel Structural Response When Subject to an End Impact Accident, D. Tang, J. Guttmann, B. Koeppel, and H. Adkins, PATRAM 2004, Berlin, Germany, 9/2004.

[2.11.4] PVP2004-2804, "Spent Nuclear Fuel Structural Response When Subject to an End Impact Accident", PVP-Vol 483, Transportation, Storage and Disposal of Radioactive Materials-2004, Adkins, Koeppel, and Tang.

[2.11.5] NUREG/CR-1864, "A Pilot Probabilistic Risk Assessment of a Dry Cask Storage System at a Nuclear Power Plant", USNRC, Washington D.C., 2007.

* Supporting document submitted with the HI-STAR 180 License Application (Docket 71-9325).

Appendix 2.A: Description of Computer Codes for Structural Evaluation*

Two commercial computer programs, both with a well established history of usage in the nuclear industry, have been utilized to perform structural and mechanical numerical analyses documented in this submittal. These codes are ANSYS Mechanical and LS-DYNA. A brief synopsis of the capabilities of each code is presented below:

ANSYS Mechanical

ANSYS is the original (and commonly used) name for ANSYS Mechanical general-purpose finite element analysis software. ANSYS Mechanical is the version of ANSYS commonly used for structural applications. It is a self contained analysis tool incorporating pre-processing (geometry creation, meshing), solver, and post processing modules in a unified graphical user interface. ANSYS Mechanical is a general purpose finite element modeling package for numerically solving a wide variety of mechanical problems. These problems include: static/dynamic structural analysis (both linear and non-linear), heat transfer and fluid problems, as well as acoustic and electro-magnetic problems.

ANSYS Mechanical has been independently QA validated by Holtec International and used for structural analysis of casks, fuel racks, pressure vessels, and a wide variety of SSCs, for over twenty years.

LS-DYNA

LS-DYNA is a general purpose finite element code for analyzing the large deformation static and dynamic response of structures including structures coupled to fluids. The main solution methodology is based on explicit time integration and is therefore well suited for the examination of the response to shock loading. A contact-impact algorithm allows difficult contact problems to be easily treated. Spatial discretization is achieved by the use of four node tetrahedron and eight node solid elements, two node beam elements, three and four node shell elements, eight node solid shell elements, truss elements, membrane elements, discrete elements, and rigid bodies. A variety of element formulations are available for each element type. Adaptive re-meshing is available for shell elements. LS-DYNA currently contains approximately one-hundred constitutive models and ten equations-of-state to cover a wide range of material behavior.

In this safety analysis report, LS-DYNA is used to analyze all loading conditions that involve short-time dynamic effects.

* This appendix contains generic information and is identical to the one submitted in the HI-STAR 60 SAR. Under Holtec's configuration control, this appendix will be immediately revised in all submitted SARs if a USNRC request-for-additional-information (RAI) necessitates a change to its contents.

HOLTEC INTERNATIONAL COPYRIGHTED MATERIAL

Appendix 2.B:

THIS APPENDIX IS PROPRIETARY IN ITS ENTIRETY

HOLTEC INTERNATIONAL COPYRIGHTED MATERIAL

CHAPTER 3: THERMAL EVALUATION

3.0 INTRODUCTION

In this chapter, compliance of the HI-STAR 180 Package to 10CFR Part 71 [1.0.2] and ISG-11, Rev. 3 [3.3.3] thermal requirements is evaluated for normal transport and hypothetical accident conditions of transport. The analysis considers passive rejection of decay heat from the Spent Nuclear Fuel (SNF) to a 10CFR71-mandated environment for normal transport and hypothetical fire accident conditions.

The 10CFR Part 71 regulation defines the thermal requirements of transport packages. The requirements are as follows:

1. A package must be designed, constructed, and prepared for shipment so that in still air at 38°C (100°F) and in the shade, no accessible surface of the package would have a temperature exceeding 85°C (185°F) in an exclusive use shipment [§71.43(g)].

2. With respect to the initial conditions for the events of normal conditions of transport and hypothetical accident conditions, the demonstration of compliance with the requirements of 10CFR71 must be based on the ambient temperature preceding and following the event remaining constant at that value between -29°C (-20°F) and 38°C (100°F) which is most unfavorable for the feature under consideration. The initial internal pressure within the containment must be considered to be the maximum normal operating pressure [§71.71(b) and §71.73(b)].

3. For normal conditions of transport, a heat event consisting of an ambient temperature of 38°C (100°F) in still air and prescribed insolation must be evaluated [§71.71(c)(1)].

4. For normal conditions of transport, a cold event consisting of an ambient temperature of -40°C (-40°F) in still air and shade must be evaluated [§71.71(c)(2)].

5. Evaluation for hypothetical accident conditions is to be based on sequential application of the specified events, in the prescribed order, to determine their cumulative effect on a package [§71.73(a)].

6. For hypothetical accident conditions, a thermal event consisting of a fully engulfing hydrocarbon fuel/air fire with an average emissivity coefficient of at least 0.9, with an average flame temperature of at least 802°C (1475°F) for a period of 30 minutes [§71.73(c)(4)].

HOLTEC INTERNATIONAL COPYRIGHTED MATERIAL

Section 3.1 describes the thermal design features of the HI-STAR 180 package. Section 3.2 lists the material properties data required to perform the thermal analyses and the applicable temperature limits criteria required to demonstrate the adequacy of the HI-STAR package design under normal and hypothetical accident conditions. Thermal analyses to evaluate the normal transport are described and evaluated in Section 3.3. Thermal analyses for hypothetical accident conditions are described and evaluated in Section 3.4.

HOLTEC INTERNATIONAL COPYRIGHTED MATERIAL

3.1 DESCRIPTION OF THERMAL DESIGN

3.1.1 Design Features

Design details of the HI-STAR 180 Package are presented in Chapter 1 and structural and mechanical features are described in Chapters 1 and 2. The HI-STAR 180 package geometry is detailed in Holtec drawings included in Section 1.3. All materials of construction are itemized in the drawings. The assembled packaging with impact limiters installed is shown in Figure 1.3.2. As shown in this figure, the HI-STAR 180 package is equipped with a personnel barrier to prevent access to hot cask surfaces. The package consists of a Metamic-HT fuel basket inside a thick steel cask with twin (inner and outer) bolted closure lids. Two basket designs, the F-32 and F-37 baskets are available for storing upto 32 and 37 PWR fuel assemblies. The fuel basket is a honeycomb structure engineered with square-shaped compartments to store PWR fuel. Prior to lid closure, the cask cavity is backfilled with helium. This provides a stable and inert environment for the transport of the SNF. Heat is transferred from the cask to the environment by passive heat transport mechanisms only.

The HI-STAR 180 Package is designed to safely dissipate heat under passive conditions (no wind). During transport, the HI-STAR 180 Package is placed in a horizontal position with impact limiters installed at both ends of the cask. Under normal transport conditions, the cask contents (fuel basket, fuel and basket shims) rest on solid surfaces. Direct contact between the cask and its contents enhance heat dissipation. Prior to cask closure the cask cavity is backfilled with sub-atmospheric pressure helium to eliminate leakage of radioactive gases to the environment. A double-lid design is engineered to eliminate air in-leakage during transport and to prevent water ingress under a hypothetical water immersion accident. Presence of a substantially more conductive medium (helium) relative to air in the cavity spaces aids heat transfer by minimizing gap resistances and dissipating heat by natural convection in the cavity peripheral spaces.

The fuel basket is a matrix of square-shaped fuel compartments sized to store PWR Spent Nuclear Fuel (SNF). The basket is formed by a honeycomb structure of thick Metamic-HT plates. The fuel basket is surrounded by an array of shaped Aluminum spacers (basket shims) inserted in the cask cavity peripheral spaces. Cross-sectional views of the two fuel basket designs are provided in Chapter 1. Heat is dissipated in the fuel basket principally by conduction of heat in the highly conductive Metamic-HT plates arrayed in two orthogonal directions. Heat dissipation in the fuel basket peripheral spaces is by a combination of contact heat transfer, helium conduction and radiation across narrow peripheral spacer gaps and by conduction through the Aluminum basket shims. The fuel basket and the Aluminum shims reside in a containment boundary formed by the containment shell, baseplate and two closure lids. The containment shell is enclosed in a shrink fitted thick-section cask body engineered with neutron shield pockets. The HI-STAR 180 cask body is engineered with low profile fins to enhance heat transfer area and concomitant dissipation of heat. In the interest of conservatism dissipation of heat by fins is ignored.

The helium backfill gas is an integral part of the HI-STAR 180 thermal design. The helium fills all the spaces between solid components and provides an improved conduction medium (compared to air) for dissipating decay heat. Additionally, helium in the spaces between the fuel basket and the cask cavity is heated differentially and dissipates heat by the so-called "Rayleigh" convection. To ensure that the helium gas is retained and not diluted by lower conductivity air, the cask containment boundary is designed as an ASME Section III pressure vessel equipped with high integrity double seals in *both* the inner and outer closure lids. This ensures the presence of helium during transport. The helium gas is therefore retained in an undiluted state, and may be credited in the thermal analyses.

An important thermal design criterion imposed on the HI-STAR 180 Package is to ensure that the peak fuel cladding temperatures are below regulatory limits. An equally important design criterion is to minimize temperature gradients within the fuel basket to minimize thermal stresses. In order to meet these design objectives, the HI-STAR 180 fuel basket is designed to possess certain distinctive characteristics, which are summarized in the following.

The cask design minimizes resistance to heat transfer within the basket and basket periphery regions. This is ensured by designing the fuel basket with highly conductive Metamic-HT plates. In the fuel basket peripheral spaces thick Aluminum basket shims are inserted to facilitate basket-to-cask heat transfer. The cask design incorporates top and bottom plenums with interconnected downcomer paths to facilitate heat dissipation by internal helium circulation. This mode of heat transfer is active when the cask is tilted a few degrees from horizontal orientation. The top and bottom plenums are formed between the cask ends and fuel basket lateral flow holes in the top and bottom sections of each fuel cell wall. The fuel basket is designed to minimize structural discontinuities (i.e., gaps), which can introduce large thermal resistances to heat flow. Consequently, temperature gradients are minimized in this design, which results in lower thermal stresses within the basket. Low thermal stresses are also ensured by provisions in the cask design that permit unrestrained axial and radial thermal growth of the basket.

The HI-STAR 180 Package is designed to transport PWR spent fuel assemblies. As explained next, thermal analysis of the HI-STAR 180 package considers all three fundamental modes of heat transfer: conduction, natural convection and thermal radiation. On the outside surface of the cask, heat is dissipated to the environment by buoyancy induced convective air-flow (natural convection) and thermal radiation. Within the cask body, heat dissipation is principally by heat conduction.. Inside the cask cavity heat dissipation is conservatively limited to conduction and radiation. Between surfaces (e.g., between neighboring fuel rods) heat is transported by a combination of conduction through a gaseous medium (helium) and thermal radiation. Finally buoyancy-induced convective heat transport occurs within the open spaces of the cask cavity. Heat transfer between the fuel basket external surface and enclosure shell inside wall is enhanced by the so-called "Rayleigh" effect in differentially heated cavities [3.1.1]. In the interest of conservatism convective heat transfer in the cavity spaces is neglected.

In Section 3.2 the thermal criteria for ensuring Spent Nuclear Fuel (SNF) integrity and cask effectiveness are provided. To ensure SNF integrity, the ISG-11 recommended cladding temperature

limits [3.3.3] are adopted (Table 3.2.11). To ensure cask effectiveness the cask materials and components are required to be below the pressure and temperature limits for creep, yield, decomposition and melting (Tables 2.1.1, 3.2.10 and 3.2.12).

3.1.2 Contents Decay Heat

The HI-STAR 180 Package decay heat limits are conservatively understated to limit radiation dose from hot (short cooled) fuel. This is ensured by requiring fuel loading to comply with both the decay heat and burnup limits in Tables 1.2.8 and 1.2.9. The HI-STAR 180 Package is designed to allow fuel loading under uniform and regionalized loadings. The cask design heat loads are defined in Chapter 1, Tables 1.2.8 and 1.2.9. These tables define the permissible heat load patterns for the F-32 and F-37 baskets. The aggregate cask heat load, Q_d, under all storage configurations is limited to 32 kW.

3.1.3 Summary Table of Temperatures

The HI-STAR 180 Package temperatures are analyzed for normal transport condition and hypothetical fire accident event. The analytical modeling is discussed in Sections 3.3 and 3.4. The analysis results are provided in Tables 3.1.1 and 3.1.3. The HI-STAR 180 normal transport and hypothetical accident temperatures comply with the normal and accident temperature limits specified in Tables 3.2.10, 3.2.11 and 3.2.12.

3.1.4 Summary Table of Maximum Pressures

The HI-STAR 180 Package containment boundary pressures are computed for normal transport condition and hypothetical fire accident event. The analytical modeling is discussed in Sections 3.3 and 3.4. The analysis results are provided in Tables 3.1.2 and 3.1.4. The HI-STAR 180 normal transport and hypothetical accident containment pressures comply with the pressure limits specified in Structural Chapter 2, Table 2.1.1.

3.1.5 Cask Surface Temperature Evaluation

In accordance with the regulatory requirement specified in 10CFR71 (§71.43(g)), the cask surface temperature is computed in still air at 38°C (100°F) and in the shade. Under this scenario the maximum computed cask surface temperature, 105°C (221°F) is above the allowable surface temperature limit of 85°C (185°F). To meet the accessible surface temperature limit, a personnel barrier as defined in Chapter 1 will be required. The personnel barrier must be engineered to provide personnel protection without adversely impacting cask and fuel temperatures. In Section 3.3 a bounding personnel barrier is defined and evaluated.

Table 3.1.1: HI-STAR 180 Normal Transport Maximum Temperatures

Material/Component	Temperature °C (°F)
Fuel Cladding	312 (594)
Fuel Basket	273 (523)
Containment Shell	181 (358)
[PROPRIETARY TEXT REMOVED]Neutron Shield	164 (327)
Cask Surface	117 (243)
Inner Closure Lid Neutron Shield Bottom Neutron Shield	110 (230) 124 (255)
Impact Absorbers Exposed Surface	74 (165)
[PROPRIETARY TEXT REMOVED]Closure Lid[1]	117 (243)
[PROPRIETARY TEXT REMOVED]	99 (210)
Containment Baseplate[1]	128 (262)
[PROPRIETARY TEXT REMOVED]Lid Seals[2]	111 (232)
Aluminum Basket Shims	222 (432)
Impact Limiter Type 1 Crush Material Bottom • Bulk • Maximum Top • Bulk • Maximum	 69 (156) 78 (172) 69 (156) 95 (203)
Impact Limiter Type 2 Crush Material Bottom • Bulk • Maximum Top • Bulk • Maximum	 63 (145) 67 (153) 63 (145) 67 (153)

1 In accordance with temperature limits Table 3.2.10 Note (a) the maximum section temperatures of structural members are reported.

2 [PROPRIETARY TEXT REMOVED] lid seal temperature is bounding.

HOLTEC INTERNATIONAL COPYRIGHTED MATERIAL

Table 3.1.2: HI-STAR 180 Maximum Normal Operating Pressure (MNOP)[1]

Condition	Absolute Pressure[2] kPa (psia)	Cask Cavity Bulk Temperature °C (°F)
Initial Backfill (at 21.1°C (70°F))	40 (5.8)[3]	
Normal Condition	67.6 (9.8)	222 (432)
With 3% Rods Rupture(Note 1)	88.9 (12.9)	

Note 1: In accordance with NUREG-1617, 3% of the rods are assumed to be breached releasing 100% fill gas and 30% fission gas to containment.

1 Pressure analysis in accordance with heat condition specified in 10 CFR 71.71(c)(1) in the absence of venting, external ancillary cooling or operational controls.

2 The coincident gage pressure defined as pressure above 1 atm ambient pressure is below the gage pressure limit under normal transport specified in Table 2.1.1.

3 The HI-STAR 180 helium backfill pressure limits are specified in Chapter 1. For a bounding evaluation the upperbound limit is used in the pressure calculations.

Table 3.1.3: Hypothetical Fire Accident Maximum HI-STAR 180 Temperatures

Material/Component	Initial Condition °C (°F)	During Fire °C (°F)	Post Fire Cooldown °C (°F)
Fuel Cladding	312 (594)	312 (594)	344 (651)
Fuel Basket	273 (523)	273 (523)	311 (592)
Containment Shell	181 (358)	181 (358)	220 (428)
[PROPRIETARY TEXT REMOVED] Neutron Shield	164 (327)	667 (1233)	667 (1233)
Cask Surface	117 (243)	687 (1269)	687 (1269)
[PROPRIETARY TEXT REMOVED]Closure Lid Neutron Shield Bottom Neutron Shield	110 (230) 124 (255)	265 (509) 163 (325)	265 (509) 219 (426)
Impact Limiter Exposed Surface	74 (165)	637 (1179)	637 (1179)
[PROPRIETARY TEXT REMOVED]Closure Lid*	117 (243)	123 (253)	177 (351)
[PROPRIETARY TEXT REMOVED]	99 (210)	383 (721)	383 (721)
Containment Baseplate*	128 (262)	148 (298)	196 (385)
[PROPRIETARY TEXT REMOVED]Lid Seals	111 (232)+	190 (374)++	220 (428)++
Aluminum Basket Shims	222 (432)	222 (432)	261 (502)
Impact Limiter Type 1 Crush Material			
Bottom			
• Bulk	69 (156)	318 (604)	318 (604)
• Maximum	78 (172)	506 (943)	506 (943)
Top			
• Bulk	69 (156)	314 (597)	314 (597)
• Maximum	95 (203)	504 (939)	504 (939)
Impact Limiter Type 2 Crush Material			
Bottom			
• Bulk	63 (145)	496 (925)	496 (925)
• Maximum	67 (153)	637 (1179)	637 (1179)
Top			
• Bulk	63 (145)	494 (921)	494 (921)
• Maximum	67 (153)	635 (1175)	635 (1175)

* In accordance with temperature limits Table 3.2.10 Note (a) the maximum section temperatures of structural members are reported.

\+ Inner lid seal temperature is bounding.

++ Outer lid seal temperature is bounding.

Table 3.1.4: Maximum HI-STAR 180 Hypothetical Fire Accident Pressures

Condition	Absolute Pressure[1] kPa (psia)	Cask Cavity Bulk Temperature °C (°F)
No fuel rods rupture	72.4 (10.5)	260 (500)
With assumed 100% fuel rods rupture[2]	861.8 (125)	

1 The coincident gage pressure defined as pressure above 1 atm ambient pressure is below the accident condition gage pressure limit specified in Table 2.1.1.

2 Pressure analysis is based on NUREG 1617 requirements: Release of 100% of the rods fill gas and 30% of the significant radioactive gases from ruptured rods.

3.2 MATERIAL PROPERTIES AND COMPONENT SPECIFICATIONS

3.2.1 Material Properties

Materials present in the HI-STAR 180 Packaging include structural steels, aluminum, neutron shielding material (Holtite-B), neutron absorber (Metamic-HT), impact limiter crush material and helium. In Table 3.2.1, a summary of references used to obtain cask material properties for performing all thermal analyses is presented.

Thermal conductivity data of cask structural steels, neutron shielding materials, impact limiters and helium are provided in Table 3.2.2. Thermal conductivities of fuel, aluminum basket shims and fuel basket (Metamic-HT) are provided in Tables 3.2.3, 3.2.4 and 3.2.5.

Surface emissivity data for key materials of construction are provided in Table 3.2.6. [PROPRIETARY TEXT REMOVED] A theoretical bounding solar absorbtivity coefficient is applied to all exposed cask surfaces.

In Table 3.2.7, the specific heat and density data of cask materials is presented. These properties are also used in performing transient (hypothetical fire accident condition) analyses. The viscosity of helium is presented in Table 3.2.8.

The HI-STAR 180 Package exposed surfaces heat transfer coefficient is calculated by accounting for both natural convection heat transfer and radiation. Natural convection from a heated horizontal cylinder depends upon the product of the Grashof (Gr) and Prandtl (Pr) numbers. Following the approach developed by Jakob and Hawkins [3.2.8], GrPr is expressed as $L^3 \Delta T\ Z$, where L is the diameter of the cask, ΔT is the cask surface-to-ambient temperature differential and Z is a parameter which is a function of air properties evaluated at the average film temperature. The temperature dependence of Z for air is provided in Table 3.2.9.

The long-term thermal stability and radiation resistance of Holtite-B has been confirmed through qualification testing. The qualification test conditions exceed the Holtite-B thermal and radiation environment (gamma and neutron fluence) in the HI-STAR 180 cask. The Holtite-B thermal stability test temperature, [PROPRIETARY TEXT REMOVED] is well above the maximum operating temperature of Holtite-B (See Table 3.1.1). The Holtite-B radiation test exposures exceed the HI-STAR 180 5-year licensed life fluence under transport by a large factor (See Table 3.2.13). The Holtite-B qualification test data is archived in Reference [1.2.17]. The qualification testing confirms that Holtite-B does not degrade at elevated temperatures and Holtite-B is unaffected by high neutron fluence and megarad gamma doses. Even under very conservative assumptions (40-years of continuous exposure under the maximum operating temperature) a mere 2.6% weight loss is computed (licensing basis commitment is 5%). Because of the excellent stability characteristics of Holtite-B, its thermal properties remain essentially unchanged during the service life of the HI-

STAR cask (40 years). Nevertheless, to accord with the Regulator's leaning on this matter and also to provide an additional layer of assurance, periodic thermal testing of HI-STAR 180 is added to the HI-STAR 180 Acceptance Testing and Maintenance Program (See Chapter 8).

3.2.2 Component Specifications

The HI-STAR 180 Package materials and components which are required to be maintained below maximum pressure and temperature limits for safe operation, to ensure their intended functions, are summarized in Chapter 2 (Table 2.1.1) and Chapter 3 (Tables 3.2.10, 3.2.11 and 3.2.12). These materials and components do not degrade under exposure to extreme low temperatures. As defined by transport regulations, the HI-STAR 180 Package cold service temperature is conservatively limited to –40°C (-40°F).

Long-term stability of the neutron shield material (Holtite-B) under normal transport conditions is ensured when material exposure temperatures are maintained below the permissible limits. The cask metallic seals ensure leak tightness of the closure plates if the manufacturer's recommended design temperature limits are not exceeded. Integrity of SNF during transport requires demonstration of HI-STAR 180 Package fuel cladding temperatures below regulatory limits for Moderate Burnup Fuel (MBF) and High Burnup Fuel (HBF). In the HI-STAR 180 thermal evaluation, the cladding temperature limits of ISG-11, Rev. 3 [3.3.3] are adopted (See Table 3.2.11). These limits are applicable to all fuel types, burnup levels and cladding materials approved for power generation. Neutron absorber material (Metamic-HT) used for criticality control is stable in excess of 538°C (1000°F). For conservatism temperature limits well below the threshold of material integrity[†] are adopted (See Tables 3.2.10, 3.2.11 and 3.2.12).

For evaluation of the HI-STAR Package's thermal performance under hypothetical accident conditions, lowerbound material temperature limits for short-duration events are defined in Tables 3.2.10, 3.2.11 and 3.2.12.

[†] Neutron absorber materials are manufactured using B_4C and aluminum. B_4C is a refractory material that is unaffected by high temperatures and aluminum is solid at temperatures in excess of 538°C (1000°F).

HOLTEC INTERNATIONAL COPYRIGHTED MATERIAL

Table 3.2.1: Summary of HI-STAR Packaging Materials Thermal Property References

Material	Emissivity	Conductivity	Density	Heat Capacity
Helium	NA	Handbook [3.2.2]	Ideal Gas Law	Handbook [3.2.2]
Zircaloy Cladding	EPRI [3.2.3]	NUREG [3.2.6]	Rust [3.2.4]	Rust [3.2.4]
UO_2	Not Used	NUREG [3.2.6]	Rust [3.2.4]	Rust [3.2.4]
Carbon Steel	Kern [3.2.5]	ASME [3.2.7]	Marks [3.2.1]	Marks [3.2.1]
Aluminum Basket Shims	Test Data [1.2.27]	ASM [3.2.14]	ASM [3.2.14]	ASM [3.2.14]
Holtite-B	Not Used	Conservative lowerbound properties [1.2.17]		
Metamic-HT	Test Data [1.2.27]	Test Data [1.2.27]	Test Data [1.2.27]	Test Data [1.2.27]
Impact Limiter Crush Material	NA	Aluminum Honeycomb Test Data [3.2.13]	Aluminum Honeycomb Test Data [3.2.13]	Aluminum Honeycomb Test Data [3.2.13]

Table 3.2.2: Thermal Conductivity of HI-STAR 180 Cask Materials

Material	@ 93.3°C (200°F) W/m-°K (Btu/ft-hr-°F)	@ 232.2°C (450°F) W/m-°K (Btu/ft-hr-°F)	@ 371.1°C (700°F) W/m-°K (Btu/ft-hr-°F)
Helium	0.1686 (0.0976)	0.2227 (0.1289)	0.2722 (0.1575)
Carbon Steel	47.7 (27.6)	45.5 (26.3)	41.5 (24)
Cryogenic Steel	41.1 (23.8)	41.0 (23.7)	38.5 (22.3)
Impact Limiters[1]	[PROPRIETARY TEXT REMOVED]		
[PROPRIETARY TEXT REMOVED]	[PROPRIETARY TEXT REMOVED]		
[PROPRIETARY TEXT REMOVED]	[PROPRIETARY TEXT REMOVED]		

[1] Reasonably bounding values under normal and fire accident conditions are tabulated herein. During post-fire cooldown conductivity is understated (See Table 3.4.1).

HOLTEC INTERNATIONAL COPYRIGHTED MATERIAL

Table 3.2.3: Thermal Conductivity of Fuel Assembly Materials

Fuel Cladding		Fuel (UO_2)	
Temperature °C (°F)	Conductivity W/m-°K (Btu/ft-hr-°F)	Temperature °C (°F)	Conductivity W/m-°K (Btu/ft-hr-°F)
200 (392)	14.3 (8.28)	37.8 (100)	6.02 (3.48)
300 (572)	15.1 (8.76)	231.1 (448)	6.02 (3.48)
400 (752)	16.6 (9.60)	298.9 (570)	5.60 (3.24)
500 (932)	18.06 (10.44)	422.8 (793)	3.94 (2.28)

HOLTEC INTERNATIONAL COPYRIGHTED MATERIAL

Table 3.2.4: Thermal Conductivity of Aluminum (Basket Shims Material)

Material	Conductivity W/m-°K (Btu/ft-hr-°F)
[PROPRIETARY TEXT REMOVED]	120 (69.3)

HOLTEC INTERNATIONAL COPYRIGHTED MATERIAL

Table 3.2.5: [PROPRIETARY TEXT REMOVED]

HOLTEC INTERNATIONAL COPYRIGHTED MATERIAL

Table 3.2.6: [PROPRIETARY TEXT REMOVED]

HOLTEC INTERNATIONAL COPYRIGHTED MATERIAL

Table 3.2.7: [PROPRIETARY TEXT REMOVED]

[2] Obtained from Rohsenow and Hartnett [3.2.2].

HOLTEC INTERNATIONAL COPYRIGHTED MATERIAL

Table 3.2.8: Helium Gas Viscosity Variation with Temperature[2]

Temperature (°F)	Viscosity (Micropoise)
167.4	220.5
200.3	228.2
297.4	250.6
346.9	261.8
463.0	288.7
537.8	299.8
737.6	338.8

HOLTEC INTERNATIONAL COPYRIGHTED MATERIAL

Table 3.2.9: Variation of Natural Convection Properties Parameter "Z" for Air with Temperature[1]

Temperature (°F)	Z (ft^{-3} $°F^{-1}$)
40	2.1×10^{6}
140	9.0×10^{5}
240	4.6×10^{5}
340	2.6×10^{5}
440	1.5×10^{5}

[1] Obtained from Jakob and Hawkins [3.2.8].

Table 3.2.10: HI-STAR 180 Structural Materials Temperature Limits

	Material	Normal Condition Temperature Limits[a] °C (°F)	Short Term Operations & Accident Temperature Limits[a] °C (°F)
Fuel Basket	Metamic-HT	[PROPRIETARY TEXT REMOVED]	[PROPRIETARY TEXT REMOVED]
Basket Shims	Aluminum Alloy	260 (500)[c]	371 (700)[e]
Containment Shell, Baseplate and Closure Flange	Cryogenic Steel	204 (400)[c]	371 (700)[d]
[PROPRIETARY TEXT REMOVED]Closure Lid	Cryogenic Steel	204 (400)[c]	371 (700)[d]
[PROPRIETARY TEXT REMOVED]	Carbon Steel	204 (400)[c]	371 (700) (Structural accidents)[d] 788 (1450) (Fire accident)[e]

Notes

(a) The ASME Code requires that the vessel design temperature be established with appropriate consideration of internal or external heat generation. In accordance with ASME Section III Code, Para. NCA-2142 the design temperature is set at or above the structural members' section temperature defined as the maximum through thickness mean metal temperature of the part under consideration. The section temperatures of the structural members shall not exceed the temperatures limits tabulated herein.
(b) The temperature limits of Metamic-HT are bounded by the maximum material qualification test temperatures [1.2.27].
(c) The normal condition temperature limits conservatively bound the ASME Code temperature limits.
(d) The accident temperatures of structural members must not exceed the ASME code temperature limits.
(e) To preclude melting the short term and fire accident temperature limits are set well below the melting temperature of structural steel, Metamic-HT and Aluminum Alloys.

HOLTEC INTERNATIONAL COPYRIGHTED MATERIAL

Table 3.2.11: Fuel Cladding Temperature Limits

Component	Material	Normal Condition Temperature Limits °C (°F)	Short Term Operations & Accident Temperature Limits °C (°F)
Fuel Cladding (Moderate Burnup Fuel)	See Note 1	400 (752)	570 (1058)
Fuel Cladding (High Burnup Fuel)	See Note 1	400 (752)	400 (752) (Short Term Operations) 570 (1058) (Accident)

Notes

1. Fuel cladding temperature limits are applicable to all cladding materials approved for power generation [3.3.3].

Table 3.2.12: HI-STAR 180 Component Temperature Limits

Component	Material	Normal Condition Temperature Limits °C (°F)	Short Term Operations & Accident Temperature Limits °C (°F)
[PROPRIETARY TEXT REMOVED]Seals	Note 1	371 (700)	371 (700)
Closure Lid Port Cover and Port Plug Seals	Note 1	371 (700)	371 (700)
Neutron Shield	Holtite-B	[PROPRIETARY TEXT REMOVED]	Note 2
Impact Limiter Bulk	[PROPRIETARY TEXT REMOVED]	Table 2.2.10	596 (1105)[Note 3]
Notes [PROPRIETARY TEXT REMOVED]			

HOLTEC INTERNATIONAL COPYRIGHTED MATERIAL

Table 3.2.13: [PROPRIETARY TEXT REMOVED]

3.3 THERMAL EVALUATION UNDER NORMAL CONDITIONS OF TRANSPORT

The HI-STAR 180 package is designed to safely dissipate heat under passive conditions (no wind). Under normal transport conditions, the cask contents (fuel basket, fuel and Aluminum basket shims) rest on solid surfaces. Direct contact between the cask and its contents enhances heat dissipation. Nevertheless to engineer a robust measure of conservatism a hypothetical bounding configuration (levitating fuel basket) is assumed. Under this assumption, the fuel, fuel basket, basket shims and cask are in concentric alignment (i.e. they do not make physical contact).

The HI-STAR 180 package consists of two distinct fuel basket geometries, the F-32 and F-37 designs engineered to hold 32 and 37 PWR fuel assemblies. The cask is rated for the same heat load for both basket types. Apart from their storage capacity, the two fuel basket designs are similar with respect to the basket material (Metamic-HT), basket construction ([PROPRIETARY TEXT REMOVED]) and thickness of the Metamic-HT plates. From a thermal-hydraulic standpoint both the two fuel baskets give similar cask and fuel temperatures. However as somewhat higher temperatures are reached in the F-32 basket (See Table 3.3.4) an F-32 equipped HI-STAR 180 package is evaluated for compliance with transport regulations.

The HI-STAR 180 package thermal analysis is performed using the FLUENT CFD code [3.3.2]. FLUENT is a well-benchmarked CFD code validated by the code developer with an array of theoretical and experimental works from technical journals. Additionally, Holtec has Q.A. validated FLUENT within the company's quality assurance program and confirmed the code's capability to reliably predict temperature fields in dry storage [3.3.4] using independent full-scale test data from a loaded cask [3.2.3]. The code has a long history of usage for obtaining NRC approval of fuel storage in transport and storage casks. A list of dockets wherein USNRC relied on FLUENT thermal models for cask certification is given in Table 3.3.3.

The HI-STAR 180 cask is designed to allow fuel loading under uniform and regionalized loading conditions. The aggregate cask decay heat under uniform or regionalized storage is limited to 32 kW. Under uniform loading, every storage cell is loaded with fuel emitting heat at the maximum permissible level. Under regionalized loading, the fuel storage cells (Figures 1.2.3 and 1.2.4) are grouped in eight regions (Table 1.2.6) and regionalized fuel decay heat limits are defined in Tables 1.2.8 and 1.2.9 under an array of fuel loading patterns A through F (F-32 basket) and A through D (F-37 basket). As explained next, the fuel loading patterns optimize shielding and thermal design of the HI-STAR 180 package. The fuel decay heat limits are defined to permit High Heat High Gamma dose (HHHG) UO_2 fuel storage in the shielded interior storage locations and High Heat Low Gamma dose (HHLG) MOX fuel (upto 4 fuel assemblies) in the peripheral Region 1 basket locations. To define a limiting pattern, an array of bounding fuel storage configurations is analyzed using 3D thermal models of the F-32 and F-37 baskets. The maximum permissible cask heat load (Tables 1.2.3, 1.2.8 and 1.2.9) is assumed in the pattern screening analyses. The bounding configurations are constructed by conservatively assuming the interior cells are populated with HHHG fuel and the Region 1 peripheral fuel storage locations are populated with HHLG fuel. The balance of cask decay heat is uniformly distributed in the remaining peripheral cells. The results of pattern screening evaluation are presented in Table 3.3.4. As highlighted in Table 3.3.4 the highest cladding temperatures are reached in regionalized heat load distribution corresponding to F-32 fuel loading

patterns A and B[1].For the HI-STAR 180 thermal evaluation, the heat distribution of one bounding pattern A in the F-32 fuel basket is analyzed in detail. Modeling details of the principal thermal transport mechanisms are provided in the following.

Fuel Region Effective Planar Conductivity

In the HI-STAR 180 thermal modeling, the cross section bounded by the inside of a storage cell is replaced with an "equivalent" square section characterized by an effective thermal conductivity in the planar and axial directions. Figure 3.3.1 pictorially illustrates this concept. The two conductivities are unequal because while in the planar direction heat dissipation is interrupted by inter-rod gaps, in the axial direction heat is dissipated through a continuous medium (fuel cladding). The equivalent planar conductivity of the storage cell space is obtained using a 2D conduction-radiation model of the [PROPRIETARY TEXT REMOVED] fuel [PROPRIETARY TEXT REMOVED]. The fuel geometry is constructed using the ANSYS code [3.3.1]. The finite-element model, consisting of an array of fuel rods with helium gaps between them residing in a storage cell is illustrated in Figure 3.3.2. In the axial direction, an area-weighted average of the cladding and helium conductivities is computed.

The fuel region effective conductivity is defined as the calculated equivalent conductivity of the fuel storage cell by including conduction and radiation heat transfer. Because radiation is proportional to the fourth power of absolute temperature, the effective conductivity is a strong function of temperature. The ANSYS finite element model is used to characterize fuel resistance at several representative storage cell temperatures and the effective thermal conductivity as a function of temperature obtained and presented in Table 3.3.1.

Heat Rejection from Cask and Impact Limiter Surfaces

The exposed surfaces of the HI-STAR 180 package dissipate heat by radiation and external natural convection heat transfer. [PROPRIETARY TEXT REMOVED]

Determination of Solar Heat Input

The intensity of solar radiation incident on exposed surfaces depends on a number of time varying parameters. The solar heat flux strongly depends upon the time of the day as well as on latitude and day of the year. Also, the presence of clouds and other atmospheric conditions (dust, haze, etc.) can significantly attenuate solar intensity levels. In the interest of conservatism, the solar attenuation effects of dust, haze, angle of incidence and latitude are neglected.

The insolation energy absorbed by the HI-STAR 180 Package is the product of incident insolation and the package absorbtivity[2]. The HI-STAR package thermal analysis is based on 12-hour daytime insolation specified in 10CFR71. During normal transport conditions, the HI-STAR package is

[1] The heat load distribution in fuel loading patterns A and B are identical.
[2] In accordance with classical radiation principles absorbtivity equal to the emissivity is applied to the package surfaces.

cyclically subjected to solar heating during the 12-hour daytime period followed by cooling during the 12-hour nighttime. However, due to the large mass of metal and the size of the package, the dynamic time lag exceeds the 12-hour heating period. Accordingly, the HI-STAR package model includes insolation at exposed surfaces averaged over a 24-hour time period. The 10CFR71 12-hour insolation is summarized in Table 3.3.2.

[PROPRIETARY TEXT REMOVED]

The HI-STAR 180 package thermal analysis is based on a 3D thermal model of the HI-STAR 180 cask that properly accounts radiation, conduction and external natural convection modes of heat transfer. The model is constructed using an array of conservative assumptions to bias the results of the thermal analysis towards much reduced computed margins. The thermal assumptions are listed below.

[PROPRIETARY TEXT REMOVED]

Sectional and isometric views of the HI-STAR 180 thermal model are presented in Figures 3.3.3 and 3.3.4, respectively.

To ensure a mesh independent thermal solution the thermal model of the bounding F-32 basket in the HI-STAR 180 cask is constructed using a large number of nodes [PROPRIETARY TEXT REMOVED] with particular attention to mesh density in areas of high thermal resistance. The nodal distributions in critical areas are given below:

[PROPRIETARY TEXT REMOVED]

To this model insolation heat (Table 3.3.2) is applied on all external surfaces of the HI-STAR 180 package assuming 100% absorption. Natural convection and radiation from exposed surfaces is enabled to model heat dissipation to ambient air. Using this model, steady state HI-STAR 180 Package temperatures in still air for the limiting decay heat distribution defined in Section 3.3 are computed and evaluated in the next section.

3.3.1 Heat and Cold

3.3.1.1 Maximum Temperatures

As required by transport regulations the HI-STAR 180 package is evaluated under hot ambient conditions defined in 10CFR71. These conditions are 38°C (100°F) ambient temperature, still air and insolation (Table 3.3.2). To ensure a bounding evaluation, design heat load and a limiting heat load distribution (See Section 3.1.2) are assumed. Under this array of adverse conditions, the maximum steady state temperature of the cask structural members and its contents (SNF) are computed. The temperatures are computed using the 3D thermal model described in Section 3.3 and results reported in Subsection 3.1.3. The following observations are derived by inspecting the temperature field obtained from the thermal analysis:

HOLTEC INTERNATIONAL COPYRIGHTED MATERIAL

- The maximum fuel cladding temperature is well within the ISG-11, Rev. 3 temperature limit (Table 3.2.11).
- The maximum temperature of fuel basket is well within the design temperatures (Table 3.2.10).
- The maximum temperatures of the containment boundary and lid seals (Table 3.1.1) are well below the design temperatures (Tables 3.2.10 and 3.2.12, respectively).
- The maximum temperatures of the aluminum basket shims (Table 3.1.1) are well below the design temperature limits (Table 3.2.10).
- The neutron shielding material (Holtite-B) temperature (Table 3.1.1) is well within its design limit (Table 3.2.12).

The temperatures of the HI-STAR 180 Package during normal transport are reported in Section 3.1.3. The temperatures are below the regulatory temperature limits (Table 3.2.11), ASME Code temperature limits (Table 3.2.10) and components safe operating temperature limits (Table 3.2.12). The above observations lead us to conclude that the temperature field in the HI-STAR 180 package loaded with heat emitting SNF complies with all regulatory requirements for normal conditions of transport. In other words, the thermal environment in the HI-STAR 180 package is conducive to safe transport of spent nuclear fuel.

3.3.1.2 Minimum Temperatures

As specified in 10CFR71, the HI-STAR 180 package is evaluated for a cold environment at -40°C (-40°F). The HI-STAR package design does not require minimum decay heat load restrictions for transport. Therefore zero decay heat load and no solar input are bounding conditions for cold evaluation. Under these conditions, the temperature distribution in the HI-STAR 180 package uniformly approaches the cold ambient temperature. All HI-STAR 180 package materials of construction satisfactorily perform their intended function in the transport mode at this minimum postulated temperature condition. Evaluations in Chapter 2 demonstrate the acceptable structural performance of the cask materials at low temperature. The HI-STAR 180 shielding and criticality materials (Holtite-B and Metamic-HT) are unaffected by exposure to cold temperatures.

3.3.1.3 Personnel Barrier Evaluation

As defined in Chapter 1, the personnel barrier is an open lattice cage placed around the HI-STAR 180 cask to prevent access to the hot surfaces (See Figure 1.3.2). The open structure ensures that movement of ambient air is not unduly restricted and the cask temperatures are not impacted. To provide an additional layer of assurance a thermal calculation was performed assuming bounding personnel barrier characteristics defined in Table 3.3.7. The thermal calculation deployed the same 3D HI-STAR 180 thermal model articulated in this section except for the inclusion of an enveloping porous cylinder having the flow resistance characteristics of the personnel barrier defined in Table 3.3.7. The cask temperatures with and without the personnel barrier are tabulated in Table 3.3.8. The results show that the cask temperatures are essentially unchanged by the deployment of the personnel barrier.

3.3.1.4 Basket Shims Gap Sensitivity Evaluation

i) The HI-STAR 180 cask is engineered with aluminum shims installed between the fuel basket and containment shell. [PROPRIETARY TEXT REMOVED]

The results of the analyses are tabulated in Table 3.3.9. The results exhibit small variations in the cask and fuel temperatures to shims gap assumptions. All temperatures are within the safe operating limits of the HI-STAR 180 cask.

3.3.1.5 Basket Shims Creep Evaluation

Basket shims creep is evaluated in Structural Evaluation Chapter 2, Section 2.2.

3.3.2 Maximum Normal Operating Pressure (MNOP)

The HI-STAR 180 cavity is de-moisturized and backfilled with dry helium after fuel loading and prior to lid closures. The MNOP evaluation considers the following source of gases:

Initial Backfill:
The HI-STAR 180 cavity is assumed to be backfilled to the maximum permissible pressure limit (Table 1.2.1).

Water Vapor:
The HI-STAR 180 cavity and its stored fuel are de-moisturized to a very low vapor pressure (less than 3 torr). As this pressure is dwarfed by the helium backfill pressure it is neglected in the MNOP calculations.

Helium from radioactive decay:
The helium from radioactive decay is dwarfed by the generation of fission products during power generation. These products are assumed to be released into the HI-STAR 180 cavity under hypothetical rod ruptures. As radioactive decay is a small fraction of the fission gas releases it is neglected in the MNOP calculations.

Generation of flammable gases:
The HI-STAR 180 package uses non-reactive materials of construction. Generation of flammable gases is not credible.

Fuel Rod Failures:
In accordance with NUREG 1617, 3% of the fuel rods are assumed to be breached.

During normal transport conditions, the gas temperature within the cavity rises to its maximum operating temperature as determined by the thermal evaluation described earlier. The gas pressure inside the cavity increases monotonically with rising temperature. The pressure rise is determined using the Ideal Gas Law.

The HI-STAR 180 Maximum Normal Operating Pressure (MNOP) is calculated for the §71.71(c)(1) heat condition (38°C (100°F) ambient, still air & insolation) and design heat load. Based on a 30% release of the significant radioactive gases and 100% release of the rod fill gas from postulated cladding breaches (3%) the MNOP is computed and reported in Subsection 3.1.4. The HI-STAR 180 cavity pressures presented in Table 3.1.2 show that the MNOP is well below the design pressure of the containment boundary (Table 2.1.1).

The evaluation of pressures and temperatures reached during transport provides reasonable assurance of safe transport of spent nuclear fuel packaged in a HI-STAR 180 package. This conclusion is based on the technical data and analyses presented in this chapter in conjunction with provisions of 10 CFR Part 71, appropriate regulatory guides, applicable codes and standards, and accepted engineering practices.

3.3.3 Time-to-Boil Limits

In accordance with NUREG-1536, water inside the HI-STAR 180 cavity is not permitted to boil during fuel loading operations. In this manner operational concerns due to vapor formation and two-

phase conditions are avoided. To meet this requirement time limits are defined herein for completion of wet operations upon removal of a loaded HI-STAR 180 cask from the pool.

When the HI-STAR 180 cask is removed from the pool, the combined water, fuel and cask metal mass absorb the decay heat emitted by the fuel assemblies. This results in a slow temperature rise of the cask with time, starting from an initial temperature of the contents. The rate of temperature rise is limited by the thermal inertia of the HI-STAR 180. To ensure a bounding heat-up rate determination, the thermal model assumes the following:

i. Design heat input from the fuel assemblies is applied to the cask.
ii. Heat dissipation to air by natural convection and radiation from the cask is neglected.
iii. Water mass in the cask cavity is understated.

The rate of temperature rise of the cask under adiabatic heat up (assumption (ii) above) is computed as follows:

$$\frac{dT}{dt} = \frac{Q}{C_h}$$

where:

Q = cask heat load, W (Btu/hr) (Table 1.2.3)
C_h = thermal inertia of the loaded cask, J/°C (Btu/°F)
T = cask temperature, °C (°F)
t = time after loaded cask is removed from the pool, s (hr)

The maximum permissible time duration, t_{max} for fuel to be submerged in water is computed as follows:

$$t_{max} = \frac{T_{boil} - T_{initial}}{(dT/dt)}$$

where:

T_{boil} = lowerbound boiling temperature of water (100°C (212°F) at the water surface)
$T_{initial}$ = initial cask temperature (pool temperature during in-pool fuel loading operations)

Table 3.3.5 provides a summary of t_{max} at several representative $T_{initial}$ temperatures.

3.3.3.1 Additional Measures During Extended Duration Operations

In the unlikely event that the maximum allowable time provided in Table 3.3.5 is found to be insufficient to complete wet transfer operations, forced water circulation must be provided to remove the decay heat from the cask cavity. During forced circulation relatively cooler water enters the inner closure lid drain port connection and heated water exits from the vent port. The minimum water flow rate required to maintain the water temperature below boiling is determined as follows:

$$M_W = \frac{Q_c}{C_{pW}\,(T_{max} - T_{in})}$$

where:

Q_c = cask decay heat, W (Btu/hr)
M_W = minimum water flow rate, kg/s (lb/hr)
C_{pw} = water heat capacity, J/kg-°C (Btu/lb-°F)
T_{max} = cask user selected maximum cavity water temperature, °C (°F) (must be less than 100°C (212°F))
T_{in} = water supply temperature, °C (°F)

3.3.4 Fuel Temperatures During Moisture Removal Operations

The initial loading of SNF in the HI-STAR 180 requires that the water within the cask cavity be drained and replaced with helium. For casks containing moderate burnup fuel assemblies only, this operation may be carried out using the conventional vacuum drying approach. In this method, evaluated in Subsection 3.3.4.1, removal of the last traces of residual moisture from the HI-STAR 180 is accomplished by evacuating the cavity after draining the cask. To avoid thermal cycling and ISG 11 temperature limits exceedance concerns vacuum drying of casks loaded with high burnup fuel assemblies is not permitted. High burnup fuel drying is performed by a forced flow helium drying process described in Subsection 3.3.4.2.

3.3.4.1 Vacuum Drying

Prior to the start of the HI-STAR 180 draining operation, both the cask cavity is flooded with water. The presence of water in the cask cavity ensures that the fuel cladding temperatures are lower than design basis limits by large margins. As the heat generating active fuel length is uncovered during the draining operation, the fuel and basket mass undergo a gradual heat up from the initially cold conditions when the heated surfaces were submerged under water. Following the draining operation the HI-STAR 180 cavity is lined up to vacuum pump and the cavity pressure substantially lowered to facilitate fuel drying. To bound the fuel temperatures during vacuum drying a thermal model is conservatively articulated with the following assumptions:

1) Design heat load and a bounding decay heat distribution pattern defined in Section 3.3 are assumed.
2) The cask and the loaded fuel are assumed to have reached asymptotic steady state temperatures.
3) The cask bottom is assumed to be insulated.
4) The cask is assumed to be placed in still air and hot (38°C (100°F)) ambient temperature.

The results of thermal evaluation are presented in Table 3.3.6. The results show that the maximum fuel cladding temperature is below the ISG 11 temperature limits with robust margins.

HOLTEC INTERNATIONAL COPYRIGHTED MATERIAL

3.3.4.2 Forced Helium Dehydration

Demoisturization of the HI-STAR 180 cask loaded with high burnup fuel is conducted by the Forced Helium Dehydration (FHD) system. The FHD is a conventional, closed loop dehumidification system consisting of a condenser, a demoisturizer, a compressor, and a pre-heater. The FHD is utilized to extract moisture from the HI-STAR 180 cavity through forced circulation of dry heated helium. During fuel drying operations the FHD system provides concurrent fuel cooling by forced convection heat transfer. The enhanced heat transfer occurring during operation of the FHD system ensures that the fuel cladding temperature will remain well below the peak cladding temperatures under normal conditions of transport, which is below the high burnup cladding temperature limit 400°C (752°F) for all combinations of SNF type, burnup, decay heat, and cooling time authorized for loading in the HI-STAR 180 cask. Because the FHD operation induces a state of forced convection heat transfer in contrast to the quiescent mode of cooling under normal transport it is readily concluded that the peak fuel cladding temperature under the latter condition will be greater than that during the FHD operation phase. In the event that the FHD system malfunctions, the forced convection state will degenerate to natural convection in the vertical orientation, which bounds the condition of normal transport in the horizontal orientation. As a result, the peak fuel cladding temperatures will approximate the values reached during normal transport as described elsewhere in this chapter.

HOLTEC INTERNATIONAL COPYRIGHTED MATERIAL

Table 3.3.1: [PROPRIETARY TEXT REMOVED]**Fuel Effective Conductivities**

Temperature °C (°F)	Conductivity W/m-°C (Btu/ft-hr-°F)
Planar Conductivity	
93 (200)	0.443 (0.256)
232 (450)	0.758 (0.438)
371 (700)	1.198 (0.692)
Axial Conductivity	
93 (200)	1.187 (0.686)
232 (450)	1.325 (0.765)
371 (700)	1.494 (0.863)

HOLTEC INTERNATIONAL COPYRIGHTED MATERIAL

Table 3.3.2: 10CFR71 Insolation Data

Surface Type	12-Hour Insolation	
	(g-cal/cm^2)	(W/m^2)
Horizontally Transported Flat Surfaces		
- Base	None	None
- Other Surfaces	800	774.0
Non-Horizontal Flat Surfaces	200	193.5
Curved Surfaces	400	387.0

HOLTEC INTERNATIONAL COPYRIGHTED MATERIAL

Table 3.3.3: History of FLUENT for Securing Transport and Storage Cask Certifications

USNRC Docket Number	Project
72-1008	HI-STAR 100 Storage
71-9261	HI-STAR 100 Transport
72-1014	HI-STORM Storage
72-22	Private Fuel Storage Facility
72-27	Humboldt Bay ISFSI
72-26	Diablo Canyon ISFSI
72-17	Trojan ISFSI

HOLTEC INTERNATIONAL COPYRIGHTED MATERIAL

Table 3.3.4: [PROPRIETARY TEXT REMOVED]

Table 3.3.5: [PROPRIETARY TEXT REMOVED]

HOLTEC INTERNATIONAL COPYRIGHTED MATERIAL

Table 3.3.6: Maximum Cladding Temperature Under Vacuum Drying Operation

Temperature, °C (°F)	Temperature Limit, °C (°F)[Note 1]
[PROPRIETARY TEXT REMOVED]	**570 (1058)**
Note 1: ISG 11 temperature limit of Moderate Burnup Fuel under vacuum drying operations is tabulated herein. Demoisturization of High Burnup Fuel by the vacuum drying method is not permitted. Demoisturization of High Burnup Fuel is addressed in Section 3.3.4.	

HOLTEC INTERNATIONAL COPYRIGHTED MATERIAL

Table 3.3.7: [PROPRIETARY TEXT REMOVED]

HOLTEC INTERNATIONAL COPYRIGHTED MATERIAL

Table 3.3.8: [PROPRIETARY TEXT REMOVED]

HOLTEC INTERNATIONAL COPYRIGHTED MATERIAL

Table 3.3.9: [PROPRIETARY TEXT REMOVED]

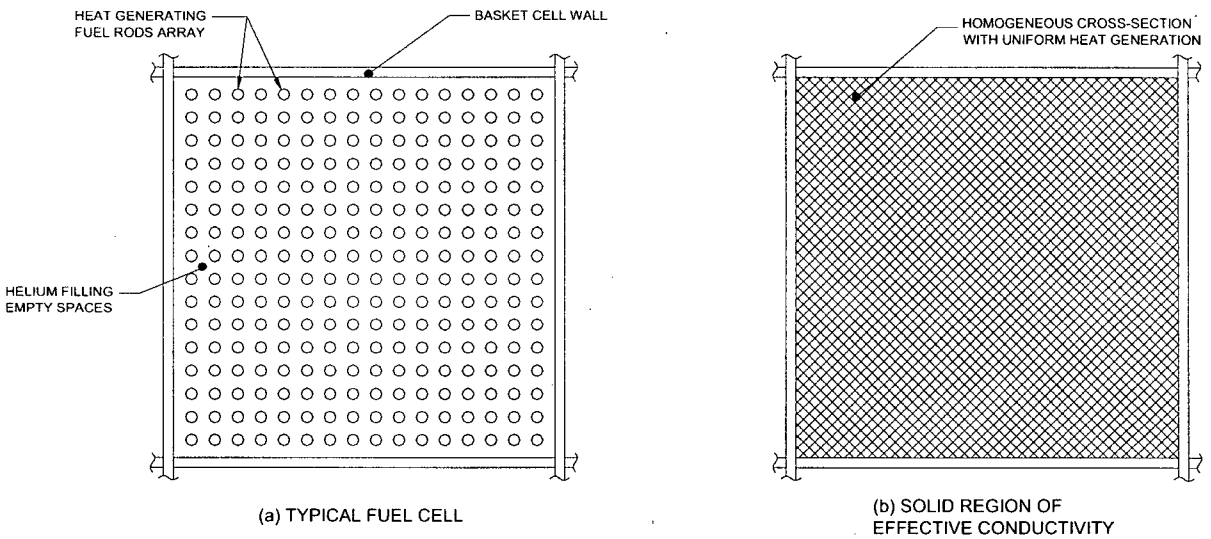

FIGURE 3.3.1: HOMOGENIZATION OF THE STORAGE CELL CROSS-SECTION

HOLTEC INTERNATIONAL COPYRIGHTED MATERIAL

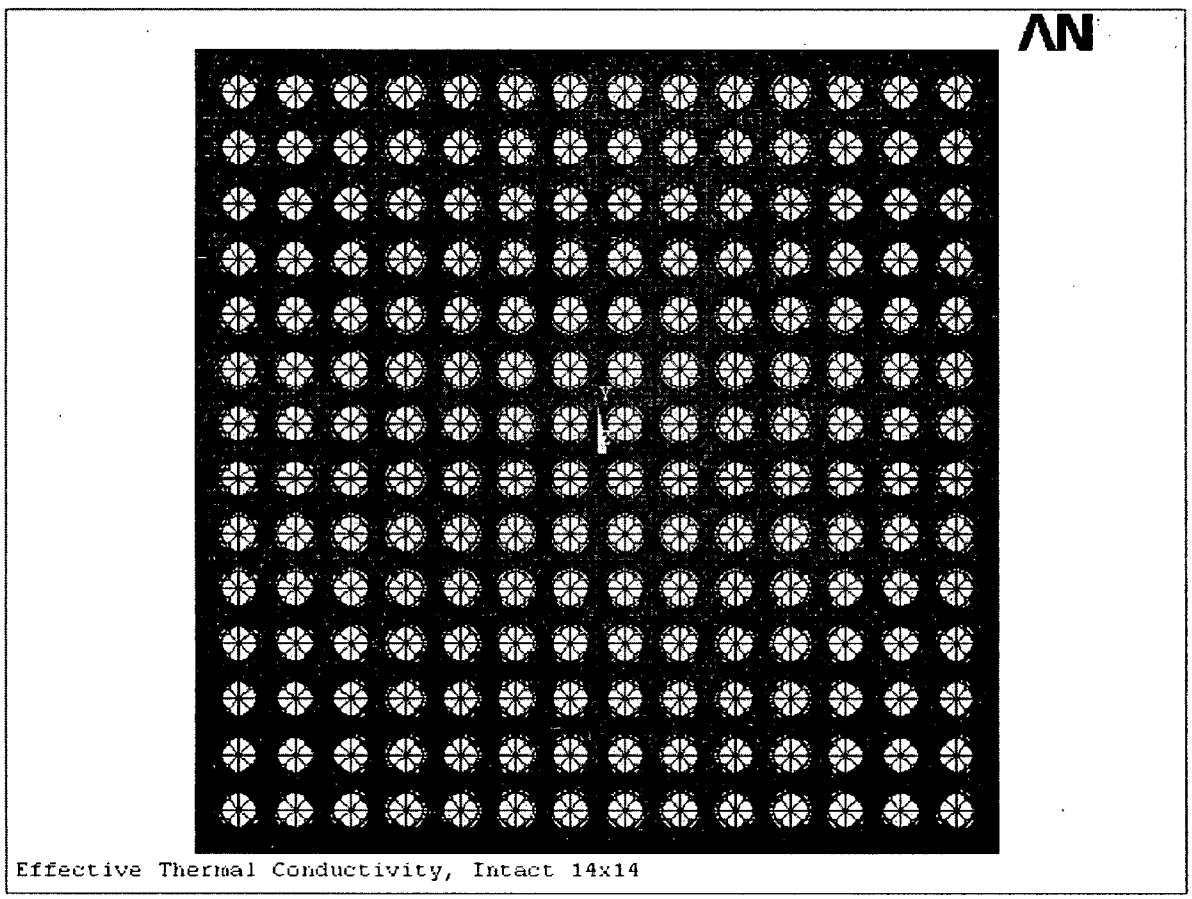

FIGURE 3.3.2: FINITE ELEMENT MODEL OF THE PWR 14x14 FUEL ASSEMBLY

HOLTEC INTERNATIONAL COPYRIGHTED MATERIAL

THIS FIGURE IS PROPRIETARY IN ITS ENTIRETY

FIGURE 3.3.3: [PROPRIETARY TEXT REMOVED]

HOLTEC INTERNATIONAL COPYRIGHTED MATERIAL

THIS FIGURE IS PROPRIETARY IN ITS ENTIRETY

FIGURE 3.3.4: [PROPRIETARY TEXT REMOVED]

3.4 THERMAL EVALUATION UNDER HYPOTHETICAL ACCIDENT

As mandated by 10 CFR Part 71 requirements, the HI-STAR 180 package under the limiting F-32 fuel basket thermal loading is subjected to a sequence of hypothetical accidents. The objective is to determine and assess the cumulative damage sustained by the package. The accident scenarios specified in order are: (1) a 9 m (30 foot) free drop onto an unyielding surface; (2) a 1 m (40-inch) drop onto a mild steel bar; (3) exposure to a 30-minute fire at 802°C (1475°F) and (4) immersion under a 0.9 m (3 ft) head of water. The initial conditions for the fire accident specify steady state at an ambient temperature between -29°C (-20°F) and 38°C (100°F). In the HI-STAR 180 Package hypothetical fire accident evaluation, insolation is assumed during all phases of the fire accident (before, during and post-fire). The effects of the accidents (1), (2) and (4) are evaluated in Chapter 2. In this section, the effects of accident (3) are evaluated. The initial condition prior to fire accident is the hot ambient environment for normal transport and design heat load (See Section 3.3). The fire accident evaluation is performed assuming an adverse combination of factors that overestimate heat input during fire followed by an underestimation of heat rejection to the environment after the fire.

During drop and puncture accidents some neutron shield [PROPRIETARY TEXT REMOVED]can rupture thereby reducing the ability of the package to reject heat after the fire. To bound this hypothetical accident condition, the neutron shield thermal conductivity is assumed during fire to maximize heat input and thermal conductivity of air is applied to the neutron shield pockets during post-fire cooldown to minimize post-fire cooling. During drop events the honeycomb material in the impact limiter is locally crushed. However, the impact limiters survive the drop events without structural collapse and remain attached to the cask during and after the event. During a puncture event the cask's exterior shell may be locally pierced but with no gross damage to the cask or its internals. Because of these reasons the global thermal performance of the HI-STAR 180 cask is unaffected by the drop events.

During fire some portions of the neutron shield will be exposed to high temperatures. In computing the heat input to the package during fire the undegraded neutron shield thermal conductivity is assumed. During the post-fire cooldown phase, thermal conductivity of air is applied to the neutron shield [PROPRIETARY TEXT REMOVED] to minimize heat dissipation and thermal inertia properties of undegraded neutron shield material is assumed to maximize fire accumulated thermal energy. During fire a 10 CFR Part 71 mandated cask surface absorbtivity is assumed to maximize radiant heat input to the cask.
During fire the resin bonding the impact limiter's corrugated aluminum honeycomb layers is destroyed thus severely degrading the normal-to-layers direction conductivity. In the interest of conservatism the undegraded honeycomb conductivity is assumed during fire to maximize heat input and an opposite assumption is used to minimize post-fire heat dissipation by applying air conductivity for the normal-to-layers direction (see Table 3.4.1).

The temperature history of the HI-STAR package is monitored during the 30-minute fire and during post-fire cooldown for a sufficient length of time for the cask and fuel to reach maximum temperatures. The impact of transient temperature excursions on HI-STAR package materials is evaluated.

3.4.1 Initial Conditions

In accordance with transport regulations the HI-STAR 180 package fire accident is evaluated under hot ambient initial conditions (§10CFR71.71(c)(1) and §10CFR71.73(b)). These conditions are 38°C (100°F) ambient temperature, still air and insolation. The HI-STAR 180 bounding steady state temperature distribution under hot ambient conditions reported in Section 3.1.3 is adopted as the initial condition for fire accident evaluation.

3.4.2 Fire Conditions

As required by transport regulations the HI-STAR 180 package is evaluated under an all-engulfing fire at 802°C (1475°F) lasting for 30 minutes (§10CFR71.73(c)(4)). The regulations specify a minimum fire emissivity (0.9) and lowerbound package absorbtivity (0.8) for hypothetical accident evaluation. In the HI-STAR 180 fire accident evaluation, the minimum specified emissivity and conservatively postulated absorbtivity are adopted.

Heat input to the HI-STAR 180 package while engulfed in a fire is from a combination of radiation and forced convection heat transfer. This can be expressed by the following equation:

$$q_F = h_{fc}(T_F - T_s) + \sigma\alpha\,\varepsilon\,[T_F^4 - T_s^4]$$

where:

- q_F = fire heat input, W/m^2 (Btu/ft^2-hr)
- T_F = fire condition temperature 1075°K (1935°R)
- T_S = package surface temperature °K (°R)
- h_{fc} = forced convection heat transfer coefficient W/m^2-°K [Btu/ft^2-hr-°F] (See Table 3.4.3)
- ε = flame emissivity (= 0.9)
- α = package absorbtivity
- σ = Stefan-Boltzmann Constant 5.67x10-8 W/m^2-°K^4 (0.1714×10^{-8} Btu/ft^2-hr-°R^4)

For conservatism, the reported Sandia large pool fires forced convection heat transfer coefficient (See Table 3.4.3) is adopted. In Table 3.4.1 the principal fire accident assumptions are summarized.

The HI-STAR 180 package fire accident analysis is based on a 3D thermal model that properly accounts for radiation, conduction and natural convection modes of heat transfer. The thermal model incorporates several conservative assumptions listed below.

1. The undegraded neutron shield conductivity is assumed during fire to maximize heat input to the cask body.
2. To maximize initial temperatures, the limiting decay heat pattern defined in Section 3.3 and bounding (steady state) temperatures are assumed.
3. To maximize the rate of heat input from the ends during fire the undegraded conductivity of impact limiters aluminum honeycomb material is assumed (See Table 3.4.1).
4. To maximize fire heating of the cask, an all-engulfing fire, a high flame emissivity ($\varepsilon = 0.9$) and a theoretically bounding package absorbtivity are assumed.

5. To minimize heat dissipation from the cask during post fire cooldown, the thermal conductivity of air is applied to the neutron shield [PROPRIETARY TEXT REMOVED] is assumed.
6. The Sandia laboratories reported forced convection heat transfer during large pool fires (See Table 3.4.3) is adopted.
7. To maximize fire accumulated thermal energy the thermal inertia properties of undegraded neutron shield and Aluminum honeycomb materials are assumed during post fire cooldown.

Using this model, the transient heat up of the cask and it's internals during the 30-minute fire is computed. At the end of the fire the hot ambient condition is restored and a post fire cooldown of the cask for a period of 22 hrs is computed. As shown in Figure 3.4.1, this period is sufficient for the cask internals (principally the SNF) to reach their maximum temperatures and begin to recede. The results of the analysis are evaluated in the next section.

3.4.3 Maximum Temperatures and Pressures

3.4.3.1 Maximum Temperatures

The HI-STAR 180 package is evaluated under a hypothetical fire accident at 802°C (1475°F) lasting for 30 minutes. To ensure a bounding evaluation, the limiting decay heat pattern (See Subsection 3.1.2) and hot initial conditions are assumed. Under this array of adverse conditions, the maximum temperatures reached in the cask structural members and its contents (SNF) are computed. The temperatures are computed using the 3D thermal model described in Section 3.3, applying the fire accident thermal loads and computing the time-dependent response of the package to the 30-minute fire followed by a post fire cooldown for a sufficient duration to allow the cask and its contents to reach their maximum temperatures. The results of the critical components (cladding, basket, seals and containment shell) are graphed in Figure 3.4.1 and maximum temperatures reached during fire and post-fire cooldown are reported in Subsection 3.1.3. The following observations are derived by inspecting the temperature field obtained from the thermal analysis:

- The maximum fuel cladding temperature (Table 3.1.3) is well within the ISG-11, Rev. 3 accident temperature limit (Table 3.2.11).

- The maximum temperature of fuel basket is well within its accident design temperature (Table 3.2.10).

- The maximum temperatures of the containment boundary and lid seals (Table 3.1.3) are well below the ASME Code limits (Tables 3.2.10 and 3.2.12, respectively).

- The maximum temperatures of the aluminum basket shims (Table 3.1.3) are well below the accident temperature limits (Table 3.2.10).

- The maximum temperatures of the lid seals (Table 3.1.3) are well below the accident temperature limit (Table 3.2.12).

The HI-STAR 180 Package fire accident temperatures are reported in Section 3.1.3. The temperatures are below the regulatory temperature limits (Table 3.2.11), ASME Code temperature limits (Table 3.2.10) and components safe operating temperature limits (Table 3.2.12). The thermal evaluation provides reasonable assurance of safety in the event of a fire. This conclusion is based on the technical data and analyses presented in this chapter in conjunction with provisions of 10 CFR Part 71, appropriate regulatory guides, applicable codes and standards, and accepted engineering practices.

3.4.3.2 Maximum Pressures

The HI-STAR 180 containment pressure is computed based on the maximum temperatures of the cask contents (fuel basket and fuel) reached during the fire accident. The calculations use an array of conservative assumptions listed below:

i) Maximum initial fill pressure (See Table 1.2.1)
ii) 100% rods rupture
iii) 100% release of rods fills gas and 30% release of fission gases
iv) Lowerbound cavity free volume

The maximum containment pressures are tabulated in Subsection 3.1.4. The results show that the pressures are well below the containment boundary design pressure (Table 2.1.1).

3.4.4 Maximum Thermal Stresses

The HI-STAR 180 package is designed to ensure a low state of thermal stress in the structural members. This is ensured by using high conductivity materials (Metamic- HT and low alloy steels) to minimize temperature gradients and large fit-up gaps to allow unrestrained thermal expansion of the cask internals (fuel basket) during normal transport. The differential thermal expansion of the fuel basket during normal transport is calculated in Reference [3.4.1] and results provided in Table 3.4.2. The normal transport gaps are bounding during fire because of the expansion of the cask body under direct fire heating. As thermal interference is precluded during fire a low state of thermal stress prevails in the cask.

3.4.5 Accident Condition for Fissile Material Package for Air Transport

Not applicable as transport of package by air is not requested.

Table 3.4.1: Hypothetical Fire Accident Assumptions

	Initial Condition	30-minute Fire	Post-Fire Equilibrium
1. Neutron shield conduction	Yes (Understated Conductivity)	Yes (Undegraded material Conductivity)	No (Air conductivity applied to the neutron shield [PROPRIETARY TEXT REMOVED])
2. Insolation	Yes	Yes	Yes
3. Surface Convection	Natural	Forced	Natural
4. Impact limiter conduction[Note A] Parallel to Aluminum Layers Normal to Aluminum Layers	 Table 3.2.2 Table 3.2.2	 Table 3.2.2 Table 3.2.2	 Table 3.2.2 Air conductivity
5. Solar Absorbtivity	0.85	0.9	0.85
[PROPRIETARY TEXT REMOVED]			

HOLTEC INTERNATIONAL COPYRIGHTED MATERIAL

Table 3.4.2: [PROPRIETARY TEXT REMOVED]

Table 3.4.3: Sandia Pool Fire Test Data[1]

Test equipment	3 m (10 ft) OD propane railcar
Fuel	JP-4
Pool Size	9 m x 9 m (30 ft x 30 ft)
Fire Temperature	649°C to 1093°C (843°C avg.) 1200°F to 2000°F (1550°F avg.)
Convective Coefficient	25.5 W/m^2-°K (4.5 Btu/ft^2-hr-°F)

[1] From Sandia large pool fires report [3.4.2], Page 41.

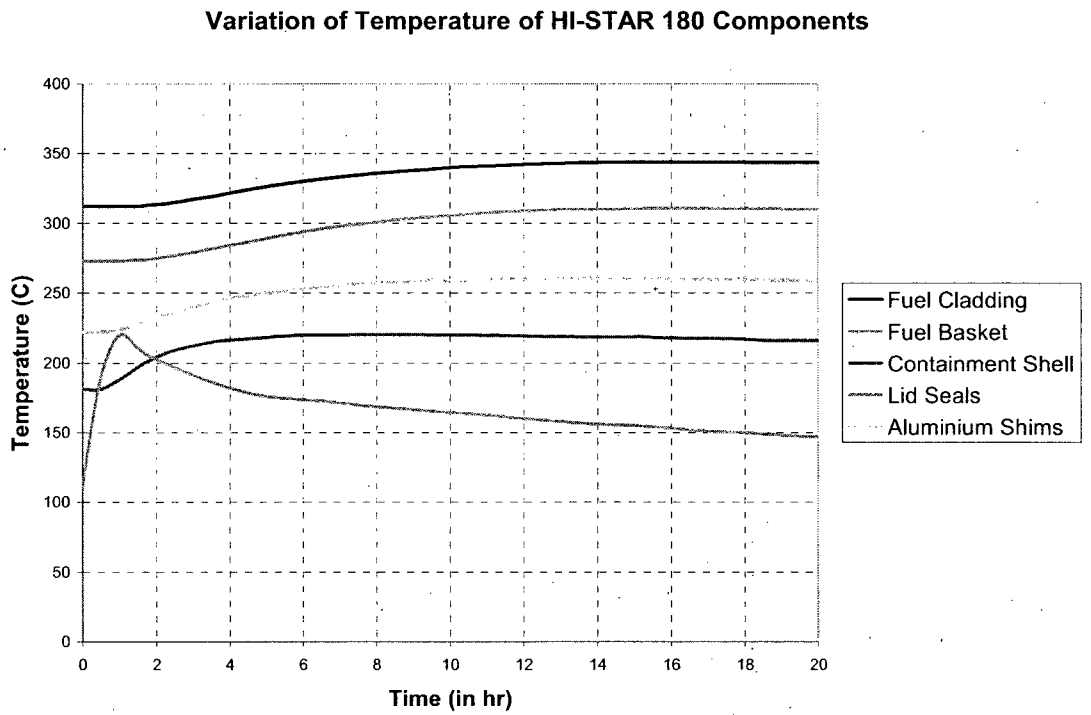

FIGURE 3.4.1: HI-STAR 180 FIRE AND POST FIRE COOLDOWN TEMPERATURE HISTORY

3.5 REFERENCES

The following generic industry and Holtec produced references may have been consulted in the preparation of this document. Where specifically cited, the identifier is listed in the SAR text or table. Active Holtec Calculation Packages which are the repository of all relevant licensing and design basis calculations are annotated as "latest revision". Submittal of the latest revision of such Calculation Packages to the USNRC and other regulatory authorities during the course of regulatory reviews is managed under the company's Configuration Control system.

[3.1.1] Gebhart, B., Jaluria, Y., Mahajan, R.L. and Sammakia, B., "Buoyancy Induced Flows and Transport", Hemisphere Publishing Corporation, NY, (1988).

[3.2.1] Baumeister, T., Avallone, E.A. and Baumeister III, T., "Marks' Standard Handbook for Mechanical Engineers", 8th Edition, McGraw Hill Book Company, 1978.

[3.2.2] Rohsenow, W.M. and Hartnett, J.P., "Handbook of Heat Transfer," McGraw Hill Book Company, New York, 1973.

[3.2.3] Greer et al., "The TN-24P Spent Fuel Storage Cask: Testing and Analyses," EPRI NP-5128, PNL-6054, UC-85, (April 1987).

[3.2.4] Rust, J.H., "Nuclear Power Plant Engineering," Haralson Publishing Company, (1979).

[3.2.5] Kern, D.Q., "Process Heat Transfer," McGraw Hill Kogakusha, (1950).

[3.2.6] "A Handbook of Materials Properties for Use in the Analysis of Light Water Reactor Fuel Rod Behavior", NUREG/CR-0497, (August 1981).

[3.2.7] ASME Boiler and Pressure Vessel Code, Section II, Part D, (2007).

[3.2.8] Jakob, M. and Hawkins, G.A., "Elements of Heat Transfer," John Wiley & Sons, New York, 1957.

[3.2.9] Not Used.

[3.2.10] Not Used.

[3.2.11] "Fundamentals of Heat and Mass Transfer", 4th Edition, F.P. Incropera and D.P. DeWitt, John Wiley & Sons, Inc., New York, 1996.

[3.2.12] Not Used.

[3.2.13] "Hexweb Honeycomb Attributes and Properties", HEXCEL Corp., Pleasanton,

CA, 2006.

[3.2.14] Aluminum Alloy 2219 Material Data Sheet, ASM Aerospace Specification Metals, Inc., Pompano Beach, FL.

[3.2.15] "Handbook of Aluminum," Alcan Aluminum Corporation, 3rd Edition, page 170, (1970).

[3.3.1] ANSYS Finite Element Modeling Package, Swanson Analysis Systems, Inc., Houston, PA, 1993.

[3.3.2] FLUENT Computational Fluid Dynamics Software (Fluent, Inc., Centerra Resource Park, 10 Cavendish Court, Lebanon, NH 03766).

[3.3.3] "Cladding Considerations for the Transportation and Storage of Spent Fuel", Interim Staff Guidance – 11, Rev. 3, (11/17/03).

[3.3.4] "Topical Report on the HI-STAR/HI-STORM Thermal Model and its Benchmarking with Full-Size Cask Test Data," Holtec Report HI-992252, Rev. 1, Holtec International, Marlton, NJ, 08053. (Holtec Proprietary).*

[3.4.1] "Thermal Analyses of the HI-STAR 180", Holtec Report HI-2073649, Latest Revision, (Holtec Proprietary).*

[3.4.2] "Thermal Measurements in a Series of Large Pool Fires", Sandia Report SAND85 – 0196 TTC – 0659 UC 71, (August 1971).

* Supporting document submitted with the HI-STAR 180 License Application (Docket 71-9325).

HOLTEC INTERNATIONAL COPYRIGHTED MATERIAL

CHAPTER 4: CONTAINMENT

4.0 INTRODUCTION

This chapter demonstrates the HI-STAR 180 cask containment system compliance with the permitted activity release limits specified in 10CFR71 for both normal and hypothetical accident conditions of transport [4.0.1]. Satisfaction of the containment criteria, expressed as the leakage rate acceptance criterion, ensures that the loaded HI-STAR 180 cask will not exceed the allowable radionuclide release rates.

The containment system for the HI-STAR 180 cask consists of the components, seals and welds identified in the drawing package in Section 1.3 and also in Figures 4.1.1, 4.1.2, and 4.1.3. [PROPRIETARY TEXT REMOVED] are containment system components whose closure joints must be tested prior to shipment.

Chapter 2 of this SAR shows that all containment system components are maintained within their code-allowable stress limits and metallic seals remain compressed during all normal and hypothetical accident conditions of transport as defined in 10CFR71.71 and 10CFR71.73. Chapter 3 of this SAR shows that the peak containment system component temperatures and pressures are within the design basis limits for all normal and hypothetical accident conditions of transport as defined in 10CFR71.71 and 10CFR71.73. Since both the containment system is shown to remain intact and the temperature and pressure design bases are not exceeded, the design basis leakage rates are not exceeded during normal or hypothetical accident conditions of transport.

The HI-STAR 180 cask is subjected to a fabrication leakage rate test before the first loading. The fabrication leakage rate test is performed at the factory in accordance with ANSI N14.5-1997 [4.0.2] as part of the HI-STAR 180 cask acceptance testing. The HI-STAR 180 cask is also subjected to a pre-shipment leakage rate test after each cask loading and closure. The pre-shipment leakage rate test is performed in accordance with ANSI N14.5-1997 [4.0.2] by the user as final acceptance testing of the HI-STAR 180 cask containment system. The [PROPRIETARY TEXT REMOVED]seals of the HI-STAR 180 cask are to be replaced and retested for each cask loading and closure.

Additional requirements and clarification are provided in Section 4.4 and Chapter 8.

HOLTEC INTERNATIONAL COPYRIGHTED MATERIAL

4.1 DESCRIPTION OF THE CONTAINMENT SYSTEM

The containment system for the HI-STAR 180 cask consists of the containment shell, the containment base plate, the containment closure flange, [PROPRIETARY TEXT REMOVED]closure lid, [PROPRIETARY TEXT REMOVED] closure lid bolts, the [PROPRIETARY TEXT REMOVED]closure lid inter-seal test port plug, the [PROPRIETARY TEXT REMOVED] closure lid port covers, the [PROPRIETARY TEXT REMOVED] lid port cover test port plug, the [PROPRIETARY TEXT REMOVED] closure lid access port plug, and their respective [PROPRIETARY TEXT REMOVED] seals and welds as specified in the drawing package in Section 1.3. The containment boundary and containment system components are shown in Figure 4.1.1 with additional detail on the inner and outer closure lids provided in Figures 4.1.2 and 4.1.3, respectively.

The containment system components for the HI-STAR 180 system are designed and fabricated in accordance with the requirements of ASME Code, Section III, Subsection NB [4.1.1], to the maximum extent practicable as clarified in Chapter 2 of this SAR. Chapter 1 specifies design criteria for the containment system. Section 2.1 provides the applicable Code requirements. Exceptions to specific Code requirements with complete justifications are presented in Table 2.1.14.

4.1.1 Containment Vessel

The cask containment vessel consists of components which form the inner containment space and expanded containment inter-lid space. The inner containment space is used to house the internal basket designs which hold spent nuclear fuel. The containment vessel is represented by the containment shell, containment base plate, containment closure flange, and inner and outer closure lids. These are the main containment system components that create an enclosed cylindrical cavity for the containment of the enclosed radiological contents. The materials of construction for the containment vessel are specified in the drawing package in Section 1.3. No valve or pressure relief device is specified on the HI-STAR 180 containment system.

4.1.2 Containment Penetrations

The cask containment system penetrations include the [PROPRIETARY TEXT REMOVED]closure lid vent and drain ports, and the [PROPRIETARY TEXT REMOVED]closure lid access port. Each penetration has [PROPRIETARY TEXT REMOVED]seals. The containment penetrations are designed and tested to ensure that the radionuclide release rates specified in 10CFR71.51 will not be exceeded.

4.1.3 Seals and Welds

The cask uses a combination of seals and welds designed and tested to provide containment during normal transport conditions, and during and after hypothetical accident conditions of transport. Seals and welds are individually discussed below.

The seals and welds provide for a containment system which is securely closed and, cannot be

opened unintentionally or by an internal pressure within the package as required in 10CFR71.43(c).

4.1.3.1 Containment Seals

The containment system seals are designed and fabricated to meet the design requirements of the HI-STAR 180 cask specified in subparagraph 2.2.1.1.6 and in accordance with the manufacturer's recommendations. Chapter 7 describes the operating procedures required for proper seal function. Seal and closure details are provided in the drawing package in Section 1.3.

4.1.3.1.1 [PROPRIETARY TEXT REMOVED]

4.1.3.1.2 [PROPRIETARY TEXT REMOVED]

4.1.3.2 Containment Welds

The cask containment system welds consists of full penetration welds forming the containment shell, the full penetration weld connecting the containment shell to the containment closure flange, and the full penetration weld connecting the containment base plate to the containment shell. All containment system boundary welds are fabricated and inspected in accordance with ASME Code Section III, Subsection NB. The weld details and examinations are shown in the drawing package in Section 1.3.

4.1.4 [PROPRIETARY TEXT REMOVED]

Bolt torquing patterns, lubrication requirements, and torque values are provided in Table 7.1.1. The torque values are established to maintain leaktight containment during normal and accident conditions of transport. Torque values for the [PROPRIETARY TEXT REMOVED]closure lid bolts preclude separation of the closure lids from the containment closure flange as clarified in Chapter 2. The closure lid bolts cannot be opened unintentionally or by a pressure that may arise within the package.

HOLTEC INTERNATIONAL COPYRIGHTED MATERIAL

THIS FIGURE IS PROPRIETARY IN ITS ENTIRETY

Figure 4.1.1: [PROPRIETARY TEXT REMOVED]

HOLTEC INTERNATIONAL COPYRIGHTED MATERIAL

THIS FIGURE IS PROPRIETARY IN ITS ENTIRETY

Figure 4.1.2: [PROPRIETARY TEXT REMOVED]

HOLTEC INTERNATIONAL COPYRIGHTED MATERIAL

THIS FIGURE IS PROPRIETARY IN ITS ENTIRETY

Figure 4.1.3: [PROPRIETARY TEXT REMOVED]

HOLTEC INTERNATIONAL COPYRIGHTED MATERIAL

4.2 CONTAINMENT UNDER NORMAL CONDITIONS OF TRANSPORT

Section 2.6 of this SAR shows that all containment system components are maintained within their code-allowable stress limits and the [PROPRIETARY TEXT REMOVED] seals remain compressed during all normal conditions of transport as defined in 10CFR71.71 [4.0.1]. Section 3.1 of this SAR shows that all containment system components are maintained within their peak temperature and pressure limits for all normal conditions of transport as defined in 10CFR71.71. Since the containment system remains intact without exceeding temperature and pressure limits, the design basis leakage rate (see Table 8.1.1) will not be exceeded during normal conditions of transport.

4.2.1 Containment Criteria

The leaktight criteria as defined by ANSI N14.5-1997 [4.0.2] shall be used for all containment system leakage tests. Compliance with the leaktight criteria of ANSI N14.5 precludes any significant release of radioactive materials and ensures that the radionuclide release rates specified in 10CFR71.51(a)(1) will not be exceeded during normal conditions of transport. Therefore, no containment analyses are performed for normal conditions of transport. Containment allowable leakage rate criteria and the type of tests specified are provided in Table 8.1.1 and Table 8.1.2.

4.2.2 Leak Test Sensitivity

The sensitivity for the leakage test instrument shall be equal to one-half of the allowable leakage rate in accordance with ANSI N14.5 (also see Table 8.1.1).

HOLTEC INTERNATIONAL COPYRIGHTED MATERIAL

4.3 CONTAINMENT UNDER HYPOTHETICAL ACCIDENT CONDITIONS OF TRANSPORT

Section 2.7 of this SAR shows that all containment system components are maintained within their code-allowable stress limits and the metallic seals remain compressed during all hypothetical accident conditions of transport as defined in 10CFR71.73 [4.0.1]. Section 3.1 of this SAR shows that all containment system components are maintained within their peak temperature and pressure limits for all hypothetical accident conditions of transport as defined in 10CFR71.73. Since the containment system remains intact without exceeding temperature and pressure limits, the design basis leakage rate (see Table 8.1.1) will not be exceeded during hypothetical accident conditions of transport.

4.3.1 Containment Criteria

The leaktight criteria as defined by ANSI N14.5-1997 [4.0.2] shall be used for all containment system leakage tests. Compliance with the leaktight criteria of ANSI N14.5 precludes any significant release of radioactive materials and ensures that the radionuclide release rates specified in 10CFR71.51(a)(2) will not be exceeded during hypothetical accident conditions of transport. Therefore, no containment analyses are performed for hypothetical accident conditions of transport. Containment allowable leakage rate criteria and the type of tests specified are provided in Table 8.1.1 and Table 8.1.2.

4.3.2 Leak Test Sensitivity

The sensitivity for the leakage test instrument shall be equal to one-half of the allowable leakage rate in accordance with ANSI N14.5 (also see Table 8.1.1).

HOLTEC INTERNATIONAL COPYRIGHTED MATERIAL

4.4 LEAKAGE RATE TESTS FOR TYPE B PACKAGES

All leakage rate testing of the cask containment system shall be performed in accordance with the guidance in ANSI N14.5-1997 [4.0.2]. Table 8.1.2 provides the containment system components to be tested and the type of leakage test to be performed for post-fabrication qualification and for pre-shipment qualification.

4.4.1 Fabrication Leakage Rate Test

The fabrication leakage rate test demonstrates that the containment system, as fabricated, provides the required level of containment. The fabrication leakage test for the HI-STAR 180 package is performed at the fabrication facility to ensure that the welded enclosure vessel will maintain its containment function.

Additionally, after fabrication of all components, seals are tested to ensure that the fit-up of the [PROPRIETARY TEXT REMOVED] closure lid with the containment flange will meet the leakage rate acceptance criteria after fuel loading.

4.4.2 Pre-Shipment Leakage Rate Test

The pre-shipment leakage rate test demonstrates that the containment system closure has been properly performed. Pre-shipment leakage rate testing is performed by the user before each shipment, after the contents are loaded and the containment system is assembled (if not previously tested in the prior 12 months except as indicated in Section 8.2.2).

HOLTEC INTERNATIONAL COPYRIGHTED MATERIAL

4.5 REFERENCES

The following generic industry and Holtec produced references may have been consulted in the preparation of this document. Where specifically cited, the identifier is listed in the SAR text or table. Active Holtec Calculation Packages which are the repository of all relevant licensing and design basis calculations are annotated as "latest revision". Submittal of the latest revision of such Calculation Packages to the USNRC and other regulatory authorities during the course of regulatory reviews is managed under the company's Configuration Control system.

[4.0.1] 10CFR71. "Packaging and Transportation of Radioactive Materials", Title 10 of the Code of Federal Regulations, Office of the Federal Register, Washington, D.C.

[4.0.2] ANSI N14.5-1997. "American National Standard for Radioactive Materials- Leakage Tests on Packages for Shipment."

[4.1.1] American Society of Mechanical Engineers (ASME), Boiler and Pressure Vessel Code, Section III, Division 1, Subsection NB, Class 1 Components, 2007

HOLTEC INTERNATIONAL COPYRIGHTED MATERIAL

CHAPTER 5 - SHIELDING EVALUATION

5.0 INTRODUCTION

The shielding analysis of the HI-STAR 180 Package to demonstrate compliance with 10CFR71.47 and 10CFR71.51 is presented in this chapter. The HI-STAR 180 is designed to accommodate two baskets, the F-32 and F-37 [PROPRIETARY INFORMATION REMOVED].

In order to offer the user flexibility in fuel loading, the HI-STAR 180 offers several different loading patterns, [PROPRIETARY INFORMATION REMOVED] The patterns are described in Subsection 1.2.2. All loading patterns have been analyzed and found to be acceptable compared to the regulatory limits.

The transport index in 10CFR71 is defined as the number determined by multiplying the radiation level in milliSievert per hour (mSv/h) at one meter from the external surface of the package by 100. Since the HI-STAR 180 has been designed to meet a dose rate limit of 0.1 mSv/h at 2 meters from the surface of the vehicle, the dose rate at 1 meter from the package could be greater than 0.1 mSv/h and the transport index could exceed 10. Therefore, the HI-STAR 180 loaded with design basis fuel must be shipped by exclusive use shipment as discussed in Section 1.1.

The shielding analyses were performed with MCNP-4A [5.1.1] developed by Los Alamos National Laboratory (LANL). The source terms for the design basis fuels were calculated with the SAS2H [5.1.2] and ORIGEN-S [5.1.3] sequences from the SCALE 4.4 system. These are principally the same codes that were used in Holtec's approved Storage and Transportation FSARs and SAR under separate docket numbers [5.1.4]. Detailed descriptions of the MCNP models and the source term calculations are presented in Sections 5.3 and 5.2, respectively.

This chapter contains the following information:

- A description of the shielding features of the HI-STAR 180.
- A description of the source terms.
- A general description of the shielding analysis methodology.
- A description of the analysis assumptions and results for the HI-STAR 180.
- Analyses for the HI-STAR 180's content and results to show that the 10CFR71.47 dose rate limits are met during normal conditions of transport and that the 10CFR71.51 dose rate limit is not exceeded following hypothetical accident conditions.

HOLTEC INTERNATIONAL COPYRIGHTED MATERIAL

5.1 DESCRIPTION OF SHIELDING DESIGN

5.1.1 Design Features

The principal design features of the HI-STAR 180 packaging with respect to radiation shielding consist of the fuel basket and basket support structures, the cask [PROPRIETARY INFORMATION REMOVED], and certain parts of the impact limiters. The main shielding is provided by the cask body. [PROPRIETARY INFORMATION REMOVED] The fuel basket and the basket supports maintain the fuel assemblies in a fixed position within the package, and also provide additional gamma shielding. For the impact limiters, only the central steel structures are credited in the analysis as additional gamma shielding in the axial direction. Any shielding effect of the crushable impact limiter material and its surrounding steel skin is neglected. The dimensions of the shielding components are shown in the drawing package in Section 1.3. Main dimensions used in the shielding analyses are also shown in Figure 5.3.3 through 5.3.7. The shielding material densities are listed in Table 5.3.2.

5.1.2 Summary of Maximum Radiation Levels

The burnup and cooling time combinations specified in Subsection 1.2.2 were determined strictly based on the shielding analysis in this chapter. Each combination was independently analyzed and it was verified that the calculated dose rates were less than the regulatory limits. In this subsection, only the results for each basket that produce the highest dose rates at the surface and at 2 m under normal conditions, and at 1 m under accident conditions are presented. Dose rates for additional configurations are presented in Section 5.4.

The dose rates listed in the tables in this subsection are maximum values, considering axial, radial and azimuthal variations as applicable. This is achieved by specifying a reasonably fine grid of dose locations around the cask, and selecting the highest values. For details on dose locations see Subsection 5.3.3.

The dose rates listed in this subsection are based on a number of conservative assumptions. However, they do not account for any uncertainties except for the inherent uncertainties of the Monte Carlo calculations, which are listed in the results tables. In Subsection 5.4.6, additional calculations are performed using a best estimate approach instead of the conservative assumptions, and then adding the effect of the major uncertainties. These calculations result in dose rates that are equivalent to or less than those listed in this subsection. This provides further assurance that the dose rates listed here are reasonable and conservative.

5.1.2.1 Normal Conditions

As discussed in Section 1.1, HI-STAR 180 will be transported by exclusive use shipment and complies with 10CFR71.47(b).

Dose rates are calculated on the cask surface, at locations shown in Figure 5.1.1. Results are presented in Tables 5.1.1 and 5.1.2 for the F-32 and F-37 basket, respectively.

All values are below 2 mSv/h, therefore showing that the HI-STAR 180 complies with 10CFR71.47(b)(1). Note that the additional conditions stated in 10CFR71.47(b)(1)(i) through (iii) (closed vehicle; fixed position; no loading/unloading) do not have to be met by the HI-STAR 180, since the surface dose rate do not exceed 2 mSv/h

The calculated dose rates on the surface of the cask are below 2 mSv/h. Therefore, dose rates at any point on the outer surface of the vehicle will also be below 2 mSv/h. The HI-STAR 180 therefore complies with 10CFR71.47(b)(2).

The maximum dose rates for the HI-STAR 180 have been calculated at a distance of 2 m from the cask and impact limiter surfaces, for the locations shown in Figure 5.1.1. Results are presented in Tables 5.1.3 and 5.1.4 for the F-32 and F-37 basket, respectively, showing that all dose rates at that distance are below 0.1 mSv/h. Consequently, the dose rates 2 m from the outer edges of the vehicle will also be below 0.1 mSv/h. The HI-STAR 180 therefore complies with 10CFR71.47(b)(3).

Dose rates have been calculated to determine the distance necessary to comply with the 0.02 mSv/hr requirement specified in 10CFR71.47(b)(4) for any normally occupied space. The results presented in Tables 5.1.5 and 5.1.6 for the F-32 and F-37 basket, respectively, identify the distances necessary from Dose Locations 4 and 5 (the top and bottom of the HI-STAR 180, see Figure 5.1.1) for which exposed personnel of private carriers must maintain in order meet the 0.02 mSv/h requirement. Therefore, if the normally occupied space of the vehicle is at a distance less than the values specified in Tables 5.1.5 and 5.1.6, radiation dosimetry is required for personnel to comply with 10CFR71.47(b)(4).

The analyses summarized in this section demonstrate HI-STAR 180's compliance with the 10CFR71.47(b) limits.

5.1.2.2 Hypothetical Accident Conditions

The hypothetical accident conditions of transport presented in Section 2.7 have two bounding consequences that affect the shielding materials. These are the damage to the neutron shield as a result of the design basis fire, and damage to the impact limiters as a result of the 9-meter (30 foot) drop. Conservatively, the shielding analysis of the hypothetical accident condition assumes the neutron shield is completely destroyed and replaced by a void and the impact limiters are no longer present. This is a highly conservative assumption since some portion of the neutron shield would be expected to remain after the fire, and the impact limiters have been shown through the calculations in Chapter 2 to remain attached following impact.

Throughout the hypothetical accident condition the axial location of the fuel will remain practically fixed within the baskets (see Subsection 5.3.1.2). Chapter 2 shows that the HI-STAR 180 cask remains unaltered throughout the hypothetical accident conditions. Localized damage of the cask outer surface could be experienced during the pin puncture, and small localized deformations of the basket might be possible during drop accidents. However, such localized

HOLTEC INTERNATIONAL COPYRIGHTED MATERIAL

deformations will have a negligible impact on the dose rate at 1 meter from the surface.

Figure 5.1.2 shows the dose locations 1 meter from the surface for the conditions of the HI-STAR 180 Package after the postulated accident. Corresponding maximum dose rates are listed in Tables 5.1.7 and 5.1.8 for the F-32 and F-37 basket, respectively. All values in these tables are below the regulatory limit of 10 mSv/h.

Analyses summarized in this section demonstrate the HI-STAR 180 Package's compliance with the 10CFR71.51 radiation dose limit.

HOLTEC INTERNATIONAL COPYRIGHTED MATERIAL

TABLE 5.1.1

MAXIMUM DOSE RATES ON THE SURFACE OF THE HI-STAR 180 PACKAGE WITH THE F-32 BASKET FOR NORMAL CONDITIONS

Dose Point† Location	[PROPRIETARY INFORMATION REMOVED]	[PROPRIETARY INFORMATION REMOVED]	[PROPRIETARY INFORMATION REMOVED]	**Totals (mSv/h)**	[PROPRIETARY INFORMATION REMOVED]	**10 CFR 71.47 Limit (mSv/h)**
1				0.928		2
2				0.404		2
3				0.694		2
4				0.378		2
5				0.440		2

† *Refer to Figure 5.1.1.*

† Refer to Figure 5.1.1.

HOLTEC INTERNATIONAL COPYRIGHTED MATERIAL

TABLE 5.1.2

MAXIMUM DOSE RATES ON THE SURFACE OF THE HI-STAR 180 PACKAGE WITH THE F-37 BASKET FOR NORMAL CONDITIONS

Dose Point† Location	[PROPRIETARY INFORMATION REMOVED]	[PROPRIETARY INFORMATION REMOVED]	[PROPRIETARY INFORMATION REMOVED]	**Totals (mSv/h)**	[PROPRIETARY INFORMATION REMOVED]	**10 CFR 71.47 Limit (mSv/h)**
1				0.890		2
2				0.426		2
3				0.661		2
4				0.344		2
5				0.394		2

HOLTEC INTERNATIONAL COPYRIGHTED MATERIAL

TABLE 5.1.3

MAXIMUM DOSE RATES AT 2 METERS FROM THE HI-STAR 180 PACKAGE WITH THE F-32 BASKET FOR NORMAL CONDITIONS

Dose Point† Location	[PROPRIETARY INFORMATION REMOVED]	[PROPRIETARY INFORMATION REMOVED]	[PROPRIETARY INFORMATION REMOVED]	**Totals (mSv/h)**	[PROPRIETARY INFORMATION REMOVED]	**10 CFR 71.47 Limit (mSv/h)**
1				0.0641		0.1
2				0.0816		0.1
3				0.0672		0.1
4				0.0617		0.1
5				0.0861		0.1

† Refer to Figure 5.1.1.

† Refer to Figure 5.1.1.

HOLTEC INTERNATIONAL COPYRIGHTED MATERIAL

TABLE 5.1.4

MAXIMUM DOSE RATES AT 2 METERS FROM THE HI-STAR 180 PACKAGE WITH THE F-37 BASKET FOR NORMAL CONDITIONS

Dose Point† Location	[PROPRIETARY INFORMATION REMOVED]	[PROPRIETARY INFORMATION REMOVED]	[PROPRIETARY INFORMATION REMOVED]	**Totals (mSv/h)**	[PROPRIETARY INFORMATION REMOVED]	**10 CFR 71.47 Limit (mSv/h)**
1				0.0612		0.1
2				0.0802		0.1
3				0.0655		0.1
4				0.0607		0.1
5				0.0847		0.1

HOLTEC INTERNATIONAL COPYRIGHTED MATERIAL

TABLE 5.1.5

DISTANCES FOR THE 0.02 mSv/h DOSE RATE REQUIREMENT FOR THE HI-STAR 180 PACKAGE WITH THE F-32 BASKET FOR NORMAL CONDITIONS

Dose Point† Location	[PROPRIETARY INFORMATION REMOVED]	[PROPRIETARY INFORMATION REMOVED]	[PROPRIETARY INFORMATION REMOVED]	[PROPRIETARY INFORMATION REMOVED]	**Totals (mSv/h)**	[PROPRIETARY INFORMATION REMOVED]	**10 CFR 71.47 Limit (mSv/h)**
4					0.0185		0.02
5					0.0185		0.02

† Refer to Figure 5.1.1.

† Refer to Figure 5.1.1.

HOLTEC INTERNATIONAL COPYRIGHTED MATERIAL

TABLE 5.1.6

DISTANCES FOR THE 0.02 mSv/h DOSE RATE REQUIREMENT FOR THE HI-STAR 180 PACKAGE WITH THE F-37 BASKET FOR NORMAL CONDITIONS

Dose Point† Location	[PROPRIETARY INFORMATION REMOVED]	[PROPRIETARY INFORMATION REMOVED]	[PROPRIETARY INFORMATION REMOVED]	[PROPRIETARY INFORMATION REMOVED]	**Totals (mSv/h)**	[PROPRIETARY INFORMATION REMOVED]	**10 CFR 71.47 Limit (mSv/h)**
4					0.0172		0.02
5					0.0190		0.02

HOLTEC INTERNATIONAL COPYRIGHTED MATERIAL

TABLE 5.1.7

MAXIMUM DOSE RATES AT 1 METER FROM THE HI-STAR 180 PACKAGE WITH THE F-32 BASKET FOR ACCIDENT CONDITIONS

Dose Point† Location	[PROPRIETARY INFORMATION REMOVED]	[PROPRIETARY INFORMATION REMOVED]	[PROPRIETARY INFORMATION REMOVED]	**Totals (mSv/h)**	[PROPRIETARY INFORMATION REMOVED]	**10 CFR 71.51 Limit (mSv/h)**
1				4.17		10
2				9.15		10
3				3.89		10
4				2.03		10
5				8.57		10

† Refer to Figure 5.1.2.

† Refer to Figure 5.1.2.

HOLTEC INTERNATIONAL COPYRIGHTED MATERIAL

TABLE 5.1.8

MAXIMUM DOSE RATES AT 1 METER FROM THE HI-STAR 180 PACKAGE WITH THE F-37 BASKET FOR ACCIDENT CONDITIONS

Dose Point† Location	[PROPRIETARY INFORMATION REMOVED]	[PROPRIETARY INFORMATION REMOVED]	[PROPRIETARY INFORMATION REMOVED]	**Totals (mSv/h)**	[PROPRIETARY INFORMATION REMOVED]	**10 CFR 71.51 Limit (mSv/h)**
1				4.31		10
2				9.68		10
3				4.12		10
4				1.86		10
5				7.72		10

HOLTEC INTERNATIONAL COPYRIGHTED MATERIAL

THIS FIGURE IS PROPRIETARY IN ITS ENTIRETY

FIGURE 5.1.1 : [PROPRIETARY INFORMATION REMOVED]

HOLTEC INTERNATIONAL COPYRIGHTED MATERIAL

THIS FIGURE IS PROPRIETARY IN ITS ENTIRETY

FIGURE 5.1.2 : [PROPRIETARY INFORMATION REMOVED]

HOLTEC INTERNATIONAL COPYRIGHTED MATERIAL

5.2 SOURCE SPECIFICATION

The principal sources of radiation in the HI-STAR 180 are:

- Gamma radiation originating from the following sources (see Subsection 5.2.1)

    1. Decay of radioactive fission products
    2. Secondary photons from neutron capture in fissile and non-fissile nuclides
    3. Hardware activation products generated during core operations

- Neutron radiation originating from the following sources (see Subsection 5.2.2)

    1. Spontaneous fission
    2. α,n reactions in fuel materials
    3. Secondary neutrons produced by fission from subcritical multiplication
    4. γ,n reactions (this source is negligible)

The neutron and gamma source terms were calculated with the SAS2H [5.1.2] and ORIGEN-S [5.1.3] modules of the SCALE 4.4 system using the 44-group library.

The assemblies to be qualified for transportation in the HI-STAR 180 contain both UO_2 and MOX assemblies. A description of the design basis fuel assemblies for the source term calculations is provided in Tables 5.2.1 through Tables 5.2.3 for both the UO_2 and MOX fuel. [PROPRIETARY INFORMATION REMOVED]

Subsection 1.2.2 specifies the bounding burnup, cooling time and enrichment combinations for spent nuclear fuel that were analyzed for transport in the HI-STAR 180. Each combination results in a dose rate equal to or less than the maximum values reported in this section. [PROPRIETARY INFORMATION REMOVED]

The source term calculations also determine the radionuclide composition of the spent fuel for the various conditions. [PROPRIETARY INFORMATION REMOVED]

The following Subsections 5.2.1 and 5.2.2 describe the calculation of the gamma and neutron source terms. Subsection 5.2.3 discusses the uncertainties associated with the SAS2H/ORIGEN-S calculations related to reactor input parameters, decay heat generation, and source term calculations.

5.2.1 Gamma Source

Table 5.2.4 provides the gamma source in MeV/s and photons/s as calculated with SAS2H and ORIGEN-S for bounding burnup and cooling time combinations for UO_2 and MOX fuel, and for the burnup and cooling time combinations specified in the uniform loading cases in subsection 1.2.2.

NUREG-1617 [5.2.1] states that "In general, only gammas from approximately 0.8 MeV-2.5 MeV will contribute significantly to the external radiation levels." [PROPRIETARY INFORMATION REMOVED]

ORIGEN-S was used to calculate a ^{60}Co activity level for the desired burnup and decay time. The methodology used to determine the activation level was developed from Reference [5.2.2] and is described here.

1. The activity of the ^{60}Co from ^{59}Co, steel and inconel is calculated using ORIGEN-S. The flux used in the calculation was the in-core fuel region flux at full power.

2. The activity calculated in Step 1 for the region of interest was modified by the appropriate scaling factors listed in Table 5.2.5. These scaling factors were taken from Reference [5.2.2].

Table 5.2.6 provides the ^{60}Co activity utilized in the shielding calculations in the non-fuel regions of the assemblies for the bounding burnup and cooling time combinations, and for the burnup and cooling time combinations specified in the uniform loading cases in Subsection 1.2.2.

5.2.2 [PROPRIETARY INFORMATION REMOVED]Neutron Source

It is well known that the neutron source strength for a UO_2 assembly increases as enrichment decreases, for a constant burnup and decay time. This is due to the increase in Pu content in the fuel that increases the inventory of other transuranium nuclides such as Cm. The gamma source also varies with enrichment, although only slightly. [PROPRIETARY INFORMATION REMOVED]

The neutron sources calculated for the UO_2 and MOX fuel are listed in Table 5.2.7 in neutrons/s for the bounding burnup and cooling times, and for the burnup and cooling time combinations specified in the uniform loading cases in Subsection 1.2.2. [PROPRIETARY INFORMATION REMOVED]

5.2.3 Uncertainties in Depletion Calculations

There are various uncertainties associated with the SAS2H/ORIGEN-S calculations. Some uncertainties are inherent to the code, e.g., physics data, while other uncertainties are associated with input data. This subsection provides estimates of those uncertainties. Specifically, the

variations in the gamma and neutron source terms from variations in the input parameters, and the variations in heat loads, gamma and neutron source terms resulting from the uncertainty in the isotope calculations are determined. In all cases, the variations or uncertainties in the amount of relevant isotopes are taken from published references. The depletion calculations performed for the HI-STAR 180 are then used to determine how much the heat load, gamma and neutron source terms are expected to change as a result of the changes in the isotope amounts.

5.2.3.1 Uncertainties in Source Term Input Reactor Operating Parameters

In [5.1.5], studies were performed to determine what effect changes in the relevant input parameters to SAS2H and ORIGEN-S have on the calculated concentration for a range of important isotopes. The results of the studies are presented as functions in the form of power laws for each input parameter, and each selected isotope. For a single nuclide and input parameter, the function has the form

$$S_i \propto x_j^{p_{i,j}}$$

where,

S_i = Relative Change in Mass or Source Term for Isotope i
x_j = Relative Change in Input Parameter j
$p_{i,j}$ = Power Coefficient for Input Parameter j's impact on Source Term from Isotope i

For all input parameters, the effect on isotope i is then

$$S_i \propto \prod_j x_j^{p_{i,j}}$$

In Table B.2 in [5.1.5], a matrix is presented with power coefficient for various input parameters and isotopes. The isotopes include Cm-244, which dominates the neutron source in the fuel, and several fission products that dominate the gamma source. [PROPRIETARY INFORMATION REMOVED]

5.2.3.2 Uncertainties in Decay Heat Calculations

The estimation in the uncertainty of the decay heat values is performed with the same methodology that was previously used for the HI-STORM to determine decay heat uncertainty for high burnup fuel (see Section 5.2.5.3 of [1.2.7]). [PROPRIETARY INFORMATION REMOVED]

HOLTEC INTERNATIONAL COPYRIGHTED MATERIAL

It is noted that the uncertainty coefficients from [5.2.3] are based on measured fuel samples with burnup values varying from approximately 11.5 GWd/MTU to 31.5 GWd/MTU, which is less than the maximum burnup for the HI-STAR 180. However, the comparisons of the measured-to-computed percentage differences presented in [5.2.3] indicate no increasing difference as a function of increasing burnup. [PROPRIETARY INFORMATION REMOVED]

The calculated temperatures reported in Chapter 3 show significant margin against all temperature limits. It is therefore not considered necessary to apply any uncertainty to the calculated heat load values before comparing them to the allowable limits listed in Section 1.2.

5.2.3.3 Uncertainties in Source Term Generation

Estimating the uncertainties in the source term values is performed using the same approach as discussed before for the decay heat, [PROPRIETARY INFORMATION REMOVED]

HOLTEC INTERNATIONAL COPYRIGHTED MATERIAL

TABLE 5.2.1
[PROPRIETARY INFORMATION REMOVED]

HOLTEC INTERNATIONAL COPYRIGHTED MATERIAL

TABLE 5.2.2

[PROPRIETARY INFORMATION REMOVED]

TABLE 5.2.3

[PROPRIETARY INFORMATION REMOVED]

HOLTEC INTERNATIONAL COPYRIGHTED MATERIAL

TABLE 5.2.4

CALCULATED GAMMA SOURCE PER ASSEMBLY
FOR SELECTED BURNUP AND COOLING TIMES

Lower Energy	**Upper Energy**	**UO_2 Fuel 66,000 MWd/MtU 3 Year Cooling 4.5 wt% ^{235}U**		**MOX Fuel 61,500 MWd/MtU 11 Year Cooling MV-1**	
(MeV)	(MeV)	(MeV/s)	(Photons/s)	(MeV/s)	(Photons/s)
0.45	0.7	2.84E15	4.93E15	1.07E15	1.87E15
0.7	1.0	1.35E15	1.58E15	1.23E14	1.44E14
1.0	1.5	2.72E14	2.18E14	8.53E13	6.82E13
1.5	2.0	1.98E13	1.13E13	4.32E12	2.46E12
2.0	2.5	1.91E13	8.50E12	4.40E10	1.96E10
2.5	3.0	7.16E11	2.60E11	6.050E9	2.200E9
Total		4.50E15	6.75E15	1.28E15	2.08E15

Lower Energy	**Upper Energy**	**UO_2 Fuel 66,000 MWd/MtU 7 Year Cooling 4.5 wt% ^{235}U**		**UO_2 Fuel 66,000 MWd/MtU 8 Year Cooling 4.5 wt% ^{235}U**	
(MeV)	(MeV)	(MeV/s)	(Photons/s)	(MeV/s)	(Photons/s)
0.45	0.7	1.59E15	2.76E15	1.46E15	2.54E15
0.7	1.0	3.80E14	4.47E14	2.83E14	3.33E14
1.0	1.5	1.10E14	8.76E13	9.35E13	7.48E13
1.5	2.0	5.00E12	2.86E12	4.31E12	2.46E12
2.0	2.5	7.31E11	3.25E11	3.36E11	1.49E11
2.5	3.0	4.76E10	1.73E10	2.47E10	8.99E09
Total		2.09E15	3.30E15	1.84E15	2.95E15

HOLTEC INTERNATIONAL COPYRIGHTED MATERIAL

TABLE 5.2.5

[PROPRIETARY INFORMATION REMOVED]

TABLE 5.2.6

CALCULATED ^{60}Co SOURCE PER ASSEMBLY
FOR SELECTED BURNUP AND COOLING TIMES

Location	**UO_2 Fuel 66,000 MWd/MTU 3 Year Cooling 4.5 wt% ^{235}U (Photons/s)**	**MOX Fuel 61,500 MWd/MTU 11 Year Cooling MV-1 (Photons/s)**
Bottom nozzle	2.49E13	5.82E12
Active fuel zone	2.70E13	6.26E12
Upper portion of fuel rods w/o grid spacer	6.59E12	1.54E12
Upper portion of fuel rods with grid spacer	2.96E12	6.88E11
Top nozzle	2.51E12	5.47E11

Location	**UO_2 Fuel 66,000 MWd/MTU 7 Year Cooling 4.5 wt% ^{235}U (Photons/s)**	**UO_2 Fuel 66,000 MWd/MTU 8 Year Cooling 4.5 wt% ^{235}U (Photons/s)**
Bottom nozzle	1.37E13	1.20E13
Active fuel zone	1.47E13	1.29E13
Upper portion of fuel rods w/o grid spacer	3.62E12	3.17E12
Upper portion of fuel rods with grid spacer	1.62E12	1.42E12
Top nozzle	1.32E12	1.16E12

TABLE 5.2.7

CALCULATED NEUTRON SOURCE PER ASSEMBLY
FOR BOUNDING BURNUPS AND COOLING TIMES

Lower Energy (MeV)	**Upper Energy (MeV)**	**UO_2 Fuel 66,000 MWd/MTU 3 Year Cooling 4.5 wt% ^{235}U (Neutrons/s)**	**MOX Fuel 61,500 MWd/MTU 11 Year Cooling MV-1 (Neutrons/s)**
1.0E-01	4.0E-01	3.71E7	1.49E8
4.0E-01	9.0E-01	1.89E8	7.61E8
9.0E-01	1.4	1.73E8	6.96E8
1.4	1.85	1.27E8	5.12E8
1.85	3.0	2.24E8	9.01E8
3.0	6.43	2.04E8	8.21E8
6.43	20.0	1.82E7	7.30E7
Totals		9.74E8	3.91E9

Lower Energy (MeV)	**Upper Energy (MeV)**	**UO_2 Fuel 66,000 MWd/MTU 7 Year Cooling 4.5 wt% ^{235}U (Neutrons/s)**	**UO_2 Fuel 66,000 MWd/MTU 8 Year Cooling 4.5 wt% ^{235}U (Neutrons/s)**
1.0E-01	4.0E-01	3.13E7	3.00E7
4.0E-01	9.0E-01	1.60E8	1.53E8
9.0E-01	1.4	1.46E8	1.40E8
1.4	1.85	1.08E8	1.03E8
1.85	3.0	1.89E8	1.82E8
3.0	6.43	1.72E8	1.66E8
6.43	20.0	1.53E7	1.47E7
Totals		8.22E8	7.90E8

HOLTEC INTERNATIONAL COPYRIGHTED MATERIAL

TABLE 5.2.8

[PROPRIETARY INFORMATION REMOVED]

HOLTEC INTERNATIONAL COPYRIGHTED MATERIAL

TABLE 5.2.9

[PROPRIETARY INFORMATION REMOVED]

HOLTEC INTERNATIONAL COPYRIGHTED MATERIAL

5.3 SHIELDING MODEL

The shielding analysis of the HI-STAR 180 was performed with MCNP-4A [5.1.1]. MCNP is a Monte Carlo transport code that offers a full three-dimensional combinatorial geometry modeling capability including such complex surfaces as cones and tori. This means that no gross approximations were required to represent the HI-STAR 180 in the shielding analysis. MCNP-4A is the same code that is used for the shielding calculations of Holtec's other approved dry storage and transportation systems under separate dockets.

The MCNP model of the HI-STAR 180 Package for normal conditions has the neutron shield and impact limiters in place. The MCNP model for the hypothetical accident condition replaces the neutron shield with void and removes the impact limiters as discussed in Subsection 5.1.2.2. The shielding effect of the aluminum honeycomb in the impact limiters was conservatively neglected in all MCNP models. However, credit was taken for the outer dimensions of the impact limiters in axial direction under normal conditions, i.e. the axial dose locations are based on the distance from the skin around the crush material.

[PROPRIETARY INFORMATION REMOVED]

5.3.1 Configuration of Shielding and Source

5.3.1.1 Shielding Configuration

Section 1.3 provides the drawings that describe the HI-STAR 180 Packaging. These drawings were used to create the MCNP models used in the radiation transport calculations. The drawing package also illustrates the HI-STAR 180 on a typical transport vehicle with a personnel barrier installed. The vehicle and barrier were not considered in the MCNP model, i.e. the outer dimensions of the vehicle are conservatively assumed to be identical to the outer dimensions of the package as modeled for normal conditions. Figures 5.3.1 and 5.3.2 show the cross sectional views of the HI-STAR 180 cask and F-37 and F-32 baskets respectively, as they were modeled in MCNP. The figures were created with the MCNP plotter and are drawn to scale. [PROPRIETARY INFORMATION REMOVED] Figure 5.3.3 shows the MCNP model of the F-32 and F-37 baskets including the as modeled dimensions. Figure 5.3.4 shows a cross sectional view of the HI-STAR 180 cask with the as-modeled thickness of the various materials. Figure 5.3.5 is an axial representation of the HI-STAR 180 cask with the various as-modeled dimensions indicated. Figures 5.3.6 and 5.3.7 provide the as-modeled dimensions of the impact limiters during normal conditions. The aluminum honeycomb material in the impact limiter is not shown in Figure 5.3.6 because it was conservatively neglected in the MCNP calculations.

The conditions and tests specified in 10CFR 71.71 for normal conditions have no effect on the configuration of the cask. Therefore no additional considerations are necessary for these conditions and tests.

During the MCNP modeling process a few modeling simplifications were made. The

simplifications between model and drawings are listed and discussed here.

F-32 and F-37 Basket Modeling Simplifications

1. The flow holes in the top and bottom 6.0 cm of the basket walls are not explicitly modeled. Rather, a reduced density is used over the region defined by the height of the holes. [PROPRIETARY INFORMATION REMOVED]
2. The holes in the basket shims are modeled with squared rather than rounded corners. This is conservative since it neglects a small amount of material in the analyses.

HI-STAR Modeling Simplifications

1. [PROPRIETARY INFORMATION REMOVED]This localized reduction in the thickness of the bottom of the cask was not modeled. Since there is significant shielding in this area of the HI-STAR, this localized reduction in shielding will not affect the calculated dose rates.

[PROPRIETARY INFORMATION REMOVED]

3. In the modeling of the impact limiters, only the neutron shield (Holtite) and the steel, shown in Figure 5.1.1, were represented. Conservatively, the aluminum honeycomb of the impact limiters was not modeled.

4. The trunnions are removed during transportation and are therefore not explicitly modeled. The resulting void is modeled as a solid material due to the insertion of trunnion "plugs".

5. The bolts utilized for closure [PROPRIETARY INFORMATION REMOVED] lid are not modeled, but rather the bolt hole locations are modeled as a solid material.

6. Penetrations [PROPRIETARY INFORMATION REMOVED]were not modeled. This is acceptable since these penetrations are not aligned and are covered by the port covers, and additionally by the steel structure of the impact limiter. Any streaming through these penetrations would therefore have a negligible effect.

7. All empty spaces in and around the cask are represented by voids in the model. This is acceptable, since any absorption and scattering in air would have a very small effect in comparison to the dose rates at the close distances analyzed here.

5.3.1.2 [PROPRIETARY INFORMATION REMOVED]Fuel and Source Configuration

In the model homogenized regions represent the fuel. Calculations on a similar cask design were performed to determine the acceptability of homogenizing the fuel assembly versus explicit modeling. Based on these calculations it was concluded that it was acceptable to homogenize the fuel assembly without loss of accuracy. [PROPRIETARY INFORMATION REMOVED]

During accident conditions, there is the possibility of cladding damage to High Burnup Fuel (HBF). Subsection 6.3.5 in Chapter 6 discusses credible fuel damage under this condition. It is concluded that only local relocation of broken fuel rod segments is expected, [PROPRIETARY INFORMATION REMOVED]

In the model for the F-32, the fuel is modeled as fresh UO_2 fuel with an enrichment of 5 wt% ^{235}U. In the model for the F-37, the fuel is modeled as fresh UO_2 fuel with an enrichment of 3.5 wt%. This enrichment results in a reactivity that is equivalent to the various loading combinations of fresh and burned fuel, as shown in Chapter 6, and is therefore appropriate for the shielding analysis.

5.3.1.3 Streaming [PROPRIETARY INFORMATION REMOVED]

The HI-STAR 180 cask utilizes Holtite as a neutron absorber in radial and axial directions. [PROPRIETARY INFORMATION REMOVED]

5.3.2 Material Properties

Composition and densities of the various materials used in the HI-STAR 180 shielding analyses are given in Table 5.3.2. See Subsections 1.2.1.5.1 and 1.2.1.6 for further information on the Holtite and Metamic neutron absorber, respectively. [PROPRIETARY INFORMATION REMOVED]All of the materials and their actual geometries are represented in the MCNP model. All steel in the cask was modeled as carbon steel.

Section 3.4 demonstrates that all materials used in the HI-STAR 180 remain at or below their design temperatures during all normal conditions. Therefore, the shielding analysis does not address changes in the material density or composition as a result of temperature changes.

During normal operations, the depletion of B-10 in the Metamic and the Holtite neutron shield is negligible. Based on calculations prepared for a similar cask model, the fraction of B-10 atoms that are depleted in 50 years is less than 1E-6 in both the Metamic and Holtite. Therefore, the shielding analysis does not need to address any changes in the composition of the Metamic or Holtite as a result of neutron absorption.

5.3.3 Tally Specifications

The dose rate values listed in Tables 5.1.1 through 5.1.8, with corresponding dose point locations illustrated in Figure 5.1.1 and 5.1.2, are computed using MCNP volume tallies. In radial direction, the dose locations are represented by cylindrical rings with a thickness of 2 cm each at the surface, at 1 m and at 2 m from the surface. In axial direction they are cylindrical disks with a thickness of 2 cm at various distances from the cask. Further details are discussed below.

HOLTEC INTERNATIONAL COPYRIGHTED MATERIAL

Radial Tallies

- Dose Location 2
  This dose location captures the maximum dose rate around the radial shield cylinder, [PROPRIETARY INFORMATION REMOVED].

- Dose Locations 1 and 3
  These are the dose locations adjacent to the impact limiter skirt surrounding the upper and lower forgings of the cask. [PROPRIETARY INFORMATION REMOVED]

Axial Tallies

The tally volumes located on the top and bottom surfaces, 1 meter and 2 meter positions of the cask were composed the following way:

- Dose Locations 4 and 5
  In axial direction, the tally volumes are circular disks that are divided into radial sections, each about 23 cm wide.

The dose locations for both radial and axial tallies are also described in Section 5.4.4.

HOLTEC INTERNATIONAL COPYRIGHTED MATERIAL

TABLE 5.3.1

[PROPRIETARY INFORMATION REMOVED]

TABLE 5.3.2

[PROPRIETARY INFORMATION REMOVED]

HOLTEC INTERNATIONAL COPYRIGHTED MATERIAL

TABLE 5.3.2 (CONTINUED)

[PROPRIETARY INFORMATION REMOVED]

HOLTEC INTERNATIONAL COPYRIGHTED MATERIAL

TABLE 5.3.2 (CONTINUED)

[PROPRIETARY INFORMATION REMOVED]

HOLTEC INTERNATIONAL COPYRIGHTED MATERIAL

THIS FIGURE IS PROPRIETARY IN ITS ENTIRETY

FIGURE 5.3.1 : [PROPRIETARY INFORMATION REMOVED]

THIS FIGURE IS PROPRIETARY IN ITS ENTIRETY

FIGURE 5.3.2 : [PROPRIETARY INFORMATION REMOVED]

THIS FIGURE IS PROPRIETARY IN ITS ENTIRETY

FIGURE 5.3.3 : [PROPRIETARY INFORMATION REMOVED]

HOLTEC INTERNATIONAL COPYRIGHTED MATERIAL

THIS FIGURE IS PROPRIETARY IN ITS ENTIRETY

FIGURE 5.3.4 : [PROPRIETARY INFORMATION REMOVED]

HOLTEC INTERNATIONAL COPYRIGHTED MATERIAL

THIS FIGURE IS PROPRIETARY IN ITS ENTIRETY

FIGURE 5.3.5 : [PROPRIETARY INFORMATION REMOVED]

THIS FIGURE IS PROPRIETARY IN ITS ENTIRETY

FIGURE 5.3.6: [PROPRIETARY INFORMATION REMOVED]

THIS FIGURE IS PROPRIETARY IN ITS ENTIRETY

FIGURE 5.3.7: [PROPRIETARY INFORMATION REMOVED]

HOLTEC INTERNATIONAL COPYRIGHTED MATERIAL

5.4 SHIELDING EVALUATION

5.4.1 Methods

A significant number of conservative assumptions are applied throughout the shielding calculations. These assumptions will assure that the actual dose rates will always be below the calculated dose rates, and below the regulatory limits. Selected key assumptions are:

[PROPRIETARY INFORMATION REMOVED]

The MCNP-4A code [5.1.1] was used for all of the shielding analyses. MCNP is a continuous energy, three-dimensional, coupled neutron-photon-electron Monte Carlo transport code. Continuous energy cross-section data is represented with sufficient energy points to permit linear-linear interpolation between these points. The individual cross section libraries used for each nuclide are those recommended by the MCNP manual. All of these data are based on ENDF/B-V data. The large user community has extensively benchmarked MCNP against experimental data. References [5.4.2], [5.4.3], and [5.4.4] are three examples of the benchmarking that has been performed. MCNP-4A is the same code that has been used as the shielding code in all of Holtec's dry storage and transportation analyses. Note also that the principal approach in the shielding analysis here is identical to the approach in licensing applications previously reviewed and approved by the USNRC.

[PROPRIETARY INFORMATION REMOVED]

5.4.2 Input and Output Data

[PROPRIETARY INFORMATION REMOVED]The principal input data is therefore the dimensions shown in the drawings in Chapter 1, the fuel specifications, and the material compositions listed in Subsection 5.3. Sample input files for MCNP are provided in Appendices 5.A and 5.B.

[PROPRIETARY INFORMATION REMOVED]The output of the postprocessing are the dose rates listed in this chapter.

5.4.3 Flux-to-Dose-Rate Conversion

5.4.4 [PROPRIETARY INFORMATION REMOVED]External Radiation Levels

Tables 5.1.1 and 5.1.2 provide the maximum dose rates on the surface of the package during normal transport conditions for the HI-STAR 180 with design basis fuel. Tables 5.1.3 and 5.1.4 list the maximum dose rate 2 m from the edge of the transport vehicle during normal conditions. The burnup and cooling time combinations chosen for the tables in that section were the combinations that resulted in maximum dose rates for the normal operation on the surface and at

2 m from the surface, as specified in the regulatory requirements. These combinations may not be all from the same loading condition, but show the highest dose rate at each individual dose location.

Figure 5.1.1 shows the dose locations on the surface and the condition of the HI-STAR 180 Package during normal transport. Each of these dose locations has a corresponding location at 2 m from the surface. The impact limiters are intact and outlined on the figure, but the crushable material is neglected. Dose point locations correspond to results in Tables 5.1.1 through 5.1.4 and are maximum values. The azimuthal dose values are taken from the dose point locations that are shown in Figure 5.3.4. [PROPRIETARY INFORMATION REMOVED]

Dose locations 1, 2 and 3 shown in Figure 5.1.1 and Figure 5.1.2 do not correspond to single dose locations. Rather the dose rates for multiple axial and azimuthal segments were calculated and the highest value was chosen for the corresponding dose location. Dose location 2 is comprised of axial segments [PROPRIETARY INFORMATION REMOVED]. The highest dose rate of these axial segments was chosen as the value for dose location 2. Dose location 1 corresponds to the axial extension of the lower impact limiter that spans [PROPRIETARY INFORMATION REMOVED]. Dose location 3 corresponds to the axial extension of the upper impact limiter that spans [PROPRIETARY INFORMATION REMOVED]. Dose location 4 corresponds to the surface location directly above the [PROPRIETARY INFORMATION REMOVED]in the top impact limiter, and dose location 5 corresponds to the location directly below the [PROPRIETARY INFORMATION REMOVED] in the bottom impact limiter. As mentioned above, the radial extension of the impact limiters beyond the cask surface is neglected for the radial 2 m dose locations, i.e. these dose rates are determined conservatively at a distance of 2 m from the cask surface.

Detailed results are listed in Tables 5.4.2 through 5.4.5. These tables show the highest total dose rates at each dose location for each pattern in each basket. Note that dose rates listed for a single pattern are not necessarily from the same case, since it is unlikely that a single loading condition results in maximum dose rates at all 5 dose locations.

Table 5.4.2 shows that the maximum dose rate on the surface of the cask during normal conditions, with either basket, is at dose location #1. This result is reasonable because this location is on the lower cask skirt where there is less shielding, as can be seen in Figure 5.1.1.

Table 5.4.3 shows that the maximum dose rates at 2 m from the surface of the cask during normal conditions, with either basket, occur at either dose location #2 or dose location #5, depending on the loading plan. At 2 m from the surface, it is expected that the highest dose rates would occur at the midpoints of the cask, either axially (location #2) or radially (location #5). Dose location #4 has additional shielding in the cask lid, which accounts for the dose rate differences in locations 4 & 5. Additionally, localized dose rate peaks would be minimized further from the cask surface, as can be seen by the uniformity of the dose rate results.

The dose rates calculated to determine the distances necessary to comply with the 0.02 mSv/hr requirement specified in 10CFR71.47(b)(4) for any normally occupied space are presented in

HOLTEC INTERNATIONAL COPYRIGHTED MATERIAL

Table 5.4.4. The dose rates presented are maximum values calculated from bounding loading patterns which are discussed in [5.4.6].

Table 5.4.5 shows that the maximum dose rates at 1 m from the surface of the cask during hypothetical accident conditions, with either basket, occur at either dose location #2 or dose location #5, depending on the loading plan. This result is reasonable because of the loss of the neutron shielding.

5.4.5 Fuel Reconfiguration

The structural analyses of fuel rods in Subsection 2.11 show that the fuel is expected to remain essentially undamaged during the hypothetical accident conditions. The design basis calculations for the hypothetical accident conditions therefore use the same model to represent fuel as the calculations for normal conditions. The current subsection presents additional calculations to show that even if some fuel reconfigurations should occur, the dose rates would still be expected to remain below the regulatory limits.

[PROPRIETARY INFORMATION REMOVED]
The results show that the design basis dose rates are bounding in most dose locations. Further, all analyzed fuel reconfiguration scenarios meet the dose rate regulatory requirements. It can therefore be concluded that any fuel reconfiguration during hypothetical accident conditions will not result in dose rates that exceed the regulatory limits, and will in most cases even result in a reduction of dose rates compared to undamaged fuel.

5.4.6 Effect of Uncertainties

The design basis calculations presented in Section 5.1 and Subsection 5.4.4 are based on a range of conservative assumptions, but do not explicitly account for uncertainties in the methodologies, codes and input parameters, that is, it is assumed that the effect of uncertainties is small compared to the numerous conservatisms in the analyses. To show that this assumption is valid, this section presents calculations and results based on a different approach, where calculations are performed as "best estimate" calculations, and then estimated uncertainties are added. The results based on this approach are then compared to results in Subsection 5.4.4.

[PROPRIETARY INFORMATION REMOVED]

Results are presented in Tables 5.4.9 through 5.4.12. The tables show the calculated dose rates, the individual and combined uncertainties, and total dose rates with and without uncertainties. For comparison purposes, the tables also show the dose rates of the design basis calculations. In all cases, the total dose rates, including uncertainties, are comparable to or lower than the

HOLTEC INTERNATIONAL COPYRIGHTED MATERIAL

corresponding values from the design basis calculations. This provides further confirmation that the design basis calculations are reasonable and conservative.

HOLTEC INTERNATIONAL COPYRIGHTED MATERIAL

TABLE 5.4.1

FLUX-TO-DOSE CONVERSION FACTORS
(FROM [5.4.1])

Gamma Energy (MeV)	**(mSv/h)/ (photon/cm^2-s)** †
0.01	3.96E-05
0.03	5.82E-06
0.05	2.90E-06
0.07	2.58E-06
0.1	2.83E-06
0.15	3.79E-06
0.2	5.01E-06
0.25	6.31E-06
0.3	7.59E-06
0.35	8.78E-06
0.4	9.85E-06
0.45	1.08E-05
0.5	1.17E-05
0.55	1.27E-05
0.6	1.36E-05
0.65	1.44E-05
0.7	1.52E-05
0.8	1.68E-05
1.0	1.98E-05
1.4	2.51E-05
1.8	2.99E-05
2.2	3.42E-05

† Values have been multiplied by 10 to convert mrem, as given in [5.4.1], to mSv

TABLE 5.4.1 (CONTINUED)

FLUX-TO-DOSE CONVERSION FACTORS
(FROM [5.4.1])

Gamma Energy (MeV)	**(mSv/h)/ (photon/cm^2-s)** †
2.6	3.82E-05
2.8	4.01E-05
3.25	4.41E-05
3.75	4.83E-05
4.25	5.23E-05
4.75	5.60E-05
5.0	5.80E-05
5.25	6.01E-05
5.75	6.37E-05
6.25	6.74E-05
6.75	7.11E-05
7.5	7.66E-05
9.0	8.77E-05
11.0	1.03E-04
13.0	1.18E-04
15.0	1.33E-04

† Values have been multiplied by 10 to convert mrem, as given in [5.4.1], to mSv

TABLE 5.4.1 (CONTINUED)

FLUX-TO-DOSE CONVERSION FACTORS
(FROM [5.4.1])

Neutron Energy (MeV)	Quality Factor	(mSv/h)/(n/cm^2-s) †, ††
2.5E-8	2.0	3.67E-05
1.0E-7	2.0	3.67E-05
1.0E-6	2.0	4.46E-05
1.0E-5	2.0	4.54E-05
1.0E-4	2.0	4.18E-05
1.0E-3	2.0	3.76E-05
1.0E-2	2.5	3.56E-05
0.1	7.5	2.17E-04
0.5	11.0	9.26E-04
1.0	11.0	1.32E-03
2.5	9.0	1.25E-03
5.0	8.0	1.56E-03
7.0	7.0	1.47E-03
10.0	6.5	1.47E-03
14.0	7.5	2.08E-03
20.0	8.0	2.27E-03

† Values have been multiplied by 10 to convert mrem, as given in [5.4.1], to mSv

†† Includes the Quality Factor

HOLTEC INTERNATIONAL COPYRIGHTED MATERIAL

TABLE 5.4.2

TOTAL DOSE RATES ON THE
SURFACE OF THE HI-STAR 180 PACKAGE FOR NORMAL CONDITIONS
WITH THE F-32 AND F-37 Basket

Dose Point[††] Location	**Total Dose Rate (mSv/h)**					
	Loading Pattern, F-32					
	A	**B**	**C**	**D**	**E**	**F**
1	0.895	0.734	0.822	0.928	0.705	0.799
2	0.401	0.375	0.370	0.400	0.404	0.393
3	0.637	0.532	0.611	0.694	0.507	0.567
4	0.338	0.281	0.320	0.378	0.261	0.304
5	0.414	0.354	0.392	0.440	0.353	0.387
	Loading Pattern, F-37					
	A	**B**	**C**	**D**		
1	0.874	0.764	0.890	0.698		
2	0.426	0.359	0.402	0.386		
3	0.625	0.592	0.661	0.532		
4	0.325	0.315	0.344	0.266		
5	0.394	0.359	0.389	0.348		
10CFR71.47 Limit (mSv/h)	2	2	2	2	2	

[††] Refer to Figure 5.1.1.

TABLE 5.4.3

TOTAL DOSE RATES AT
TWO METERS FROM THE HI-STAR 180 PACKAGE FOR NORMAL CONDITIONS
WITH THE F-32 AND F-37 BASKET

Dose Point[††] Location	**Total Dose Rate (mSv/h)**					
	Loading Pattern, F-32					
	A	**B**	**C**	**D**	**E**	**F**
1	0.0614	0.0571	0.0602	0.0641	0.0554	0.0589
2	0.0788	0.0816	0.0805	0.0814	0.0808	0.0789
3	0.0638	0.0582	0.0628	0.0672	0.0606	0.0623
4	0.0562	0.0466	0.0529	0.0617	0.0433	0.0497
5	0.0861	0.0770	0.0822	0.0854	0.0790	0.0832
	Loading Pattern, F-37					
	A	**B**	**C**	**D**		
1	0.0611	0.0557	0.0612	0.0536		
2	0.0796	0.0769	0.0802	0.0726		
3	0.0655	0.0601	0.0655	0.0596		
4	0.0545	0.0538	0.0607	0.0458		
5	0.0847	0.0744	0.0814	0.0782		
10CFR71.47 Limit (mSv/h)	0.1	0.1	0.1	0.1	0.1	

[††] Refer to Figure 5.1.1.

HOLTEC INTERNATIONAL COPYRIGHTED MATERIAL

TABLE 5.4.4

DISTANCES FOR THE 0.02 mSv/h DOSE RATE REQUIREMENT FOR THE HI-STAR 180 PACKAGE FOR NORMAL CONDITIONS WITH THE F-32 AND F-37 BASKET

Dose Point[††] Location	[PROPRIETARY INFORMATION REMOVED]	**Total Dose Rate (mSv/h)**
F-32		
4		0.0185
5		0.0185
F-37		
4		0.0172
5		0.0190
10CFR71.47 Limit (mSv/h)		0.02

[††] Refer to Figure 5.1.1.

HOLTEC INTERNATIONAL COPYRIGHTED MATERIAL

TABLE 5.4.5

TOTAL DOSE RATES AT
ONE METER FROM THE HI-STAR 180 PACKAGE FOR ACCIDENT CONDITIONS
WITH THE F-32 AND F-37 BASKET

Dose Point†† **Location**	**Dose Rate (mSv/h)**					
	Loading Pattern, F-32					
	A	**B**	**C**	**D**	**E**	**F**
1	4.17	3.24	3.67	4.09	3.02	3.57
2	9.15	7.17	8.15	8.97	6.66	7.81
3	3.89	3.05	3.45	3.86	2.85	3.38
4	1.83	1.52	1.74	2.03	1.42	1.63
5	7.88	6.86	7.57	8.57	7.04	7.70
	Loading Pattern, F-37					
	A	**B**	**C**	**D**		
1	4.17	3.45	4.31	3.00		
2	9.58	7.61	9.68	6.70		
3	3.96	3.23	4.12	2.85		
4	1.77	1.69	1.86	1.46		
5	7.72	7.03	7.41	6.97		
10CFR71.51 Limit (mSv/h)	10	10	10	10	10	

†† Refer to Figure 5.1.2.

HOLTEC INTERNATIONAL COPYRIGHTED MATERIAL

TABLE 5.4.6

TOTAL DOSE RATES AT 1 METER FROM THE HI-STAR 180 PACKAGE FOR HYPOTHETICAL FUEL RECONFIGURATION ACCIDENT CONDITIONS WITH THE F-37 BASKET

Dose Point†† Location	**Dose Rate† (mSv/h)**				
	Configuration, F-37				
	Nominal Reference Case (see Table 5.1.8)	Flat Axial Profile, Increased Fuel Density	Compressed Axial Profile, Increased Fuel Density	Compressed Axial Profile, Decreased Density	10 CFR 71.51 Limit (mSv/h)
1	4.31	5.79	5.57	2.80	10
2	9.68	8.33	8.62	6.09	10
3	4.12	1.36	1.15	2.66	10
4	1.86	0.33	0.22	1.35	10
5	7.72	9.06	7.31	6.26	10

†† Refer to Figure 5.1.2.

† See Subsection 5.4.5 for description of calculations.

HOLTEC INTERNATIONAL COPYRIGHTED MATERIAL

TABLE 5.4.7

[PROPRIETARY INFORMATION REMOVED]

TABLE 5.4.8

DOSE RATE VALUES FOR NORMAL AND ACCIDENT CONDITIONS FOR BOUNDING SCENARIOS WITH MAXIMUM BURNUP AND MINIMUM COOLING TIME COMBINATIONS FOR THE F-37 BASKET, LOADING PATTERN B

Dose Point†† Location	**Normal Conditions 2 m dose rate (Pattern B)**			**Accident Condition 1 m (Pattern B)**		
	[PROPRIETARY INFORMATION REMOVED]	[PROPRIETARY INFORMATION REMOVED]	Total (mSv/h)	[PROPRIETARY INFORMATION REMOVED]	[PROPRIETARY INFORMATION REMOVED])	Total (mSv/h)
Reference Fuel Specification (Table 1.2.9)						
1			0.0557			2.98
2			**0.0769**			7.11
3			**0.0601**			3.03
4			0.0513			1.61
5			0.0713			7.02
Maximum Burnups (Table 1.2.10)						
1			**0.0557**			**3.18**
2			0.0761			**7.61**
3			0.0598			**3.23**
4			**0.0538**			**1.69**
5			0.0660			6.73
Minimum Cooling Times (Table 1.2.10)						
1			0.0528	0.06	2.34	2.40
2			0.0760			5.71
3			0.0581			2.45
4			0.0438			1.40
5			**0.0744**			**7.03**

†† Refer to Figures 5.1.1 and 5.1.2.

HOLTEC INTERNATIONAL COPYRIGHTED MATERIAL

TABLE 5.4.9

[PROPRIETARY INFORMATION REMOVED]

HOLTEC INTERNATIONAL COPYRIGHTED MATERIAL

Table 5.4.10

[PROPRIETARY INFORMATION REMOVED]

HOLTEC INTERNATIONAL COPYRIGHTED MATERIAL

Table 5.4.11

[PROPRIETARY INFORMATION REMOVED]

HOLTEC INTERNATIONAL COPYRIGHTED MATERIAL

Table 5.4.12

[PROPRIETARY INFORMATION REMOVED]

HOLTEC INTERNATIONAL COPYRIGHTED MATERIAL

Table 5.4.13

[PROPRIETARY INFORMATION REMOVED]

HOLTEC INTERNATIONAL COPYRIGHTED MATERIAL

5.5 REFERENCES

The following generic industry and Holtec produced references may have been consulted in the preparation of this document. Where specifically cited, the identifier is listed in the SAR text or table. Active Holtec Calculation Packages which are the repository of all relevant licensing and design basis calculations are annotated as "latest revision". Submittal of the latest revision of such Calculation Packages to the USNRC and other regulatory authorities during the course of regulatory reviews is managed under the company's Configuration Control system.

[5.1.1] J.F. Briesmeister, Ed., "MCNP - A General Monte Carlo N-Particle Transport Code, Version 4A." Los Alamos National Laboratory, LA-12625-M (1993).

[5.1.2] O.W. Hermann, C.V. Parks, "SAS2H: A Coupled One-Dimensional Depletion and Shielding Analysis Module," NUREG/CR-0200, Revision 6, (ORNL/NUREG/CSD-2/V2/R6), Oak Ridge National Laboratory, September 1998.

[5.1.3] O.W. Hermann, R.M. Westfall, "ORIGEN-S: SCALE System Module to Calculate Fuel Depletion, Actinide Transmutation, Fission Product Buildup and Decay, and Associated Radiation Source Terms," NUREG/CR-0200, Revision 6, (ORNL/NUREG/CSD-2/V2/R6), Oak Ridge National Laboratory, September 1998.

[5.1.4] HI-STAR 100 SAR, Rev. 12, October 2007 (Docket 71-9261), and HI-STORM FSAR, Rev. 7, August 2008 (Docket 72-1014)

[5.1.5] B.L. Broadhead, "Recommendations for Shielding Evaluations for Transport and Storage Packages," NUREG/CR-6802 (ORNL/TM-2002/31), Oak Ridge National Laboratory, May 2003.

[5.2.1] NUREG-1617, SRP for Transportation Packages for Spent Nuclear Fuel, USNRC, Washington, DC, March 2000.

[5.2.2] A. Luksic, "Spent Fuel Assembly Hardware: Characterization and 10CFR 61 Classification for Waste Disposal," PNL-6906-vol. 1, Pacific Northwest Laboratory, June 1989.

[5.2.3] M. D. DeHart and O. W. Hermann, "An Extension of the Validation of SCALE (SAS2H) Isotopic Predictions for PWR Spent Fuel," ORNL/TM-13317, Oak Ridge National Laboratory, September 1996.

[5.2.4] O. W. Hermann, et al., "Technical Support for a Proposed Decay Heat Guide Using SAS2H/ORIGEN-S Data," NUREG/CR-5625, ORNL-6698, Oak Ridge National Laboratory, September 1994.

[5.4.1] "American National Standard Neutron and Gamma-Ray Flux-to-Dose Rate Factors", ANSI/ANS-6.1.1-1977.

[5.4.2] D. J. Whalen, et al., "MCNP: Photon Benchmark Problems," LA-12196, Los Alamos National Laboratory, September 1991.

[5.4.3] D. J. Whalen, et al., "MCNP: Neutron Benchmark Problems," LA-12212, Los Alamos National Laboratory, November 1991.

[5.4.4] J. C. Wagner, et al., "MCNP: Criticality Safety Benchmark Problems," LA-12415, Los Alamos National Laboratory, October 1992.

[5.4.5] Holtec International Report HI-2073653, "Source Term Analysis for the HI-STAR 180", Latest Revision. (Holtec Proprietary)*

[5.4.6] Holtec International Report HI-2073655, "Shielding Analysis for the HI-STAR 180", Latest Revision. (Holtec Proprietary)*

[5.4.7] ORNL/M-5503, 'The Radioactive Materials Packaging Handbook", Oak Ridge National Laboratory, 1998.

* Supporting document submitted with the HI-STAR 180 License Application (Docket 71-9325).

HOLTEC INTERNATIONAL COPYRIGHTED MATERIAL

CHAPTER 6 CRITICALITY EVALUATION

6.0 INTRODUCTION

This chapter documents the criticality evaluation of the HI-STAR 180 Cask for the packaging and transportation of radioactive materials (spent nuclear fuel) in accordance with 10CFR71. The results of this evaluation demonstrate that an infinite number of HI-STAR 180 Packages with variations in internal and external moderation remain subcritical with a margin of subcriticality greater than 0.05Δk. This corresponds to a criticality safety index (CSI) of zero (0.0) and demonstrates compliance with criticality requirements in 10 CFR 71.55 and 10 CFR 71.59 for normal and hypothetical accident conditions of transport.

In addition to demonstrating that the criticality safety acceptance criteria are satisfied, this chapter describes the HI-STAR 180 design structures and components important to criticality safety. It also provides limiting fuel characteristics. With the cask and fuel description, this chapter gives data in sufficient detail to allow the criticality evaluation of the package.

HOLTEC INTERNATIONAL COPYRIGHTED MATERIAL

6.1 DESCRIPTION OF CRITICALITY DESIGN

6.1.1 Design Features

The containment system of the HI-STAR 180 is a cylindrical shell with a flat bottom and flat bolted lids at the top. Inside the containment system, fuel assemblies are placed in a basket structure to maintain their location.

[PROPRIETARY TEXT REMOVED]

For general details of these baskets see the description and drawings in Section 1.3. Sketches showing the basket details that are important for criticality safety are shown in Section 6.3.1 of this chapter.

Criticality safety of the HI-STAR 180 depends on the following principal design features:

- The inherent geometry of the fuel basket design within the cask. [PROPRIETARY TEXT REMOVED];
- The incorporation of permanent fixed neutron-absorbing material in the fuel basket structure. [PROPRIETARY TEXT REMOVED];
- Administrative limits on the maximum enrichment (F-32 and F-37) and minimum average assembly burnup (F-37). [PROPRIETARY TEXT REMOVED];
- The ability of the cask to prevent water inleakage under accident conditions. [PROPRIETARY TEXT REMOVED]; and

[PROPRIETARY TEXT REMOVED]

Applicable codes, standards, and regulations, or pertinent sections thereof, include the following:

- U.S. Code of Federal Regulations, "Packaging and Transportation of Radioactive Materials," Title 10, Part 71.
- NUREG-1617, "Standard Review Plan for Transportation Packages for Spent Nuclear Fuel" USNRC, Washington D.C., March 2000.
- U.S. Code of Federal Regulations, "Prevention of Criticality in Fuel Storage and Handling," Title 10, Part 50, Appendix A, General Design Criterion 62.
- USNRC Standard Review Plan, NUREG-0800, Section 9.1.2, "New and Spent Fuel Storage", Rev. 4, March 2007.

- USNRC Interim Staff Guidance 8 (ISG-8), Revision 2, "Burnup Credit in the Criticality Safety Analyses of PWR Spent Fuel in Transport and Storage Casks".

- USNRC Interim Staff Guidance 19 (ISG-19), Revision 0, "Moderator Exclusion under Hypothetical Accident Conditions and Demonstrating Subcriticality of Spent Fuel under the Requirements of 10 CFR 71.55(e)".

6.1.2 Summary Table of Criticality Evaluations

The principal calculational results address the following conditions:

- A single package, under the conditions of 10 CFR 71.55(b), (d), and (e);
- An array of undamaged packages, under the conditions of 10 CFR 71.59(a)(1); and
- An array of damaged packages, under the conditions of 10 CFR 71.59(a)(2)

Results are summarized in Table 6.1.1 for the most reactive configurations and fuel condition. The table contains the maximum k_{eff}, and the uncertainty for each case. The results are conservatively evaluated for the worst combination of manufacturing tolerances (as identified in Section 6.3), and including the calculational bias, uncertainties, and calculational statistics. For package arrays, an infinite number of packages are analyzed. The maximum k_{eff} value for all cases is below the regulatory limit of 0.95. The results therefore demonstrate that the HI-STAR 180 Package is in full compliance with 10CFR71 (71.55(b), (d), and (e) and 71.59(a)(1) and (a)(2)). Table 6.1.2 presents the burnup requirement for the F-37 basket. Figure 1.2.4 in Section 1.2 shows basket locations in the F-37 basket referenced in Table 6.1.2.

To assure the true reactivity will always be less than the calculated reactivity, the following conservative assumptions were made:

[PROPRIETARY TEXT REMOVED]

6.1.3 Criticality Safety Index

The calculations for package arrays are performed for infinite arrays of HI-STAR 180 Packages under flooded conditions and results are below the regulatory limit, i.e. N is infinite. Therefore, the criticality safety index (CSI) is zero (0.0).

HOLTEC INTERNATIONAL COPYRIGHTED MATERIAL

Table 6.1.1

SUMMARY OF THE CRITICALITY RESULTS
TO DEMONSTRATE COMPLIANCE WITH 10CFR71.55 AND 10CFR71.59

F-32				
Configuration	% Internal Moderation	% External Moderation	Applicable Requirement	Maximum[1] k_{eff}
Single Package, unreflected	100%	0%	n/a	0.9419
Single Package, fully reflected	100%	100%	10CFR71.55 (b) and (d)	0.9429
Containment, fully reflected	100%	100%		0.9420
Single Package, Damaged	0%	100%	10CFR71.55 (e)	0.3800
Infinite Array of Undamaged Packages	0%	0%	10CFR71.59 (a)(1)	0.4025
Infinite Array of Damaged Packages	0%	100%	10CFR71.59 (a)(2)	0.4080

F-37				
Configuration	% Internal Moderation	% External Moderation	Applicable Requirement	Maximum[1] k_{eff}
Single Package, unreflected	100%	0%	n/a	0.9483
Single Package, fully reflected	100%	100%	10CFR71.55 (b) and (d)	0.9487
Containment, fully reflected	100%	100%		0.9463
Single Package, Damaged	0%	100%	10CFR71.55 (e)	0.3716
Infinite Array of Undamaged Packages	0%	0%	10CFR71.59 (a)(1)	0.3891
Infinite Array of Damaged Packages	0%	100%	10CFR71.59 (a)(2)	0.3961

1 The maximum k_{eff} is equal to the sum of the calculated k_{eff}, two standard deviations, the code bias, and the uncertainty in the code bias. For all cases, the standard deviation ranges from 0.0003 to 0.0007. The combined bias and bias uncertainty is 0.0027 for the F-32, and 0.0107 for the F-37.

Table 6.1.2

Burnup Requirements for UO_2 fuel the F-37 Basket

Configuration	Fresh UO_2† and MOX†† Fuel	Spent UO_2† Fuel	
	Region (see Figure 1.2.2)	Region (see Figure 1.2.2)	Minimum Assembly Burnup (GWd/mtU)
1	5	1,2,3,4,6,7,8	22
2	2, 4, 5	1,3,6,7,8	25
3	1, 4, 5	2,3,6,7,8	25
4	1, 3, 5	2,4,6,7,8	27
5	1,3,8	2,4,5,6,7	27
6	1,5,8	2,3,4,6,7	31
7	1,3,5,8	2,4,6,7	34
8	6	1,2,3,4,5,7,8	35
9	2,5,8	1,3,4,6,7	34

† Maximum Initial Enrichment of UO_2 Fuel is 5.0 wt% ^{235}U.
†† For the bounding composition of MOX fuel see Section 6.2

HOLTEC INTERNATIONAL COPYRIGHTED MATERIAL

6.2 FISSLE MATERIAL CONTENT

6.2.1 General

[PROPRIETARY TEXT REMOVED]

6.2.2 Fuel Parameters

The various fuel assemblies to be qualified all have similar principal characteristics, such as array size and number of fuel rods and guide tubes, which are listed in Table 6.2.1. However, they differ in some of the details, such as fuel rod and guide tube dimensions. Previous studies [6.2.1] have shown that the bounding conditions correspond to:

[PROPRIETARY TEXT REMOVED]

6.2.3 MOX Assemblies

[PROPRIETARY TEXT REMOVED]

HOLTEC INTERNATIONAL COPYRIGHTED MATERIAL

TABLE 6.2.1

[PROPRIETARY TEXT REMOVED]

HOLTEC INTERNATIONAL COPYRIGHTED MATERIAL

TABLE 6.2.2

[PROPRIETARY TEXT REMOVED]

HOLTEC INTERNATIONAL COPYRIGHTED MATERIAL

TABLE 6.2.3

[PROPRIETARY TEXT REMOVED]

HOLTEC INTERNATIONAL COPYRIGHTED MATERIAL

6.3 GENERAL CONSIDERATIONS

In compliance with the requirements of 10CFR71.31(a)(1), 10CFR71.33(a)(5), and 10CFR71.33(b), this section provides a description of the HI-STAR 180 in sufficient detail to identify the package accurately and provide a sufficient basis for the evaluation of the package.

6.3.1 Model Configuration

Figures 6.3.1 through 6.3.4 show representative cross sections of the criticality models for the two baskets. Figure 6.3.1 shows a single cell from the basket. The cells are identical for both baskets, except for the width of the flux trap. Figures 6.3.2 and 6.3.3 show the entire F-32 and F-37 basket, respectively. Figure 6.3.4 shows a sketch of the calculational model in the axial direction.

[PROPRIETARY TEXT REMOVED]

The basket geometry can vary due to manufacturing tolerances and due to potential deflections of basket walls as the result of accident conditions. The basket tolerances are defined on the drawings in Chapter 1. [PROPRIETARY TEXT REMOVED]

Based on the calculations, the conservative dimensional assumptions listed in Table 6.3.2 were determined for the basket designs. Because the reactivity effect (positive or negative) of the manufacturing tolerances is not assembly dependent, these dimensional assumptions were employed for all criticality analyses.

[PROPRIETARY TEXT REMOVED]

Variations of other parameters, namely fuel density and water temperature in the cask, were analyzed using CASMO-4. The results are presented in Table 6.3.3, and show that the maximum fuel density and the minimum water temperature (corresponding to a maximum water density) are bounding. These conditions are therefore used in all further calculations.

Calculations documented in Chapter 2 show that the baskets stay within the applicable structural limits during all normal and accident conditions. Furthermore, the neutron poison material is an integral and non-removable part of the basket material, and its presence is therefore not affected by the accident conditions. Except for the potential deflection of the basket walls that is already considered in the criticality models, damage to the cask under accident conditions is limited to damage to the neutron absorber on the outside of the cask. However, this external absorber is already neglected in the calculational models. Other parameters important to criticality safety are fuel burnup and enrichment, which are not affected by the hypothetical accident conditions. The calculational models of the cask and basket for the accident conditions are therefore identical to the models for normal conditions, and no separate models need to be developed for accident conditions.

There are, however, differences between the normal and accident models in terms of internal and external water density and external reflections. The effect of these conditions is discussed in Section 6.3.4.

Additionally, studies are performed to evaluate the potential effect of fuel reconfiguration during accident conditions. These are presented in Section 6.3.5.

6.3.2 Material Properties

Composition of the various components of the principal designs of the HI-STAR 180 Package is listed in Table 6.3.4. In this table only the composition of fresh fuel is listed. For a discussion on the composition of spent fuel for burnup credit see Appendix 6.B.

The HI-STAR 180 is designed such that the fixed neutron absorber will remain effective for a period greater than 60 years, and there are no credible means to lose it. A detailed physical description, historical applications, unique characteristics, service experience, and manufacturing quality assurance of the fixed neutron absorber are provided in Subsection 1.2.1.6.

The continued efficacy of the fixed neutron absorber is assured by acceptance testing, documented in Subsection 8.1.5.4, to validate the ^{10}B (poison) concentration in the fixed neutron absorber. To demonstrate that the neutron flux from the irradiated fuel results in a negligible depletion of the poison material, an MCNP4a calculation of the number of neutrons absorbed in the ^{10}B was performed previously for the HI-STAR 100 that showed that the fraction of ^{10}B atoms destroyed during the service life in the fixed neutron absorber by neutron absorption is negligible. Therefore, there is no need to provide a surveillance or monitoring program to verify the continued efficacy of the neutron absorber.

The only materials affected by the accident conditions are the Holtite neutron absorber on the outside of the cask, and the impact limiters. None of these materials are considered in the criticality model. Therefore, material properties of the materials used in the criticality analyses are not affected by the accidents.

6.3.3 Computer Codes and Cross Section Libraries

The criticality analyses use the same codes, MCNP4a and CASMO-4, that were used for Holtec's dry storage and transportation systems reviewed and approved by the NRC under separate dockets.

The principal code for the criticality analysis is the general three-dimensional continuous energy Monte Carlo N-Particle code MCNP4a [6.3.1] developed at the Los Alamos National Laboratory. MCNP4a was selected because it has been extensively used and verified and has all of the necessary features for this analysis. MCNP4a design basis calculations used continuous energy cross-section data, based on ENDF/B-V, as distributed with the code.

HOLTEC INTERNATIONAL COPYRIGHTED MATERIAL

[PROPRIETARY TEXT REMOVED]

CASMO-4 [6.3.2 – 6.3.4] was used for determining some incremental reactivity effects (see Section 6.3.1). [PROPRIETARY TEXT REMOVED]Additionally, CASMO-4 was used to determine the isotopic composition of spent fuel for burnup credit in the HI-STAR 180 (see Appendix 6.B).

6.3.4 Demonstration of Maximum Reactivity

6.3.4.1 Internal and External Moderation

The regulations in 10CFR71.55 include the requirement that the package remains subcritical when assuming moderation to the most reactive credible extent. The regulations in 10CFR71.59 require subcriticality for package arrays under different moderation conditions. Subsections 6.3.4.1.1 through 6.3.4.4 present various studies to confirm or identify the most reactive configuration or moderation condition. Specifically, the following conditions are analyzed:
[PROPRIETARY TEXT REMOVED]
The calculations that specifically demonstrate compliance with the individual requirements of 10CFR71.55 and 10CFR71.59 are presented in Sections 6.4 through 6.6.

Regarding the effect of low moderator density it is noted that with a neutron absorber present (i.e., the neutron poison integral to the walls of the storage compartments), the phenomenon of a peak in reactivity at a hypothetical low moderator density (sometimes called "optimum" moderation) does not occur to any significant extent. In a definitive study, Cano, et al. [6.3.5] has demonstrated that the phenomenon of a peak in reactivity at low moderator densities does not occur when strong neutron absorbing material is present or in the absence of large water spaces between fuel assemblies. Nevertheless, calculations for a single reflected cask and for infinite arrays of casks were made to confirm that the phenomenon does not occur with low density water inside or outside the HI-STAR 180.

[PROPRIETARY TEXT REMOVED]

6.3.4.1.1 Single Package Evaluation

The calculational model for a single package consists of the HI-STAR Cask surrounded by a hexagonal box filled with water. The neutron absorber on the outside of the HI-STAR is neglected, since it might be damaged under accident conditions, and since it is conservative to replace the neutron absorber (Holtite) with a neutron reflector (water). The minimum water thickness on each side of the cask is 30 cm, which effectively represents full water reflection. The outer surfaces of the surrounding box are conservatively set to be fully reflective, which effectively models a three dimensional array of casks with a minimum surface to surface distance of 60 cm. The calculations with internal and external moderators of various densities are shown in Table 6.3.6. For comparison purposes, a calculation for a single, unreflected cask (Case 1) is

also included in Table 6.3.6. At 100% external moderator density, Case 2 corresponds to a single, fully-flooded cask, fully reflected by water. Figure 6.3.5 plots calculated k_{eff} values as a function of internal moderator density for 100% external moderator density (i.e., full water reflection).

Results listed in Table 6.3.6 and plotted in Figure 6.3.5 support the following conclusions:

- The calculated k_{eff} for a fully-flooded cask is independent of the external moderator (the small variations in the listed values are due to statistical uncertainties which are inherent to the calculational method (Monte Carlo)); and

- Reducing the internal moderation results in a monotonic reduction in reactivity, with no evidence of any optimum moderation. Thus, the fully flooded condition corresponds to the highest reactivity, and the phenomenon of optimum low-density moderation does not occur and is not applicable to the HI-STAR 180.

6.3.4.1.2 Evaluation of Package Arrays

In terms of reactivity, the normal conditions of transport (i.e., no internal or external moderation) are bounded by the hypothetical accident conditions of transport. Therefore, the calculations in this section evaluate arrays of HI-STAR 180 Packages under hypothetical accident conditions (i.e, internal and external moderation by water to the most reactive credible extent and no neutron shield present).

In accordance with 10CFR71.59 requirements, calculations were performed to simulate an infinite three-dimensional square array of internally fully-flooded (highest reactivity) casks with varying cask spacing and external moderation density. The maximum k_{eff} results of these calculations are listed in Table 6.3.7 and confirm that the individual casks in a square-pitched array are independent of external moderation and cask spacing.

[PROPRIETARY TEXT REMOVED]

The calculations demonstrate that the thick steel wall of the overpack is more than sufficient to preclude neutron coupling between casks, consistent with the findings of Cano, et al [6.3.5]. Neglecting the Holtite neutron shielding in the calculational model provides further assurance of conservatism in the calculations.

6.3.4.2 Partial Flooding

To demonstrate that the HI-STAR 180 would remain subcritical if water were to leak into the containment system, as required by 10CFR71.55, calculations in this section address partial flooding in the HI-STAR 180 and demonstrate that the fully flooded condition is the most reactive.

The reactivity changes during the flooding process were evaluated for the F-32 in both the vertical and horizontal positions. For these calculations, the cask is partially filled (at various levels) with full density (1.0 g/cm^3) water and the remainder of the cask is filled with steam consisting of ordinary water at partial density (0.002 g/cm^3). Results of these calculations are shown in Table 6.3.11.

Additional calculations are performed for the F-37, with burned fuel in the cask, and the cask in the vertical orientation. [PROPRIETARY TEXT REMOVED] The results are presented in Table 6.3.16. The table also shows the reference case with the fully flooded cask.

In all cases, for both the F-32 and F-37, the reactivity increases monotonically as the water level rises, confirming that the most reactive condition is fully flooded. The fully flooded case therefore represents the bounding condition for all basket types.

6.3.4.3 Clad Gap Flooding

The reactivity effect of flooding the fuel rod pellet-to-clad gap regions, in the fully flooded condition, has been investigated. Table 6.3.12 presents maximum k_{eff} values that demonstrate the positive reactivity effect associated with flooding the pellet-to-clad gap regions. These results confirm that it is conservative to assume that the pellet-to-clad gap regions are flooded. For all cases that involve flooding, the pellet-to-clad gap regions are assumed to be flooded.

6.3.4.4 Preferential Flooding

Preferential flooding of the baskets is not possible [PROPRIETARY TEXT REMOVED].

6.3.4.5 Eccentric Positioning of Assemblies in Fuel Storage Cells

In this subsection, studies are presented to determine the reactivity effect of eccentric positioning of fuel assemblies in the fuel storage cells, and the conditions with the highest maximum k_{eff} are identified.

To conservatively account for eccentric fuel positioning in the fuel storage cells, three different configurations are analyzed, and the results are compared to determine the bounding configuration:

- Cell Center Configuration: All assemblies centered in their fuel storage cell;
- Basket Center Configuration: All assemblies in the basket are moved as closely to the center of the basket as permitted by the basket geometry; and
- Basket Periphery Configuration: All assemblies in the basket are moved furthest away from the basket center, and as closely to the periphery of the basket as possible.

The results are presented in Table 6.3.5. The table shows the maximum k_{eff} value for centered and the two eccentric configurations for each condition, and the difference in k_{eff} between the

centered and eccentric positioning. The results and conclusions are summarized as follows:

- For both the F-32 and F-37 basket, the cell centered configuration results in the highest reactivity.

Therefore, all further calculations, including those that demonstrate compliance with 10CFR71 requirements, are performed with assemblies centered in the basket cells.

6.3.5 Potential Fuel Reconfiguration under Accident Conditions

The cask is designed to remain internally dry under any accident conditions. Therefore, any fuel reconfiguration under accident conditions would be of no consequences. Nevertheless, as a defense-in-depth, analyses are performed assuming coinciding fuel reconfiguration and flooding of the cask.

[PROPRIETARY TEXT REMOVED]

In summary, these results show that credible damage of the fuel assemblies from transport accident conditions will not have a significant effect on the reactivity of the package.

6.3.6 Partial Loading

Each basket cell is completely surrounded by the basket walls containing neutron absorber material (B_4C). Under a partial loading situation, i.e. where one or more basket location are not occupied with fuel, the amount of fissile material is obviously reduced. Also, under the bounding condition of a fully flooded cask, the amount of water is increased. This will result in an increased moderation of neutrons in the empty cell locations. This increased moderation will increase the effectiveness of the surrounding thermal neutron absorber. Described differently, the now empty cell locations will act as additional flux traps. Therefore, due to the reduced amount of fissile material, and the increased neutron absorption, the reactivity of the package under partial loading conditions will be reduced, and will always be bound by the fully loaded conditions. No further evaluations of this condition are therefore necessary.

HOLTEC INTERNATIONAL COPYRIGHTED MATERIAL

Table 6.3.1

[PROPRIETARY TEXT REMOVED]

HOLTEC INTERNATIONAL COPYRIGHTED MATERIAL

Table 6.3.2

[PROPRIETARY TEXT REMOVED]

HOLTEC INTERNATIONAL COPYRIGHTED MATERIAL

Table 6.3.3

CASMO-4 CALCULATIONS FOR EFFECT OF TOLERANCES AND TEMPERATURE

Change in Nominal Parameter	Δk Maximum Tolerance F-32	Action/Modeling Assumption
Increase UO_2 Density to Maximum	0.0013 max. = 10.52 g/cc nom. = 10.42 g/cc	Assume max UO_2 density
Increase in Temperature 20°C 40°C 70°C 100°C	 Ref. -0.0034 -0.0103 -0.0190	Assume 20°C
10% Void in Moderator 20°C with no void 20°C 100°C	 Ref. -0.0472 -0.0657	Assume no void

HOLTEC INTERNATIONAL COPYRIGHTED MATERIAL

Table 6.3.4

[PROPRIETARY TEXT REMOVED]

HOLTEC INTERNATIONAL COPYRIGHTED MATERIAL

Table 6.3.4 (continued)

[PROPRIETARY TEXT REMOVED]

Table 6.3.4 (continued)

[PROPRIETARY TEXT REMOVED]

Table 6.3.5

HOLTEC INTERNATIONAL COPYRIGHTED MATERIAL

Table 6.3.6

MAXIMUM REACTIVITIES WITH REDUCED WATER DENSITIES FOR CASK ARRAYS†

	Water Density		MCNP4a Results		
Case Number	Internal	External	HI-STAR 180		
			Max. k_{eff}††	1 σ	EALF (eV)
1	100%	single cask	0.9419	0.0006	0.3781
2	100%	100%	0.9429	0.0005	0.3802
3	100%	70%	0.9429	0.0005	0.3788
4	100%	50%	0.9434	0.0006	0.378
5	100%	20%	0.9431	0.0007	0.3792
6	100%	10%	0.9442	0.0006	0.3785
7	100%	5%	0.9435	0.0006	0.3779
8	100%	0%	0.9430	0.0005	0.3772
9	70%	0%	0.8211	0.0006	0.9142
10	50%	0%	0.7179	0.0005	2.6428
11	20%	0%	0.5293	0.0004	100.69
12	10%	0%	0.4753	0.0003	1086.9
13	5%	0%	0.4550	0.0002	5195.3
14	10%	100%	0.4705	0.0003	1158.3

† For an infinite hexagonal array of casks with 60 cm spacing between cask surfaces.

†† Maximum k_{eff} includes the bias, uncertainties, and calculational statistics, evaluated for the worst case combination of manufacturing tolerances.

HOLTEC INTERNATIONAL COPYRIGHTED MATERIAL

Table 6.3.7

[PROPRIETARY TEXT REMOVED]

Table 6.3.8

[PROPRIETARY TEXT REMOVED]

Table 6.3.9

[PROPRIETARY TEXT REMOVED]

Table 6.3.10

HOLTEC INTERNATIONAL COPYRIGHTED MATERIAL

Table 6.3.11

[PROPRIETARY TEXT REMOVED]

HOLTEC INTERNATIONAL COPYRIGHTED MATERIAL

Table 6.3.12

[PROPRIETARY TEXT REMOVED]

HOLTEC INTERNATIONAL COPYRIGHTED MATERIAL

Table 6.3.13

[PROPRIETARY TEXT REMOVED]

HOLTEC INTERNATIONAL COPYRIGHTED MATERIAL

Table 6.3.14

[PROPRIETARY TEXT REMOVED]

HOLTEC INTERNATIONAL COPYRIGHTED MATERIAL

Table 6.3.15

[PROPRIETARY TEXT REMOVED]

HOLTEC INTERNATIONAL COPYRIGHTED MATERIAL

Table 6.3.16

[PROPRIETARY TEXT REMOVED]

HOLTEC INTERNATIONAL COPYRIGHTED MATERIAL

THIS FIGURE IS PROPRIETARY IN ITS ENTIRETY

FIGURE 6.3.1 [PROPRIETARY TEXT REMOVED]

HOLTEC INTERNATIONAL COPYRIGHTED MATERIAL

THIS FIGURE IS PROPRIETARY IN ITS ENTIRETY

FIGURE 6.3.2 [PROPRIETARY TEXT REMOVED]

HOLTEC INTERNATIONAL COPYRIGHTED MATERIAL

THIS FIGURE IS PROPRIETARY IN ITS ENTIRETY

FIGURE 6.3.3 [PROPRIETARY TEXT REMOVED]

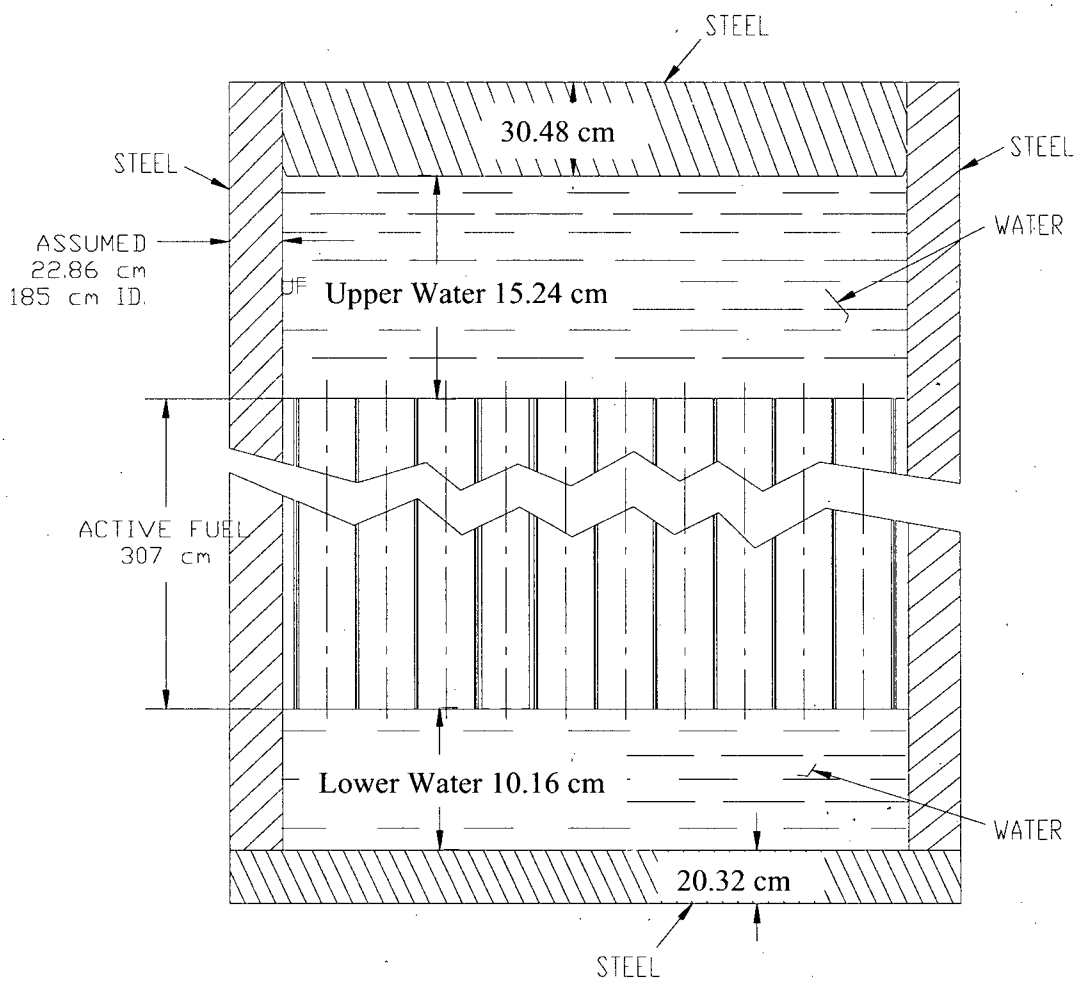

FIGURE 6.3.4 SKETCH OF THE CALCULATIONAL MODEL IN THE AXIAL DIRECTION

HOLTEC INTERNATIONAL COPYRIGHTED MATERIAL

Figure 6.3.5: [PROPRIETARY TEXT REMOVED]

HOLTEC INTERNATIONAL COPYRIGHTED MATERIAL

6.4 SINGLE PACKAGE EVALUATION

6.4.1 Configuration

The calculations in this section demonstrate that a single HI-STAR 180 Package remains subcritical for all credible conditions of moderation, and that the package fulfills all requirements of 10CFR71.55.

In modeling the single package, the following considerations are applied:

- The bounding geometric and temperature assumptions identified in Tables 6.3.2 and 6.3.3 are used
- The assemblies are centered in the cell locations, which results in the highest k_{eff} as demonstrated in Section 6.3.4.5
- The pellet to clad gap is assumed to be flooded (see Section 6.3.4.3)
- The baskets are assumed to be loaded with fuel of the maximum permissible reactivity, i.e.

[PROPRIETARY TEXT REMOVED]

Normal Conditions

The studies in sections 6.3.4.1 through 6.3.4.4 demonstrate that the moderation by water to the most reactive credible extent corresponds to the internally fully flooded condition of the basket, with the pellet-to-clad gap in the fuel rods also flooded with water. The external moderation has a statistically negligible effect.

Under normal condition, water is assumed to leak into the package, consistent with 10 CFR 71.55. Flooding with full density water is assumed, since this is the bounding condition as shown in Section 6.3.4.

To demonstrate compliance with 10CFR71.55 under normal conditions, the following calculations are performed for the HI-STAR 180 design:

[PROPRIETARY TEXT REMOVED]

To satisfy the requirements of 10CFR71.55 (b)(1), the calculations are performed

[PROPRIETARY TEXT REMOVED]

The maximum k_{eff} values for all these cases, calculated with 95% probability at the 95% confidence level, are listed in Table 6.4.1 for the F-32 basket and in Table 6.4.2 for the F-37 basket. Overall, these results confirm that the effective multiplication factor (k_{eff}), including all biases and uncertainties at a 95-percent confidence level, does not exceed 0.95 under normal conditions of transport.

Additional calculations (CASMO-4) at elevated temperatures confirm that the temperature coefficients of reactivity are negative as shown in Table 6.3.3. This confirms that the calculations are conservative.

Accident Conditions

The analyses presented in Chapter 2 and Chapter 3 demonstrate that the damage resulting from the hypothetical accident conditions of transport are limited to a loss of the neutron shield material as a result of the hypothetical fire accident. Because the criticality analyses do not take credit for the neutron shield material (Holtite), this condition has no effect on the criticality analyses.

The HI-STAR 180 is designed for high burnup fuel (HBF), i.e. for fuel with burnups larger than 45 GWd/mtU. For fuel of this burnup, there are concerns that the fuel cladding could be damaged under accident conditions, with a potential effect on reactivity. Chapter 2 demonstrates that the cask remains leaktight under all credible accident conditions. [PROPRIETARY TEXT REMOVED]

In summary, the hypothetical transport accidents have no adverse effect on the geometric form of the package contents important to criticality safety, and thus, are limited to the effects on internal and external moderation evaluated in Subsection 6.3.4.1.

To demonstrate compliance with 10CFR71.55 under accident conditions, the following calculations are performed for the HI-STAR 180 design:

- Single cask, internally dry, with full external water moderation. As for the single cask under normal conditions, the full external water moderation is modeled as water with a thickness of about 300 cm. Fuel is modeled as undamaged, since any small rearrangements of fuel as a result of the accident would have a negligible effect, compared to the safety margin for this condition. The external neutron moderator is conservatively neglected in the model. This case addresses the requirement of 10CFR71.55 (e).

[PROPRIETARY TEXT REMOVED]

6.4.2 Results

[PROPRIETARY TEXT REMOVED]

Appendix 6.A presents the critical experiment benchmarking for fresh UO_2 and MOX fuel and the derivation of the corresponding bias and standard error of the bias (95% probability at the 95% confidence level).

HOLTEC INTERNATIONAL COPYRIGHTED MATERIAL

See Appendix 6.B, Section 6.B.3, for the critical experiment benchmarking for spent fuel.

The results are listed in Table 6.4.1 for the F-32 basket and in Table 6.4.2 for the F-37 basket. For the F-37 basket, all 9 configurations defined in Table 6.1.2 are analyzed for an internally flooded, unreflected cask. Configuration 2 shows the highest reactivity. This configuration is therefore the only configuration analyzed to show compliance with 10CFR71.55, and for the evaluations of package arrays in the following sections 6.5 and 6.6.

HOLTEC INTERNATIONAL COPYRIGHTED MATERIAL

Table 6.4.1

HI-STAR 180 SINGLE PACKAGE WITH F-32 BASKET

Configuration	% Internal Moderation	% External Moderation	Max.‡ k_{eff}	1 σ	EALF (eV)
Single Package, fully reflected	100%	100%	0.9429	0.0005	0.3802
Containment, fully reflected	100%	100%	0.9420	0.0006	0.3784
Single Package, Damaged	0%	100%	0.3800	0.0004	183570

‡ The maximum k_{eff} is equal to the sum of the calculated k_{eff}, two standard deviations, the code bias, and the uncertainty in the code bias.

HOLTEC INTERNATIONAL COPYRIGHTED MATERIAL

Table 6.4.2

HI-STAR 180 SINGLE PACKAGE WITH F-37 BASKET

Configuration	% Internal Moderation	% External Moderation	Max.‡ k_{eff}	1 σ	EALF (eV)
Single Package, Unreflected:					
Configuration 1, 22 GWd/mtU	100%	0%	0.9443	0.0006	0.3821
Configuration 2, 25 GWd/mtU	100%	0%	0.9483	0.0006	0.3781
Configuration 3, 25 GWd/mtU	100%	0%	0.9448	0.0005	0.3773
Configuration 4, 27 GWd/mtU	100%	0%	0.9473	0.0006	0.3758
Configuration 5, 27 GWd/mtU	100%	0%	0.9458	0.0006	0.3761
Configuration 6, 31 GWd/mtU	100%	0%	0.9462	0.0005	0.3743
Configuration 7, 34 GWd/mtU	100%	0%	0.9474	0.0007	0.3727
Configuration 8, 35 GWd/mtU	100%	0%	0.9441	0.0006	0.3692
Configuration 9, 34 GWd/mtU	100%	0%	0.9438	0.0006	0.3739
Configuration 2, 25 GWd/mtU:					
Single Package, fully reflected	100%	100%	0.9487	0.0006	0.3781
Containment, fully reflected	100%	100%	0.9463	0.0005	0.3795
Single Package, Damaged	0%	100%	0.3716	0.0004	237409

‡ The maximum k_{eff} is equal to the sum of the calculated k_{eff}, two standard deviations, the code bias, and the uncertainty in the code bias.

HOLTEC INTERNATIONAL COPYRIGHTED MATERIAL

6.5 EVALUATION OF PACKAGE ARRAYS UNDER NORMAL CONDITIONS OF TRANSPORT

6.5.1 Configuration

Studies in Subsection 6.3.4 show that the spacing and external moderator density have a negligible effect on the reactivity of the package. Therefore, any external condition can be used to represent the most reactive configuration. To represent package arrays under normal conditions, a hexagonal array of touching casks, infinite in lateral and axial direction, internally and externally dry, is modeled. All other modeling assumptions are identical to the modeling assumptions for the single package under normal conditions. The analyses are performed for both baskets. For the F-37, only one of the nine configurations is modeled. Due to the large margins to the regulatory limit, this is sufficient to show regulatory compliance. This addresses the requirement of 10CFR71.59 (a) (1) and the determination of the criticality safety index according to 10CFR71.59 (b).

6.5.2 Results

The results are presented in Table 6.5.1, and show that the maximum k_{eff} is well below the regulatory limit for both baskets. Since an unlimited number of packages can be placed in an array, the value of N is infinite, and the CSI is therefore zero (0).

HOLTEC INTERNATIONAL COPYRIGHTED MATERIAL

Table 6.5.1

HI-STAR 180 PACKAGE ARRAYS UNDER NORMAL CONDITIONS

Configuration	% Internal Moderation	% External Moderation	Max.‡ k_{eff}	1 σ	EALF (eV)
F-32	0%	0%	0.4080	0.0004	127540
F-37, Configuration 2	0%	0%	0.3961	0.0003	168954

‡ The maximum k_{eff} is equal to the sum of the calculated k_{eff}, two standard deviations, the code bias, and the uncertainty in the code bias.

HOLTEC INTERNATIONAL COPYRIGHTED MATERIAL

6.6 PACKAGE ARRAYS UNDER HYPOTHETICAL ACCIDENT CONDITIONS

6.6.1 Configuration

Studies in Subsection 6.3.4 show that the spacing and external moderator density have a negligible effect on the reactivity of the package. Therefore, any external condition can be used to represent the most reactive configuration. To represent package arrays under accident conditions, a hexagonal array of touching casks, infinite in lateral and axial direction, internally dry with full external water reflection, is modeled. This model is consistent with the model for the single cask under accident condition, and recognizes the fact that water intrusion under accident condition is not considered credible. This calculation addresses the requirement of 10CFR71.59 (a)(2)

6.6.2 Results

The results are presented in Table 6.6.1, and show that the maximum k_{eff} is well below the regulatory limit for both baskets. Since an unlimited number of packages can be placed in an array, the value of N is infinite, and the CSI is therefore zero (0).

Table 6.6.1

HI-STAR 180 PACKAGE ARRAYS UNDER ACCIDENT CONDITIONS

Configuration	% Internal Moderation	% External Moderation	Max.‡ k_{eff}	1 σ	EALF (eV)
F-32	0%	100%	0.4025	0.0004	138620
F-37, Configuration 2	0%	100%	0.3891	0.0004	182738

‡ The maximum k_{eff} is equal to the sum of the calculated k_{eff}, two standard deviations, the code bias, and the uncertainty in the code bias.

HOLTEC INTERNATIONAL COPYRIGHTED MATERIAL

6.7 FISSILE MATERIAL PACKAGES FOR AIR TRANSPORT

Not Applicable. The HI-STAR 180 package will not be transported by air.

HOLTEC INTERNATIONAL COPYRIGHTED MATERIAL

6.8 BENCHMARK EVALUATIONS

Benchmark calculations have been made on selected critical experiments, chosen, insofar as possible, to bound the range of variables in the cask designs. The most important parameters are (1) the enrichment, (2) the cell spacing, and (3) the ^{10}B loading of the neutron absorber panels. Other parameters, within the normal range of cask and fuel designs, have a smaller effect, but are also included. No significant trends were evident in the benchmark calculations or the derived bias. Detailed benchmark calculations are presented in Appendix 6.A. These are the same benchmark calculations that were used in Holtec's previously approved storage and transportation FSARs and SAR.

The benchmark calculations were performed with the same computer codes and cross-section data, described in Section 6.3, that were used to calculate the k_{eff} values for the cask. Further, all calculations were performed on the same computer hardware, specifically, personal computers under Microsoft Windows.

Additional benchmark calculations performed for the burnup methodology for the HI-STAR 180 are presented in Appendix 6.B.

HOLTEC INTERNATIONAL COPYRIGHTED MATERIAL

6.9 REFERENCES

The following generic industry and Holtec produced references may have been consulted in the preparation of this document. Where specifically cited, the identifier is listed in the SAR text or table. Active Holtec Calculation Packages which are the repository of all relevant licensing and design basis calculations are annotated as "latest revision". Submittal of the latest revision of such Calculation Packages to the USNRC and other regulatory authorities during the course of regulatory reviews is managed under the company's Configuration Control system.

[6.2.1] Holtec International Report HI-951251, Safety Analysis Report HI-STAR 100 Cask System, USNRC Docket 71-9261, latest revision.

[6.3.1] J.F. Briesmeister, Ed., "MCNP - A General Monte Carlo N-Particle Transport Code, Version 4A," Los Alamos National Laboratory, LA-12625-M (1993).

[6.3.2] "CASMO-4 Methodology", Studsvik/SOA-95/2, Rev. 0, 1995.

[6.3.3] "CASMO-4 A Fuel Assembly Burnup Program, Users Manual," SSP-01/400, Rev. 1, Studsvik Scandpower, Inc., 2001.

[6.3.4] "CASMO-4 Benchmark Against Critical Experiments", Studsvik/SOA-94/13, Studsvik of America, 1995.

[6.3.5] J.M. Cano, R. Caro, and J.M Martinez-Val, "Supercriticality Through Optimum Moderation in Nuclear Fuel Storage," *Nucl. Technol.*, **48**, 251-260, (1980).

[6.4.1] M.G. Natrella, "Experimental Statistics", National Bureau of Standards, Handbook 91, August 1963.

[6.4.2] Holtec International Report HI-2073654, "Criticality Analysis for the HI-STAR 180", latest revision. (Holtec Proprietary)*

* Supporting document submitted with the HI-STAR 180 License Application (Docket 71-9325)

HOLTEC INTERNATIONAL COPYRIGHTED MATERIAL

APPENDIX 6.A:

THIS APPENDIX IS PROPRIETARY IN ITS ENTIRETY

HOLTEC INTERNATIONAL COPYRIGHTED MATERIAL

Appendix 6.B

THIS APPENDIX IS PROPRIETARY IN ITS ENTIRETY

HOLTEC INTERNATIONAL COPYRIGHTED MATERIAL

Appendix 6.C

THIS APPENDIX IS PROPRIETARY IN ITS ENTIRETY

HOLTEC INTERNATIONAL COPYRIGHTED MATERIAL

Appendix 6.D

THIS APPENDIX IS PROPRIETARY IN ITS ENTIRETY

HOLTEC INTERNATIONAL COPYRIGHTED MATERIAL

Appendix 6.E

THIS APPENDIX IS PROPRIETARY IN ITS ENTIRETY

HOLTEC INTERNATIONAL COPYRIGHTED MATERIAL

Appendix 6.F

THIS APPENDIX IS PROPRIETARY IN ITS ENTIRETY

HOLTEC INTERNATIONAL COPYRIGHTED MATERIAL

CHAPTER 7: PACKAGE OPERATIONS

7.0 INTRODUCTION

This chapter provides a summary description of the essential elements and minimum requirements necessary to prepare the package for shipment and to ensure that it operates in a safe and reliable manner under normal and accident conditions of transport pursuant to the provisions of 10CFR71, as described in this SAR. The information presented in this chapter along with the technical basis of the package design described in Chapters 2 through 6 will be used by Holtec International's Site Services organization to develop more detailed generic procedures for users of the HI-STAR 180 Package. Equipment specific operating details such as valve manipulation, onsite cask transporter handling methods etc, will be provided to individual users of the HI-STAR 180 package based on the specific ancillary equipment selected by the user and the configuration of the site. It is the user's responsibility to utilize the information provided in this chapter, (treating it as an inviolable set of operation elements that must be included in the detailed operating procedures). In addition, the user must consult the conditions of the Certificate of Compliance (CoC), equipment-specific operating instructions, and the plant's working procedures and apply them to develop the site-specific written loading, unloading, and handling procedures to ensure that the package is operated in accordance with the CoC and all applicable government regulatory requirements. The following generic criteria shall be used to qualify that the site specific operating procedures are acceptable for use:

- All heavy load handling instructions are in keeping with the guidance in industry standards, and Holtec's proprietary rigging manual.
- A careful technical evaluation of all potential modes of loss of load stability has been performed and accepted by Holtec International's site services organization.
- The procedures are in conformance with this SAR and the NRC issued CoC.
- The operational steps are ALARA
- The procedures contain provisions for documenting successful execution of all safety significant steps for archival reference.
- Holtec's lessons learned database has been consulted to incorporate all applicable lessons learned from prior cask handling and loading evolutions.
- Procedures contain provisions for classroom and hands-on training and for a Holtec approved personnel qualification process to insure that all operations personnel are adequately trained.
- The procedures are sufficiently detailed and articulated to enable craft labor to execute them in *literal compliance* with their content.

The operations described in this chapter assume that the fuel will be loaded into or unloaded from the HI-STAR cask submerged in a spent fuel pool. With some modifications, the information presented herein can be used to develop site-specific procedures for loading or unloading fuel into the system within a hot cell or other remote handling facility.

US Department of Transportation (USDOT) transportation regulations in 49CFR applicable to the transport of the HI-STAR 180 package are only addressed in this chapter to the extent required to ensure compliance with 10CFR71 regulations and to provide a more complete package operation description. Applicable 49CFR regulations, including those explicitly called out in 10CFR 71.5, shall be complied with for package use in the US and/or for US package export and import. For transport outside US territory and under the approval of one or more foreign competent authorities, other requirements such as the ADR, "European Agreement Concerning the International Carriage of Dangerous Goods by Road" and the RID, "European Agreement Concerning the International Carriage of Dangerous Goods by Rail" may be imposed in place of the 49CFR.

Users will be required to develop or modify existing programs and procedures to account for the transport operation of the HI-STAR 180. Written procedures are required and will be developed or modified to account for such items as handling and storage of systems, structures and components identified as *important-to-safety*, heavy load handling, specialized instrument calibration, special nuclear material accountability, fuel handling procedures, training, equipment and process qualifications. Users shall implement controls to ensure that the lifted weights do not exceed the cask lifting trunnion design limit. Users shall implement controls to monitor the time limit for the removal of the cask from the spent fuel pool to the commencement of cask draining to prevent boiling. Users shall also implement controls to ensure that the cask cannot be subjected to a fire event in excess of design limits during loading operations.

Control of the package operation shall be performed in accordance with the user's Quality Assurance (QA) program to ensure critical steps are not overlooked and that the cask has been confirmed to meet all requirements of the Part 71 CoC before being released for shipment.

Table 7.1.1 provides the HI-STAR 180 Package bolt torque and sequencing requirements. Fuel assembly selection and verification shall be performed by the user in accordance with written, approved procedures that ensure that only SNF assemblies authorized in the CoC are loaded into the HI-STAR 180 cask. Fuel handling shall be performed in accordance with written site-specific procedures.

ALARA notes and warnings are included to alert users to radiological issues. Actions identified with these notes and warnings are not mandatory and shall be implemented based on a determination by radiation protection.

Appendix A of this chapter (Appendix 7.A) provides figures of the HI-STAR 180 Package during its various loading states during typical operations/evolutions.

HOLTEC INTERNATIONAL COPYRIGHTED MATERIAL

7.1 PACKAGE LOADING

The HI-STAR 180 Package is used to load and transport spent fuel. The essential elements required to prepare the HI-STAR 180 Package for fuel loading, to load the fuel, to ready the cask for transport and to ship the HI-STAR 180 Package as a Transport Package are described below.

7.1.1 Preparation for Loading

1. If the HI-STAR 180 Packaging has previously been used to transport spent fuel, the HI-STAR 180 is received and the personnel barrier, if attached, is removed and security seals, if used, are inspected to verify there was no tampering and that they match the corresponding shipping documents.
2. The HI-STAR 180 Packaging is visually receipt inspected to verify that there are no outward visual indications of impaired physical conditions except for superficial marks and dents. Any issues are identified to site management. Any road dirt is washed off and any foreign material is removed.
3. Radiological surveys are performed in accordance with 49CFR173.443 [7.1.2] and 10CFR20.1906 [7.1.3]. If necessary, the HI-STAR 180 Packaging is decontaminated to meet surveillance requirements and/or notifications are made to affected parties.
4. The impact limiters, if attached, are removed and a second visual inspection to verify that there are no outward visual indications of impaired physical condition is performed.
5. The trunnion hole plugs, if installed, are removed and the cask trunnions are installed. The cask is upended and the neutron shield relief devices are inspected to confirm that they are installed, intact, and not covered by tape or any other covering.
6. The cask lids are removed and used seals are removed.
7. The containment closure flange [PROPRIETARY TEXT REMOVED] lid seal surfaces are inspected for damage that may compromise the performance of the seal. Any damage to the seal surfaces are repaired by welding and/or polishing/machining damaged areas as necessary. If the seal surface is weld repaired, the seal surfaces are faced with corrosion resistant veneers.
8. The [PROPRIETARY TEXT REMOVED]closure lid bolts are inspected for distortion and damaged threads and any suspect bolts are replaced.
9. Any foreign material is removed from inside the cask and the basket panels are visually checked to verify they are not damaged.

7.1.2 Loading of Contents

7.1.2.1 Fuel Loading Operations

ALARA Note:
A bottom protective cover may be attached to the cask bottom or placed in the designated preparation area or spent fuel pool. This will help prevent embedding contaminated particles in the cask bottom surface and ease the decontamination effort. Waterproof tape placed over empty bolt holes, and bolt plugs may also reduce the time required for decontamination. Wetting the components that enter the spent fuel pool may reduce the amount of decontamination work to be performed later.

1. The cask containment closure flange seal surfaces are covered with a protective cover. [PROPRIETARY TEXT REMOVED]The cask storage cavity is filled with either spent fuel pool water or clean borated water and the cask is lowered into the spent fuel pool for fuel loading. (In what follows, cask cavity and fuel pool are used synonymously.)

2. Prior to loading the fuel, the user identifies the fuel to be loaded and the fuel is independently verified that it meets the conditions of the CoC. The pre-selected assemblies are loaded into the cask and a visual verification of the assembly identification is performed.

3. While still underwater, the containment closure flange [PROPRIETARY TEXT REMOVED]lid sealing surface protective cover is removed and the sealing surfaces for the [PROPRIETARY TEXT REMOVED]closure lid are inspected for signs of damage to determine if the seal surface is clear of potential solid contamination and free from gross damage that might affect the seal performance. Any damage that would prevent a seal is remedied, any old seals are removed and the [PROPRIETARY TEXT REMOVED]closure lid is installed using new seals. The lid is visually inspected to confirm it is properly seated. The user performs a site-specific Time-to-Boil evaluation to determine a time limitation to ensure that water boiling will not occur in the cask prior to the start of draining operations. Bounding time limits for design basis fuel are shown in Table 3.3.5 using the methodology in Section 3.3.3. Users may use these bounding limits or calculate their own time limits using the methodology of Section 3.3.3. If it appears that the Time-to-Boil limit will be exceeded prior to draining operations, the user shall take appropriate action to replace the water in the cask cavity with an inert gas or to circulate water through the cask cavity to reset the Time-to-Boil clock. The [PROPRIETARY TEXT REMOVED]closure lid bolts are installed at any time after the [PROPRIETARY TEXT REMOVED]closure lid is installed but before the cask is dried.

ALARA Note:
Activated debris may have settled on flat surfaces of the cask during fuel loading. Cask surfaces suspected of carrying activated debris should be kept under water until a

preliminary dose rate scan clears the cask for removal. To reduce decontamination time, the cask surfaces should be kept wet until decontamination begins.

4. The lift attachment is engaged to the cask lifting trunnions and the cask is raised out of the spent fuel pool. As the cask is raised out of the spent fuel pool, the lift attachment and cask are sprayed with clean water to help remove contamination.

5. The bottom of the cask is decontaminated, the cask is placed in the designated preparation area and the lift attachment is removed. The top surfaces of the cask are decontaminated.

6. The lid vent line is opened to prevent cask pressurization. The [PROPRIETARY TEXT REMOVED] closure lid bolts are torqued after the vent line is opened and before the cask cavity is drained. Bolt torque values and patterns are provided in Table 7.1.1.

7. Temporary shielding (if used) is installed.

8. Dose rates are measured at the [PROPRIETARY TEXT REMOVED] closure lid and around the cask body to confirm appropriate radiological control.

ALARA Warning:
Personnel should remain clear of the drain lines any time water is being pumped or purged from the cask. Radiological crud, suspended in the water, may create a radiation hazard to workers. Dose rates will rise as water is drained from the cask. Continuous dose rate monitoring is recommended.
Caution:
An inert gas must be used any time the fuel is not covered with water to prevent oxidation of the fuel cladding. The fuel cladding is not to be exposed to air at any time during loading operations.

9. For moderate or high burnup fuel, the Forced Helium Dehydration (FHD) System is connected to the cask and used to remove moisture from the cask cavity. There is no time limit on FHD drying. As the water is drained from the cask, an inert gas is introduced into the cask to prevent oxidation of the fuel cladding. After the bulk water has been removed, the helium exiting the FHD demoisturizer is cooled to a temperature or dew point of less than or equal to -5.0 °C (22.9 °F) and circulated through the cask for greater than or equal to 30 minutes to ensure that the cask cavity is suitably dry.

10. Optionally, for moderate burnup fuel only, a vacuum drying system is connected to the cask and used to remove moisture from the cask cavity. There is no time limit on vacuum drying for moderate burnup fuel. As the water is drained from the cask, an inert gas is introduced into the cask to prevent oxidation of the fuel cladding. The cask cavity

shall be evacuated to a pressure of less than or equal to 0.4kPa (3 torr) absolute and held for at least 30 minutes. When the canister has demonstrated that the internal pressure remains less than or equal to 0.4kPa (3 torr) for greater than or equal to 30 minutes, with the valve closed, it shall be considered dry.

11. The cask cavity is backfilled with 99.99% purity helium to the requirements in Table 1.2.1 and the port caps/plugs are closed.

12. The sealing surfaces and mating surfaces of the [PROPRIETARY TEXT REMOVED]closure lid port covers are inspected for signs of damage. Any damage that would prevent a seal is remedied and any old seals are removed. The space beneath the port covers are filled with helium. The port cover bolts are torqued in accordance with Table 7.1.1. The outer seals of the two port covers and the outer seal of the [PROPRIETARY TEXT REMOVED] closure lid are helium leak tested to demonstrate the seals meet the required acceptance criteria in Chapter 8. Unacceptable leakage rates will require cleaning or repair of the seal surfaces and/or replacement of the seals prior to retesting of the seals.

13. The sealing surfaces mating sealing surfaces of the [PROPRIETARY TEXT REMOVED] closure lid inter-seal test port plug and [PROPRIETARY TEXT REMOVED]closure lid port cover test port plugs are inspected for signs of damage. Any damage that would prevent a seal is remedied and any old seals are removed. The inter-seal space for the [PROPRIETARY TEXT REMOVED]closure lid and port covers are filled with helium. The test port plugs are installed in the inter-seal test ports of the [PROPRIETARY TEXT REMOVED]closure lid and port covers using new seals. The test port plugs are torqued in accordance with Table 7.1.1 and are then helium leak tested to demonstrate the seals meet the required acceptance criteria in Chapter 8. Unacceptable leakage rates will require cleaning or repair of the seal surfaces and/or replacement of the seals prior to retesting of the seals.

7.1.2.2 Cask Closure

1. The containment closure flange [PROPRIETARY TEXT REMOVED]seal surface protective cover is removed. The sealing surfaces for the [PROPRIETARY TEXT REMOVED]closure lid are inspected for signs of damage to determine if the seal surface is clear of potential solid contamination and free from gross damage that might affect the seal performance. Any damage that would prevent a seal is remedied, any old seals are removed and the [PROPRIETARY TEXT REMOVED]closure lid is installed using new seals. The [PROPRIETARY TEXT REMOVED]closure lid bolts are installed and torqued in accordance with Table 7.1.1. If desired, security seals are attached to the [PROPRIETARY TEXT REMOVED]closure lid bolts.

2. The [PROPRIETARY TEXT REMOVED]space is dried, evacuated and backfilled with 99.99% purity helium to the requirements in Table 1.2.2.

3. The [PROPRIETARY TEXT REMOVED]closure lid access port plug is fitted with a new seal and closed.

4. The [PROPRIETARY TEXT REMOVED]closure lid inner-seal and access port plug seal are helium leak tested to the required acceptance criteria in Chapter 8. Unacceptable leakage rates will require cleaning and/or repair and retesting of the seals.

5. The [PROPRIETARY TEXT REMOVED]closure lid access port cover and [PROPRIETARY TEXT REMOVED] closure lid inter-seal test port plug are installed with new seals and torqued in accordance with Table 7.1.1.

7.1.3 Preparation for Transport

1. The cask neutron shield pressure relief devices are visually verified to be undamaged.

2. The cask is moved to the transport location, downended, and placed on the transport vehicle.

ALARA Warning:
Dose rates around the unshielded bottom end of the cask may be higher that other locations around the cask. After the cask is downended on the transport frame, the bottom impact limiter should be installed promptly. Personnel should remain clear and exercise other appropriate ALARA controls when working around the bottom end of the cask.

3. A visual inspection for signs of impaired condition is performed. Any non-satisfactory conditions are remedied.

4. Contamination surveys are performed per 49CFR173.443. If necessary, the cask is further decontaminated to meet the surveillance requirements.

5. The cask trunnions are removed and the trunnion hole plugs are installed. The impact limiters are installed on the cask and the bolts/nuts are torqued in accordance with Table 7.1.1.

6. The tie-down system is installed, a cover is installed over at least one of the access tubes on the top impact limiter, and a security seal is installed on the top impact limiter. Security seal serial number(s) are recorded in the shipping documents.

7. Final radiation surveys of the package surfaces per 10CFR71.47 [7.1.4] and 49CFR173.443 [7.1.2] are performed and if necessary, the HI-STAR 180 Packaging is further decontaminated to meet the surveillance requirements. Surveillance results are recorded in the shipping documents.

HOLTEC INTERNATIONAL COPYRIGHTED MATERIAL

8. The surface temperature of the accessible areas of the package are measured.

9. The personnel barrier is installed. The personnel barrier is optional if the package surface temperature and the dose rates without the personnel barrier are within 10CFR71.43 and 10CFR71.47 [7.1.4] requirements, respectively; and no applicable 49CFR requirements are violated.

10. The assembled package is given a final inspection to verify that the following conditions for transport have been met (inspection steps may be performed in any order):

    a. Verify that required radiation survey results are properly documented on the shipping documentation.

    b. Perform a cask surface temperature check. The accessible surfaces of the Transport Package (impact limiters and personnel barrier) shall not exceed the exclusive use temperature limits of 49CFR173.442 [7.1.2].

    c. Verify that all required leakage testing has been performed, the acceptance criteria have been met, and the results have been documented on the shipping documentation.

    d. Verify that the receiver has been notified of the impending shipment and that the receiver has the appropriate procedures and equipment available to safely receive and handle the Transport Package (10CFR20.1906(e)) [7.1.3].

    e. Verify that the carrier has the written instructions and a list of appropriate contacts for notification of accidents or delays.

    f. Verify that the carrier has written instructions that the shipment is to be Exclusive Use in accordance with 49CFR173.441 [7.1.2].

    g. Verify that route approvals and notification to appropriate agencies have been completed.

    h. Verify that the appropriate labels have been applied in accordance with 49CFR172.403 [7.1.1].

    i. Verify that the appropriate placards have been applied in accordance with 49CFR172.500 [7.1.1].

    j. Verify that all required information is recorded on the shipping documentation.

Following the above checks, the Transport Package is released for transport.

Table 7.1.1

HI-STAR 180 Package Torque Requirements

Fastener (See Note 1)	**Recommended Torque (ft-lb), τ** (See Note 2)	**Comments**
[PROPRIETARY TEXT REMOVED]Closure Lid Bolts	1st Pass: Wrench Tight Intermediate Pass: 30% to 45% of τ Final Pass: 2600 (See Note 3)	See Figure 7.1.1 and Notes 4 and 5. Intermediate pass is final pass for empty but previously used packages
[PROPRIETARY TEXT REMOVED]Closure Lid Bolts	1st Pass: Wrench Tight Intermediate Pass: 30% to 45% of τ Final Pass: 1900 (See Note 3)	See Figure 7.1.1 and Notes 4 and 5. Intermediate pass is final pass for empty but previously used packages
[PROPRIETARY TEXT REMOVED]Closure Lid Port Cover Bolts	See Note 6	None
[PROPRIETARY TEXT REMOVED]Closure Lid Access Port Plug	See Note 6	None
Test Port Plugs	See Note 6	None
Top Impact Limiter Attachment Bolts/Nuts	"Snug Tight"	None
Bottom Impact Limiter Attachment Bolts/Nuts	"Snug Tight"	None

Notes:

1. Fasteners shall be cleaned and inspected for damage or excessive wear (replaced if necessary) and coated with a light layer of Fel-Pro Chemical Products, N-5000, Nuclear Grade Lubricant (or equivalent). Fastener sizes are provided in the drawing package in Section 1.3.

2. For conversion from foot pounds (ft-lb) to Newton-meter (N-m) multiply by 1.356.

[PROPRIETARY TEXT REMOVED]

HOLTEC INTERNATIONAL COPYRIGHTED MATERIAL

Table 7.1.1

HI-STAR 180 Package Torque Requirements (continued)

4. Detorquing shall be performed by turning the bolts counter-clockwise in 1/3 turn +/- 30 degrees increments per pass for three passes. The bolts may then be removed.

5. Torque values listed are for the minimum number of passes permitted. Additional intermediate passes are permitted.

6 "Snug tight" plus 1/4 rotation of the fastener.

HOLTEC INTERNATIONAL COPYRIGHTED MATERIAL

PROPRIETARY INFORMATION REMOVED

Note: Closure lid bolts are to be tightened uniformly. Due to the large diameter of the closure lids and other factors, the standard star pattern with added flexibility is permitted. The tightening sequence in this example pattern shows that after bolts 1 thru 4 are tightened, the remaining bolts may be tightened in groups of up to three (e.g. bolts 5, 6 and 7) before moving to diametrically opposed bolts (e.g. 8, 9 and 10). Tools designed to torque more than one bolt at a time (e.g. bolts 1 and 2 simultaneously) may be implemented and are recommended as good ALARA practice. Alternate patterns shall be approved by Holtec.

FIGURE 7.1.1

EXAMPLE BOLT TORQUE PATTERN [PROPRIETARY TEXT REMOVED]

7.2 PACKAGE UNLOADING

In the event that the HI-STAR 180 Package needs to be unloaded, the essential elements required to prepare the package for fuel unloading, to cool the stored fuel assemblies in the cask, to flood the internal cavity, to remove the lid [PROPRIETARY TEXT REMOVED] bolts, to unload the spent fuel assemblies, and to recover the cask are described below.

7.2.1 Receipt of Package from Carrier

1. The HI-STAR 180 Package is received from the carrier and inspected to verify that there are no outward visual indications of impaired physical conditions except for superficial marks and dents. Any issues are identified to site management.

2. The personnel barrier is removed and the security seal installed on the top impact limiter is inspected to verify there was no tampering and that it matches the corresponding shipping documents.

3. Radiological surveys are performed in accordance with 49CFR173.443 [7.1.2] and 10CFR20.1906 [7.1.3]. If necessary, the HI-STAR 180 Packaging is decontaminated to meet surveillance requirements and/or notifications are made to affected parties.

ALARA Warning:
Dose rates around the unshielded bottom end of the HI-STAR 180 cask may be higher that other locations around the cask. After the impact limiter is removed, the cask should be upended promptly. Personnel should remain clear of the bottom of the unshielded cask and exercise other appropriate ALARA controls.

4. The impact limiters are removed.

5. The cask is visually inspected to verify there are no outward visual indications of impaired physical conditions and a radiation survey and a removable contamination survey are performed to establish appropriate radiological controls. Any issues are identified to site management.

6. The trunnion hole plugs are removed and the cask trunnions are installed. The cask is upended and returned to the fuel building or other unloading area.

7. The cask is placed in the designated preparation area.

7.2.2 Removal of Contents

1. The [PROPRIETARY TEXT REMOVED] lid access port cover is removed and a gas sample is drawn from the [PROPRIETARY TEXT REMOVED]space to determine radiological conditions.

HOLTEC INTERNATIONAL COPYRIGHTED MATERIAL

2. The [PROPRIETARY TEXT REMOVED]space gas is handled in accordance with Radiation Protection directions and the [PROPRIETARY TEXT REMOVED]closure lid is removed.

3. The [PROPRIETARY TEXT REMOVED]closure lid port covers are removed to access the vent and drain ports.

ALARA Warning:
Gas sampling is performed to assess the condition of the fuel cladding. If a leak is discovered in the fuel cladding, the user's Radiation Control organization may require special actions to vent the cask cavity.

4. A temporary attachment is connected to the vent port to open the vent port tube cap/plug and a gas sample from inside the cask cavity is collected. A gas sample analysis is performed to assess the condition of the fuel assembly cladding. As necessary during preparation for lid removal, the gas inside the cask cavity is handled/vented to an approved location. Depending on cask cavity pressure, the cavity may require additional backfill or venting to equalize its pressure to atmospheric.

5. If the cask is to be unloaded under water, the cask is cooled if necessary to reduce the internal temperature to allow water flooding without thermally shocking the fuel assemblies or over-pressurizing the cask from the formation of steam. The cask is then filled with water at a controlled rate with the effluent directed to the spent fuel pool or other approved discharge point.

6. The [PROPRIETARY TEXT REMOVED]closure lid bolts may be removed at any time from after the internal cavity pressure is equalized until the time the [PROPRIETARY TEXT REMOVED] closure lid is to be removed. In addition, the [PROPRIETARY TEXT REMOVED] closure lid bolts are removed either before the cask is placed in the spent fuel pool or other fuel unloading area or after placement of the cask in one of these areas.

ALARA Note:
Wetting the components that enter the spent fuel pool may reduce the amount of decontamination work to be performed later.

7. The lift attachment is engaged to the lifting trunnions and the cask is placed in the spent fuel pool or other appropriate unloading area. The [PROPRIETARY TEXT REMOVED] closure lid is removed.

8. All fuel assemblies are returned to the spent fuel storage racks and the cask fuel cells are vacuumed to remove any assembly debris and crud.

9. The fuel cells are inspected for any remaining items to be removed as appropriate.

HOLTEC INTERNATIONAL COPYRIGHTED MATERIAL

ALARA Warning:
Activated debris may have settled on flat surfaces of the cask during fuel unloading. Surfaces suspected of carrying activated debris should be kept under water until a preliminary dose rate scan clears the cask for removal. To reduce contamination of the cask, the surfaces of the cask and lift yoke should be kept wet until decontamination can begin.

10. The cask is returned to the designated preparation area and any water is pumped back into the spent fuel pool, liquid radwaste system or other approved location as necessary.

11. The cask is decontaminated as directed by site Radiation Protection personnel. Outer surfaces of the cask are decontaminated to remove surface contamination to the level necessary to allow for proper cask transport, loading, or storage as applicable.

HOLTEC INTERNATIONAL COPYRIGHTED MATERIAL

7.3 PREPARATION OF EMPTY PACKAGE FOR TRANSPORT

7.3.1 Overview of Empty Package Transport

The essential elements and minimum requirements for preparing an empty package (previously used) for transport are similar to those required for transporting the loaded package with some differences. A survey for removable contamination is performed to verify that the removable contamination on the internal and external surfaces of the cask is ALARA and that the limits of 49CFR173.428 [7.1.2] and 10CFR71.87(i) [7.1.4] are met. At the user's discretion, impact limiters and/or personnel barrier are installed. The procedures provided herein describe the installation of the impact limiters and personnel barrier. These steps may be omitted, as appropriate.

7.3.2 Preparation for Empty Package Shipment

1. The containment closure flange [PROPRIETARY TEXT REMOVED]closure lid seal surface protector is removed from the cask, if necessary.

2. The cask is surveyed for contamination and verified to be empty and contain less than 15 gm U-235 in accordance with 49CFR173.421(a)(5) [7.1.2].

3. The [PROPRIETARY TEXT REMOVED]closure lid is installed and the bolts are torqued. See Table 7.1.1 for torque requirements.

4. The [PROPRIETARY TEXT REMOVED]closure lid port covers are installed if necessary.

5. The containment flange [PROPRIETARY TEXT REMOVED]closure lid seal surface protector is removed, if necessary, the [PROPRIETARY TEXT REMOVED]closure lid is installed, and the bolts are torqued. See Table 7.1.1 for torque requirements. If desired, a security seal may be attached to the [PROPRIETARY TEXT REMOVED] closure lid bolts.

6. The [PROPRIETARY TEXT REMOVED]closure lid access port plug and access port cover are installed if necessary.

7. The cask is downended and positioned on the transport equipment.

8. A final inspection of the cask is performed and includes the following:

   - A final survey for removable contamination on the accessible external surfaces of the cask in accordance with 49CFR173.443(a) [7.1.2]. If necessary, the cask is decontaminated to meet the surveillance requirements.

   - A radiation survey of the cask to confirm that the radiation levels on any external surface of the cask do not exceed the levels required by 49CFR173.421(a)(2) [7.1.2]. Any issues are identified to site management and the cask is decontaminated as directed by site radiation protection.

HOLTEC INTERNATIONAL COPYRIGHTED MATERIAL

- A visual inspection of the cask to verify that there are no outward visual indications of impaired physical condition except for superficial marks and dents and that the empty package is securely closed in accordance with 49CFR173.428(b) [7.1.2].

- Verification that the cask neutron shield pressure relief devices are installed, are intact and are not covered by tape or other covering.

9. If desired, the cask trunnions are removed, the trunnion hole plugs are installed, the impact limiters are installed and the impact limiter bolts/nuts are torqued. (See Table 7.1.1 for torque requirements.)

10. If desired, a security seal is installed on the top impact limiter.

11. Final radiation surveys of the empty package surfaces are performed per 10CFR71.47 [7.1.4], and 49CFR173.428(a) [7.1.2].

12. If desired, the personnel barrier and personnel barrier locks are installed and the personnel barrier keys are transferred to the carrier.

13. A final check to ensure that the empty package is ready for release is performed and includes the following checks:

    - Verification that the receiver has been notified of the impending shipment.

    - Verification that any labels previously applied in conformance with Subpart E of 49CFR172 [7.1.1] have been removed, obliterated, or covered and the "Empty" label prescribed in 49CFR172.450 [7.1.1] is affixed to the packaging in accordance with 49CFR173.428(d) [7.1.2].

    - Verification that the empty package for shipment is prepared in accordance with 49CFR173.422 [7.1.2]

    - Verification that all required information is recorded on the shipping documentation.

14. The empty package is then released for transport.

HOLTEC INTERNATIONAL COPYRIGHTED MATERIAL

7.4 OTHER OPERATIONS

There are no other operations for the HI-STAR 180 Package with regard to provisions for any special operational controls (e.g., route, weather, shipping time restrictions, etc.). All required operations and controls are detailed in Chapter 7 of this SAR.

HOLTEC INTERNATIONAL COPYRIGHTED MATERIAL

7.5 REFERENCES

The following generic industry and Holtec produced references may have been consulted in the preparation of this document. Where specifically cited, the identifier is listed in the SAR text or table. Active Holtec Calculation Packages which are the repository of all relevant licensing and design basis calculations are annotated as "latest revision". Submittal of the latest revision of such Calculation Packages to the USNRC and other regulatory authorities during the course of regulatory reviews is managed under the company's Configuration Control system.

[7.1.1] *U.S. Code of Federal Regulations,* Title 49 "Transportation", Part 172 "Hazardous Materials Table, Special Provisions, Hazardous Materials Communications, Emergency Response Information, and Training Requirements."

[7.1.2] *U.S. Code of Federal Regulations,* Title 49 "Transportation", Part 173, "Shippers – General Requirements for Shipments and Packages,"

[7.1.3] *U.S. Code of Federal Regulations,* Title 10, "Energy", Part 20 "Standards for Protection against Radiation".

[7.1.4] *U.S. Code of Federal Regulations,* Title 10, "Energy", Part 71 "Packaging and Transportation of Radioactive Material".

HOLTEC INTERNATIONAL COPYRIGHTED MATERIAL

APPENDIX 7.A:

THIS APPENDIX IS PROPRIETARY IN ITS ENTIRETY

HOLTEC INTERNATIONAL COPYRIGHTED MATERIAL

CHAPTER 8: ACCEPTANCE TESTS AND MAINTENANCE PROGRAM

8.0 INTRODUCTION

This chapter identifies the acceptance tests and maintenance program to be conducted on the HI-STAR 180 Package to verify that the structures, systems and components (SSCs) classified as *important-to-safety* have been fabricated, assembled, inspected, tested, accepted, and maintained in accordance with the requirements set forth in this Safety Analysis Report (SAR), all applicable regulatory requirements, and the Certificate of Compliance (CoC). The acceptance criteria and maintenance program described in this chapter is in full compliance with the requirements of 10CFR Part 71 Subpart G [8.0.1].

HOLTEC INTERNATIONAL COPYRIGHTED MATERIAL

8.1 ACCEPTANCE TESTS

In this section the inspections and acceptance tests to be performed on the HI-STAR 180 Package prior to its use are summarized. These inspections and tests provide assurance that the HI-STAR 180 Package has been fabricated, assembled and accepted for use and loading under the conditions specified in this SAR and the USNRC issued CoC in accordance with the requirements of 10CFR Part 71.

8.1.1 Visual Inspections and Measurements

The HI-STAR 180 Package shall be assembled in accordance with the licensing drawing package in Section 1.3 (drawings referenced in the CoC). The drawings provide dimensional tolerances and gap requirements that define the limits on the dimensions used in licensing basis analysis. Fabrication drawings provide additional dimensional tolerances necessary to ensure fit-up of parts. Visual inspections and measurements shall be made and controls shall be exercised to ensure that the packaging conforms to the dimensions and tolerances specified on the licensing and fabrication drawings. These dimensions are subject to independent confirmation and documentation in accordance with the Holtec QA program approved in NRC Docket No. 71-0784.

The following shall be verified as part of visual inspections and measurements:

- Visual inspections and measurements shall be made to ensure that the packaging effectiveness is not significantly reduced. Any *important-to-safety* component found to be under the specified minimum thickness shall be repaired or replaced as required.
- Visual inspections shall be made to verify that neutron absorber panels, basket shims and anti-rotation bars are present as required by cask and basket design.
- [PROPRIETARY TEXT REMOVED]The packaging shall be visually inspected to ensure it is conspicuously and durably marked with the proper markings/labels in accordance with 10CFR71.85(c).
- The packaging shall be inspected for cleanliness and preparation for shipping in accordance with written and approved procedures.

The visual inspection and measurement results for the HI-STAR 180 Package shall become part of the final quality documentation package.

8.1.2 Weld Examination

The examination of HI-STAR 180 Package welds shall be performed in accordance with the drawing package in Section 1.3 and applicable codes and standards in Table 2.1.13, including alternatives as specified in Table 2.1.14. Weld examinations and repairs shall be performed as specified below. All weld inspections shall be performed in accordance with written and approved procedures by personnel qualified in accordance with SNT-TC-1A [8.1.2]. All required inspections, examinations, and tests shall become part of the final quality documentation package.

HOLTEC INTERNATIONAL COPYRIGHTED MATERIAL

The following specific weld requirements shall be followed in order to verify fabrication in accordance with the drawings.

1. Containment boundary welds including any attachment welds (and temporary welds to the containment boundary) shall be examined in accordance with ASME Code Section V, Article 9 with acceptance criteria per ASME Code Section III, Subsection NB, Article NB-5300. Examinations, Visual (VT), Radiographic (RT), and Liquid Penetrant (PT) or Magnetic Particle (MT), apply to these welds as defined by the code. These welds shall be repaired in accordance with the requirements of the ASME Code Section III, Article NB-4450 and examined after repair in the same manner as the original weld. Weld overlays for cask sealing surfaces shall be VT and PT examined to insure that a leakage path between the containment space and the outside environment that may violate the specified cask leak tightness criterion is detected and eliminated.

2. Structural welds in the cask and impact limiter (excluding those listed above) shall be examined in accordance with ASME Code Section V, Article 9 with acceptance criteria per ASME Code Section III, Subsection NF, Article NF-5300. These welds shall be repaired in accordance with ASME Code Section III, Article NF-4450 and examined after repair in the same manner as the original weld. These weld requirements are not applicable to non-code welds (e.g. seal welds) on the cask and impact limiters.

3. Basket welds shall be VT examined and repaired in accordance with written and approved procedures developed specifically for welding Metamic-HT and in accordance with ASME Section IX, or AWS D1.2/D1.2M. These weld requirements are not applicable to non-code welds on the basket.

4. Non-code welds shall be examined and repaired in accordance with written and approved procedures

8.1.3 Structural and Pressure Tests

The cask containment boundary will be tested by combination of methods (including helium leak test, pressure test, MT, and/or PT, as specified in this Chapter) to verify that it is free of cracks, pinholes, uncontrolled voids or other defects that could significantly reduce the effectiveness of the packaging.

8.1.3.1 Lifting Trunnions

Two top trunnions are provided for vertical lifting and handling of the loaded cask. The top trunnions are required to be designed, tested and inspected in accordance with ANSI N14.6 [8.1.3]. Two bottom trunnions are provided for rotation of the loaded cask and may be used for horizontal cask lifting and handling. If the bottom trunnions are to be used for lifting and handling of the loaded cask they must be designed, tested and inspected in accordance with ANSI N14.6. Otherwise, the bottom trunnions may be designed, tested and inspected in

accordance to commercial specifications and requirements acceptable for similar nuclear applications and as clarified further below. Chapter 2, Subsection 2.1.1 and the drawing package in Section 1.3 contain detailed information on the design basis and computed margin-of-safety in the trunnions.

The top lifting trunnions shall be tested in accordance with ANSI N14.6 at 300% of the maximum design (service) lifting load. The test load shall be applied for a minimum of 10 minutes. The accessible parts of the top trunnions (areas outside the cask), and the local cask areas shall then be visually examined to verify no deformation, distortion, or cracking has occurred. Any evidence of deformation (other than minor localized surface deformation due to contact pressure between lifting device and top trunnion), distortion or cracking of the trunnion or adjacent cask areas shall require replacement of the trunnion and/or repair of the cask. Following any replacements and/or major repair, as defined in ANSI N14.6, the load testing shall be re-performed and the components re-examined in accordance with the original procedure and acceptance criteria. Testing shall be performed in accordance with written and approved procedures. Certified material test reports verifying trunnion material mechanical properties meet ASME Code Section II requirements provide further verification of the trunnion load capabilities. Test results shall be documented and shall become part of the final quality documentation package.

The requirements for ANSI N14.6 regarding the design, testing and inspection in the preceding paragraph for the top trunnions also apply to the bottom trunnions if they are to be used for horizontal lifting. The maximum rated load of the bottom trunnions shall be greater than or equal to one half the rated load of the top trunnions times a factor of 1.15. The 1.15 multiplier ensures a trunnion rating that conservatively accounts for offset in the cask center of gravity (C.G.). Even if the bottom trunnions are not used for lifting of the cask, they must be load tested to 200% the rated load for a minimum of 10 minutes and inspected in the same manner described in the foregoing.

8.1.3.2 Pressure Testing

Pressure testing of the HI-STAR 180 containment boundary is not required [PROPRIETARY TEXT REMOVED] .

[PROPRIETARY TEXT REMOVED]

8.1.4 Leakage Tests

Leakage rate tests on the cask containment system shall be performed per written and approved procedures. Tables 8.1.1 and 8.1.2 provide the allowable leakage rate and test sensitivity in terms of helium leaktightness.

In case of an unsatisfactory leakage rate, weld repair, seal surface repair/polishing and/or seal change and retest shall be performed until the test acceptance criterion is satisfied.

Leakage rate test results shall become part of the final quality documentation package.

8.1.5 Component and Material Tests

Cask closure seals are [PROPRIETARY TEXT REMOVED] conservatively specified in subparagraph 2.2.1.1.6 to provide a high degree of assurance of leak tightness under normal and accident conditions of transport. Seal tests under the most severe package service conditions including performance at pressure under high and low temperatures will not challenge the capabilities of these seals and thus are not required.

No other package components require individual testing. The following subsections present the required packaging material tests.

8.1.5.1 Impact Testing

Certain cask materials are ferritic steels. ASME Code Section III and Regulatory Guides 7.11 [8.1.4] and 7.12 [8.1.5] require that certain materials be tested in order to assure that these materials are not subject to brittle fracture failures.

Each bar, plate or forging for the cask containment system shall be required to be drop weight tested in accordance with the requirements of Regulatory Guides 7.11 and 7.12 as specified in Table 2.1.10. Additionally, per the ASME Code Section III, Subsection NB, Article NB-2330, Charpy V-notch testing shall be performed on these materials as specified in Table 2.1.10. Weld material used in welding the containment system shall be Charpy V-notch tested in accordance with ASME Section III, Subsection NB, Articles NB-2330 and NB-2430 with code alternatives listed in Table 2.1.14.

The monolithic shield cylinder, the bottom ring forging, and the bottom steel cover plate shielding steels (also referred to as Dose Blocker Parts) shall be Charpy V-notch testing per the ASME Code Section III, Subsection NF, Article NF-2300.

Tables 2.1.10 and 2.1.10A provide the test temperatures or Nil Ductility Transition Temperature (T_{NDT}), and test requirements to be used when performing the testing specified above.

Test results shall become part of the final quality documentation package.

8.1.5.2 Impact Limiter Crush Material Testing

Verification of the transport impact limiter crush material crush strength is accomplished by performance of a crush test of sample blocks. The verification tests are performed by the crush material supplier or third party testing facility in accordance with Holtec approved procedures. Impact limiter material crush strength is specified in Table 2.2.10.

The certified test results shall be retained by Holtec International as archive record for each batch of impact limiter crush material manufactured and used. Test results shall be documented and shall become part of the final quality documentation package.

8.1.5.3 Neutron Shielding Material

Properties of Holtite-B neutron shielding material are provided in Chapter 1. Each manufactured lot of Holtite-B neutron shield material shall be tested to verify that the material composition (aluminum and hydrogen), boron concentration, hydrogen density, and bulk Holtite material density meet the requirements specified in Subsection 1.2.1.5. A manufactured lot is defined as the total amount of material used to make any number of mixed batches comprised of constituent ingredients from the same lot/batch identification numbers supplied by the constituent manufacturer. Testing shall be performed in accordance with written and approved procedures.

Neutron shield test results for each manufactured lot of neutron shield material shall become part of the final quality documentation package.

The installation of the neutron shielding material shall be performed in accordance with written, approved and qualified procedures. The procedures shall ensure that mix ratios and mixing methods are controlled in order to achieve proper material composition, boron concentration and distribution, and that pours are controlled in order to prevent gaps or voids from occurring in the material. Holtec International shall maintain samples of each manufactured lot of neutron shielding material.

8.1.5.4 Neutron Absorber Material

Essential characteristics of Metamic-HT are described in Section 1.2 of this SAR. As described in Section 1.2, Metamic-HT is made from pure aluminum using a powder metallurgy process that results in pinning of the materials grain boundaries by dispersoids of nanoparicles of aluminum oxide. The manufacturing of Metamic-HT is governed by a set of quality validated shop procedures contained in a Manufacturing Manual [1.2.25].

The key constituents of Metamic-HT, namely aluminum powder and Boron Carbide powder are procured under their respective purchasing specifications that define the required particle size distributions and set down the prohibited materials & impurities, as well as tolerable level of trace amounts of acceptable impurities.

A summary description of the manufacturing processes for Metamic-HT is presented in Paragraph 1.2.1.6 in this SAR.

As required by the procedures set down in its manufacturing manual [1.2.25], each panel of Metamic-HT neutron absorber material shall be visually inspected for damage such as scratches, cracks, burrs, presence of imbedded foreign materials, voids and discontinuities that could significantly affect its functional effectiveness.

Metamic-HT panels will be manufactured to Holtec's purchase specification [1.2.26] that incorporates all requirements set forth in this SAR. The supplier of raw materials must be qualified under Holtec's quality program for important to safety materials and components. The manufacturing of Metamic-HT is subject to all quality assurance requirements under Holtec International's NRC approved quality program.

The tests conducted on Metamic-HT to establish the compliance of the manufactured panels with Holtec's Purchasing Specification are intended to ensure that *critical characteristics* of the final product will meet the minimum guaranteed values (MGVs) set forth in this SAR. The tests are performed at both the raw material and manufactured panels stages of production with the former serving as the insurer of the properties in the final product and the latter serving the confirmatory function. Table 8.1.3 provides a summary of the required tests, their frequency and their intended purpose. The terms "batch" and "lot" referred to in Table 8.1.3 have the following meanings in the context of the manufacturing of Metamic-HT.

- Lot: A lot of Boron Carbide or of aluminum powder is the bulk of material provided by the raw material supplier with a specific property characterization data sheet. A Lot of B_4C or aluminum powder is typically in excess of 5,000 lbs.

- Batch: A batch of B_4C/Al mix is made from a distinct Lot of B_4C and a distinct lot of aluminum powder. Thus, a batch of mix cannot have B_4C (or Al) from more than one lot. All batches of mix derived from the same lot of B_4C and the same lot of aluminum are considered "sister" batches.

- A lot of Metamic-HT: A lot of Metamic-HT panels is the aggregate of all sister batches:

The tests and testing frequency set forth in Table 8.1.3 are guided by the satisfactory experience with the manufacturing of Metamic in the MPCs used in Holtec's HI-STORM 100 docket (Docket No. 72-1014).

In order to verify the acceptability of the Metamic-HT panels, qualification tests on specimens drawn from production runs shall be performed in compliance with Table 8.1.3 requirements to ensure that the manufactured panels shall render their intended function. Testing shall be performed using written and approved procedures consistent with the test methods documented in Holtec's test report [1.2.27]. Test results shall be appropriately documented and shall become a part of the cask final quality documentation package.

8.1.6 Shielding Tests

Users shall implement procedures which verify the integrity of the Holtite-B neutron shield once for each cask. Neutron shield integrity shall be verified via measurements either at first use or with a check source using, at a maximum, a 6x6 inch test grid over the entire surface of the neutron shield, including the impact limiters. Measurements shall be compared to calculated

HOLTEC INTERNATIONAL COPYRIGHTED MATERIAL

values representative of the loaded contents or the check source. Measurements shall be documented and become part of the final quality documentation package.

Following the first fuel loading of each HI-STAR 180 package, a shielding effectiveness test shall be performed to verify the effectiveness of the shielding using written and approved procedures. Calibrated radiation detection equipment shall be used to take measurements at the surface of the HI-STAR package. Measurements shall be taken at three cross sectional planes through the radial shield and at four points along each plane's circumference. The average measurement results from each sectional plane shall be compared to calculated values to assess the continued effectiveness of the shielding. The calculated values shall be representative of the loaded contents (e.g. fuel type, enrichment, burnup, cooling time, etc.). Measurements shall be documented and become part of the final quality documentation package.

8.1.7 Thermal Tests

Thermal tests of the cask or packaging are not required prior to using the packaging for the following reasons:

- The methodology used in the thermal analysis described in Chapter 3, Thermal Evaluation, is well established and proven.
- Thermal tests performed on HI-STAR 100 [Dockets 71-9261 and 72-1008] and HI-STORM 100 [Docket 72-1014] overpacks have shown that the thermal analysis methodology is conservative.
- The thermal performance of the HI-STAR 180 Package is achieved mainly by conduction and to a lesser degree radiation heat transfer. The thermal analysis conservatively does not credit convection heat transfer within the cask.
- The thermal analysis is performed with conservative thermal properties; and continuous and bounding gaps between heat transfer features.
- The HI-STAR 180 Packaging design, materials and features are not complex or novel to the extent of requiring verification by thermal tests.
- Significant voids within the monolithic shield cylinder that could affect heat transfer performance are unlikely. Routine radiographic testing of the monolithic shield cylinder casting material during fabrication provides further evidence that the casting material has negligible voids if any.

8.1.8 Miscellaneous Tests

No additional tests are required prior to using the packaging.

Table 8.1.1
Containment System Performance Specifications

Design Attribute	Design Rating
Leakage Rate Acceptance Criterion	$2x10^{-7}$ ref-cm^3/s helium (Leaktight per ANSI N14.5)
Leakage Rate Test Sensitivity	$1x10^{-7}$ ref-cm^3/s helium (½ of the leakage rate acceptance criterion)

Table 8.1.2
Leakage Rate Tests For The HI-STAR 180 Containment System

Leakage Test	Components Tested	Type of Leakage Rate Test (from ANSI N14.5-1997, App. A)	Allowable Leakage Rate
Fabrication Leakage Rate Test	• Containment Shell • Containment Baseplate • Containment Closure Flange • Containment Shell Welds • Containment Shell to Containment Baseplate Weld • Containment Shell to Containment Closure Flange Weld	A.5.3	Table 8.1.1
	• [PROPRIETARY TEXT REMOVED]Seal	A.5.4	Table 8.1.1
	• [PROPRIETARY TEXT REMOVED]Seal	A.5.4	Table 8.1.1
	• [PROPRIETARY TEXT REMOVED]Seal	A.5.4	Table 8.1.1
	• [PROPRIETARY TEXT REMOVED]Seal	A.5.4	Table 8.1.1
	• [PROPRIETARY TEXT REMOVED]Seal	A.5.4	Table 8.1.1
	• [PROPRIETARY TEXT REMOVED]Seal	A.5.4	Table 8.1.1
Pre-Shipment Leakage Rate Test	• [PROPRIETARY TEXT REMOVED]Seal	A.5.4	Table 8.1.1
	• [PROPRIETARY TEXT REMOVED]Seal	A.5.4	Table 8.1.1
	• [PROPRIETARY TEXT REMOVED]Seal	A.5.4	Table 8.1.1
	• [PROPRIETARY TEXT REMOVED]Seal	A.5.4	Table 8.1.1
	• [PROPRIETARY TEXT REMOVED]Seal	A.5.4	Table 8.1.1
	• [PROPRIETARY TEXT REMOVED]Seal	A.5.4	Table 8.1.1

HOLTEC INTERNATIONAL COPYRIGHTED MATERIAL

Table 8.1.3
Metamic-HT Testing Requirements

	Item Tested	Property Tested For	Frequency of Test	Purpose of Test	Acceptance Criterion
i.	B_4C powder (raw material) (see note 1)	Particle size distribution	One sample per lot	To verify material supplier's data sheet	Per Holtec's Purchasing Specification [1.2.26]
		Purity	One sample per lot	To verify material supplier's data sheet	ASTM C-750
ii.	Al Powder (raw material)	Particle Size Distribution	One sample per lot	To verify material supplier's data sheet	Per Holtec's Purchasing Specification [1.2.26]
		Purity	One sample per lot	To verify material supplier's data sheet	[PROPRIETARY TEXT REMOVED]
iii.	B_4C/Al Mix	B_4C Content (by the wet chemistry method)	One sample per batch	To ensure wt.% B_4C requirements compliance	[PROPRIETARY TEXT REMOVED]

HOLTEC INTERNATIONAL COPYRIGHTED MATERIAL

Table 8.1.3 (Continued)
Metamic-HT Testing Requirements

	Item Tested	Property Tested For	Frequency of Test	Purpose of Test	Acceptance Criterion
iv.	Finished Metamic-HT panel	Thickness and width, straightness, camber and bow	Each Panel	To ensure fabricability of the basket	Per Holtec's Purchasing Specification [1.2.26]
		Young's Modulus, Yield strength, and Elongation	Per Sampling Plan (see note 2)	To ensure structural performance.	MGV per Table 1.2.12
		B4C areal density (by neutron attenuation or wet chemistry)	One coupon from each Metamic-HT manufactured lot	To ensure criticality safety	MGV per Table 1.2.12
		Thermal Conductivity	One Sample from each Metamic-HT manufactured lot	To ensure thermal performance	MGV per Table 1.2.12

Notes:
1. The B_4C testing requirements apply if the raw material supplier is not in Holtec's Approved Vendor List.
2. Sampling Plan is included in the Metamic Manufacturing Manual [1.2.25].

HOLTEC INTERNATIONAL COPYRIGHTED MATERIAL

8.2 MAINTENANCE PROGRAM

An ongoing maintenance program for the HI-STAR 180 Package will be prepared and issued prior to the delivery and first use of the HI-STAR 180 Package as a part of its O&M Manual. This document shall delineate the detailed inspections, testing, and parts replacement necessary to ensure continued radiological safety, proper handling, and containment performance of the HI-STAR 180 Package in accordance with 10CFR71 regulations, conditions in the Certificate of Compliance, and the design requirements and criteria contained in this Safety Analysis Report (SAR).

The HI-STAR 180 package is totally passive by design. There are no active components or systems required to assure the continued performance of its safety functions. As a result, only minimal maintenance will be required over its lifetime, and this maintenance would primarily result from weathering effects, and pre- and post-usage requirements for transportation. Typical of such maintenance would be the reapplication of corrosion inhibiting materials on accessible external surfaces, seal replacement, and leak testing following seal replacement. Such maintenance requires methods and procedures no more demanding than those currently in use at nuclear power plants.

A maintenance inspections and tests program schedule for the HI-STAR 180 Package is provided in Table 8.2.1.

8.2.1 Structural and Pressure Tests

No periodic structural or pressure tests on the packaging following the initial acceptance tests are required to verify continuing performance.

8.2.2 Leakage Tests

A pre-shipment leakage rate test of cask [PROPRIETARY TEXT REMOVED] containment seals is performed following fuel loading, as described in Subsection 8.1.4, to ensure the packaging is leak tight in accordance with ANSI N14.5 [8.1.6]. This pre-shipment leakage rate test is valid for 1 year. If the pre-shipment leakage rate test expires, a pre-shipment leakage rate test of the [PROPRIETARY TEXT REMOVED]containment seals must be redone prior to transport.

8.2.3 Component and Material Tests

8.2.3.1 Relief Devices

The neutron shield relief devices shall be visually inspected for damage or indications of excessive corrosion prior to each transport of the HI-STAR 180 package. If the inspection determines an unacceptable condition, the neutron shield relief devices shall be replaced. The neutron shield relief devices shall be replaced periodically while the cask is in service if recommended by the manufacturer's O&M manual.

8.2.3.2 Shielding Materials

Periodic verification of the neutron shield integrity shall be performed within 5 years prior to each shipment. The periodic verification shall be performed by radiation measurements with either loaded contents or a check source. Measurements shall be taken at three cross sectional planes through the radial shield and at four points along each plane's circumference. The average measurement results from each sectional plane shall be compared to calculated values to assess the continued effectiveness of the neutron shield. The calculated values shall be representative of the loaded contents (i.e., fuel type, enrichment, burnup, cooling time, etc...) or the particular check source used for the measurements.

8.2.3.3 Packaging Surfaces

Accessible external surfaces of the packaging (including impact limiters) shall be visually inspected for damage prior to each fuel loading to ensure that the packaging effectiveness is not significantly reduced. Visual inspections of the cask and impact limiters shall be performed for external surface coating and component damage including surface denting, surface penetrations, weld cracking, chipped or missing coating. Where necessary, cask coatings shall be reapplied. Damage shall be evaluated for impact on packaging safety and shall be repaired or replaced accordingly. Wear and tear from normal use will not impact cask safety. Repairs or replacement in accordance with written and approved procedures, as set down in the O&M manual, shall be required if unacceptable conditions are identified.

Prior to installation or replacement of a closure seal, the cask sealing surface shall be cleaned and visually inspected for scratches, pitting or roughness, and affected surface areas shall be polished smooth or repaired as necessary in accordance with written and approved procedures.

8.2.3.4 Packaging Fasteners

Cask closure fasteners and impact limiter fasteners shall be visually inspected for damage such as excessive wear, galling, or indentations on the threaded surfaces prior to installation. The severity of thread damage shall be evaluated per standard industry practice. Damaged fasteners shall be replaced accordingly. Damaged internal threads may be repaired per standard industry practice.

Bolting [PROPRIETARY TEXT REMOVED] shall be replaced as guided by the fatigue analysis considerations presented in Subparagraph 2.6.1.3.2. The maintenance program in Table 8.2.1 provides a bolt change out schedule to insure that the cumulative damage factor accumulated by a bolt shall be less than 1.0 with sufficient margin. One bolting cycle is the complete sequence torquing and removal of bolts.

Containment Closure Flange internal closure bolt threads have a maximum service life limit based on bolting cycles as determined by the fatigue analysis considerations provided in Subparagraph 2.6.1.3.2. The bolting cycles specified in Table 8.2.1 shall not be exceeded. One bolting cycle is the complete sequence torquing and removal of bolts.

8.2.3.5 Cask Trunnions and Trunnion Replacement Plugs

Cask trunnions shall be inspected prior to each fuel loading. The accessible parts of the trunnions (areas outside the cask), and the local cask areas shall be visually examined to verify no deformation, distortion, or cracking has occurred. Any evidence of deformation (other than minor localized surface deformation due to contact pressure between lifting device and trunnion), distortion or cracking of the trunnion or adjacent cask areas shall require repair or replacement of the trunnion and/or repair of the cask. Following any replacements and/or repair, the load testing shall be re-performed and the components re-examined in accordance with the original procedure and acceptance criteria.

8.2.3.6 Closure Seals

The HI-STAR 180 Packaging is equipped with [PROPRIETARY TEXT REMOVED]seals [PROPRIETARY TEXT REMOVED] to ensure leak tightness. The closure seals are shipped from the factory pre-inspected and carefully packaged. Once installed and compressed, the seals should not be disturbed by removal of closure fasteners. Removal of closure fasteners requires replacement of closure seals. Closure seals are specified for long-term use and do not require additional maintenance.

8.2.3.7 Fuel Basket

No additional tests are required for the HI-STAR 180 fuel basket. Long-term fuel basket integrity has been ensured by fuel basket design and by extensive material testing. The essential fuel basket predicates provided in subparagraph 2.1.2.2(ii) (including the effects of creep and irradiation) in conjunction with the minimum guaranteed values (MGVs) provided in Table 1.2.12 ensure that the fuel basket will meet its performance requirements.

8.2.4 Thermal Tests

For each package, a periodic thermal performance test shall be performed within 5 years prior to each shipment to demonstrate that the thermal capabilities of the cask remain within its design basis.

HOLTEC INTERNATIONAL COPYRIGHTED MATERIAL

8.2.5 Miscellaneous Tests

No additional tests are required for the HI-STAR 180 Packaging, packaging components, or packaging materials.

HOLTEC INTERNATIONAL COPYRIGHTED MATERIAL

Table 8.2.1

Maintenance Inspections and Tests Program Schedule

Task	Schedule
Cask surface visual inspection. (See Paragraph 8.2.3.3)	Prior to each fuel loading
Cask closure fasteners/bolts visual inspection (See Paragraph 8.2.3.4)	Prior to installation and prior to each transport
Cask trunnion visual inspection (See Paragraph 8.2.3.5.)	Prior to each fuel loading
Impact limiter and impact limiters fasteners visual inspection (See Paragraph 8.2.3.3 and 8.2.3.4)	Prior to installation and prior to each transport
Neutron shield relief device visual inspection (See Paragraph 8.2.3.1)	Prior to each transport
Pre-shipment leakage test of containment system seals (See Subsection 8.2.2)	Following each fuel loading, and prior to off-site package transport if period from last test exceeds 1 year.
Seal replacement [PROPRIETARY TEXT REMOVED] (See Paragraph 8.2.3.6)	Following removal of closure bolting
Bolt replacement (*Service Life*) [PROPRIETARY TEXT REMOVED] (See Paragraph 8.2.3.4)	[PROPRIETARY TEXT REMOVED]
Containment Closure Flange internal closure bolt thread *Service Life* (See Paragraph 8.2.3.4)	4000 bolting cycles
Seal replacement [PROPRIETARY TEXT REMOVED] (See Paragraph 8.2.3.6)	Following removal of applicable access port plug
Seal replacement [PROPRIETARY TEXT REMOVED] (See Paragraph 8.2.3.6)	Following removal of applicable port cover fasteners
Neutron shield relief device replacement (See Paragraph 8.2.3.1)	If required by the manufacturer's O&M manual
Shielding Test (See Paragraph 8.2.3.2)	Within 5 years prior to each shipment
Thermal Test (See Subsection 8.2.4)	Within 5 years prior to each shipment

HOLTEC INTERNATIONAL COPYRIGHTED MATERIAL

8.3 REFERENCES

The following generic industry and Holtec produced references may have been consulted in the preparation of this document. Where specifically cited, the identifier is listed in the SAR text or table. Active Holtec Calculation Packages which are the repository of all relevant licensing and design basis calculations are annotated as "latest revision". Submittal of the latest revision of such Calculation Packages to the USNRC and other regulatory authorities during the course of regulatory reviews is managed under the company's Configuration Control system.

[8.0.1] U.S. Code of Federal Regulations, Title 10, "Energy", Part 71, "Packaging and Transportation of Radioactive Materials."

[8.1.1] American Society of Mechanical Engineers, "Boiler and Pressure Vessel Code," Sections II, III, V, IX, and XI, 2007

[8.1.2] American Society for Nondestructive Testing, "Personnel Qualification and Certification in Nondestructive Testing," Recommended Practice No. SNT-TC-1A, December 1992.

[8.1.3] American National Standards Institute, Institute for Nuclear Materials Management, "American National Standard for Radioactive Materials - Special Lifting Devices for Shipping Containers Weighing 10,000 Pounds (4500 kilograms) or More", ANSI N14.6, September 1993.

[8.1.4] U.S. Nuclear Regulatory Commission, "Fracture Toughness Criteria of Base Material for Ferritic Steel Shipping Cask Containment Vessels with a Maximum Wall Thickness of 4 Inches (0.1m)," Regulatory Guide 7.11, June 1991.

[8.1.5] U.S. Nuclear Regulatory Commission, "Fracture Toughness Criteria of Base Material for Ferritic Steel Shipping Cask Containment Vessels with a Wall Thickness Greater than 4 Inches (0.1m) But Not Exceeding 12 Inches (0.3m)," Regulatory Guide 7.12, June 1991.

[8.1.6] American National Standards Institute, Institute for Nuclear Materials Management, "American National Standard for Radioactive Materials Leakage Tests on Packages for Shipment", ANSI N14.5, 1997.