# FINAL SAFETY ANALYSIS REPORT

# CHAPTER 9

# AUXILIARY SYSTEMS


© 2008 UniStar Nuclear Services, LLC. All rights reserved.
COPYRIGHT PROTECTED

# 9.0 AUXILIARY SYSTEMS

This chapter of the U.S. EPR Final Safety Analysis Report (FSAR) is incorporated by reference with supplements as identified in the following sections.


© 2008 UniStar Nuclear Services, LLC. All rights reserved.
COPYRIGHT PROTECTED

## 9.1 FUEL STORAGE AND HANDLING

This section of the U.S. EPR FSAR is incorporated by reference with the following supplements.

### 9.1.1 CRITICALITY SAFETY OF NEW AND SPENT FUEL STORAGE AND HANDLING

#### 9.1.1.1 Design Bases

No departures or supplements.

#### 9.1.1.2 Facilities Description

No departures or supplements.

#### 9.1.1.3 Safety Evaluation

The U. S. EPR FSAR includes the following COL Item in Section 9.1.1.3:

> A COL applicant that references the U.S. EPR design certification will demonstrate that the design satisfies the criticality analysis requirements for the new and spent fuel storage racks, and describe the results of the analyses for normal and credible abnormal conditions, including a description of the methods used, approximations and assumptions made, and handling of design tolerances and uncertainties.

This COL Item is addressed as follows:

{The design and analyses for the new and spent fuel storage racks will be incorporated into a future revision, which will incorporate additional analyses to bound the site-specific conditions at BBNPP}.

#### 9.1.1.4 References

{No departures or supplements.}

### 9.1.2 NEW AND SPENT FUEL STORAGE

No departures or supplements.

#### 9.1.2.1 Design Bases

No departures or supplements.

#### 9.1.2.2 Facilities Description

##### 9.1.2.2.1 New Fuel Storage

The U. S. EPR FSAR includes the following COL Item in Section 9.1.2.2.1:

> A COL applicant that references the U.S. EPR design certification will describe the new fuel storage racks, including a description of confirmatory structural dynamic and stress analyses.

This COL Item is addressed as follows:


© 2008 UniStar Nuclear Services, LLC. All rights reserved.
COPYRIGHT PROTECTED

{The design and analyses for the new and spent fuel storage racks will be incorporated into a future revision, which will incorporate additional analyses to bound the site-specific conditions at BBNPP}.

#### 9.1.2.2.2 Spent Fuel Storage

The U. S. EPR FSAR includes the following COL Item in Section 9.1.2.2.2:

> A COL applicant that references the U.S. EPR design certification will describe the spent fuel storage racks, including a description of confirmatory structural dynamic and stress analyses and thermal-hydraulic cooling analyses.

This COL Item is addressed as follows:

{The design and analyses for the new and spent fuel storage racks will be incorporated into a future revision, which will incorporate additional analyses to bound the site-specific conditions at BBNPP}.

### 9.1.2.3 Safety Evaluation

No departures or supplements.

### 9.1.2.4 Inspection and Testing Requirements

No departures or supplements.

### 9.1.2.5 Instrumentation Requirements

No departures or supplements.

### 9.1.2.6 References

{No departures or supplements.}

## 9.1.3 SPENT FUEL POOL COOLING AND PURIFICATION SYSTEM

No departures or supplements.

## 9.1.4 FUEL HANDLING SYSTEM

No departures or supplements.

## 9.1.5 OVERHEAD HEAVY LOAD HANDLING SYSTEM

No departures or supplements.

### 9.1.5.1 Design Basis

No departures or supplements.

### 9.1.5.2 System Description

#### 9.1.5.2.1 General Description

No departures or supplements.


© 2008 UniStar Nuclear Services, LLC. All rights reserved.
COPYRIGHT PROTECTED

#### 9.1.5.2.2 Reactor Building Polar Crane

No departures or supplements.

#### 9.1.5.2.3 Fuel Building Auxiliary Crane

No departures or supplements.

#### 9.1.5.2.4 Other Overhead Load Handling Systems

No departures or supplements.

#### 9.1.5.2.5 System Operation

The U. S. EPR FSAR includes the following COL Item in Section 9.1.5.2.5:

> A COL applicant that references the U.S. EPR design certification will provide site-specific information on the heavy load handling program, including a commitment to procedures for heavy load lifts in the vicinity of irradiated fuel or safe shutdown equipment, and crane operator training and qualification.

This COL Item is addressed as follows:

**Procedures**

Administrative procedures to control heavy loads shall be developed prior to fuel load to allow sufficient time for plant staff familiarization, to allow NRC staff adequate time to review the procedures, and to develop operator licensing examinations. Heavy loads handling procedures address the following:

- Equipment identification.
- Required equipment inspections and acceptance criteria prior to performing lift and movement operations.
- Approved safe load paths and exclusion areas.
- Safety precautions and limitations.
- Special tools, rigging hardware, and equipment required for the heavy load lift.
- Rigging arrangement for the load.
- Adequate job steps and proper sequence for handling the load.

Safe load paths are defined for movement of heavy loads to minimize the potential for a load drop on irradiated fuel in the reactor vessel or spent fuel pool or on safe shutdown equipment. Paths are defined in procedures and equipment layout drawings. Safe load path procedures address the following general requirements.

- When heavy loads must be carried directly over the spent fuel pool, reactor vessel or safe shutdown equipment, procedures will limit the height of the load and the time the load is carried.
- When heavy loads could be carried (i.e., no physical means to prevent) but are not required to be carried directly over the spent fuel pool, reactor vessel or safe shutdown equipment, procedures will define an area over which loads shall not be carried so that if the load is dropped, it will not result in damage to spent fuel or operable safe shutdown equipment or compromise reactor vessel integrity.


© 2008 UniStar Nuclear Services, LLC. All rights reserved.
COPYRIGHT PROTECTED

- Where intervening structures are shown to provide protection, no load travel path is required.
- Defined safe load paths will follow, to the extent practical, structural floor members.
- When heavy loads movement is restricted by design or operational limitation, no safe load path is required.
- Supervision is present during heavy load lifts to enforce procedural requirements.

### Inspection and Testing

Cranes addressed in U.S. EPR FSAR Section 9.1.5 are inspected, tested, and maintained in accordance with ASME B30.2 (ASME, 2005), with the exception that tests and inspections may be performed prior to use for infrequently used cranes. Prior to making a heavy load lift, an inspection of the crane is made in accordance with the above applicable standards.

### Training and Qualification

Training and qualification of operators of cranes addressed in U.S. EPR FSAR Section 9.1.5 meet the requirements of ASME B30.2 (ASME, 2005), and include the following:

- Knowledge testing of the crane to be operated in accordance with the applicable ANSI crane standard.
- Practical testing for the type of crane to be operated.
- Supervisor signatory authority on the practical operating examination.
- Applicable physical requirements for crane operators as defined in the applicable crane standard.

### Quality Assurance

Procedures for control of heavy loads are developed in accordance with Section 13.5. In accordance with Section 17.5, other specific quality program controls are applied to the heavy loads handling program, targeted at those characteristics or critical attributes that render the equipment a significant contributor to plant safety.

## 9.1.5.3 Safety Evaluation

No departures or supplements.

## 9.1.5.4 Inspection and Testing Requirements

No departures or supplements.

## 9.1.5.5 Instrumentation Requirements

No departures or supplements.

## 9.1.5.6 References

{**ASME, 2005**. Overhead and Gantry Cranes – Top Running Bridge, Single or Multiple Girder, Top Running Trolley Hoist, ASME B30.2, American Society of Mechanical Engineers, 2005.}


© 2008 UniStar Nuclear Services, LLC. All rights reserved.
COPYRIGHT PROTECTED

## 9.2 WATER SYSTEMS

This section of the U.S. EPR FSAR is incorporated by reference with the following supplements.

### 9.2.1 ESSENTIAL SERVICE WATER SYSTEM

No departures or supplements.

#### 9.2.1.1 Design Bases

{The temperatures in U.S. EPR FSAR Tables 2.1-3 and 2.1-4 envelope the temperature data for the BBNPP Site and are described below.

The BBNPP site-specific wet and dry bulb temperatures were determined using the guidance of Regulatory Guide 1.27 (NRC, 1976) and 23 years of climatology data (1978-2000) from the Wilkes-Barre/Scranton National Weather Service site, that is 36 miles (58 km) northeast of the BBNPP site. The data analysis yielded a maximum calculated wet bulb temperature, when applying a 0% exceedance criterion, of 75.4° F (24.1° C) with a coincident dry bulb temperature of 95.3° F (37° C). The 0% exceedance criterion means that the wet bulb temperature does not exceed the 0% exceedance value for more than two consecutive data occurrences, and the Wilkes-Barre/Scranton National Weather Service data was recorded hourly.

The Essential Service Water System (ESWS) cooling towers for BBNPP are designed in accordance with Regulatory Guide 1.27 guidance and the requirements of U.S. EPR FSAR Table 2.1-1. The tower size is thus based on a wet bulb temperature of 81° F (27° C) with a coincident 115° F (46° C) dry bulb temperature. The wet bulb temperature includes a 1° F (0.5° C) addition for "interference" due to each pair of ESWS towers' close proximity to each other.

The higher wet bulb temperature of 75.4° F (24.1° C) is the controlling factor for establishing the tower basin water temperature because of the more limited ability of the ambient air to absorb heat energy in moving through the tower. Alternatively, the higher difference between wet and coincident dry bulb temperatures (81° F (27° C) wet bulb coincident with 115° F (46° C) dry bulb) indicates lower humidity and resultant higher evaporation rate, thus making this the controlling factor for determining both makeup water demand and required tower basin water volume. In applying these factors to BBNPP , the resulting maximum ESWS tower basin water temperature is less than the 95° F (35° C) worst-case design basis for the ESWS and the Component Cooling Water System (CCWS) heat exchangers. Based on the analysis of the ESWS (i.e., Ultimate Heat Sink (UHS)) with local meteorological data, it has been determined that the maximum ESWS supply temperature is less than 95° F (35° C) and the maximum evaporative loss from a ESWS cooling tower is 571 gpm (2,160 lpm), during design basis accident conditions, as described in U.S. EPR FSAR Table 2.1-1.}

#### 9.2.1.2 System Description

No departures or supplements.

#### 9.2.1.3 Component Description

No departures or supplements.

#### 9.2.1.4 Operation

No departures or supplements.


© 2008 UniStar Nuclear Services, LLC. All rights reserved.
COPYRIGHT PROTECTED

#### 9.2.1.5 Safety Evaluation

No departures or supplements.

#### 9.2.1.6 Inspection and Testing Requirements

No departures or supplements.

#### 9.2.1.7 Instrumentation Requirements

No departures or supplements.

#### 9.2.1.8 References

{**NRC, 1976.** Ultimate Heat Sink for Nuclear Power Plants (for Comment), Regulatory Guide 1.27, Revision 2, U. S. Nuclear Regulatory Commission, January 1976.}

### 9.2.2 COMPONENT COOLING WATER SYSTEM

No departures or supplements.

### 9.2.3 DEMINERALIZED WATER DISTRIBUTION SYSTEM

No departures or supplements.

### 9.2.4 POTABLE AND SANITARY WATER SYSTEMS (PSWS)

{The U.S. EPR FSAR describes the Potable and Sanitary Water System as a single system. While the function will remain the same, BBNPP classifies the system as two systems: the Potable Water System; and the Sanitary Waste Water System.

The Potable Water System delivers drinking quality water to various points throughout the plant, to individual components and for use as process water in other systems. Potable water is used for human consumption, sanitation and cleaning, and other domestic and process purposes inside the Nuclear Island (NI) and the Conventional Island (CI).

The Sanitary Waste Water System collects water discharged from water closets, urinals, showers, sinks and other sources of sanitary water and, with the exception of that from sources within the radiologically controlled area (RCA), directs it to a large sewer main. The sanitary water from sources within the RCA is directed to the Liquid Radwaste System by the NI vents and drains.

#### 9.2.4.1 Design Basis

The Potable Water System supplies potable water for human consumption, cleaning and other domestic purposes, plus process water to other systems, during periods of normal operation, shutdown, maintenance and construction. The Potable Water System provides potable water at a flow rate sufficient to meet demand and keep potable water pressure above connected equipment's or systems' pressures. Potable water supplied to, and equipment provided for, emergency eyewash stations and emergency showers complies with the requirements of ANSI Z358.1, Emergency Eyewash and Shower Equipment (ANSI, 2004).

The Sanitary Waste Water System conveys sanitary wastes from their point of origin, south to a large sewer main owned by Luzerne County. The sanitary waste water is treated in the county treatment facility. Where piping for the Sanitary Waste Water System is buried, provisions are made to assure adequate separation from Potable Water System piping. Where local


© 2008 UniStar Nuclear Services, LLC. All rights reserved.
COPYRIGHT PROTECTED

conditions prevent this separation, controls on layout and installation provide similar assurance of protection of potable water from contamination.}

#### 9.2.4.2 System Description

##### 9.2.4.2.1 General Description

The U.S. EPR FSAR includes the following COL Item in Section 9.2.4.2.1:

> A COL applicant that references the U.S. EPR design certification will provide site-specific details related to the sources and treatment of makeup to the PSWS along with a simplified piping and instrumentation diagram.

This COL Item is addressed as follows:

**{Potable Water System**

The Potable Water System is shown schematically in Figure 9.2-1.

The source of potable water is city water provided by Pennsylvania American Water Company (PAW) which provides water throughout the plant, for human consumption, cleaning and sanitation, and other domestic and selected process purposes. PAW supplies water that meets the requirements of local, State and Federal codes and specifications regarding potability. The system is designed to satisfy peak anticipated demand for potable water, including hot water, during all phases of plant operation.

The Potable Water System consists of distribution piping and valves, water heaters, and instrumentation for system monitoring, operation and control.

**Sanitary Waste Water System**

The Sanitary Waste Water System is shown schematically in Figure 9.2-2.

Sanitary waste water or sanitary water is the term applied to the drainage from water closets, urinals, showers, bathroom/washroom sinks, kitchen and janitorial sinks, clothes washing and dish washing machines. Sanitary waste loading usually includes biological waste (including fecal matter), soaps, cooking grease and food scraps. However, at the BBNPP, the sanitary waste stream is processed in two different ways depending on the source, due to differing contaminants.

The following locations within the NI have sanitary waste streams that have the potential to contain radioactive material. However, because these particular waste streams do not contain biological waste, cooking grease or food scraps, it is acceptable to collect them in the NI vents and drains system and direct them to the Liquid Waste Management System for processing as potentially radioactive waste:

- Personnel decon showers and decon sinks in the Access Building.
- Contaminated laundry facility in the Radioactive Waste Processing Building.

U.S. EPR FSAR Section 9.3.3 provides a discussion of the NI vents and drains system. The Liquid Waste Management System is discussed in U.S. EPR FSAR Section 11.2.


© 2008 UniStar Nuclear Services, LLC. All rights reserved.
COPYRIGHT PROTECTED

The following locations within the NI have sanitary waste water streams that are directed to the sewer main, because they have no connections to systems with the potential to carry radioactive materials:

- Water closets, urinals, hand wash sinks and personnel showers in the following areas:
  - Non-radiologically controlled area (non-RCA) in the Access Building.
  - Non-RCA in the Safeguards Buildings.
- Sink and dishwasher in the kitchen in Safeguards Building 2.
- Hand wash sinks in the Emergency Power Generating Buildings 1 through 4.

The waste stream from each of these locations/components is collected by the Sanitary Waste Water System and flows to collection pits or tanks, from which it drains by gravity and use of lift stations to the sewer main. The sanitary wastewater is treated in the county treatment plant.

#### 9.2.4.2.2 Component Description

### Potable Water System

*Piping and Valves*

Branch connections to equipment, including hose bibs, or to other systems are individually isolable and are equipped with backflow preventers to prevent backflow and potential contamination of the Potable Water System. Connections to sinks or showers do not require backflow preventers, because there is an air gap between the potable water and the receiving drains. However, siphon breakers are installed where needed.

*Water Heaters*

Water heaters are provided for showers, wash and janitorial sinks, lunchroom, kitchen, laundry, and eyewash stations, and are sized, installed and controlled in such fashion as to supply on-demand hot water. Eyewash stations and emergency showers also include pre-set temperature control valves to deliver tepid water, per OSHA requirements.

### Sanitary Waste Water System

*Piping and Valves*

Sanitary waste water piping is sized for peak anticipated loading during outage periods and as required to meet national and local plumbing code requirements.

*Collection Pits and Tanks*

Sanitary waste collection pits are concrete lined with steel. Tanks are constructed of steel.

*Lift Stations*

Steel wet well with associated control panel, valves, pumps, and level switches.

#### 9.2.4.2.3 Operations

No departures or supplements.


© 2008 UniStar Nuclear Services, LLC. All rights reserved.
COPYRIGHT PROTECTED

#### 9.2.4.3 Safety Evaluation

### Potable Water System

The Potable Water System is not a safety-related system. Therefore, it does not require a safety evaluation with respect to plant design basis events.

With respect to compliance with Criterion 60 of Appendix A to 10 CFR 50, the Potable Water System is not connected to any components or other systems that have the potential to carry radiological material, nor do any systems discharge to it with the exception of the city water provided by PAW that supplies makeup. Further, under normal operating conditions, system pressure is maintained above the pressure of supplied components or systems, thus preventing backflow from that supplied component / system.

In addition, a backflow preventer and isolation valve are provided at "hard" connections to supplied components or systems, including hose bibs. These devices are on the potable water side of the connection to prevent backflow under abnormal, reversed differential pressure conditions.

At sinks or showers, an air gap between the potable water supply and the receiving drain prevents possible contamination from backflow. There are also siphon breakers where necessary on supply risers.

With respect to flooding concerns, failure of potable water piping would not threaten the functionality of safety-related SSCs. The Potable Water System outdoor piping is located below grade. Buildings that house safety-related SSCs are constructed with ground floor slabs elevated above grade and intervening topography and site drainage configuration that would direct released water away from areas where it might otherwise cause damage (refer to Section 2.4.10). Inside buildings, flooding from failure of potable water piping will be effectively controlled by building floor drain systems that are designed to handle larger flows (e.g., the Fire Protection System (refer to Section 9.3.3 for discussion of floor drains)).

### Sanitary Waste Water System

The Sanitary Waste Water System provides no safety-related function. Therefore, it does not require a safety evaluation with respect to design basis events.

Sanitary waste water from decon showers, decon sinks and the laundry in the Access Building is directed to the Liquid Waste Management System, through the NI vents and drains system. Although drainage from showers, sinks and laundry is typically classified as sanitary water, the decon showers and sinks are used exclusively for radiological decontamination of personnel, and the laundry is used for personnel anti-contamination clothing and equipment (e.g., respirators). This does not result in biological waste loading, and is acceptable for forwarding to the Liquid Waste Management System.

With respect to compliance with Criterion 60 of Appendix A to 10 CFR 50 (CFR, 2008), sanitary waste piping in the Access Building leads from the non-RCA through the portion of the Sanitary Waste Water System that collects domestic waste water. This sanitary waste piping is completely separate from the NI vents and drains. Further, the portion of the Sanitary Waste Water System that collects domestic waste water in the Access Building, the Safeguards Buildings, and outside (underground) areas in the NI is not connected to any other system, so there is no potential for inadvertent introduction of radioactive material. The remainder of the Sanitary Waste Water System is outside the NI portion of the plant, and does not connect to any system or equipment that has the potential to carry/contain radiological contamination.


© 2008 UniStar Nuclear Services, LLC. All rights reserved.
COPYRIGHT PROTECTED

With respect to flood protection:

- The sanitary waste water collection pits, tanks, and lift stations are located at or below grade and in areas that are separated from safety-related SSCs. The drain lines from these pits or tanks are embedded in floor slabs and run underground outside the buildings. Inside the buildings, flooding from pits, tanks or broken sanitary lines will be effectively controlled by building floor drain systems that are designed to handle larger flows from, for example, the Fire Protection System (refer to U.S. EPR FSAR Section 9.3.3 for discussion of floor drains). Therefore, failures of the Sanitary Waste Water System, including failures of collection pits, tanks, or lift stations will not jeopardize safety functions by flooding.

#### 9.2.4.4 Inspection and Testing Requirements

**Potable Water System**

Once the system is placed in service, periodic routine sampling of the water provides ongoing verification of potability.

**Sanitary Waste Water System**

The Sanitary Waste Water System is visually inspected to verify installation in accordance with design drawings and documents, and functionally tested to demonstrate proper system operation.

#### 9.2.4.5 Instrumentation Requirements

Instrumentation includes pressure and flow as required for process automation, and for the visual and audible indication and alarms necessary for monitoring of system performance.

#### 9.2.4.6 References

This section is added as a supplement to the U. S. EPR FSAR.

**ANSI, 2004.** Emergency Eyewash and Shower Equipment, ANSI Z358.1, American National Standards Institute, 2004.

**CFR, 2008.** Control of Releases of Radioactive Materials to the Environment, Title 10, Code of Federal Regulations, Part 50, Appendix A, General Design Criterion 60, U. S. Nuclear Regulatory Commission, 2008.}

### 9.2.5 ULTIMATE HEAT SINK

No departures or supplements.

#### 9.2.5.1 Design Basis

{For BBNPP, the ESWEMS performs the function of the Ultimate Heat Sink (UHS) Makeup System. The ESWEMS is schematically represented in Figure 9.2-3.

Normal essential service water makeup provides up to 856 gpm (3,240 lpm) of water to each operating ESWS cooling tower basin to replenish ESWS inventory losses due to evaporation, blowdown, and drift during normal operations and shutdown/cooldown. ESWS cooling tower blowdown discharges up to 285 gpm (1,079 lpm) of water from each operating ESWS cooling tower basin to the retention basin to maintain ESWS chemistry. This quantity is based on maintaining three cycles of concentration in the cooling tower basin with 81° F (27° C) ambient


© 2008 UniStar Nuclear Services, LLC. All rights reserved.
COPYRIGHT PROTECTED

wet bulb temperature. Based on Susquehanna River chemistry, three cycles of concentration were conservatively selected for cooling tower operation. Estimated maximum cooling tower blowdown and makeup rates are based on three cycles of concentration. This is consistent with typical cooling tower operation of 3 to 5 cycles of concentration when using surface water makeup.

The ESWEMS, schematically represented in Figure 9.2-3, provides up to 400 gpm (1,515 l/min) of water to each operating ESWS cooling tower basin to replenish ESWS inventory losses due to evaporation, drift, and incidental system leakage starting 72 hours after an accident. This quantity is based on maximum evaporative losses 72 hours post-accident, with the ambient conditions matching the historical worst case 30-day period. The worst case 30-day period is depicted in Table 2.3-1. The water supply for the ESWEMS is contained in a safety-related retention pond that is sized using the same worst case 30-day period and accounts for seepage and pond evaporation or ice cover.

During a design basis accident, the ESWS Cooling Tower for one train has an evaporative loss of 571 gpm (2,160 lpm), and blowdown is secured.

The ESWS makeup chemical treatment system provides a means for adding chemicals to the ESWEMS and to the normal ESWS makeup system. This is done to limit corrosion, scaling, and biological contaminants in order to minimize component fouling. Normal makeup water to the ESWEMS Retention Pond is from the Raw Water Supply System (RWSS), which supplies filtered water from the Susquehanna River that may be chemically treated. In addition, chemical treatment may be added directly to the pond, as needed. The chemical treatment details for the ESWS are discussed in BBNPP ER Sections 3.3 and 3.6. The ESWEMS pumps can provide limited recirculation of the ESWEMS Retention Pond water.}

### 9.2.5.2 System Description

The U.S. EPR FSAR includes the following COL Item in Section 9.2.5.2:

> A COL applicant that references the U.S. EPR design certification will provide site-specific information for the UHS support systems such as makeup water, blowdown and chemical treatment (to control biofouling).

This COL Item is addressed as follows:

{Section 9.2.5.2.1 through Section 9.2.5.2.4 are added as a supplement to the U. S. EPR FSAR.

#### 9.2.5.2.1 Normal ESWS Makeup

Normal ESWS makeup water is provided to the ESWS cooling tower basins using filtered water from the Susquehanna River. FSAR Section 9.2.9 provides additional discussion of the Raw Water Supply System (RWSS) that supplies water for the initial fill and makeup water for the ESWS under normal operation. Normal ESWS makeup water is delivered from the CWS Makeup Water Intake Structure to the power block area in a single header from which four branch lines feeds each of the four ESWS divisions. Each ESWS division's normal makeup line ties into its ESWS emergency makeup line (i.e., UHS makeup water line) through a safety-related motor operated valve (MOV) in the ESWS pumphouse at the ESWS cooling tower basin. The tie-in point is inboard of (or downstream of) the ESWEMS isolation MOV. The safety-related normal makeup water isolation MOV ensures the integrity of the ESWS cooling tower basin and the ESWEMS by closing in the event of a design basis accident (DBA).


© 2008 UniStar Nuclear Services, LLC. All rights reserved.
COPYRIGHT PROTECTED

#### 9.2.5.2.2 Blowdown

Blowdown from the ESWS cooling tower basins is a non-safety-related function. The site-specific blowdown arrangement for each ESWS cooling tower basin is a line that runs from the ESWS pump's discharge piping to a header in the yard area where all four blowdown lines join. The header then runs to the waste water retention basin.

The connection at the ESWS pump discharge is made through a safety-related MOV that closes automatically in the event of a DBA to ensure ESWS integrity.

An alternate blowdown path is provided from the same pump discharge connection through a second safety-related MOV in case the normal path is unavailable.

Under normal operating conditions and shutdown/cooldown conditions, the normal blowdown valves automatically modulate blowdown flow from their ESWS trains to the Waste Water Retention Basin to help ensure cooling water chemistry remains within established limits.

During a DBA, blowdown flow can be manually controlled from the main control room by adjustment of the safety-related MOV.

#### 9.2.5.2.3 Essential Service Water Emergency Makeup System

Emergency makeup water for the ESWS is provided by the site-specific, safety-related Essential Service Water Emergency Makeup System (ESWEMS) that draws water from a site specific retention pond. Makeup water enters the ESWEMS Pumphouse through bar screens that remove large debris and trash that may be entrained in the flow.

The ESWEMS Pumphouse is shown in Figure 9.2-4 (Floor Plan) with the section views provided in Figure 9.2-5, Figure 9.2-6, Figure 9.2-7 and plan views of the pump well (Figure 9.2-8), the Mezzanine (Figure 9.2-9) and the roof (Figure 9.2-10).

There are four independent ESWEMS trains, one for each ESWS division. Each parallel and identical train is structurally isolated by adjacent concrete walls within the ESWEMS Pumphouse. Each train consists of one vertical wet pit pump, a discharge check valve, a self-cleaning automatic strainer, a pump discharge isolation valve (all housed in the ESWEMS Pumphouse), and the underground piping running up to and into the ESWS Pumphouse at the ESWS cooling tower basin. The ESWEMS isolation MOV is located inside the ESWS pumphouse at the connection to the ESWS cooling tower basin.

In addition, each train has a recirculation line that runs from just upstream of the isolation MOV at the ESWS cooling tower basin, through a safety-related MOV, back to the ESWEMS Retention Pond. After 72 hours have elapsed under accident conditions, the safety-related recirculation isolation MOVs operate in conjunction with the ESWEMS isolation MOVs to allow the ESWEMS pumps to operate within their optimum range by modulating the flow of water back to the ESWEMS Retention Pond, based on control inputs from the ESWS Cooling Tower basin water level control systems.

Instrumentation and controls are provided for monitoring and controlling individual components and system functions.


© 2008 UniStar Nuclear Services, LLC. All rights reserved.
COPYRIGHT PROTECTED

The pump, check valve, and strainer for each train are located in one of four separate pump bays in the ESWEMS pumphouse. The associated electrical switchgear and equipment for each train's pump and MOV is similarly housed in the same pump bay as its corresponding train.

#### 9.2.5.2.4 ESWS Makeup Water Chemical Treatment

The ESWEMS is normally in standby mode, and its water is therefore stagnant. Specific chemistry requirements are defined to minimize corrosion, prevent scale formation, and limit biological and sedimentary fouling that could inhibit ESWEMS flow. In addition, there are chemical additives used in the ESWS cooling towers to reduce scaling and corrosion, and to treat potential biological contaminants, which are added via the normal ESWS piping. The ESW makeup chemical treatment system provides the chemistry control in both instances.

The treatment system consists of multiple skid-mounted arrangements, one for each division's ESWS cooling tower. Each skid contains the equipment, instrumentation and controls to fulfill the system's function of both monitoring and adjusting water chemistry. The root valves at the connections of chemical addition and sample lines to the ESWEMS or normal ESWS piping are safety-related as necessary to ensure the integrity of ESWEMS piping during and following a DBA.

The specific chemicals and addition rates are determined by periodic water chemistry analyses.The cooling system water will be chemically treated to adjust pH and to control deposits, corrosion, and biological growth. Specific chemicals and concentrations are discussed in detail in BBNPP ER Section 3.3 and 3.6.

Additions to the ESWS cooling towers are made as necessary on a periodic or continuing basis. The additions to the ESWEMS are made coincident with surveillance test runs, or as otherwise needed.

The Susquehanna River is the source of water supplied by the RWSS. This water is characterized as moderately hard, alkaline water with a low dissolved solids content averaging 143 mg/l.

An oxidizing biocide is selected to control microbiological growth in service water piping to control fouling, microbiological deposits, and microbiological related corrosion in service water piping. Sodium hypochlorite solution is injected intermittently in the RWSS makeup line to the ESWEMS Retention Pond. Facilities for sodium hypochlorite storage and injection also will be located near the river intake structure and chemicals will be injected near the RWSS pumps.

All components of the RWSS chemical treatment system are constructed of materials compatible with the chemicals utilized in the treatment system.

### 9.2.5.3 Component Description

#### Normal ESW Makeup Isolation Valves

The normal ESWS Makeup Water System isolation valves are safety-related MOVs designed to ASME Section III, Class 3 requirements.

#### ESWEMS Pumphouse Bar Screens

The ESWEMS Pumphouse includes four bar screens, one in each pump bay. These screens are designed to seismic class II standards. They prevent debris from passing into the ESWEMS pumps, and subsequently into the Component Cooling Water System heat exchangers, as well as the intercoolers, lube oil coolers, and water jackets of the


© 2008 UniStar Nuclear Services, LLC. All rights reserved.
COPYRIGHT PROTECTED

emergency diesel generators. The influent flow past the bar screens is not sufficient enough to warrant an automatic screen wash system. The screens can be cleaned at regular maintenance intervals. The bar screens have a large enough face area that potential blockage to the point of preventing the minimum required flow through them is not a concern. The screens are sufficiently submerged approximately 30 ft (9 m) below the nominal surface grade that frazil ice blockage is not a concern.

**ESWEMS System Pumps**

There are four vertical turbine pumps, each rated at 400 gpm (approximately 1515 l/min). Each pump is driven by an electric motor, and is equipped with a discharge check valve. They are designed to ASME Section III, Class 3 requirements, and constructed of materials compatible with the ESWS makeup water.

**ESWEMS Isolation Valves**

The ESWEMS isolation valves are safety-related MOVs designed to ASME Section III, Class 3 requirements, and are made of materials compatible with the emergency makeup water.

**ESWEMS Recirculation Valves**

The ESWEMS recirculation isolation valves are safety-related MOVs designed to ASME Section III, Class 3 requirements, and are made of materials compatible with the emergency makeup water.

**ESWEMS Self Cleaning Strainers**

There are four ESWEMS self-cleaning strainers, one on the discharge side of each ESWEMS pump. They are designed to ASME Section III, Class 3 requirements, and constructed of materials compatible with the makeup water.

The strainers remove debris from the process flow that could cause sedimentation buildup in the ESWS Cooling Tower basins. Effluent from the strainers is returned to the ESWEMS Retention Pond through the ESWEMS recirculation/bypass line.

**ESWEMS Piping**

The ESWEMS piping and fittings are designed to ASME Section III, Class 3 requirements, including normal operation and anticipated transient conditions. They are constructed of materials compatible with the makeup water. There is also non-ASME piping.

**ESWEMS Retention Pond**

The ESWEMS Retention Pond is an excavation in existing soils. Embankments are provided for additional freeboard and as required to match higher topography, but are not necessary to maintain the required volume of water for emergency makeup.

The approximate dimensions of the pond at grade 674 ft (205 m) msl are 700 ft (213 m) by 400 ft (122 m). The bottom of the pond elevation is 652 ft (199 m) msl, and the side slopes are 3 horizontal to 1 vertical. The side slopes are protected by riprap from the


© 2008 UniStar Nuclear Services, LLC. All rights reserved.
COPYRIGHT PROTECTED

surrounding grade elevation to 662 ft (202 m) msl. The normal water level in the pond is elevation 669 ft (204 m) msl. A reinforced concrete outlet structure is provided for outflow from the pond.

Approximately 76.6 acre-ft of water is maintained below the normal operational water level of 17 ft (5 m), elevation 669 ft (204 m) msl. The minimum required level 12 ft (4 m), elevation 664 ft (202 m) msl, which maintains a volume of approximately 50.3 acre-ft. The ESWEMS Retention Pond was sized for the design basis LOCA in accordance with NRC Regulatory Guide 1.27 assuming the ESWEMS does not start up until 72 hours post-accident with two ESWS trains running. The total inventory loss from the ESWEMS retention pond during the 30 day period under the most limiting meteorological conditions (maximum evaporation conditions) was conservatively calculated to be 46.4 acre-ft. The worst case environmental conditions are described in Section 2.3.1.2.12. This inventory loss consists of the following calculated losses and design allowances: (1) 34.2 acre-ft for cooling tower evaporation; (2) 9.8 acre-ft for loss to an ice cover; (3) 2.4 acre-ft for pond seepage. The total water remaining after 30 days is 3.9 acre-ft. All of the remaining water is usable, which provides a margin greater than 8**%** of the total volume requirement.

Degradation due to siltation will not occur because of the normally quiet state of the pond and the composition of the in situ clay materials.

Structural design of the ESWEMS Retention Pond is discussed in Section 3.8.4.

A nonseismic Category I makeup line provides normal makeup water for the pond. The source of the makeup water is the RWSS. Plant procedures control makeup to the ESWEMS Retention Pond.

### ESWS Cooling Tower Blowdown System Isolation Valves

These are safety-related MOVs that isolate blowdown at the branch connection on the ESWS pump discharge, for assurance of ESWS integrity in the event of an accident. The valves and the branch connections up to the valves are designed to ASME Section III, Class 3 requirements, and constructed of materials compatible with the makeup water.

### ESWS Cooling Tower Blowdown System Piping, Valves and Fittings

The ESWS Cooling Tower Blowdown System components downstream of the safety-related MOV are non-safety-related. They are made of carbon steel material.

### Chemical Treatment System Isolation Valves

The valves at the chemical treatment system connections to the normal ESWS or the ESWEMS piping are safety-related to assure the system integrity in the event of a DBA. The valves comply with the requirements of ASME Section III, Class 3 and are constructed of materials compatible with chemicals injected, as are the piping branches from the safety-related piping to which they connect.

### Chemical Treatment System Components

The components of the chemical treatment system upstream of the safety-related MOV are non-safety-related. The components include metering pumps, pipes, chemical storage tanks, control valves, and sampling valves and lines.


© 2008 UniStar Nuclear Services, LLC. All rights reserved.
COPYRIGHT PROTECTED

All of these components are constructed of materials compatible with the chemicals utilized in the treatment system.

#### 9.2.5.4 System Operation

##### 9.2.5.4.1 Normal Operating Conditions

The normal ESWS makeup is supplied by the RWSS from the Susquehanna River. The RWSS provides filtered water from the media filter beds located in the Water Treatment Building to each of the ESWS cooling tower basins. The two operating ESWS divisions have the normal makeup MOVs open, while the two standby divisions' normal makeup MOVs are closed.

Blowdown from each train is aligned to the Waste Water Retention Basin, with flow rate controlled by manual adjustment of the safety-related motor operated blowdown isolation valve.

The ESWEMS for each division is in standby, with the ESWEMS isolation MOV at the ESWS cooling tower basin closed and the pump isolation MOV closed. The recirculation line's MOV is also closed.

Periodic surveillance testing is conducted to demonstrate ESWEMS operability, and includes addition of chemicals as necessary to maintain its water chemistry within the prescribed limits.

##### 9.2.5.4.2 Abnormal Operating Conditions

On receipt of an accident signal, the normal ESWS Makeup Water System isolation MOVs that are open will close; those that are closed will remain closed. In addition, the ESWS cooling tower blowdown isolation valves will close, and any open safety-related valves in the chemical treatment system will close. None of these safety-related valves can be opened until the accident signal is cleared. Subsequent action is manually initiated from the main control room or locally, based on operators' judgment resulting from prevailing conditions and indications. This includes initiating the ESWEMS to any and/or all ESWS cooling tower basins, as well as blowdown from any and/or all ESWS cooling tower basins. After 72 hours have elapsed under accident conditions, the safety-related recirculation isolation MOVs operate in conjunction with the ESWEMS isolation MOVs to allow the ESWEMS pumps to operate within their optimum range by modulating the flow of water back to the ESWEMS Retention Pond, based on control inputs from the ESWS Cooling Tower basin water level control systems.

#### 9.2.5.5 Safety Evaluation

Normal ESWS makeup is a non-safety-related function, and thus requires no safety evaluation with respect to design basis events. Similarly, both cooling tower blowdown and chemical treatment are non-safety-related functions and require no safety evaluation. However, the connections to safety-related piping through which these functions are made and the accompanying isolation valves are safety-related, which ensures the integrity of the safety-related piping in the event of a DBA.

The ESWEMS function is to provide reliable makeup to the ESWS cooling tower basins, starting no later than 72 hours after receipt of an accident signal, to ensure that sufficient makeup flow is provided so the ESWS can fulfill its design requirement of shutdown decay heat removal for a minimum of 30 days following a DBA.

This function is assured because the ESWEMS:


© 2008 UniStar Nuclear Services, LLC. All rights reserved.
COPYRIGHT PROTECTED

- Is designed, procured, constructed and operated in accordance with the criteria for ASME Section III, Class 3 safety-related systems, structures and components, and Seismic Category 1 requirements, including the tie-in piping and isolation valves for normal makeup, and chemical addition and sampling,
- Has four equivalent and completely independent trains, each capable of providing the worst case makeup flow to each ESWS train,
- Has an ESWEMS Pumphouse which is designed and built for protection against seismic and missile hazards,
- Has seismically qualified and installed (buried) piping runs from the ESWEMS pumphouse to the individual ESWS cooling tower basins,
- Is periodically performance tested and sampled to confirm operability and verify system water chemistry requirements, and
- Has bar screens large enough to preclude the occurrence of their being blocked to the extent that minimum required flow of water cannot be maintained.

Grading around the ESWEMS Retention Pond is sloped to keep surface stormwater from entering the pond. To prevent an overflow caused by malfunction of the makeup system or by rainfall accumulation in the ESWEMS Retention Pond, an outlet structure and spillway are provided to drain excess storage when the water surface in the pond exceeds the designed outlet crest elevation of 674 ft (205 m). Additional information related to potential flooding from the ESWEMS Retention Pond is provided in Section 2.4.8.

Internal flooding of the ESWEMS Pumphouse is discussed in Section 3.4.3.1.

In addition, reconciliation of the site-specific climatology data has demonstrated that the ESWS cooling tower performance maintains the ESWS temperature below the required 95°F (35°C).

#### 9.2.5.6 Inspection and Testing Requirements

The ESWEMS components, including the safety-related motor operated isolation valves for makeup, makeup recirculation isolation and blowdown, and the safety-related isolation valves for chemical treatment and sampling, are procured and fabricated in accordance with the quality requirements for safety-related ASME Section III, Class 3 systems, structures and components to ensure compliance with approved specifications and design documents.

Installation of individual components and overall system construction are inspected to verify the as-built condition is in accordance with approved drawings. Performance testing upon completion of construction verifies the system's ability to perform its design safety function.

Finally, periodic surveillance testing of the system, including the safety-related isolation valves and the safety-related recirculation isolation valves, provides continuing assurance of the system's ongoing capability to perform its design function. Surveillance testing includes system performance tests and inspection of individual components, as appropriate to their importance to system function and their tendency to degrade due to their operational conditions and environment.

#### 9.2.5.7 Instrumentation Applications

Instrumentation is applied to the ESWS Normal Makeup Water System, ESWEMS and blowdown, to the extent necessary to monitor essential component conditions and verify real time system performance. This includes limit switches that provide remote position indication


© 2008 UniStar Nuclear Services, LLC. All rights reserved.
COPYRIGHT PROTECTED

for valves. It also includes pressure, temperature and differential pressure sensors that provide local and remote display of system pressure, temperature and flow. In addition, temperature and amperage sensors can be used for indirect flow indication and direct indication of component status. ESWEMS Retention Pond level indication and temperature is provided in each pump bay.

System performance can also be assessed using level indication on the ESWS cooling tower basins.}

#### 9.2.5.8 References

No departures or supplements.

### 9.2.6 CONDENSATE STORAGE FACILITIES

No departures or supplements.

### 9.2.7 SEAL WATER SUPPLY SYSTEM

No departures or supplements.

### 9.2.8 SAFETY CHILLED WATER SYSTEM

No departures or supplements.

### 9.2.9 RAW WATER SUPPLY SYSTEM

The U. S. EPR FSAR includes the following COL Item in Section 9.2.9:

> The RWSS and the design requirements of the RWSS are site-specific and will be addressed by the COL applicant.

This COL Item is addressed as follows:

{Raw water is the term usually applied to untreated water. At BBNPP, the Raw Water Supply System (RWSS) supplies raw water drawn from the Susquehanna River directly to the points of use, which comprise the floor wash header, plant demineralized water, essential service water, and fire protection systems. The municipal water supply provides water to the potable and sanitary water systems as described in Section 9.2.4. Raw water pumped from the Susquehanna River passes through strainers before being delivered to the plant site. The strained raw water passes through media filters before being supplied to the demineralized water treatment system, fire protection system water storage tank, floor wash header, and ESWS Cooling Tower basins. It also supplies the initial fill for the ESWEMS Retention Pond and as needed for makeup. This encompasses the plant water demands, with the exception of potable and sanitary water Circulating Water System makeup and ESWS makeup, during emergency conditions.

Section 9.2.9.1 through Section 9.2.9.7 are added as a supplement to the U. S. EPR FSAR.

#### 9.2.9.1 Design Basis

No cross connections exist between raw Susquehanna water supplied to the usage points and any system with the potential to carry radioactive material. This design requirement satisfies Criterion 60 of Appendix A to 10 CFR 50 (CFR, 2008).


© 2008 UniStar Nuclear Services, LLC. All rights reserved.
COPYRIGHT PROTECTED

Raw water from the Susquehanna River passes through strainers before it is delivered to the media filters. After filtration, the water is supplied to the demineralized water treatment system, the fire protection system water storage tanks, floor wash header, the essential service water system and ESWEMS Retention Pond (except under emergency operating conditions) during periods of normal power operation, shutdown, maintenance and construction. The emergency makeup to essential service water is provided by a dedicated, safety-related system. The ESWEMS is discussed in Section 9.2.5.

#### 9.2.9.2 System Description

Raw water is distributed to the connected systems through a non-safety-related piping. The raw water supply system is a non-safety-related, non-seismic system that provides all of the water for plant use, with the exception of Circulating Water System Makeup, potable and sanitary and under emergency conditions, ESWS makeup.

The Raw Water Supply System supplies water for initial fill and makeup to the following systems:

- Essential Service Water during all but emergency conditions.
- ESWEMS Retention Pond.
- Demineralized water.
- Fire protection.

The raw water supply is schematically represented in Figure 9.2-1.

The raw water supply system pumps provide the motive force to pump water from the Susquehanna River through the strainers and media filters and distribute it to the demineralized water, fire protection, and essential service water systems, and the ESWEMS Retention Pond, for their initial fill, and as needed for makeup. A tap is provided on the makeup line to the ESWEMS Retention Pond for injection of water treatment chemicals. Emergency makeup to the ESWS is provided by the dedicated ESWEMS, described in Section 9.2.5. Makeup to the potable and sanitary water systems is provided by the municipal water supply as described in Section 9.2.4.

The required makeup flow to the demineralized water treatment system is 107 gpm ( 405 lpm) during all modes of operation. The minimum and maximum RWSS makeup flows to the ESWS cooling towers are 1,713 gpm (7,124 lpm) and 3,426 gpm (12,969 lpm), respectively. During normal operation, raw water demand is approximately 1,820 gpm (6,889 lpm) (1,713 + 107 gpm). Peak demand of approximately 3,533 gpm (13,373 lpm) (3,426 + 107 gpm) occurs for approximately 4 to 6 hours during normal plant shutdown/cooldown operations, and is driven by additional makeup to the ESWS.

#### 9.2.9.3 Component Descriptions

**Raw Water Piping and Valves**

Raw water flows from the intake structure to the Water Treatment Building and supplied systems through non-safety-related underground piping. The piping and valves which connect the system components to each other and to the supplied systems are made of materials compatible with the river water.

**Raw Water Pumps**


© 2008 UniStar Nuclear Services, LLC. All rights reserved.
COPYRIGHT PROTECTED

These are vertical wet pit pumps located in the intake structure. Each pump is equipped with a discharge check valve and discharge isolation valve. The combined flow from three pumps provides enough flow to supply the continuous makeup requirements for the ESWS and demineralized water, plus the single largest intermittent flow which is for a media filter backwash cycle.

**Raw Water Strainers**

An automatic, self-cleaning strainer is located at the discharge of each raw water pump. The strainers remove large particulate material from the raw water before it is pumped to the ESWEMS Retention Pond and media filters. The backwash flows from the strainers discharge to the Susquehanna River.

**Raw Water Media Filters**

The media filters reduce the suspended solids concentration of the raw water before it is distributed to the demineralized water treatment, fire protection, essential service water system, and ESWEMS Retention Pond. Each media filter bed is sized to filter the water required to supply two essential service water cooling towers and the demineralized water system. Discharge from the media filters provides the filtered water required to backwash the adjacent filter beds. Compressed air is used to scour the filter media in conjunction with the backwash water to improve particulate removal from the filter beds. The media filters are located in the Water Treatment Building, and the filter backwash water is discharged to the site waste water retention pond.

#### 9.2.9.4 Safety Evaluation

The raw water supply provides no safety-related function. Therefore, no safety evaluation is required with respect to plant design basis events.

There is no connection between raw water and the components or other systems that have the potential to carry radiological contamination. This complies with Criterion 60 of Appendix A to 10 CFR 50 (CFR, 2008).

With respect to potential flooding caused by failures of piping or components, the raw water piping is located remote from any safety-related systems or equipment, except for the lines connecting to the ESWS cooling tower basins and the ESWEMS Retention Pond. Failures other than at the cooling tower basin and ESWEMS Retention Pond connections will not adversely impact safety functions because the plant storm water controls are designed to divert surface water flow. The connections to the tower basins are made through safety-related motor operated valves, thereby assuring basin integrity under accident conditions. Potential leakage from the raw water lines in the essential service water pump houses is controlled, collected, and routed away by the floor drains in those structures. These floor drain lines include check valves where necessary to prevent possible backflow from causing flooding that could adversely affect the safety-related equipment. The RWSS makeup to the ESWEMS Retention Pond will discharge above the ESWEMS Retention Pond water level, through a line that runs over the top of the ESWEMS Retention Pond dike. This will minimize the potential for draining or siphoning of the pond. It will also minimize the potential for damage to the dike caused by a rupture of the RWSS makeup line. Provision is made for draining the above ground portion of the makeup line to prevent the line from freezing.


© 2008 UniStar Nuclear Services, LLC. All rights reserved.
COPYRIGHT PROTECTED

#### 9.2.9.5 Inspection and Testing Requirements

Visual inspections are conducted during construction to verify that the as-built condition is in accordance with design documents. Pressure testing and functional testing are conducted during post-construction pre-commissioning and startup, as necessary to confirm system integrity and proper operation of individual components and the total system. Portions of the system are demonstrated with in-service leak testing where such method does not jeopardize other systems/equipment and is sufficient to demonstrate proper operation.

Ongoing system operation provides continuing demonstration of the system's functionality.

#### 9.2.9.6 Instrumentation Requirements

Instrumentation includes sensing and display of various parameters as necessary to automate system function, and to provide for local and remote system monitoring, including alarms. These parameters include essential service water makeup flows, demineralized water system feed flow, strainer and media filter differential pressures, and pump discharge pressures. Valve position indication for selected valves and pump power on/off indication are also provided.

#### 9.2.9.7 References

**CFR, 2008.** Control of Releases of Radioactive Materials to the Environment, Title 10, Code of Federal Regulations, Part 50, Appendix A, General Design Criterion 60, U. S. Nuclear Regulatory Commission, 2008.}


© 2008 UniStar Nuclear Services, LLC. All rights reserved.
COPYRIGHT PROTECTED

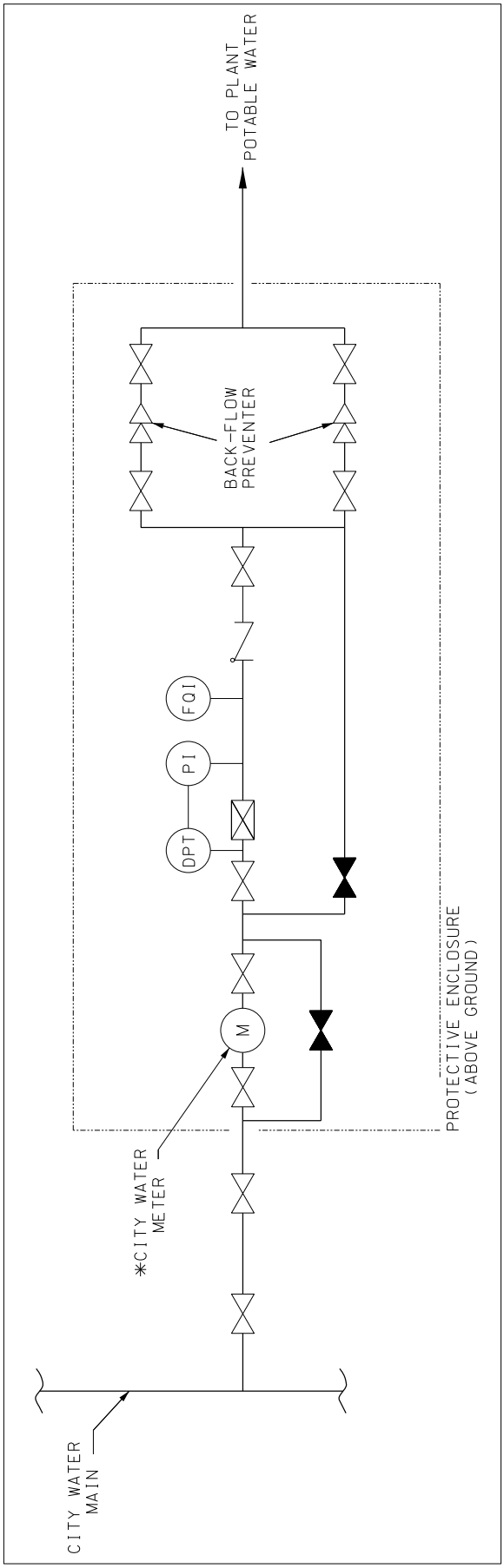


**Figure 9.2-1 {Potable Water}**


© 2008 UniStar Nuclear Services, LLC. All rights reserved.
COPYRIGHT PROTECTED

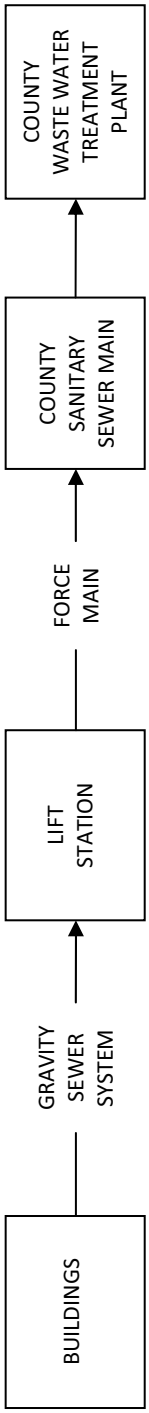


**Figure 9.2-2 {Sanitary Waste Water System}**


© 2008 UniStar Nuclear Services, LLC. All rights reserved.
COPYRIGHT PROTECTED

**Figure 9.2-3 {ESWEMS Schematic}**

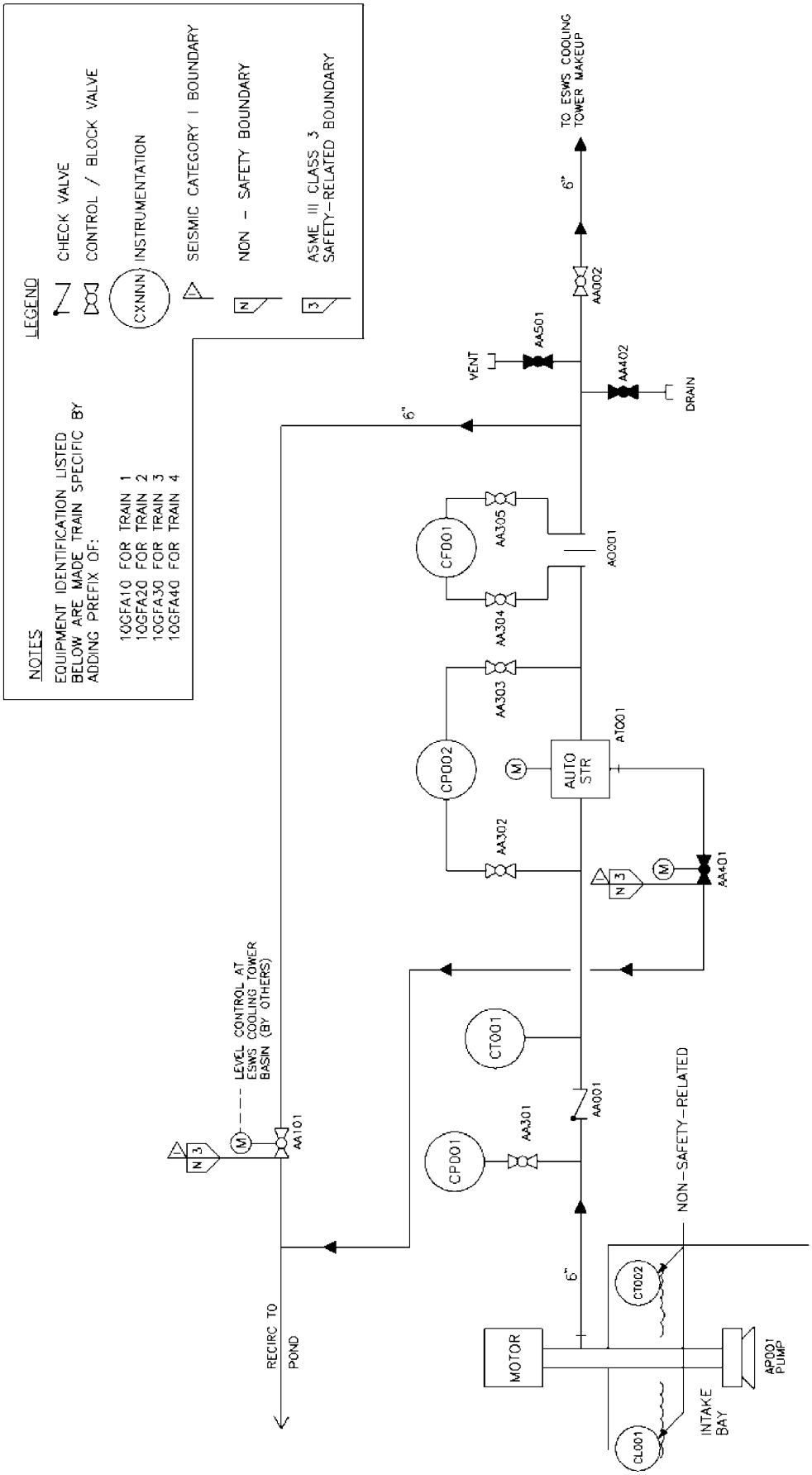



© 2008 UniStar Nuclear Services, LLC. All rights reserved.
COPYRIGHT PROTECTED

Figure 9.2-4 {Plant Arrangement - ESWEMS Pumphouse Floor Plan}

This figure contains security related information and has been withheld under 10 CFR 2.390 (d)(1)

See Part 9 of the COLA Application


© 2008 UniStar Nuclear Services, LLC. All rights reserved.
COPYRIGHT PROTECTED

Figure 9.2-5 {Plant Arrangement - ESWEMS Pumphouse Section A-A}

This figure contains security related information and has been withheld under 10 CFR 2.390 (d)(1)

See Part 9 of the COLA Application


© 2008 UniStar Nuclear Services, LLC. All rights reserved.
COPYRIGHT PROTECTED

**Figure 9.2-6 {Plant Arrangement - ESWEMS Pumphouse Section B-B}**

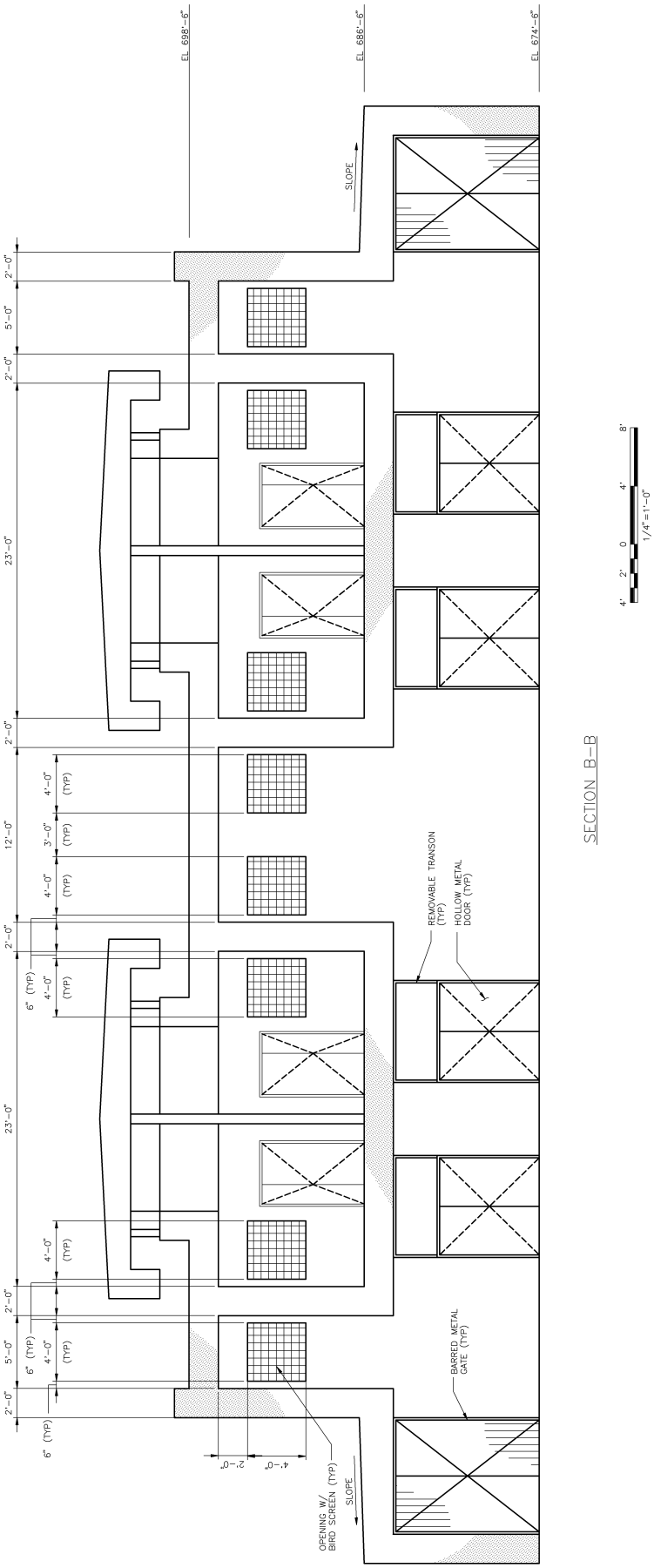



© 2008 UniStar Nuclear Services, LLC. All rights reserved.
COPYRIGHT PROTECTED

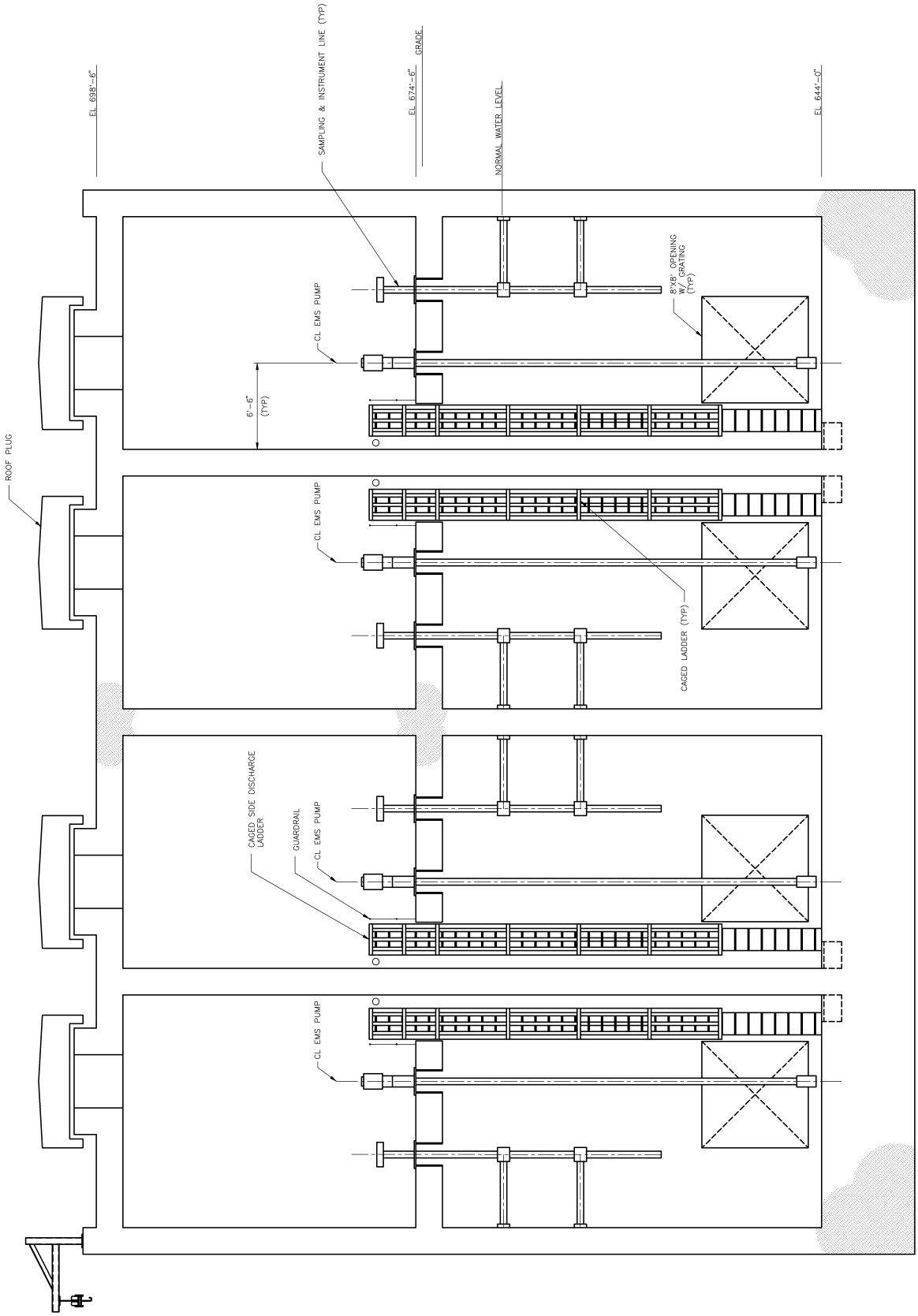


**Figure 9.2-7 {Plant Arrangement - ESWEMS Pumphouse Section C-C}**


© 2008 UniStar Nuclear Services, LLC. All rights reserved.
COPYRIGHT PROTECTED

**Figure 9.2-8 {Plant Arrangement - ESWEMS Pumpwell Plan}**

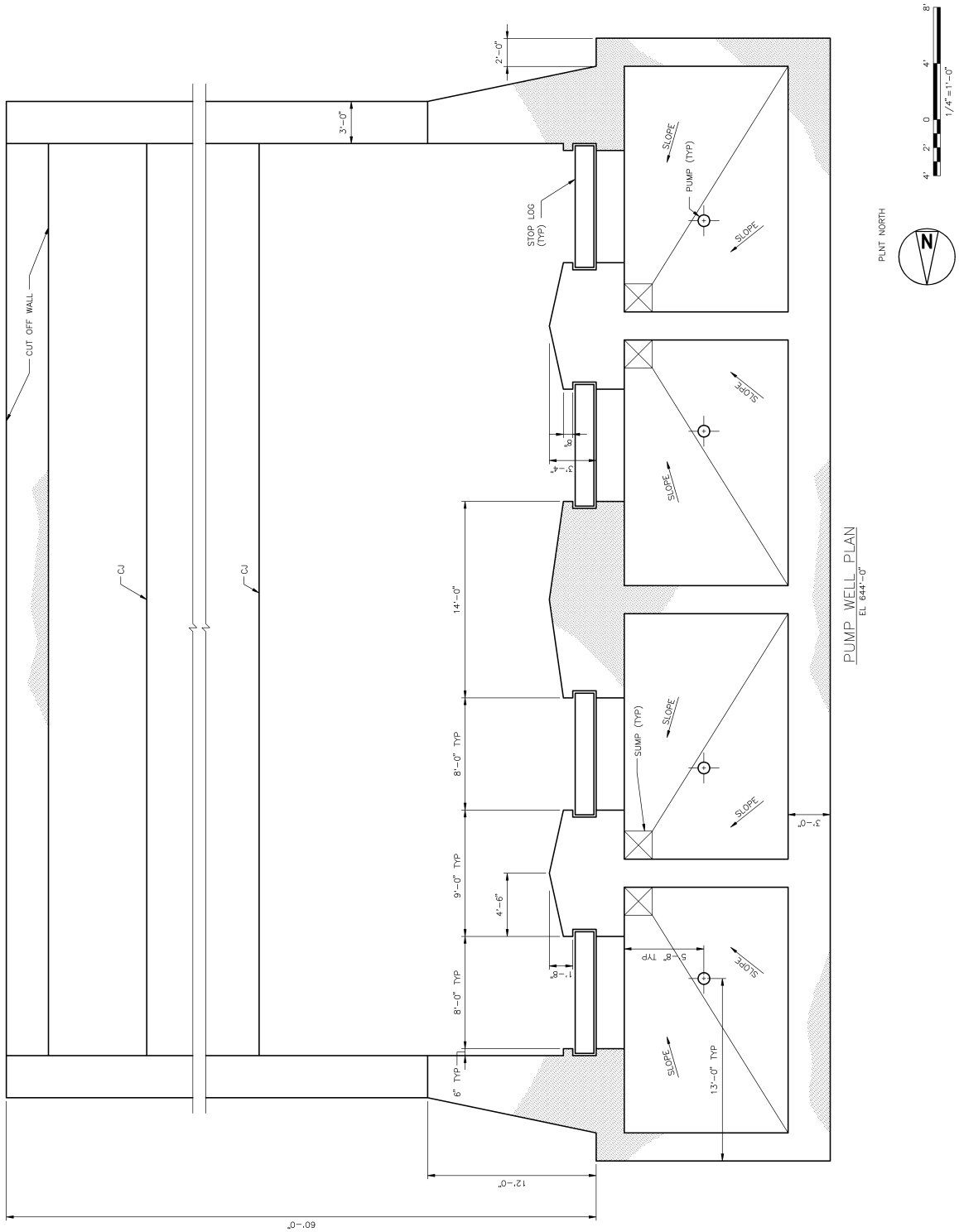



© 2008 UniStar Nuclear Services, LLC. All rights reserved.
COPYRIGHT PROTECTED

**Figure 9.2-9 {Plant Arrangement - ESWEMS Pumphouse Mezzanine Plan}**

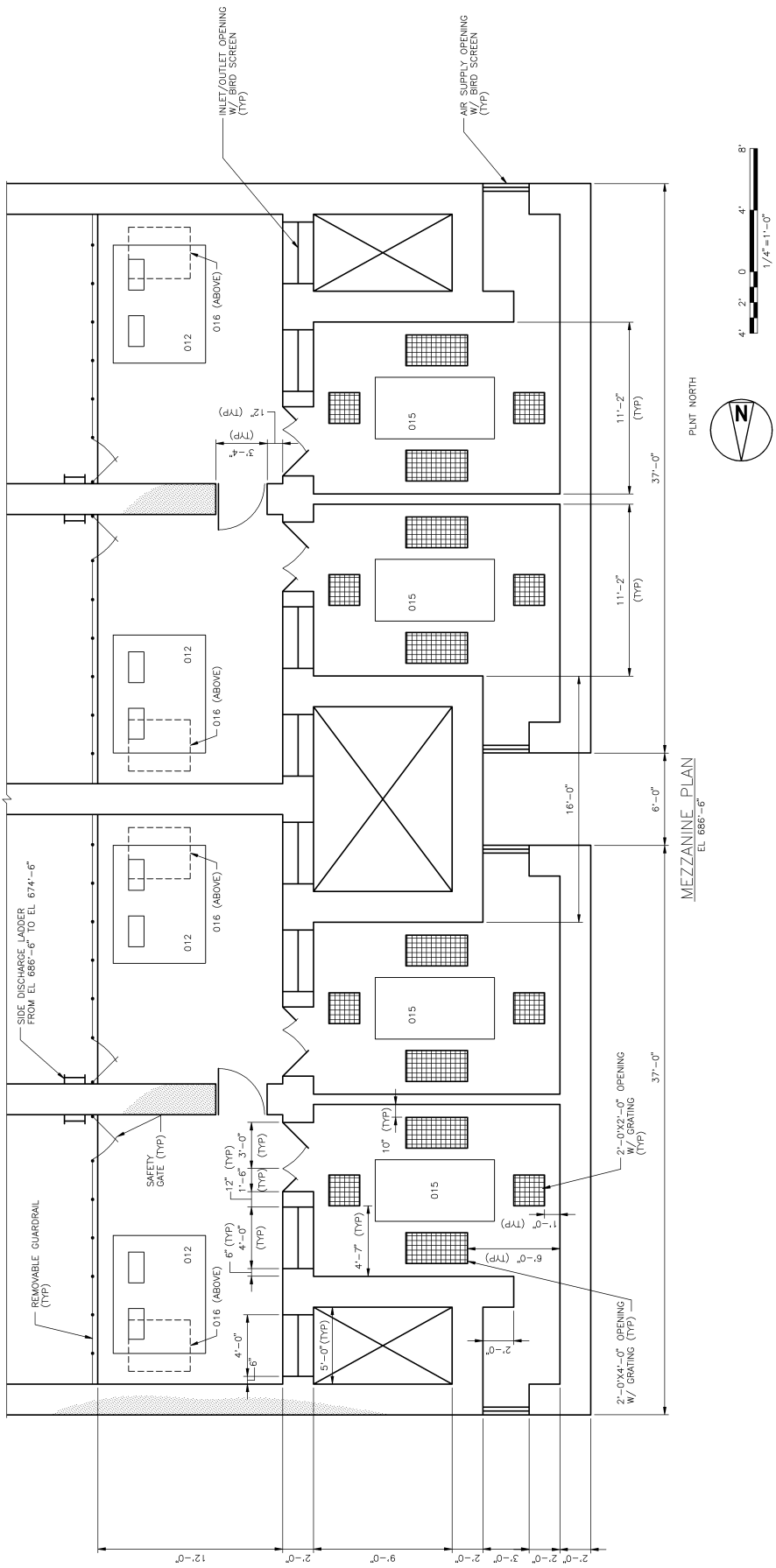



© 2008 UniStar Nuclear Services, LLC. All rights reserved.
COPYRIGHT PROTECTED

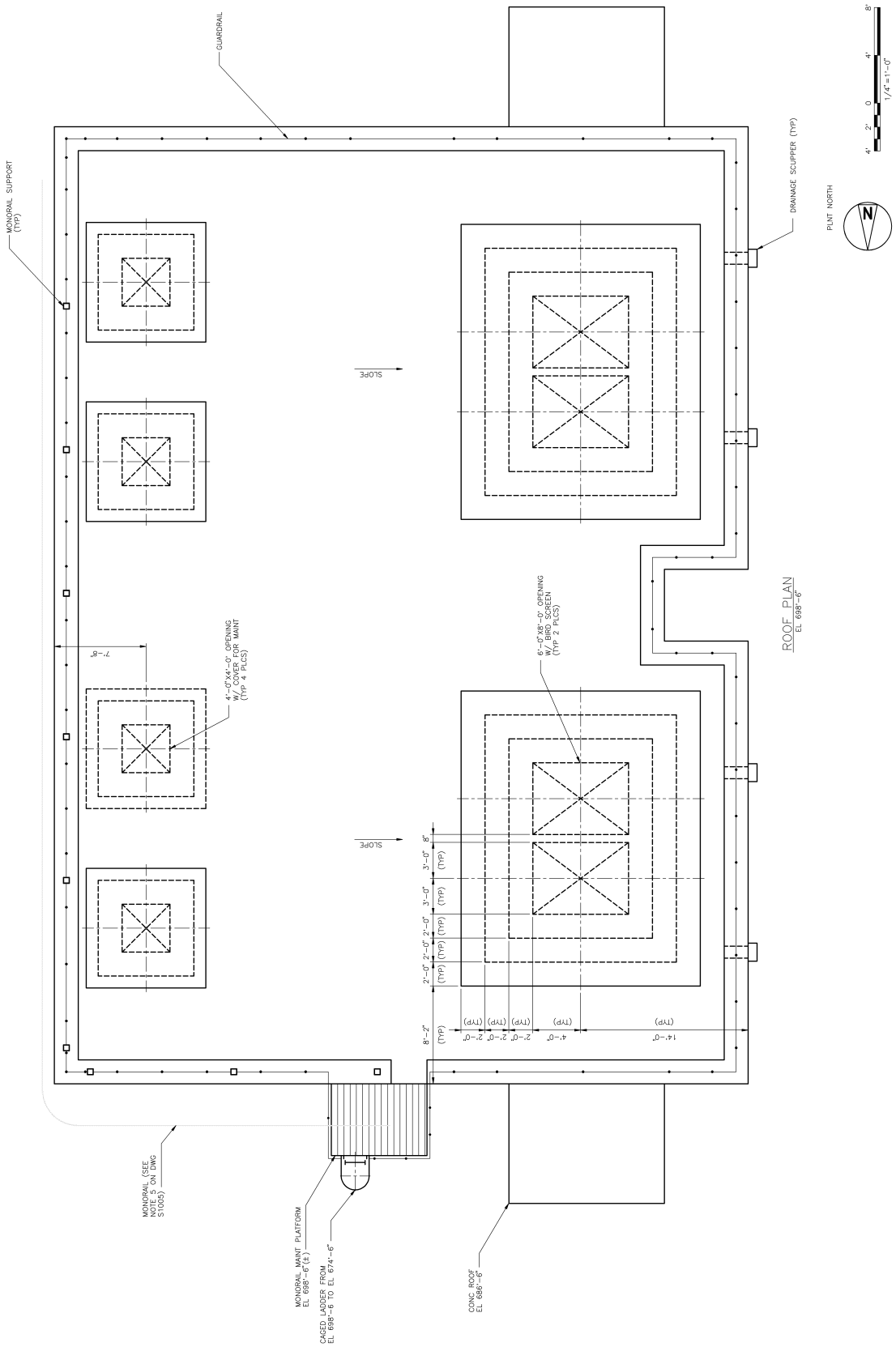


**Figure 9.2-10 {Plant Arrangement - ESWEMS Pumphouse Roof Plan}**


© 2008 UniStar Nuclear Services, LLC. All rights reserved.
COPYRIGHT PROTECTED

**Figure 9.2-11 {Raw Water System}**

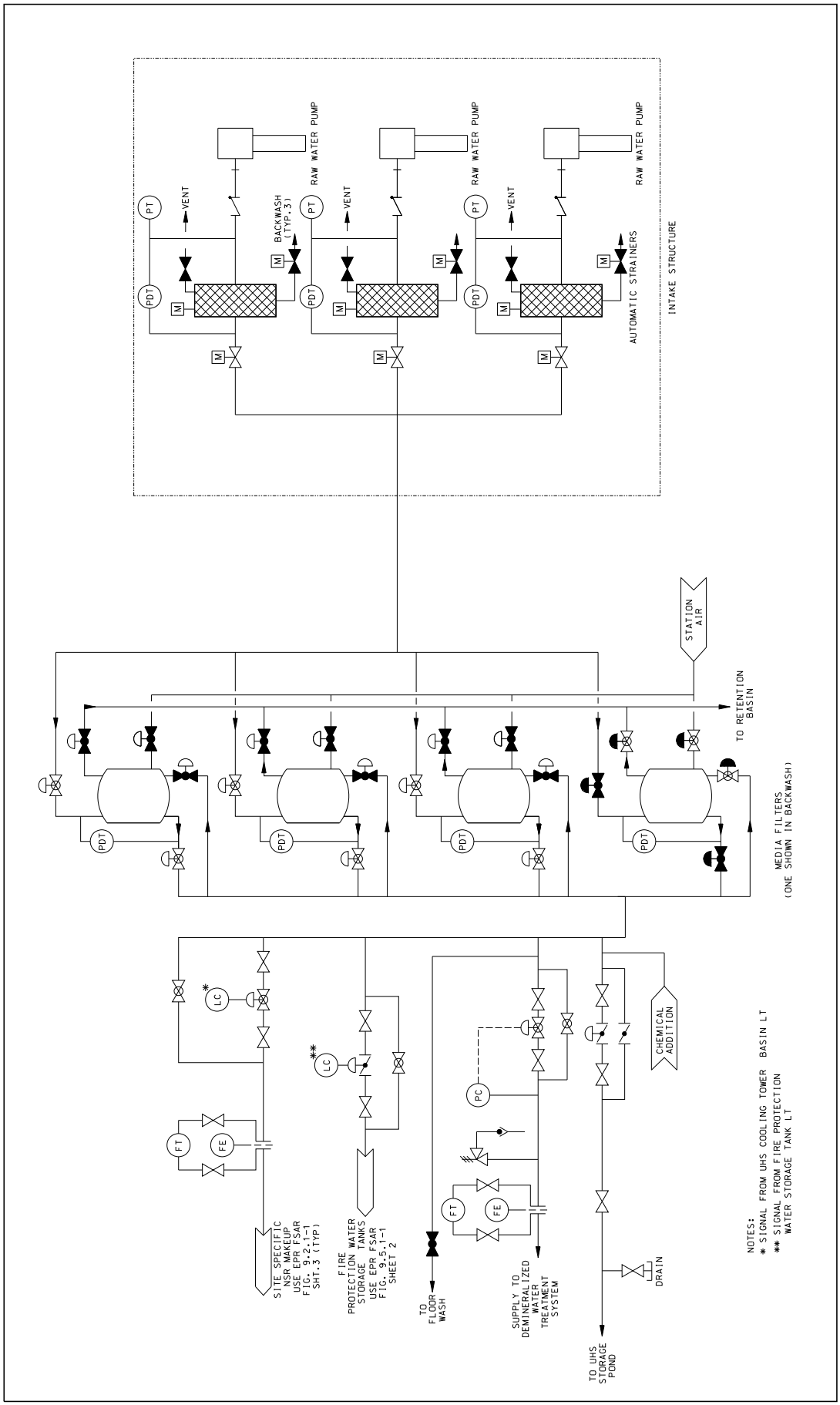



© 2008 UniStar Nuclear Services, LLC. All rights reserved.
COPYRIGHT PROTECTED

## 9.3 PROCESS AUXILIARIES

This section of the U.S. EPR FSAR is incorporated by reference.

## 9.4 AIR CONDITIONING, HEATING, COOLING AND VENTILATION SYSTEMS

This section of the U.S. EPR FSAR is incorporated by reference with the following supplements.

### 9.4.1 MAIN CONTROL ROOM AIR CONDITIONING SYSTEM

No departures or supplements.

#### 9.4.1.1 Design Bases

The U.S. EPR FSAR includes the following conceptual design information in Section 9.4.1.1:

> The CRACS provides adequate protection against radiation [[and hazardous chemical releases]] to permit access to and occupancy of the control room under accident conditions (GDC 19). [[The control room occupancy protection requirements meet the guidance of RG 1.78.]]
>
> The CRACS maintains habitability of the CRE areas during a site radiological contamination event [[or toxic contamination of the environment]] (Refer to Section 6.4).
>
> The CRACS outside air intake is capable of detecting radiation and smoke [[and toxic chemicals]] (see Section 6.4.2.4). Associated monitors actuate alarms in the MCR.
>
> [[Upon actuation of the plant toxic gas alarm signal, the outside air intake dampers close automatically and the CRE air is automatically diverted in the recirculation mode without outside air.]]

This conceptual design information is addressed as follows:

{The evaluation of the BBNPP toxic chemicals in Section 2.2.3 did not identify any credible toxic chemical accidents that exceeded the limits established in Regulatory Guide 1.78 (NRC, 2001). No specific provisions are required to protect the operators from an event involving a release of a toxic gas. As a result, toxic gas detectors and isolation are not required and will not be provided at BBNPP.}

#### 9.4.1.2 System Description

##### 9.4.1.2.1 General Description

The U.S. EPR FSAR includes the following conceptual design information in Section 9.4.1.2.1 and associated Figure 9.4.1-2:

> Sensors on the outside air inlet protect against [[toxic gas (refer to Section 6.4.2.4) and]] radiological intrusion.

The conceptual design information is addressed as follows:

{The evaluation of the BBNPP toxic chemicals in Section 2.2.3 did not identify any credible toxic chemical accidents that exceeded the limits established in Regulatory Guide 1.78 (NRC, 2001).


© 2008 UniStar Nuclear Services, LLC. All rights reserved.
COPYRIGHT PROTECTED

No specific provisions are required to protect the operators from an event involving a release of a toxic gas.}

#### 9.4.1.2.2 Component Description

{The results of the BBNPP toxic chemicals evaluation in Section 2.2.3 did not identify any toxic chemicals that exceeded the limits established in Regulatory Guide 1.78. As a result, toxic gas detectors and isolation are not required and will not be provided at BBNPP.}

#### 9.4.1.2.3 System Operation

The U.S. EPR FSAR includes the following conceptual design information in Section 9.4.1.2.3:

> [[During a toxic gas accident event, the CRACS is placed in full recirculation mode without any outside air makeup (refer to Section 6.4.2.2.]]
>
> *[[Operation During a Toxic Gas Event*
>
> Outside air is continuously monitored for toxic gas by the toxic gas sensors located at the air intakes. Upon detection of a toxic gas condition, audible and visual alarms are actuated in the MCR.]]
>
> *Operation during External Fire, Smoke [[or Toxic Gas Release]]*
>
> In the event of an external fire, [[external toxic gas release,]] smoke, or excessive concentration of CO or $CO_2$, outside air to the CRACS is isolated manually or automatically and the system operates in full recirculation mode without fresh air.

The conceptual design information is addressed as follows:

{The evaluation of the BBNPP toxic chemicals in Section 2.2.3 did not identify any credible toxic chemical accidents that exceeded the limits established in Regulatory Guide 1.78 (NRC, 2001). No specific provisions are required to protect the operators from an event involving a release of a toxic gas.}

### 9.4.1.3 Safety Evaluation

No departures or supplements.

### 9.4.1.4 Inspection and Testing Requirements

No departures or supplements.

### 9.4.1.5 Instrumentation Requirements

No departures or supplements.

### 9.4.1.6 References

{**NRC, 2001**. Evaluating the Habitability of a Nuclear Power Plant Control Room During a Postulated Hazardous Chemical Release, Regulatory Guide 1.78, Revision 1, U. S. Nuclear Regulatory Commission, December 2001.}

## 9.4.2 FUEL BUILDING VENTILATION SYSTEM

No departures or supplements.


© 2008 UniStar Nuclear Services, LLC. All rights reserved.
COPYRIGHT PROTECTED

### 9.4.3 NUCLEAR AUXILIARY BUILDING VENTILATION SYSTEM

No departures or supplements.

### 9.4.4 TURBINE BUILDING VENTILATION SYSTEM

No departures or supplements.

### 9.4.5 SAFEGUARD BUILDING CONTROLLED-AREA VENTILATION SYSTEM

No departures or supplements.

### 9.4.6 ELECTRICAL DIVISION OF SAFEGUARD BUILDING VENTILATION SYSTEM (SBVSE)

No departures or supplements.

### 9.4.7 CONTAINMENT BUILDING VENTILATION SYSTEM

No departures or supplements.

### 9.4.8 RADIOACTIVE WASTE BUILDING VENTILATION SYSTEM

No departures or supplements.

### 9.4.9 EMERGENCY POWER GENERATING BUILDING VENTILATION SYSTEM

No departures or supplements.

### 9.4.10 SWITCHGEAR BUILDING VENTILATION SYSTEM

No departures or supplements.

### 9.4.11 ESSENTIAL SERVICE WATER PUMP BUILDING VENTILATION SYSTEM

No departures or supplements.

### 9.4.12 MAIN STEAM AND FEEDWATER VALVE ROOM VENTILATION SYSTEM

No departures or supplements.

### 9.4.13 SMOKE CONFINEMENT SYSTEM

No departures or supplements.

### 9.4.14 ACCESS BUILDING VENTILATION SYSTEM

No departures or supplements.

### 9.4.15 {ESWEMS PUMPHOUSE HVAC SYSTEM

This section was added as a supplement to the U.S. EPR FSAR.

The ESWEMS Pumphouse consists of four independent ESWEMS pump bays. Each bay houses an ESWEMS pump and the associated equipment and components. The ESWEMS Pumphouse HVAC (Heating, Ventilation and Air Conditioning) System is comprised of four independent heating,ventilation and air conditioning systems, one for each ESWEMS pump bay. Each ESWEMS pump bay's HVAC system is independent and is not connected to any of the other ESWEMS pump bay's HVAC system. The ESWEMS Pumphouse HVAC System provides an environment suitable for the operation of that division's ESWEMS pump (refer to Section 9.2.5).


© 2008 UniStar Nuclear Services, LLC. All rights reserved.
COPYRIGHT PROTECTED

#### 9.4.15.1 Design Bases

The ESWEMS Pumphouse HVAC System includes both Normal (i.e., non safety-related) and Emergency (i.e., safety-related) components, which are described further below. The ESWEMS Pumphouse HVAC Subsystem is safety-related and operates both during normal and the accident conditions to provide suitable environment for personnel access and the pump, pump motor and the associated equipment that are required to operate during the accident conditions. The ESWEMS Pumphouse HVAC Subsystem complies with the general design criteria (GDC) indicated below:

- The ESWEMS Pumphouse HVAC Subsystem maintains acceptable temperature limits to support the operation of the ESWEMS pumps that are required to operate during the design basis accident conditions. The ESWEMS Pumphouse HVAC Subsystem maintains a minimum temperature of 41°F (5°C) and a maximum temperature of 104°F (40°C). This temperature range maintains a mild environment in this building, as defined in U.S. EPR FSAR Section 3.11.
- The ESWEMS Pumphouse HVAC Subsystem and its components are located either outside within the attached missile protected air intake structure, or inside the ESWEMS Pumphouse that is designed to withstand the effects of natural phenomena such as earthquakes, tornadoes, hurricanes, floods and external missiles (GDC 2) (CFR, 2008a).
- The ESWEMS Pumphouse HVAC Subsystem and its components are appropriately protected against the dynamic effects and designed to accommodate the effects of and to be compatible with the environmental conditions associated with normal operation, maintenance, testing and postulated accidents. The components of the ESWEMS Pumphouse HVAC Subsystem remain functional and perform their intended safety functions following a postulated hazard, such as fire, internal missile, or pipe break (GDC 3 and GDC 4) (CFR, 2008b and CFR, 2008c).
- ESWEMS Pumphouse HVAC Subsystem can perform the safety functions, assuming a single active component failure coincident with the loss of offsite power.
- The active components of the ESWEMS Pumphouse HVAC Subsystem are capable of being tested during plant operations.
- The quality group classification of the components of the ESWEMS Pumphouse HVAC System is in accordance with the Regulatory Guide 1.26 (NRC, 2007a) and seismic design of the system components meets the guidance of Regulatory Guide 1.29 (NRC, 2007b).
- The power supply and control functions of the ESWEMS Pumphouse HVAC System are designed in accordance with Regulatory Guide 1.32 (NRC, 2004).

#### 9.4.15.2 System Description

##### 9.4.15.2.1 General Description

The ESWEMS Pumphouse HVAC System is depicted on Figure 9.4-1.

Each division of the ESWEMS Pumphouse HVAC System functions to maintain the temperature in its associated ESWEMS pump bay within the range of minimum and maximum design temperatures during plant normal, abnormal, and accident conditions. Each division of the ESWEMS Pumphouse HVAC System provides the capability to supply outside air to and exhaust from the rooms. Each division also includes four recirculating unit heaters and an Emergency Air Conditioning System. The normal supply air flow path includes a missile


© 2008 UniStar Nuclear Services, LLC. All rights reserved.
COPYRIGHT PROTECTED

protected outside air intake, a safety-related intake damper, a non safety-related recirculation air control damper, a normal supply fan, ductwork, duct accessories and instrumentation and controls. The exhaust air flow path consists of a safety-related exhaust air backdraft damper and a missile protected exhaust air outlet. The Emergency Air Conditioning System consists of an Emergency Air Conditioning (AC) Unit, ductwork, duct accessories and instrumentation and controls.

#### 9.4.15.2.2 Components Description

Each division of the ESWEMS Pumphouse HVAC System contains the following components.

Emergency Air Conditioning (AC) Units

The AC units are safety-related split-system units. The condenser section (i.e., condenser fans, condenser coils, and compressor) is located outdoors inside a missile protected enclosure. The evaporator section (i.e., filters, evaporator coils, and cooling fan) is located inside the pump bay. The AC unit capacities are based on the environmental conditions and the required room temperature range. Fan performance is rated in accordance with ANSI/AMCA-210-1999 (ANSI, 1999), ANSI/AMCA-211-1987 (ANSI, 1987), and ANSI/AMCA-300-1985 (ANSI, 1985).

Ductwork and Accessories

The supply and exhaust air ducts, and the ductwork associated with the Emergency AC Units, are constructed of galvanized steel and are structurally designed for the fan shutoff pressure. The ductwork meets the design, construction, and testing requirements of the applicable portions of ASME AG-1-2003 (ASME, 2003).

Emergency AC Unit Condensation Drain Line

Each AC unit has a drain line installed to collect the condensation that forms in the AC unit and direct the condensation to its respective ESWEMS pumpwell.

Normal Supply Fan

The normal supply fans, which are integral to the air handling units, are centrifugal or axial type with an electrical motor driver. Fan performance is rated in accordance with ANSI/AMCA-210-1999 (ANSI, 1999), ANSI/AMCA-211-1987 (ANSI, 1987), and ANSI/AMCA-300-1985 (ANSI, 1985).

Unit Heaters

Unit Heaters, consisting of fans, thermostats, and electric heating coils, are provided to maintain minimum room temperatures in the ESWEMS Pumphouse rooms at or above the lower design temperature limit of 41°F (5°C) assuming a minimum outside ambient temperature of -21°F (-29 °C). The 4 x 25 kw heaters per room (two safety-related, and two non safety-related) meet the design, construction, and testing requirements of ASME AG-1-2003.

Dampers

A safety-related motor-operated outside air flow control damper and a non safety-related motor-operated flow control recirculation air damper are provided on the suction side of the normal supply fan. A safety-related gravity-actuated exhaust air damper is provided that permits pressurized room air to exhaust to the outside. The dampers meet the design, construction, and testing requirements of the applicable portions of ASME AG-1-2003.


© 2008 UniStar Nuclear Services, LLC. All rights reserved.
COPYRIGHT PROTECTED

#### 9.4.15.2.3 System Operation

Normal Plant Operation

During normal plant operation, the ESWEMS pumps are not in operation, except for the performance of periodic surveillance tests. Each division of the ESWEMS Pumphouse HVAC System functions to maintain the temperature in its associated ESWEMS pump bay within the design limit for starting and operating the ESWEMS pump. Each ESWEMS pump bay temperature is monitored and is indicated locally in the pumphouse. The high and low temperature for each ESWEMS pump bay is annunciated in the main control room.

Abnormal Operating Conditions

The ESWEMS is comprised of four function independent divisions and generally two out four are required for the ESWEMS to perform its funciton. If one division of the ESWEMS Pumphouse HVAC Subsystem fails, the other three divisions of the ESWEMS Pumphouse HVAC Subsystem remain available to support the operation of their associated divisions of the ESWEMS.

Loss of Off-Site Power

In the event of loss of offsite power (LOOP), the ESWEMS Pumphouse HVAC Subsystem will continue to operate as needed. The power to safety-related equipment is supplied from the Class 1E emergency power supply system (EPSS).

Plant Accident Conditions

The ESWEMS Pumphouse HVAC Subsystem is safety-related and is required to operate during design basis accident conditions. The ESWEMS Pumphouse HVAC Subsystem maintains design temperature in each division's ESWEMS pump bay during plant accident conditions.

Smoke Conditions

Smoke detection in the outside air intake or in the Pump Room will automatically trip the normal supply fan and result in closure of both outside air dampers. The Emergency AC Unit is not affected by smoke or fire detection and will operate as required to support operation of the associated makeup pump. The normal supply fan can be used to purge the Pump Room of smoke after a fire by supplying outside air, to be exhausted through the gravity actuated backdraft exhaust damper.

### 9.4.15.3 Safety Evaluation

Below are the safety evaluations that correspond to the safety design bases:

- The ESWEMS Pumphouse HVAC Subsystem has sufficient cooling and heating capacity to maintain each of the ESWEMS pump bays within the design temperature range of 41°F (5°C) to 104°F (40°C) when the outside design temperatures for winter and summer are -21 °F (-6 °C) and 100 °F (38 °C), respectively.
- The ESWEMS Pumphouse HVAC Subsystem is safety-related Seismic Category I and is located inside the ESWEMS Pumphouse that is designed to withstand the effects of earthquakes, tornadoes, hurricanes, floods, external missiles and other appropriate natural events.


© 2008 UniStar Nuclear Services, LLC. All rights reserved.
COPYRIGHT PROTECTED

- If a division of the ESWEMS Pumphouse HVAC Subsystem is not available due to fire, internal missile, or the pipe break then the other three divisions of the ESWEMS Pumphouse HVAC Subsystem remain available to support their division of the ESWEMS.
- If a division of the ESWEMS Pumphouse HVAC Subsystem is inoperable due to failure of an active component coincident with the loss of offsite power, then the other divisions of the ESWEMS Pumphouse HVAC Subsystem remain available to support their division of the ESWEMS. Each division of the ESWEMS Pumphouse HVAC Subsystem is backed up by Class 1E Diesel Power and is available if required.
- The ESWEMS Pumphouse HVAC Systems are initially tested per the program given in Section 14.2.
- The ESWEMS Pumphouse HVAC Subsystem is safety-related. The safety-related components quality group classification, electrical classification and the seismic category are provided in Chapter 3.
- The power supplies to electrical components and the controls for the ESWEMS Pumphouse HVAC Subsystem is from a Class 1E system.

#### 9.4.15.4 Inspection and Testing Requirements

Refer to Section 14.2 for initial plant startup test program. Initial in-place testing of components of the ESWEMS Pumphouse HVAC Subsystem is performed in accordance with ASME AG-1-2003 (ASME, 2003) .

#### 9.4.15.5 Instrumentation Requirements

Instrumentation includes sensing and display of various parameters as necessary to automate system function, and to provide for local and remote system monitoring in the main control room including alarms. These parameters include pumphouse normal supply fan discharge temperature and pumphouse high and low temperature alarms.

#### 9.4.15.6 References

**ANSI, 1985**. Reverberant Room Method for Sound Testing of Fans, ANSI/AMCA-300-1985, American National Standards Institute/Air Movement and Control Association International, Inc.,1985.

**ANSI, 1987**. Certified Ratings Program-Product Rating Manual for Fan Air Performance, ANSI/AMCA-211-1987, American National Standards Institute/Air Movement and Control Association International, Inc.,1987.

**ANSI, 1999**. Laboratory Methods of Testing Fans for Aerodynamic Performance Rating, ANSI/AMCA-210-1999, American National Standards Institute/Air Movement and Control Association International, Inc.,1999.

**ASME, 2003.** Code on Nuclear Air and Gas Treatment, ASME AG-1, American Society of Mechanical Engineers, 2003.

**ASME, 2004.** ASME Boiler and Pressure Vessel Code, Section III, Class 3, 2004 Edition, no Addenda, American Society of Mechanical Engineers, 2004.}

**CFR, 2008a.** Title 10, Part 50, Appendix A, General Design Criterion 2, Design Bases for Protection Against Natural Phenomena, Code of Federal Regulations, 2008.


© 2008 UniStar Nuclear Services, LLC. All rights reserved.
COPYRIGHT PROTECTED

**CFR, 2008b.** Title 10, Part 50, Appendix A, General Design Criterion 3, Fire Protection, Code of Federal Regulations, 2008.

**CFR, 2008c**. Title 10, Part 50, Appendix A, General Design Criterion 4, Environmental and Dynamic Effects Design Bases, Code of Federal Regulations, 2008.

**NRC, 2004.** Regulatory Guide 1.32, Revision 3, Criteria for Power Systems for Nuclear Power Plants, U.S. Nuclear Regulatory Commission, March 2004.

**NRC, 2007a.** Regulatory Guide 1.26, Revision 4, Quality Group Classifications and Standards for Water, Steam, and Radioactive Waste Containing Components of Nuclear Power Plants, U.S. Nuclear Regulatory Commission, March 2007.

**NRC, 2007b.** Regulatory Guide 1.29, Revision 4, Seismic Design Classification, U.S. Nuclear Regulatory Commission, March 2007.}


© 2008 UniStar Nuclear Services, LLC. All rights reserved.
COPYRIGHT PROTECTED

**Figure 9.4-1 {ESWEMS Pumphouse HVAC}**

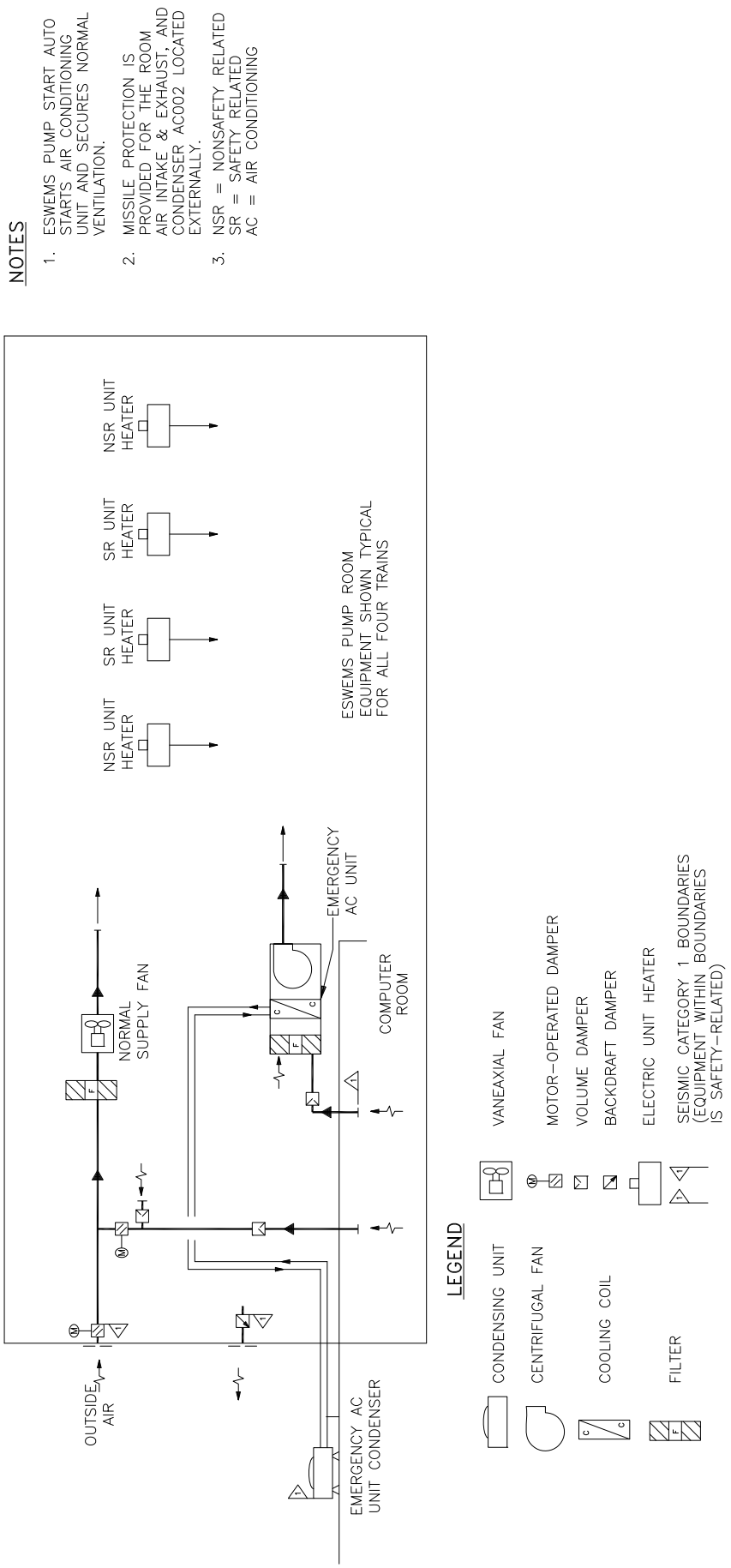



© 2008 UniStar Nuclear Services, LLC. All rights reserved.
COPYRIGHT PROTECTED

**Figure 9.4-2 {ESWEMS Pumphouse HVAC Duct and Instrumentation Diagram}**

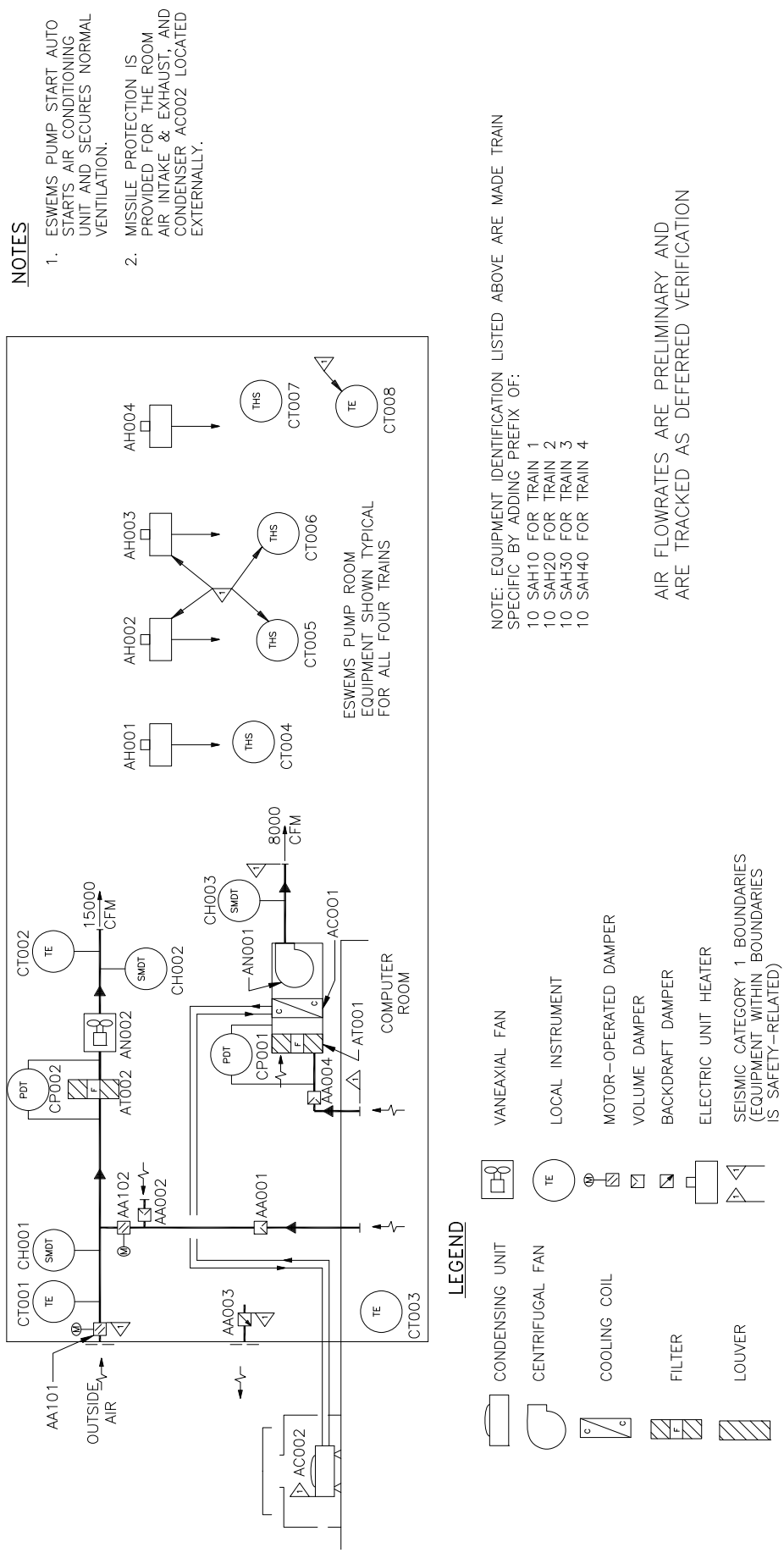



© 2008 UniStar Nuclear Services, LLC. All rights reserved.
COPYRIGHT PROTECTED

## 9.5 OTHER AUXILIARY SYSTEMS

This section of the U.S. EPR FSAR is incorporated by reference with the following supplements.

## 9.5.1 FIRE PROTECTION SYSTEM

No departures or supplements.

### 9.5.1.1 Design Basis

Appendix 9B of this COL FSAR supplements Appendix 9A of the U.S. EPR FSAR.

### 9.5.1.2 System Description

#### 9.5.1.2.1 General Description

For all aspects of the site specific Fire Protection Program (FPP), the same codes and standards and applicable edition years apply for fire protection as listed in Section 9.5.1.7 of the U.S. EPR FSAR.

Table 9.5-1 provides supplemental information for select items/statements in U.S. EPR FSAR Table 9.5.1-1 identified as requiring COL Applicant input. The supplemental information is in a column headed {"BBNPP Supplement"} and addresses {BBNPP} conformance to the identified requirement of Regulatory Guide 1.189 (NRC, 2007).

**Plant Fire Prevention and Control Features**

*Plant Arrangement*

{The site building layout is shown in Figure 2.1-1. An enlargement of the power block area is provided in Figure 2.1-5.} Details of the arrangement of the Turbine Building, Switchgear Building, Auxiliary Power Transformer Area, Generator Transformer Area (the remaining power block structures) and non-power block structures are provided in Appendix 9B of this COL application.

*Architectural and Structural Features*

Details of the architectural/structural design features for the remainder of the power block and balance of plant structures/areas are provided in Appendix 9B of this COL application.

*Electrical System Design and Electrical Separation*

Details of the electrical system design/separation for the remainder of the power block and balance of plant structures/areas are provided in Appendix 9B of this COL application.

*Fire Safe Shutdown Capability*

The remainder of the plant is separated from portions of the facility containing fire safe shutdown systems or components by appropriately rated fire barriers and/or distance. These remaining areas do not contain fire safe shutdown systems or components. This is detailed in Appendix 9B of this COL application.

*Ventilation System Design Considerations*

Details of the ventilation system for the remainder of the power block and balance of plant structures are provided in Appendix 9B of this COL application.

Smoke confinement/smoke control is not provided in other structures/areas of the plant.


© 2008 UniStar Nuclear Services, LLC. All rights reserved.
COPYRIGHT PROTECTED

### *Fire Detection and Alarm System*

Details of the fire detection and alarm system for the remainder of the power block and balance of plant structures are provided in Appendix 9B of this COL application.

### *Fire Water Supply System*

{Suction storage tank makeup is supplied from the Raw Water Supply System which ultimately draws suction from the Susquehanna River. The fire protection water supply is treated to potable quality to help prevent occurrence of biological fouling or corrosion.} The rate of makeup flow to the fire water storage tanks is sufficient to refill the minimum fire protection volume in one tank within eight hours.

In addition, the highest sprinkler system demand is for the Turbine Building and is {2,400 gpm at 161 psig}. The highest standpipe system demand is for the Containment Building and is {1,250 gpm at 176 psig}.

### *Automatic Fire Suppression Systems*

Details of the automatic fire suppression systems for the remainder of the power block and balance of plant structures are provided in Appendix 9B of this COL application.

In addition, automatic sprinkler systems, designed and installed in accordance with National Fire Protection Association (NFPA) 15 (NFPA, 2007a), are provided for the following buildings:

- {Turbine Building under operating deck and skirt areas
- SBO Diesel Tank Rooms
- SBO Auxiliary Equipment Rooms
- Switchgear Building Diesel Engine Rooms
- Auxiliary Boiler Equipment Room
- Warehouse Building
- Central Gas Supply Building
- Fire Protection Building}

Automatic single or double interlock preaction sprinkler systems designed and installed in accordance with NFPA 13 (NFPA, 2007b) are provided in the following areas:

- Turbine Generator and Exciter bearings
- Switchgear Building Cable Spreading Rooms
- Switchgear Building Low- and Medium-Voltage Distribution Board Rooms
- Switchgear Building Cable Distribution Division Rooms
- Switchgear Building Battery Rooms
- Switchgear Building Battery Charger Rooms
- Switchgear Building I&C Control / Protection Panel Rooms

Fixed deluge water spray systems designed and installed in accordance with NFPA 15 are provided for the following hazards.

- Hydrogen seal oil unit


© 2008 UniStar Nuclear Services, LLC. All rights reserved.
COPYRIGHT PROTECTED

- Turbine Building Lube oil drain trenches
- Auxiliary Power Transformers
- Generator Transformers

*Manual Fire Suppression Systems*

Details of the manual fire suppression systems for the remainder of the power block and balance of plant structures are provided in Appendix 9B of this COL application.

#### 9.5.1.3 Safety Evaluation – Fire Protection Analysis

Appendix 9B addresses the fire protection analysis for the remaining power block and balance of plant structures.

In addition, the plant will maintain an integrated fire hazards analysis (FHA) and supporting evaluations that demonstrate that the plant can:

- achieve and maintain post-fire safe shutdown conditions for a fire in any fire area of the plant, including alternative shutdown fire areas,
- maintain safe plant conditions and minimize potential release of radioactive material in the event of a fire during any plant operating mode,
- detail the plant fire prevention, detection, suppression, and containment features, for each fire area containing structures, systems and components (SSCs) important to safety, and
- achieve and maintain these safe conditions with due consideration of plant fire risk as characterized in the plant-specific fire probabilistic risk assessment (Fire PRA).

#### 9.5.1.4 Inspection and Testing Requirements

The FPP includes procedures for testing fire protection features and systems and includes criteria to ensure design and system readiness. This includes installation and acceptance testing, periodic testing, quality assurance oversight of testing, and proper test documentation.

All fire protection features and systems will be surveilled, inspected, tested, and maintained in accordance with applicable codes and standards of the NFPA including start-up and acceptance tests. The frequency of follow-up inspections and tests will also follow NFPA requirements and ALARA guidelines.

All surveillance, inspection, testing and maintenance is conducted and documented in accordance with approved plant procedures and is performed by qualified personnel.

#### 9.5.1.5 Fire Probabilistic Risk Assessment

No departures or supplements.

#### 9.5.1.6 Fire Protection Program

No departures or supplements.


© 2008 UniStar Nuclear Services, LLC. All rights reserved.
COPYRIGHT PROTECTED

#### 9.5.1.6.1 Fire Prevention

Governance and control of FPP attributes is provided through policies, procedures, and the {PPL Bell Bend} Quality Assurance Program Description. Procedures are in place for FPP impacting activities including:

- In-situ and transient combustibles.
- Ignition sources.
- Hot Work.
- Annunciator response and pre-fire plans.
- Surveillance, inspection, testing, and maintenance (as applicable) of:
  - Passive fire barriers including opening protectives (i.e., fire doors, fire dampers, and through penetration seal systems).
  - Fire protection water supply system.
  - Automatic and manual fire suppression systems and equipment.
  - Automatic and manual fire detection/fire alarm system equipment.
  - Fire brigade and fire response equipment.

#### 9.5.1.6.2 Fire Protection Program

The FPP organization is shown in Figure 9.5-1. The ultimate responsibility for the FPP rests with the {Chief Nuclear Officer}. The responsibilities, lines of authority, training and qualifications by title/position are detailed in administrative procedures and the {PPL Bell Bend} Quality Assurance Program Description. Key positions are described below. The qualifications required for key positions are provided in Section 9.5.1.6.3.

The {Onsite Engineering Manager} has the overall responsibility for development and ongoing assessment of the FPP. A qualified fire protection engineer (FPE) is delegated the responsibility to administer and implement the FPP through procedures governing fire prevention, combustible material control, ignition source control, automatic and manual fire suppression systems, manual fire response equipment, evaluation of work for impact on the FPP, pre-fire planning, and identification of fire protection training requirements for plant personnel including general employees, fire brigade, and contract employees/contractors. The FPE is assisted through the assignment of responsibility for individual portions of the FPP to various departments as defined in administrative procedures.

The {Operations Shift Supervisor} has the responsibility for ensuring that fire safety and administration of applicable fire protection controls are maintained for all modes of plant operation. In the event of a fire in the plant, the {Operations Shift Supervisor} is the incident command authority for coordinating fire response and plant operational/shutdown activities unless and until relieved under the Emergency Plan.

Quality assurance oversight of the FPP rests with the Quality and Performance Improvement organization in accordance with the {PPL Bell Bend} Quality Assurance Program Description.


© 2008 UniStar Nuclear Services, LLC. All rights reserved.
COPYRIGHT PROTECTED

#### 9.5.1.6.3 Fire Protection Training and Personnel Qualifications

**Fire Protection Engineer**

No departures or supplements.

**Fire Brigade Members**

No departures or supplements.

**Fire Protection System Operation, Testing, and Maintenance**

Personnel who perform operation of or surveillance, inspection, test, and/or maintenance activities on fire-protection related structures, systems, or components are trained in the specific activities they are required to perform. Training is conducted through one or more of the following: factory or shop training on individual equipment, recognized apprentice and/or journeyman training courses, training coursework on equipment of similar type or experience-based training and qualification on fire systems in general. All personnel who perform fire protection related maintenance will be trained in conformance to plant procedures and in fire protection feature/system impairment procedures.

**Training of the Fire Brigade**

No departures or supplements.

**General Employee Training**

This training is required for all personnel who are granted unescorted plant access. General employee training curriculum provides an overview of the requirements of the FPP including: general fire hazards within the plant, the defense-in-depth objectives of the FPP, and an introduction to the FPP procedures that govern employee actions including appropriate steps to be taken upon discovering a significant fire hazard, actions to be taken upon discovering a fire or hearing/seeing a fire alarm, and combustible material and ignition source controls.

**Fire Watch Training**

*Fire Watch – Hot Work*

This training is required for all plant and/or contract personnel assigned duties as a fire watch for hot work. Hot work fire watch training includes training on hot work permitting, hot worker safety, requirements for inspection and authorization for hot work, emergency communication/notification, transfer of fire watch responsibilities, post-work inspection requirements, and hot work recordkeeping requirements. All fire watches are trained in the selection, limitations, and use/application of hand portable fire extinguishers.

*Fire Watch – Compensatory Measures*

This training is required for all plant and/or contract personnel assigned duties as a fire watch compensating for the inoperability or impairment of a given fire protection system or feature. Compensatory measure fire watch training includes training on impairment procedures, safety functions of fire protection related systems and features and how these functions are degraded, plant features typically being compensated for, emergency communication/ notification, transfer of fire watch responsibilities, restoration from compensatory fire watch, and recordkeeping requirements. All compensatory measure fire watches are trained in the selection, limitations, and use/application of hand portable fire extinguishers.


© 2008 UniStar Nuclear Services, LLC. All rights reserved.
COPYRIGHT PROTECTED

#### 9.5.1.6.4 Fire Brigade Organization, Training, and Records

Fire Brigade equipment including personal protective equipment for structural firefighting is provided for the plant fire brigade. Each fire brigade member is equipped with a helmet (with face shield), turnout coat, turnout pants, footwear, gloves, protective hood, personal alert safety system (PASS) device, and self-contained breathing apparatus (SCBA). All equipment will conform to appropriate NFPA standards. The plant maintains an adequate inventory of firefighting equipment to ensure outfitting of a full complement of brigade members with consideration of the possibility of sustained fire response operations (multiple crews).

SCBAs are required to be worn for interior fire response activities and at similar times when fire/response activities may involve a risk of chemical, particulate, and/or radiological material inhalation exposure.

Other types of fire response equipment are distributed and/or cached at various locations throughout the plant to support response by the plant fire brigade and/or off-site response agencies. The types of equipment provided include fire hose (2-1/2 and 1-1/2 inch diameter), combination and specialty hose nozzles, portable smoke removal equipment, spill control and absorbent materials, supplemental hand portable fire extinguishers, aqueous film-forming foam (AFFF) supply and foam eductors, and other specialty tools.

The plant has procedural controls in place to govern the response to fires. This includes fire annunciator response procedures and pre-fire plans which provide direction for the Control Room to determine: the need to initiate plant safe shutdown, the actions to take to effect shutdown, the mobilization and response of Control Room operators, and the mobilization and response of the plant Fire Brigade to effect fire-fighting activities. These procedures are utilized, in conjunction with the Emergency Plan, to determine when conditions necessitate:

- Requesting support of off-site emergency response resources.
- The declaration and escalation of the fire occurrence as a plant emergency.
- The notification of local, state, and federal governmental agencies.

#### 9.5.1.6.5 Quality Assurance

The {PPL Bell Bend} Quality Assurance Program Description has appropriate provisions to govern the quality attributes of the FPP. The FPP conforms to the applicable provisions of 10 CFR 50, Appendix B (CFR, 2008) and with the quality assurance guidance in Regulatory Guide 1.189 (NRC, 2007).

Audits of the FPP will be performed at the recommended frequencies by an audit team staffed and led by qualified QA and technical auditors.

Additional details of the quality assurance program are provided in Section 17.5.

### 9.5.1.7 References

{**CFR, 2008a**. Quality Assurance Criteria for Nuclear Power Plants and Fuel Reprocessing Plants, Title 10, Code of Federal Regulations, Part 50, Appendix B, U.S. Nuclear Regulatory Commission, 2008.

**NFPA, 2007a**. Standard for Water Spray Fixed Systems for Fire Protection, NFPA 15, National Fire Protection Association, 2007.


© 2008 UniStar Nuclear Services, LLC. All rights reserved.
COPYRIGHT PROTECTED

**NFPA, 2007b**. Standard for the Installation of Sprinkler Systems, NFPA 13, National Fire Protection Association, 2007.

**NRC, 2007**. Fire Protection for Nuclear Power Plants, Revision 1, Regulatory Guide 1.189, Revision 1, U. S. Nuclear Regulatory Commission, March 2007.}

## 9.5.2 COMMUNICATION SYSTEM

No departures or supplements.

### 9.5.2.1 Design Basis

No departures or supplements.

### 9.5.2.2 System Description

No departures or supplements.

### 9.5.2.3 System Operation Communications Stations

The U. S. EPR FSAR includes the following COL Item in Section 9.5.2.3:

> The COL applicant referencing the U.S. EPR certified design will identify additional site-specific communication locations necessary to support effective communication between plant personnel in all vital areas of the plant during normal operation, as well as during accident conditions.

This COL Item is addressed as follows:

{The ESWEMS Pumphouse contains safety-related equipment and is a site-specific vital area of the plant. Communication equipment will be provided in this area to support effective communication between plant personnel during normal operation, as well as during accident conditions. This location will contain equipment to allow use of the plant digital telephone system, PA and alarm system, and sound powered system. A portable wireless communication system will also be provided for use by fire brigade and other operations personnel required to achieve safe plant shutdown.

All the communication subsystems are available for use during normal operation of the plant. Except for the sound-powered system, the communication subsystems are powered from the Class 1E Emergency Uninterruptible Power Supply System (EUPS) or the Class 1E Emergency Power Supply System (EPSS), which are supported by the emergency and station blackout diesel generators to provide backup power. Hence all the communication subsystems are expected to be available for use during all accident conditions. However, all communications equipment is categorized as non safety-related, and is not relied upon to mitigate an accident. The sound-powered system does not require an external power source.}

### 9.5.2.4 Inspection and Testing Requirements

No departures or supplements.

### 9.5.2.5 References

No departures or supplements.


© 2008 UniStar Nuclear Services, LLC. All rights reserved.
COPYRIGHT PROTECTED

### 9.5.3 LIGHTING SYSTEM

No departures or supplements.

### 9.5.4 DIESEL GENERATOR FUEL OIL STORAGE AND TRANSFER SYSTEM

No departures or supplements.

### 9.5.5 DIESEL GENERATOR COOLING WATER SYSTEM

No departures or supplements.

### 9.5.6 DIESEL GENERATOR STARTING AIR SYSTEM

No departures or supplements.

### 9.5.7 DIESEL GENERATOR LUBRICATING SYSTEM

No departures or supplements.

### 9.5.8 DIESEL GENERATOR AIR INTAKE AND EXHAUST SYSTEM

No departures or supplements.


© 2008 UniStar Nuclear Services, LLC. All rights reserved.
COPYRIGHT PROTECTED

**Table 9.5-1 {Fire Protection Program Compliance with Regulatory Guide 1.189}**
(Page 1 of 8)

| R.G. Section | Regulatory Guide 1.189 "C. Regulatory Position"[1] | Compliance[2] | U.S. EPR Comment | BBNPP Supplement |
|---|---|---|---|---|
| C.1 | Fire Protection Program | Compliance | | The Fire Protection Program (FPP) is consistent with the requirements of Regulatory Guide 1.189 and SRP 9.5-1. Details of the FPP are provided in this COL application. |
| C.1.1 | Organization, Staffing, and Responsibilities | Compliance | | The FPP organization is shown in Figure 9.5-1. The responsibilities, lines of authority, training and qualifications by title/position are detailed in administrative procedures and the Quality Assurance Program Description. |
| C.1.2 | Fire Hazards Analysis | Compliance | See Fire Protection Analysis Appendix 9A | Appendix 9A of the U.S. EPR FSAR provides the technical analysis for the nuclear island and demonstrates that the EPR has the ability to achieve and maintain safe-shutdown and to minimize the release of radioactive materials to the environment. Appendix 9B is an analysis detailing fire hazards and fire protection attributes for the remainder of the plant. Other structures not listed will be confirmed as not posing fire/explosion risk to the plant using NFPA 80A criteria. |
| C1.3 | Safe Shutdown Analysis | Compliance | | The plant will develop and maintain an integrated, detailed site-specific FHA and will have detailed procedures and training to ensure fire-safe shutdown and other fire safe conditions required to minimize radioactive material release are achieved and maintained. |
| C.1.4 | Fire Test Reports and Fire Data | Compliance | | If untested barrier configurations are determined necessary during detailed design, they will be evaluated consistent with RG 1.189 requirements. |
| C.1.5 | Compensatory Measures | Compliance | | The FPP will apply compensatory measures consistent with RG 1.189 recommendations and standard industry practice whenever fire protection features are degraded and/or inoperable. Compensatory measures will be applied when necessary to accomplish repair or modification or as a result of findings during inspection or surveillance. Fire watches, temporary fire barriers, or backup suppression capability will be implemented, as applicable. Where an uncommon type of compensatory measure is warranted, an evaluation of the alternative will be conducted prior to implementation. Such evaluation will incorporate fire risk insights as applicable. |
| C.1.6 | Fire Protection Training and Qualifications | Compliance | | The FPP Organization is shown in Figure 9.5-1. |
| C.1.6.1 | Fire Protection Staff Training and Qualifications | Compliance | | The responsibilities, lines of authority, training and qualifications by title/position are detailed in administrative procedures and the Quality Assurance Program Description. |


© 2008 UniStar Nuclear Services, LLC. All rights reserved.
COPYRIGHT PROTECTED

**Table 9.5-1 {Fire Protection Program Compliance with Regulatory Guide 1.189}**
(Page 2 of 8)

| R.G. Section | Regulatory Guide 1.189 "C. Regulatory Position"[1] | Compliance[2] | U.S. EPR Comment | BBNPP Supplement |
|---|---|---|---|---|
| C.1.6.2 | General Employee Training | Compliance | | General employee training includes instruction on actions to take upon discovery of a fire, hearing a fire alarm, and proper fire preventative and protective administrative controls and actions. |
| C.1.6.3 | Fire Watch Training | Compliance | | Fire watch training includes instruction on responsibilities, actions, and records for oversight of hot work and when serving as compensatory measure for degraded fire protection feature. |
| C.1.6.4 | Fire Brigade Training and Qualifications | Compliance | | The fire brigade will have at least five members available on each shift above the minimum shift complement for safe operation/shutdown. The brigade is trained and equipped to respond to fire-related emergencies. |
| C.1.6.4.1 | Qualifications | Compliance | | The fire brigade will be under the direction of the Shift Supervisor. A Fire Brigade Leader is assigned and qualified to command response to fire emergencies. A minimum of three operations staff members including one licensed operator will be assigned to the shift fire brigade. Fire brigade members are required to be physically fit and undergo an annual physical examination for initial and continuing brigade membership. |
| C.1.6.4.2 | Instruction | Compliance | | Fire brigade members are trained in nuclear facility fire response strategy and tactics by qualified trainers using both classroom and hands-on instruction. The training curriculum is detailed in an administrative procedure. Refresher training is structured to ensure that the entire curriculum is repeated every two years. |
| C.1.6.4.3 | Fire Brigade Practice | Compliance | | Brigade practice sessions are scheduled to ensure that each member attends at least one session per year. |
| C.1.6.4.4 | Fire Brigade Training Records | Compliance | | Brigade training records will be retained for a minimum of three years. |
| C.1.7 | Quality Assurance | Compliance | | The Quality Assurance Program Description Section V has appropriate provisions to govern the quality attributes of the fire protection program. The FPP conforms to the applicable provisions of 10 CFR 50, Appendix B and with the quality assurance guidance in RG 1.189. |
| C.1.7.1 | Design and Procurement Document Control | COL Applicant | Note 3 | Design and Procurement Document Control shall be in accordance with Section V of the Quality Assurance Program Description. Fire protection quality requirements are included in plant configuration control processes. |


© 2008 UniStar Nuclear Services, LLC. All rights reserved.
COPYRIGHT PROTECTED

**Table 9.5-1 {Fire Protection Program Compliance with Regulatory Guide 1.189}**
(Page 3 of 8)

| R.G. Section | Regulatory Guide 1.189 "C. Regulatory Position"[1] | Compliance[2] | U.S. EPR Comment | BBNPP Supplement |
|---|---|---|---|---|
| C.1.7.2 | Instructions, Procedures, and Drawings | COL Applicant | Note 3 | The FPP provides instruction and procedures to control fire prevention and firefighting; design, installation, inspection, test, maintenance and modification of fire protection features/systems; and appropriate administrative controls in accordance with Section V of the Quality Assurance Program Description. |
| C.1.7.3 | Control of Purchased Material, Equipment, and Services | COL Applicant | Note 3 | The FPP provides procedures to control procurement of fire protection related items to ensure proper evidence of quality in accordance with Section V of the Quality Assurance Program Description. |
| C.1.7.4 | Inspection | Compliance | | The FPP includes procedures for independent inspection of fire protection-related activities including installation and/or maintenance of features including FP systems, emergency lighting and communication, cable routing, and fire barriers and opening protectives in accordance with Section V of the Quality Assurance Program Description. |
| C.1.7.5 | Test and Test Control | Compliance | | The FPP includes procedures for testing fire protection features and systems and includes criteria to ensure design and system readiness. This includes installation and acceptance testing, periodic testing, quality assurance oversight of testing, and proper test documentation in accordance with Section V of the Quality Assurance Program Description. |
| C.1.7.6 | Inspection, Test, and Operating Status | Compliance | | Fire protection features and systems are provided with suitable marking and labeling to indicate acceptance and readiness for operation in accordance with Section V of the Quality Assurance Program Description. |
| C.1.7.7 | Non-conforming Items | Compliance | | The FPP includes procedures for identification and control of items that do not conform to specified requirements, are inoperable or otherwise unsuitable. This includes tagging or labeling, notification and dispositioning of the nonconforming item in accordance with Section V of the Quality Assurance Program Description. |
| C.1.7.8 | Corrective Action | Compliance | | The plant has an administrative procedure to ensure that proper corrective actions are taken for conditions adverse to fire protection including root cause analysis when appropriate in accordance with Section V of the Quality Assurance Program Description. |
| C.1.7.9 | Records | Compliance | | The FPP includes provisions for preparing and maintaining retrievable records that demonstrate conformance to fire protection requirements in accordance with Section V of the Quality Assurance Program Description. |


© 2008 UniStar Nuclear Services, LLC. All rights reserved.
COPYRIGHT PROTECTED

**Table 9.5-1 {Fire Protection Program Compliance with Regulatory Guide 1.189}**
(Page 4 of 8)

| R.G. Section | Regulatory Guide 1.189 "C. Regulatory Position"[1] | Compliance[2] | U.S. EPR Comment | BBNPP Supplement |
|---|---|---|---|---|
| C.1.7.10 | Audits | Compliance | | The FPP requires that audits be performed at the appropriate periodicity by qualified fire protection and QA personnel to verify that the program is being properly implemented and that compliance to fire protection requirements is being met in accordance with Section V of the Quality Assurance Program Description. |
| C.1.7.10.1 | Annual Fire Protection Audit | Compliance | | An annual audit will be performed consistent with R.G. 1.189. |
| C.1.7.10.2 | 24-Month Fire Protection Audit | Compliance | | A biennial audit will be performed consistent with R.G. 1.189 and Section V of the Quality Assurance Program Description. |
| C.1.7.10.3 | Triennial Fire Protection Audit | Compliance | | A triennial audit will be performed consistent with R.G. 1.189 and Section V of the Quality Assurance Program Description. Independent auditors will be used to perform triennial audits. |
| C.1.8 | Fire Protection Program Changes/ Code Deviations | COL Applicant | Note 3 | Compliance - If program changes or deviations are required, the plant will use risk-informed, performance-based methodologies consistent with R.G. 1.174 to evaluate and justify changes/ deviations. |
| C.1.8.1 | Change Evaluations | COL Applicant | Note 3 | Compliance - FPP program changes will be evaluated consistent with 10 CFR 50.59 and the applicable change processes in 10 CFR 52. |
| C.1.8.5 | 10 CFR 50.72 Notification and 10 CFR 50.73 Report | COL Applicant | Note 3 | Compliance - the plant will report fire events and any fire protection program deficiencies consistent with 10 CFR 50.72 and 10 CFR 50.73. |
| C.1.8.7 | Fire Modeling | COL Applicant | Note 3 | Compliance - If fire models are used to evaluate changes, the plant will apply models consistent with R.G. 1.189 including limitations on their use and adequate verification and validation (as required). |
| C.2 | Fire Prevention | Compliance | | The FPP includes procedures to ensure minimization of fire hazards in areas important to safety for anticipated operating conditions and to ensure fire safety as part of facility modifications. |
| C.2.1 | Control of Combustibles | Compliance | | The FPP includes procedures to control transient combustibles consistent with the Fire Hazards Analysis and good fire prevention practices. |
| C.2.1.1 | Transient Fire Hazards | Compliance | | The FPP includes procedures to control transient combustibles consistent with the Fire Hazards Analysis and good fire prevention practices. |
| C.2.1.2 | Modifications | Compliance | | The FPP includes procedures to ensure that fire prevention and fire safety practices are maintained and that the facility fire safety design basis is not negatively impacted. |
| C.2.1.3 | Flammable and Combustible Liquids and Gases | Compliance | | The FPP includes procedures to ensure flammable and combustible liquids and gases are handled properly and consistent with the facility design basis. |


© 2008 UniStar Nuclear Services, LLC. All rights reserved.
COPYRIGHT PROTECTED

**Table 9.5-1 {Fire Protection Program Compliance with Regulatory Guide 1.189}**
(Page 5 of 8)

| R.G. Section | Regulatory Guide 1.189 "C. Regulatory Position"[1] | Compliance[2] | U.S. EPR Comment | BBNPP Supplement |
|---|---|---|---|---|
| C.2.1.4 | External/Exposure Fire Hazards | Compliance | | The FPP includes procedures to ensure that any adjacent or external facilities to areas important to safety are evaluated consistent with NFPA 80A and for impact on the facility Fire Hazards Analysis. |
| C.2.2 | Control of Ignition Sources | Compliance | | The FPP includes procedures for control of ignition sources. The facility design follows recognized codes, standards, and practices to minimize ignition hazards. |
| C.2.2.1 | Open Flame, Welding, Cutting, and Grinding (Hot Work) | Compliance | | The FPP includes procedures for issuance of hot work permits and to control the designation of fixed weld shop areas or similar. |
| C.2.2.2 | Temporary Electrical Installations | Compliance | | The FPP includes procedures to monitor and control the use of temporary electrical installations for routine and outage related maintenance consistent with recognized standards and practices. |
| C.2.2.3 | Other Sources | Compliance | | The FPP includes procedures to monitor and control other non-routine ignition hazards such as temporary heating, leak testing, tar kettles, heat guns, and similar devices/operations. |
| C.2.3 | Housekeeping | Compliance | | The FPP includes procedures for routine housekeeping and monitoring areas important to safety for prompt removal of combustibles. |
| C.2.4 | Fire Protection System Maintenance and Impairments | Compliance | | The FPP includes procedures to ensure fire protection features and systems are maintained in accordance with applicable reference standards and other regulatory guidance. Fire system and feature impairments are controlled by a permit system authorized by a qualified individual. |
| C.3.5 | Manual Firefighting Capabilities | Compliance | | See below |
| C.3.5.1 | Fire Brigade | Compliance | | The Fire Brigade consists of at least five members available on each shift above the minimum shift complement for safe operation/shutdown. The brigade is trained and equipped to respond to fire-related emergencies. |
| C.3.5.1.1 | Fire Brigade Staffing | Compliance | | The Fire Brigade consists of at least five members available on each shift above the minimum shift complement for safe operation/shutdown. The on-duty Shift Supervisor is not a member of the fire brigade. |
| C.3.5.1.2 | Equipment | Compliance | | The Fire Brigade is suitably outfitted and equipped for interior structural firefighting activities. PPE and related fire brigade equipment conforms with and is maintained per recognized standards. This includes turnout gear and self-contained breathing apparatus and equipment including hoses, nozzles, smoke ejectors, and other specialized equipment. Equipment maintenance and inspection is performed per plant procedure. |


© 2008 UniStar Nuclear Services, LLC. All rights reserved.
COPYRIGHT PROTECTED

**Table 9.5-1 {Fire Protection Program Compliance with Regulatory Guide 1.189}**
(Page 6 of 8)

| R.G. Section | Regulatory Guide 1.189 "C. Regulatory Position"[1] | Compliance[2] | U.S. EPR Comment | BBNPP Supplement |
|---|---|---|---|---|
| C.3.5.1.3 | Procedures and Prefire Plans | Compliance | | The Fire Brigade and fire response activities are conducted in accordance with annunciator response procedures, pre-fire plans, and related fire response procedures which address strategies and tactics typical to nuclear power plant fire response. |
| C.3.5.1.4 | Performance Assessment/Drill Criteria | Compliance | | The Fire Brigade will drill at least quarterly. At least one annual drill will be unannounced and one drill will be on a back shift. Drills will be scheduled to ensure that all brigade members participate in minimum of two drills per year. Drills are based on prepared drill and tabletop guides and will be critiqued by knowledgeable plant staff to ensure that fire response objectives are being met. An independent reviewer will be included at least once every three years. |
| C.3.5.2 | Offsite Manual Firefighting Resources | Compliance | | Offsite fire department response is governed through a mutual aid agreement with offsite fire departments. The offsite fire departments are included in pertinent training on the hazards of the facility and participate in a minimum of one drill per year on-site. |
| C.3.5.2.1 | Capabilities | Compliance | | The offsite fire department equipment is compatible with the plant equipment and/or adapters are provided and available when required. |
| C.3.5.2.2 | Training | Compliance | | The offsite fire departments are included in pertinent training on the hazards of and response within the facility including radiological and operational hazards; site access/ security; and roles, responsibilities and authorities including command and response structure. |
| C.3.5.2.3 | Agreement/Plant Exercise | Compliance | | The plant will establish written mutual aid agreements with off-site fire departments to provide response support to the fire brigade. Said agreements will address authorities and command responsibilities and will provide for periodic participation/joint training including annual drills and participation in radiological emergency response plan exercises. |
| C.4.1.7 | Communications | Compliance | | The Fire Brigade will utilize portable radios for communications during fire response. This system is arranged to not conflict with other site radio communications and to provide reliable, comprehensive coverage for the site.<br>The radio system is the primary means of communication for fire brigade operations. Secondary communications are available to the fire brigade via the plant primary and wireless telephone systems and by the plant public address system. |


© 2008 UniStar Nuclear Services, LLC. All rights reserved.
COPYRIGHT PROTECTED

**Table 9.5-1 {Fire Protection Program Compliance with Regulatory Guide 1.189}**
(Page 7 of 8)

| R.G. Section | Regulatory Guide 1.189 "C. Regulatory Position"[1] | Compliance[2] | U.S. EPR Comment | BBNPP Supplement |
|---|---|---|---|---|
| C.5.5 | Post-Fire Safe-Shutdown Procedures | COL Applicant | Note 3 | Compliance - The plant will have detailed procedures and training to ensure fire-safe shutdown and other fire-safe conditions required to minimize radioactive material release are achieved and maintained. |
| C.5.5.1 | Safe-Shutdown Procedures | COL Applicant | Note 3 | Compliance - See C.5.5 |
| C.5.5.2 | Alternative/Dedicated Shutdown Procedures | COL Applicant | Note 3 | Compliance - See C.5.5 |
| C.5.5.3 | Repair Procedures | COL Applicant | Note 3 | Compliance - Consistent with the U.S. EPR FSAR, the plant does not permit repairs to achieve hot or cold shutdown conditions; procedures are not required. |
| C.6.1.6 | Alternative/Dedicated Shutdown Panels | Compliance | | The FPP includes procedures to control transient combustibles consistent with the Fire Hazards Analysis and good fire prevention practices. |
| C.6.2.4 | Independent Spent Fuel Storage Areas | COL Applicant | Note 3 | Compliance – No Independent Spent Fuel Storage Areas are planned for the plant at this time and are not included in this COL application. |
| C.6.2.6 | Cooling Towers | COL Applicant | Note 3 | Compliance - Essential Service Water Cooling Towers are addressed in Appendix 9A. The Cooling Tower Structures are addressed in Appendix 9B. |
| C.7.6 | Nearby Facilities | COL Applicant | Note 3 | Compliance - Appendix 9A of the U.S. EPR FSAR provides the technical analysis for the nuclear island and related power block structures and demonstrates that the EPR has the ability to achieve and maintain safe-shutdown and to minimize the release of radioactive materials to the environment. FSAR Appendix 9B of this COL application provides an analysis of fire hazards and details fire protection attributes for the remainder of the plant. |


© 2008 UniStar Nuclear Services, LLC. All rights reserved.
COPYRIGHT PROTECTED

**Table 9.5-1 {Fire Protection Program Compliance with Regulatory Guide 1.189}**
(Page 8 of 8)

| R.G. Section | Regulatory Guide 1.189 "C. Regulatory Position"[1] | Compliance[2] | U.S. EPR Comment | BBNPP Supplement |
|---|---|---|---|---|
| C.8.4 | Applicable Industry Codes and Standards | Compliance | | The FPP will conform to the codes and standards and applicable edition years listed in Section 9.5.1.7 of the U.S. EPR FSAR. |
| C.8.6 | Fire Protection Program Implementation Schedule | Compliance | | The required elements of the FPP are fully operational prior to receipt of new fuel for buildings storing new fuel and adjacent areas that could affect the fuel storage area at the plant. Other required elements of the FPP described in FSAR Section 9.5.1 are fully operational prior to initial fuel loading at. |

Notes:

1. The scope of the Regulatory Position presented in this compliance comparison table is abbreviated, due to the depth of detail contained within the Regulatory Position Appendix C itself. The user should refer to Regulatory Guide 1.189 directly for the text portion of each section addressed by the table.
2. The U.S. EPR compliance to the regulatory positions delineated in Regulatory Guide 1.189, "Fire Protection for Nuclear Power Plants," is as indicated by the following definitions:
   - COL Applicant – The COL Applicant will address the subject regulatory position.
   - Compliance – The U.S. EPR design supports compliance with the subject regulatory position.
3. A COL Applicant that references the U.S. EPR design certification will submit site specific information to address the Regulatory Position.


© 2008 UniStar Nuclear Services, LLC. All rights reserved.
COPYRIGHT PROTECTED

**Figure 9.5-1 {Fire Protection Organization}**

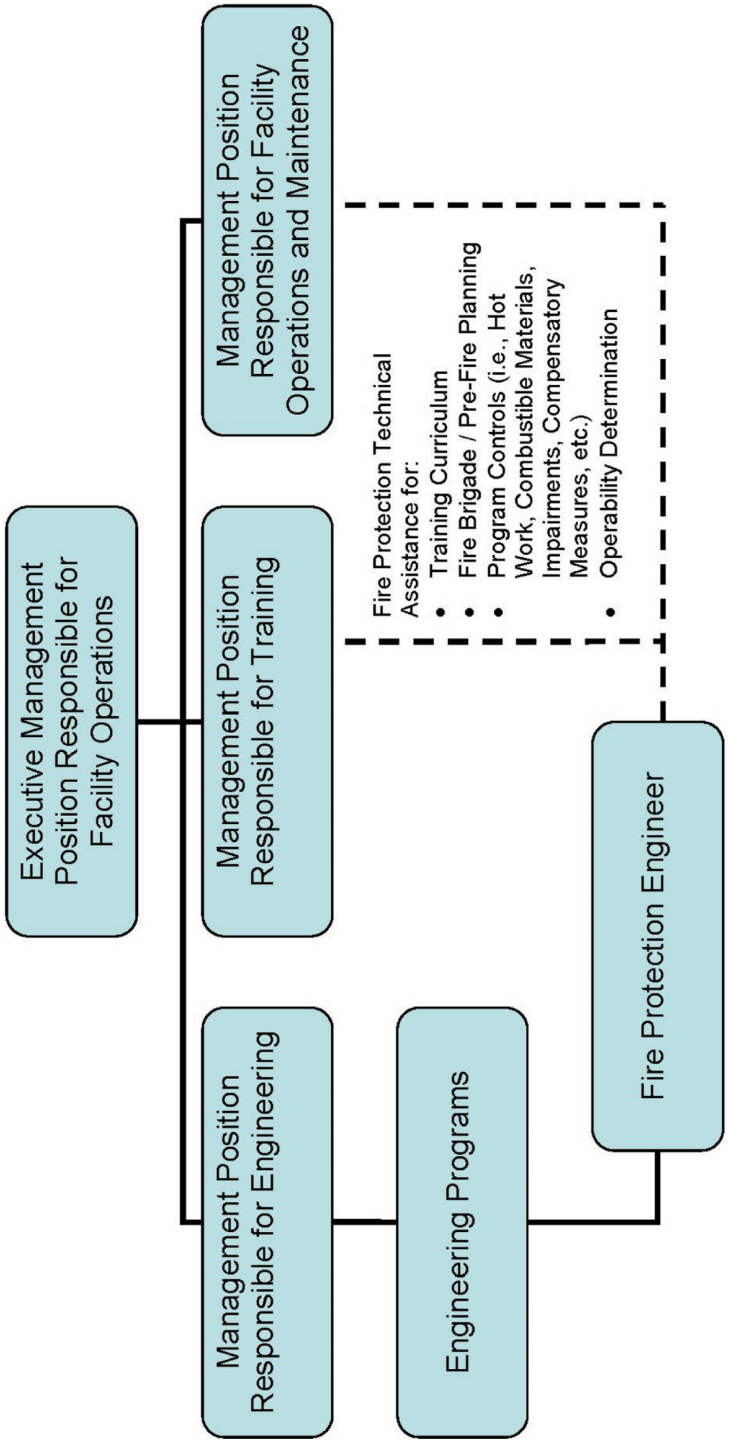



© 2008 UniStar Nuclear Services, LLC. All rights reserved.
COPYRIGHT PROTECTED

## 9A FIRE PROTECTION ANALYSIS

Appendix 9A of the U.S. EPR FSAR is incorporated by reference with the following supplement.

The information in U.S. EPR FSAR Appendix 9A – the fire protection analysis of the nuclear island – is supported by additional information provided in Appendix 9B. Appendix 9B provides the fire protection analysis of the remaining power block and balance of plant structures.

Figures 9A-98 through 106 in the U.S. EPR FSAR are identified as conceptual information for the Access Building. These figures and the corresponding fire area parameters in Table 9A-2 of the U.S. EPR FSAR for the Access Building are applicable to the plant.


© 2008 UniStar Nuclear Services, LLC. All rights reserved.
COPYRIGHT PROTECTED