3E.0 CRITICAL SECTIONS FOR SAFETY-RELATED CATEGORY I STRUCTURES

This section of the U.S. EPR FSAR is incorporated by reference, with the following supplements.

The U.S. EPR FSAR contains the following COL item in Appendix 3E:

> A COL applicant that references the U.S. EPR design certification will address critical sections relevant to site-specific Seismic Category I structures.

This COL item is addressed as follows:

{The values in the governing forces and moments tables are based on the U.S. EPR design certification loads. Evaluations of Seismic Category I structures for the BBNPP site-specific GMRS/FIRS and site-specific soil profiles are described in Section 3.8.

Section 3E.4 of Appendix 3E provides the discussion regarding the critical sections of the site-specific Seismic Category I Structures:

- ESWEMS Pumphouse
- ESWEMS Retention Pond}

3E.1 NUCLEAR ISLAND STRUCTURES

No departures or supplements.

3E.2 EMERGENCY POWER GENERATING BUILDINGS

No departures or supplements.

3E.3 ESSENTIAL SERVICE WATER BUILDINGS

No departures or supplements.

3E.4 {ESWEMS PUMPHOUSE AND ESWEMS RETENTION POND

This section is a supplement to U.S. EPR FSAR Appendix 3E.

Descriptions of Critical Sections of the ESWEMS Retention Pond

The critical sections and critical failure surfaces of the ESWEMS Retention Pond relate to geometry and slope stability analysis, and therefore this discussion is included as part of Section 2.5.5 and Section 3.8.4.5. The specifc design details, hazard identification and hazard evaluation are provided in the following sections.

ESWEMS Retention Pond Design Details

The ESWEMS Retention Pond is an open water storage pond. The ESWEMS Retention Pond is constructed via excavation of overburden alluvial soil to the Mahantango bed rock at Elevation 640.0 ft (195.1 m) msl and replacement of the soil with compacted cohesive fill back to Elevation 669.0 ft (203.9 m) msl, except in the pond interior. Embankments are constructed of compacted cohesive fill from Elevation 669 ft (203.9 m) to 674 ft (205.4 m) msl to provide adequate free board. The embankments contain a 6 ft (1.8 m) wide spill-way with a crest Elevation of 672.0 ft (204.9 m) msl. The sloped surface of the pond are protected from erosion by 1.5 ft (0.5 m) of riprap on top of 1 ft (0.3 m) of bedding from Elevation 662 ft (201.8 m) msl to the top of the embankment. Details of the pond are shown in Figure 3.4-6 through Figure 3.4-11. The approximate dimensions of the pond at Elevation 674 ft (205.4 m) msl are 700 ft by 400 ft (213.3 m by 121.9 m). Design storage volume is based on a minimum water level at Elevation 664 ft (202.4 m) msl. The normal water level will be at Elevation 669.0 ft (203.9 m) msl.

The area surrounding the pond is graded so as to prevent surface runoff from entering the retention pond. The pond spill-way is required to pass only the precipitation falling on the pond surface. It is designed to route the excess water to a natural watercourse.

Key dimensions and attributes are described below:

- The crest of the slope is at Elevation 674.0 ft (205.4 m), the same as the natural grade elevation.
- The permanent slope of the pond wall is 3:1 (horizontal to vertical).
- The bottom of excavation is at approximate Elevation 640.0 ft (195.1 m) msl, and the natural alluvial soils will be replaced by compacted cohesive soil to form the shape of the retention pond.
- The bottom of the retention pond will be at Elevation 651.5 ft (198.6 m) msl.
- Minimum required water is at Elevation 664 ft (202.4 m) msl or 12 ft (3.6 m) in depth.
- The normal water level will be at Elevation 669.0 ft (203.9 m) msl. This results in a normal useful water depth of 17 ft (5.2 m) as there is a 0.5 ft (0.15 m) curb around the pumphouse intake.
- The maximum design water level, due to PMP and wave surge, is at Elevation 672.13 ft (204.87 m) msl.
- The cohesive fill is protected by 0.5 ft (0.15 m) of fine bedding on top of the cohesive fill in addition to 0.5 ft (0.15 m) of coarse bedding and 1.5 ft (0.46 m) of riprap for erosion protection. The bedding/riprap is installed beginning at Elevation 662.0 ft (201.8 m) msl and continues to the top of the slope.

- The reinforced concrete spillway is 6 ft (1.8 m) wide x 0.625 ft (0.191 m) thick with a crest Elevation of 672.0 ft (204.9 m) msl

ESWEMS Retention Pond Hazard Identification

The critical sections of the pond include the slope and the concrete spillway. They must maintain the ability to withstand static and dynamic loadings, as well as to absorb the impact from tornado generated missiles without failures that compromise its safety-related function. Threats to the stability of the slope and spillway are:

- Wind generated wave action in conjunction with PMP. Both wave impact and erosion.
- Lateral loading on the slope due to ice formation.
- Impact force from tornado generated missiles on the pond slope, bottom, and the spillway

ESWEMS Retention Pond Hazard Evaluation

The ESWEMS Retention Pond is constructed via excavation of overburden alluvial soil to the Mahantango bed rock at Elevation 640.0 ft (195.1 m) msl and replaced with cohesive material back to 669.0 ft (203.9 m) msl, except in the pond interior. Embankments are constructed of compacted cohesive fill from Elevation 669 ft (203.9 m) to 674 ft (205.4 m) msl. The cohesive soil is compacted uniformly at 0.67 ft (0.20 m) lift to achieve a density of at least 90% or of 95% the maximum density to ASTM D1557 (ASTM, 2007) at -1% to 3% optimum moisture content. From Elevation 662.0 ft (201.8 m) msl to the grade at Elevation 674.5 ft (205.4 m) msl, the riprap stone layer consists of hard durable, and angular in shape dump stones with sizes varied from 0.083 ft (0.025 m) to fill void to the maximum 1.5 ft (0.46 m). The calculated factor of safety for the pond slope stability in withstanding static and dynamic loadings are tabulated in Table 3.8-2.

The static evaluation of the pond slope stability is evaluated for the loads identified in Section 3.8.4.3.1. The required factor of safety for the pond slope stability is tabulated in Table 3.4-7. The dynamic evaluation of the pond stability is described in Section 2.5.5.2. As discussed in Section 2.5.5.2.1, circular and wedge analyses were performed under static and dynamic loading conditions to evaluate slope stability. These analyses concluded that the slopes at the site are sufficiently stable, and present no failure potential that would adversely affect the safety of BBNPP.

Based on the local historical climatology, the maximum elevation due to PMP and wind generated wave surge in the ESWEMS retention pond is calculated to be 672.13 ft (204.87 m) msl or 3.13 ft (0.954 m) higher than normal water level. The riprap has been sized for the bounding condition of a 4.0 ft (1.22 m) high wave. The calculated maximum wave surge is bounded by the design of the riprap, and the slope will not fail due to erosion. Further, the mass and soil characteristics of the cohesive fill, topped by the riprap and bedding is sufficient to withstand the loading due to wave impact. Therefore, the slope will not fail due to wave impact.

The mass and soil characteristics of the cohesive fill, topped by the riprap and bedding is sufficient to withstand the lateral loading generated by ice formation on the pond. The lateral loading is also mitigated by the slope of the pond. Therefore, the slope will not fail due to lateral loading by ice formation.

The impact of tornado missiles on the ESWEMS pond slope, bottom, and spill-way is evaluated in Section 3.5.1.4

ESWEMS Pumphouse

Description of Critical Sections of the ESWEMS Pumphouse

The General Arrangement Plans and Elevations of the ESWEMS Pumphouse and the associated ESWEMS Retention Pond are provided as Figure 9.2-4 through Figure 9.2-10, as applicable. A general description of both structures is provided below, with additional information contained in Section 3.8.4.1.11.

The ESWEMS Pumphouse is a reinforced concrete structure approximately 80 ft (24.4 m) long by 51 ft (15.5 m) wide by 24 ft (7.3 m) high, consisting of the following major structural components:

- Elevation 674.5 ft (205.5 m) msl: Top of concrete (TOC) for the 5 ft (1.5 m) thick base mat
- Elevation 686.5 ft (209.2 m) msl: TOC of the 2 ft (0.6 m) thick mezzanine floor.
- Elevation 698.5 ft (212.9 m) msl: TOC of the 2 ft (0.6 m) thick concrete roof.
- Elevation 644.0 ft (196.2 m) msl: TOC for the 3 ft (0.9 m) thick pumpwell base.
- Elevation 644.0 ft (196.2 m) msl sloped up to around Elevation 652.0 ft (198.7 m) +/- for TOC of the 3 ft (0.9 m) thick x 60 ft (18.3 m) long concrete apron pad with two wing walls.
- Exterior walls of the ESWEMS Pumphouse (i.e., walls located above the at grade base mat deck) are minimum 2 ft (0.61 m) thick.
- Water-facing wall of the pumpwells is 2 ft (0.6 m) thick.

Design Criteria

The ESWEMS Pumphouse is designed in accordance with the provisions of ACI 349-01 (ACI, 2001) (as supplemented by Regulatory Guide 1.142 (NRC, 2001). Loading includes dead loads (including equipment dead loads), live loads, construction loads, snow loads, pipe loads, soil pressure, hydrostatic pressure, seismic SSE responses, dynamic soil pressures, normal and tornado wind, tornado depressurization, tornado generated missiles, and probable maximum flood (PMF), water pressure plus wave pressures. Table 3.4-1 provides the governing design load combinations for the ESWEMS Pumphouse structure. Table 3.4-2 provides the required minimum Factor-of-Safety for building stability design for the ESWEMS Pumphouse structure. For the design, load combinations are conservatively simplified and enveloped in Load Combination Cases 2, 3, and 4, as shown on Table 3.4-1.

Since it is unlikely for thick ice to form in the pumpwell compartments due to the controlled environment of the building, the pumpwell walls are not evaluated to resist ice expansion forces.

Ice forming between the wing walls of the apron will not develop the full expansion force on the walls, because it is free to expand toward the pond shore.

The ice impact force on the water-facing wall of the pumpwell, is less than and bounded by the impact from tornado generated missiles, because the ice is free to expand toward the pond shore.

Building structural components are evaluated for peak positive overpressure of 1.0 psi due to postulated explosions without combination with other design basis loadings.

Description of the Critical Section and Computer Model

The main at-grade floor base mat, see Figure 9.2-4, consists of 5 ft (1.5 m) thick reinforced concrete slab on concrete backfill. Five (three divider walls and two exterior walls) of 2 ft (0.61 m) thick concrete walls (located parallel to the direction of water pump flow) bear on the base mat. Thus, vertical loads from the roof and operating mezzanine deck are carried to the base mat. Additional vertical loads, mainly over the pumpwell areas are transferred down to the pumpwell base founded on the Mahantango formation. The concrete apron and its associated wing walls are designed to resist the global overturning moments from wind and seismic loadings. The bearing stress is resisted by the base mat, pump well base and the apron.

The two shear keys embedded in the Mahantango formation are designed to withstand the building sliding shear toward the pond that is beyond the resisting friction developed between building foundation and the concrete backfill overlying the Mahantango formation.

Figure 9.2-4 though Figure 9.2-10, and Figure 3.4-4 through Figure 3.4-12 provide plans, elevations, and sections for the ESWEMS Pumphouse and its associated pond. The associated finite element mesh for the base mat is provided in Figure 3.4-1 through Figure 3.4-3.

Design and Stress Analysis Using GT STRUDL Response Spectrum Method

SSE accelerations are applied to dead load, equipment load (e.g., electrical/HVAC equipment, mechanical pumps, etc), 25 percent of the design live load, and minimum 75 percent of the design snow load.

The hydrostatic and hydrodynamic probable maximum precipitation (PMP) pressures are applied to walls and slabs of the ESWEMS pumpwells structural finite element model and consist of:

- Hydrostatic pressures associated with the PMP in addition to water wind setup (0.13 ft) to a maximum water column at Elevation 672.13 ft (204.87 m) msl. The extreme water level at the ESWEMS Pumphouse location may reach Elevation 672.13 ft msl (204.87 m).
- Several recurrence intervals were considered coincident with the maximum probable water level of Elevation 672.13 ft (204.87 m) to ensure that the ESWEMS Retention Pond does not overtop. For the 1,000-yr recurrence interval and under the PMP Elevation 672.13 ft, the freeboard requirement is 1.30 ft (0.40 m) bringing the water level at the ESWEMS Retention Pond to Elevation 673.43 ft (205.26 m), as discussed in Section 2.4.8.2.2.1.
- The wall pressures vary with the location on the structure and the direction of the waves. At the still water elevation of 669 ft (204 m), the maximum applied pressure due to a rising wave of 4.4 ft (1.3 m) is calculated at 590 psf (28 kPa) on the water-facing of the pump well wall. This pressure conservatively accounts for both hydrostatic and hydrodynamic effects.

Stability against both overturning and sliding in addition to the foundation bearing pressures of the ESWEMS Pumphouse has been verified for all seismic load cases as well as the static wind conditions.

It is determined that the tornado wind pressure bounds the overpressure due to postulated explosions.

Results of Critical Section Design

During the design, the enveloping loading conditions, including the extreme environment events (e.g., SSE and PMF), the base mat for the ESWEMS Pumphouse utilized the maximum static and dynamic soil bearing pressures as shown in Table 3.8-1. These values are within the corresponding allowable static/dynamic concrete/rock bearing capacities of 240 ksf (11,500 kPa) and 360 ksf (17,200 kPa), respectively. The building design satisfies the soil bearing pressures and Factor-of-Safety for both static and dynamic conditions.

For the determination of steel reinforcement, calculations were performed to determine the positive and negative bending moments, axial loads, and shear loads within structural components. The factored maximum moments, axials, shears for critical components, such as the base mat, pumpwell base, exterior walls, and the shear keys, etc., are determined and tabulated in Table 3.4-3 through Table 3.4-6. In general, reinforcing bar (#11) will be used for concrete reinforcement at a typical spacing for ease of standardization. Figure 3.4-12 depicts a typical section showing reinforcing arrangement.

3E.4.1 REFERENCES

ACI, 2001. Code Requirements for Nuclear Safety-Related Concrete Structures and Commentary on Code Requirements for Nuclear Safety Related Concrete Structures, ACI 349-01 /349-R0 1, American Concrete Institute, 2001.

ACOE, 2003. Engineering and Design - Slope Stability, EM 1110-2-1902, U.S. Army Corps of Engineers, October 31, 2003.

ASTM, 2007. Standard test Methods for Laboratory Compaction Characteristics of Soil Using Modified Effort (56,000 ft-lbf/ft^3 (2,700 kN-m/m^3)), ASTM D1557-07, American Society of Testing and Materials, 2007.

NRC, 2001. Safety-Related Concrete Structures for Nuclear Power Plants (Other than Reactor Vessels and Containments), Regulatory Guide 1.142, Revision 2, U.S. Nuclear Regulatory Commission, November 2001.}

Table 3.4-1 {Response Spectrum Analysis - Design Load Combinations for ESWEMS Pumphouse Structure}

For final/detailed design, the load combinations shall be in accordance with ACI 349-05 and/or ACI 318-05. However, the enveloped load combinations of the combinations 2, 3 and 4, listed below, have been used in the design. They are considered conservative. Reaction loads from piping are factored in the equipment weight and/or live load.

1. $U = 1.4D + 1.4F + 1.7L + 1.7H + 1.7Ro$
2. $U = 1.4D + 1.4F + 1.7L + 1.7H + 1.7W + 1.7Ro$
3. $U = D + F + L + H + To + Ro + Ess$
4. $U = D + F + L + H + To + Ro + Wt$
5. $U = D + F + L + H + Ta + Ra + 1.25Pa$
6. $U = D + F + L + H + Ta + Ra + 1.0Pa + 1.0(Yr + Yj + Ym) + 1.0Ess$
7. $U = 1.05D + 1.05F + 1.3L + 1.3H + 1.05To + 1.3Ro$
8. $U = 1.05D + 1.05F + 1.3L + 1.3H + 1.3W + 1.05To + 1.3Ro$

Where:

D =dead loads, or related internal moments and forces, including piping and equipment dead loads

Ess = load effects of safe shutdown earthquake (SSE), or related internal moments and forces, including SSE-induced piping and equipment reactions

F = loads due to weight and pressures of fluids with well-defined densities and controllable maximum heights, or related internal moments and forces

H = loads due to weight and pressure of soil, water in soil, or other materials, or related internal moments and forces

L = live loads, or related internal moments and forces, including 25% of live load in conjunction with seismic loadings. Design live loads include 50 psf for commodity attachment, 10 psf for partitional wall, uniform live loads of 400 psf and 250 psf for foundation basemeat and mezzanine floor, and a uniform live load of 200 psf for snow and water ponding on roof.

Pa = differential pressure load, or related internal moments and forces, generated by a postulated pipe break

Ra = piping and equipment reactions, or related internal moments and forces, under thermal conditions generated by a postulated pipe break and including Ro.

Ro = piping and equipment reactions, or related internal moments and forces, which occur under normal operating and shutdown conditions, excluding dead load and earthquake reactions

Ta = internal moments and forces caused by temperature distributions within the concrete structure occurring as a result of accident conditions generated by a postulated pipe break and including To

To = internal moments and forces caused by temperature distributions within the concrete structure occurring as a result of normal operating or shutdown conditions

U = required strength to resist factored loads or related internal moments and forces

W = operating basis wind load (OBW), or related internal moments and forces

Wt = loads generated by the design basis tornado (DBT), or related internal moments and forces. These include loads due to tornado wind pressure, tornado created differential pressures, and tornado generated missiles

Yj = jet impingement load, or related internal moments and forces, on the structure generated by a postulated pipe break

Ym = missile impact load, or related internal moments and forces, on the structure generated by a postulated pipe break, such as pipe whip

Yr = loads, or related internal moments and forces, on the structure generated by the reaction of the broken pipe during a postulated break

Table 3.4-2 {Required Factor Of Safety for ESWEMS Pumphouse Stability}

Load Combination	Minimum Factors of Safety		
	Overturning	Sliding	Floatation
D + F' (Buoyant forces of design basis flood)	N/A	N/A	1.1
D + F (Buoyant forces of design ground water)+ W + H (Lateral earth pressure)	1.5	1.5	N/A
D + F +E + H'	1.5	1.5	N/A
D + F + Wt (Extreme wind load) + H	1.1	1.1	N/A
D + F + E'(Safe Shutdown Earthquake loads) + H' (Lateral earth pressure including dynamic increment)	1.1	1.1	N/A
Load combinations are based on NUREG 0800, Section 3.3.5, Subsection II.3 and II.5			

Table 3.4-3 {ESWEMS Pumphouse Base Mat Resultant Membrane Forces and Moments}

Controlled Load Combination for Design	Nxx (kip/ft)	Nyy (kip/ft)	Nxy (kip/ft)	Mxx (kft/ft)	Myy (kft/ft)	Mxy (kft/ft)	Vxx (kip/ft)	Vyy (kip/ft)
Enveloped static condition, including normal wind loading.	12.0	13.5	7.3	49.1	46.4	33.8	71.3	43.3
Enveloped static condition including tornado wind loading.	23.0	151.3	9.1	32.9	38.2	24.7	48.3	29.1
Average values for dynamic condition, including SSE loading	474.0	216.0	125.0	400.0	125.0	115.0	155.0	60.2

Notes: Reactions from equipment are accounted for in the design live load or equipment masses. The above resultant membrane forces are the enveloped resultants for the load combination cases, which are considered essential and bounding the design of the ESWEMS Pumphouse structure. Other loading cases, including piping, equipment, temperature loads, etc., to be considered in detailed design.

Nxx : In-plan force in X axis
Nyy : In-plan force in Y axis
Nxy: Torsional shear force
Mxx: Out-Of-Plan Bending Moment against X Direction
Myy: Out-Of-Plan Bending Moment against Y Direction
Mxy: Tortional Moment
Vxx : Normal force
Vyy: Normal force

Refer to Figure 3.4-2 For GTStrudl Finite Element Planar Reference System for Plate Forces and Moments.

Table 3.4-4 {ESWEMS Pump Well Foundation Group Resultant Membrane Forces and Moments}

Controlled Load Combination for Design	Nxx (kip/ft)	Nyy (kip/ft)	Nxy (kip/ft)	Mxx (kft/ft)	Myy (kft/ft)	Mxy (kft/ft)	Vxx (kip/ft)	Vyy (kip/ft)
Enveloped static condition, including normal wind loading.	10.9	5.1	6.3	32.1	13.2	6.8	25.4	6.8
Enveloped static condition including tornado wind loading.	11.5	4.1	7.0	25.0	11.9	5.8	23.6	4.6
Average values for dynamic condition, including SSE loading	176	37.8	81.0	452	80.1	38.2	194	39.1

Notes: Reactions from equipment are accounted for in the design live load or equipment masses. The above resultant membrane forces are the enveloped resultants for the load combination cases, which are considered essential and bounding the design of the ESWEMS Pumphouse structure. Other loading cases, including piping, equipment, temperature loads, etc., to be considered in detailed design

Nxx : In-plan force in X axis
Nyy : In-plan force in Y axis
Nxy: Torsional shear force
Mxx: Out-Of-Plan Bending Moment against X Direction
Myy: Out-Of-Plan Bending Moment against Y Direction
Mxy: Tortional Moment
Vxx : Normal force
Vyy: Normal force

Refer to Figure 3.4-3 For GTStrudl Finite Element Planar Reference System for Plate Forces and Moments.

Table 3.4-5 {ESWEMS Shear Keys Reaction Forces and Moments}

Controlled Load Combination for Design	Nxx (kip/ft)	Nyy (kip/ft)	Nxy (kip/ft)	Mxx (kft/ft)	Myy (kft/ft)	Mxy (kft/ft)	Vxx (kip/ft)	Vyy (kip/ft)
Enveloped static condition, including normal wind loading.	-2.0	2.1	5.0	25.3	3.5	10.6	6.1	3.6
Enveloped static condition including tornado wind loading.	11.5	4.1	7.0	46.0	11.9	11.0	23.6	4.5
Average values for dynamic condition, including SSE loading	144.0	27.2	81.9	56.6	133.0	164.0	12.2	39.3

Notes: Reactions from equipment are accounted for in the design live load or equipment masses. The above resultant membrane forces are the enveloped resultants for the load combination cases, which are considered essential and bounding the design of the ESWEMS Pumphouse structure. Other loading cases, including piping, equipment, temperature loads, etc., to be considered in detailed design

Nxx : In-plan force in X axis
Nyy : In-plan force in Y axis
Nxy: Torsional shear force
Mxx: Out-Of-Plan Bending Moment against X Direction
Myy: Out-Of-Plan Bending Moment against Y Direction
Mxy: Tortional Moment
Vxx : Normal force
Vyy: Normal force

Refer to Figure 3.4-3 For GTStrudl Finite Element Planar Reference System for Plate Forces and Moments.

Table 3.4-6 {ESWEMS Pumphouse Walls Resultant Membrane Forces & Moments}

Controlled Load Combination for Design	Nxx (kip/ft)	Nyy (kip/ft)	Nxy (kip/ft)	Mxx (kft/ft)	Myy (kft/ft)	Mxy (kft/ft)	Vxx (kip/ft)	Vyy (kip/ft)
Enveloped static condition, including normal wind loading.	5.4	10.7	26.8	1.1	1.3	0.3	0.7	0.82
Enveloped static condition including tornado wind loading.	6.1	11.1	22.8	1.6	3.1	0.49	0.92	2.4
Average values for dynamic condition, including SSE loading	238.0	62.0	78.8	471.0	87.9	577.0	139.0	53.3

Notes: Reactions from equipment are accounted for in the design live load or equipment masses. The above resultant membrane forces are the enveloped resultants for the load combination cases, which are considered essential and bounding the design of the ESWEMS Pumphouse structure. Other loading cases, including piping, equipment, temperature loads, etc., to be considered in detailed design

Nxx : In-plan force in X axis
Nyy : In-plan force in Y axis
Nxy: Torsional shear force
Mxx: Out-Of-Plan Bending Moment against X Direction
Myy: Out-Of-Plan Bending Moment against Y Direction
Mxy: Tortional Moment
Vxx : Normal force
Vyy: Normal force

Refer to Figure 3.4-3 For GTStrudl Finite Element Planar Reference System for Plate Forces and Moments.

Table 3.4-7 {Required Factor of Safety for the ESWEMS Retention Pond Slope Stability}

Load Combination	Required Factor of Safety Reference EM 1110-2-1902 (ACOE, 2003)
End of Construction	1.3
Normal pond water level	1.5
Maximum pond water level	1.4
Rapid drawdown from maximum to normal pond water without pore water pressure dissipation	1.1
Rapid drawdown from normal pond to empty pond without pore water pressure dissipation	1.1
Normal pond water level with designed surcharge and line load	1.4
SSE Earthquake at normal pond level	1.0

Figure 3.4-1 {Isometric View of ESWEMS Pumphouse Main Base Mat & Pump Well Base - Finite Element Mesh}

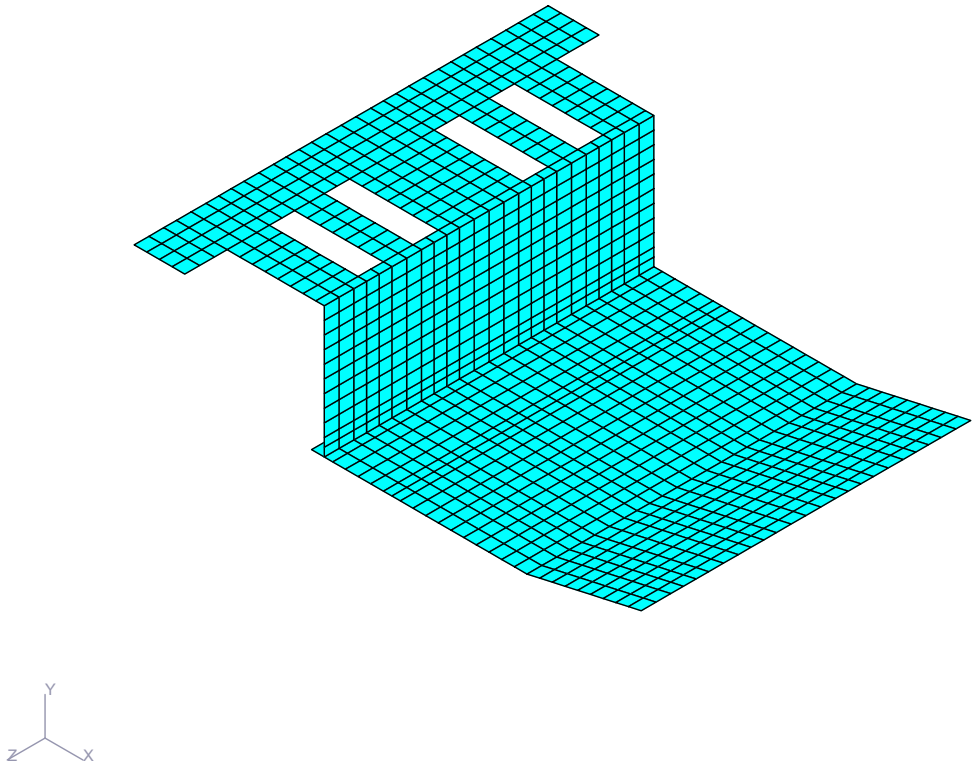

Figure 3.4-2 {Isometric View of ESWEMS Pumphouse GT Strudl Finite Element Model - Exterior Wall, Roof and Apron}

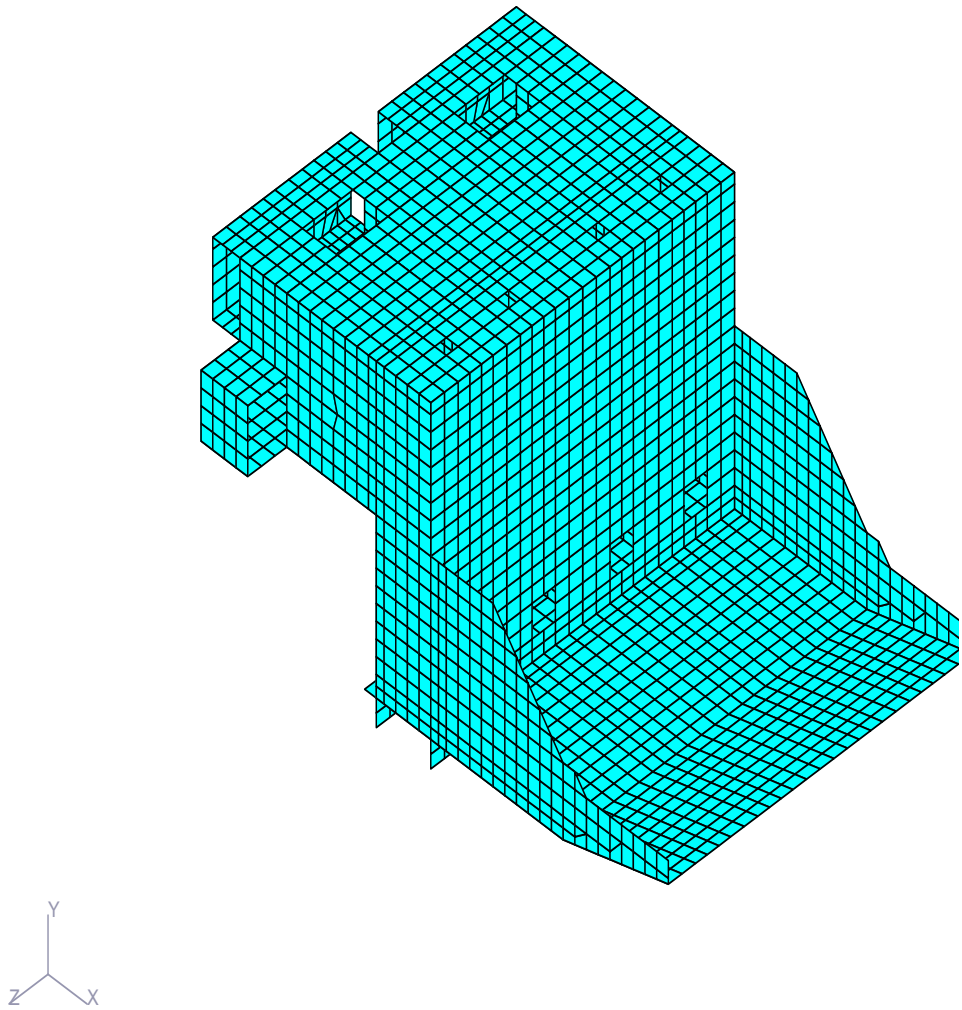

Figure 3.4-3 {GT Strudl Finit Element Planar Reference System}

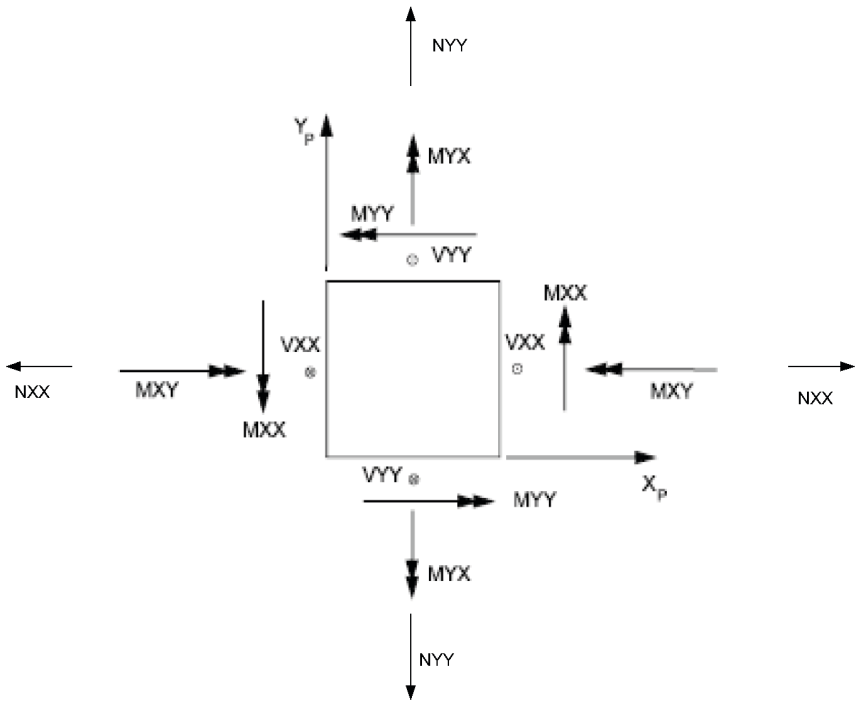

Plate Resultant Forces and Moments

Figure 3.4-4 {Plant Arrangement - ESWEMS Pumphouse Excavation Cut & Backfill}

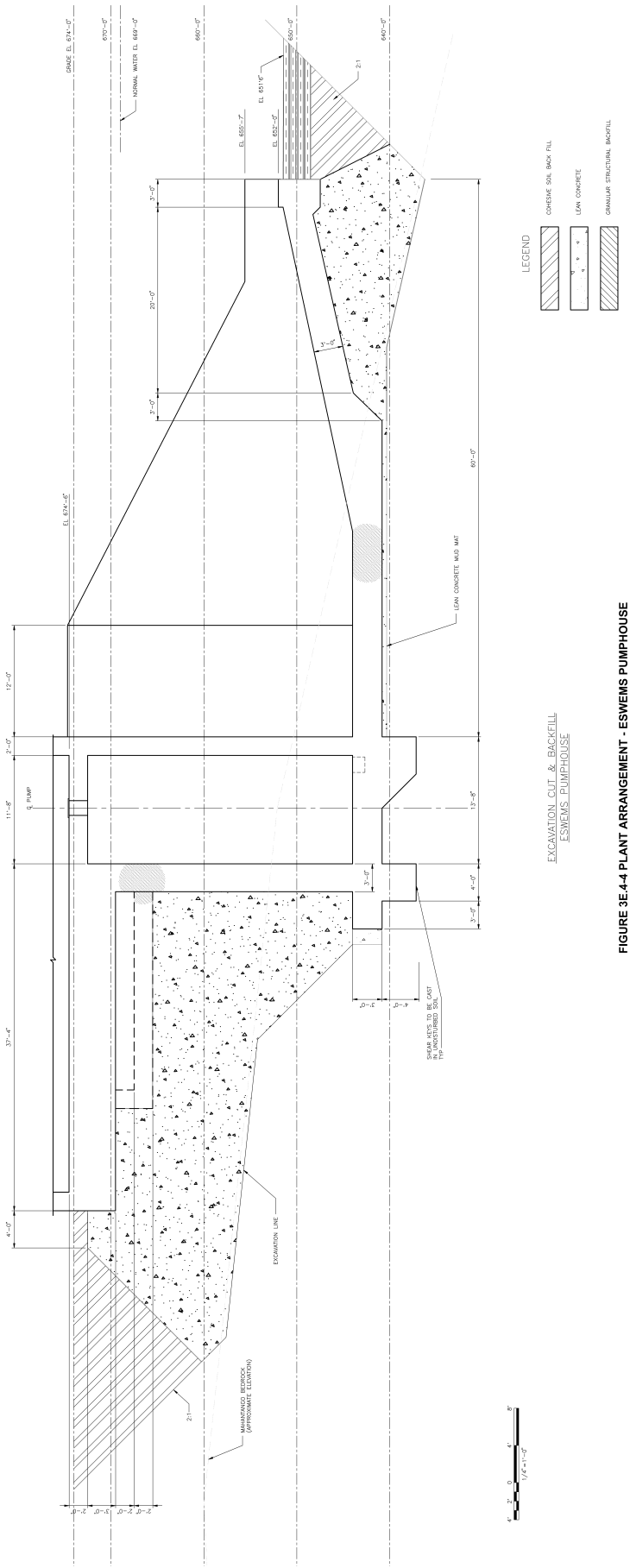

Figure 3.4-5 {Plant Arrangement - ESWEMS Retention Pond & Pumphouse Location Plan}

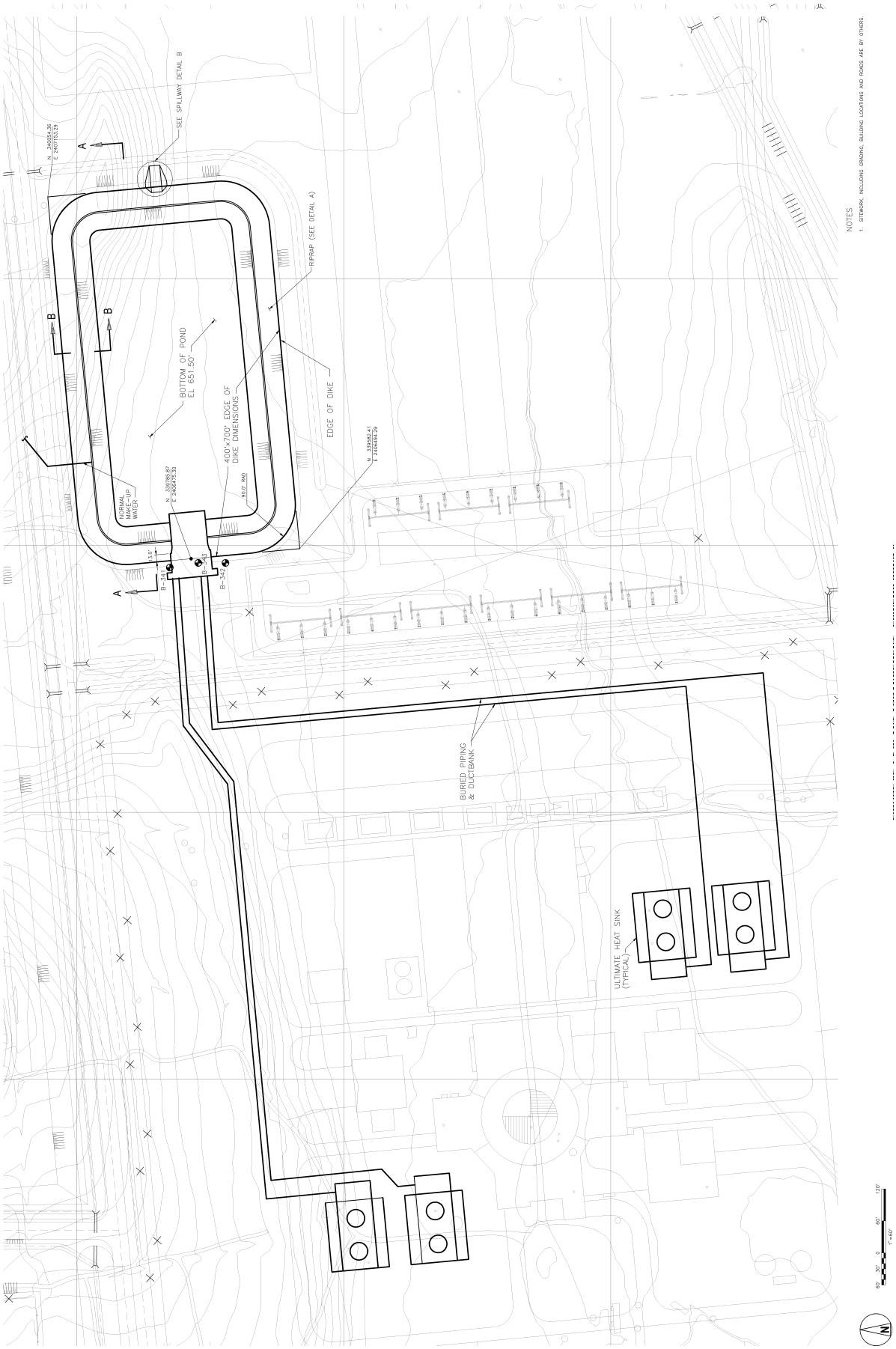

Figure 3.4-6 {Plant Arrangement - ESWEMS Retention Pond Typical Riprap Detail}

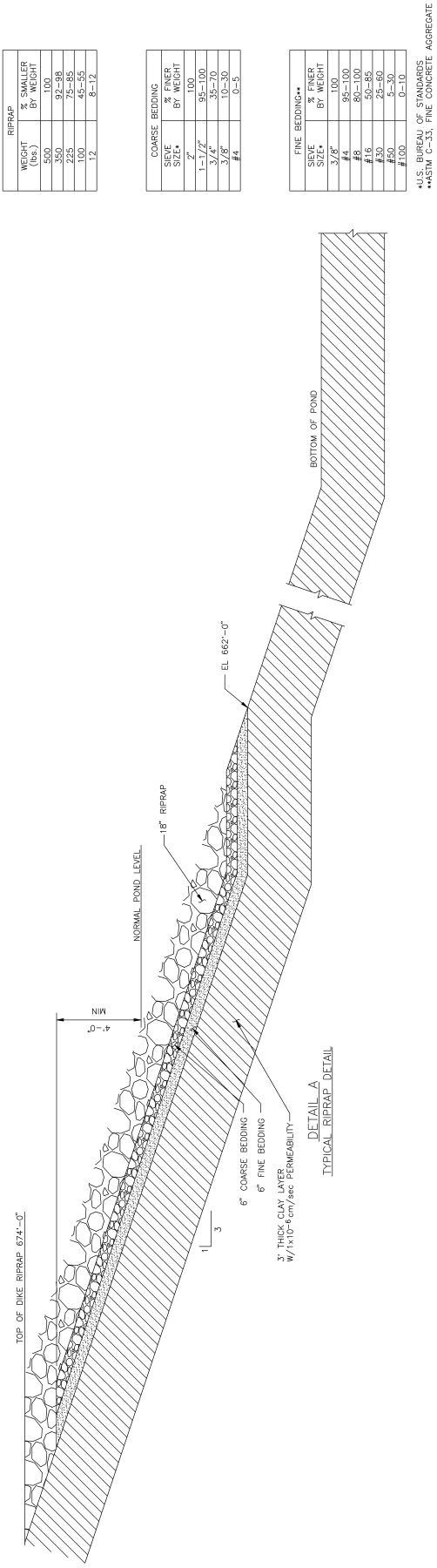

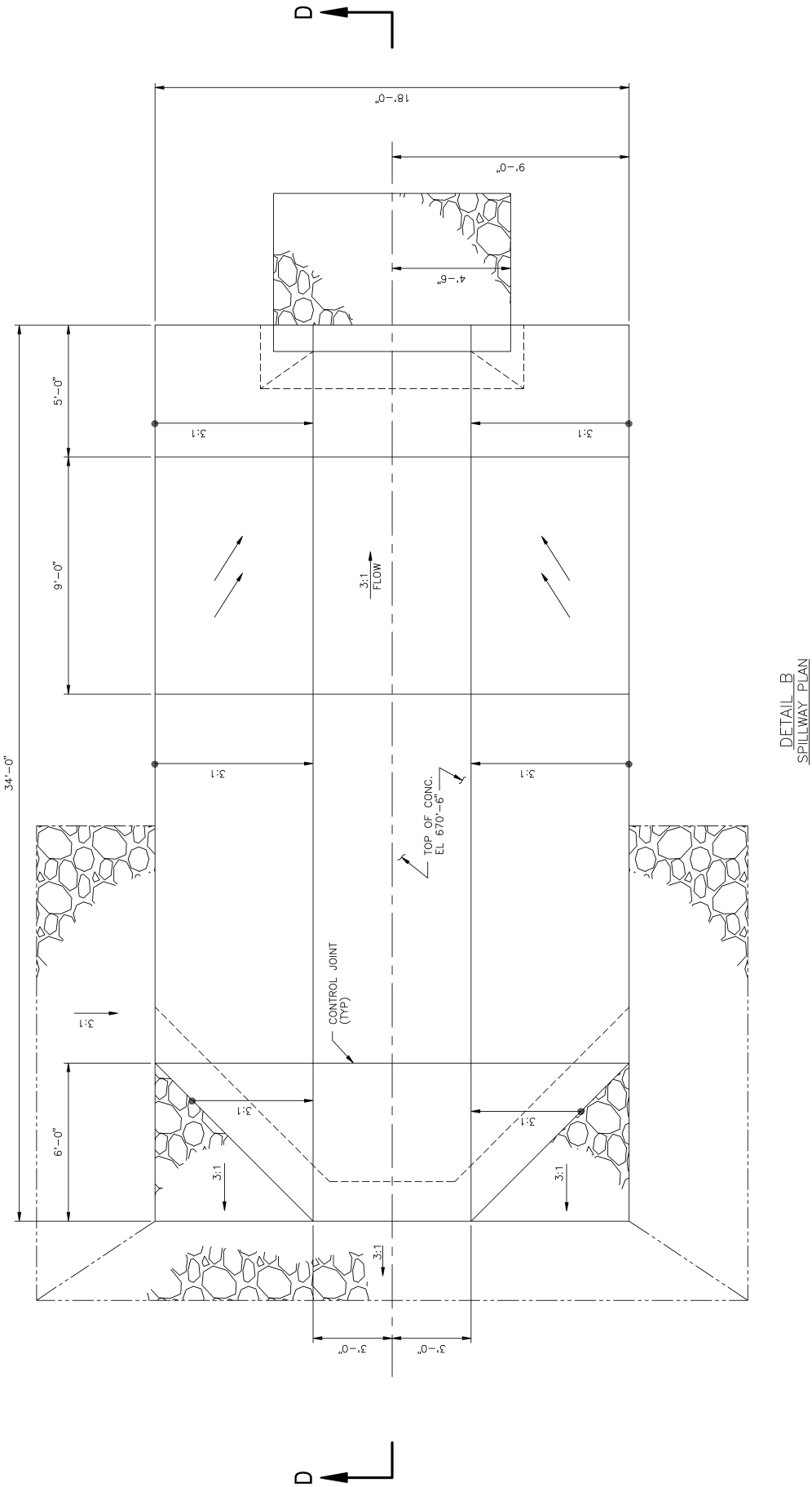

Figure 3.4-7 {Plant Arrangement - ESWEMS Retention Pond Spillway Plan}

Figure 3.4-8 {Plant Arrangement - ESWEMS Retention Pond Spillway Section}

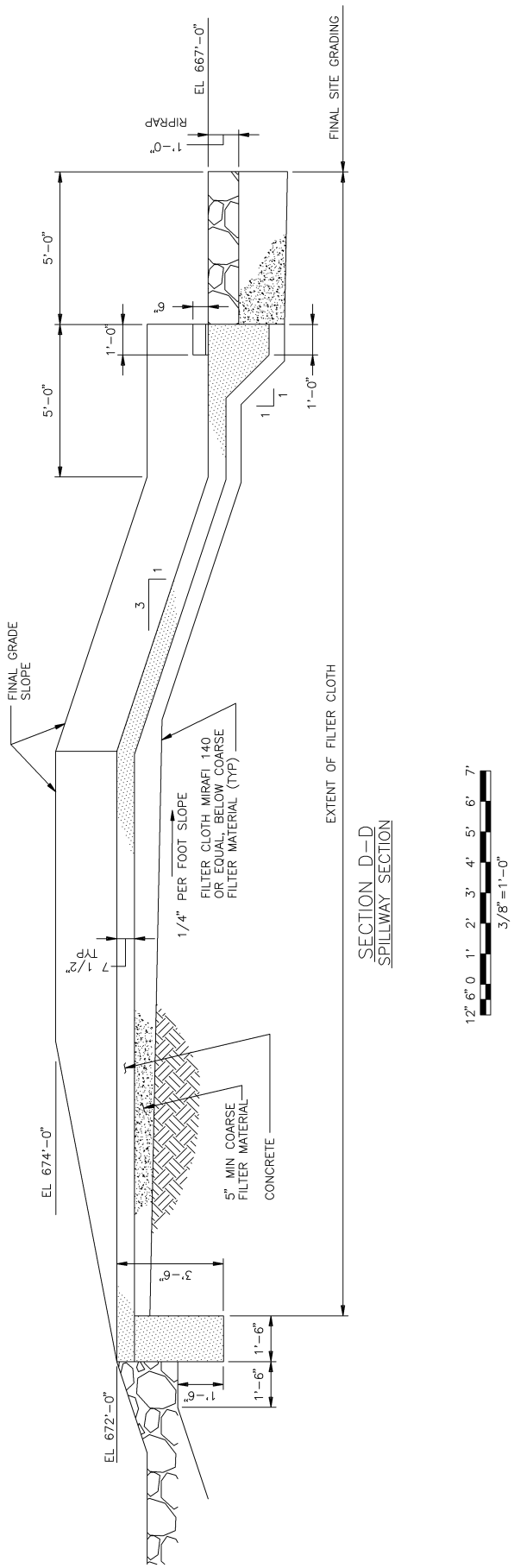

Figure 3.4-9 {Plant Arrangement - ESWEMS Retention Pond Section at Embankment}

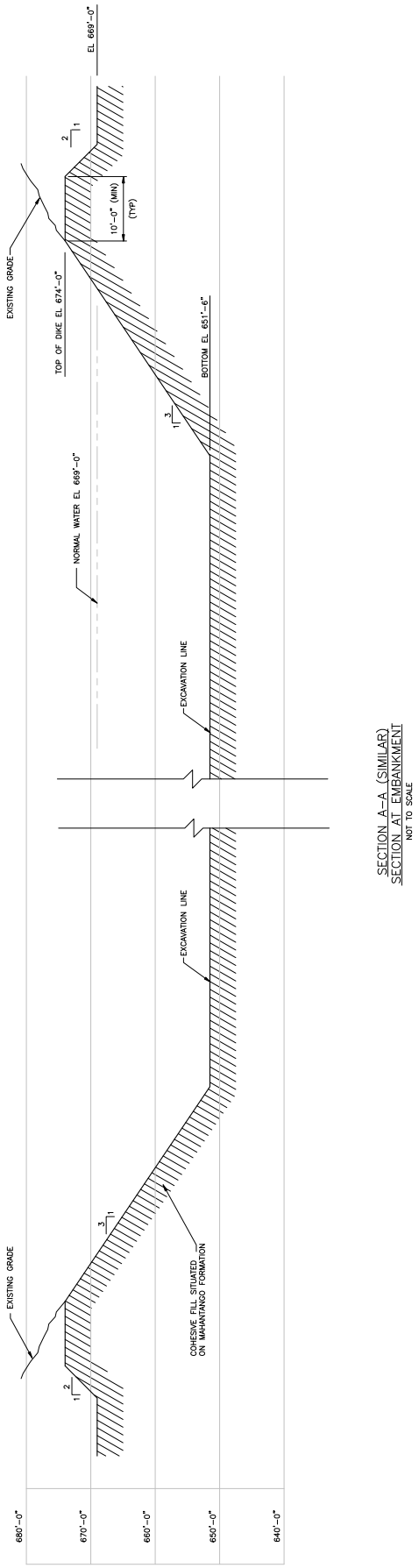

Figure 3.4-10 {Plant Arrangement - ESWEMS Retention Pond Section at Embankment}

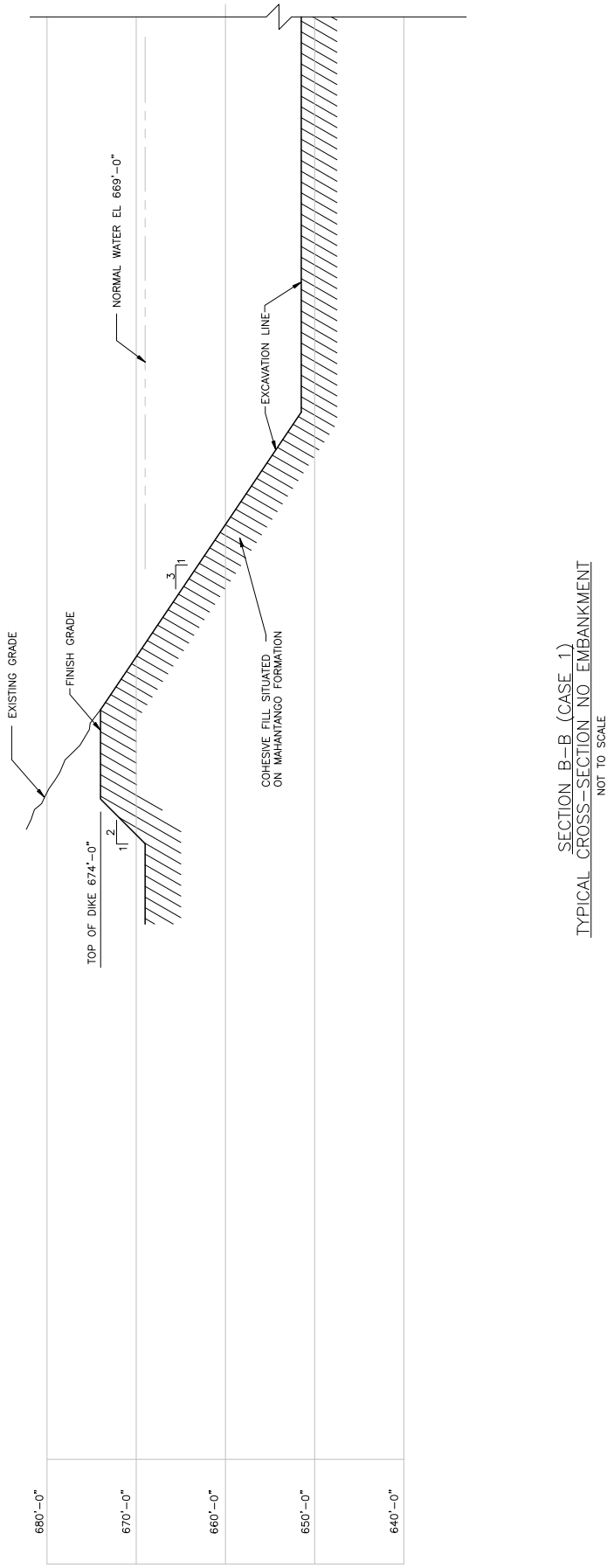

Figure 3.4-11 {Plant Arrangement - ESWEMS Retention Pond Section at Embankment}

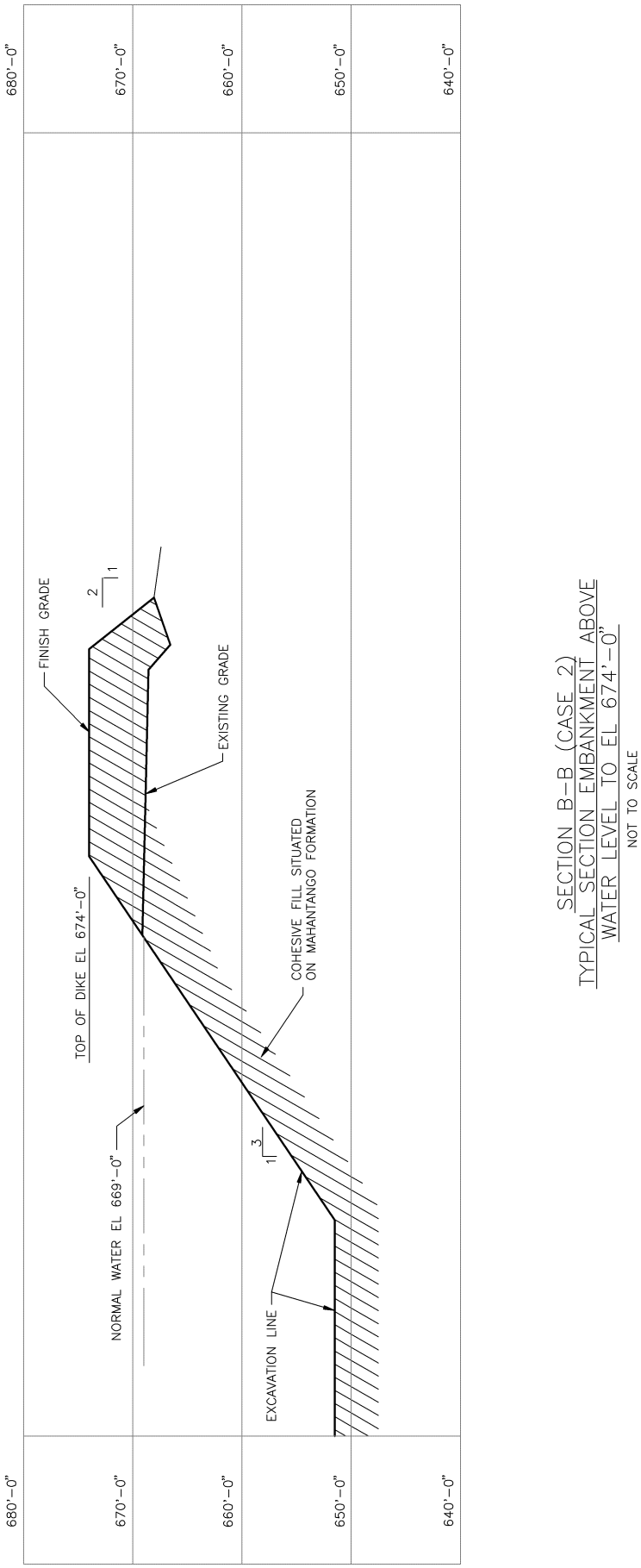

Figure 3.4-12 {Plant Arrangement - ESWEMS Pumphouse Rebar}