8.0 ELECTRIC POWER

This chapter of the U.S. EPR Final Safety Analysis Report (FSAR) is incorporated by reference with supplements as identified in the following sections.

8.1 INTRODUCTION

This section of the U.S. EPR FSAR is incorporated by reference with the following supplements.

8.1.1 OFFSITE POWER DESCRIPTION

The U.S. EPR FSAR includes the following COL Item in Section 8.1.1:

> A COL applicant that references the U.S. EPR design certification will provide site-specific information describing the interface between the offsite transmission system, and the nuclear unit, including switchyard interconnections.

This COL Item is addressed as follows:

{The AmerenUE transmission system consists of interconnected hydroelectric, nuclear, combustion turbine, and fossil-fuel plants supplying electric energy over a 345/230/161/138 kV transmission system. This grid is interconnected to Associated Electric Cooperative Inc., Ameren Illinois, Electric Energy Inc. (Joppa), Southwestern Power Administration, Missouri Public Service, Kansas City Power and Light, Aliant West, and MidAmerica Energy Company through fifty-three (53) 138, 161, or 345 kV connections.

Callaway Nuclear Power Plant (Callaway) is connected to AmerenUE's transmission system via five 345 kV circuits. Two circuits on common towers connect the Callaway Plant Unit 2 switchyard to the Montgomery Substation in Montgomery County to the northeast, (circuits MTGY-CAL-7 and MTGY-CAL-8). Two circuits on common towers connect the Callaway Plant Unit 1 switchyard to the Bland Substation in Gasconade County to the south, (circuits CAL-BLAN-1 and CAL-BLAN-2). One circuit connects the Callaway Plant Unit 1 switchyard to the Loose Creek Substation in Osage County to the southwest, (circuit CAL-LSCR-3). The Callaway Plant Unit 2 switchyard is electrically integrated with the existing Callaway Plant Unit 1 switchyard by two approximately 1 mi (1.6 km) long 345 kV, 1800 MVA circuits. The routes for these circuits are presented in Figure 8.1-1}

The interface between the transmission system and the nuclear unit is further described in Section 8.2.

8.1.2 ONSITE POWER SYSTEM DESCRIPTION

No departures or supplements.

8.1.3 SAFETY-RELATED LOADS

The U.S. EPR FSAR includes the following COL Item in Section 8.1.3:

> A COL applicant that references the U.S. EPR design certification will identify site-specific loading differences that raise the EDG or Class 1E battery loading and demonstrate the electrical distribution system is adequately sized for the additional load.

© 2007-2009 UniStar Nuclear Services, LLC in and to the Reference COLA, namely all text not in brackets
© 2007-2009 Union Electric Company d/b/a AmerenUE in and to all Callaway site specific and
AmerenUE specific COLA material, namely all text in brackets.
All rights reserved. COPYRIGHT PROTECTED

This COL Item is addressed as follows:

{The loads powered from the safety-related sources for the U.S. EPR are specified in U.S. EPR FSAR Tables 8.3-4, 8.3-5, 8.3-6, and 8.3-7. Additional site-specific loads powered from the station EDGs are specified in Table 8.1-1 through Table 8.1-4. This information supplements the U.S. EPR FSAR Tables. The site-specific loads are within the design margin of the EDGs.

Onsite DC power system nominal load values are specified in U.S. EPR FSAR Tables 8.3-12 through 8.3-15. Additional site-specific loads powered from the Class 1E battery source include an additional feeder breaker on the 31/2/3/4BDD bus that provides electrical power to the Essential Service Water Emergency Makeup System (ESWEMS) Pumphouse's 6.9 kV to 480 V transformers. The feeder breakers require steady state control power as listed in the Class 1E Uninterruptible Power Supply (EUPS) Battery Sizing Calculation. The site-specific Class 1E control power demand is bounded by the design margin of the EUPS battery sizing calculation and does not change the DC load requirements specified in U.S. EPR FSAR Tables 8.3-12 through 8.3-15.

8.1.4 DESIGN BASES

8.1.4.1 Offsite Power System

No departures or supplements.

8.1.4.2 Onsite Power System

No departures or supplements.

8.1.4.3 Criteria, Regulatory Guides, Standards, and Technical Positions

No departures or supplements.

8.1.4.4 NRC Generic Letters

The information requested by the NRC in Generic Letter 2006-02 (NRC, 2006), as indicated in U.S. EPR FSAR Section 8.2.1.1, is presented in Section 8.2.1.1.

8.1.5 REFERENCES

{**NRC, 2006**. Grid Reliability and the Impact on Plant Risk and Operability of Offsite Power, NRC Generic Letter 2006-02, U.S. Nuclear Regulatory Commission, February 2006.}

© 2007-2009 UniStar Nuclear Services, LLC in and to the Reference COLA, namely all text not in brackets
© 2007-2009 Union Electric Company d/b/a AmerenUE in and to all Callaway site specific and
AmerenUE specific COLA material, namely all text in brackets.
All rights reserved. COPYRIGHT PROTECTED

Table 8.1-1—{Site Specific Division 1 Emergency Diesel Generator AC Loads}

Time Seq. (s)	Load Description	Volts	Rating (hp/kW)	Operating Load LOOP (kW)	Operating Load DBA/LOOP (kW)
Load Step Group 1 [1]					
15[2]	ESWEMS Pumphouse Ventilation System Emergency Cooling Fan (1 per division, 10 HP each)	480	10 Hp	8.3	8.3
15[3]	ESWEMS Pumphouse Ventilation Control Damper 1 (1 per division, 2 HP each)	480	2 Hp	0	0
15[2]	ESWEMS Pumphouse Ventilation System Emergency Condensing Unit (1 per division, 45 HP each)	480	45 Hp	37.3	37.3
15[2]	ESWEMS Pumphouse Ventilation Pump Room Electric Heater (2 per division, 25 kW each)	480	50 kW	0	0
15[3]	ESWEMS Recirculation Control Valve (1 per division, 2 HP each)	480	2 Hp	0	0
15[3]	ESWEMS Flushing Line Valve (1 per division, 2 HP each)	480	2 Hp	0	0
15[3]	ESWEMS Automatic Strainer (1 per division, 1/4 HP each)	480	1/4 Hp	0	0
15[4]	Estimated Cable Losses per division		2 kW	2	2
15[4]	ESWEMS Pumphouse Transformer Losses and MCC equipment losses (1 per division)		7 kW	7	7
15	Allowance for future small loads		5 kW	5	5
Subtotal of Additional Loads for Load Step Group 1				59.6	59.6
Additional Manually Connected Loads					
N/A [5]	ESWEMS Makeup Water Pumps 30PED10/20/30/40AP001	480	15 Hp	0	0

Notes
1 Power to the ESWEMS Pumphouse is available when power is available to the 31/2/3/4BDD buses during the EDG Loading Sequence Step 1.
2 Cooling systems are assumed to be operating and heating systems are off.
3 Loads seldom function and are not credited towards EDG loading.
4 Estimated Losses.
5 ESWEMS Makeup Water Pumps are not required to run during the first 72 hours of a DBE

© 2007-2009 UniStar Nuclear Services, LLC in and to the Reference COLA, namely all text not in brackets
© 2007-2009 Union Electric Company d/b/a AmerenUE in and to all Callaway site specific and
AmerenUE specific COLA material, namely all text in brackets.
All rights reserved. COPYRIGHT PROTECTED

Table 8.1-2—{Site Specific Division 2 Emergency Diesel Generator AC Loads}

Time Seq. (s)	Load Description	Volts	Rating (hp/kW)	Operating Load LOOP (kW)	Operating Load DBA/LOOP (kW)
Load Step Group 1 [1]					
15[2]	ESWEMS Pumphouse Ventilation System Emergency Cooling Fan (1 per division, 10 HP each)	480	10 Hp	8.3	8.3
15[3]	ESWEMS Pumphouse Ventilation Control Damper 1 (1 per division, 2 HP each)	480	2 Hp	0	0
15[2]	ESWEMS Pumphouse Ventilation System Emergency Condensing Unit (1 per division, 45 HP each)	480	45 Hp	37.3	37.3
15[2]	ESWEMS Pumphouse Ventilation Pump Room Electric Heater (2 per division, 25 kW each)	480	50 kW	0	0
15[3]	ESWEMS Recirculation Control Valve (1 per division, 2 HP each)	480	2 Hp	0	0
15[3]	ESWEMS Flushing Line Valve (1 per division, 2 HP each)	480	2 Hp	0	0
15[3]	ESWEMS Automatic Strainer (1 per division, 1/4 HP each)	480	1/4 Hp	0	0
15[4]	Estimated Cable Losses per division		2 kW	2	2
15[4]	ESWEMS Pumphouse Transformer Losses and MCC equipment losses (1 per division)		7 kW	7	7
15	Allowance for future small loads		5 kW	5	5
Subtotal of Additional Loads for Load Step Group 1				59.6	59.6
Additional Manually Connected Loads					
N/A [5]	ESWEMS Makeup Water Pumps 30PED10/20/30/40AP001	480	15 Hp	0	0

Notes:

1 Power to the ESWEMS Pumphouse is available when power is available to the 31/2/3/4BDD buses during the EDG Loading Sequence Step 1.
2 Cooling systems are assumed to be operating and heating systems are off.
3 Loads seldom function and are not credited towards EDG loading.
4 Estimated Losses.
5 ESWEMS Makeup Water Pumps are not required to run during the first 72 hours of a DBE.

© 2007-2009 UniStar Nuclear Services, LLC in and to the Reference COLA, namely all text not in brackets
© 2007-2009 Union Electric Company d/b/a AmerenUE in and to all Callaway site specific and
AmerenUE specific COLA material, namely all text in brackets.
All rights reserved. COPYRIGHT PROTECTED

Table 8.1-3—{Site Specific Division 3 Emergency Diesel Generator AC Loads}

Time Seq. (s)	Load Description	Volts	Rating (hp/kW)	Operating Load LOOP (kW)	Operating Load DBA/LOOP (kW)
Load Step Group 1 [1]					
15[2]	ESWEMS Pumphouse Ventilation System Emergency Cooling Fan (1 per division, 10 HP each)	480	10 Hp	8.3	8.3
15[3]	ESWEMS Pumphouse Ventilation Control Damper 1 (1 per division, 2 HP each)	480	2 Hp	0	0
15[2]	ESWEMS Pumphouse Ventilation System Emergency Condensing Unit (1 per division, 45 HP each)	480	45 Hp	37.3	37.3
15[2]	ESWEMS Pumphouse Ventilation Pump Room Electric Heater (2 per division, 25 kW each)	480	50 kW	0	0
15[3]	ESWEMS Recirculation Control Valve (1 per division, 2 HP each)	480	2 Hp	0	0
15[3]	ESWEMS Flushing Line Valve (1 per division, 2 HP each)	480	2 Hp	0	0
15[3]	ESWEMS Automatic Strainer (1 per division, 1/4 HP each)	480	1/4 Hp	0	0
15[4]	Estimated Cable Losses per division		2 kW	2	2
15[4]	ESWEMS Pumphouse Transformer Losses and MCC equipment losses (1 per division)		7 kW	7	7
15	Allowance for future small loads		5 kW	5	5
Subtotal of Additional Loads for Load Step Group 1				59.6	59.6
Additional Manually Connected Loads					
N/A [5]	ESWEMS Makeup Water Pumps 30PED10/20/30/40AP001	480	15 Hp	0	0

Notes:

1 Power to the ESWEMS Pumphouse is available when power is available to the 31/2/3/4BDD buses during the EDG Loading Sequence Step 1.

2 Cooling systems are assumed to be operating and heating systems are off.

3 Loads seldom function and are not credited towards EDG loading.

4 Estimated Losses.

5 ESWEMS Makeup Water Pumps are not required to run during the first 72 hours of a DBE

© 2007-2009 UniStar Nuclear Services, LLC in and to the Reference COLA, namely all text not in brackets
© 2007-2009 Union Electric Company d/b/a AmerenUE in and to all Callaway site specific and
AmerenUE specific COLA material, namely all text in brackets.
All rights reserved. COPYRIGHT PROTECTED

Table 8.1-4—{Site Specific Division 4 Emergency Diesel Generator AC Loads}

Time Seq. (s)	Load Description	Volts	Rating (hp/kW)	Operating Load LOOP (kW)	Operating Load DBA/LOOP (kW)
Load Step Group 1 [1]					
15[2]	ESWEMS Pumphouse Ventilation System Emergency Cooling Fan (1 per division, 10 HP each)	480	10 Hp	8.3	8.3
15[3]	ESWEMS Pumphouse Ventilation Control Damper 1 (1 per division, 2 HP each)	480	2 Hp	0	0
15[2]	ESWEMS Pumphouse Ventilation System Emergency Condensing Unit (1 per division, 45 HP each)	480	45 Hp	37.3	37.3
15[2]	ESWEMS Pumphouse Ventilation Pump Room Electric Heater (2 per division, 25 kW each)	480	50 kW	0	0
15[3]	ESWEMS Recirculation Control Valve (1 per division, 2 HP each)	480	2 Hp	0	0
15[3]	ESWEMS Flushing Line Valve (1 per division, 2 HP each)	480	2 Hp	0	0
15[3]	ESWEMS Automatic Strainer (1 per division, 1/4 HP each)	480	1/4 Hp	0	0
15[4]	Estimated Cable Losses per division		2 kW	2	2
15[4]	ESWEMS Pumphouse Transformer Losses and MCC equipment losses (1 per division)		7 kW	7	7
15	Allowance for future small loads		5 kW	5	5
Subtotal of Additional Loads for Load Step Group 1				59.6	59.6
Additional Manually Connected Loads					
N/A [5]	ESWEMS Makeup Water Pumps 30PED10/20/30/40AP001	480	15 Hp	0	0

Notes:

1 Power to the ESWEMS Pumphouse is available when power is available to the 31/2/3/4BDD buses during the EDG Loading Sequence Step 1.
2 Cooling systems are assumed to be operating and heating systems are off.
3 Loads seldom function and are not credited towards EDG loading.
4 Estimated Losses.
5 ESWEMS Makeup Water Pumps are not required to run during the first 72 hours of a DBE.

© 2007-2009 UniStar Nuclear Services, LLC in and to the Reference COLA, namely all text not in brackets
© 2007-2009 Union Electric Company d/b/a AmerenUE in and to all Callaway site specific and
AmerenUE specific COLA material, namely all text in brackets.
All rights reserved. COPYRIGHT PROTECTED

Figure 8.1-1—{Callaway Plant 345 kV Circuit Corridors}

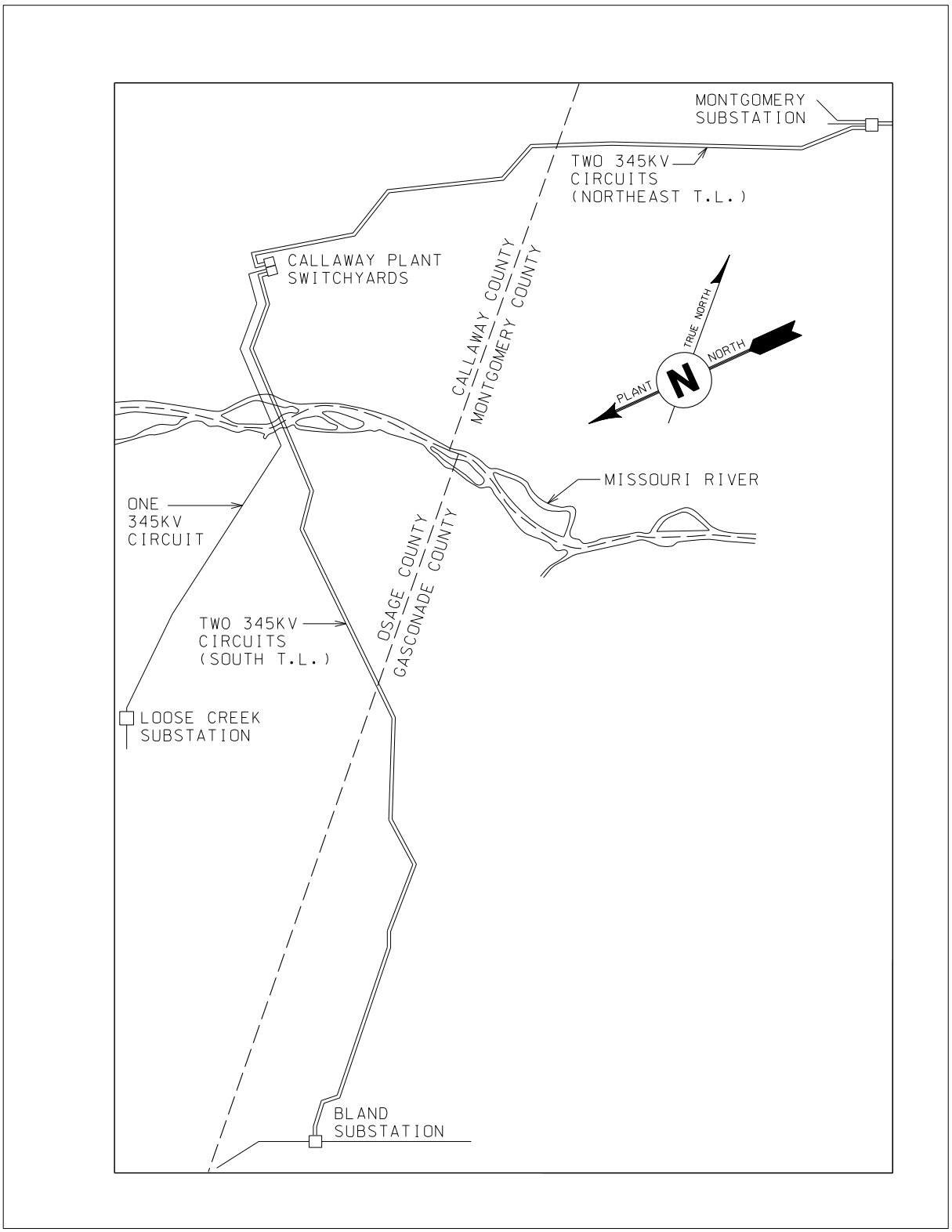

8.2 OFFSITE POWER SYSTEM

This section of the U.S. EPR FSAR is incorporated by reference with the following supplements.

© 2007-2009 UniStar Nuclear Services, LLC in and to the Reference COLA, namely all text not in brackets
© 2007-2009 Union Electric Company d/b/a AmerenUE in and to all Callaway site specific and
AmerenUE specific COLA material, namely all text in brackets.
All rights reserved. COPYRIGHT PROTECTED

8.2.1 DESCRIPTION

8.2.1.1 Offsite Power

The U.S. EPR FSAR includes the following COL Item in Section 8.2.1.1:

> A COL applicant that references the U.S. EPR design certification will provide site-specific information regarding the offsite transmission system and connections to the station switchyard.

This COL Item is addressed as follows:

{The Callaway Plant is connected to the AmerenUE transmission system by three transmission lines.

- Two 345 kV, 1800 MVA circuits on common steel towers connect the Callaway Plant Unit 2 switchyard directly to the Montgomery Substation in Montgomery County to the northeast (circuits MTGY-CAL-7 and MTGY-CAL-8).
- Two 345 kV, 1800 MVA circuits on common steel towers connect the Callaway Plant Unit 1 switchyard directly to the Bland Substation in Gasconade County to the south (circuits CAL-BLAN-1 and CAL-BLAN-2).
- One 345 kV, 1800 MVA circuit connects the Callaway Plant Unit 1 switchyard directly to the Loose Creek Substation in Osage County to the southwest (CAL-LSCR-3).

The Montgomery, Bland, and Loose Creek Substations are part of the AmerenUE transmission network as described in Callaway Plant Unit 2 FSAR Section 8.1.1. The Montgomery and Bland 345 kV circuits are each installed on double-circuit steel-tower structures. The Loose Creek line is installed on wooden H-frame structures.

The circuits from the plant site northeast to the Montgomery Substation are approximately 23 mi (37 km) in length. The first segment of the line runs northeasterly on a 200 ft (61 m) right-of-way (ROW) to a junction with the Montgomery-Guthrie 161 kV transmission line where it is then routed on a 150 ft (46 m) ROW parallel to the Montgomery-Guthrie line. It continues to the Montgomery Substation, crossing the 161 kV line to enter from the west.

The circuits from the plant site south to the Bland Substation are approximately 32 mi (51.5 km) in length and are routed on a 200 ft (61 m) ROW, except for a portion which parallels a Central Electric Power Cooperative 161 kV line on a 150 ft (46 m) wide right-of-way. The line crosses the Missouri and Gasconade Rivers. Two 69 kV and two 161 kV transmission lines are also crossed in passage.

The circuit from the plant site south to Loose Creek Substation is approximately 17 mi (27.4 km) in length and is routed on a 150 ft (46 m) extension of the CAL-BLAN ROW for 6.7 mi (10.8 km), crossing the Missouri River, before diverging to the southwest on a dedicated 150 ft (46 m) ROW.

The transmission lines are not subject to any unusual conditions, and construction is consistent with AmerenUE's established practices. The transmission lines and their associated structures interconnecting the plant and the three substations with the transmission system are designed to successfully withstand the loading requirements for environmental conditions prevalent in the area related to terrain, soils, wind, temperature, lightning, and floods, to minimize the possibility of failure.

© 2007-2009 UniStar Nuclear Services, LLC in and to the Reference COLA, namely all text not in brackets
© 2007-2009 Union Electric Company d/b/a AmerenUE in and to all Callaway site specific and
AmerenUE specific COLA material, namely all text in brackets.
All rights reserved. COPYRIGHT PROTECTED

This arrangement provides two physically-separated offsite power sources to Callaway Plant comprised of five 345 kV circuits. The CAL-BLAN circuits and the CAL-LSCR circuit form one preferred offsite power source for the Callaway Plant, with the MTGY-CAL circuits forming the second. The nearest point between these two sources is where the Loose Creek and Montgomery lines attach to their respective switchyard termination structures. The distance between the centerline of these lines at this point is approximately 1550 ft (472 m). An overview of these transmission lines is provided in Figure 8.1-1.

The Callaway Plant Unit 2 switchyard is connected to the Callaway Plant Unit 1 switchyard by two 345 kV, 1800 MVA circuits routed on common steel towers. These circuits are approximately 1 mi (1.6 km) in length and are contained entirely on AmerenUE property.

Two physically independent circuits that minimize the likelihood of their simultaneous failure under operational and environmental conditions and postulated events are provided to Callaway Plant Unit 2 by the switchyard connecting circuits and the MTGY-CAL circuits. The nearest distance between a switchyard connecting circuit and a MTGY-CAL line is the point where they attach to the switchyard termination structures. The distance between the centerline of these lines at this point is approximately 250 ft (76 m).

Design details of the seven 345 kV circuits described above are given in the Table 8.2-1. Figure 8.2-1 depicts the 345 kV transmission line configurations.}

The U.S. EPR FSAR includes the following COL Item in Section 8.2.1.1:

> A COL applicant that references the U.S. EPR design certification will provide site-specific information regarding the communication agreements and protocols between the station and the transmission system operator, independent system operator, or reliability coordinator and authority. Additionally, the applicant will provide a description of the analysis tool used by the transmission operator to determine, in real time, the impact that the loss or unavailability of various transmission system elements will have on the condition of the transmission system to provide post-trip voltages at the switchyard. The information provided will be consistent with information requested in NRC generic letter 2006-02.

This COL Item is addressed as follows:

{The Callaway site lies within the service territory of AmerenUE. Midwest Independent System Operator (MISO) is the Transmission Provider and Reliability Coordinator for the region containing AmerenUE's service territory. AmerenUE operates its transmission facilities as a balancing authority under the direction and control of MISO.

Formal agreements are established between AmerenUE, MISO and Callaway Plant to provide reliable operation of the transmission system connected to Callaway Plant. These agreements establish requirements for transmission system parameters, operation, and analysis, as well as establishing protocols for communications between these entities.

As a part of these agreements AmerenUE and MISO perform both seasonal (winter and summer) and real time grid analyses. The frequency and type of studies to be performed, as well as the required transmission system operation criteria are outlined in the agreements and are in accordance with Federal Energy Regulatory Commission (FERC) reliability standards, MISO and AmerenUE standards, regional practices and the Callaway Plant Transmission Owner Agreement.

© 2007-2009 UniStar Nuclear Services, LLC in and to the Reference COLA, namely all text not in brackets
© 2007-2009 Union Electric Company d/b/a AmerenUE in and to all Callaway site specific and
AmerenUE specific COLA material, namely all text in brackets.
All rights reserved. COPYRIGHT PROTECTED

The reliability of the AmerenUE system is continuously (real time) analyzed by both AmerenUE and MISO. AmerenUE uses power system analysis programs along with a state estimator to evaluate the strength of the transmission system and identify contingencies which could pose a threat to the system. This allows operators to react to strengthen the transmission system where needed. Operational planning studies are also performed using Power System State Estimation (PSSE) program, an offline power flow study tool. PSSE is used for analysis of near term operating conditions under varying load, generation, and transmission topology patterns.

The agreements between AmerenUE, MISO and Callaway Plant also establish protocols for communications so that Callaway Plant remains cognizant of grid vulnerabilities to make informed decisions regarding reliability and operability of the offsite power supply. Callaway Plant reviews the transmission system parameters and informs AmerenUE prior to initiating any plant activities that may affect grid reliability. In addition, plant operators inform AmerenUE of changes in generation ramp rates and notify them of any developing problems that may impact generation. AmerenUE then conveys any pertinent information to MISO.

Initial planning of the addition of a large generating unit such as Callaway Plant Unit 2 requires completion of the MISO Large Generator Interconnection Procedure (Large Generator Interconnect Agreement MISO). Studies performed as part of this procedure evaluate the transmission system to MISO and AmerenUE standards. The study identifies any transmission system modifications required to accommodate the additional generating unit (combined turbine-generator-exciter) and the main step-up transformers including modifications to substations and switchyards.}

8.2.1.2 Station Switchyard

The U.S. EPR FSAR includes the following COL Item in Section 8.2.1.2:

> A COL applicant that references the U.S. EPR design certification will provide site-specific information for the switchyard layout design.

This COL Item is addressed as follows:

{The 345 kV air insulated switchyard for Callaway Plant Unit 2 has been designed and is sized and configured along with the existing Callaway Plant Unit 1 switchyard to accommodate the output of both Callaway Units 1 and 2. The location of this switchyard is on the Callaway site approximately 350 ft (107 m) southwest of Callaway Plant Unit 2 and 700 ft (213 m) to the northwest of the existing Callaway Plant Unit 1 345 kV switchyard. The two 345 kV switchyards are interconnected by overhead lines and transmit electrical power output from Callaway Plant to the AmerenUE transmission system. The Callaway Plant Unit 2 switchyard layout and location are shown on Figure 8.2-1.

A schematic of the Callaway Plant Unit 2 switchyard layout design, which incorporates a breaker and a half scheme, is presented in Figure 8.2-2. Circuit breakers are rated in accordance with IEEE Standard C37.06 (IEEE, 2000). Circuit breakers are equipped with dual trip coils. The 345 kV circuit breakers in the switchyard are rated according to the following criteria.

- Circuit breaker continuous current ratings are chosen such that no single contingency in the switchyard (e.g., a breaker being out for maintenance) will result in a load exceeding 100% of the nameplate continuous current rating of the breaker.

- Interrupting duties are specified such that no fault occurring on the system while operating in steady-state conditions will exceed the breaker's nameplate interrupting capability.

© 2007-2009 UniStar Nuclear Services, LLC in and to the Reference COLA, namely all text not in brackets
© 2007-2009 Union Electric Company d/b/a AmerenUE in and to all Callaway site specific and
AmerenUE specific COLA material, namely all text in brackets.
All rights reserved. COPYRIGHT PROTECTED

- Short Time ratings are specified such that no fault occurring on the system while operating in steady-state conditions will exceed the switch's nameplate short time rating.

- Voltage ratings are specified to be greater than the maximum expected operating voltage.

The design of the Callaway Plant Unit 2 switchyard includes six bays in a breaker-and-a-half configuration. The breaker-and-a-half switchyard arrangement offers the operating flexibility to maintain the anticipated operational containment integrity and other vital functions in the event of a postulated accidents as described in the Failure Modes and Effects Analysis (FMEA) (Section 8.2.2.4). Some of the specific advantages of the breaker-and-a-half switchyard arrangement are as follows.

- Any transmission line into the switchyard can be cleared under either normal or fault conditions without affecting any other transmission line or bus.

- Either bus can be cleared under normal or fault conditions without interruption of any transmission line or the other bus.

- Any circuit breaker can be isolated for maintenance or inspection without interruption of any transmission line or bus.

- A fault in a tie breaker or failure of the breaker to trip for a line or generator fault results only in the loss of its two adjacent circuits until it can be isolated by disconnect switches.

- A fault in a bus side breaker or failure of the breaker to trip for a line or generator fault results only in the loss of the adjacent circuits and the adjacent bus until it can be isolated by disconnect switches.}

The U.S. EPR FSAR includes the following COL Item in Section 8.2.1.2:

> A COL applicant that references the U.S. EPR design certification will provide site-specific information regarding indication and control of switchyard components.

This COL Item is addressed as follows:

{A control house is located within the Callaway Plant Unit 2 switchyard to support control and protection requirements. Control power for switchyard breakers required to connect or disconnect any components of Callaway Plant Unit 2 from the transmission system is provided by the switchyard batteries. There is a redundant set of batteries located inside the Callaway Plant Unit 2 switchyard control house. Switchyard breakers operate to clear a fault on any auxiliary transformer and for system faults such as bus differential or breaker failure. A switchyard DC system under voltage condition is alarmed in the main control room.

Administrative control of the switchyard breakers is shared between Callaway Plant Unit 2, AmerenUE and MISO. The circuit breakers are controlled remotely from the main control room or by the system load dispatcher. Local tripping control is also provided at the circuit breakers. Disconnect switches are provided to individually isolate each circuit breaker from the switchyard bus and associated lines. This permits individual breaker maintenance and testing to proceed while the switchyard and lines remain energized.}

© 2007-2009 UniStar Nuclear Services, LLC in and to the Reference COLA, namely all text not in brackets
© 2007-2009 Union Electric Company d/b/a AmerenUE in and to all Callaway site specific and
AmerenUE specific COLA material, namely all text in brackets.
All rights reserved. COPYRIGHT PROTECTED

The U.S. EPR FSAR includes the following COL Item in Section 8.2.1.2:

> A COL applicant that references the U.S. EPR design certification will provide site-specific information for the protective devices that control the switchyard breakers and other switchyard relay devices.

This COL Item is addressed as follows:

{Electrical protection of circuits from the Callaway Plant Unit 2 switchyard is provided by a primary and secondary relaying scheme. The current input for the protective relaying schemes come from separate sets of circuit breaker bushing current transformers. Also, the control power for primary and secondary relaying schemes is supplied from redundant switchyard 125 VDC battery systems. These schemes are used for the following:

- The scheme is used on each of the five 345 kV transmission circuits from the Callaway Plant Unit 1 and Unit 2 345 kV switchyards to the AmerenUE grid. The potential input for the primary and secondary transmission circuit relaying systems is supplied from fused branch circuits originating from a set of oil filled or coupling capacitor type potential devices connected to the associated transmission circuit.

- The switchyard buses use a primary and backup scheme. The zone of protection of each 345 kV bus includes the 345 kV circuit breakers adjacent to the protected bus.

- Line protection for the Main Step-Up (MSU) transformer and auxiliary transformers use primary and backup schemes.

In addition to the above described relaying systems, each of the 345 kV circuit breakers has an associated circuit breaker failure relaying system. A circuit breaker failure scheme is provided in the unlikely event a circuit breaker fails to trip. If a breaker fails to open coincident with a line fault, tripping of all breakers adjacent to the failed breaker will occur. If the failed breaker is the center breaker, then only the remaining bus breaker will trip resulting in the undesired loss of the other line in the bay. If the failed breaker is a bus breaker then all breakers connected to the same bus will be tripped which may or may not result in loss of other lines. Assuming all bus and center breakers are normally closed, the remaining bus will continue to supply all line or transformer elements.

For the two 125 VDC batteries located in the Callaway Plant Unit 2 345 kV switchyard control house, each battery has its own battery charger. Each battery charger is connected to separate 480 VAC distribution panel boards also located in the control house. The switchyard 125 VDC battery systems are independent of the Callaway Plant Unit 2 non-Class 1E and Class 1E battery systems.}

8.2.1.3 Transformer Area

No departures or supplements.

8.2.2 ANALYSIS

No departures or supplements.

8.2.2.1 Compliance with GDC 2

No departures or supplements.

© 2007-2009 UniStar Nuclear Services, LLC in and to the Reference COLA, namely all text not in brackets
© 2007-2009 Union Electric Company d/b/a AmerenUE in and to all Callaway site specific and
AmerenUE specific COLA material, namely all text in brackets.
All rights reserved. COPYRIGHT PROTECTED

8.2.2.2 Compliance with GDC 4

No departures or supplements.

8.2.2.3 Compliance with GDC 5

No departures or supplements.

8.2.2.4 Compliance with GDC 17

The U.S. EPR FSAR includes the following COL Item in Section 8.2.2.4:

> A COL applicant that references the U.S. EPR design certification will provide a site-specific grid stability analysis. The results of the analysis will demonstrate that:
>
> - The PPS is not degraded below a level that will activate EPSS degraded grid protection actions after any of the following single contingencies:
> - U.S. EPR turbine generator trip.
> - Loss of the largest unit supplying the grid.
> - Loss of the largest transmission circuit or inter-tie.
> - Loss of the largest load on the grid.
> - The transmission system will not subject the reactor coolant pumps to a sustained frequency decay of greater than 3.5 Hz/sec as bounded by the decrease in reactor coolant system flow rate transient and accident analysis described in Section 15.3.2.

This COL Item is addressed as follows:

{A system impact study, MISO Project G733 (MISO, 2007) analyzed load flow, transient stability and fault analysis for the addition of Callaway Plant Unit 2 as part of the MISO Large Generator Interconnection Procedure. The study was prepared using AmerenUE's planning criteria against the 2017 winter and summer loading and identified the system upgrades necessary to maintain the reliability of the transmission system. The study criteria are based upon AmerenUE planning procedures, MISO procedures and Regional Reliability criteria. All previous active queues are modeled in the study. For the short circuit analysis all units are modeled as operating: for the load flow analysis peak loading is utilized with a large variety of scenarios. These cases are re-run every time a new queue is placed in the system.

The computer analysis was performed using the Siemens Power Technology International Software PSSE. The analysis examined conditions involving many scenarios including loss of the largest generating unit, loss of the most critical transmission line, and multiple facility contingencies. The study also examined the import / export power flows between utilities. The model used in the analysis was based on the current MISO generation and interconnection queue.

The results of the study conclude that with the additional generating capacity of Callaway Plant Unit 2 the transmission system remains stable under the analyzed conditions, preserving the grid connection, and supporting the normal and shutdown requirements of Callaway Plant Unit 2.

© 2007-2009 UniStar Nuclear Services, LLC in and to the Reference COLA, namely all text not in brackets
© 2007-2009 Union Electric Company d/b/a AmerenUE in and to all Callaway site specific and
AmerenUE specific COLA material, namely all text in brackets.
All rights reserved. COPYRIGHT PROTECTED

Modifications were made to the existing Bland substation as a result of the study. This consisted of completing a breaker-and-a-half scheme at the Bland Substation. New transmission infrastructure was also needed. These changes consisted of routing a new line from a tie point on an existing 345 kV transmission line approximately 6.7 (10.8 km) miles south of Callaway Plant to the Callaway Plant Unit 1 switchyard. This resulted in a new 345 kV transmission line from the Loose Creek Substation to the Callaway Plant Unit 1 switchyard. The new portion of this line was routed adjacent to the existing Callaway-Bland lines. An additional easement of 150 ft (46 m) was required over the existing 200 ft (61 m) easement. This new Callaway-Loose Creek line allowed the existing Callaway-Bland line to be restored as originally designed. No other modifications or upgrades to existing switchyards or substations were required. Additional changes to the existing transmission system were to route the Callaway-Montgomery lines 7 and 8 into the Unit 2 switchyard from the Unit 1 switchyard and install two lines from the Unit 1 switchyard to the Unit 2 switchyard to tie the two switchyards together.

Based on the results of the impact study the grid will not be lost due to the loss of the largest generating unit (i.e., Callaway Plant Unit 2), the loss of the most critical transmission line, or the loss of the largest load on the grid. The design (i.e., tap range & bus regulation voltage setting) of the on-load tap changers for each Emergency Auxiliary Transformer (EAT) ensures that the downstream EPSS 6.9 kV buses have sufficient voltage to preclude the degraded voltage protection scheme from separating the buses from the preferred power source, as described in U.S. EPR FSAR Section 8.3.1.1.3.

Grid availability is contingent on performance of the 345 kV circuits supplying the Callaway Plant Unit 2 Switchyard. These circuits are connected to three substations in the integrated system.

The power supply from the grid to the Montgomery, Bland and Loose Creek 345 kV Substations (the major transmission substations supplying the offsite power) is designed to assure that for the loss of a single element (generator, circuit, tower line, transformer, bus, etc.) the system will operate without loss of load, with no lines loaded above emergency ratings, and without having any excessively low voltages.

Transmission grid availability on the AmerenUE system has historically demonstrated a very high degree of reliability. AmerenUE's transmission system has multiple interconnections to various neighboring transmission grids as described in Section 8.1.1. Offsite power from the AmerenUE transmission system has been available without loss of power for the past 20 years. In view of the applied system design and based on past performance of the transmission system, uninterrupted transmission grid availability necessary to meet all requirements is projected over the life of Callaway Plant Unit 2.

The MISO grid is maintained at 60 Hz. During a system under frequency condition an automatic load shedding scheme is used which will drop loads to preserve transmission system integrity in accordance with AmerenUE operating procedures and FERC requirements.

A review of the transmission grid frequency data for the last five years indicates that the maximum frequency decay rate during disturbances was less than 3.5 Hz/sec. Agreements between AmerenUE and Callaway Plant require grid frequency decay calculations to be performed periodically, the last of which (October 31, 2006) shows the maximum theoretical frequency decay rate to be 2.231 Hz/sec. As such, the reactor coolant pumps are not expected to be subject to a sustained frequency decay rate greater than 3.5 Hz/sec.

© 2007-2009 UniStar Nuclear Services, LLC in and to the Reference COLA, namely all text not in brackets
© 2007-2009 Union Electric Company d/b/a AmerenUE in and to all Callaway site specific and
AmerenUE specific COLA material, namely all text in brackets.
All rights reserved. COPYRIGHT PROTECTED

A system voltage study was performed to determine the maximum and minimum voltage that the switchyard can maintain without any reactive support from Callaway Plant Unit 2. This voltage study was performed as a part of the MISO system impact study (MISO 2007).

The results of the study conclude that the Callaway Plant Unit 2 switchyard 345 kV bus operates within an acceptable voltage range to satisfy operating agreement for Callaway Plant.

The U.S. EPR FSAR states that the plant will operate with a transmission system operating voltage range of +10%. However, based on the above site specific voltage study Callaway Plant Unit 2 may be designed to operate with a -5%, +10% transmission system operating voltage range.

Failure Mode and Effects Analysis

A failure mode and effects analysis (FMEA) of the switchyard components has been performed to assess the possibility of simultaneous failure of both circuits for Callaway Plant Unit 2 as a result of single events, such as a breaker not operating during fault conditions, a spurious relay trip, a loss of a control circuit power supply, or a fault in a switchyard bus or transformer. This FMEA supplements the FMEA described in U.S. EPR FSAR Section 8.2.2.4.

The 345 kV components addressed in this FMEA are as follows and a summary of the results of this FMEA is presented below.

- Transmission System
- Transmission Line Towers
- Transmission Line Conductors
- Switchyard
- Circuit Breakers
- Disconnect Switches

Transmission System Failure Mode Evaluation

The offsite power system is designed and built with sufficient capacity and capability to assure that design limits and design conditions, relative to the offsite power system, maintain their function in the event of a postulated accident.

The transmission system associated with the Callaway Plant Unit 2 is designed and constructed so that no loss of offsite power to the 345 kV switchyard is experienced with the occurrence of any of the following events:

- Loss of one transmission circuit, or transmission line if two circuits are routed on common towers.
- Loss of any one transmission circuit and generator
- Loss of a generator
- A three phase fault occurring on any transmission circuit which is cleared by primary or backup relaying

© 2007-2009 UniStar Nuclear Services, LLC in and to the Reference COLA, namely all text not in brackets
© 2007-2009 Union Electric Company d/b/a AmerenUE in and to all Callaway site specific and
AmerenUE specific COLA material, namely all text in brackets.
All rights reserved. COPYRIGHT PROTECTED

The offsite electric power system supplies at least two preferred power lines to the Callaway Plant site, which are physically independent and separate. One preferred power source enters the site from the north and is connected to the Callaway Plant Unit 2 switchyard. The second preferred power source enters the site from the south and is connected to the Callaway Plant Unit 1 switchyard. The distance between these lines at the nearest point is approximately 1550 ft (472 m).

The Callaway Plant Unit 2 switchyard is electrically integrated with the Callaway Plant Unit 1 switchyard by two circuits approximately 1 mi (1.6 km) in length contained entirely on AmerenUE property. Two physically-separated preferred power sources to the Callaway Plant Unit 2 switchyard are provided by the aforementioned lines from the north and the inter-ties between the switchyards. The distance between these lines at the nearest point is approximately 250 ft (76 m).

The preferred power sources to both the Callaway Plant site and to Callaway Plant Unit 2 have been designed and located to minimize the likelihood of simultaneous failure under operating, postulated accident, and postulated adverse environmental conditions.

Transmission Line Tower Failure Mode Evaluation

The 345 kV towers outside of the Callaway Plant Unit 2, 345 kV, switchyard fence are designed and constructed using the same type of transmission tower design as the Callaway Plant Unit 1 towers, except that portions of the Loose Creek line uses wooden H-frame structures. These tower designs provide clearances consistent with the National Electrical Safety Code and AmerenUE engineering standards. Existing towers are grounded with either ground rods or a counterpoise ground system. New transmission line towers are constructed and grounded using the same methods.

Failure of any one tower or failure of any components within the tower structure, due to structural failure can at most disrupt and cause a loss of power distribution to only one preferred power source. Therefore, one of the preferred sources of power remains available for this failure mode in order to maintain the containment integrity and other vital functions in the event of a postulated accident.

Transmission Line Conductors Failure Mode Evaluation

The transmission lines will have conductors installed to the proper load carrying conductor size in order to accommodate the load associated with the Callaway Plant.

Existing 345 kV Callaway transmission lines are constructed to provide clearances consistent with the National Electrical Safety Code and AmerenUE engineering standards. At a minimum, clearances for high voltage conductors above grade would be equal to or exceed present clearance minimums. High voltage conductor span lengths are engineered to establish the required installation guidelines and tensions for each line. Transmission lines crossing roads and railroads comply with the National Electrical Safety Code and AmerenUE engineering standards. The new transmission lines are configured to preclude the crossing of other transmission lines.

Failure of a line conductor would cause the loss of one preferred source of power but not more than one. Therefore, a minimum of one preferred sources of power remains available for this failure mode in order to maintain the containment integrity and other vital functions in the event of a postulated accident.

© 2007-2009 UniStar Nuclear Services, LLC in and to the Reference COLA, namely all text not in brackets
© 2007-2009 Union Electric Company d/b/a AmerenUE in and to all Callaway site specific and
AmerenUE specific COLA material, namely all text in brackets.
All rights reserved. COPYRIGHT PROTECTED

Switchyard Failure Mode Evaluation

As indicated in Figure 8.2-2, a breaker and a half scheme is incorporated in the design of the Callaway Plant Unit 2 345 kV switchyard. The 345 kV equipment in the Callaway Plant Unit 2 switchyard is rated and positioned within the bus configuration according to the following criteria in order to maintain load flow for the unit.

- Equipment continuous current ratings are chosen such that no single contingency in the switchyard (e.g., a breaker being out of for maintenance) can result in current exceeding 100% of the continuous current rating of the equipment.
- Interrupting duties are specified such that no faults occurring on the system exceed the equipment rating.
- Short Time ratings are specified such that no fault occurring on the system exceeds the equipment Short Time rating.
- Voltage ratings are specified to be greater than the maximum expected operating voltage.

The breaker-and-a-half switchyard arrangement offers the following flexibility to control a failed condition within the switchyard.

- Any faulted transmission line into the switchyard can be isolated without affecting any other transmission line.
- Either bus can be isolated without interruption of any transmission line or other bus.

The switchyard also includes the following features to enhance reliability.

- Each battery charger is connected to a 480 VAC distribution panel board located in the 345 kV switchyard control house.
- A primary and secondary relaying system is included on each of the five 345 kV transmission circuits from the 345 kV switchyard to the AmerenUE grid. Relay schemes used for protection of the offsite power circuits and the switching station equipment include primary and backup protection features. Breakers are equipped with dual trip coils. Each protection circuit which supplies a trip signal is connected to a separate trip coil.
- Instrumentation and control circuits of the main power offsite circuit (i.e., normal preferred power circuit) are separated from the instrumentation and control circuits for the reserve power circuit (i.e., alternate preferred power circuit)
- The current input for the primary and secondary transmission circuit relaying systems is supplied from separate sets of circuit breaker bushing current transformers. The potential input for the primary and secondary transmission circuit relaying systems is supplied from fused branch circuits originating from a set of coupling capacitor potential devices connected to the associated transmission circuit. The control power for the primary and secondary transmission circuit relaying systems is supplied from separate 125 VDC systems.
- A primary and secondary relay system is included for protection of each of the 345 kV switchyard buses. The zone of protection of each 345 kV bus protection system

© 2007-2009 UniStar Nuclear Services, LLC in and to the Reference COLA, namely all text not in brackets
© 2007-2009 Union Electric Company d/b/a AmerenUE in and to all Callaway site specific and
AmerenUE specific COLA material, namely all text in brackets.
All rights reserved. COPYRIGHT PROTECTED

includes all the 345 kV circuit breakers adjacent to the protected bus. The primary relay is the instantaneous high impedance type used for bus protection to detect both phase and ground faults. This relay is connected in conjunction with auxiliary relays to form a differential protection, instantaneous auxiliary tripping relay system. The secondary relay system is a duplicate of the primary relay system.

- The current input for the primary and secondary 345 kV bus relaying systems is supplied from separate sets of 345 kV circuit breaker bushing current transformers. The control power for the relay terminals of the primary and secondary 345 kV bus relaying systems located in the 345 kV switchyard control house is supplied from separate 125 VDC systems.

- A primary and secondary relay system is included on each of the circuits connecting the Main Step Up (MSU) transformer, Emergency Auxiliary Transformer (EAT(s)) and the Normal Auxiliary Transformer (NAT(s)) to their respective 345 kV switchyard position. The zone of protection of each of the Main Power Transformers (MPT(s)) circuit connection protection system includes two associated circuit breakers at the 345 kV switchyard and the high side bushings of the MSU transformer. The secondary relay system is a duplicate of the primary relay system.

- The current input for the primary and secondary MSU transformer, EAT(s) and the NAT(s) circuit connection relaying systems are supplied from separate sets of 345 kV circuit breaker bushing current transformers, MSU, EAT(s) and the NAT(s) transformer bushing current transformers. The control power for the relay terminals of the primary and secondary MSU circuit connection relaying systems located in the 345 kV switchyard control house are supplied from separate 125 VDC systems. The control power for the relay terminals of the primary and secondary MSU, EAT(s) and NAT(s) circuit connection relaying systems located at the switchyard control building are supplied from the respective unit non-Class 1E 125 VDC battery systems.

- Spurious relay operation within the switchyard that trips the associated protection system will not impact any primary or backup system.

Therefore, a minimum of one preferred source of power remains available for this failure mode in order to maintain the containment integrity and other vital safety functions in the event of a postulated accident.

Circuit Breakers Failure Mode Evaluation

As indicated in Figure 8.2-2, a breaker-and-a-half scheme is incorporated in the design of the Callaway Plant Unit 2 345 kV switchyard. The Callaway Plant Unit 2 345 kV switchyard equipment is rated and positioned within the bus configuration according to the following criteria in order to maintain load flow incoming and outgoing from the units:

- Circuit breaker continuous current ratings are chosen such that no single contingency in the switchyard (e.g., a breaker being out for maintenance) will result in a load exceeding 100% of the nameplate continuous current rating of the breaker.

- Interrupting duties are specified such that no fault occurring on the system, while operating in steady-state conditions, will exceed the breaker's nameplate interrupting capability.

- Any circuit breaker can be isolated for maintenance or inspection without interruption of any transmission line or bus.

© 2007-2009 UniStar Nuclear Services, LLC in and to the Reference COLA, namely all text not in brackets
© 2007-2009 Union Electric Company d/b/a AmerenUE in and to all Callaway site specific and
AmerenUE specific COLA material, namely all text in brackets.
All rights reserved. COPYRIGHT PROTECTED

- A fault in a tie breaker or failure of the breaker to trip for a line or generator fault results only in the loss of its two adjacent circuits until it can be isolated by disconnect switches.

- A fault in a bus side breaker or failure of the breaker to trip for a line or generator fault results only in the loss of the adjacent circuits and the adjacent bus until it can be isolated by disconnect switches.

In addition to the above described 345 kV switchyard for Callaway Plant Unit 2 relaying systems, each of the 345 kV circuit breakers has a primary protection relay and a backup protection relay. The primary relay is a different type or manufacture from the backup relay. This precludes common mode failure issues with the protection relays.

The primary and secondary relaying systems for Callaway Plant Unit 2 345 kV switchyard are connected to separate trip circuits in each 345 kV circuit breaker. The control power provided for the 345 kV switchyard primary and secondary relaying protection and breaker control circuits consists of two independent 125 VDC systems.

Disconnect Switches Failure Mode Evaluation

The 345 kV disconnect switches have a Short Time rating higher than the available short circuit level. The disconnect switches are implemented into the switchyard configuration to isolate main power circuits that have failed or are out for maintenance. A failure of the disconnect switch results only in the loss of its adjacent circuit.

Therefore, a minimum of one preferred source of power remains available for this failure mode in order to maintain the containment integrity and other vital functions in the event of a postulated accident.

FMEA Conclusion

The finding of this FMEA analysis is that there are no single failures which would cause the simultaneous failure of both preferred sources of offsite power.}

8.2.2.5 Compliance with GDC 18

The U.S. EPR FSAR includes the following COL Item in Section 8.2.2.5:

> A COL applicant that references the U.S. EPR design certification will provide site-specific information for the station switchyard equipment inspection and testing plan.

This COL Item is addressed as follows:

{A working agreement which defines the interfaces and working relationships between Callaway Plant and AmerenUE is established to ensure the offsite power design requirements for the transmission facilities are maintained. The agreement defines the necessary requirements for maintenance, calibration, testing and modification of transmission lines, switchyards, and related equipment

For performance of maintenance, testing, calibration and inspection, AmerenUE follows its own field test manuals, vendor manuals and drawings, industry's maintenance practices and observes (FERC) requirements.

Regular inspections and maintenance of the transmission system and right-of-ways are performed. A patrol is performed twice annually of transmission corridors, while more comprehensive inspections are performed on a rotating 5 year schedule. Maintenance is

© 2007-2009 UniStar Nuclear Services, LLC in and to the Reference COLA, namely all text not in brackets
© 2007-2009 Union Electric Company d/b/a AmerenUE in and to all Callaway site specific and
AmerenUE specific COLA material, namely all text in brackets.
All rights reserved. COPYRIGHT PROTECTED

performed on an as-needed basis as dictated by the results of the line inspections and are generally performed on a 5 to 6 year rotating schedule for tree trimming with herbicide use on a 3 year as-needed schedule. Maintenance of the proposed onsite corridors including vegetation management will be implemented under existing AmerenUE programs in accordance with ANSI A300 (ANSI, 2001) (ANSI, 2006) standards to promote safety, reliability, and environmental benefit.

Multiple levels of inspection and maintenance are performed on the Callaway switchyards, as well as other substation facilities. This inspection and maintenance is as follows.

Walk-downs and visual inspections of each substation facility including, but not limited to, reading and recording of equipment counters and meters, site temperature and conditions, and equipment condition.

Protective relay system testing including visual inspection, calibration, verification of current and potential inputs, functional trip testing, and correct operation of relay communication equipment.

Oil sampling of large power transformers. Oil samples are evaluated through the use of gas chromatography and dielectric breakdown analysis.

Several levels of inspection and maintenance for power circuit breakers. The frequency of each is a function of the number of operations and the length of time in service. Maintenance leverages the use of external visual inspection of functional systems, an external test, and an internal inspection. Frequency of the various maintenance/inspection efforts is based on a combination of operating history of the type of breaker, industry practice and manufacturer's recommended maintenance requirements.

Thermography is used to identify potential thermal heating issues on buses, conductors, connectors and switches.

Maintenance of battery systems is performed, including visual inspections, verification of battery voltage, and verification of electrolyte level.}

8.2.2.6 Compliance with GDC 33, GDC 34, GDC 35, GDC 38, GDC 41, and GDC 44

No departures or supplements.

8.2.2.7 Compliance with 10 CFR 50.63

The U.S. EPR FSAR includes the following COL Item in Section 8.2.2.7:

> A COL applicant that references the U.S. EPR design certification will provide site-specific information that identifies actions necessary to restore offsite power and use available nearby power sources when offsite power is unavailable.

This COL Item is addressed as follows:

{Callaway Plant Unit 2} includes two redundant SBO diesel generators designed in accordance with 10 CFR 50.63 (CFR, 2008) and Regulatory Guide 1.155 (NRC, 1988). As such, reliance on additional offsite power sources as an alternate AC source is not required. {There are no special local power sources that can be made available to re-supply the plant following a loss of the offsite power grid or an SBO. However, actions necessary to restore offsite power are identified as part of the procedures and training provided to plant operators for an SBO event described in response to the COL Item in Section 8.4.2.6.4.}

© 2007-2009 UniStar Nuclear Services, LLC in and to the Reference COLA, namely all text not in brackets
© 2007-2009 Union Electric Company d/b/a AmerenUE in and to all Callaway site specific and
AmerenUE specific COLA material, namely all text in brackets.
All rights reserved. COPYRIGHT PROTECTED

8.2.2.8 Compliance with 10 CFR 50.65(a)(4)

No departures or supplements.

8.2.2.9 Compliance with Branch Technical Position 8-3

No departures or supplements.

8.2.2.10 Compliance with Branch Technical Position 8-6

No departures or supplements.

8.2.3 REFERENCES

{**ANSI, 2001**. Pruning Standard, A300 (PART 1), American National Standards Institute (ANSI), 2001.

ANSI, 2006. Integrated Vegetation Management Standard, A300 (PART 7), American National Standards Institute (ANSI), 2006.

CFR, 2008. Loss of All Alternating Current Power, Title 10, Code of Federal Regulations, Part 50.63, U.S. Nuclear Regulatory Commission, 2008.Callaway Plant Unit 2

IEEE, 2000. IEEE Standard for AC High-Voltage Circuit Breakers on a Symmetrical Current Basis – Preferred Ratings and Related Required Capabilities, IEEE Std. C37.06-2000, Institute of Electrical and Electronics Engineers, 2000.

MISO, 2007 MISO Project G733 Queue 39114-01 System Impact Study.

NRC, 1988. Station Blackout, Regulatory Guide 1.155, U.S. Nuclear Regulatory Commission, August 1988.}

© 2007-2009 UniStar Nuclear Services, LLC in and to the Reference COLA, namely all text not in brackets
© 2007-2009 Union Electric Company d/b/a AmerenUE in and to all Callaway site specific and
AmerenUE specific COLA material, namely all text in brackets.
All rights reserved. COPYRIGHT PROTECTED

Table 8.2-1— {AmerenUE Transmission System Circuits Connected to the Callaway Site}

SUBSTATION CIRCUIT	NOMINAL VOLTAGE	THERMAL CAPACITY	APPROXIMATE LENGTH
Montgomery Circuit MTGY-CAL-7	345kV	1800 MVA	23 mi (37 km)
Montgomery Circuit MTGY-CAL-8	345kV	1800 MVA	23 mi (37 km)
Bland Circuit CAL-BLAN-1	345kV	1800 MVA	32 mi (51 km)
Bland Circuit CAL-BLAN-2	345kV	1800 MVA	32 mi (51 km)
Loose Creek Circuit CAL-LSCR-2	345kV	1800 MVA	17 mi (27 km)
Switchyard Connecting Circuit 1	345kV	1800 MVA	1 mi (1.6 km)
Switchyard Connecting Circuit 2	345kV	1800 MVA	1 mi (1.6 km)

© 2007-2009 UniStar Nuclear Services, LLC in and to the Reference COLA, namely all text not in brackets
© 2007-2009 Union Electric Company d/b/a AmerenUE in and to all Callaway site specific and
AmerenUE specific COLA material, namely all text in brackets.
All rights reserved. COPYRIGHT PROTECTED

Figure 8.2-1—{Callaway Plant Layout}

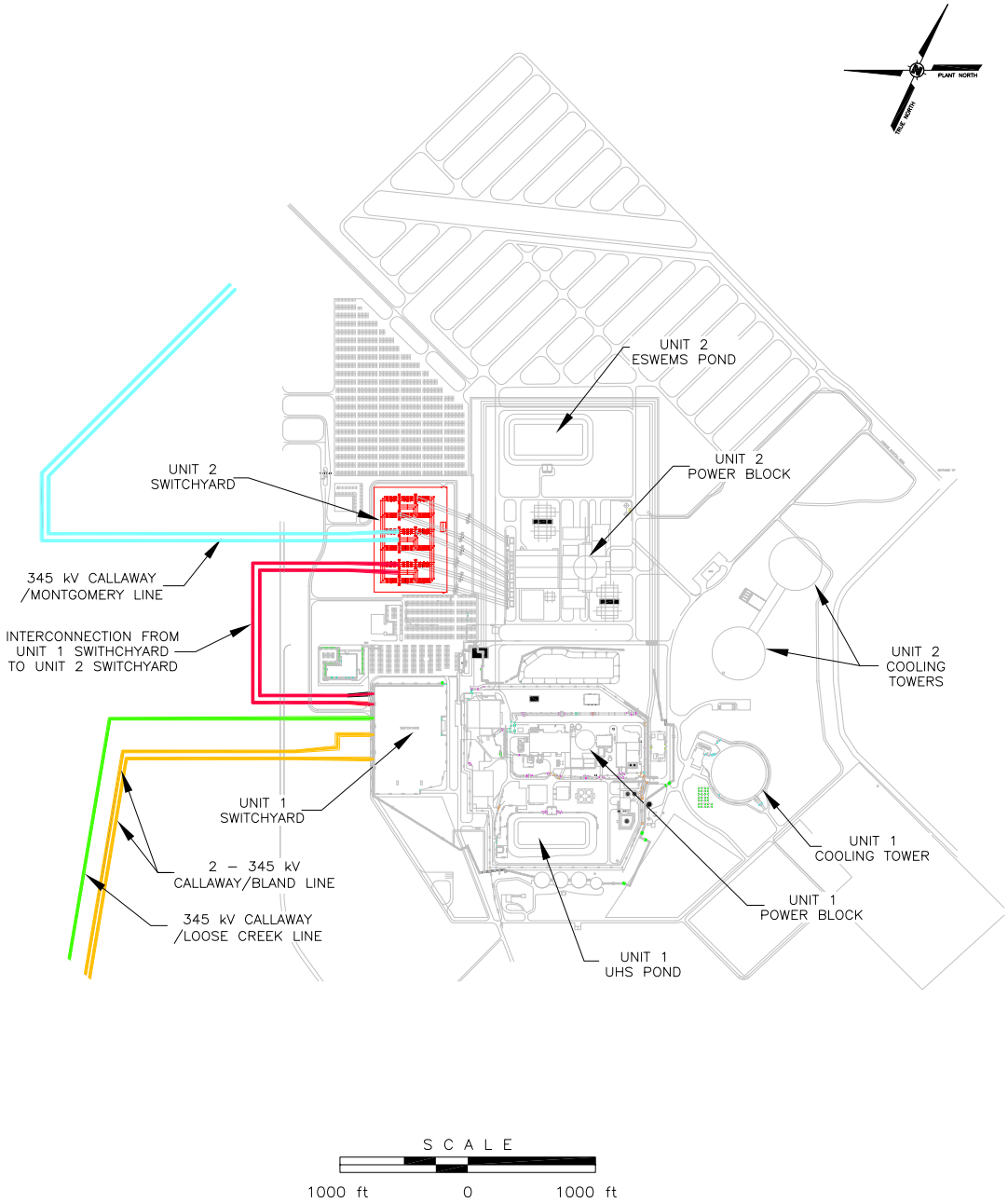

© 2007-2009 UniStar Nuclear Services, LLC in and to the Reference COLA, namely all text not in brackets
© 2007-2009 Union Electric Company d/b/a AmerenUE in and to all Callaway site specific and
AmerenUE specific COLA material, namely all text in brackets.
All rights reserved. COPYRIGHT PROTECTED

Figure 8.2-2—{Callaway Switchyard Single Line Diagram}

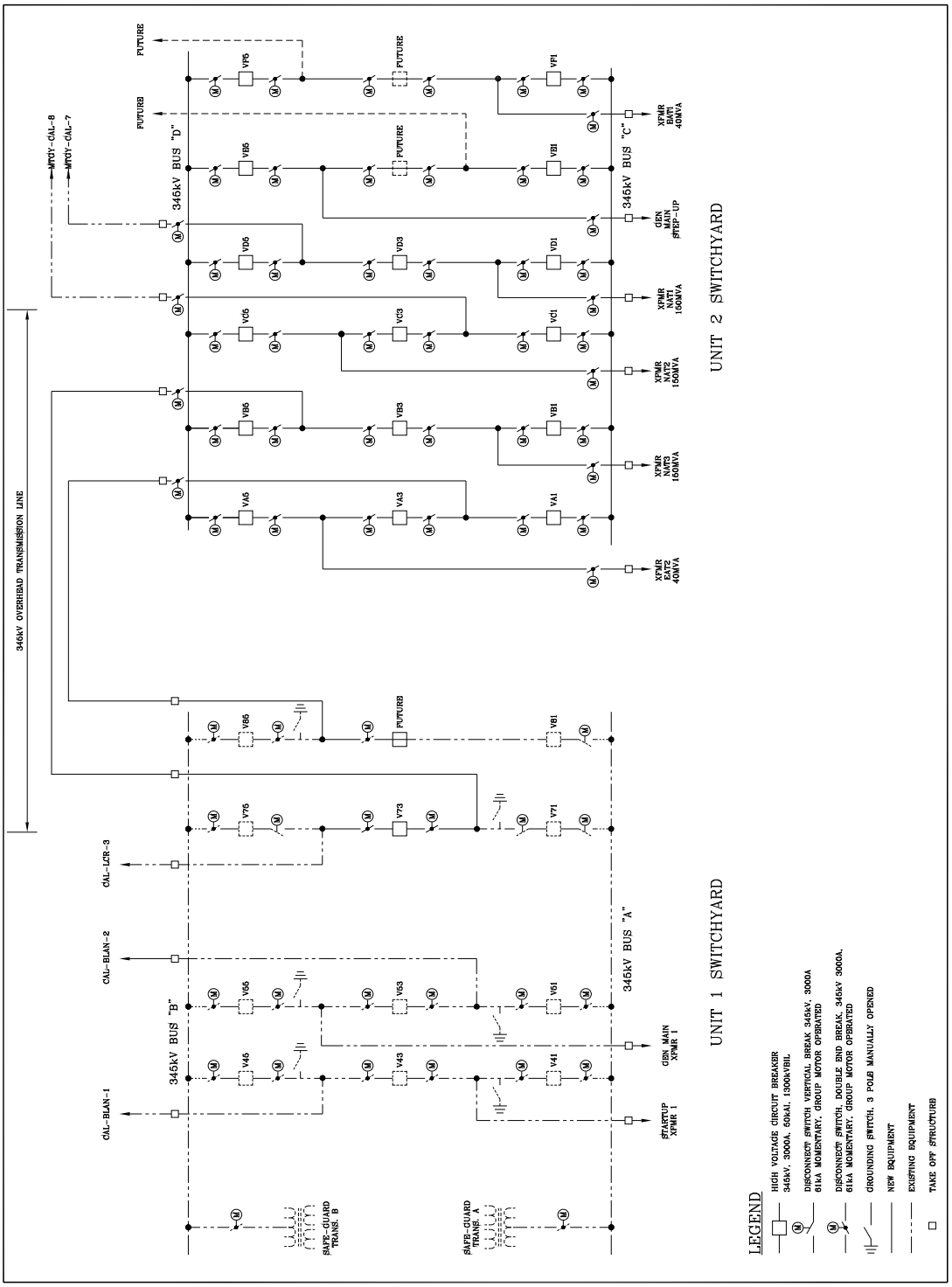

© 2007-2009 UniStar Nuclear Services, LLC in and to the Reference COLA, namely all text not in brackets
© 2007-2009 Union Electric Company d/b/a AmerenUE in and to all Callaway site specific and
AmerenUE specific COLA material, namely all text in brackets.
All rights reserved. COPYRIGHT PROTECTED

8.3 ONSITE POWER SYSTEM

This section of the U.S. EPR FSAR is incorporated by reference with the following supplements.

8.3.1 ALTERNATING CURRENT POWER SYSTEMS

8.3.1.1 Description

Additional site-specific loads powered from the station EDGs are specified in Table 8.1-1, Table 8.1-2, Table 8.1-3, and Table 8.1-4. These tables supplement the information provided in U.S. EPR FSAR Tables 8.3-4, 8.3-5, 8.3-6, and 8.3-7.

{Figure 8.3-1 through Figure 8.3-3 and Figure 8.3-4 through Figure 8.3-7} provide the site-specific modifications to the Emergency and Normal Power Supply Systems Single Line Diagrams. This information supplements U.S. EPR FSAR Figures 8.3-2 and 8.3-3. The site-specific load analysis is provided in Section 8.1.3.

Table 8.3-1 identifies the nominal ratings for the site-specific AC power system main components. This information supplements the U.S. EPR FSAR Table 8.3-1.

8.3.1.1.1 Emergency Power Supply System

{There are four divisions of Emergency Power Supply System (EPSS) distribution equipment for the Essential Service Water Emergency Makeup System (ESWEMS). The EPSS distribution equipment (Distribution Transformers and MCCs) for each train of the ESWEMS is located in the applicable division of Seismic Category 1 ESWEMS Pumphouse Electrical Room. Each Division is functionally independent and physically separated from the other divisions. The onsite AC power system component data nominal values are shown in Table 8.3-1.}

The site-specific EPSS distribution switchgear and nominal bus voltages are shown in Table 8.3-2. This information supplements U.S. EPR FSAR Table 8.3-2.

8.3.1.1.2 Normal Power Supply System

{The site-specific Normal Power Supply System major distribution switchgear and nominal bus voltages are shown in Table 8.3-3. U.S. EPR FSAR Table 8.3-3 lists 480 VAC Load Centers 35BFB, 35BFC, and 35BFD for Train 5, and 480 VAC Load Centers 36BFB, 36BFC and 36BFD for Train 6. These 480 VAC Load Centers are deleted in the site-specific design.}

8.3.1.1.3 Electric Circuit Protection and Coordination

No departures or supplements.

8.3.1.1.4 Onsite AC Power System Controls and Instrumentation

No departures or supplements.

8.3.1.1.5 Standby AC Emergency Diesel Generators

The U.S. EPR FSAR includes the following COL Item in Section 8.3.1.1.5:

> A COL applicant that references the U.S. EPR design certification will monitor and maintain EDG reliability during plant operations to verify the selected reliability level target is being achieved as intended by RG 1.155.

This COL Item is addressed as follows:

© 2007-2009 UniStar Nuclear Services, LLC in and to the Reference COLA, namely all text not in brackets
© 2007-2009 Union Electric Company d/b/a AmerenUE in and to all Callaway site specific and
AmerenUE specific COLA material, namely all text in brackets.
All rights reserved. COPYRIGHT PROTECTED

{AmerenUE} shall monitor and maintain EDG reliability to verify the selected reliability level goal of 0.95 is being achieved as intended by Regulatory Guide 1.155 (NRC, 1988).

8.3.1.1.6 Station Blackout Diesel Generators

No departures or supplements.

8.3.1.1.7 Electrical Equipment Layout

{The electrical distribution system components distribute power to safety-related and non-safety-related site-specific loads located throughout the site.

The EPSS 6.9 kV- 480 VAC transformers and 480 VAC MCCs for each train of the ESWEMS are located in the applicable division of the Seismic Category I ESWEMS Pumphouse Electrical Room.}

8.3.1.1.8 Raceway and Cable Routing

{The EPSS distribution equipment for each train of the ESWEMS is located in the applicable division of the Seismic Category I ESWEMS Pumphouse.}

8.3.1.1.9 Independence of Redundant Systems

{Each train of the ESWEMS is electrically fed by dedicated EPSS distribution equipment located If thin the applicable division of the Seismic Category I ESWEMS Pumphouse.}

8.3.1.1.10 Containment Electrical Penetrations

No departures or supplements.

8.3.1.1.11 Criteria for Class 1E Motors

No departures or supplements.

8.3.1.1.12 Overload Protection for Motor-Operated Safety-Related Valves

No departures or supplements.

8.3.1.1.13 Physical Identification of Safety-Related Equipment

No departures or supplements.

8.3.1.2 Analysis

No departures or supplements.

8.3.1.2.1 Compliance with GDC 2

No departures or supplements.

8.3.1.2.2 Compliance with GDC 4

No departures or supplements.

8.3.1.2.3 Compliance with GDC 5

No departures or supplements.

© 2007-2009 UniStar Nuclear Services, LLC in and to the Reference COLA, namely all text not in brackets
© 2007-2009 Union Electric Company d/b/a AmerenUE in and to all Callaway site specific and
AmerenUE specific COLA material, namely all text in brackets.
All rights reserved. COPYRIGHT PROTECTED

8.3.1.2.4 Compliance with GDC 17

{The EPSS distribution equipment for each train of the Essential Service Water Emergency Makeup System (ESWEMS) is located in the applicable division of the Seismic Category I ESWEMS Pumphouse Electrical Room. Each division is functionally independent and physically separated from the other divisions.}

8.3.1.2.5 Compliance with GDC 18

No departures or supplements.

8.3.1.2.6 Compliance with GDC 33, GDC 34, GDC 35, GDC 38, GDC 41, and GDC 44

No departures or supplements.

8.3.1.2.7 Compliance with GDC 50

No departures or supplements.

8.3.1.2.8 Compliance with 10 CFR 50.63

No departures or supplements.

8.3.1.2.9 Compliance with 10 CFR 50.65(a)(4)

No departures or supplements.

8.3.1.2.10 Compliance with 10 CFR 50.34 Pertaining to Three Mile Island Action Plan Requirements

No departures or supplements.

8.3.1.2.11 Branch Technical Positions

No departures or supplements.

8.3.1.3 Electrical Power System Calculations and Distribution System Studies for AC Systems

The U.S. EPR FSAR includes the following conceptual design information in Section 8.3.1.3:

Figure 8.3-4 [[Typical Station Grounding Grid]]

The conceptual design information is addressed as follows:

{The U.S. EPR FSAR Figure 8.3-4 is incorporated by reference with the supplemental information as shown in the clouded areas in Figure 8.3-8}.

8.3.2 DC POWER SYSTEMS

No departures or supplements.

8.3.3 REFERENCES

{NRC, 1988. Station Blackout, Regulatory Guide 1.155, U.S. Nuclear Regulatory Commission, August 1988.}

© 2007-2009 UniStar Nuclear Services, LLC in and to the Reference COLA, namely all text not in brackets
© 2007-2009 Union Electric Company d/b/a AmerenUE in and to all Callaway site specific and
AmerenUE specific COLA material, namely all text in brackets.
All rights reserved. COPYRIGHT PROTECTED

Table 8.3-1—{Onsite AC Power System Component Data Nominal Values}

Component	Nominal Ratings
EPSS Distribution Transformers	Dry Type
31BMT05, 32BMT05	60 Hz, three phase, air cooled
33BMT05, 34BMT05	6.9 kV to 480 V
	500 kVA

© 2007-2009 UniStar Nuclear Services, LLC in and to the Reference COLA, namely all text not in brackets
© 2007-2009 Union Electric Company d/b/a AmerenUE in and to all Callaway site specific and
AmerenUE specific COLA material, namely all text in brackets.
All rights reserved. COPYRIGHT PROTECTED

Table 8.3-2—{EPSS Switchgear, Load Center, and Motor Control Center Numbering and Nominal Voltage}

Nominal Voltage Level	Division	Switchgear / Load Center / Motor Control Center
480 V MCC	1	31BNG01[1]
480 V MCC	2	32BNG01[1]
480 V MCC	3	33BNG01[1]
480 V MCC	4	34BNG01[1]

Note

[1] Equipment located in the respective division in the ESWEMS Electrical Building.

© 2007-2009 UniStar Nuclear Services, LLC in and to the Reference COLA, namely all text not in brackets
© 2007-2009 Union Electric Company d/b/a AmerenUE in and to all Callaway site specific and
AmerenUE specific COLA material, namely all text in brackets.
All rights reserved. COPYRIGHT PROTECTED

Table 8.3-3—{NPSS Switchgear and Load Center Numbering and Nominal Voltage}

Nominal Voltage Level	Train	Bus / Load Center(2)
480V Load Center	5	35BFA(1), 35BFE(1)
480V Load Center	6	36BFA(1), 36BFE(1), 36BFF(1)

(1) Equipment Located in the Circulating Water System Cooling Tower Area.
(2) U.S. EPR FSAR Table 8.3-3 lists 480 VAC Load Centers 35BFB, 35BFC, and 35BFD for Train 5, and 480 VAC Load Centers 36BFB, 36BFC, and 36BFD for Train 6. These 480 VAC Load Centers are unnecessary due to the utilization of natural draft cooling towers rather than wet fans.

© 2007-2009 UniStar Nuclear Services, LLC in and to the Reference COLA, namely all text not in brackets
© 2007-2009 Union Electric Company d/b/a AmerenUE in and to all Callaway site specific and
AmerenUE specific COLA material, namely all text in brackets.
All rights reserved. COPYRIGHT PROTECTED

Figure 8.3-1—{Emergency Power Supply System Single Line Drawing - Sheet 1 of 3}

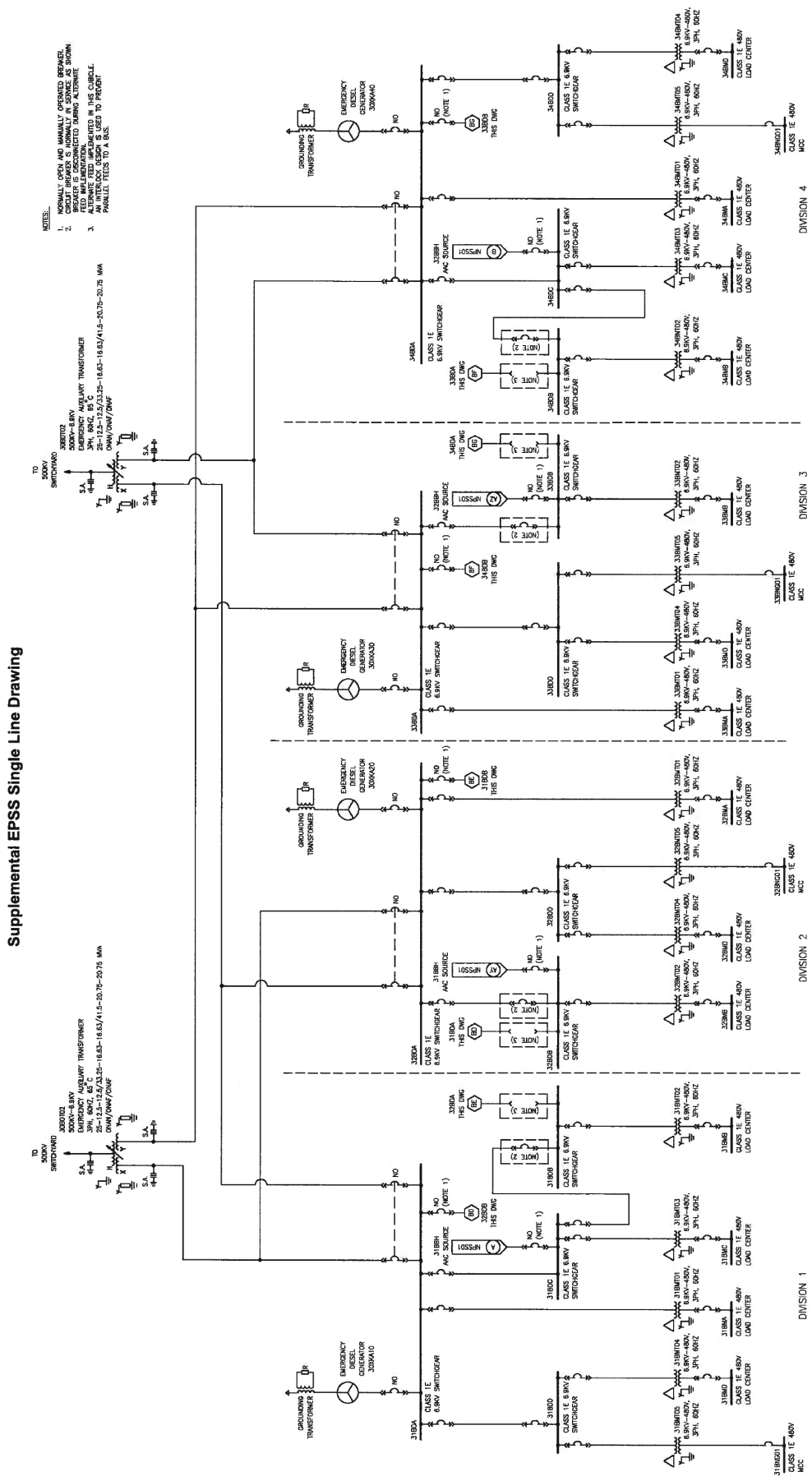

© 2007-2009 UniStar Nuclear Services, LLC in and to the Reference COLA, namely all text not in brackets
© 2007-2009 Union Electric Company d/b/a AmerenUE in and to all Callaway site specific and
AmerenUE specific COLA material, namely all text in brackets.
All rights reserved. COPYRIGHT PROTECTED

Figure 8.3-2—{Emergency Power Supply System Single Line Drawing - Sheet 2 of 3}

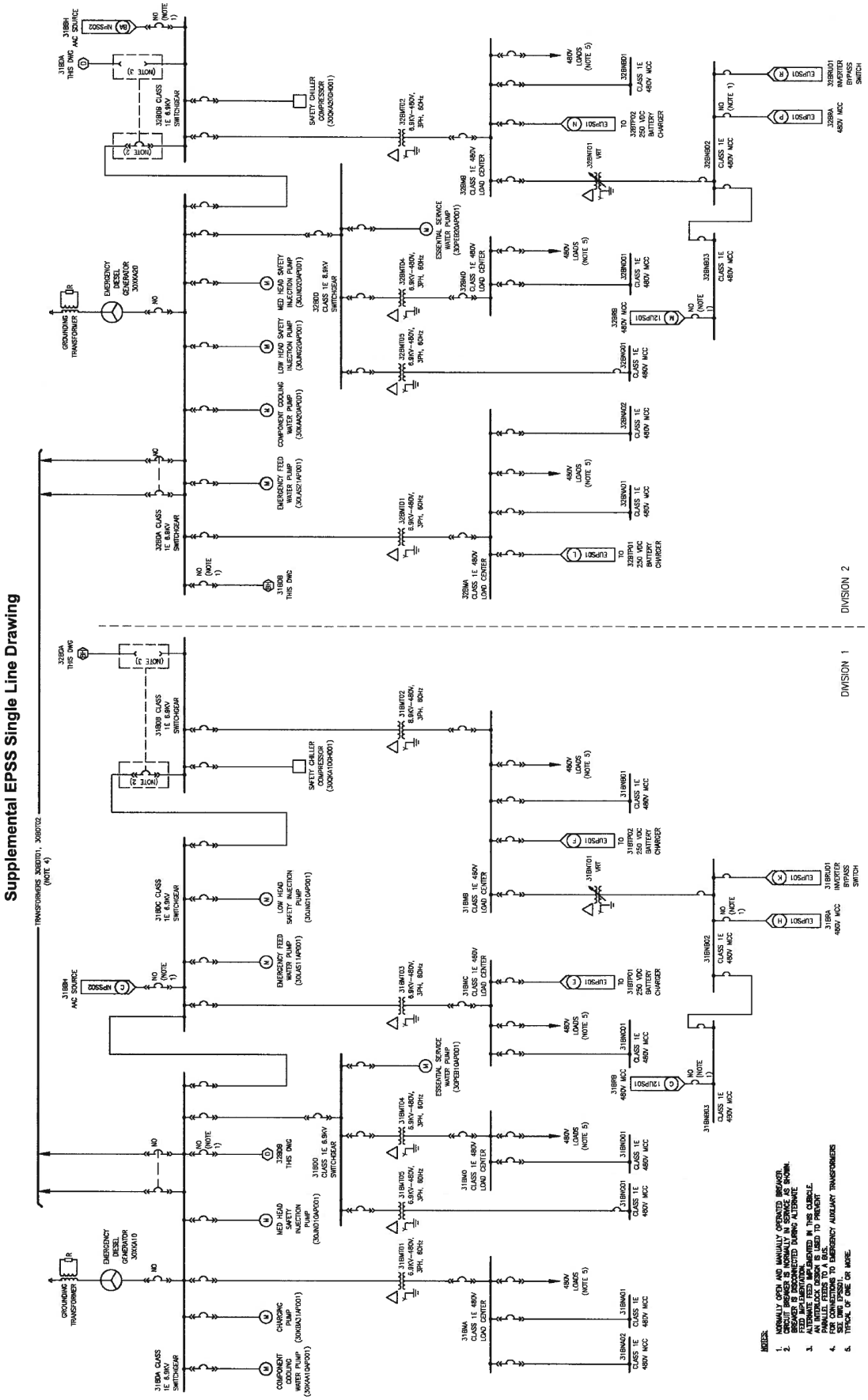

© 2007-2009 UniStar Nuclear Services, LLC in and to the Reference COLA, namely all text not in brackets
© 2007-2009 Union Electric Company d/b/a AmerenUE in and to all Callaway site specific and
AmerenUE specific COLA material, namely all text in brackets.
All rights reserved. COPYRIGHT PROTECTED

Figure 8.3-3—{Emergency Power Supply System Single Line Drawing - Sheet 3 of 3}

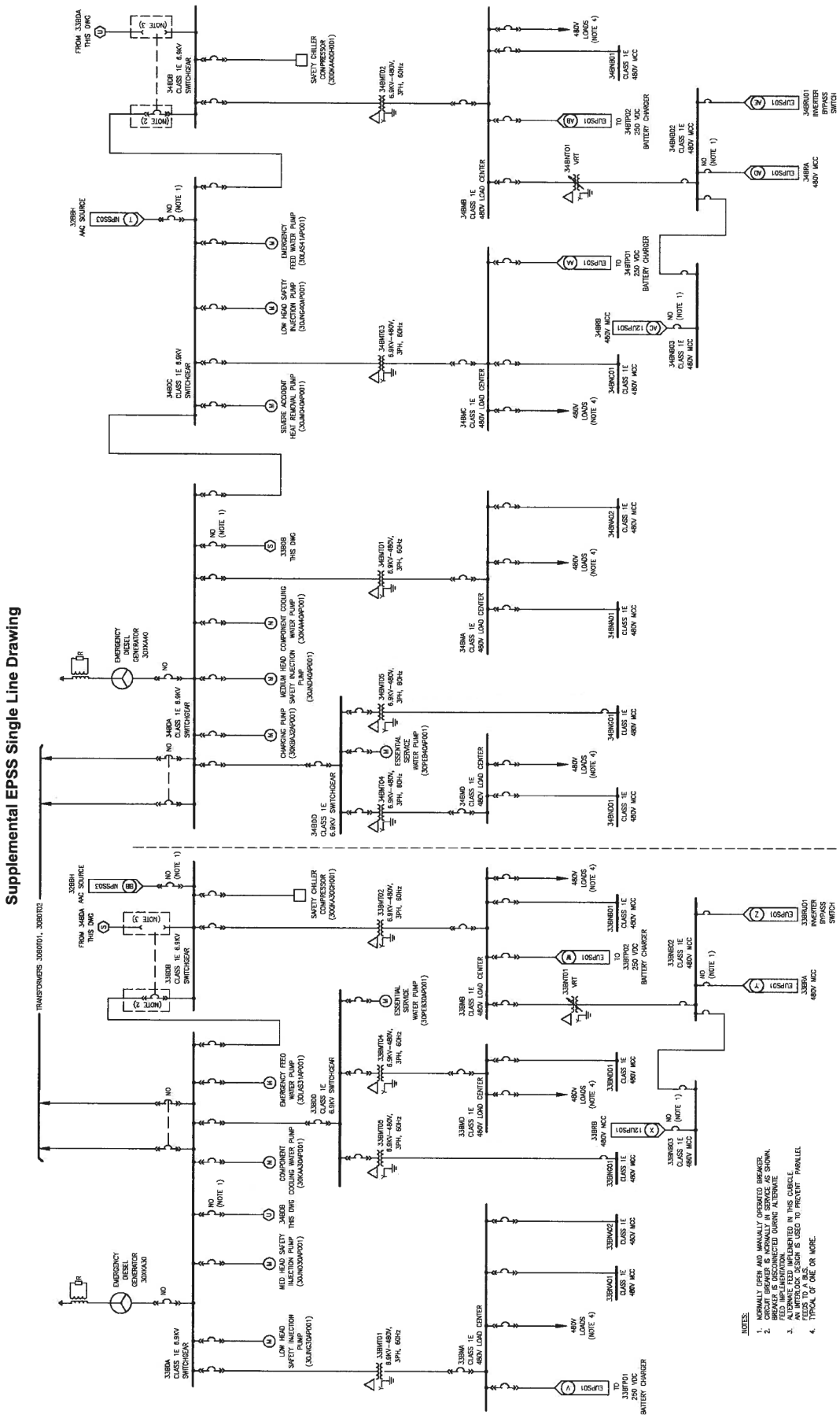

© 2007-2009 UniStar Nuclear Services, LLC in and to the Reference COLA, namely all text not in brackets
© 2007-2009 Union Electric Company d/b/a AmerenUE in and to all Callaway site specific and
AmerenUE specific COLA material, namely all text in brackets.
All rights reserved. COPYRIGHT PROTECTED

Figure 8.3-4—{Normal Power Supply System Single Line Drawing - Sheet 1 of 4}

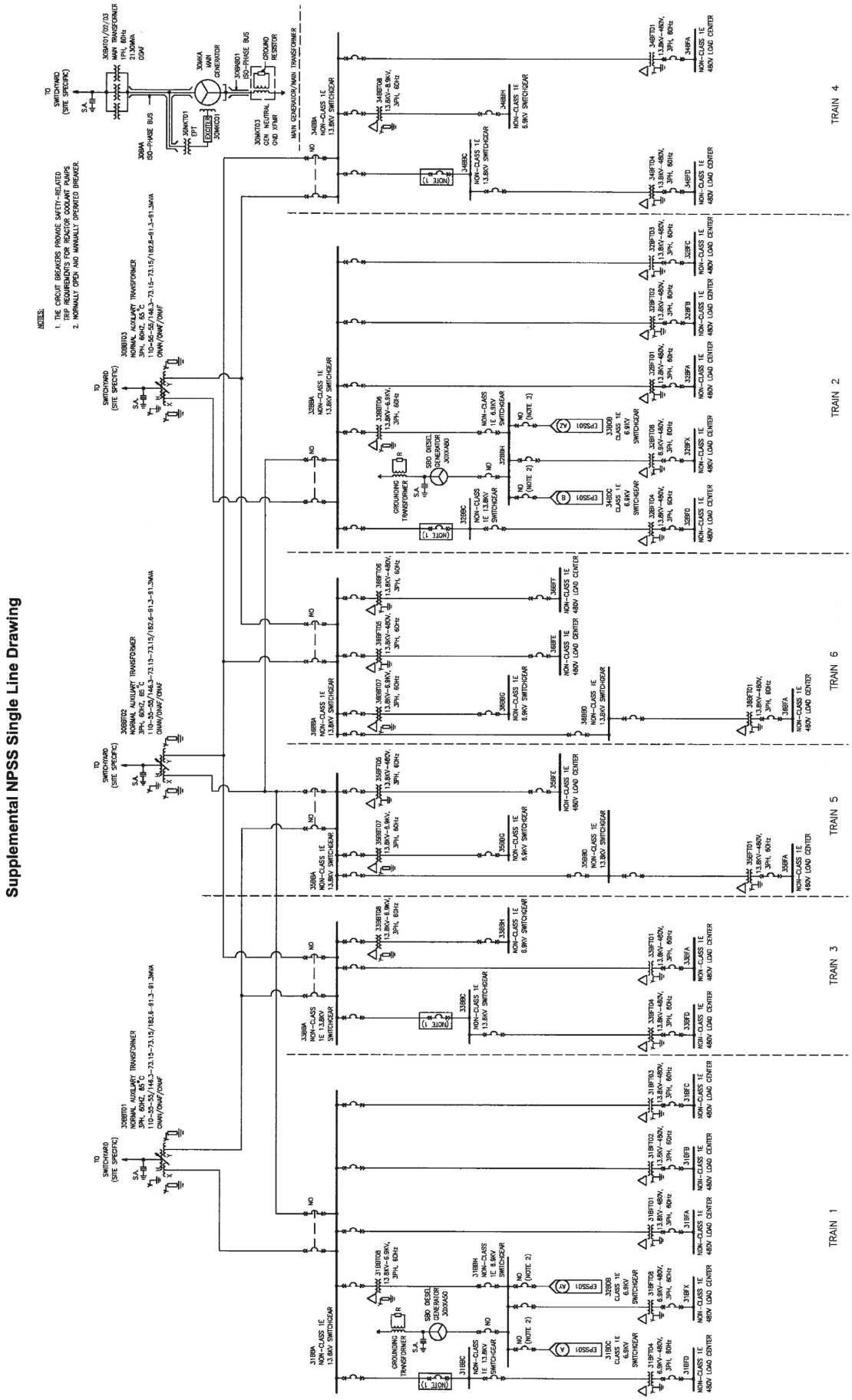

© 2007-2009 UniStar Nuclear Services, LLC in and to the Reference COLA, namely all text not in brackets
© 2007-2009 Union Electric Company d/b/a AmerenUE in and to all Callaway site specific and
AmerenUE specific COLA material, namely all text in brackets.
All rights reserved. COPYRIGHT PROTECTED

Figure 8.3-5—{Normal Power Supply System Single Line Drawing - Sheet 2 of 4}

Supplemental NPSS Single Line Drawing

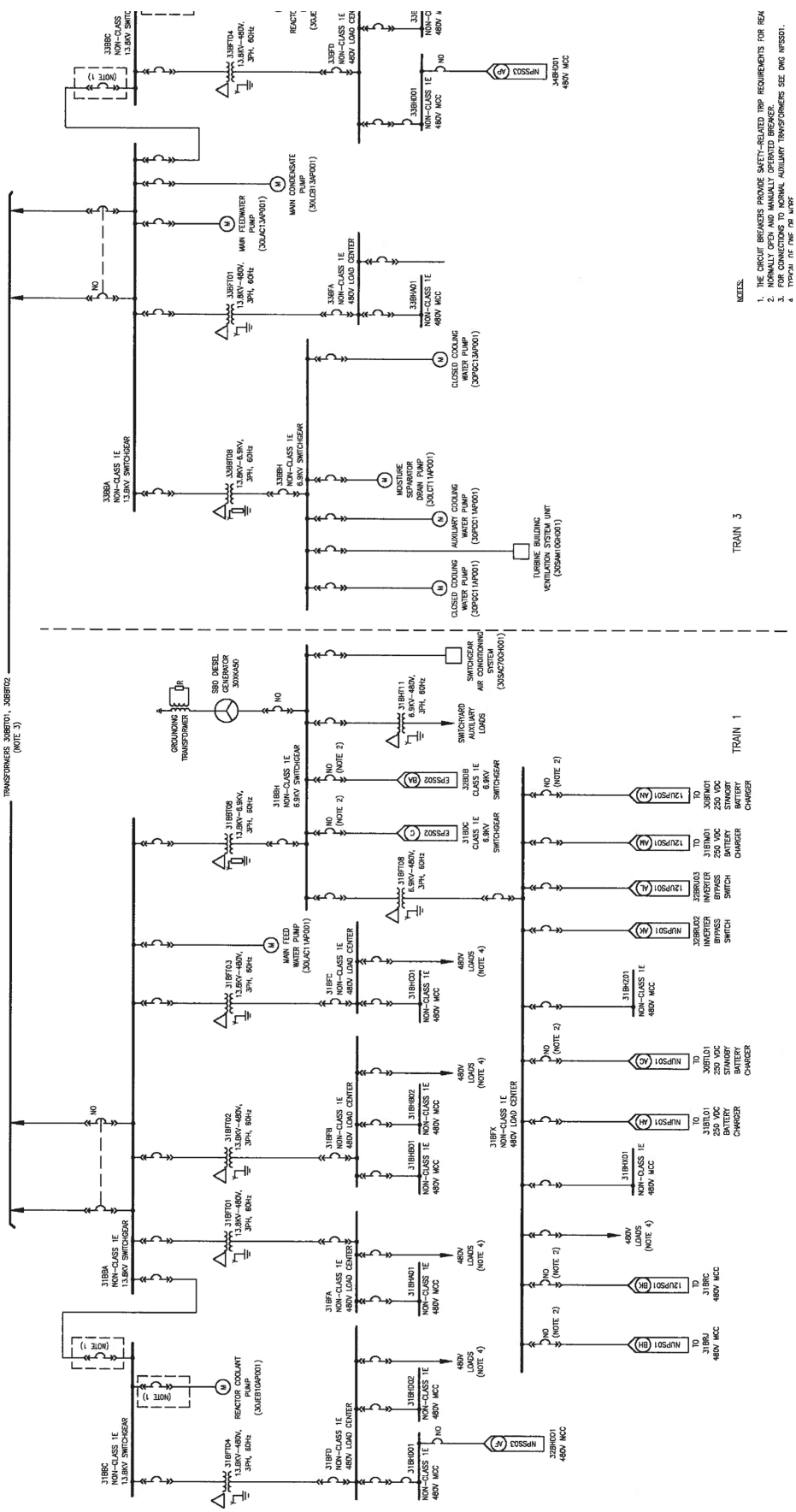

© 2007-2009 UniStar Nuclear Services, LLC in and to the Reference COLA, namely all text not in brackets
© 2007-2009 Union Electric Company d/b/a AmerenUE in and to all Callaway site specific and
AmerenUE specific COLA material, namely all text in brackets.
All rights reserved. COPYRIGHT PROTECTED

Figure 8.3-6—{Normal Power Supply System Single Line Drawing - Sheet 3 of 4}

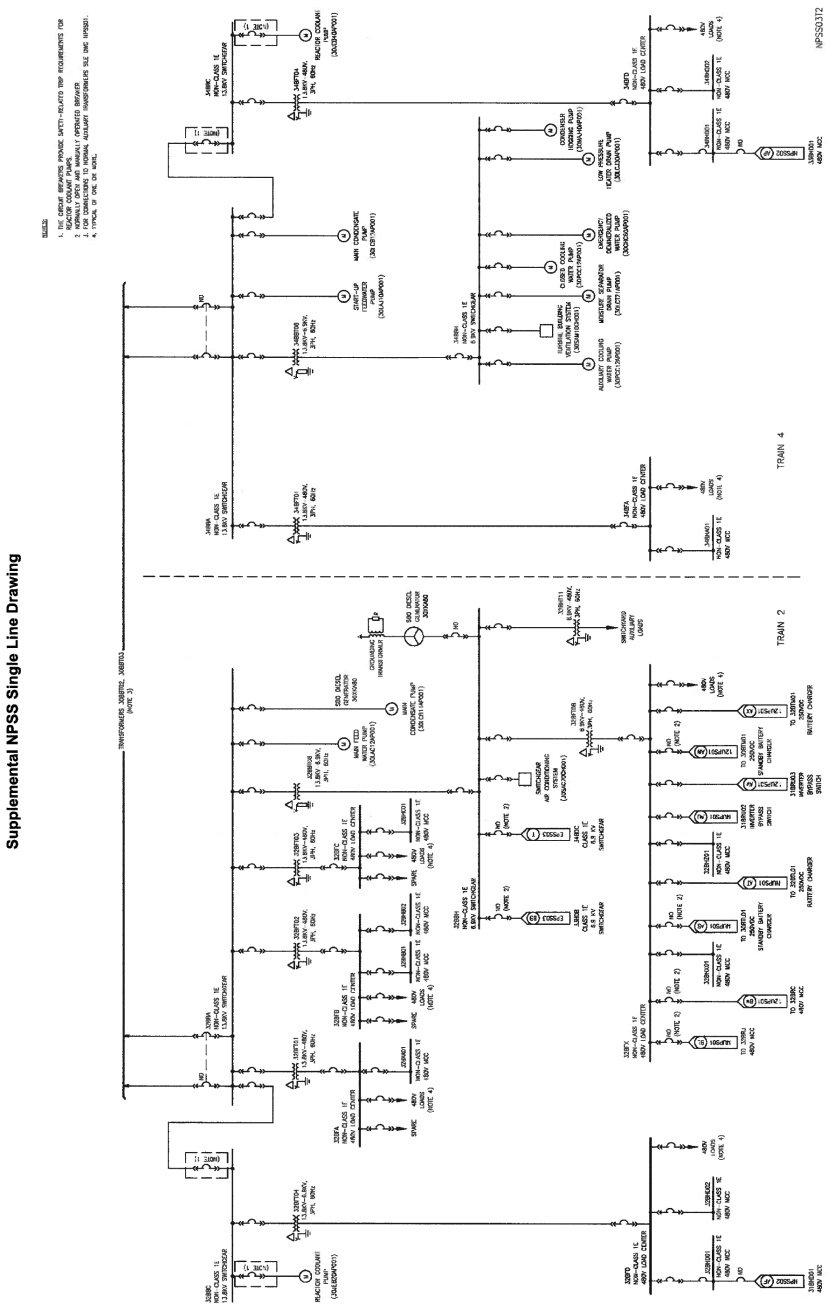

© 2007-2009 UniStar Nuclear Services, LLC in and to the Reference COLA, namely all text not in brackets
© 2007-2009 Union Electric Company d/b/a AmerenUE in and to all Callaway site specific and
AmerenUE specific COLA material, namely all text in brackets.
All rights reserved. COPYRIGHT PROTECTED

Figure 8.3-7—{Normal Power Supply System Single Line Drawing - Sheet 4 of 4}

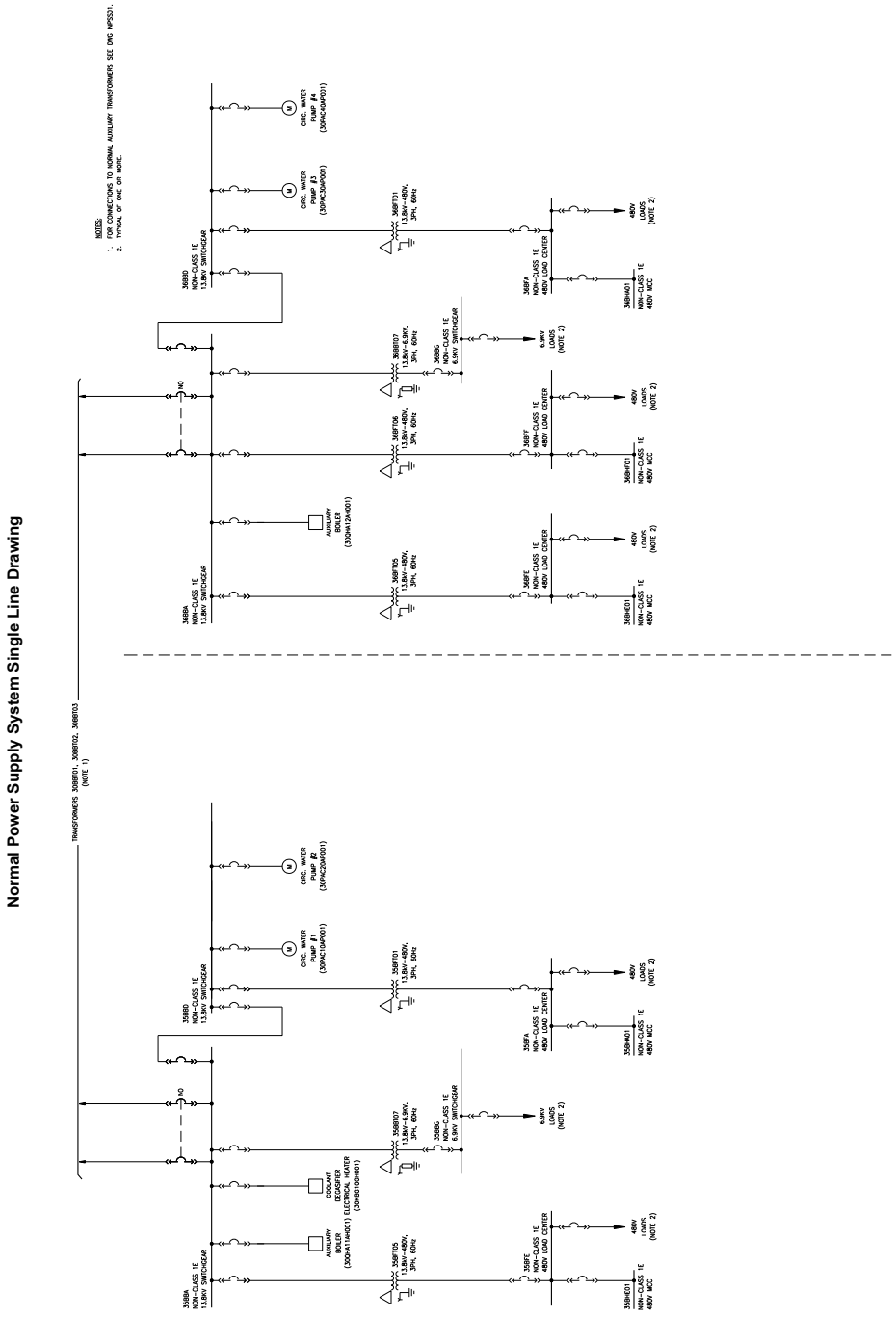

© 2007-2009 UniStar Nuclear Services, LLC in and to the Reference COLA, namely all text not in brackets
© 2007-2009 Union Electric Company d/b/a AmerenUE in and to all Callaway site specific and
AmerenUE specific COLA material, namely all text in brackets.
All rights reserved. COPYRIGHT PROTECTED

Figure 8.3-8—{Callaway Site Grounding}

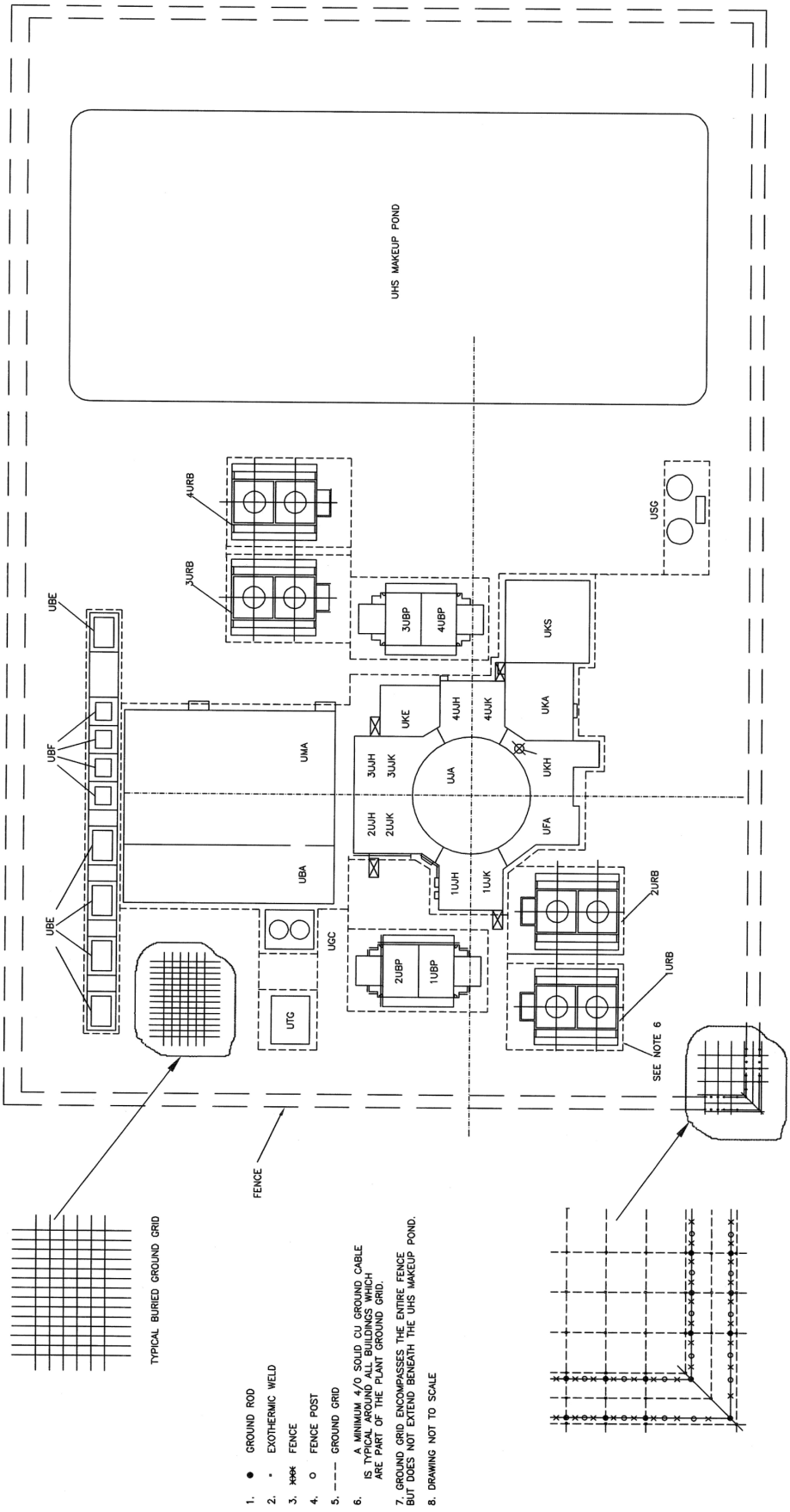

© 2007-2009 UniStar Nuclear Services, LLC in and to the Reference COLA, namely all text not in brackets
© 2007-2009 Union Electric Company d/b/a AmerenUE in and to all Callaway site specific and
AmerenUE specific COLA material, namely all text in brackets.
All rights reserved. COPYRIGHT PROTECTED

8.4 STATION BLACKOUT

This section of the U.S. EPR FSAR is incorporated by reference with the following supplements.

8.4.1 DESCRIPTION

No departures or supplements.

8.4.1.1 Station Blackout Diesel Generators

No departures or supplements.

8.4.1.2 Generator

No departures or supplements.

8.4.1.3 Alternate AC Power System Performance

The U.S. EPR FSAR includes the following COL Item in Section 8.4.1.3:

> A COL applicant that references the U.S. EPR design certification will provide site-specific information that identifies any additional local power sources and transmission paths that could be made available to resupply the power plant following a LOOP.

This COL Item is addressed as follows:

{The Callaway Plant Unit 2 switchyard is located less than 1 mi (1.6 km) from the existing Callaway Plant Unit 1 switchyard. There are no special local sources that can be made available to re-supply power to the plant following loss of a grid or an SBO. The Callaway Site receives priority from the Ameren Transmission Operator in restoration of off-site power regardless of the size and location of a grid blackout event. The process for restoration of AC power will be documented in accordance with established written procedures for the Ameren Transmission system, NERC Reliability Region and the Midwest ISO Reliability Coordinator footprint in which Callaway resides.

The following normal connections are as follows:

- Callaway Plant Unit 1 via two connections to the Callaway Plant Unit 2 switchyard.
- Montgomery 345 kV circuits MTGY-CAL-7 and MTGY-CAL-8 via two connections relocated from the Callaway Plant Unit 1 switchyard to the Callaway Plant Unit 2 switchyard.
- Bland 345 kV circuits CAL-BLAN-1 and CAL-BLAN-2, from the Callaway Plant Unit 1 switchyard.
- Loose Creek 345 kV circuit CAL-LSCR-3 from the Callaway Plant Unit 1 switchyard.}

8.4.1.4 Periodic Testing

No departures or supplements.

8.4.2 ANALYSIS

No departures or supplements.

© 2007-2009 UniStar Nuclear Services, LLC in and to the Reference COLA, namely all text not in brackets
© 2007-2009 Union Electric Company d/b/a AmerenUE in and to all Callaway site specific and
AmerenUE specific COLA material, namely all text in brackets.
All rights reserved. COPYRIGHT PROTECTED

8.4.2.1 10 CFR 50.2-Definitions and Introduction

No departures or supplements.

8.4.2.2 10 CFR 50.63-Loss of All Alternating Current Power

No departures or supplements.

8.4.2.3 10 CFR 50.65-Requirements for Monitoring the Effectiveness of Maintenance of Nuclear Power Plants

No departures or supplements.

8.4.2.4 Appendix A to 10 CFR 50, GDC for Nuclear Power Plants

No departures or supplements.

8.4.2.5 RG 1.9-Application Testing of Safety-Related Diesel Generators in Nuclear Power Plants-Revision 4

No departures or supplements.

8.4.2.6 RG 1.155-Station Blackout

No departures or supplements.

8.4.2.6.1 RG 1.155 C.3.1-Minimum Acceptable Station Blackout Duration Capability (Station Blackout Coping Duration)

{Callaway Plant Unit 2} utilizes the coping analysis described in Section 8.4.2.6 of the U.S. EPR FSAR.

8.4.2.6.2 RG 1.155 C.3.2-Evaluation of Plant-Specific Station Blackout Capability (Station Blackout Coping Capability)

No departures or supplements.

8.4.2.6.3 RG 1.155 C.3.3-Modification to Cope with Station Blackout — AAC Power Sources

No departures or supplements.

8.4.2.6.4 RG 1.155 C.3.4-Procedures and Training to Cope with Station Blackout (Procedures and Training)

The U.S. EPR FSAR includes the following COL Item in Section 8.4.2.6.4:

> A COL applicant that references the U.S. EPR design certification will address the RG 1.155 position C.3.4 related to procedures and training to cope with SBO.

This COL Item is addressed as follows:

Procedures and training shall include the operator actions necessary to cope with a station blackout for at least the duration determined according to Regulatory Guide 1.155 (NRC, 1988), Regulatory Position C.3.1, and shall include the operator actions necessary to restore normal decay heat removal once AC power is restored.

Procedures shall be integrated with the plant-specific technical guidelines and emergency operating procedure program, consistent with Supplement 1 to NUREG-0737 (NRC, 1982). The

© 2007-2009 UniStar Nuclear Services, LLC in and to the Reference COLA, namely all text not in brackets
© 2007-2009 Union Electric Company d/b/a AmerenUE in and to all Callaway site specific and
AmerenUE specific COLA material, namely all text in brackets.
All rights reserved. COPYRIGHT PROTECTED

task analysis portion of the emergency operating procedure program shall include an analysis of instrumentation adequacy during a station blackout.

8.4.2.7 Quality Assurance

No departures or supplements.

8.4.3 REFERENCES

{**NRC, 1982**. Supplement 1 to NUREG-0737 – Requirements for Emergency Response Capability, Generic Letter 82-33, U.S. Nuclear Regulatory Commission, December 1982.

NRC, 1988. Station Blackout, Regulatory Guide 1.155, U.S. Nuclear Regulatory Commission, August 1988.}

© 2007-2009 UniStar Nuclear Services, LLC in and to the Reference COLA, namely all text not in brackets
© 2007-2009 Union Electric Company d/b/a AmerenUE in and to all Callaway site specific and
AmerenUE specific COLA material, namely all text in brackets.
All rights reserved. COPYRIGHT PROTECTED