2.5S.4.10.6 Selected Design Parameters and Results Overview

Field testing and laboratory testing results from the STP 3 & 4 subsurface investigation are discussed in Subsection 2.5S.4.2. The parameters employed for bearing capacity, settlement, and earth pressure evaluations are based on the material characterization addressed in Subsection 2.5S.4.2, and as summarized in Table 2.5S.4-16. The parameters reflected in that table were conservatively selected, as discussed in Subsection 2.5S.4.2. An angle of shearing resistance of 30 degrees was used for characterization of structural fill for earth pressure evaluations~~;~~, 36 degrees was assumed for structural fill in the bearing capacity calculations; both values are ~~which is~~ considered conservative for granular fills compacted to 95 percent modified Proctor compaction. The groundwater level was selected at El. 25.5 feet for dynamic analyses and liquefaction analyses~~, and bearing capacity/settlement analyses,~~ whereas a groundwater level at ground surface (rough grade at El. 34 feet) was conservatively adopted for developing sample earth pressure diagrams. For bearing capacity analyses, the groundwater table was considered below the underside of concrete fill for short term and intermediate conditions, and a long term case with groundwater at El. 17.0 feet was evaluated and resulted in higher FOS than the short and intermediate cases. Groundwater at the surface (rough grade at El. 34 feet) would result in even higher FOS for the bearing capacity due to buoyancy on the structures. The FOS calculated against bearing capacity failure of foundations at major structures typically exceeded 3.0, where a value of 3.0 is commonly considered adequate for foundation stability. The settlement analyses considered the groundwater table was below the underside of concrete fill, and thus no settlement reduction by buoyancy on the structure was considered. ~~Similarly, a~~ A peak horizontal ground surface acceleration of 0.10g was used both for liquefaction analyses and for seismic earth pressure analyses. This value was determined based on site-specific seismologic and soil dynamics analyses, as discussed in Subsection 2.5S.4.7.5.

This table replaces COLA Rev. 2 Table 2.5S.4-37a to incorporate the new methodology.

Table 2.5S.4-37Aa Subsurface Conditions for Settlement Analysis for the STP 3&4 Reactor Buildings (Page 1 of 3)

Soil Properties									
	Simplified Average Subsurface Conditions					Selection Properties for Settlement Calculation			
	Depth (feet)		Elevation [1] (feet)				Unit Weight,	Poisson's	Elastic Modulus
STP	Top	Bottom	Top	Bottom	Stratum	Stratum	γ (pcf)	Ratio μ_d	E_{ds} (ksf)
3 Remainder of Building Area F(Clay) Present	0	18.0	32.3	50.3	Mat Foundation	Mat Foundation			
	18.0	28.0	50.3	60.3	Concrete Fill	Concrete Fill			
	28.0	44.7	60.3	77.0	F(Clay)	F(Clay)	125	0.15	1,970
	44.7	54.7	77.0	87.0	H(Sand)	H(Sand)	125	0.30	3,240
	54.7	149.7	87.0	182.0	J(Clay)	J(Clay)	125	0.15	3,175
	149.7	165.7	182.0	198.0	K(Clay)	K(Clay)	124	0.15	3,335
	165.7	195.7	198.0	228.0	K(Sand)	K(Sand)	127	0.30	4,915
	195.7	200.7	228.0	233.0	L(Clay)	L(Clay)	124	0.15	2,965
	200.7	215.7	233.0	248.0	M(Sand)	M(Sand)	127	0.30	4,350
	215.7	277.9	248.0	310.2	N(Clay)	N(Clay)	123	0.15	6,020
	277.9	293.9	310.2	326.2	N(Sand)	N(Sand)	128	0.30	11,645
	293.9	298.9	326.2	331.2	N(Clay)	N(Clay)	123	0.15	6,020
	298.9	337.9	331.2	370.2	N(Sand)	N(Sand)	128	0.30	11,645
	337.9	344.7	370.2	377.0	N(Clay)	N(Clay)	123	0.15	6,020
	344.7	361.7	377.0	394.0	N(Sand)	N(Sand)	128	0.30	11,645
	361.7	386.7	394.0	419.0	N(Clay)	N(Clay)	123	0.15	6,020
	386.7	402.7	419.0	435.0	N(Sand)	N(Sand)	128	0.30	11,625
	402.7	537.2	435.0	569.5	N(Clay)	N(Clay)	123	0.15	6,020
	537.2	613.7	569.5	646.0	Deep Silt/Clay, Vs=1585	Silt/Clay	129	0.15	11,190
	613.7	713.7	646.0	746.0	Deep Silty Sand Vs=1585	Silty Sand	126	0.30	12,780
	713.7	813.7	746.0	846.0	Deep Silt/Clay, Vs=1585	Silt/Clay	130	0.15	11,275
	813.7	933.7	846.0	966.0	Deep Silty Sand Vs=1585	Silty Sand	130	0.30	13,185
	933.7	1233.7	966.0	1266.0	Deep Silty Sand Vs=2350	Silty Sand	130	0.30	28,985
	1233.7	1863.7	1266.0	1896.0	Deep Interbedded Vs=2550	Claystone/ Siltstone*	130	0.30	34,130
	1863.7	2433.7	1896.0	2466.0	Deep Interbedded Vs=2850	Claystone/ Sand/Silt	135	0.30	44,270

[1] Elevations are referenced to NGVD 29 datum
*/Clay/Sand/Silt

Table 2.5S.4-37Aa Subsurface Conditions for Settlement Analysis for the STP 3&4 Reactor Buildings (Page 2 of 3)

Soil Properties									
	~~Simplified~~ Average Subsurface Conditions					~~Selection~~ Properties for Settlement Calculation			
	Depth (feet)		Elevation [1] (feet)				Unit Weight,	Poisson's	Elastic Modulus
STP	Top	Bottom	Top	Bottom	Stratum	Stratum	γ (pcf)	Ratio μ_d	E_{ds} (ksf))
3 North Edge F(Clay) Absent	0	18.0	32.3	50.3	Mat Foundation	Mat Foundation	[illegible]	[illegible]	[illegible]
	18.0	28.0	50.3	60.3	Concrete Fill	Concrete Fill	[illegible]	[illegible]	[illegible]
	28.0	54.7	60.3	87.0	H(Sand)	H(Sand)	125	0.30	3,240
	54.7	149.7	87.0	182.0	J(Clay)	J(Clay)	125	0.15	3,175
	149.7	165.7	182.0	198.0	K(Clay)	K(Clay)	124	0.15	3,335
	165.7	195.7	198.0	228.0	K(Sand)	K(Sand)	127	0.30	4,915
	195.7	200.7	218.0	233.0	L(Clay)	L(Clay)	124	0.15	2,965
	200.7	215.7	233.0	248.0	M(Sand)	M(Sand)	127	0.30	4,350
	215.7	277.9	248.0	310.2	N(Clay)	N(Clay)	123	0.15	6,020
	277.9	293.9	310.2	326.2	N(Sand)	N(Sand)	128	0.30	11,645
	293.9	298.9	326.2	331.2	N(Clay)	N(Clay)	123	0.15	6,020
	298.9	337.9	331.2	370.2	N(Sand)	N(Sand)	128	0.30	11,645
	337.9	344.7	370.2	377.0	N(Clay)	N(Clay)	123	0.15	6,020
	344.7	361.7	377.0	394.0	N(Sand)	N(Sand)	128	0.30	11,645
	361.7	386.7	394.0	419.0	N(Clay)	N(Clay)	123	0.15	6,020
	386.7	402.7	419.0	435.0	N(Sand)	N(Sand)	128	0.30	11,645
	402.7	537.2	493.0	569.5	N(Clay)	N(Clay)	123	0.15	6,020
	537.2	613.7	569.5	646.0	Deep Silt/Clay Vs=1585	Silt/Clay	129	0.15	11,190
	613.7	713.7	646.0	746.0	Deep Silty Sand Vs=1585	Silty Sand	126	0.30	12,780
	713.7	813.7	746.0	846.0	Deep Silt/Clay Vs=1585	Silt/Clay	130	0.15	11,275
	813.7	933.7	846.0	966.0	Deep Silty Sand Vs=1585	Silty Sand	130	0.30	13,185
	933.7	1233.7	966.0	1266.0	Deep Silty Sand Vs=2350	Silty Sand	130	0.30	28,985
	1233.7	1863.7	1266.0	1896.0	Deep Interbedded Vs=2550	Claystone/ Siltstone*	130	0.30	34,130
	1863.7	2433.7	1896.0	2466.0	Deep Interbedded Vs=2850	Claystone/ Sand/Silt	135	0.30	44,270

[1] Elevations are referenced to NGVD 29 datum
*/Clay/Sand/Silt

Table 2.5S.4-37Aa Subsurface Conditions for Settlement Analysis for the STP 3&4 Reactor Buildings (Page 3 of 3)

Soil Properties									
	~~Simplified~~ Average Subsurface Conditions					~~Selection~~ Properties for Settlement Calculation			
	Depth (feet)		Elevation [1] (feet)						
STP	Top	Bottom	Top	Bottom	Stratum	Stratum	Unit Weight, γ (pcf)	Poisson's Ratio μ_d	Elastic Modulus E_{ds} (ksf)
	0	18.0	32.3	50.3	Mat Foundation	[illegible]	[illegible]	[illegible]	[illegible]
	18.0	28.0	50.3	60.3	Concrete Fill	[illegible]	[illegible]	[illegible]	[illegible]
	28.0	44.7	60.3	77.0	F(Clay)	F(Clay)	125	0.15	1,970
	44.7	54.7	77.0	87.0	H(Sand)	H(Sand)	125	0.30	3,240
	54.7	84.7	87.0	117.0	J(Clay)	J(Clay)	125	0.15	3,175
	84.7	114.7	117.0	147.0	J(Sand)	J(Sand)	125	0.30	4,755
	114.7	149.7	147.0	182.0	J(Clay)	J(Clay)	125	0.15	3,175
	149.7	174.7	182.0	207.0	K(Clay)	K(Clay)	124	0.15	3,335
	174.7	195.7	207.0	228.0	K(Sand)	K(Sand)	127	0.30	4,915
	195.7	200.7	228.0	233.0	L(Clay)	L(Clay)	124	0.15	2,965
	200.7	215.7	233.0	248.0	M(Sand)	M(Sand)	127	0.30	4,350
	215.7	271.7	248.0	304.0	N(Clay)	N(Clay)	123	0.15	6,020
	271.7	289.7	304.0	322.0	N(Sand)	N(Sand)	128	0.30	11,645
	289.7	300.7	322.0	333.0	N(Clay)	N(Clay)	123	0.15	6,020
	300.7	326.7	333.0	359.0	N(Sand)	N(Sand)	128	0.30	11,645
	326.7	336.7	359.0	369.0	N(Clay)	N(Clay)	123	0.15	6,020
4	336.7	356.7	369.0	389.0	N(Sand)	N(Sand)	128	0.30	11,645
	356.7	441.7	389.0	474.0	N(Clay)	N(Clay)	123	0.15	6,020
	441.7	476.7	474.0	509.0	N(Sand)	N(Sand)	128	0.30	11,645
	476.7	537.2	509.0	569.5	N(Clay)	N(Clay)	123	0.15	6,020
	537.2	613.7	569.5	646.0	Deep Silt/Clay Vs=1585	Silt/Clay	129	0.15	11,190
	613.7	713.7	646.0	746.0	Deep Silty Sand Vs=1585	Silty Sand	126	0.30	12,780
	713.7	813.7	746.0	846.0	Deep Silt/Clay Vs=1585	Silt/Clay	130	0.15	11,275
	813.7	933.7	846.0	966.0	Deep Silty Sand Vs=1585	Silty Sand	130	0.30	13,185
	933.7	1233.7	966.0	1266.0	Deep Silty Sand Vs=2350	Silty Sand	130	0.30	28,985
	1233.7	1863.7	1266.0	1896.0	Deep Interbedded Vs=2550	Claystone/ Siltstone*	130	0.30	34,130
	1863.7	2433.7	1896.0	2466.0	Deep Interbedded Vs=2850	Claystone/ Sand/Silt	135	0.30	44,270

[1] Elevations are referenced to NGVD 29 datum. */Clay/Sand/Silt

Table 2.5S.4-37Bb Subsurface Conditions for Bearing Capacity Analysis for the STP 3 & 4 Reactor Buildings (Page 1 of 8)

Average Properties within the Foundation Deformation Zone for Bearing Capacity										
					Shear Strength					
					Layer		Average			
STP	Soil Layer Selection Preference	Soil Layer	Thickness of Layer Below Mat (feet)	Top Elevation [1] (feet)	c (ksf)	Φ(°)	c (ksf)	Φ(°)	Foundation Width, B (feet)	Effective Shear Depth, H' (feet)
3	Alternate Water Table at el. -60.3 ft Short Term Conditions c = S_u for Clays Backfill to el. +34.0 ft	Mat Foundation	[redacted]	-32.3	[redacted]	[redacted]	3.4	3.6	207.7	110.6
		Concrete Fill	10.0	-50.3	[redacted]	[redacted]				
		F(Clay)	16.7	-60.3	3.4	0				
		H(Sand)	10.0	-77.0	0	35				
		J(Clay)	83.9	-87.0	3.8	0				

[1] Elevations are referenced to NGVD 29 datum

Table 2.5S.4-37 Bb Subsurface Conditions for Bearing Capacity Analysis for the STP 3 & 4 Reactor Buildings (Page 2 of 8)

Average Properties within the Foundation Deformation Zone for Bearing Capacity										
					Shear Strength					
					Layer		Average			
STP	Soil Layer Selection Preference	Soil Layer	Thickness of Layer Below Mat (feet)	Top Elevation [1] (feet)	c (ksf)	Φ(°)	c (ksf)	Φ(°)	Foundation Width, B (feet)	Effective Shear Depth, H' (feet)
3	Design Water Table at el. +17.0 ft Short Term Conditions $c_i = S_u$ for Clays Backfill to el. +34.0 ft	Mat Foundation	[redacted]	32.3	[redacted]	[redacted]	3.4	3.6	207.7	110.6
		Concrete Fill	10.0	-50.3	[redacted]	[redacted]				
		F(Clay)	16.7	-60.3	3.4	0				
		H(Sand)	10.0	-77.0	0	35				
		J(Clay)	83.9	-87.0	3.8	0				

[1] Elevations are referenced to NGVD 29 datum

Table 2.5S.4-37 Bb Subsurface Conditions for Bearing Capacity Analysis for the STP 3 & 4 Reactor Buildings (Page 3 of 8)

Average Properties within the Foundation Deformation Zone for Bearing Capacity										
STP	Soil Layer Selection Preference	Soil Layer	Thickness of Layer Below Mat (feet)	Top Elevation [1] (feet)	Shear Strength Layer c (ksf)	Shear Strength Layer Φ(°)	Shear Strength Average c (ksf)	Shear Strength Average Φ(°)	Foundation Width, B (feet)	Effective Shear Depth, H' (feet)
3	Alternate Water Table at el. -60.3 ft Long Term Conditions c and Φ' for Clays Backfill to el. +34.0 ft	Mat Foundation	¦	-32.3	¦	¦	2.08	12.8	207.7	130.0
		Concrete Fill	10.0	-50.3	¦	¦				
		F(Clay)	16.7	-60.3	2.0	8				
		H(Sand)	10.0	-77.0	0	35				
		J(Clay)	95.0	-87.0	2.3	11				
		K(Clay)	8.3	-182.0	2.3	11				

[1] Elevations are referenced to NGVD 29 datum

Table 2.5S.4-37 Bb Subsurface Conditions for Bearing Capacity Analysis for the STP 3 & 4 Reactor Buildings (Page 4 of 8)

Average Properties within the Foundation Deformation Zone for Bearing Capacity										
					Shear Strength					
					Layer		Average			
STP	Soil Layer Selection Preference	Soil Layer	Thickness of Layer Below Mat (feet)	Top Elevation [1] (feet)	c (ksf)	Φ(°)	c (ksf)	Φ(°)	Foundation Width, B (feet)	Effective Shear Depth, H' (feet)
3	Design Water Table at el. +17.0 ft Long Term Conditions c' and Φ' for Clays Backfill to el. +34.0 ft	Mat Foundation	!	-32.3	!	!	2.08	12.8	207.7	130.0
		Concrete Fill	10.0	-50.3	!	!				
		F(Clay)	16.7	-60.3	2.0	8				
		H(Sand)	10.0	-77.0	0	35				
		J(Clay)	95.0	-87.0	2.3	11				
		K(Clay)	8.3	-182.0	2.3	11				

[1] Elevations are referenced to NGVD 29 datum

Table 2.5S.4-37 ~~Bb~~ Subsurface Conditions for Bearing Capacity Analysis for the STP 3 & 4 Reactor Buildings (Page 5 of 8)

Average Properties within the Foundation Deformation Zone for Bearing Capacity										
					Shear Strength					
					Layer		Average			
STP	Soil ~~Layer~~ Selection Preference	Soil Layer	Thickness of Layer Below Mat (feet)	Top Elevation [1] (feet)	c (ksf)	Φ(°)	c (ksf)	Φ(°)	Foundation Width, B (feet)	Effective Shear Depth, H' (feet)
4	Alternate Water Table at el. -60.3 ft Short Term Conditions c = S_u for Clays Backfill to el. +34.0 ft	Mat Foundation	-	-32.3	-	-	2.56	11.7	207.7	127.6
		Concrete Fill	10.0	-50.3	-	-				
		F(Clay)	16.7	-60.3	3.4	0				
		H(Sand)	10.0	-77.0	0	35				
		J(Clay)	30.0	-87.0	3.8	0				
		J(Sand)	30.0	-117.0	0	33				
		J(Clay)	35.0	-147.0	3.8	0				
		K(Clay)	5.9	-182.0	3.9	0				

[1] Elevations are referenced to NGVD 29 datum

Table 2.5S.4-37 Bb Subsurface Conditions for Bearing Capacity Analysis for the STP 3 & 4 Reactor Buildings (Page 6 of 8)

Average Properties within the Foundation Deformation Zone for Bearing Capacity										
					Shear Strength					
					Layer		Average			
STP	Soil Layer Selection Preference	Soil Layer	Thickness of Layer Below Mat (feet)	Top Elevation [1] (feet)	c (ksf)	Φ(°)	c (ksf)	Φ(°)	Foundation Width, B (feet)	Effective Shear Depth, H' (feet)
4	Design Water Table at el. +17.0 ft Short Term Conditions c = S_u for Clays Backfill to el. +34.0 ft	Mat Foundation	!	-32.3	!	!	2.56	11.7	207.7	127.6
		Concrete Fill	10.0	-50.3	!	!				
		F(Clay)	16.7	-60.3	3.4	0				
		H(Sand)	10.0	-77.0	0	35				
		J(Clay)	30.0	-87.0	3.8	0				
		J(Sand)	30.0	-117.0	0	33				
		J(Clay)	35.0	-147.0	3.8	0				
		K(Clay)	5.9	-182.0	3.9	0				

[1] Elevations are referenced to NGVD 29 datum

Table 2.5S.4-37 ~~Bb~~ Subsurface Conditions for Bearing Capacity Analysis for the STP 3 & 4 Reactor Buildings (Page 7 of 8)

Average Properties within the Foundation Deformation Zone for Bearing Capacity										
					Shear Strength					
					Layer		Average			
STP	Soil ~~Layer~~ Selection Preference	Soil Layer	Thickness of Layer Below Mat (feet)	Top Elevation [1] (feet)	c (ksf)	Φ(°)	c (ksf)	Φ(°)	Foundation Width, B (feet)	Effective Shear Depth, H' (feet)
4	Alternate Water Table at el. -60.3 ft Long Term Conditions c' and Φ' for Clays Backfill to el. +34.0 ft	Mat Foundation	!	-32.3	!	!	1.62	17.7	207.7	142.2
		Concrete Fill	10.0	-50.3	!	!				
		F(Clay)	16.7	-60.3	2.0	8				
		H(Sand)	10.0	-77.0	0	35				
		J(Clay)	30.0	-87.0	2.3	11				
		J(Sand)	30.0	-117.0	0	33				
		J(Clay)	35.0	-147.0	2.3	11				
		K(Clay)	20.5	-182.0	2.3	11				

[1] Elevations are referenced to NGVD 29 datum

Table 2.5S.4-37 Bb Subsurface Conditions for Bearing Capacity Analysis for the STP 3 & 4 Reactor Buildings (Page 8 of 8)

Average Properties within the Foundation Deformation Zone for Bearing Capacity										
					Shear Strength					
					Layer		Average			
STP	Soil Layer Selection Preference	Soil Layer	Thickness of Layer Below Mat (feet)	Top Elevation [1] (feet)	c (ksf)	Φ(°)	c (ksf)	Φ(°)	Foundation Width, B (feet)	Effective Shear Depth, H' (feet)
4	Design Water Table at el. +17.0 ft Long Term Conditions c' and Φ' for Clays Backfill to el. +34.0 ft	Mat Foundation	[redacted]	-32.3	[redacted]	[redacted]	1.62	17.7	207.7	142.2
		Concrete Fill	10.0	-50.3	[redacted]	[redacted]				
		F(Clay)	16.7	-60.3	2.0	8				
		H(Sand)	10.0	-77.0	0	35				
		J(Clay)	30.0	-87.0	2.3	11				
		J(Sand)	30.0	-117.0	0	33				
		J(Clay)	35.0	-147.0	2.3	11				
		K(Clay)	20.5	-182.0	2.3	11				

[1] Elevations are referenced to NGVD 29 datum

This table replaces COLA Rev. 2 Table 2.5S.4-38a to include the new methodology.

Table 2.5S.4-38Aa Subsurface Conditions for Settlement Analysis for the STP 3 & 4 Control Buildings (Page 1 of 2)

Soil Properties									
	Simplified Average Subsurface Conditions				Selection Properties for Settlement Calculation	Simplified Average Subsurface Conditions		Selection Properties for Settlement Calculation	
	Depth (feet)		Elevation [1] (feet)						
STP	Top	Bottom	Top	Bottom	Stratum	Stratum	Unit Weight, γ (pcf)	Poisson's Ratio μ_d	Elastic Modulus E_{ds} (ksf)
3	0	10.0	32.3	42.3	Mat Foundation	Mat Foundation			
	10.0	12.0	42.3	44.3	Concrete Fill	Concrete Fill			
	12.0	38.7	44.3	71.0	E(Sand)	E(Sand)	123	0.30	3,145
	38.7	58.7	71.0	91.0	H(Sand)	H(Sand)	125	0.30	3,240
	58.7	94.8	91.0	127.1	J(Clay)	J(Clay)	125	0.15	3,175
	94.8	108.7	127.1	141.0	J(Sand)	J(Sand)	125	0.30	4,755
	108.7	149.7	141.0	182.0	J(Clay)	J(Clay)	125	0.15	3,175
	149.7	165.7	182.0	198.0	K(Clay)	K(Clay)	124	0.15	3,335
	165.7	195.7	198.0	228.0	K(Sand)	K(Sand)	127	0.30	4,915
	195.7	200.7	228.0	233.0	L(Clay)	L(Clay)	124	0.15	2,965
	200.7	215.7	233.0	248.0	M(Sand)	M(Sand)	127	0.30	4,350
	215.7	277.7	248.0	310.0	N(Clay)	N(Clay)	123	0.15	6,020
	277.7	293.7	310.0	326.0	N(Sand)	N(Sand)	128	0.30	11,645
	293.7	298.7	326.0	331.0	N(Clay)	N(Clay)	123	0.15	6,020
	298.7	337.7	331.0	370.0	N(Sand)	N(Sand)	128	0.30	11,645
	337.7	344.7	370.0	377.0	N(Clay)	N(Clay)	123	0.15	6,020
	344.7	361.7	377.0	394.0	N(Sand)	N(Sand)	128	0.30	11,645
	361.7	386.7	394.0	419.0	N(Clay)	N(Clay)	123	0.15	6,020
	386.7	402.7	419.0	435.0	N(Sand)	N(Sand)	128	0.30	11,645
	402.7	537.2	435.0	569.5	N(Clay)	N(Clay)	123	0.15	6,020
	537.2	613.7	469.5	646.0	Deep Silt/Clay, Vs=1585	Silt/Clay	129	0.15	11,190
	613.7	713.7	646.0	746.0	Deep Silty Sand Vs=1585	Silty Sand	126	0.30	12,780
	713.7	813.7	746.0	846.0	Deep Silt/Clay, Vs=1585	Silt/Clay	130	0.15	11,275
	813.7	933.7	846.0	966.0	Deep Silty Sand Vs=1585	Silty Sand	130	0.30	13,185
	933.7	1233.7	966.0	1266.0	Deep Silty Sand Vs=2350	Silty Sand	130	0.30	28,985
	1233.7	1863.7	1266.0	1896.0	Deep Interbedded Vs=2550	Claystone/ Siltstone	130	0.30	34,130
	1863.7	2433.7	1896.0	2466.0	Deep Interbedded Vs=2850	Claystone/ Sand/Silt	135	0.30	44,270

[1] Elevations are referenced to NGVD 29 datum

/Clay/Sand/Silt

Table 2.5S.4-38Aa Subsurface Conditions for Settlement Analysis for the STP 3 & 4 Control Buildings (Page 2 of 2)

Soil Properties									
	Simplified Average Subsurface Conditions				Selection Properties for Settlement Calculation	Simplified Average Subsurface Conditions		Selection Properties for Settlement Calculation	
	Depth (feet)		Elevation [1] (feet)						
STP	Top	Bottom	Top	Bottom	Stratum	Stratum	Unit Weight, γ (pcf)	Poisson's Ratio μ_d	Elastic Modulus E_{ds} (ksf)
4	0	10.0	-32.3	-42.3	Mat Foundation				
	10.0	12.0	-42.3	-44.3	Concrete Fill				
	12.0	19.7	-44.3	-52.0	E(Sand)	E(Sand)	123	0.30	3,145
	19.7	39.7	-52.0	-72.0	F(Clay)	F(Clay)	125	0.15	1,970
	39.7	54.7	-72.0	-87.0	H(Sand)	H(Sand)	125	0.30	3,240
	54.7	79.7	-87.0	-112.0	J(Clay)	J(Clay)	125	0.15	3,175
	79.7	94.7	-112.0	-127.0	J(Sand)	J(Sand)	125	0.30	4,755
	94.7	149.7	-127.0	-182.0	J(Clay)	J(Clay)	125	0.15	3,175
	149.7	174.7	-182.0	-207.0	K(Clay)	K(Clay)	124	0.15	3,335
	174.7	195.7	-207.0	-228.0	K(Sand)	K(Sand)	127	0.30	4,915
	195.7	200.7	-228.0	-233.0	L(Clay)	L(Clay)	124	0.15	2,965
	200.7	215.7	-233.0	-248.0	M(Sand)	M(Sand)	127	0.30	4,350
	215.7	271.7	-248.0	-304.0	N(Clay)	N(Clay)	123	0.15	6,020
	271.7	289.7	-304.0	-322.0	N(Sand)	N(Sand)	128	0.30	11,645
	289.7	300.7	-322.0	-333.0	N(Clay)	N(Clay)	123	0.15	6,020
	300.7	326.7	-333.0	-359.0	N(Sand)	N(Sand)	128	0.30	11,645
	326.7	336.7	-359.0	-369.0	N(Clay)	N(Clay)	123	0.15	6,020
	336.7	356.7	-369.0	-389.0	N(Sand)	N(Sand)	128	0.30	11,645
	356.7	441.7	-389.0	-474.0	N(Clay)	N(Clay)	123	0.15	6,020
	441.7	476.7	-474.0	-509.0	N(Sand)	N(Sand)	128	0.30	11,645
	476.7	537.2	-509.0	-569.5	N(Clay)	N(Clay)	123	0.15	6,020
	537.2	613.7	-569.5	-646.0	Deep Silt/Clay Vs=1585	Silt/Clay	129	0.15	11,190
	613.7	713.7	-646.0	-746.0	Deep Silty Sand Vs=1585	Silty Sand	126	0.30	12,780
	713.7	813.7	-746.0	-846.0	Deep Silt/Clay Vs=1585	Silt/Clay	130	0.15	11,275
	813.7	933.7	-846.0	-966.0	Deep Silty Sand Vs=1585	Silty Sand	130	0.30	13,185
	933.7	1233.7	-966.0	-1266.0	Deep Silty Sand Vs=2350	Silty Sand	130	0.30	28,985
	1233.7	1863.7	-1266.0	-1896.0	Deep Interbedded Vs=2550	Claystone/ Siltstone*	130	0.30	34,130
	1863.7	2433.7	-1896.0	-2466.0	Deep Interbedded Vs=2850	Claystone/ Sand/Silt	135	0.30	44,270

[1] Elevations are referenced to NGVD 29 datum

*/Clay/Sand/Silt

Table 2.5S.4-38Bb Subsurface Conditions for Bearing Capacity Analysis for the STP 3 & 4 Control Buildings (Page 1 of 8)

Average Properties within the Foundation Deformation Zone for Bearing Capacity										
					Shear Strength					
					Layer		Average			
STP	Soil Selection Preference	Soil Layer	Thickness of Layer Below Mat (feet)	Top Elevation [1] (feet)	c(ksf)	Φ(°)	c(ksf)	Φ(°)	Foundation Width, B (feet)	Effective Shear Depth, H' (feet)
3	Alternate Water Table at el. -44.3 ft Short Term Conditions c = S_u for Clays Backfill to el. +34.0 ft	Mat Foundation	[redacted]	-32.3	[redacted]	[redacted]	1.07	26.7	80.1	65.0
		Concrete Fill	2.0	-42.3	[redacted]	[redacted]				
		E(Sand)	26.7	-44.3	0.0	35				
		H(Sand)	20.0	-71.0	0.0	35				
		J(Clay)	18.3	-91.0	3.8	0				

[1] Elevations are referenced to NGVD 29 datum

Table 2.5S.4-38Bb Subsurface Conditions for Bearing Capacity Analysis for the STP 3 & 4 Control Buildings (Page 2 of 8)

Average Properties within the Foundation Deformation Zone for Bearing Capacity										
STP	Soil Selection Preference	Soil Layer	Thickness of Layer Below Mat (feet)	Top Elevation [1] (feet)	Shear Strength				Foundation Width, B (feet)	Effective Shear Depth, H' (feet)
					Layer		Average			
					c(ksf)	Φ(°)	c(ksf)	Φ(°)		
3	Design Water Table at el. +17.0 ft Short Term Conditions $c = S_u$ for Clays Backfill to el. +34.0 ft	Mat Foundation	[redacted]	-32.3	[redacted]	[redacted]	1.07	26.7	80.1	65.0
		Concrete Fill	2.0	-42.3	[redacted]	[redacted]				
		E(Sand)	26.7	-44.3	0.0	35				
		H(Sand)	20.0	-71.0	0.0	35				
		J(Clay)	18.3	-91.0	3.8	0				

[1] Elevations are referenced to NGVD 29 datum

Table 2.5S.4-38Bb Subsurface Conditions for Bearing Capacity Analysis for the STP 3 & 4 Control Buildings (Page 3 of 8)

Average Properties within the Foundation Deformation Zone for Bearing Capacity										
					Shear Strength					
					Layer		Average			
STP	Soil Selection Preference	Soil Layer	Thickness of Layer Below Mat (feet)	Top Elevation [1] (feet)	c(ksf)	Φ(°)	c(ksf)	Φ(°)	Foundation Width, B (feet)	Effective Shear Depth, H' (feet)
3	Alternate Water Table at el. -44.3 ft Long Term Conditions c and Φ' for Clays Backfill to el. +34.0 ft	Mat Foundation	!	-32.3	!	!	0.71	28.6	80.1	67.4
		Concrete Fill	2.0	-42.3	!	!				
		E(Sand)	26.7	-44.3	0.0	35				
		H(Sand)	20.0	-71.0	0.0	35				
		J(Clay)	20.7	-91.0	2.3	11				

[1] Elevations are referenced to NGVD 29 datum

Table 2.5S.4-38Bb Subsurface Conditions for Bearing Capacity Analysis for the STP 3 & 4 Control Buildings (Page 4 of 8)

Average Properties within the Foundation Deformation Zone for Bearing Capacity										
					Shear Strength					
					Layer		Average			
STP	Soil Selection Preference	Soil Layer	Thickness of Layer Below Mat (feet)	Top Elevation [1] (feet)	c(ksf)	Φ(°)	c(ksf)	Φ(°)	Foundation Width, B (feet)	Effective Shear Depth, H' (feet)
3	Design Water Table at el. +17.0 ft Long Term Conditions c' and Φ' for Clays Backfill to el. +34.0 ft	Mat Foundation	!	-32.3	!	!	0.71	28.6	80.1	67.4
		Concrete Fill	2.0	-42.3	!	!				
		E(Sand)	26.7	-44.3	0.0	35				
		H(Sand)	20.0	-71.0	0.0	35				
		J(Clay)	20.7	-91.0	2.3	11				

[1] Elevations are referenced to NGVD 29 datum

Table 2.5S.4-38Bb Subsurface Conditions for Bearing Capacity Analysis for the STP 3 & 4 Control Buildings (Page 5 of 8)

Average Properties within the Foundation Deformation Zone for Bearing Capacity										
					Shear Strength					
					Layer		Average			
STP	Soil Selection Preference	Soil Layer	Thickness of Layer Below Mat (feet)	Top Elevation [1] (feet)	c(ksf)	Φ(°)	c(ksf)	Φ(°)	Foundation Width, B (feet)	Effective Shear Depth, H' (feet)
4	Alternate Water Table at el. -44.25 ft Short Term Conditions c = S_u Clays Backfill to el. +34.0 ft	Mat Foundation	[illegible]	-32.3	[illegible]	[illegible]	2.04	16.6	80.1	53.7
		Concrete Fill	2.0	-42.3	[illegible]	[illegible]				
		E(Sand)	7.7	-44.3	0.0	35				
		F(Clay)	20.0	-52.0	3.4	0				
		H(Sand)	15.1	-72.0	0.0	35				
		J(Clay)	10.9	-87.1	3.8	0				

[1] Elevations are referenced to NGVD 29 datum

Table 2.5S.4-38Bb Subsurface Conditions for Bearing Capacity Analysis for the STP 3 & 4 Control Buildings (Page 6 of 8)

Average Properties within the Foundation Deformation Zone for Bearing Capacity										
					Shear Strength					
					Layer		Average			
STP	Soil Selection Preference	Soil Layer	Thickness of Layer Below Mat (feet)	Top Elevation [1] (feet)	c(ksf)	Φ(°)	c(ksf)	Φ(°)	Foundation Width, B (feet)	Effective Shear Depth, H' (feet)
4	Design Water Table at el. +17.0 ft Short Term Conditions c = S_u Clays Backfill to el. +34.0 ft	Mat Foundation	[illegible]	-32.3	[illegible]	[illegible]	2.04	16.6	80.1	53.7
		Concrete Fill	2.0	-42.3	[illegible]	[illegible]				
		E(Sand)	7.7	-44.3	0.0	35				
		F(Clay)	20.0	-52.0	3.4	0				
		H(Sand)	15.1	-72.0	0.0	35				
		J(Clay)	10.9	-87.1	3.8	0				

[1] Elevations are referenced to NGVD 29 datum

Table 2.5S.4-38Bb Subsurface Conditions for Bearing Capacity Analysis for the STP 3 & 4 Control Buildings (Page 7 of 8)

Average Properties within the Foundation Deformation Zone for Bearing Capacity										
					Shear Strength					
					Layer		Average			
STP	Soil Selection Preference	Soil Layer	Thickness of Layer Below Mat (feet)	Top Elevation [1] (feet)	c(ksf)	Φ(°)	c(ksf)	Φ(°)	Foundation Width, B (feet)	Effective Shear Depth, H' (feet)
4	Alternate Water Table at el. -44.25 ft Long Term Conditions c' and Φ' for Clays Backfill to el. +34.0 ft	Mat Foundation	[illegible]	-32.3	[illegible]	[illegible]	1.29	20.5	80.1	57.8
		Concrete Fill	2.0	-42.3	[illegible]	[illegible]				
		E(Sand)	7.7	-44.3	0.0	35				
		F(Clay)	20.0	-52.0	2.0	8				
		H(Sand)	15.0	-72.0	0.0	35				
		J(Clay)	15.1	-87.0	2.3	11				

[1] Elevations are referenced to NGVD 29 datum

Table 2.5S.4-38Bb Subsurface Conditions for Bearing Capacity Analysis for the STP 3 & 4 Control Buildings (Page 8 of 8)

Average Properties within the Foundation Deformation Zone for Bearing Capacity										
					Shear Strength					
					Layer		Average			
STP	Soil Selection Preference	Soil Layer	Thickness of Layer Below Mat (feet)	Top Elevation [1] (feet)	c(ksf)	Φ(°)	c(ksf)	Φ(°)	Foundation Width, B (feet)	Effective Shear Depth, H' (feet)
4	Design Water Table at el. +17.0 ft Long Term Conditions c' and Φ' for Clays Backfill to el. +34.0 ft	Mat Foundation	!	-32.3	!	!	1.29	20.5	80.1	57.8
		Concrete Fill	2.0	-42.3	!	!				
		E(Sand)	7.7	-44.3	0.0	35				
		F(Clay)	20.0	-52.0	2.0	8				
		H(Sand)	15.0	-72.0	0.0	35				
		J(Clay)	15.1	-87.0	2.3	11				

[1] Elevations are referenced to NGVD 29 datum

This table replaces COLA Rev. 2 Table 2.5S.4-39a "Subsurface Conditions for the STP 3 & 4 Radwaste Buildings" (Radwaste is no longer a Category 1 facility) to incorporate the new data for the Diesel Generator Fuel Oil Storage Vaults using the new methodology.

Table 2.5S.4-39A a Subsurface Conditions for Settlement Analysis for the STP 3 & 4 Diesel Generator Fuel Oil Storage Vaults (Page 1 of 6)

Soil Properties									
	Average Subsurface Conditions					Properties for Settlement Calculation			
	Depth (feet)		Elevation [1] (feet)				Unit Weight, γ (pcf)	Poisson's Ratio μ_d	Elastic Modulus E_d (ksf)
STP	Top	Bottom	Top	Bottom	Stratum	Stratum			
3 (No. 1)	0	4.0	1.0	5.0	Mat Foundation	Mat Foundation	*	*	*
	4.0	6.0	5.0	7.0	Concrete Fill	Concrete Fill	*	*	*
	6.0	49.3	7.0	50.3	Structural Fill	Structural Fill	134	0.30	3,000
	49.3	60.4	50.3	61.4	E(Sand)	E(Sand)	123	0.30	3,145
	60.4	80.4	61.4	81.4	F(Clay)	F(Clay)	125	0.15	1,970
	80.4	101.3	81.4	102.3	J(Clay)	J(Clay)	125	0.15	3,175
	101.3	110.4	102.3	111.4	J(Sand)	J(Sand)	125	0.30	4,755
	110.4	140.4	111.4	141.4	J(Clay)	J(Clay)	125	0.15	3,175
	140.4	141.4	141.4	142.4	J(Sand)	J(Sand)	125	0.30	4,755
	141.4	182.0	142.4	183.0	J(Clay)	J(Clay)	125	0.15	3,175
	182.0	197.0	183.0	198.0	K(Clay)	K(Clay)	124	0.15	3,335
	197.0	228.0	198.0	229.0	K(Sand)	K(Sand)	127	0.30	4,915
	228.0	233.0	229.0	234.0	L(Clay)	L(Clay)	124	0.15	2,965
	233.0	247.5	234.0	248.5	M(Sand)	M(Sand)	127	0.30	4,350
	247.5	309.0	248.5	310.0	N(Clay)	N(Clay)	123	0.15	6,020
	309.0	325.0	310.0	326.0	N(Sand)	N(Sand)	128	0.30	11,645
	325.0	330.0	326.0	331.0	N(Clay)	N(Clay)	123	0.15	6,020
	330.0	369.0	331.0	370.0	N(Sand)	N(Sand)	128	0.30	11,645
	369.0	376.0	370.0	377.0	N(Clay)	N(Clay)	123	0.15	6,020
	376.0	393.0	377.0	394.0	N(Sand)	N(Sand)	128	0.30	11,645
	393.0	418.0	394.0	419.0	N(Clay)	N(Clay)	123	0.15	6,020
	418.0	434.0	419.0	435.0	N(Sand)	N(Sand)	128	0.30	11,645
	434.0	569.0	435.0	570.0	N(Clay)	N(Clay)	123	0.15	6,020
	569.0	645.0	570.0	646.0	Deep Silt/Clay Vs=1585	Silt/Clay	129	0.15	11,190
	645.0	745.0	646.0	746.0	Deep Silty Sand Vs=1585	Silty Sand	126	0.30	12,780
	745.0	845.0	746.0	846.0	Deep Silt/Clay Vs=1585	Silt/Clay	130	0.15	11,275
	845.0	965.0	846.0	966.0	Deep Silty Sand Vs=1585	Silty Sand	130	0.30	13,185
	965.0	1265.0	966.0	1266.0	Deep Silty Sand Vs=2350	Silty Sand	130	0.30	28,985
	1265.0	1895.0	1266.0	1896.0	Deep Interbedded Vs=2550	Claystone/ Siltstone*	130	0.30	34,130
	1895.0	2465.0	1896.0	2466.0	Deep Interbedded Vs=2850	Claystone/ Sand/Silt	135	0.30	44,270

[1] Elevations are referenced to NGVD 29 datum

*/Clay/Sand/Silt

Table 2.5S.4-39Aa Subsurface Conditions for Settlement Analysis for the STP 3 & 4 Diesel Generator Fuel Oil Storage Vaults (Page 2 of 6)

Soil Properties									
	Average Subsurface Conditions					Properties for Settlement Calculation			
	Depth (feet)		Elevation [1] (feet)				Unit Weight,	Poisson's	Elastic Modulus
STP	Top	Bottom	Top	Bottom	Stratum	Stratum	γ (pcf)	Ratio μ_d	E_d (ksf)
3 (No. 2)	0	4.0	-1.0	-5.0	Mat Foundation	Mat Foundation	-	-	-
	4.0	6.0	-5.0	-7.0	Concrete Fill	Concrete Fill	-	-	-
	6.0	49.3	-7.0	-50.3	Structural Fill	Structural Fill	134	0.30	3,000
	49.3	50.9	-50.3	-51.9	E(Sand)	E(Sand)	123	0.30	3,145
	50.9	80.6	-51.9	-81.6	F(Clay)	F(Clay)	125	0.15	1,970
	80.6	90.6	-81.6	-91.6	H(Sand)	H(Sand)	125	0.30	3,240
	90.6	120.6	-91.6	-121.6	J(Clay)	J(Clay)	125	0.15	3,175
	120.6	130.6	-121.6	-131.6	J(Sand)	J(Sand)	125	0.30	4,755
	130.6	141.2	-131.6	-142.2	J(Clay)	J(Clay)	125	0.15	3,175
	141.2	150.6	-142.2	-151.6	J(Sand)	J(Sand)	125	0.30	4,755
	150.6	182.0	-151.6	-183.0	J(Clay)	J(Clay)	125	0.15	3,175
	182.0	197.0	-183.0	-198.0	K(Clay)	K(Clay)	124	0.15	3,335
	197.0	228.0	-198.0	-229.0	K(Sand)	K(Sand)	127	0.30	4,915
	228.0	233.0	-229.0	-234.0	L(Clay)	L(Clay)	124	0.15	2,965
	233.0	247.5	-234.0	-248.5	M(Sand)	M(Sand)	127	0.30	4,350
	247.5	309.0	-248.5	-310.0	N(Clay)	N(Clay)	123	0.15	6,020
	309.0	325.0	-310.0	-326.0	N(Sand)	N(Sand)	128	0.30	11,645
	325.0	330.0	-326.0	-331.0	N(Clay)	N(Clay)	123	0.15	6,020
	330.0	369.0	-331.0	-370.0	N(Sand)	N(Sand)	128	0.30	11,645
	369.0	376.0	-370.0	-377.0	N(Clay)	N(Clay)	123	0.15	6,020
	376.0	393.0	-377.0	-394.0	N(Sand)	N(Sand)	128	0.30	11,645
	393.0	418.0	-394.0	-419.0	N(Clay)	N(Clay)	123	0.15	6,020
	418.0	434.0	-419.0	-435.0	N(Sand)	N(Sand)	128	0.30	11,645
	434.0	569.0	-435.0	-570.0	N(Clay)	N(Clay)	123	0.15	6,020
	569.0	645.0	-570.0	-646.0	Deep Silt/Clay Vs=1585	Silt/Clay	129	0.15	11,190
	645.0	745.0	-646.0	-746.0	Deep Silty Sand Vs=1585	Silty Sand	126	0.30	12,780
	745.0	845.0	-746.0	-846.0	Deep Silt/Clay Vs=1585	Silt/Clay	130	0.15	11,275
	845.0	965.0	-846.0	-966.0	Deep Silty Sand Vs=1585	Silty Sand	130	0.30	13,185
	965.0	1265.0	-966.0	-1266.0	Deep Silty Sand Vs=2350	Silty Sand	130	0.30	28,985
	1265.0	1895.0	-1266.0	-1896.0	Deep Interbedded Vs=2550	Claystone/ Siltstone*	130	0.30	34,130
	1895.0	2465.0	-1896.0	-2466.0	Deep Interbedded Vs=2850	Claystone/ Sand/Silt	135	0.30	44,270

[1] Elevations are referenced to NGVD 29 datum
*/Clay/Sand/Silt

Table 2.5S.4-39Aa Subsurface Conditions for Settlement Analysis for the STP 3 & 4 Diesel Generator Fuel Oil Storage Vaults (Page 3 of 6)

	Average Subsurface Conditions				Soil Properties		Properties for Settlement Calculation		
	Depth (feet)		Elevation [1] (feet)				Unit Weight,	Poisson's	Elastic Modulus
STP	Top	Bottom	Top	Bottom	Stratum	Stratum	γ_d (pcf)	Ratio μ_d	E_d (ksf)
3 (No. 3)	0	4.0	-1.0	-5.0	Mat Foundation	Mat Foundation	⋮	⋮	⋮
	4.0	6.0	-5.0	-7.0	Concrete Fill	Concrete Fill	⋮	⋮	⋮
	6.0	33.0	-7.0	-34.0	Structural Fill	Structural Fill	134	0.30	3,000
	33.0	37.3	-34.0	-38.3	D(Clay)	D(Clay)	122	0.15	1,865
	37.3	57.3	-38.3	-58.3	E(Sand)	E(Sand)	123	0.30	3,145
	57.3	67.1	-58.3	-68.1	F(Clay)	F(Clay)	125	0.15	1,970
	67.1	77.3	-68.1	-78.3	H(Sand)	H(Sand)	125	0.30	3,240
	77.3	107.3	-78.3	-108.3	J(Clay)	J(Clay)	125	0.15	3,175
	107.3	117.6	-108.3	-118.6	J(Sand)	J(Sand)	125	0.30	4,755
	117.6	147.7	-118.6	-148.7	J(Clay)	J(Clay)	125	0.15	3,175
	147.7	152.3	-148.7	-153.3	J(Sand)	J(Sand)	125	0.30	4,755
	152.3	182.0	-153.3	-183.0	J(Clay)	J(Clay)	125	0.15	3,175
	182.0	197.0	-183.0	-198.0	K(Clay)	K(Clay)	124	0.15	3,335
	197.0	228.0	-198.0	-229.0	K(Sand)	K(Sand)	127	0.30	4,915
	228.0	233.0	-229.0	-234.0	L(Clay)	L(Clay)	124	0.15	2,965
	233.0	247.5	-234.0	-248.5	M(Sand)	M(Sand)	127	0.30	4,350
	247.5	309.0	-248.5	-310.0	N(Clay)	N(Clay)	123	0.15	6,020
	309.0	325.0	-310.0	-326.0	N(Sand)	N(Sand)	128	0.30	11,645
	325.0	330.0	-326.0	-331.0	N(Clay)	N(Clay)	123	0.15	6,020
	330.0	369.0	-331.0	-370.0	N(Sand)	N(Sand)	128	0.30	11,645
	369.0	376.0	-370.0	-377.0	N(Clay)	N(Clay)	123	0.15	6,020
	376.0	393.0	-377.0	-394.0	N(Sand)	N(Sand)	128	0.30	11,645
	393.0	418.0	-394.0	-419.0	N(Clay)	N(Clay)	123	0.15	6,020
	418.0	434.0	-419.0	-435.0	N(Sand)	N(Sand)	128	0.30	11,645
	434.0	569.0	-435.0	-570.0	N(Clay)	N(Clay)	123	0.15	6,020
	569.0	645.0	-570.0	-646.0	Deep Silt/Clay Vs=1585	Silt/Clay	129	0.15	11,190
	645.0	745.0	-646.0	-746.0	Deep Silty Sand Vs=1585	Silty Sand	126	0.30	12,780
	745.0	845.0	-746.0	-846.0	Deep Silt/Clay Vs=1585	Silt/Clay	130	0.15	11,275
	845.0	965.0	-846.0	-966.0	Deep Silty Sand Vs=1585	Silty Sand	130	0.30	13,185
	965.0	1265.0	-966.0	-1266.0	Deep Silty Sand Vs=2350	Silty Sand	130	0.30	28,985
	1265.0	1895.0	-1266.0	-1896.0	Deep Interbedded Vs=2550	Claystone/ Siltstone*	130	0.30	34,130
	1895.0	2465.0	-1896.0	-2466.0	Deep Interbedded Vs=2850	Claystone/ Sand/Silt	135	0.30	44,270

[1] Elevations are referenced to NGVD 29 datum
*/Clay/Sand/Silt

Table 2.5S.4-39Aa Subsurface Conditions for Settlement Analysis for the STP 3 & 4 Diesel Generator Fuel Oil Storage Vaults (Page 4 of 6)

Soil Properties									
	Average Subsurface Conditions					Properties for Settlement Calculation			
	Depth (feet)		Elevation [1] (feet)				Unit Weight,	Poisson's	Elastic Modulus
STP	Top	Bottom	Top	Bottom	Stratum	Stratum	γ (pcf)	Ratio μ_d	E_d (ksf)
4 (No. 1)	0	4.0	-1.0	-5.0	Mat Foundation	Mat Foundation	[illegible]	[illegible]	[illegible]
	4.0	6.0	-5.0	-7.0	Concrete Fill	Concrete Fill	[illegible]	[illegible]	[illegible]
	6.0	49.3	-7.0	-50.3	Structural Fill	Structural Fill	134	0.30	3,000
	49.3	55.2	-50.3	-56.2	E(Sand)	E(Sand)	123	0.30	3,145
	55.2	75.2	-56.2	-76.2	F(Clay)	F(Clay)	125	0.15	1,970
	75.2	85.2	-76.2	-86.2	J(Clay)	J(Clay)	125	0.15	3,175
	85.2	146.0	-86.2	-147.0	J(Sand)	J(Sand)	125	0.30	4,755
	146.0	184.0	-147.0	-185.0	J(Clay)	J(Clay)	125	0.15	3,175
	184.0	206.0	-185.0	-207.0	K(Clay)	K(Clay)	124	0.15	3,335
	206.0	227.0	-207.0	-228.0	K(Sand)	K(Sand)	127	0.30	4,915
	227.0	232.0	-228.0	-233.0	L(Clay)	L(Clay)	124	0.15	2,965
	232.0	247.0	-233.0	-248.0	M(Sand)	M(Sand)	127	0.30	4,350
	247.0	303.0	-248.0	-304.0	N(Clay)	N(Clay)	123	0.15	6,020
	303.0	321.0	-304.0	-322.0	N(Sand)	N(Sand)	128	0.30	11,645
	321.0	332.0	-322.0	-333.0	N(Clay)	N(Clay)	123	0.15	6,020
	332.0	358.0	-333.0	-359.0	N(Sand)	N(Sand)	128	0.30	11,645
	358.0	368.0	-359.0	-369.0	N(Clay)	N(Clay)	123	0.15	6,020
	368.0	388.0	-369.0	-389.0	N(Sand)	N(Sand)	128	0.30	11,645
	388.0	473.0	-389.0	-474.0	N(Clay)	N(Clay)	123	0.15	6,020
	473.0	508.0	-474.0	-509.0	N(Sand)	N(Sand)	128	0.30	11,645
	508.0	569.0	-509.0	-570.0	N(Clay)	N(Clay)	123	0.15	6,020
	569.0	645.0	-570.0	-646.0	Deep Silt/Clay Vs=1585	Silt/Clay	129	0.15	11,190
	645.0	745.0	-646.0	-746.0	Deep Silty Sand Vs=1585	Silty Sand	126	0.30	12,780
	745.0	845.0	-746.0	-846.0	Deep Silt/Clay Vs=1585	Silt/Clay	130	0.15	11,275
	845.0	965.0	-846.0	-966.0	Deep Silty Sand Vs=1585	Silty Sand	130	0.30	13,185
	965.0	1265.0	-966.0	-1266.0	Deep Silty Sand Vs=2350	Silty Sand	130	0.30	28,985
	1265.0	1895.0	-1266.0	-1896.0	Deep Interbedded Vs=2550	Claystone/ Siltstone*	130	0.30	34,130
	1895.0	2465.0	-1896.0	-2466.0	Deep Interbedded Vs=2850	Claystone/ Sand/Silt	135	0.30	44,270

[1] Elevations are referenced to NGVD 29 datum
*/Clay/Sand/Silt

Table 2.5S.4-39Aa Subsurface Conditions for Settlement Analysis for the STP 3 & 4 Diesel Generator Fuel Oil Storage Vaults (Page 5 of 6)

Soil Properties									
	Average Subsurface Conditions					Properties for Settlement Calculation			
	Depth (feet)		Elevation [1] (feet)				Unit Weight,	Poisson's	Elastic Modulus
STP	Top	Bottom	Top	Bottom	Stratum	Stratum	γ (pcf)	Ratio μ_d	E_d (ksf)
4 (No. 2)	0	4.0	1.0	-5.0	Mat Foundation	Mat Foundation			
	4.0	6.0	-5.0	-7.0	Concrete Fill	Concrete Fill			
	6.0	49.3	-7.0	-50.3	Structural Fill	Structural Fill	134	0.30	3,000
	49.3	56.2	-30.0	-57.2	E(Sand)	E(Sand)	123	0.30	3,145
	56.2	76.5	-57.2	-77.5	F(Clay)	F(Clay)	125	0.15	1,970
	76.5	106.2	-77.5	-107.2	J(Clay)	J(Clay)	125	0.15	3,175
	106.2	131.7	-107.2	-132.7	J(Sand)	J(Sand)	125	0.30	4,755
	131.7	137.4	-132.7	-138.4	J(Clay)	J(Clay)	125	0.15	3,175
	137.4	184.0	-138.4	-185.0	J(Sand)	J(Sand)	125	0.30	4,755
	184.0	206.0	-185.0	-207.0	K(Clay)	K(Clay)	124	0.15	3,335
	206.0	227.0	-207.0	-228.0	K(Sand)	K(Sand)	127	0.30	4,915
	227.0	232.0	-228.0	-233.0	L(Clay)	L(Clay)	124	0.15	2,965
	232.0	247.0	-233.0	-248.0	M(Sand)	M(Sand)	127	0.30	4,350
	247.0	303.0	-248.0	-304.0	N(Clay)	N(Clay)	123	0.15	6,020
	303.0	321.0	-304.0	-322.0	N(Sand)	N(Sand)	128	0.30	11,645
	321.0	332.0	-322.0	-333.0	N(Clay)	N(Clay)	123	0.15	6,020
	332.0	358.0	-333.0	-359.0	N(Sand)	N(Sand)	128	0.30	11,645
	358.0	368.0	-359.0	-369.0	N(Clay)	N(Clay)	123	0.15	6,020
	368.0	388.0	-369.0	-389.0	N(Sand)	N(Sand)	128	0.30	11,645
	388.0	473.0	-389.0	-474.0	N(Clay)	N(Clay)	123	0.15	6,020
	473.0	508.0	-474.0	-509.0	N(Sand)	N(Sand)	128	0.30	11,645
	508.0	569.0	-509.0	-570.0	N(Clay)	N(Clay)	123	0.15	6,020
	569.0	645.0	-570.0	-646.0	Deep Silt/Clay Vs=1585	Silt/Clay	129	0.15	11,190
	645.0	745.0	-646.0	-746.0	Deep Silty Sand Vs=1585	Silty Sand	126	0.30	12,780
	745.0	845.0	-746.0	-846.0	Deep Silt/Clay Vs=1585	Silt/Clay	130	0.15	11,275
	845.0	965.0	-846.0	-966.0	Deep Silty Sand Vs=1585	Silty Sand	130	0.30	13,185
	965.0	1265.0	-966.0	-1266.0	Deep Silty Sand Vs=2350	Silty Sand	130	0.30	28,985
	1265.0	1895.0	-1266.0	-1896.0	Deep Interbedded Vs=2550	Claystone/ Siltstone*	130	0.30	34,130
	1895.0	2465.0	-1896.0	-2466.0	Deep Interbedded Vs=2850	Claystone/ Sand/Silt	135	0.30	44,270

[1] Elevations are referenced to NGVD 29 datum
*/Clay/Sand/Silt

Table 2.5S.4-39Aa Subsurface Conditions for Settlement Analysis for the STP 3 & 4 Diesel Generator Fuel Oil Storage Vaults (Page 6 of 6)

Soil Properties									
	Average Subsurface Conditions					Properties for Settlement Calculation			
	Depth (feet)		Elevation [1] (feet)				Unit Weight, γ (pcf)	Poisson's Ratio μ_d	Elastic Modulus E_d (ksf)
STP	Top	Bottom	Top	Bottom	Stratum	Stratum			
4 (No. 3)	0	4.0	1.0	-5.0	Mat Foundation	Mat Foundation	-	-	-
	4.0	6.0	-5.0	-7.0	Concrete Fill	Concrete Fill	-	-	-
	6.0	33.0	-7.0	-34.0	Structural Fill	Structural Fill	134	0.30	3,000
	33.0	56.9	-34.0	-57.9	E(Sand)	E(Sand)	123	0.30	3,145
	56.9	77.2	-57.9	-78.2	F(Clay)	F(Clay)	125	0.15	1,970
	77.2	116.9	-78.2	-117.9	J(Clay)	J(Clay)	125	0.15	3,175
	116.9	152.0	-117.9	-153.0	J(Sand)	J(Sand)	125	0.30	4,755
	152.0	184.0	-153.0	-185.0	J(Clay)	J(Clay)	125	0.15	3,175
	184.0	206.0	-185.0	-207.0	K(Clay)	K(Clay)	124	0.15	3,335
	206.0	227.0	-207.0	-228.0	K(Sand)	K(Sand)	127	0.30	4,915
	227.0	232.0	-228.0	-233.0	L(Clay)	L(Clay)	124	0.15	2,965
	232.0	247.0	-233.0	-248.0	M(Sand)	M(Sand)	127	0.30	4,350
	247.0	303.0	-248.0	-304.0	N(Clay)	N(Clay)	123	0.15	6,020
	303.0	321.0	-304.0	-322.0	N(Sand)	N(Sand)	128	0.30	11,645
	321.0	332.0	-322.0	-333.0	N(Clay)	N(Clay)	123	0.15	6,020
	332.0	358.0	-333.0	-359.0	N(Sand)	N(Sand)	128	0.30	11,645
	358.0	368.0	-359.0	-369.0	N(Clay)	N(Clay)	123	0.15	6,020
	368.0	388.0	-369.0	-389.0	N(Sand)	N(Sand)	128	0.30	11,645
	388.0	473.0	-389.0	-474.0	N(Clay)	N(Clay)	123	0.15	6,020
	473.0	508.0	-474.0	-509.0	N(Sand)	N(Sand)	128	0.30	11,645
	508.0	569.0	-509.0	-570.0	N(Clay)	N(Clay)	123	0.15	6,020
	569.0	645.0	-570.0	-646.0	Deep Silt/Clay Vs=1585	Silt/Clay	129	0.15	11,190
	645.0	745.0	-646.0	-746.0	Deep Silty Sand Vs=1585	Silty Sand	126	0.30	12,780
	745.0	845.0	-746.0	-846.0	Deep Silt/Clay Vs=1585	Silt/Clay	130	0.15	11,275
	845.0	965.0	-846.0	-966.0	Deep Silty Sand Vs=1585	Silty Sand	130	0.30	13,185
	965.0	1265.0	-966.0	-1266.0	Deep Silty Sand Vs=2350	Silty Sand	130	0.30	28,985
	1265.0	1895.0	-1266.0	-1896.0	Deep Interbedded Vs=2550	Claystone/ Siltstone*	130	0.30	34,130
	1895.0	2465.0	-1896.0	-2466.0	Deep Interbedded Vs=2850	Claystone/ Sand/Silt	135	0.30	44,270

[1] Elevations are referenced to NGVD 29 datum
*/Clay/Sand/Silt

This replaces COLA Rev. 2 Table 2.5S.4-39b "Subsurface conditions for the STP 3 & 4 Radwaste building" (Radwaste is no longer a Category 1 facility) to incorporate the new data for the Diesel Generator Fuel Oil Storage Vaults using the new methodology.

Table 2.5S.4-39Bb Subsurface Conditions for Bearing Capacity Analysis for the STP 3 & 4 Diesel Generator Fuel Oil Storage Vaults (Page 1 of 24)

Average Properties within the Foundation Deformation Zone for Bearing Capacity										
STP	Soil Selection Preference	Soil Layer	Thickness of Layer Below Mat (feet)	Top Elevation [1] (feet)	Shear Strength				Foundation Width, B (feet)	Effective Shear Depth, H' (feet)
					Layer		Average			
					c(ksf)	Φ(°)	c(ksf)	Φ(°)		
3 (No. 1)	Assume Failure Along East or West Edge of Mat Alternate Water Table at el. -7.0 ft Short Term Conditions c = S_u for Clays Backfill to el. +34.0 ft	Mat Foundation	[redacted]	-1.0	[redacted]	[redacted]	0.0	36.0	44.0	43.2
		Concrete Fill	2.0	-5.0	[redacted]	[redacted]				
		Structural Fill	43.2	-7.0	0.0	36				

[1] Elevations are referenced to NGVD 29 datum

Table 2.5S.4-39Bb Subsurface Conditions for Bearing Capacity Analysis for the STP 3 & 4 Diesel Generator Fuel Oil Storage Vaults (Page 2 of 24)

Average Properties within the Foundation Deformation Zone for Bearing Capacity										
					Shear Strength					
					Layer		Average			
STP	Soil Selection Preference	Soil Layer	Thickness of Layer Below Mat (feet)	Top Elevation [1] (feet)	c(ksf)	Φ(°)	c(ksf)	Φ(°)	Foundation Width, B (feet)	Effective Shear Depth, H' (feet)
3 (No. 1)	Assume Failure Along East or West Edge of Mat Design Water Table at el. +17.0 ft Short Term Conditions c = S_u for Clays Backfill to el. +34.0 ft	Mat Foundation	[redacted]	-1.0	[redacted]	[redacted]	0.0	36.0	44.0	43.2
		Concrete Fill	2.0	-5.0	[redacted]	[redacted]				
		Structural Fill	43.2	-7.0	0.0	36				

[1] Elevations are referenced to NGVD 29 datum

Table 2.5S.4-39B~~b~~ Subsurface Conditions for Bearing Capacity Analysis for the STP 3 & 4 Diesel Generator Fuel Oil Storage Vaults (Page 3 of 24)

Average Properties within the Foundation Deformation Zone for Bearing Capacity										
					Shear Strength					
					Layer		Average			
STP	Soil Selection Preference	Soil Layer	Thickness of Layer Below Mat (feet)	Top Elevation [1] (feet)	c(ksf)	Φ(°)	c(ksf)	Φ(°)	Foundation Width, B (feet)	Effective Shear Depth, H' (feet)
3 (No. 1)	Assume Failure Along East or West Edge of Mat Alternate Water Table at el. -7.0 ft Long Term Conditions c' and Φ' for Clays Backfill to el. +34.0 ft	Mat Foundation	-	1.0	-	-	0.0	36.0	44.0	43.2
		Concrete Fill	2.0	-5.0	-	-				
		Structural Fill	43.2	-7.0	0.0	36				

[1] Elevations are referenced to NGVD 29 datum.

Table 2.5S.4-39Bb Subsurface Conditions for Bearing Capacity Analysis for the STP 3 & 4 Diesel Generator Fuel Oil Storage Vaults (Page 4 of 24)

Average Properties within the Foundation Deformation Zone for Bearing Capacity										
					Shear Strength					
					Layer		Average			
STP	Soil Selection Preference	Soil Layer	Thickness of Layer Below Mat (feet)	Top Elevation [1] (feet)	c(ksf)	Φ(°)	c(ksf)	Φ(°)	Foundation Width, B (feet)	Effective Shear Depth, H' (feet)
3 (No. 1)	Assume Failure Along East or West Edge of Mat Design Water Table at el. +17.0 ft Long Term Conditions c' and Φ' for Clays Backfill to el. +34.0 ft	Mat Foundation	[redacted]	-1.0	[redacted]	[redacted]	0.0	36.0	44.0	43.2
		Concrete Fill	2.0	-5.0	[redacted]	[redacted]				
		Structural Fill	43.2	-7.0	0.0	36				

[1] Elevations are referenced to NGVD 29 datum

Table 2.5S.4-39Bb Subsurface Conditions for Bearing Capacity Analysis for the STP 3 & 4 Diesel Generator Fuel Oil Storage Vaults (Page 5 of 24)

Average Properties within the Foundation Deformation Zone for Bearing Capacity										
					Shear Strength					
					Layer		Average			
STP	Soil Selection Preference	Soil Layer	Thickness of Layer Below Mat (feet)	Top Elevation [1] (feet)	c(ksf)	Φ(°)	c(ksf)	Φ(°)	Foundation Width, B (feet)	Effective Shear Depth, H' (feet)
3 (No. 2)	Assume Failure Along East or West Edge of Mat Alternate Water Table at el. -7.0 ft Short Term Conditions c = S_u for Clays Backfill to el. +34.0 ft	Mat Foundation	[illegible]	-1.0	[illegible]	[illegible]	0.0	36.0	44.0	43.2
		Concrete Fill	2.0	-5.0	[illegible]	[illegible]				
		Structural Fill	43.2	-7.0	0.0	36				

[1] Elevations are referenced to NGVD 29 datum

Table 2.5S.4-39B~~b~~ Subsurface Conditions for Bearing Capacity Analysis for the STP 3 & 4 Diesel Generator Fuel Oil Storage Vaults (Page 6 of 24)

Average Properties within the Foundation Deformation Zone for Bearing Capacity										
					Shear Strength					
					Layer		Average			
STP	Soil Selection Preference	Soil Layer	Thickness of Layer Below Mat (feet)	Top Elevation [1] (feet)	c(ksf)	Φ(°)	c(ksf)	Φ(°)	Foundation Width B (feet)	Effective Shear Depth H' (feet)
3 (No. 2)	Assume Failure Along East or West Edge of Mat	Mat Foundation	[illegible]	-1.0	[illegible]	[illegible]	0.0	36.0	44.0	43.2
	Design Water Table at el. +17.0 ft	Concrete Fill	2.0	-5.0	[illegible]	[illegible]				
	Short Term Conditions	Structural Fill	43.2	-7.0	0.0	36				
	c = S_u for Clays									
	Backfill to el. +34.0 ft									

[1] Elevations are referenced to NGVD 29 datum

Table 2.5S.4-39Bb Subsurface Conditions for Bearing Capacity Analysis for the STP 3 & 4 Diesel Generator Fuel Oil Storage Vaults (Page 7of 24)

Average Properties within the Foundation Deformation Zone for Bearing Capacity										
					Shear Strength					
					Layer		Average			
STP	Soil Selection Preference	Soil Layer	Thickness of Layer Below Mat (feet)	Top Elevation [1] (feet)	c(ksf)	Φ(°)	c(ksf)	Φ(°)	Foundation Width, B (feet)	Effective Shear Depth, H' (feet)
3 (No. 2)	Assume Failure Along East or West Edge of Mat Alternate Water Table at el. -7.0 ft Long Term Conditions c' and Φ' for Clays Backfill to el. +34.0 ft	Mat Foundation	!	-1.0	!	!	0.0	36.0	44.0	43.2
		Concrete Fill	2.0	-5.0	!	!				
		Structural Fill	43.2	-7.0	0.0	36				

[1] Elevations are referenced to NGVD 29 datum

Table 2.5S.4-39Bb Subsurface Conditions for Bearing Capacity Analysis for the STP 3 & 4 Diesel Generator Fuel Oil Storage Vaults (Page 8 of 24)

Average Properties within the Foundation Deformation Zone for Bearing Capacity										
					Shear Strength					
					Layer		Average			
STP	Soil Selection Preference	Soil Layer	Thickness of Layer Below Mat (feet)	Top Elevation [1] (feet)	c(ksf)	Φ(°)	c(ksf)	Φ(°)	Foundation Width, B (feet)	Effective Shear Depth, H' (feet)
3 (No. 2)	Assume Failure Along East or West Edge of Mat Design Water Table at el. +17.0 ft Long Term Conditions c' and Φ' for Clays Backfill to el. +34.0 ft	Mat Foundation	[redacted]	1.0	[redacted]	[redacted]	0.0	36.0	44.0	43.2
		Concrete Fill	2.0	-5.0	[redacted]	[redacted]				
		Structural Fill	43.2	-7.0	0.0	36				

[1] Elevations are referenced to NGVD 29 datum

Table 2.5S.4-39B~~b~~ Subsurface Conditions for Bearing Capacity Analysis for the STP 3 & 4 Diesel Generator Fuel Oil Storage Vaults (Page 9 of 24)

Average Properties within the Foundation Deformation Zone for Bearing Capacity										
					Shear Strength					
					Layer		Average			
STP	Soil Selection Preference	Soil Layer	Thickness of Layer Below Mat (feet)	Top Elevation [1] (feet)	c(ksf)	Φ(°)	c(ksf)	Φ(°)	Foundation Width, B (feet)	Effective Shear Depth, H' (feet)
3 (No. 3)	Assume Failure Along North or South Edge of Mat Alternate Water Table at el. -7.0 ft Short Term Conditions c = S_u for Clays Backfill to el. +34.0 ft	Mat Foundation	[redacted]	-1.0	[redacted]	[redacted]	0.32	32.7	44.0	40.3
		Concrete Fill	2.0	-5.0	[redacted]	[redacted]				
		Structural Fill	27.0	-7.0	0.0	36				
		D(Clay)	4.3	-34.0	3.0	0				
		E(Sand)	9.0	-38.3	0.0	35				

[1] Elevations are referenced to NGVD 29 datum

Table 2.5S.4-39Bb Subsurface Conditions for Bearing Capacity Analysis for the STP 3 & 4 Diesel Generator Fuel Oil Storage Vaults (Page 10 of 24)

Average Properties within the Foundation Deformation Zone for Bearing Capacity										
					Shear Strength					
					Layer		Average			
STP	Soil Selection Preference	Soil Layer	Thickness of Layer Below Mat (feet)	Top Elevation [1] (feet)	c(ksf)	Φ(°)	c(ksf)	Φ(°)	Foundation Width, B (feet)	Effective Shear Depth, H' (feet)
3 (No. 3)	Assume Failure Along North or South Edge of Mat Design Water Table at el. +17.0 ft Short Term Conditions $c_u = S_u$ for Clays Backfill to el. +34.0 ft	Mat Foundation	[illegible]	-1.0	[illegible]	[illegible]	0.32	32.7	44.0	40.3
		Concrete Fill	2.0	-5.0	[illegible]	[illegible]				
		Structural Fill	27.0	-7.0	0.0	36				
		D(Clay)	4.3	-34.0	3.0	0				
		E(Sand)	9.0	-38.3	0.0	35				

[1] Elevations are referenced to NGVD 29 datum

Table 2.5S.4-39Bb Subsurface Conditions for Bearing Capacity Analysis for the STP 3 & 4 Diesel Generator Fuel Oil Storage Vaults (Page 11 of 24)

Average Properties within the Foundation Deformation Zone for Bearing Capacity										
					Shear Strength					
					Layer		Average			
STP	Soil Selection Preference	Soil Layer	Thickness of Layer Below Mat (feet)	Top Elevation [1] (feet)	c(ksf)	Φ(°)	c(ksf)	Φ(°)	Foundation Width, B (feet)	Effective Shear Depth, H' (feet)
3 (No. 3)	Assume Failure Along North or South Edge of Mat Alternate Water Table at el. -7.0 ft Long Term Conditions c' and Φ' for Clays Backfill to el. +34.0 ft	Mat Foundation	!	-1.0	!	!	0.12	34.0	44.0	41.4
		Concrete Fill	2.0	-5.0	!	!				
		Structural Fill	27.0	-7.0	0.0	36				
		D(Clay)	4.3	-34.0	1.2	16				
		E(Sand)	10.1	-38.3	0	35				

[1] Elevations are referenced to NGVD 29 datum

Table 2.5S.4-39Bb Subsurface Conditions for Bearing Capacity Analysis for the STP 3 & 4 Diesel Generator Fuel Oil Storage Vaults (Page 12 of 24)

Average Properties within the Foundation Deformation Zone for Bearing Capacity										
					Shear Strength					
					Layer		Average			
STP	Soil Selection Preference	Soil Layer	Thickness of Layer Below Mat (feet)	Top Elevation [1] (feet)	c(ksf)	Φ(°)	c(ksf)	Φ(°)	Foundation Width, B (feet)	Effective Shear Depth, H' (feet)
3 (No. 3)	Assume Failure Along North or South Edge of Mat Design Water Table at el. +17.0 ft Long Term Conditions c' and Φ' for Clays Backfill to el. +34.0 ft	Mat Foundation	!	-1.0	!	!	0.12	34.0	44.0	41.4
		Concrete Fill	2.0	-5.0	!	!				
		Structural Fill	27.0	-7.0	0.0	36				
		D(Clay)	4.3	-34.0	1.2	16				
		E(Sand)	10.1	-38.3	0.0	35				

[1] Elevations are referenced to NGVD 29 datum

Table 2.5S.4-39Bb Subsurface Conditions for Bearing Capacity Analysis for the STP 3 & 4 Diesel Generator Fuel Oil Storage Vaults (Page 13 of 24)

Average Properties within the Foundation Deformation Zone for Bearing Capacity										
					Shear Strength					
					Layer		Average			
STP	Soil Selection Preference	Soil Layer	Thickness of Layer Below Mat (feet)	Top Elevation [1] (feet)	c(ksf)	Φ(°)	c(ksf)	Φ(°)	Foundation Width, B (feet)	Effective Shear Depth, H' (feet)
4 (No. 1)	Assume Failure Along East or West Edge of Mat	Mat Foundation	!	1.0	!	!	0.00	36.0	44.0	43.2
	Alternate Water Table at el. -7.0 ft	Concrete Fill	2.0	-5.0	!	!				
	Short Term Conditions	Structural Fill	43.2	-7.0	0.0	36				
	$c = S_u$ for Clays									
	Backfill to el. +34.0 ft									

[1] Elevations are referenced to NGVD 29 datum

Table 2.5S.4-39Bb Subsurface Conditions for Bearing Capacity Analysis for the STP 3 & 4 Diesel Generator Fuel Oil Storage Vaults (Page 14 of 24)

Average Properties within the Foundation Deformation Zone for Bearing Capacity										
					Shear Strength					
					Layer		Average			
STP	Soil Selection Preference	Soil Layer	Thickness of Layer Below Mat (feet)	Top Elevation [1] (feet)	c(ksf)	Φ(°)	c(ksf)	Φ(°)	Foundation Width, B (feet)	Effective Shear Depth, H' (feet)
4 (No. 1)	Assume Failure Along East or West Edge of Mat Design Water Table at el. -17.0 ft Short Term Conditions $c = S_u$ for Clays Backfill to el. +34.0 ft	Mat Foundation	[redacted]	-1.0	[redacted]	[redacted]	0.00	36.0	44.0	43.2
		Concrete Fill	2.0	-5.0	[redacted]	[redacted]				
		Structural Fill	43.2	-7.0	0.0	36				

[1] Elevations are referenced to NGVD 29 datum

Table 2.5S.4-39Bb Subsurface Conditions for Bearing Capacity Analysis for the STP 3 & 4 Diesel Generator Fuel Oil Storage Vaults (Page 15 of 24)

Average Properties within the Foundation Deformation Zone for Bearing Capacity										
					Shear Strength					
					Layer		Average			
STP	Soil Selection Preference	Soil Layer	Thickness of Layer Below Mat (feet)	Top Elevation [1] (feet)	c(ksf)	Φ(°)	c(ksf)	Φ(°)	Foundation Width, B (feet)	Effective Shear Depth, H' (feet)
4 (No. 1)	Assume Failure Along East or West Edge of Mat Alternate Water Table at el. -7.0 ft Long Term Conditions c' and Φ' for Clays Backfill to el. +34.0 ft	Mat Foundation	[redacted]	-1.0	[redacted]	[redacted]	0.00	36.0	44.0	43.2
		Concrete Fill	2.0	5.0	[redacted]	[redacted]				
		Structural Fill	43.2	-7.0	0.0	36				

[1] Elevations are referenced to NGVD 29 datum

Table 2.5S.4-39Bb Subsurface Conditions for Bearing Capacity Analysis for the STP 3 & 4 Diesel Generator Fuel Oil Storage Vaults (Page 16 of 24)

Average Properties within the Foundation Deformation Zone for Bearing Capacity										
					Shear Strength					
					Layer		Average			
STP	Soil Selection Preference	Soil Layer	Thickness of Layer Below Mat (feet)	Top Elevation [1] (feet)	c(ksf)	Φ(°)	c(ksf)	Φ(°)	Foundation Width B (feet)	Effective Shear Depth, H' (feet)
4 (No. 1)	Assume Failure Along East or West Edge of Mat Design Water Table at el. +17.0 ft Long Term Conditions c' and Φ' for Clays Backfill to el. +34.0 ft	Mat Foundation	[redacted]	-1.0	[redacted]	[redacted]	0.00	36.0	44.0	43.2
		Concrete Fill	2.0	-5.0	[redacted]	[redacted]				
		Structural Fill	43.2	-7.0	0.0	36				

[1] Elevations are referenced to NGVD 29 datum

Table 2.5S.4-39Bb Subsurface Conditions for Bearing Capacity Analysis for the STP 3 & 4 Diesel Generator Fuel Oil Storage Vaults (Page 17 of 24)

Average Properties within the Foundation Deformation Zone for Bearing Capacity										
					Shear Strength					
					Layer		Average			
STP	Soil Selection Preference	Soil Layer	Thickness of Layer Below Mat (feet)	Top Elevation [1] (feet)	c(ksf)	Φ(°)	c(ksf)	Φ(°)	Foundation Width, B (feet)	Effective Shear Depth, H' (feet)
4 (No. 2)	Assume Failure Along East or West Edge of Mat Alternate Water Table at el. -7.0 ft Short Term Conditions c = S_u for Clays Backfill to el. +34.0 ft	Mat Foundation	!	-1.0	!	!	0.00	36.0	44.0	43.2
		Concrete Fill	2.0	-5.0	!	!				
		Structural Fill	43.2	-7.0	0.0	36				

[1] Elevations are referenced to NGVD 29 datum

Table 2.5S.4-39Bb Subsurface Conditions for Bearing Capacity Analysis for the STP 3 & 4 Diesel Generator Fuel Oil Storage Vaults (Page 18 of 24)

Average Properties within the Foundation Deformation Zone for Bearing Capacity										
					Shear Strength					
					Layer		Average			
STP	Soil Selection Preference	Soil Layer	Thickness of Layer Below Mat (feet)	Top Elevation [1] (feet)	c(ksf)	Φ(°)	c(ksf)	Φ(°)	Foundation Width, B (feet)	Effective Shear Depth, H' (feet)
4 (No. 2)	Assume Failure Along East or West Edge of Mat Design Water Table at el. +17.0 ft Short Term Conditions $c = S_u$ for Clays Backfill to el. +34.0 ft	Mat Foundation	[redacted]	-1.0	[redacted]	[redacted]	0.00	36.0	44.0	43.2
		Concrete Fill	2.0	-5.0	[redacted]	[redacted]				
		Structural Fill	43.2	-7.0	0.0	36				

[1] Elevations are referenced to NGVD 29 datum

Table 2.5S.4-39Bb Subsurface Conditions for Bearing Capacity Analysis for the STP 3 & 4 Diesel Generator Fuel Oil Storage Vaults (Page 19 of 24)

Average Properties within the Foundation Deformation Zone for Bearing Capacity										
					Shear Strength					
					Layer		Average			
STP	Soil Selection Preference	Soil Layer	Thickness of Layer Below Mat (feet)	Top Elevation [1] (feet)	c(ksf)	Φ(°)	c(ksf)	Φ(°)	Foundation Width, B (feet)	Effective Shear Depth, H' (feet)
4 (No. 2)	Assume Failure Along East or West Edge of Mat Alternate Water Table at el. -7.0 ft Long Term Conditions c' and Φ' for Clays Backfill to el. +34.0 ft	Mat Foundation	[illegible]	-1.0	[illegible]	[illegible]	0.00	36.0	44.0	43.2
		Concrete Fill	2.0	-5.0	[illegible]	[illegible]				
		Structural Fill	43.2	-7.0	0.0	36				

[1] Elevations are referenced to NGVD 29 datum

Table 2.5S.4-39Bb Subsurface Conditions for Bearing Capacity Analysis for the STP 3 & 4 Diesel Generator Fuel Oil Storage Vaults (Page 20 of 24)

Average Properties within the Foundation Deformation Zone for Bearing Capacity										
					Shear Strength					
					Layer		Average			
STP	Soil Selection Preference	Soil Layer	Thickness of Layer Below Mat (feet)	Top Elevation [1] (feet)	c(ksf)	Φ(°)	c(ksf)	Φ(°)	Foundation Width, B (feet)	Effective Shear Depth, H' (feet)
4 (No. 2)	Assume Failure Along East or West Edge of Mat Design Water Table at el. +17.0 ft Long Term Conditions c' and Φ' for Clays Backfill to el. +34.0 ft	Mat Foundation	[1]	-1.0	[1]	[1]	0.00	36.0	44.0	43.2
		Concrete Fill	2.0	-5.0	[1]	[1]				
		Structural Fill	43.2	-7.0	0.0	36				

[1] Elevations are referenced to NGVD 29 datum

Table 2.5S.4-39Bb Subsurface Conditions for Bearing Capacity Analysis for the STP 3 & 4 Diesel Generator Fuel Oil Storage Vaults (Page 21 of 24)

Average Properties within the Foundation Deformation Zone for Bearing Capacity										
					Shear Strength					
					Layer		Average			
STP	Soil Selection Preference	Soil Layer	Thickness of Layer Below Mat (feet)	Top Elevation [1] (feet)	c(ksf)	Φ(°)	c(ksf)	Φ(°)	Foundation Width, B (feet)	Effective Shear Depth, H' (feet)
4 (No. 3)	Assume Failure Along North or South Edge of Mat Alternate Water Table at el. -7.0 ft Short Term Conditions $c = S_u$ for Clays Backfill to el. +34.0 ft	Mat Foundation	[illegible]	-1.0	[illegible]	[illegible]	0.00	35.6	44.0	42.8
		Concrete Fill	2.0	-5.0	[illegible]	[illegible]				
		Structural Fill	27.0	-7.0	0.0	36				
		E(Sand)	15.8	-34.0	0.0	35				

[1] Elevations are referenced to NGVD 29 datum

Table 2.5S.4-39Bb Subsurface Conditions for Bearing Capacity Analysis for the STP 3 & 4 Diesel Generator Fuel Oil Storage Vaults (Page 22 of 24)

Average Properties within the Foundation Deformation Zone for Bearing Capacity										
					Shear Strength					
					Layer		Average			
STP	Soil Selection Preference	Soil Layer	Thickness of Layer Below Mat (feet)	Top Elevation [1] (feet)	c(ksf)	Φ(°)	c(ksf)	Φ(°)	Foundation Width, B (feet)	Effective Shear Depth, H' (feet)
4 (No. 3)	Assume Failure Along North or South Edge of Mat Design Water Table at el. +17.0 ft Short Term Conditions c = S_u for Clays Backfill to el. +34.0 ft	Mat Foundation	-	-1.0	-	-	0.00	35.6	44.0	42.8
		Concrete Fill	2.0	-5.0	-	-				
		Structural Fill	27.0	-7.0	0.0	36				
		E(Sand)	15.8	-34.0	0.0	35				

[1] Elevations are referenced to NGVD 29 datum

Table 2.5S.4-39Bb Subsurface Conditions for Bearing Capacity Analysis for the STP 3 & 4 Diesel Generator Fuel Oil Storage Vaults (Page 23 of 24)

Average Properties within the Foundation Deformation Zone for Bearing Capacity										
					Shear Strength					
					Layer		Average			
STP	Soil Selection Preference	Soil Layer	Thickness of Layer Below Mat (feet)	Top Elevation [1] (feet)	c(ksf)	Φ(°)	c(ksf)	Φ(°)	Foundation Width, B (feet)	Effective Shear Depth, H' (feet)
4 (No. 3)	Assume Failure Along North or South Edge of Mat Alternate Water Table at el. -7.0 ft Long Term Conditions c' and Φ' for Clays Backfill to el. +34.0 ft	Mat Foundation	-	-1.0	-	-	0.00	35.6	44.0	42.8
		Concrete Fill	2.0	-5.0	-	-				
		Structural Fill	27.0	-7.0	0.0	36				
		E(Sand)	15.8	-34.0	0.0	35				

[1] Elevations are referenced to NGVD 29 datum

Table 2.5S.4-39Bb Subsurface Conditions for Bearing Capacity Analysis for the STP 3 & 4 Diesel Generator Fuel Oil Storage Vaults (Page 24 of 24)

Average Properties within the Foundation Deformation Zone for Bearing Capacity										
					Shear Strength					
					Layer		Average			
STP	Soil Selection Preference	Soil Layer	Thickness of Layer Below Mat (feet)	Top Elevation [1] (feet)	c(ksf)	Φ(°)	c(ksf)	Φ(°)	Foundation Width, B (feet)	Effective Shear Depth, H' (feet)
4 (No. 3)	Assume Failure Along North or South Edge of Mat Design Water Table at el. +17.0 ft Long Term Conditions c' and Φ' for Clays Backfill to el. +34.0 ft	Mat Foundation	-	-1.0	-	-	0.00	35.6	44.0	42.8
		Concrete Fill	2.0	-5.0	-	-				
		Structural Fill	27.0	-7.0	0.0	36				
		E(Sand)	15.8	-34.0	0.0	35				

[1] Elevations are referenced to NGVD 29 datum

Table 2.5S.4-40A was updated with new UHS data and the new methodology.

Table 2.5S.4-40Aa Subsurface Conditions for Settlement Analysis for the STP 3 & 4 UHS Basins (Page 1 of 2)

Soil Properties									
	~~Simplified~~ Average Subsurface Conditions					~~Selection~~ Properties for Settlement Calculation			
	Depth (feet)		Elevation [1] (feet)						
STP	Top	Bottom	Top	Bottom	Stratum	Stratum	Unit Weight, γ (pcf)	Poisson's Ratio μ_d	Elastic Modulus E_{de} (ksf)
[3]	0	10.0	14.0	4.0	Mat Foundation	*	*	*	*
	10.0	14.0	4.0	0.0	Concrete Fill	*	*	*	*
	14.0	32.8	0.0	-18.8	C(Sand)	C(Sand)	122	0.30	1,810
	32.8	53.6	-18.8	-39.6	D(Clay)	D(Clay)	122	0.15	1,865
	53.6	77.9	-39.6	-63.9	E(Sand)	E(Sand)	123	0.30	3,145
	77.9	100.9	-63.9	-86.9	F(Clay)	F(Clay)	125	0.15	1,970
	100.9	138.6	-86.9	-124.6	J(Clay)	J(Clay)	125	0.15	3,175
	138.6	151.1	-124.6	-137.1	J(Sand)	J(Sand)	125	0.30	4,755
	151.1	186.9	-137.1	-172.9	J(Clay)	J(Clay)	125	0.15	3,175
	186.9	207.9	-172.9	-193.9	K(Clay)	K(Clay)	124	0.15	3,335
	207.9	228.9	-193.9	-214.9	K(Sand)	K(Sand)	127	0.30	4,915
	228.9	259.7	-214.9	-245.7	L(Clay)	L(Clay)	124	0.15	2,965
	259.7	269.9	-245.7	-255.9	M(Sand)	M(Sand)	127	0.30	4,350
	269.9	324.0	-255.9	-310.0	N(Clay)	N(Clay)	123	0.15	6,020
	324.0	340.0	-310.0	-326.0	N(Sand)	N(Sand)	128	0.30	11,645
	340.0	345.0	-326.0	-331.0	N(Clay)	N(Clay)	123	0.15	6,020
	345.0	384.0	-331.0	-370.0	N(Sand)	N(Sand)	128	0.30	11,645
	384.0	391.0	-370.0	-377.0	N(Clay)	N(Clay)	123	0.15	6,020
	391.0	408.0	-377.0	-394.0	N(Sand)	N(Sand)	128	0.30	11,645
	408.0	433.0	-394.0	-419.0	N(Clay)	N(Clay)	123	0.15	6,020
	433.0	449.0	-419.0	-435.0	N(Sand)	N(Sand)	128	0.30	11,645
	449.0	584.0	-435.0	-570.0	N(Clay)	N(Clay)	123	0.15	6,020
	584.0	660.0	-570.0	-646.0	Deep Silt/Clay Vs=1585	Silt/Clay	129	0.15	11,190
	660.0	760.0	-646.0	-746.0	Deep Silty Sand Vs=1585	Silty Sand	126	0.30	12,780
	760.0	860.0	-746.0	-846.0	Deep Silt/Clay Vs=1585	Silt/Clay	130	0.15	11,275
	860.0	980.0	-846.0	-966.0	Deep Silty Sand Vs=1585	Silty Sand	130	0.30	13,185
	980.0	1280.0	-966.0	-1266.0	Deep Silty Sand Vs=2350	Silty Sand	130	0.30	28,985
	1280.0	1910.0	-1266.0	-1896.0	Deep Interbedded Vs=2550	Claystone/ Siltstone*	130	0.30	34,130
	1910.0	2480.0	-1896.0	-2466.0	Deep Interbedded Vs=2850	Claystone/ Sand/Silt	135	0.30	44,270

[1] Elevations are referenced to NGVD 29 datum

*/Clay/Sand/Silt

Table 2.5S.4-40~~A~~a Subsurface Conditions for Settlement Analysis for the STP 3 & 4 UHS Basins (Page 2 of 2)

Soil Properties									
	~~Simplified~~ Average Subsurface Conditions					~~Selection~~ Properties for Settlement Calculation			
	Depth (feet)		Elevation [1] (feet)						
STP	Top	Bottom	Top	Bottom	Stratum	Stratum	Unit Weight, γ (pcf)	Poisson's Ratio μ_d	Elastic Modulus E_{de} (ksf)
4	0	10.0	14.0	4.0	Mat Foundation				
	10.0	14.0	4.0	0.0	Concrete Fill				
	14.0	29.0	0.0	-15.0	C(Sand)	C(Sand)	122	0.30	1,810
	29.0	48.3	-15.0	-34.3	D(Clay)	D(Clay)	122	0.15	1,865
	48.3	65.7	-34.3	-51.7	E(Sand)	E(Sand)	123	0.30	3,145
	65.7	103.8	-51.7	-89.8	F(Clay)	F(Clay)	125	0.15	1,970
	103.8	124.4	-89.8	-110.4	J(Clay)	J(Clay)	125	0.15	3,175
	124.4	146.0	-110.4	-132.0	J(Sand)	J(Sand)	125	0.30	4,755
	146.0	203.8	-132.0	-189.8	J(Clay)	J(Clay)	125	0.15	3,175
	203.8	247.8	-189.8	-233.8	K(Clay)	K(Clay)	124	0.15	3,335
	247.8	270.9	-233.8	-256.9	L(Clay)	L(Clay)	124	0.15	2,965
	270.9	280.8	-256.9	-266.8	M(Sand)	M(Sand)	127	0.30	4,350
	280.8	318.0	-266.8	-304.0	N(Clay)	N(Clay)	123	0.15	6,020
	318.0	336.0	-304.0	-322.0	N(Sand)	N(Sand)	128	0.30	11,645
	336.0	347.0	-322.0	-333.0	N(Clay)	N(Clay)	123	0.15	6,020
	347.0	373.0	-333.0	-359.0	N(Sand)	N(Sand)	128	0.30	11,645
	373.0	383.0	-359.0	-369.0	N(Clay)	N(Clay)	123	0.15	6,020
	383.0	403.0	-369.0	-389.0	N(Sand)	N(Sand)	128	0.30	11,645
	403.0	488.0	-389.0	-474.0	N(Clay)	N(Clay)	123	0.15	6,020
	488.0	523.0	-474.0	-509.0	N(Sand)	N(Sand)	128	0.30	11,645
	523.0	584.0	-509.0	-570.0	N(Clay)	N(Clay)	123	0.15	6,020
	584.0	660.0	-570.0	-646.0	Deep Silt/Clay Vs=1585	Silt/Clay	129	0.15	11,190
	660.0	760.0	-646.0	-746.0	Deep Silty Sand Vs=1585	Silty Sand	126	0.30	12,780
	760.0	860.0	-746.0	-846.0	Deep Silt/Clay Vs=1585	Silt/Clay	130	0.15	11,275
	860.0	980.0	-846.0	-966.0	Deep Silty Sand Vs=1585	Silty Sand	130	0.30	13,185
	980.0	1280.0	-966.0	-1266.0	Deep Silty Sand Vs=2350	Silty Sand	130	0.30	28,985
	1280.0	1910.0	-1266.0	-1896.0	Deep Interbedded Vs=2550	Claystone/ Siltstone*	130	0.30	34,130
	1910.0	2480.0	-1896.0	-2466.0	Deep Interbedded Vs=2850	Claystone/ Sand/Silt	135	0.30	44,270

[1] Elevations are referenced to NGVD 29 datum

*/Clay/Sand/Silt

Table 2.5S.4-40B was updated with new UHS data and new methodology.

Table 2.5S.4-40Bb Subsurface Conditions for Bearing Capacity Analysis for the STP 3 & 4 UHS Basins (Page 1 of 8)

Average Properties within the Foundation Deformation Zone for Bearing Capacity										
					Shear Strength					
					Layer		Average			
STP	Soil Selection Preference	Soil Layer	Thickness of Layer Below Mat (feet)	Top Elevation [1] (feet)	c(ksf)	Φ(°)	c(ksf)	Φ(°)	Foundation Width, B (feet)	Effective Shear Depth, H' (feet)
3	Assume Failure Along South Edge of Mat Alternate Water Table at el. +0.0 ft Short Term Conditions c= S_u for Clays Backfill to el. +34.0 ft	Mat Foundation	[illegible]	14.0	[illegible]	[illegible]	1.17	24.1	164.0	126.5
		Concrete Fill	4.0	4.0	[illegible]	[illegible]				
		C(Sand)	18.8	0.0	0.0	35				
		D(Clay)	20.8	-18.8	3.0	0				
		E(Sand)	24.3	-39.6	0.0	35				
		F(Clay)	23.0	-63.9	3.4	0				
		H(Sand)	37.7	-86.9	0.0	35				
		J(Clay)	1.9	-124.6	3.8	0				

[1] Elevations are referenced to NGVD 29 datum

Table 2.5S.4-40Bb Subsurface Conditions for Bearing Capacity Analysis for the STP 3 & 4 UHS Basins (Page 2 of 8)

Average Properties within the Foundation Deformation Zone for Bearing Capacity										
					Shear Strength					
					Layer		Average			
STP	Soil Selection Preference	Soil Layer	Thickness of Layer Below Mat (feet)	Top Elevation [1] (feet)	c(ksf)	Φ(°)	c(ksf)	Φ(°)	Foundation Width, B (feet)	Effective Shear Depth, H' (feet)
3	Assume Failure Along South Edge of Mat Design Water Table at el. +17.0 ft Short Term Conditions c = S_u for Clays Backfill to el. +34.0 ft	Mat Foundation	!	14.0	!	!	1.17	24.1	164.0	126.5
		Concrete Fill	4.0	4.0	!	!				
		C(Sand)	18.8	0.0	0.0	35				
		D(Clay)	20.8	-18.8	3.0	0				
		E(Sand)	24.3	-39.6	0.0	35				
		F(Clay)	23.0	-63.9	3.4	0				
		H(Sand)	37.7	-86.9	0.0	35				
		J(Clay)	1.9	-124.6	3.8	0				

[1] Elevations are referenced to NGVD 29 datum

Table 2.5S.4-40~~B~~b Subsurface Conditions for Bearing Capacity Analysis for the STP 3 & 4 UHS Basins (Page 3 of 8)

Average Properties within the Foundation Deformation Zone for Bearing Capacity										
					Shear Strength					
					Layer		Average			
STP	Soil Selection Preference	Soil Layer	Thickness of Layer Below Mat (feet)	Top Elevation [1] (feet)	c(ksf)	Φ(°)	c(ksf)	Φ(°)	Foundation Width, B (feet)	Effective Shear Depth, H' (feet)
3	Assume Failure Along South Edge of Mat Alternate Water Table at el. +0.0 ft Long Term Conditions c' and Φ' for Clays Backfill to el. +34.0 ft	Mat Foundation	-	14.0	-	-	0.68	26.8	164.0	133.4
		Concrete Fill	4.0	4.0	-	-				
		C(Sand)	18.8	0.0	0.0	35				
		D(Clay)	20.8	-18.8	1.2	16				
		E(Sand)	24.3	-39.6	0.0	35				
		F(Clay)	23.0	-63.9	2.0	8				
		H(Sand)	37.7	-86.9	0.0	35				
		J(Clay)	8.8	-124.6	2.3	11				

[1] Elevations are referenced to NGVD 29 datum

Table 2.5S.4-40Bb Subsurface Conditions for Bearing Capacity Analysis for the STP 3 & 4 UHS Basins (Page 4 of 8)

Average Properties within the Foundation Deformation Zone for Bearing Capacity										
					Shear Strength					
					Layer		Average			
STP	Soil Selection Preference	Soil Layer	Thickness of Layer Below Mat (feet)	Top Elevation [1] (feet)	c(ksf)	Φ(°)	c(ksf)	Φ(°)	Foundation Width, B (feet)	Effective Shear Depth, H' (feet)
3	Assume Failure Along South Edge of Mat Design Water Table at el. +17.0 ft Long Term Conditions c' and Φ' for Clays Backfill to el. +34.0 ft	Mat Foundation	!	14.0	!	!	0.68	26.8	164.0	133.4
		Concrete Fill	4.0	4.0	!	!				
		C(Sand)	18.8	0.0	0.0	35				
		D(Clay)	20.8	-18.8	1.2	16				
		E(Sand)	24.3	-39.6	0.0	35				
		F(Clay)	23.0	-63.9	2.0	8				
		H(Sand)	37.7	-86.9	0.0	35				
		J(Clay)	8.8	-124.6	2.3	11				

[1] Elevations are referenced to NGVD 29 datum

Table 2.5S.4-40Bb Subsurface Conditions for Bearing Capacity Analysis for the STP 3 & 4 UHS Basins (Page 5 of 8)

Average Properties within the Foundation Deformation Zone for Bearing Capacity										
STP	Soil Selection Preference	Soil Layer	Thickness of Layer Below Mat (feet)	Top Elevation [1] (feet)	Shear Strength Layer c(ksf)	Shear Strength Layer Φ(°)	Shear Strength Average c(ksf)	Shear Strength Average Φ(°)	Foundation Width, B (feet)	Effective Shear Depth, H' (feet)
4	Assume Failure Along South Edge of Mat Alternate Water Table at el. +0.0 ft Short Term Conditions c = S_u for Clays Backfill to el. +34.0 ft	Mat Foundation	[redacted]	14.0	[redacted]	[redacted]	2.30	12.5	164.0	102.2
		Concrete Fill	4.0	4.0	[redacted]	[redacted]				
		C(Sand)	15.0	0	0.0	35				
		D(Clay)	19.3	-15.0	3.0	0				
		E(Sand)	17.4	-34.3	0.0	35				
		F(Clay)	38.1	-51.7	3.4	0				
		J(Clay)	12.4	-89.8	3.8	0				

[1] Elevations are referenced to NGVD 29 datum

Table 2.5S.4-40Bb Subsurface Conditions for Bearing Capacity Analysis for the STP 3 & 4 UHS Basins (Page 6 of 8)

Average Properties within the Foundation Deformation Zone for Bearing Capacity										
					Shear Strength					
					Layer		Average			
STP	Soil Selection Preference	Soil Layer	Thickness of Layer Below Mat (feet)	Top Elevation [1] (feet)	c(ksf)	Φ(°)	c(ksf)	Φ(°)	Foundation Width, B (feet)	Effective Shear Depth, H' (feet)
4	Assume Failure Along South Edge of Mat Design Water Table at el +17.0 ft Short Term Conditions c = S_u for Clays Backfill to el +34.0 ft	Mat Foundation	[illegible]	14.0	[illegible]	[illegible]	2.30	12.5	164.0	102.2
		Concrete Fill	4.0	4.0	[illegible]	[illegible]				
		C(Sand)	15.0	0.0	0.0	35				
		D(Clay)	19.3	-15.0	3.0	0				
		E(Sand)	17.4	-34.3	0.0	35				
		F(Clay)	38.1	-51.7	3.4	0				
		J(Clay)	12.4	-89.8	3.8	0				

[1] Elevations are referenced to NGVD 29 datum

Table 2.5S.4-40~~B~~b Subsurface Conditions for Bearing Capacity Analysis for the STP 3 & 4 UHS Basins (Page 7 of 8)

Average Properties within the Foundation Deformation Zone for Bearing Capacity										
					Shear Strength					
					Layer		Average			
STP	Soil Selection Preference	Soil Layer	Thickness of Layer Below Mat (feet)	Top Elevation [1] (feet)	c(ksf)	Φ(°)	c(ksf)	Φ(°)	Foundation Width, B (feet)	Effective Shear Depth, H' (feet)
4	Assume Failure Along South Edge of Mat Alternate Water Table at el. +0.0 ft Long Term Conditions c' and Φ' for Clays Backfill to el +34.0 ft	Mat Foundation	!	14.0	!	!	1.26	19.6	164.0	116.2
		Concrete Fill	4.0	4.0	!	!				
		C(Sand)	15.0	0.0	0.0	35				
		D(Clay)	19.3	-15.0	1.2	16				
		E(Sand)	17.4	-34.3	0.0	35				
		F(Clay)	38.1	-51.7	2.0	8				
		J(Clay)	20.6	-89.8	2.3	11				
		J(Sand)	5.8	-110.4	0.0	33				

[1] Elevations are referenced to NGVD 29 datum

Table 2.5S.4-40Bb Subsurface Conditions for Bearing Capacity Analysis for the STP 3 & 4 UHS Basins (Page 8 of 8)

Average Properties within the Foundation Deformation Zone for Bearing Capacity										
STP	Soil Selection Preference	Soil Layer	Thickness of Layer Below Mat (feet)	Top Elevation [1] (feet)	Shear Strength Layer c(ksf)	Shear Strength Layer Φ(°)	Shear Strength Average c(ksf)	Shear Strength Average Φ(°)	Foundation Width, B (feet)	Effective Shear Depth, H' (feet)
4	Assume Failure Along South Edge of Mat Design Water Table at el. +17.0 ft Long Term Conditions c' and Φ' for Clays Backfill to el. +34.0 ft	Mat Foundation	[illegible]	14.0	[illegible]	[illegible]	1.26	19.6	164.0	116.2
		Concrete Fill	4.0	4.0	[illegible]	[illegible]				
		C(Sand)	15.0	0.0	0.0	35				
		D(Clay)	19.3	-15.0	1.2	16				
		E(Sand)	17.4	-34.3	0.0	35				
		F(Clay)	38.1	-51.7	2.0	8				
		J(Clay)	20.6	-89.8	2.3	11				
		J(Sand)	5.8	-110.4	0.0	33				

[1] Elevations are referenced to NGVD 29 datum

This is a new table to include the data for the RSW Tunnels using the new methodology.

Table 2.5S.4-40C Subsurface Conditions for Settlement Analysis for the STP 3 & 4 RSW Tunnels (Page 1 of 6)

Soil Properties									
	Average Subsurface Conditions					Properties for Settlement Calculation			
	Depth (feet)		Elevation [1] (feet)				Unit Weight, γ (pcf)	Poisson's Ratio μ_d	Elastic Modulus E_d (ksf)
STP	Top	Bottom	Top	Bottom	Stratum	Stratum			
3 (South Area)	0	3.0	18.0	21.0	Mat Foundation	Mat Foundation	[illegible]	[illegible]	[illegible]
	3.0	5.0	21.0	23.0	Concrete Fill	Concrete Fill	[illegible]	[illegible]	[illegible]
	5.0	16.0	23.0	34.0	Structural Fill	Structural Fill	134	0.30	3,000
	16.0	16.6	34.0	34.6	D(Clay)	D(Clay)	122	0.15	1,865
	16.6	36.6	34.6	54.6	E(Sand)	E(Sand)	123	0.30	3,145
	36.6	61.6	54.6	79.6	F(Clay)	F(Clay)	125	0.15	1,970
	61.6	131.6	79.6	149.6	J(Clay)	J(Clay)	125	0.15	3,175
	131.6	141.6	149.6	159.6	J(Sand)	J(Sand)	125	0.30	4,755
	141.6	151.6	159.6	169.6	J(Clay)	J(Clay)	125	0.15	3,175
	151.6	180.0	169.6	198.0	K(Clay)	K(Clay)	124	0.15	3,335
	180.0	211.0	198.0	229.0	K(Sand)	K(Sand)	127	0.30	4,915
	211.0	216.0	229.0	234.0	L(Clay)	L(Clay)	124	0.15	2,965
	216.0	230.5	234.0	248.5	M(Sand)	M(Sand)	127	0.30	4,350
	230.5	292.0	248.5	310.0	N(Clay)	N(Clay)	123	0.15	6,020
	292.0	308.0	310.0	326.0	N(Sand)	N(Sand)	128	0.30	11,645
	308.0	313.0	326.0	331.0	N(Clay)	N(Clay)	123	0.15	6,020
	313.0	352.0	331.0	370.0	N(Sand)	N(Sand)	128	0.30	11,645
	352.0	359.0	370.0	377.0	N(Clay)	N(Clay)	123	0.15	6,020
	359.0	376.0	377.0	394.0	N(Sand)	N(Sand)	128	0.30	11,645
	376.0	401.0	394.0	419.0	N(Clay)	N(Clay)	123	0.15	6,020
	401.0	417.0	419.0	435.0	N(Sand)	N(Sand)	128	0.30	11,645
	417.0	552.0	435.0	570.0	N(Clay)	N(Clay)	123	0.15	6,020
	552.0	628.0	570.0	646.0	Deep Silt/Clay Vs=1585	Silt/Clay	129	0.15	11,190
	628.0	728.0	646.0	746.0	Deep Silty Sand Vs=1585	Silty Sand	126	0.30	12,780
	728.0	828.0	746.0	846.0	Deep Silt/Clay Vs=1585	Silt/Clay	130	0.15	11,275
	828.0	948.0	846.0	966.0	Deep Silty Sand Vs=1585	Silty Sand	130	0.30	13,185
	948.0	1248.0	966.0	1266.0	Deep Silty Sand Vs=2350	Silty Sand	130	0.30	28,985
	1248.0	1878.0	1266.0	1896.0	Deep Interbedded Vs=2550	Claystone/ Siltstone*	130	0.30	34,130
	1878.0	2448.0	1896.0	2466.0	Deep Interbedded Vs=2850	Claystone/ Sand/Silt	135	0.30	44,270

[1] Elevations are referenced to NGVD 29 datum

*/Clay/Sand/Silt

Table 2.5S.4-40C Subsurface Conditions for Settlement Analysis for the STP 3 & 4 RSW Tunnels (Page 2 of 6)

Soil Properties									
	Average Subsurface Conditions					Properties for Settlement Calculation			
	Depth (feet)		Elevation [1] (feet)				Unit Weight,	Poisson's	Elastic Modulus E_d
STP	Top	Bottom	Top	Bottom	Stratum	Stratum	γ (pcf)	Ratio μ_d	(ksf)
	0	3.0	18.0	21.0	Mat Foundation	Mat Foundation	[illegible]	[illegible]	[illegible]
	3.0	5.0	21.0	23.0	Concrete Fill	Concrete Fill	[illegible]	[illegible]	[illegible]
	5.0	42.3	23.0	60.3	Structural Fill	Structural Fill	134	0.30	3,000
	42.3	56.4	60.3	74.4	F(Clay)	F(Clay)	125	0.15	1,970
	56.4	66.4	74.4	84.4	H(Sand)	H(Sand)	125	0.30	3,240
	66.4	121.4	84.4	139.4	J(Clay)	J(Clay)	125	0.15	3,175
	121.4	141.4	139.4	159.4	J(Sand)	J(Sand)	125	0.30	4,755
	141.4	151.4	159.4	169.4	J(Clay)	J(Clay)	125	0.15	3,175
	151.4	161.4	169.4	179.4	J(Sand)	J(Sand)	125	0.30	4,755
	161.4	180.0	179.4	198.0	K(Clay)	K(Clay)	124	0.15	3,335
	180.0	211.0	198.0	229.0	K(Sand)	K(Sand)	127	0.30	4,915
	211.0	216.0	229.0	234.0	L(Clay)	L(Clay)	124	0.15	2,965
	216.0	230.5	234.0	248.5	M(Sand)	M(Sand)	127	0.30	4,350
	230.5	292.0	248.5	310.0	N(Clay)	N(Clay)	123	0.15	6,020
	292.0	308.0	310.0	326.0	N(Sand)	N(Sand)	128	0.30	11,645
	308.0	313.0	326.0	331.0	N(Clay)	N(Clay)	123	0.15	6,020
3 (Center Area)	313.0	352.0	331.0	370.0	N(Sand)	N(Sand)	128	0.30	11,645
	352.0	359.0	370.0	377.0	N(Clay)	N(Clay)	123	0.15	6,020
	359.0	376.0	377.0	394.0	N(Sand)	N(Sand)	128	0.30	11,645
	376.0	401.0	394.0	419.0	N(Clay)	N(Clay)	123	0.15	6,020
	401.0	417.0	419.0	435.0	N(Sand)	N(Sand)	128	0.30	11,645
	417.0	552.0	435.0	570.0	N(Clay)	N(Clay)	123	0.15	6,020
	552.0	628.0	570.0	646.0	Deep Silt/Clay Vs=1585	Silt/Clay	129	0.15	11,190
	628.0	728.0	646.0	746.0	Deep Silty Sand Vs=1585	Silty Sand	126	0.30	12,780
	728.0	828.0	746.0	846.0	Deep Silt/Clay Vs=1585	Silt/Clay	130	0.15	11,275
	828.0	948.0	846.0	966.0	Deep Silty Sand Vs=1585	Silty Sand	130	0.30	13,185
	948.0	1248.0	966.0	1266.0	Deep Silty Sand Vs=2350	Silty Sand	130	0.30	28,985
	1248.0	1878.0	1266.0	1896.0	Deep Interbedded Vs=2550	Claystone/ Siltstone*	130	0.30	34,130
	1878.0	2448.0	1896.0	2466.0	Deep Interbedded Vs=2850	Claystone/ Sand/Silt	135	0.30	44,270

[1] Elevations are referenced to NGVD 29 datum

*/Clay/Sand/Silt

Table 2.5S.4-40C Subsurface Conditions for Settlement Analysis for the STP 3 & 4 RSW Tunnels (Page 3 of 6)

Soil Properties									
	Average Subsurface Conditions					Properties for Settlement Calculation			
	Depth (feet)		Elevation [1] (feet)						
STP	Top	Bottom	Top	Bottom	Stratum	Stratum	Unit Weight, γ (pcf)	Poisson's Ratio μ_d	Elastic Modulus E_d (ksf)
	0	3.0	18.0	21.0	Mat Foundation	Mat Foundation	[illegible]	[illegible]	[illegible]
	3.0	5.0	21.0	23.0	Concrete Fill	Concrete Fill	[illegible]	[illegible]	[illegible]
	5.0	21.0	23.0	39.0	Structural Fill	Structural Fill	134	0.30	3,000
	21.0	23.9	39.0	41.9	D(Clay)	D(Clay)	122	0.15	1,865
	23.9	38.9	41.9	56.9	E(Sand)	E(Sand)	123	0.30	3,145
	38.9	56.4	56.9	74.4	F(Clay)	F(Clay)	125	0.15	1,970
	56.4	66.4	74.4	84.4	H(Sand)	H(Sand)	125	0.30	3,240
	66.4	121.4	84.4	139.4	J(Clay)	J(Clay)	125	0.15	3,175
	121.4	141.4	139.4	159.4	J(Sand)	J(Sand)	125	0.30	4,755
	141.4	151.4	159.4	169.4	J(Clay)	J(Clay)	125	0.15	3,175
	151.4	161.4	169.4	179.4	J(Sand)	J(Sand)	125	0.30	4,755
	161.4	180.0	179.4	198.0	K(Clay)	K(Clay)	124	0.15	3,335
	180.0	211.0	198.0	229.0	K(Sand)	K(Sand)	127	0.30	4,915
	211.0	216.0	229.0	234.0	L(Clay)	L(Clay)	124	0.15	2,965
	216.0	230.5	234.0	248.5	M(Sand)	M(Sand)	127	0.30	4,350
	230.5	292.0	248.5	310.0	N(Clay)	N(Clay)	123	0.15	6,020
	292.0	308.0	310.0	326.0	N(Sand)	N(Sand)	128	0.30	11,645
3 (North Area)	308.0	313.0	326.0	331.0	N(Clay)	N(Clay)	123	0.15	6,020
	313.0	352.0	331.0	370.0	N(Sand)	N(Sand)	128	0.30	11,645
	352.0	359.0	370.0	377.0	N(Clay)	N(Clay)	123	0.15	6,020
	359.0	376.0	377.0	394.0	N(Sand)	N(Sand)	128	0.30	11,645
	376.0	401.0	394.0	419.0	N(Clay)	N(Clay)	123	0.15	6,020
	401.0	417.0	419.0	435.0	N(Sand)	N(Sand)	128	0.30	11,645
	417.0	552.0	435.0	570.0	N(Clay)	N(Clay)	123	0.15	6,020
	552.0	628.0	570.0	646.0	Deep Silt/Clay Vs=1585	Silt/Clay	129	0.15	11,190
	628.0	728.0	646.0	746.0	Deep Silty Sand Vs=1585	Silty Sand	126	0.30	12,780
	728.0	828.0	746.0	846.0	Deep Silt/Clay Vs=1585	Silt/Clay	130	0.15	11,275
	828.0	948.0	846.0	966.0	Deep Silty Sand Vs=1585	Silty Sand	130	0.30	13,185
	948.0	1248.0	966.0	1266.0	Deep Silty Sand Vs=2350	Silty Sand	130	0.30	28,985
	1248.0	1878.0	1266.0	1896.0	Deep Interbedded Vs=2550	Claystone/ Siltstone*	130	0.30	34,130
	1878.0	2448.0	1896.0	2466.0	Deep Interbedded Vs=2850	Claystone/ Sand/Silt	135	0.30	44,270

[1] Elevations are referenced to NGVD 29 datum

*/Clay/Sand/Silt

Table 2.5S.4-40C Subsurface Conditions for Settlement Analysis for the STP 3 & 4 RSW Tunnels (Page 4 of 6)

Soil Properties									
	Average Subsurface Conditions					Properties for Settlement Calculation			
	Depth (feet)		Elevation [1] (feet)				Unit Weight,	Poisson's	Elastic Modulus E_d
STP	Top	Bottom	Top	Bottom	Stratum	Stratum	γ (pcf)	Ratio μ_d	(ksf)
4 (South Area)	0	3.0	18.0	21.0	Mat Foundation	Mat Foundation	[illegible]	[illegible]	[illegible]
	3.0	5.0	21.0	23.0	Concrete Fill	Concrete Fill	[illegible]	[illegible]	[illegible]
	5.0	16.0	23.0	34.0	Structural Fill	Structural Fill	134	0.30	3,000
	16.0	36.6	34.0	54.6	E(Sand)	E(Sand)	123	0.30	3,145
	36.6	61.5	54.6	79.5	E(Clay)	E(Clay)	125	0.15	1,970
	61.5	96.6	79.5	114.6	J(Clay)	J(Clay)	125	0.15	3,175
	96.6	112.2	114.6	130.2	J(Sand)	J(Sand)	125	0.30	4,755
	112.2	121.8	130.2	139.8	J(Clay)	J(Clay)	125	0.15	3,175
	121.8	134.7	139.8	152.7	J(Sand)	J(Sand)	125	0.30	4,755
	134.7	153.9	152.7	171.9	J(Clay)	J(Clay)	125	0.15	3,175
	153.9	193.9	171.9	211.9	K(Clay)	K(Clay)	124	0.15	3,335
	193.9	210.0	211.9	228.0	K(Sand)	K(Sand)	127	0.30	4,915
	210.0	215.0	228.0	233.0	L(Clay)	L(Clay)	124	0.15	2,965
	215.0	230.0	233.0	248.0	M(Sand)	M(Sand)	127	0.30	4,350
	230.0	286.0	248.0	304.0	N(Clay)	N(Clay)	123	0.15	6,020
	286.0	304.0	304.0	322.0	N(Sand)	N(Sand)	128	0.30	11,645
	304.0	315.0	322.0	333.0	N(Clay)	N(Clay)	123	0.15	6,020
	315.0	341.0	333.0	359.0	N(Sand)	N(Sand)	128	0.30	11,645
	341.0	351.0	359.0	369.0	N(Clay)	N(Clay)	123	0.15	6,020
	351.0	371.0	369.0	389.0	N(Sand)	N(Sand)	128	0.30	11,645
	371.0	456.0	389.0	474.0	N(Clay)	N(Clay)	123	0.15	6,020
	456.0	491.0	474.0	509.0	N(Sand)	N(Sand)	128	0.30	11,645
	491.0	552.0	509.0	570.0	N(Clay)	N(Clay)	123	0.15	6,020
	552.0	628.0	570.0	646.0	Deep Silt/Clay Vs=1585	Silt/Clay	129	0.15	11,190
	628.0	728.0	646.0	746.0	Deep Silty Sand Vs=1585	Silty Sand	126	0.30	12,780
	728.0	828.0	746.0	846.0	Deep Silt/Clay Vs=1585	Silt/Clay	130	0.15	11,275
	828.0	948.0	846.0	966.0	Deep Silty Sand Vs=1585	Silty Sand	130	0.30	13,185
	948.0	1248.0	966.0	1266.0	Deep Silty Sand Vs=2350	Silty Sand	130	0.30	28,985
	1248.0	1878.0	1266.0	1896.0	Deep Interbedded Vs=2550	Claystone/ Siltstone*	130	0.30	34,130
	1878.0	2448.0	1896.0	2466.0	Deep Interbedded Vs=2850	Claystone/ Sand/Silt	135	0.30	44,270

[1] Elevations are referenced to NGVD 29 datum

*/Clay/Sand/Silt

Table 2.5S.4-40C Subsurface Conditions for Settlement Analysis for the STP 3 & 4 RSW Tunnels (Page 5 of 6)

Soil Properties									
	Average Subsurface Conditions					Properties for Settlement Calculation			
	Depth (feet)		Elevation [1] (feet)				Unit Weight, γ (pcf)	Poisson's Ratio μ_d	Elastic Modulus E_d (ksf)
STP	Top	Bottom	Top	Bottom	Stratum	Stratum			
	0	3.0	18.0	21.0	Mat Foundation	Mat Foundation	*	*	*
	3.0	5.0	21.0	23.0	Concrete Fill	Concrete Fill	*	*	*
	5.0	42.3	23.0	60.3	Structural Fill	Structural Fill	134	0.30	3,000
	42.3	59.2	60.3	77.2	F(Clay)	F(Clay)	125	0.15	1,970
	59.2	62.2	77.2	80.2	H(Sand)	H(Sand)	125	0.30	3,240
	62.2	91.7	80.2	109.7	J(Clay)	J(Clay)	125	0.15	3,175
	91.7	109.2	109.7	127.2	J(Sand)	J(Sand)	125	0.30	4,755
	109.2	149.2	127.2	167.2	J(Clay)	J(Clay)	125	0.15	3,175
	149.2	189.0	167.2	207.0	K(Clay)	K(Clay)	124	0.15	3,335
	189.0	210.0	207.0	228.0	K(Sand)	K(Sand)	127	0.30	4,915
	210.0	215.0	228.0	233.0	L(Clay)	L(Clay)	124	0.15	2,965
	215.0	230.0	233.0	248.0	M(Sand)	M(Sand)	127	0.30	4,350
	230.0	286.0	248.0	304.0	N(Clay)	N(Clay)	123	0.15	6,020
	286.0	304.0	304.0	322.0	N(Sand)	N(Sand)	128	0.30	11,645
	304.0	315.0	322.0	333.0	N(Clay)	N(Clay)	123	0.15	6,020
4 (Center Area)	315.0	341.0	333.0	359.0	N(Sand)	N(Sand)	128	0.30	11,645
	341.0	351.0	359.0	369.0	N(Clay)	N(Clay)	123	0.15	6,020
	351.0	371.0	369.0	389.0	N(Sand)	N(Sand)	128	0.30	11,645
	371.0	456.0	389.0	474.0	N(Clay)	N(Clay)	123	0.15	6,020
	456.0	491.0	474.0	509.0	N(Sand)	N(Sand)	128	0.30	11,645
	491.0	552.0	509.0	570.0	N(Clay)	N(Clay)	123	0.15	6,020
	552.0	628.0	570.0	646.0	Deep Silt/Clay Vs=1585	Silt/Clay	129	0.15	11,190
	628.0	728.0	646.0	746.0	Deep Silty Sand Vs=1585	Silty Sand	126	0.30	12,780
	728.0	828.0	746.0	846.0	Deep Silt/Clay Vs=1585	Silt/Clay	130	0.15	11,275
	828.0	948.0	846.0	966.0	Deep Silty Sand Vs=1585	Silty Sand	130	0.30	13,185
	948.0	1248.0	966.0	1266.0	Deep Silty Sand Vs=2350	Silty Sand	130	0.30	28,985
	1248.0	1878.0	1266.0	1896.0	Deep Interbedded Vs=2550	Claystone/ Siltstone	130	0.30	34,130
	1878.0	2448.0	1896.0	2466.0	Deep Interbedded Vs=2850	Claystone/ Sand/Silt	135	0.30	44,270

[1] Elevations are referenced to NGVD 29 datum

*/Clay/Sand/Silt

Table 2.5S.4-40C Subsurface Conditions for Settlement Analysis for the STP 3 & 4 RSW Tunnels (Page 6 of 6)

Soil Properties									
	Average Subsurface Conditions					Properties for Settlement Calculation			
	Depth (feet)		Elevation [1] (feet)				Unit Weight, γ (pcf)	Poisson's Ratio μ_d	Elastic Modulus E_d (ksf)
STP	Top	Bottom	Top	Bottom	Stratum	Stratum			
4 (North Area)	0	3.0	18.0	21.0	Mat Foundation	Mat Foundation	[illegible]	[illegible]	[illegible]
	3.0	5.0	21.0	23.0	Concrete Fill	Concrete Fill	[illegible]	[illegible]	[illegible]
	5.0	21.0	23.0	39.0	Structural Fill	Structural Fill	134	0.30	3,000
	21.0	31.7	39.0	49.7	E(Sand)	E(Sand)	123	0.30	3,145
	31.7	59.2	49.7	77.2	F(Clay)	F(Clay)	125	0.15	1,970
	59.2	62.2	77.2	80.2	H(Sand)	H(Sand)	125	0.30	3,240
	62.2	91.7	80.2	109.7	J(Clay)	J(Clay)	125	0.15	3,175
	91.7	109.2	109.7	127.2	J(Sand)	J(Sand)	125	0.30	4,755
	109.2	149.2	127.2	167.2	J(Clay)	J(Clay)	125	0.15	3,175
	149.2	189.0	167.2	207.0	K(Clay)	K(Clay)	124	0.15	3,335
	189.0	210.0	207.0	228.0	K(Sand)	K(Sand)	127	0.30	4,915
	210.0	215.0	228.0	233.0	L(Clay)	L(Clay)	124	0.15	2,965
	215.0	230.0	233.0	248.0	M(Sand)	M(Sand)	127	0.30	4,350
	230.0	286.0	248.0	304.0	N(Clay)	N(Clay)	123	0.15	6,020
	286.0	304.0	304.0	322.0	N(Sand)	N(Sand)	128	0.30	11,645
	304.0	315.0	322.0	333.0	N(Clay)	N(Clay)	123	0.15	6,020
	315.0	341.0	333.0	359.0	N(Sand)	N(Sand)	128	0.30	11,645
	341.0	351.0	359.0	369.0	N(Clay)	N(Clay)	123	0.15	6,020
	351.0	371.0	369.0	389.0	N(Sand)	N(Sand)	128	0.30	11,645
	371.0	456.0	389.0	474.0	N(Clay)	N(Clay)	123	0.15	6,020
	456.0	491.0	474.0	509.0	N(Sand)	N(Sand)	128	0.30	11,645
	491.0	552.0	509.0	570.0	N(Clay)	N(Clay)	123	0.15	6,020
	552.0	628.0	570.0	646.0	Deep Silt/Clay Vs=1585	Silt/Clay	129	0.15	11,190
	628.0	728.0	646.0	746.0	Deep Silty Sand Vs=1585	Silty Sand	126	0.30	12,780
	728.0	828.0	746.0	846.0	Deep Silt/Clay Vs=1585	Silt/Clay	130	0.15	11,275
	828.0	948.0	846.0	966.0	Deep Silty Sand Vs=1585	Silty Sand	130	0.30	13,185
	948.0	1248.0	966.0	1266.0	Deep Silty Sand Vs=2350	Silty Sand	130	0.30	28,985
	1248.0	1878.0	1266.0	1896.0	Deep Interbedded Vs=2550	Claystone/ Siltstone*	130	0.30	34,130
	1878.0	2448.0	1896.0	2466.0	Deep Interbedded Vs=2850	Claystone/ Sand/Silt	135	0.30	44,270

[1] Elevations are referenced to NGVD 29 datum

*/Clay/Sand/Silt

This is a new table to include the new data for the RSW Tunnels using the new methodology.

Table 2.5S.4-40D Subsurface Conditions for Bearing Capacity Analysis for the STP 3 & 4 RSW Tunnels (Page 1 of 8)

Average Properties within the Foundation Deformation Zone for Bearing Capacity										
					Shear Strength					
					Layer		Average			
STP	Soil Selection Preference	Soil Layer	Thickness of Layer Below Mat (feet)	Top Elevation [1] (feet)	c(ksf)	Φ(°)	c(ksf)	Φ(°)	Foundation Width, B (feet)	Effective Shear Depth, H' (feet)
3	Assume Failure Along West or East Edge of Mat Alternate Water Table at el. -23.0 ft Short Term Conditions c= S_u for Clays Backfill to el. +34.0 ft	Mat Foundation	-	-18.0	-	-	0.00	36.0	17.0	16.7
		Concrete Fill	2.0	-21.0	-	-				
		Structural Fill	16.7	-23.0	0	36				

[1] Elevations are referenced to NGVD 29 datum

Table 2.5S.4-40D Subsurface Conditions for Bearing Capacity Analysis for the STP 3 & 4 RSW Tunnels (Page 2 of 8)

Average Properties within the Foundation Deformation Zone for Bearing Capacity										
					Shear Strength					
					Layer		Average			
STP	Soil Selection Preference	Soil Layer	Thickness of Layer Below Mat (feet)	Top Elevation [1] (feet)	c(ksf)	Φ(°)	c(ksf)	Φ(°)	Foundation Width, B (feet)	Effective Shear Depth, H (feet)
3	Assume Failure Along West or East Edge of Mat Design Water Table at el +17.0 ft Short Term Conditions c= S_u for Clays Backfill to el +34.0 ft	Mat Foundation	[redacted]	-18.0	[redacted]	[redacted]	0.00	36.0	17.0	16.7
		Concrete Fill	2.0	-21.0	[redacted]	[redacted]				
		Structural Fill	16.7	-23.0	0	36				

[1] Elevations are referenced to NGVD 29 datum

Table 2.5S.4-40D Subsurface Conditions for Bearing Capacity Analysis for the STP 3 & 4 RSW Tunnels (Page 3 of 8)

Average Properties within the Foundation Deformation Zone for Bearing Capacity										
					Shear Strength					
					Layer		Average			
STP	Soil Selection Preference	Soil Layer	Thickness of Layer Below Mat (feet)	Top Elevation [1] (feet)	c(ksf)	Φ(°)	c(ksf)	Φ(°)	Foundation Width, B (feet)	Effective Shear Depth, H' (feet)
3	Assume Failure Along West or East Edge of Mat Alternate Water Table at el. -23.0 ft Long Term Conditions c' and Φ' for Clays Backfill to el. +34.0 ft	Mat Foundation	[illegible]	-18.0	[illegible]	[illegible]	0.0	36.0	17.0	16.7
		Concrete Fill	2.0	-21.0	[illegible]	[illegible]				
		Structural Fill	16.7	-23.0	0	36				

[1] Elevations are referenced to NGVD 29 datum

Table 2.5S.4-40D Subsurface Conditions for Bearing Capacity Analysis for the STP 3 & 4 RSW Tunnels (Page 4 of 8)

Average Properties within the Foundation Deformation Zone for Bearing Capacity										
					Shear Strength					
					Layer		Average			
STP	Soil Selection Preference	Soil Layer	Thickness of Layer Below Mat (feet)	Top Elevation [1] (feet)	c(ksf)	Φ(°)	c(ksf)	Φ(°)	Foundation Width, B (feet)	Effective Shear Depth, H' (feet)
3	Assume Failure Along West or East Edge of Mat Design Water Table at el. +17.0 ft Long Term Conditions c' and Φ' for Clays Backfill to el. +34.0 ft	Mat Foundation	[redacted]	-18.0	[redacted]	[redacted]	0.0	36.0	17.0	16.7
		Concrete Fill	2.0	-21.0	[redacted]	[redacted]				
		Structural Fill	16.7	-23.0	0	36				

[1] Elevations are referenced to NGVD 29 datum

Table 2.5S.4-40D Subsurface Conditions for Bearing Capacity Analysis for the STP 3 & 4 RSW Tunnels (Page 5 of 8)

Average Properties within the Foundation Deformation Zone for Bearing Capacity										
					Shear Strength					
					Layer		Average			
STP	Soil Selection Preference	Soil Layer	Thickness of Layer Below Mat (feet)	Top Elevation [1] (feet)	c(ksf)	Φ(°)	c(ksf)	Φ(°)	Foundation Width, B (feet)	Effective Shear Depth, H' (feet)
4	Assume Failure Along West or East Edge of Mat Alternate Water Table at el. -23.0 ft Short Term Conditions c= S_u for Clays Backfill to el. +34.0 ft	Mat Foundation	!	-18.0	!	!	0.00	36.0	17.0	16.7
		Concrete Fill	2.0	-21.0	!	!				
		Structural Fill	16.7	-23.0	0	36				

[1] Elevations are referenced to NGVD 29 datum

Table 2.5S.4-40D Subsurface Conditions for Bearing Capacity Analysis for the STP 3 & 4 RSW Tunnels (Page 6 of 8)

Average Properties within the Foundation Deformation Zone for Bearing Capacity										
					Shear Strength					
					Layer		Average			
STP	Soil Selection Preference	Soil Layer	Thickness of Layer Below Mat (feet)	Top Elevation [1] (feet)	c(ksf)	Φ(°)	c(ksf)	Φ(°)	Foundation Width, B (feet)	Effective Shear Depth, H' (feet)
4	Assume Failure Along West or East Edge of Mat Design Water Table at el. +17.0 ft Short Term Conditions c= S_u for Clays Backfill to el. +34.0 ft	Mat Foundation	[redacted]	-18.0	[redacted]	[redacted]	0.00	36.0	17.0	16.7
		Concrete Fill	2.0	-21.0	[redacted]	[redacted]				
		Structural Fill	16.7	-23.0	0	36				

[1] Elevations are referenced to NGVD 29 datum

Table 2.5S.4-40D Subsurface Conditions for Bearing Capacity Analysis for the STP 3 & 4 RSW Tunnels (Page 7 of 8)

Average Properties within the Foundation Deformation Zone for Bearing Capacity										
					Shear Strength					
					Layer		Average			
STP	Soil Selection Preference	Soil Layer	Thickness of Layer Below Mat (feet)	Top Elevation [1] (feet)	c(ksf)	Φ(°)	c(ksf)	Φ(°)	Foundation Width, B (feet)	Effective Shear Depth, H (feet)
4	Assume Failure Along West or East Edge of Mat Alternate Water Table at el. -23.0 ft Long Term Conditions c' and Φ' for Clays Backfill to el. +34.0 ft	Mat Foundation	!	-18.0	!	!	0.00	36.0	17.0	16.7
		Concrete Fill	2.0	-21.0	!	!				
		Structural Fill	16.7	-23.0	0	36				

[1] Elevations are referenced to NGVD 29 datum

Table 2.5S.4-40D Subsurface Conditions for Bearing Capacity Analysis for the STP 3 & 4 RSW Tunnels (Page 8 of 8)

Average Properties within the Foundation Deformation Zone for Bearing Capacity										
					Shear Strength					
					Layer		Average			
STP	Soil Selection Preference	Soil Layer	Thickness of Layer Below Mat, (feet)	Top Elevation [1] (feet)	c(ksf)	Φ(°)	c(ksf)	Φ(°)	Foundation Width, B (feet)	Effective Shear Depth, H (feet)
4	Assume Failure Along West or East Edge of Mat Design Water Table at el. +17.0 ft Long Term Conditions c' and Φ' for Clays Backfill to el. +34.0 ft	Mat Foundation	[redacted]	-18.0	[redacted]	[redacted]	0.00	36.0	17.0	16.7
		Concrete Fill	2.0	-21.0	[redacted]	[redacted]				
		Structural Fill	16.7	-23.0	0	36				

[1] Elevations are referenced to NGVD 29 datum

This is a new table to include the new data for the RSW Pump Houses using the new methodology.

Table 2.5S.4-40E Subsurface Conditions for Settlement Analysis for the STP 3 & 4 RSW Pump Houses (Page 1 of 2)

Soil Properties									
	Average Subsurface Conditions					Properties for Settlement Calculation			
	Depth (feet)		Elevation [1] (feet)				Unit Weight, γ (pcf)	Poisson's Ratio μ_d	Elastic Modulus E_d (ksf)
STP	Top	Bottom	Top	Bottom	Stratum	Stratum			
[3]	0	10.0	22.0	32.0	Mat Foundation	Mat Foundation			
	10.0	12.0	32.0	34.0	Concrete Fill	Concrete Fill			
	12.0	18.0	34.0	40.0	D(Clay)	D(Clay)	122	0.15	1,865
	18.0	39.9	40.0	61.9	E(Sand)	E(Sand)	123	0.30	3,145
	39.9	62.7	61.9	84.7	F(Clay)	F(Clay)	125	0.15	1,970
	62.7	116.0	84.7	138.0	J(Clay)	J(Clay)	125	0.15	3,175
	116.0	126.0	138.0	148.0	J(Sand)	J(Sand)	125	0.30	4,755
	126.0	152.7	148.0	174.7	J(Clay)	J(Clay)	125	0.15	3,175
	152.7	172.7	174.7	194.7	K(Clay)	K(Clay)	124	0.15	3,335
	172.7	197.9	194.7	219.9	K(Sand)	K(Sand)	127	0.30	4,915
	197.9	216.7	219.9	238.7	L(Clay)	L(Clay)	124	0.15	2,965
	216.7	226.0	238.7	248.0	M(Sand)	M(Sand)	127	0.30	4,350
	226.0	288.0	248.0	310.0	N(Clay)	N(Clay)	123	0.15	6,020
	288.0	304.0	310.0	326.0	N(Sand)	N(Sand)	128	0.30	11,645
	304.0	309.0	326.0	331.0	N(Clay)	N(Clay)	123	0.15	6,020
	309.0	348.0	331.0	370.0	N(Sand)	N(Sand)	128	0.30	11,645
	348.0	355.0	370.0	377.0	N(Clay)	N(Clay)	123	0.15	6,020
	355.0	372.0	377.0	394.0	N(Sand)	N(Sand)	128	0.30	11,645
	372.0	397.0	394.0	419.0	N(Clay)	N(Clay)	123	0.15	6,020
	397.0	413.0	419.0	435.0	N(Sand)	N(Sand)	128	0.30	11,645
	413.0	548.0	435.0	570.0	N(Clay)	N(Clay)	123	0.15	6,020
	548.0	624.0	570.0	646.0	Deep Silt/Clay, Vs=1585	Silt/Clay	129	0.15	11,190
	624.0	724.0	646.0	746.0	Deep Silty Sand Vs=1585	Silty Sand	126	0.30	12,780
	724.0	824.0	746.0	846.0	Deep Silt/Clay, Vs=1585	Silt/Clay	130	0.15	11,275
	824.0	944.0	846.0	966.0	Deep Silty Sand Vs=1585	Silty Sand	130	0.30	13,185
	944.0	1244.0	966.0	1266.0	Deep Silty Sand Vs=2350	Silty Sand	130	0.30	28,985
	1244.0	1874.0	1266.0	1896.0	Deep Interbedded Vs=2550	Claystone/ Siltstone	130	0.30	34,130
	1874.0	2444.0	1896.0	2466.0	Deep Interbedded Vs=2850	Claystone/ Sand/Silt	135	0.30	44,270

[1] Elevations are referenced to NGVD 29 datum

*/Clay/Sand/Silt

Table 2.5S.4-40E Subsurface Conditions for Settlement Analysis for the STP 3 & 4 RSW Pump Houses (Page 2 of 2)

Soil Properties									
	Average Subsurface Conditions					Properties for Settlement Calculation			
	Depth (feet)		Elevation [1] (feet)				Unit Weight,	Poisson's	Elastic Modulus
STP	Top	Bottom	Top	Bottom	Stratum	Stratum	γ (pcf)	Ratio μ_d	E_d (ksf)
4	0	10.0	22.0	32.0	Mat Foundation	Mat Foundation			
	10.0	12.0	32.0	34.0	Concrete Fill	Concrete Fill			
	12.0	35.6	34.0	57.6	E(Sand)	E(Sand)	123	0.30	3,145
	35.6	63.1	57.6	85.1	F(Clay)	F(Clay)	125	0.15	1,970
	63.1	93.1	85.1	115.1	J(Clay)	J(Clay)	125	0.15	3,175
	93.1	119.1	115.1	141.1	J(Sand)	J(Sand)	125	0.30	4,755
	119.1	148.1	141.1	170.1	J(Clay)	J(Clay)	125	0.15	3,175
	148.1	173.1	170.1	195.1	K(Clay)	K(Clay)	124	0.15	3,335
	173.1	188.1	195.1	210.1	L(Clay)	L(Clay)	124	0.15	2,965
	188.1	233.6	210.1	255.6	M(Sand)	M(Sand)	127	0.30	4,350
	233.6	282.0	255.6	304.0	N(Clay)	N(Clay)	123	0.15	6,020
	282.0	300.0	304.0	322.0	N(Sand)	N(Sand)	128	0.30	11,645
	300.0	311.0	322.0	333.0	N(Clay)	N(Clay)	123	0.15	6,020
	311.0	337.0	333.0	359.0	N(Sand)	N(Sand)	128	0.30	11,645
	337.0	347.0	359.0	369.0	N(Clay)	N(Clay)	123	0.15	6,020
	347.0	367.0	369.0	389.0	N(Sand)	N(Sand)	128	0.30	11,645
	367.0	452.0	389.0	474.0	N(Clay)	N(Clay)	123	0.15	6,020
	452.0	487.0	474.0	509.0	N(Sand)	N(Sand)	128	0.30	11,645
	487.0	548.0	509.0	570.0	N(Clay)	N(Clay)	123	0.15	6,020
	548.0	624.0	570.0	646.0	Deep Silt/Clay Vs=1585	Silt/Clay	129	0.15	11,190
	624.0	724.0	646.0	746.0	Deep Silty Sand Vs=1585	Silty Sand	126	0.30	12,780
	724.0	824.0	746.0	846.0	Deep Silt/Clay Vs=1585	Silt/Clay	130	0.15	11,275
	824.0	944.0	846.0	966.0	Deep Silty Sand Vs=1585	Silty Sand	130	0.30	13,185
	944.0	1244.0	966.0	1266.0	Deep Silty Sand Vs=2350	Silty Sand	130	0.30	28,985
	1244.0	1874.0	1266.0	1896.0	Deep Interbedded Vs=2550	Claystone/ Siltstone*	130	0.30	34,130
	1874.0	2444.0	1896.0	2466.0	Deep Interbedded Vs=2850	Claystone/ Sand/Silt	135	0.30	44,270

[1] Elevations are referenced to NGVD 29 datum

*/Clay/Sand/Silt

This is a new table to include the new data for the RSW Pump Houses using the new methodology.

Table 2.5S.4-40F Subsurface Conditions for Bearing Capacity Analysis for the STP 3 & 4 RSW Pump Houses (Page 1 of 8)

Average Properties within the Foundation Deformation Zone for Bearing Capacity										
STP	Soil Selection Preference	Soil Layer	Thickness of Layer Below Mat (feet)	Top Elevation [1] (feet)	Shear Strength Layer c(ksf)	Shear Strength Layer Φ(°)	Shear Strength Average c(ksf)	Shear Strength Average Φ(°)	Foundation Width, B (feet)	Effective Shear Depth, H' (feet)
3	Assume Failure Along North Edge of Mat Alternate Water Table at el. -34.0 ft Short Term Conditions c= S_u for Clays Backfill to el. +34.0 ft	Mat Foundation	!	-22.0	!	!	2.19	14.2	94.0	60.4
		Concrete Fill	2.0	-32.0	!	!				
		D(Clay)	6.0	-34.0	3.0	0				
		E(Sand)	21.9	-40.0	0.0	35				
		F(Clay)	22.8	-61.9	3.4	0				
		J(Clay)	9.7	-84.7	3.8	0				

[1] Elevations are referenced to NGVD 29 datum

Table 2.5S.4-40F Subsurface Conditions for Bearing Capacity Analysis for the STP 3 & 4 RSW Pump Houses (Page 2 of 8)

Average Properties within the Foundation Deformation Zone for Bearing Capacity										
STP	Soil Selection Preference	Soil Layer	Thickness of Layer Below Mat (feet)	Top Elevation [1] (feet)	Shear Strength Layer c(ksf)	Shear Strength Layer Φ(°)	Shear Strength Average c(ksf)	Shear Strength Average Φ(°)	Foundation Width, B (feet)	Effective Shear Depth, H' (feet)
3	Assume Failure Along North Edge of Mat Design Water Table at el. +17.0 ft Short Term Conditions c= S_u for Clays Backfill to el. +34.0 ft	Mat Foundation	!	-22.0	!	!	2.19	14.2	94.0	60.4
		Concrete Fill	2.0	-32.0	!	!				
		D(Clay)	6.0	-34.0	3.0	0				
		E(Sand)	21.9	-40.0	0.0	35				
		F(Clay)	22.8	-61.9	3.4	0				
		J(Clay)	9.7	-84.7	3.8	0				

[1] Elevations are referenced to NGVD 29 datum

Table 2.5S.4-40F Subsurface Conditions for Bearing Capacity Analysis for the STP 3 & 4 RSW Pump Houses (Page 3 of 8)

Average Properties within the Foundation Deformation Zone for Bearing Capacity										
STP	Soil Selection Preference	Soil Layer	Thickness of Layer Below Mat (feet)	Top Elevation [1] (feet)	Shear Strength Layer c(ksf)	Shear Strength Layer Φ(°)	Shear Strength Average c(ksf)	Shear Strength Average Φ(°)	Foundation Width, B (feet)	Effective Shear Depth, H' (feet)
3	Assume Failure Along North Edge of Mat Alternate Water Table at el. -34.0 ft Long Term Conditions c' and Φ' for Clays Backfill to el. +34.0 ft	Mat Foundation	[redacted]	-22.0	[redacted]	[redacted]	1.34	19.4	94.0	66.3
		Concrete Fill	2.0	-32.0	[redacted]	[redacted]				
		D(Clay)	6.0	-34.0	1.2	16				
		E(Sand)	21.9	-40.0	0.0	35				
		F(Clay)	22.8	-61.9	2.0	8				
		J(Clay)	15.6	-84.7	2.3	11				

[1] Elevations are referenced to NGVD 29 datum

Table 2.5S.4-40F Subsurface Conditions for Bearing Capacity Analysis for the STP 3 & 4 RSW Pump Houses (Page 4 of 8)

Average Properties within the Foundation Deformation Zone for Bearing Capacity										
STP	Soil Selection Preference	Soil Layer	Thickness of Layer Below Mat (feet)	Top Elevation [1] (feet)	Shear Strength Layer c(ksf)	Shear Strength Layer Φ(°)	Shear Strength Average c(ksf)	Shear Strength Average Φ(°)	Foundation Width, B (feet)	Effective Shear Depth, H' (feet)
3	Assume Failure Along North Edge of Mat	Mat Foundation	!	22.0	!	!	1.34	19.4	94.0	66.3
		Concrete Fill	2.0	32.0	!	!				
	Design Water Table at el. +17.0 ft	D(Clay)	6.0	-34.0	1.2	16				
	Long Term Conditions	E(Sand)	21.9	-40.0	0.0	35				
	c' and Φ' for Clays	F(Clay)	22.8	-61.9	2.0	8				
	Backfill to el. +34.0 ft	J(Clay)	15.6	-84.7	2.3	11				

[1] Elevations are referenced to NGVD 29 datum

Table 2.5S.4-40F Subsurface Conditions for Bearing Capacity Analysis for the STP 3 & 4 RSW Pump Houses (Page 5 of 8)

Average Properties within the Foundation Deformation Zone for Bearing Capacity										
STP	Soil Selection Preference	Soil Layer	Thickness of Layer Below Mat (feet)	Top Elevation [1] (feet)	Shear Strength Layer c(ksf)	Shear Strength Layer Φ(°)	Shear Strength Average c(ksf)	Shear Strength Average Φ(°)	Foundation Width, B (feet)	Effective Shear Depth, H' (feet)
4	Assume Failure Along North Edge of Mat Alternate Water Table at el. -34.0 ft Short Term Conditions c= S_u for Clays Backfill to el. +34.0 ft	Mat Foundation	[redacted]	-22.0	[redacted]	[redacted]	2.16	15.1	94.0	61.3
		Concrete Fill	2.0	-32.0	[redacted]	[redacted]				
		E(Sand)	23.6	-34.0	0.0	35				
		F(Clay)	27.5	-57.6	3.4	0				
		J(Clay)	10.2	-85.1	3.8	0				

[1] Elevations are referenced to NGVD 29 datum

Table 2.5S.4-40F. Subsurface Conditions for Bearing Capacity Analysis for the STP 3 & 4 RSW Pump Houses (Page 6 of 8)

Average Properties within the Foundation Deformation Zone for Bearing Capacity										
STP	Soil Selection Preference	Soil Layer	Thickness of Layer Below Mat (feet)	Top Elevation [1] (feet)	Shear Strength Layer c(ksf)	Shear Strength Layer Φ(°)	Shear Strength Average c(ksf)	Shear Strength Average Φ(°)	Foundation Width, B (feet)	Effective Shear Depth, H' (feet)
4	Assume Failure Along North Edge of Mat Design Water Table at el. +17.0 ft Short Term Conditions c= S_u for Clays Backfill to el. +34.0 ft	Mat Foundation	[illegible]	-22.0	[illegible]	[illegible]	2.16	15.1	94.0	61.3
		Concrete Fill	2.0	-32.0	[illegible]	[illegible]				
		E(Sand)	23.6	-34.0	0.0	35				
		F(Clay)	27.5	-57.6	3.4	0				
		J(Clay)	10.2	-85.1	3.8	0				

[1] Elevations are referenced to NGVD 29 datum

Table 2.5S.4-40F Subsurface Conditions for Bearing Capacity Analysis for the STP 3 & 4 RSW Pump Houses (Page 7of 8)

Average Properties within the Foundation Deformation Zone for Bearing Capacity										
STP	Soil Selection Preference	Soil Layer	Thickness of Layer Below Mat (feet)	Top Elevation [1] (feet)	Shear Strength Layer c(ksf)	Shear Strength Layer Φ(°)	Shear Strength Average c(ksf)	Shear Strength Average Φ(°)	Foundation Width, B (feet)	Effective Shear Depth, H' (feet)
4	Assume Failure Along North Edge of Mat Alternate Water Table at el. -34.0 ft Long Term Conditions c' and Φ' for Clays Backfill to el. +34.0 ft	Mat Foundation	[illegible]	-22.0	[illegible]	[illegible]	1.36	19.4	94.0	66.4
		Concrete Fill	2.0	-32.0	[illegible]	[illegible]				
		E(Sand)	23.6	-34.0	0.0	35				
		F(Clay)	27.5	-57.6	2.0	8				
		J(Clay)	15.3	-85.1	2.3	11				

[1] Elevations are referenced to NGVD 29 datum

Table 2.5S.4-40F Subsurface Conditions for Bearing Capacity Analysis for the STP 3 & 4 RSW Pump Houses (Page 8 of 8)

Average Properties within the Foundation Deformation Zone for Bearing Capacity										
STP	Soil Selection Preference	Soil Layer	Thickness of Layer Below Mat (feet)	Top Elevation [1] (feet)	Shear Strength Layer c(ksf)	Shear Strength Layer Φ(°)	Shear Strength Average c(ksf)	Shear Strength Average Φ(°)	Foundation Width, B (feet)	Effective Shear Depth, H' (feet)
4	Assume Failure Along North Edge of Mat Design Water Table at el. +17.0 ft Long Term Conditions c' and Φ' for Clays Backfill to el. +34.0 ft	Mat Foundation	!	22.0	!	!	1.36	19.4	94.0	66.4
		Concrete Fill	2.0	32.0	!	!				
		E(Sand)	23.6	34.0	0.0	35				
		F(Clay)	27.5	57.6	2.0	8				
		J(Clay)	15.3	85.1	2.3	11				

[1] Elevations are referenced to NGVD 29 datum

This table has been restructured and includes the new data and methodology.

Table 2.5S.4-41A Summary of Average Parameters for Bearing Capacity (Page 1 of 3)

Structure	Final Embedment, D (feet) To Bottom of Concrete Fill	Length, L (feet)	Width, B (feet)	B/L	STP	Soil Strength Selection	Embedment, D (feet)	c(ksf)	ϕ(°)	N_c	N_q	N_γ	S_c	S_q	S_γ	d_c	d_q	d_γ	R_b
Reactor Buildings	94.3	217.5	207.7	0.95	3	Short Term	94.3	3.40	3.6	6.08	1.38	0.04	1.22	1.06	0.62	1.18	1.05	1.00	0.62
						Short Term	94.3	3.40	3.6	6.08	1.38	0.04	1.22	1.06	0.62	1.18	1.05	1.00	0.62
						Long Term	94.3	2.08	12.8	9.68	3.19	0.74	1.31	1.21	0.62	1.18	1.12	1.00	0.62
						Long Term	94.3	2.08	12.8	9.68	3.19	0.74	1.31	1.21	0.62	1.18	1.12	1.00	0.62
					4	Short Term	94.3	2.56	11.7	9.15	2.90	0.59	1.30	1.19	0.62	1.18	1.12	1.00	0.62
						Short Term	94.3	2.56	11.7	9.15	2.90	0.59	1.30	1.19	0.62	1.18	1.12	1.00	0.62
						Long Term	94.3	1.62	17.7	12.89	5.12	1.97	1.38	1.29	0.62	1.18	1.14	1.00	0.62
						Long Term	94.3	1.62	17.7	12.89	5.12	1.97	1.38	1.29	0.62	1.18	1.14	1.00	0.62
Control Buildings	78.3	185.0	80.1	0.43	3	Short Term	78.3	1.07	26.7	23.43	12.79	8.89	1.24	1.19	0.83	1.39	1.30	1.00	0.72
						Short Term	78.3	1.07	26.7	23.43	12.79	8.89	1.24	1.19	0.83	1.39	1.30	1.00	0.72
						Long Term	78.3	0.71	28.6	26.98	15.70	12.01	1.25	1.21	0.83	1.39	1.29	1.00	0.72
						Long Term	78.3	0.71	28.6	26.98	15.70	12.01	1.25	1.21	0.83	1.39	1.29	1.00	0.72
					4	Short Term	78.3	2.04	16.6	12.02	4.57	1.59	1.16	1.12	0.83	1.39	1.30	1.00	0.72
						Short Term	78.3	2.04	16.6	12.02	4.57	1.59	1.16	1.12	0.83	1.39	1.30	1.00	0.72
						Long Term	78.3	1.29	20.5	15.34	6.74	3.23	1.19	1.15	0.83	1.39	1.31	1.00	0.72
						Long Term	78.3	1.29	20.5	15.34	6.74	3.23	1.19	1.15	0.83	1.39	1.31	1.00	0.72
UHS Basins	34.0	312.0	164.0	0.53	3	Short Term	34.0	1.17	24.1	19.45	9.70	5.84	1.26	1.21	0.79	1.08	1.06	1.00	0.64
						Short Term	34.0	1.17	24.1	19.45	9.70	5.84	1.26	1.21	0.79	1.08	1.06	1.00	0.64
						Long Term	34.0	0.68	26.8	23.65	12.96	9.08	1.29	1.24	0.79	1.08	1.06	1.00	0.64
						Long Term	34.0	0.68	26.8	23.65	12.96	9.08	1.29	1.24	0.79	1.08	1.06	1.00	0.64
					4	Short Term	34.0	2.30	12.5	9.55	3.12	0.71	1.17	1.11	0.79	1.08	1.06	1.00	0.64
						Short Term	34.0	2.30	12.5	9.55	3.12	0.71	1.17	1.11	0.79	1.08	1.06	1.00	0.64
						Long Term	34.0	1.26	19.6	14.45	6.14	2.74	1.22	1.18	0.79	1.08	1.07	1.00	0.64
						Long Term	34.0	1.26	19.6	14.45	6.14	2.74	1.22	1.18	0.79	1.08	1.07	1.00	0.64

Table 2.5S.4-41A Summary of Average Parameters for Bearing Capacity (Page 2 of 3)

Structure	Final Embedment, D (feet) To Bottom of Concrete Fill	Length, L (feet)	Width, B (feet)	B/L	STP	Soil Strength Selection	Embedment, D (feet)	c (ksf)	φ (°)	N_c	N_q	N_γ	S_c	S_q	S_γ	d_c	d_q	d_γ	R_b
RSW Pump Houses	68.0	170.0	94.0	0.55	3	Short Term	68.0	2.19	14.2	10.51	3.67	1.02	1.19	1.14	0.78	1.29	1.21	1.00	0.70
						Short Term	68.0	2.19	14.2	10.51	3.67	1.02	1.19	1.14	0.78	1.29	1.21	1.00	0.70
						Long Term	68.0	1.34	19.4	14.25	6.00	2.64	1.23	1.18	0.78	1.29	1.23	1.00	0.70
						Long Term	68.0	1.34	19.4	14.25	6.00	2.64	1.23	1.18	0.78	1.29	1.23	1.00	0.70
					4	Short Term	68.0	2.16	15.1	11.03	3.97	1.20	1.20	1.14	0.78	1.29	1.21	1.00	0.70
						Short Term	68.0	2.16	15.1	11.03	3.97	1.20	1.20	1.14	0.78	1.29	1.21	1.00	0.70
						Long Term	68.0	1.36	19.4	14.27	6.02	2.65	1.23	1.18	0.78	1.29	1.23	1.00	0.70
						Long Term	68.0	1.36	19.4	14.27	6.02	2.65	1.23	1.18	0.78	1.29	1.23	1.00	0.70
RSW Tunnels	57.0	560.0	17.0	0.03	3	Short Term	57.0	0.00	36.0	50.59	37.75	40.05	1.02	1.02	0.99	1.51	1.32	1.00	0.89
						Short Term	57.0	0.00	36.0	50.59	37.75	40.05	1.02	1.02	0.99	1.51	1.32	1.00	0.89
						Long Term	57.0	0.00	36.0	50.59	37.75	40.05	1.02	1.02	0.99	1.51	1.32	1.00	0.89
						Long Term	57.0	0.00	36.0	50.59	37.75	40.05	1.02	1.02	0.99	1.51	1.32	1.00	0.89
					4	Short Term	57.0	0.00	36.0	50.59	37.75	40.05	1.02	1.02	0.99	1.51	1.32	1.00	0.89
						Short Term	57.0	0.00	36.0	50.59	37.75	40.05	1.02	1.02	0.99	1.51	1.32	1.00	0.89
						Long Term	57.0	0.00	36.0	50.59	37.75	40.05	1.02	1.02	0.99	1.51	1.32	1.00	0.89
						Long Term	57.0	0.00	36.0	50.59	37.75	40.05	1.02	1.02	0.99	1.51	1.32	1.00	0.89
Diesel Generator Fuel Oil Storage Vaults (No. 1)	41.0	84.5	44.0	0.52	3	Short Term	41.0	0.00	36.0	50.59	37.75	40.05	1.39	1.31	0.79	1.37	1.23	1.00	0.78
						Short Term	41.0	0.00	36.0	50.59	37.75	40.05	1.39	1.31	0.79	1.37	1.23	1.00	0.78
						Long Term	41.0	0.00	36.0	50.59	37.75	40.05	1.39	1.31	0.79	1.37	1.23	1.00	0.78
						Long Term	41.0	0.00	36.0	50.59	37.75	40.05	1.39	1.31	0.79	1.37	1.23	1.00	0.78
					4	Short Term	41.0	0.00	36.0	50.59	37.75	40.05	1.39	1.31	0.79	1.37	1.23	1.00	0.78
						Short Term	41.0	0.00	36.0	50.59	37.75	40.05	1.39	1.31	0.79	1.37	1.23	1.00	0.78
						Long Term	41.0	0.00	36.0	50.59	37.75	40.05	1.39	1.31	0.79	1.37	1.23	1.00	0.78
						Long Term	41.0	0.00	36.0	50.59	37.75	40.05	1.39	1.31	0.79	1.37	1.23	1.00	0.78

Table 2.5S.4-41A Summary of Average Parameters for Bearing Capacity (Page 3 of 3)

Structure	Final Embedment, D (feet) To Bottom of Concrete Fill	Length, L (feet)	Width, B (feet)	B/L	STP	Soil Strength Selection	Embedment, D (feet)	c (ksf)	ϕ (°)	N_c	N_q	N_γ	S_c	S_q	S_γ	d_c	d_q	d_γ	R_b
Diesel Generator Fuel Oil Storage Vaults (No. 2)	41.0	84.5	44.0	0.52	3	Short Term	41.0	0.00	36.0	50.59	37.75	40.05	1.39	1.31	0.79	1.37	1.23	1.00	0.78
						Short Term	41.0	0.00	36.0	50.59	37.75	40.05	1.39	1.31	0.79	1.37	1.23	1.00	0.78
						Long Term	41.0	0.00	36.0	50.59	37.75	40.05	1.39	1.31	0.79	1.37	1.23	1.00	0.78
						Long Term	41.0	0.00	36.0	50.59	37.75	40.05	1.39	1.31	0.79	1.37	1.23	1.00	0.78
					4	Short Term	41.0	0.00	36.0	50.59	37.75	40.05	1.39	1.31	0.79	1.37	1.23	1.00	0.78
						Short Term	41.0	0.00	36.0	50.59	37.75	40.05	1.39	1.31	0.79	1.37	1.23	1.00	0.78
						Long Term	41.0	0.00	36.0	50.59	37.75	40.05	1.39	1.31	0.79	1.37	1.23	1.00	0.78
						Long Term	41.0	0.00	36.0	50.59	37.75	40.05	1.39	1.31	0.79	1.37	1.23	1.00	0.78
Diesel Generator Fuel Oil Storage Vaults (No. 3)	41.0	84.5	44.0	0.52	3	Short Term	41.0	0.32	32.7	37.81	25.32	23.46	1.35	1.28	0.79	1.37	1.25	1.00	0.78
						Short Term	41.0	0.32	32.7	37.81	25.32	23.46	1.35	1.28	0.79	1.37	1.25	1.00	0.78
						Long Term	41.0	0.12	34.0	42.15	29.43	28.76	1.36	1.29	0.79	1.37	1.24	1.00	0.78
						Long Term	41.0	0.12	34.0	42.15	29.43	28.76	1.36	1.29	0.79	1.37	1.24	1.00	0.78
					4	Short Term	41.0	0.00	35.6	48.89	36.04	37.68	1.38	1.30	0.79	1.37	1.23	1.00	0.78
						Short Term	41.0	0.00	35.6	48.89	36.04	37.68	1.38	1.30	0.79	1.37	1.23	1.00	0.78
						Long Term	41.0	0.00	35.6	48.89	36.04	37.68	1.38	1.30	0.79	1.37	1.23	1.00	0.78
						Long Term	41.0	0.00	35.6	48.89	36.04	37.68	1.38	1.30	0.79	1.37	1.23	1.00	0.78

This table replaces COLA Rev. 2 Table 2.5S.4-41a (bottom half) and has been restructured to include the new data and methodology.

Table 2.5S.4-41B Bearing Capacity of Foundation (Page 1 of 2)

Structure	STP	Soil Strength Selection [1]	Ultimate Bearing Capacity at Base of Concrete Fill, q_{ULT}, (ksf)	Factor of Safety (FOS) [2]
Reactor Buildings	3	Short Term [3]	47.4	3.03
		Short Term [4]	41.5	3.78
		Long Term [3]	82.8	5.29
		Long Term [4]	66.2	6.03
	4	Short Term [3]	81.7	5.23
		Short Term [4]	66.9	6.10
		Long Term [3]	124.8	7.98
		Long Term [4]	96.1	8.75
Control Buildings	3	Short Term [3]	244.0	15.95
		Short Term [4]	184.0	16.03
		Long Term [3]	282.4	18.46
		Long Term [4]	208.4	18.16
	4	Short Term [3]	105.2	6.87
		Short Term [4]	85.0	7.41
		Long Term [3]	133.9	8.75
		Long Term [4]	103.1	8.99
UHS Basins	3	Short Term [3]	97.5	10.27
		Short Term [4]	87.0	10.31
		Long Term [3]	115.8	12.19
		Long Term [4]	101.5	12.03
	4	Short Term [3]	44.7	4.71
		Short Term [4]	41.6	4.93
		Long Term [3]	62.8	6.61
		Long Term [4]	56.4	6.68
RSW Pump Houses	3	Short Term [3]	78.5	12.46
		Short Term [4]	65.8	21.11
		Long Term [3]	106.2	16.86
		Long Term [4]	84.2	27.02
	4	Short Term [3]	84.1	13.35
		Short Term [4]	70.2	25.52
		Long Term [3]	107.0	16.98
		Long Term [4]	85.0	27.25
RSW Tunnels	3	Short Term [3]	370.2	71.47
		Short Term [4]	270.3	100.69
		Long Term [3]	370.2	71.47
		Long Term [4]	270.3	100.69
	4	Short Term [3]	370.2	71.47
		Short Term [4]	270.3	100.69
		Long Term [3]	370.2	71.47
		Long Term [4]	270.3	100.69
Diesel Generator Fuel Oil Storage Vaults (No. 1)	3	Short Term [3]	340.0	123.61
		Short Term [4]	268.1	207.61
		Long Term [3]	340.0	123.61
		Long Term [4]	268.1	207.61
	4	Short Term [3]	340.0	123.61
		Short Term [4]	268.1	207.61
		Long Term [3]	340.0	123.61
		Long Term [4]	268.1	207.61

Table 2.5S.4-41B Bearing Capacity of Foundation (Page 2 of 2)

Structure	STP	Soil Strength Selection [1]	Ultimate Bearing Capacity at Base of Concrete Fill, q_{ULT}, (ksf)	Factor of Safety (FOS) [2]
Diesel Generator Fuel Oil Storage Vaults (No. 2)	3	Short Term [3]	340.0	123.61
		Short Term [4]	268.1	207.61
		Long Term [3]	340.0	123.61
		Long Term [4]	268.1	207.61
	4	Short Term [3]	340.0	123.61
		Short Term [4]	268.1	207.61
		Long Term [3]	340.0	123.61
		Long Term [4]	268.1	207.61
Diesel Generator Fuel Oil Storage Vaults (No. 3)	3	Short Term [3]	245.8	89.34
		Short Term [4]	197.6	152.98
		Long Term [3]	271.0	98.50
		Long Term [4]	214.9	166.40
	4	Short Term [3]	322.0	117.07
		Short Term [4]	253.4	196.19
		Long Term [3]	322.0	117.07
		Long Term [4]	253.4	196.19

[1] Short term - undrained condition, Long term – drained condition
[2] See Section 2.5S.4.10.3 STP 3 & 4 Bearing Capacity Evaluation
[3] Water table at bottom of concrete fill
[4] Water table at +17.0 feet

This table has been restructured to include the new data and methodology.

Table 2.5S.4-42 Estimated Foundation Settlements (Page 1 of 3)

Structure	Unit	Location	S_{ss} (in)	S_{os} (in)	S_{sf} (in)	S_{bf} (in)	S_c (in)	S (in)	Max† Differential Settlement (in)	Max† Angular Distortion (in/in)
		Center	7.13	1.46	1.82	0.19	0.26	10.86		
		North Edge*	4.80	2.66	1.51	0.29	0.03	9.30		
		South Edge*	5.11	1.22	3.39	0.13	0.00	9.85		
		East Edge*	5.30	1.07	2.50	0.15	0.00	9.02	1.84	1/600
	3	West Edge*	5.28	2.56	2.40	0.35	0.24	10.84		
		NE Corner	3.58	1.84	2.02	0.23	0.00	7.67		
		NW Corner	3.58	2.80	2.27	0.37	0.00	9.02		
		SE Corner	3.89	0.95	3.45	0.10	0.33	8.72		
Reactor Buildings		SW Corner	3.90	1.77	3.91	0.17	0.23	9.97		
		Center	6.72	1.43	1.78	0.19	0.02	10.14		
		North Edge*	5.10	2.64	1.49	0.29	0.00	9.52		
		South Edge*	4.85	1.20	3.25	0.12	0.00	9.43		
		East Edge*	5.03	1.06	2.40	0.15	0.00	8.63	1.51	1/750
	4	West Edge*	5.02	2.46	2.34	0.34	0.07	10.24		
		NE Corner	3.94	1.82	2.08	0.23	0.00	8.06		
		NW Corner	3.94	2.81	2.27	0.37	0.00	9.38		
		SE Corner	3.74	0.93	3.31	0.10	0.15	8.23		
		SW Corner	3.75	1.72	3.75	0.17	0.05	9.44		
		Center	2.54	3.44	1.40	0.39	0.00	7.77		
		North Edge*	1.78	3.13	1.33	0.55	0.00	6.80		
		South Edge*	1.78	5.28	1.48	0.30	0.00	8.85		1/450
		East Edge*	1.43	2.72	1.53	0.32	0.00	6.01	1.76	
	3	West Edge*	1.43	3.38	2.06	0.42	0.00	7.29		
		NE Corner	1.06	2.62	1.19	0.46	0.00	5.33		
		NW Corner	1.06	3.05	2.01	0.56	0.00	6.68		
		SE Corner	1.06	4.03	1.94	0.25	0.00	7.27		
Control Buildings		SW Corner	1.06	4.95	2.18	0.37	0.00	8.55		
		Center	3.01	3.51	1.40	0.40	0.00	8.32		
		North Edge*	2.03	3.25	1.33	0.58	0.00	7.18		
		South Edge*	2.03	5.67	1.49	0.31	0.00	9.49		1/400
		East Edge*	1.66	2.78	1.59	0.32	0.00	6.35	1.97	
	4	West Edge*	1.66	3.51	2.08	0.42	0.00	7.67		
		NE Corner	1.18	2.72	1.19	0.48	0.00	5.57		
		NW Corner	1.18	3.21	2.03	0.58	0.00	7.00		
		SE Corner	1.18	4.38	2.08	0.25	0.03	7.91		
		SW Corner	1.18	5.40	2.23	0.37	0.00	9.18		

Notes: S_{ss} = Settlement due to the loading of the structure itself S_{os} = Settlement due to the loading of other structures S_{sf} = Settlement due to the structural backfill other than placed below the footings of all structures S_{bf} = Settlement due to the structural backfill placed underneath the footings of all structures S_c = Settlement due to the consolidation of the clay layers for load exceeding the preconsolidation pressure S = Total settlement

† Differential settlement and the angular distortion (tilt) are with respect to the center and the midpoint of an edge of the structures

* At the mid point of the edge

Table 2.5S.4-42 Estimated Foundation Settlements (Page 2 of 3)

Structure	Unit	Location	S_{ss} (in)	S_{os} (in)	S_{sf} (in)	S_{bf} (in)	S_c (in)	S (in)	Max† Differential Settlement (in)	Max† Angular Distortion (in/in)
		Center	5.86	0.68	1.58	0.03	0.00	8.15		
		North Edge‡	3.72	1.77	2.08	0.04	0.00	7.61		
		South Edge‡	3.72	0.41	2.54	0.02	0.00	6.69		1/700
		East Edge‡	3.27	0.43	2.26	0.03	0.00	5.99	2.15	
	3	West Edge‡	3.27	0.65	2.15	0.03	0.00	6.10		
		NE Corner	2.16	0.59	2.39	0.03	0.00	5.18		
		NW Corner	2.16	1.49	2.80	0.04	0.00	6.49		
		SE Corner	2.16	0.31	2.57	0.02	0.00	5.07		
UHS Basins		SW Corner	2.16	0.40	2.41	0.02	0.00	5.00		
		Center	6.11	0.69	1.63	0.03	0.00	8.46		
		North Edge‡	3.88	1.84	2.17	0.04	0.00	7.92		
		South Edge‡	3.88	0.41	2.63	0.02	0.00	6.94		1/650
		East Edge‡	3.41	0.43	2.33	0.03	0.00	6.20	2.26	
	4	West Edge‡	3.41	0.66	2.21	0.03	0.00	6.31		
		NE Corner	2.26	0.60	2.47	0.03	0.00	5.35		
		NW Corner	2.26	1.55	2.89	0.04	0.00	6.73		
		SE Corner	2.26	0.31	2.66	0.02	0.00	5.25		
		SW Corner	2.26	0.40	2.49	0.02	0.00	5.17		
		Center	2.31	2.43	2.37	0.05	0.00	7.17		
		North Edge‡	1.52	2.23	3.53	0.06	0.00	7.33		
		South Edge‡	1.52	3.41	1.87	0.04	0.00	6.84		1/1750
		East Edge‡	1.34	2.38	2.94	0.05	0.00	6.71		
	3	West Edge‡	1.34	1.83	3.48	0.05	0.00	6.69	0.48	
		NE Corner	0.92	2.00	3.37	0.05	0.00	6.35		
		NW Corner	0.92	1.68	4.43	0.06	0.00	7.10		
		SE Corner	0.92	3.53	2.18	0.04	0.00	6.67		
RSW Pump Houses		SW Corner	0.92	2.35	2.61	0.04	0.00	5.92		
		Center	2.21	2.38	2.32	0.05	0.00	6.95		
		North Edge‡	1.45	2.17	3.39	0.06	0.00	7.08		
		South Edge‡	1.45	3.30	1.83	0.04	0.00	6.62		1/1700
		East Edge‡	1.28	2.33	2.81	0.04	0.00	6.46		
	4	West Edge‡	1.28	1.79	3.34	0.05	0.00	6.46	0.49	
		NE Corner	0.89	1.95	3.23	0.05	0.00	6.12		
		NW Corner	0.89	1.64	4.28	0.06	0.00	6.87		
		SE Corner	0.89	3.40	2.10	0.04	0.00	6.43		
		SW Corner	0.89	2.27	2.52	0.04	0.00	5.72		

Notes: S_{ss} = Settlement due to the loading of the structure itself S_{os} = Settlement due to the loading of other structures S_{sf} = Settlement due to the structural backfill other than placed below the footings of all structures S_{bf} = Settlement due to the structural backfill placed underneath the footings of all structures S_c = Settlement due to the consolidation of the clay layers for load exceeding the preconsolidation pressure S = Total settlement

† Differential settlement and the angular distortion (tilt) are with respect to the center and the midpoint of an edge of the structures

‡ At the mid point of the edge

Table 2.5S.4-42 Estimated Foundation Settlements (Page 3 of 3)

Structure	STP	Location	S_{ss} (in)	S_{os} (in)	S_{sf} (in)	S_{sr} (in)	S_c (in)	S (in)	Max† Differential Settlement (in)	Max† Angular Distortion (in/in)
		Center	0.66	5.29	3.23	0.22	2.37	11.78		
	3	North Edge*	0.37	3.63	2.07	0.73	0.00	6.80	4.98	1/700
RSW Tunnels		South Edge*	0.38	4.35	2.33	0.05	0.00	7.11		
		Center	0.68	5.53	3.36	0.22	2.15	11.95		
	4	North Edge*	0.38	3.79	2.13	0.77	0.00	7.07		
		South Edge*	0.37	4.26	2.31	0.05	0.00	6.98	4.97	1/700
		Center	0.37	2.58	4.51	0.10	0.32	7.87		
		North Edge*	0.26	3.09	4.19	0.12	0.69	8.35	0.47	1/1000
	3	South Edge*	0.26	2.53	4.52	0.08	0.25	7.63		
		East Edge*	0.29	2.54	4.47	0.09	0.31	7.70		
Diesel Generator Fuel Oil Storage Vault No. 1		West Edge*	0.29	2.68	4.54	0.10	0.31	7.91		
		Center	0.35	2.51	4.20	0.09	0.05	7.20		
		North Edge*	0.24	2.96	3.87	0.12	0.47	7.66	0.46	1/1050
	4	South Edge*	0.25	2.43	4.20	0.08	0.00	6.95		
		East Edge*	0.28	2.47	4.15	0.09	0.04	7.04		
		West Edge*	0.28	2.60	4.22	0.10	0.04	7.23		
		Center	0.38	1.94	3.86	0.07	0.00	6.25		
		North Edge*	0.27	2.36	3.59	0.08	0.00	6.30		
	3	South Edge*	0.27	1.77	3.90	0.06	0.00	6.00		
		East Edge*	0.30	1.80	3.59	0.07	0.00	5.76	0.49	1/500
		West Edge*	0.30	2.07	4.05	0.07	0.00	6.49		
Diesel Generator Fuel Oil Storage Vault No. 2		Center	0.36	1.85	3.51	0.07	0.00	5.79		
		North Edge*	0.25	2.22	3.25	0.08	0.00	5.80		
	4	South Edge*	0.25	1.70	3.55	0.06	0.00	5.56		
		East Edge*	0.28	1.73	3.27	0.07	0.00	5.34	0.45	1/550
		West Edge*	0.28	1.97	3.67	0.07	0.00	6.00		
		Center	0.37	2.61	3.64	0.06	0.01	6.69		
		North Edge*	0.29	2.47	4.20	0.07	0.03	7.05		1/650
	3	South Edge*	0.29	3.00	3.22	0.06	0.00	6.57		
		East Edge*	0.26	2.44	3.55	0.06	0.00	6.30	0.38	
Diesel Generator Fuel Oil Storage Vault No. 3		West Edge*	0.26	2.79	3.78	0.07	0.13	7.02		
		Center	0.36	2.60	3.62	0.06	0.00	6.65		
		North Edge*	0.29	2.45	4.17	0.07	0.00	6.97		1/750
	4	South Edge*	0.29	3.02	3.21	0.06	0.00	6.58		
		East Edge*	0.25	2.42	3.54	0.06	0.00	6.28	0.38	
		West Edge*	0.25	2.78	3.77	0.07	0.00	6.87		

Notes: S_{ss} = Settlement due to the loading of the structure itself S_{os} = Settlement due to the loading of other structures S_{sf} = Settlement due to the structural backfill other than placed below the footings of all structures S_{sr} = Settlement due to the structural backfill placed underneath the footings of all structures S_c = Settlement due to the consolidation of the clay layers for load exceeding the preconsolidation pressure S = Total settlement

† Differential settlement and the angular distortion (tilt) are with respect to the center and the midpoint of an edge of the structures

* At the mid point of the edge

This Figure was renumbered and replaced in its entirety.

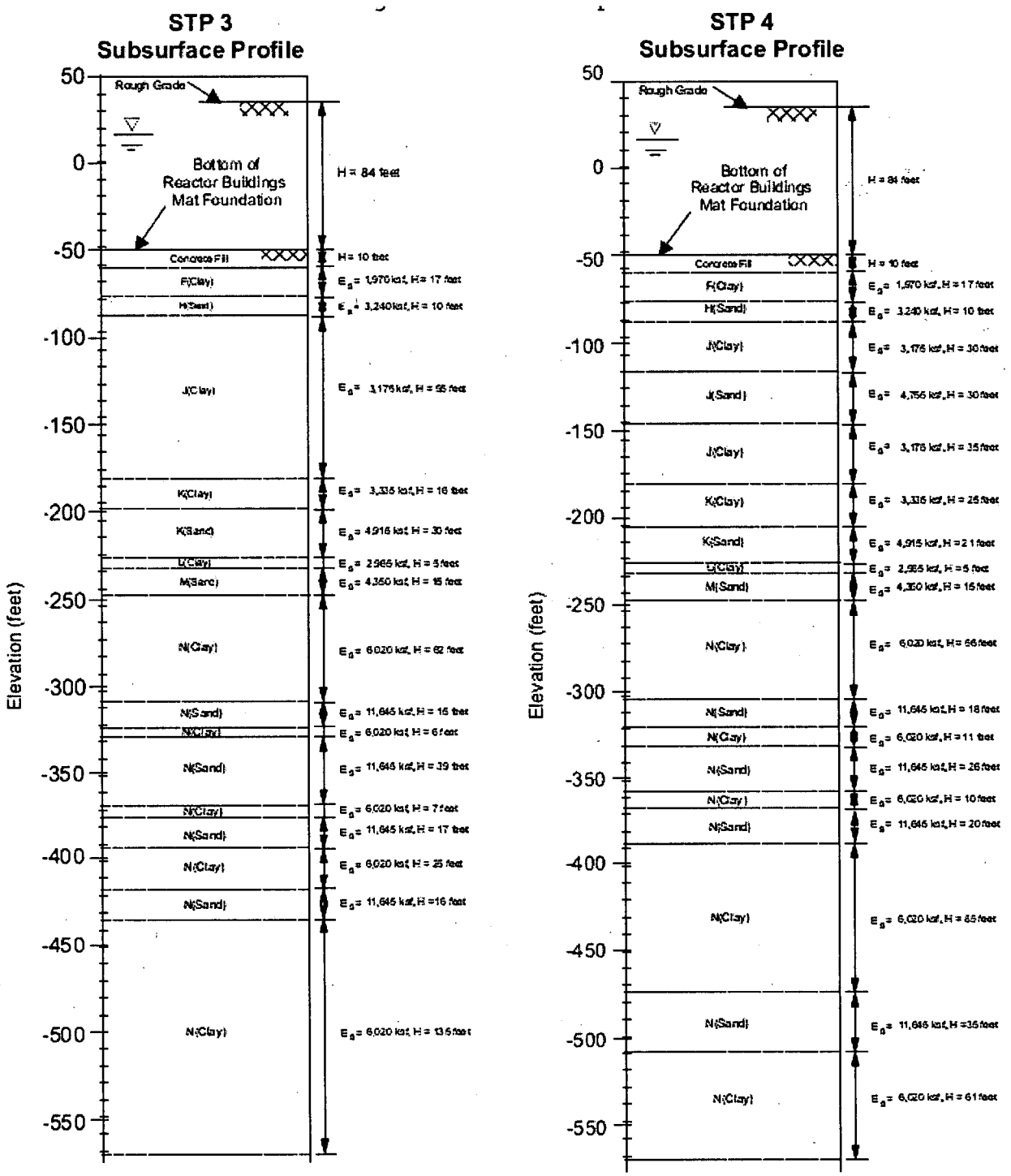

Figure 2.5S.4-67 71 Adopted Subsurface profiles for the STP 3 & 4 Reactor Buildings

This Figure was renumbered and replaced in its entirety.

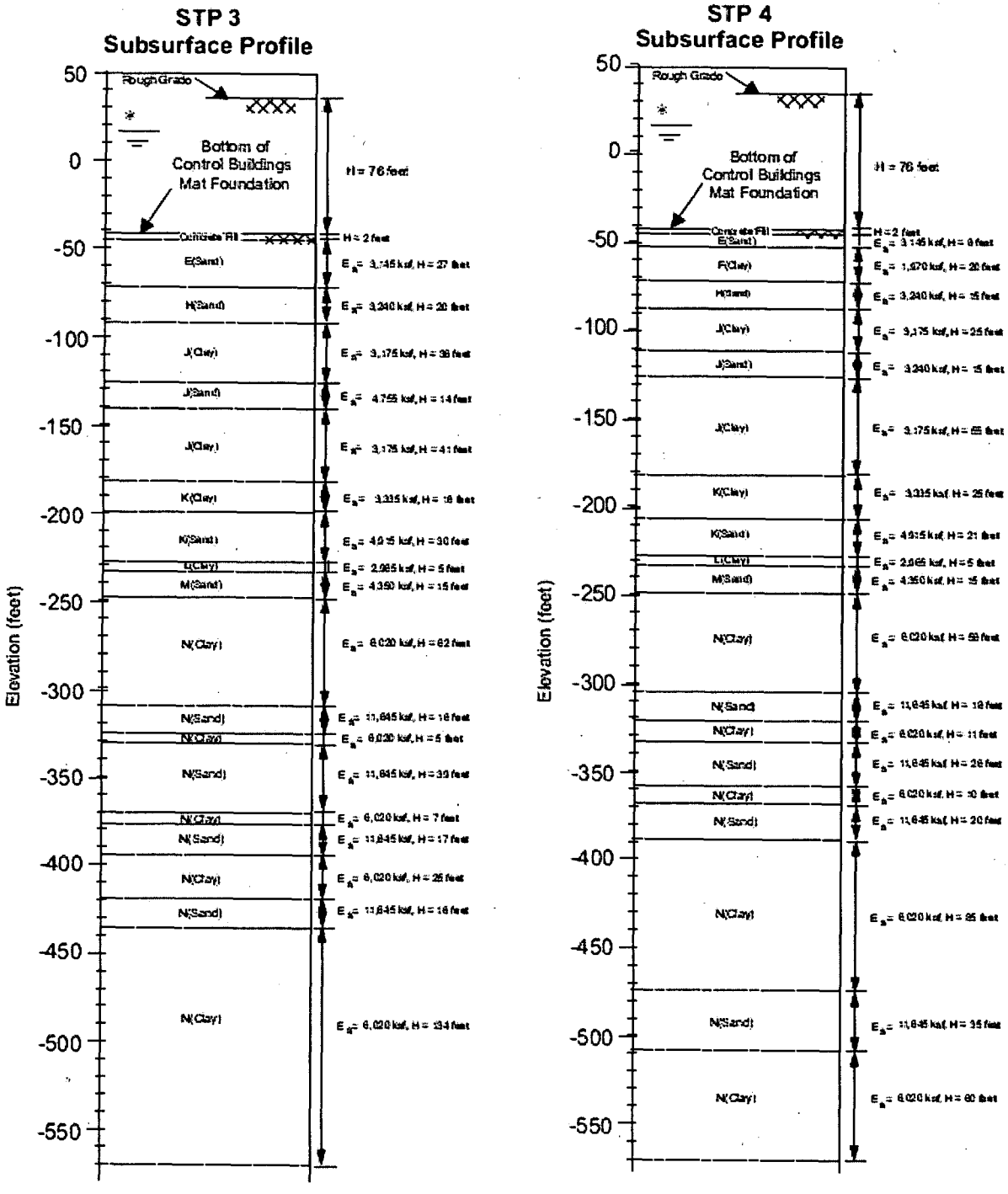

Figure 2.5S.4-~~68~~72 Adopted Subsurface profiles for the STP 3 & 4 Control Buildings

This Figure was renumbered and replaced in its entirety.

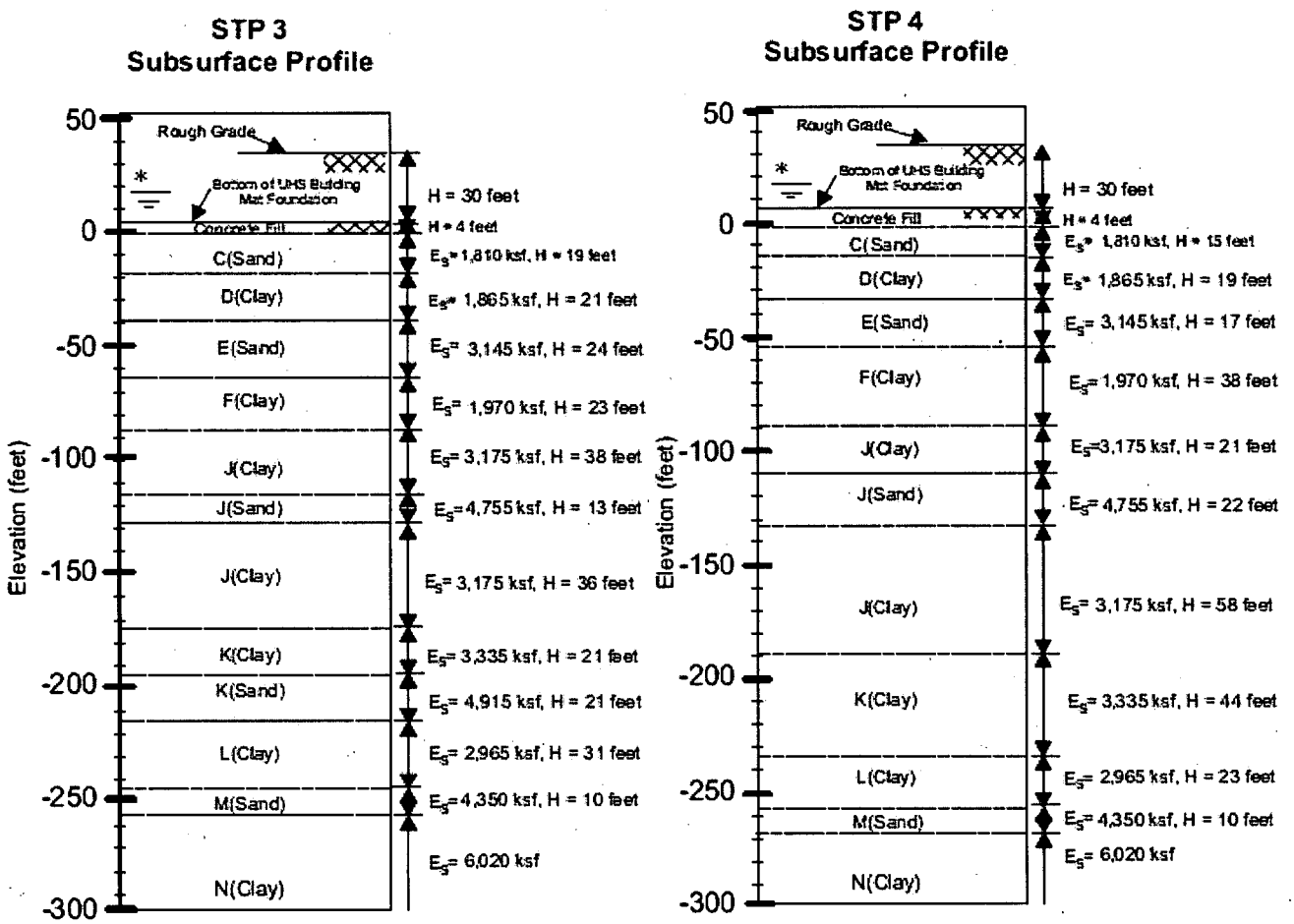

Figure 2.5S.4-~~70~~74 Adopted Subsurface profiles for the STP 3 & 4 UHS Basins

This figure was added to support the data for the RSW Pump Houses.

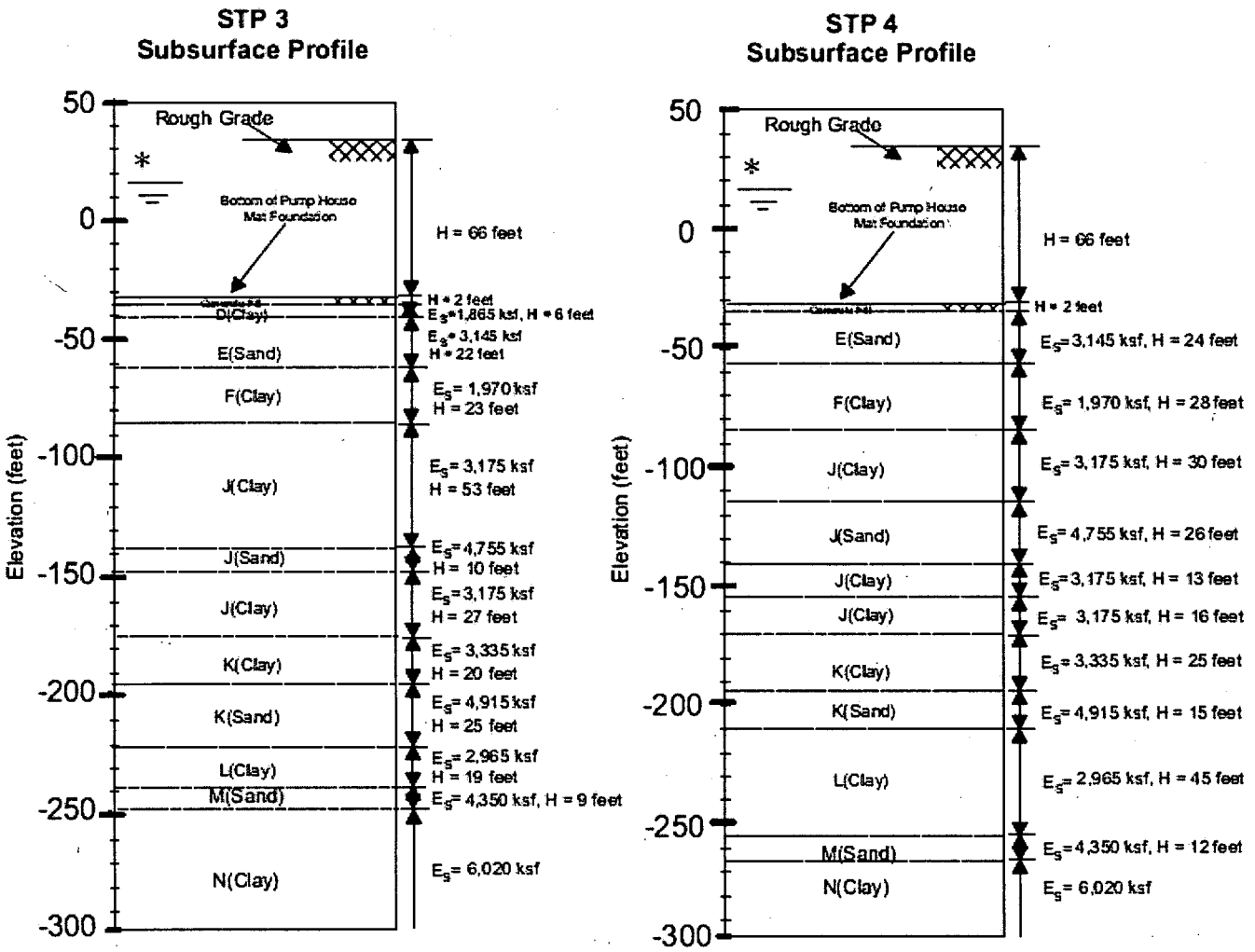

Figure 2.5S.4-74A Adopted Subsurface Profiles for the STP 3 & 4 RSW Pump Houses

This figure was added to support the data for the RSW Tunnels.

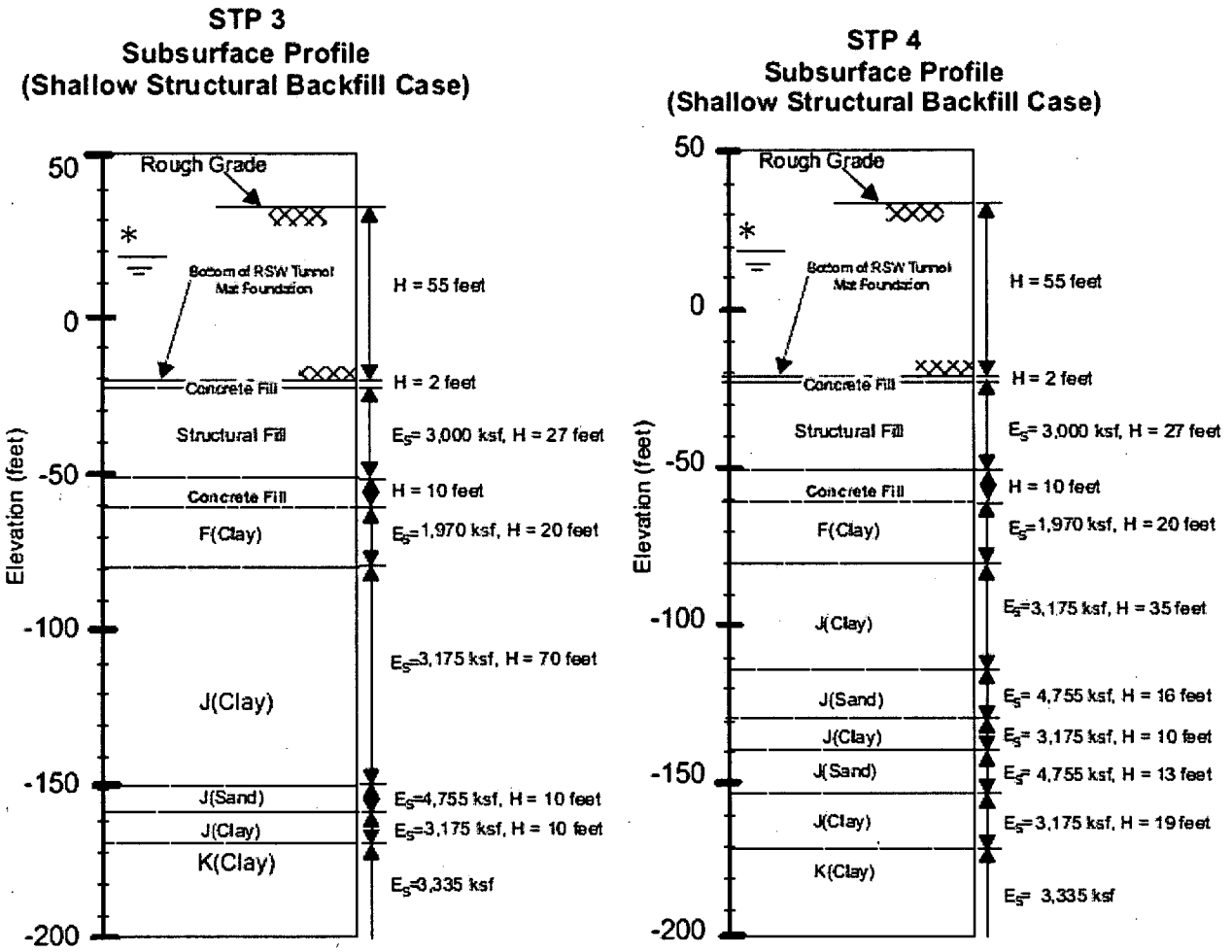

Figure 2.5S.4-74B Adopted Subsurface Profiles for the STP 3 & 4 RSW Tunnels

This figure was added to support the data for the Diesel Generator Fuel Oil Storage Vault (No.1 of 3).

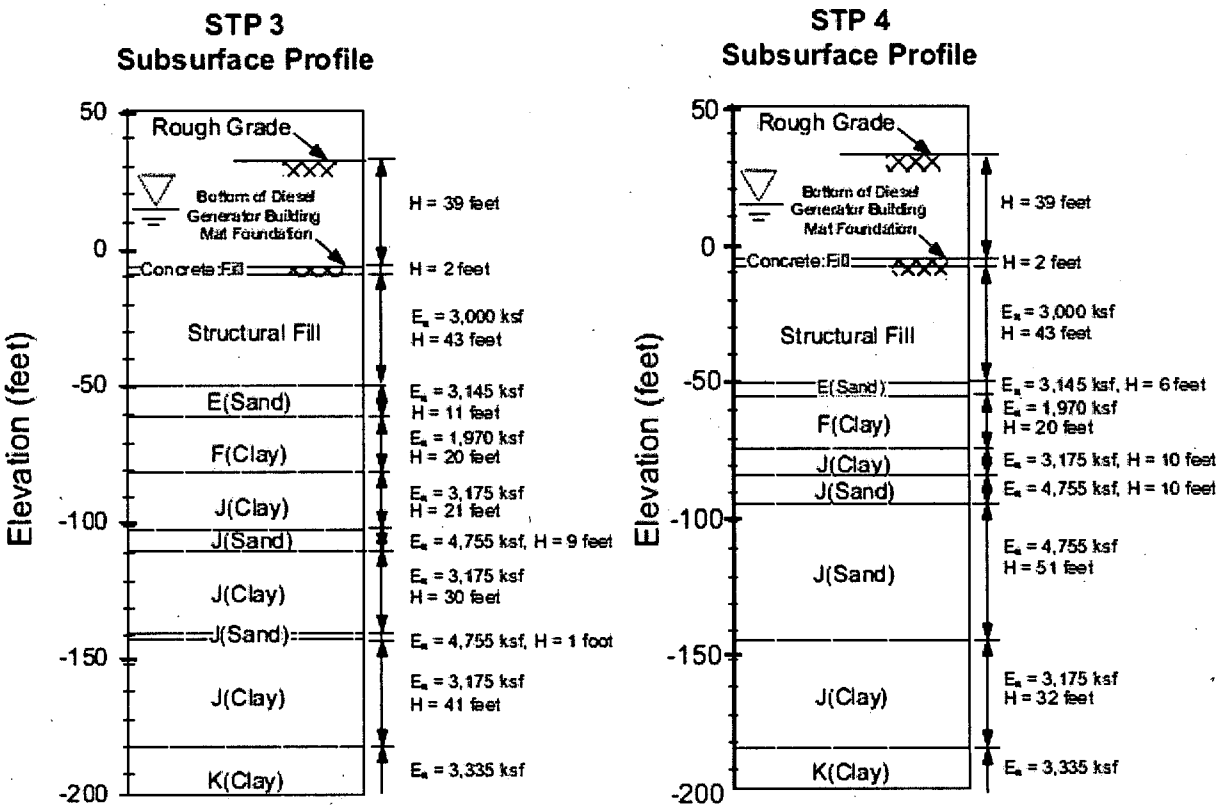

Figure 2.5S.4-74C Adopted Subsurface Profiles for the STP 3 & 4 Diesel Generator Fuel Oil Storage Vaults (No. 1 of 3)

This figure was added to support the data for the Diesel Generator Fuel Oil Storage Vault (No.2 of 3).

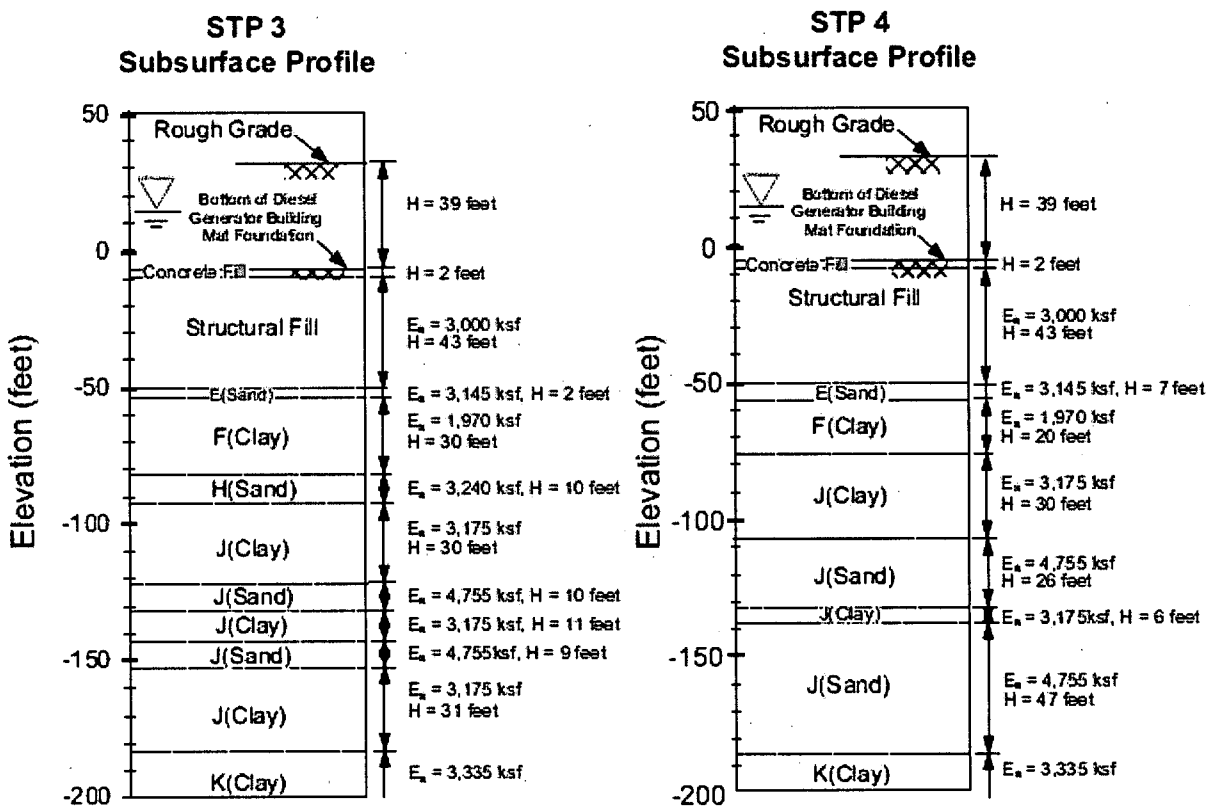

Figure 2.5S.4-74C Adopted Subsurface Profiles for the STP 3 & 4 Diesel Generator Fuel Oil Storage Vaults (No. 2 of 3)

This figure was added to support the data for the Diesel Generator Fuel Oil Storage Vault (No.3 of 3).

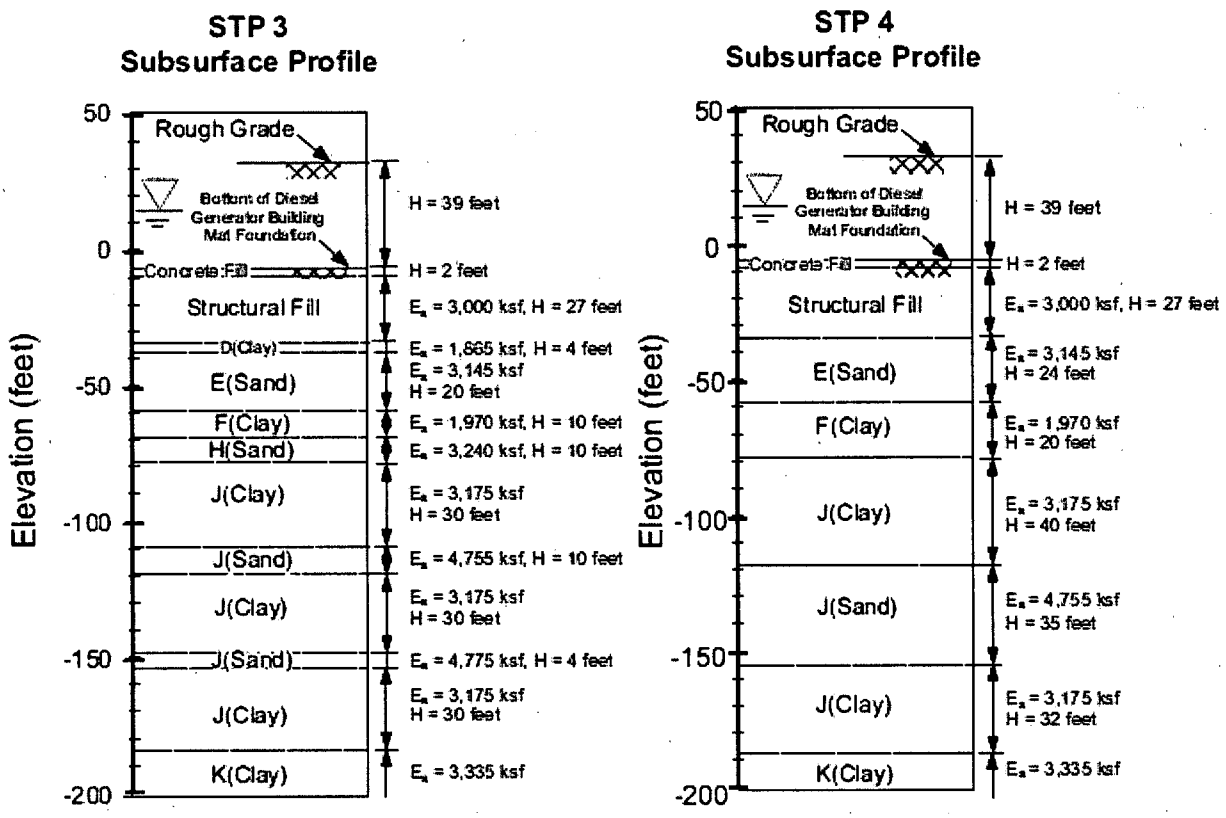

Figure 2.5S.4-74C Adopted Subsurface Profiles for the STP 3 & 4 Diesel Generator Fuel Oil Storage Vaults (No. 3 of 3)

This figure was renumbered.

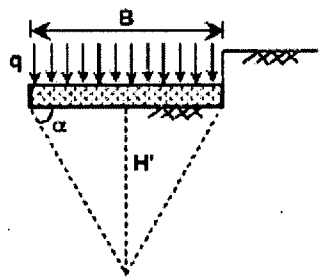

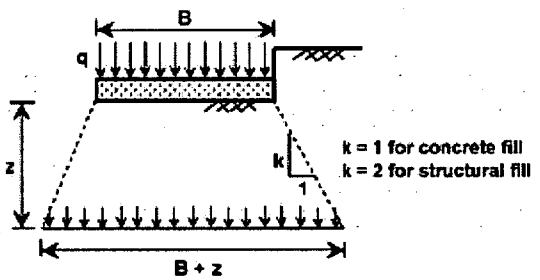

Figure 2.5S.4-~~71~~75 Nomenclature for Foundation Wedge and Pressure Distribution Diagrams

This figure was renumbered.

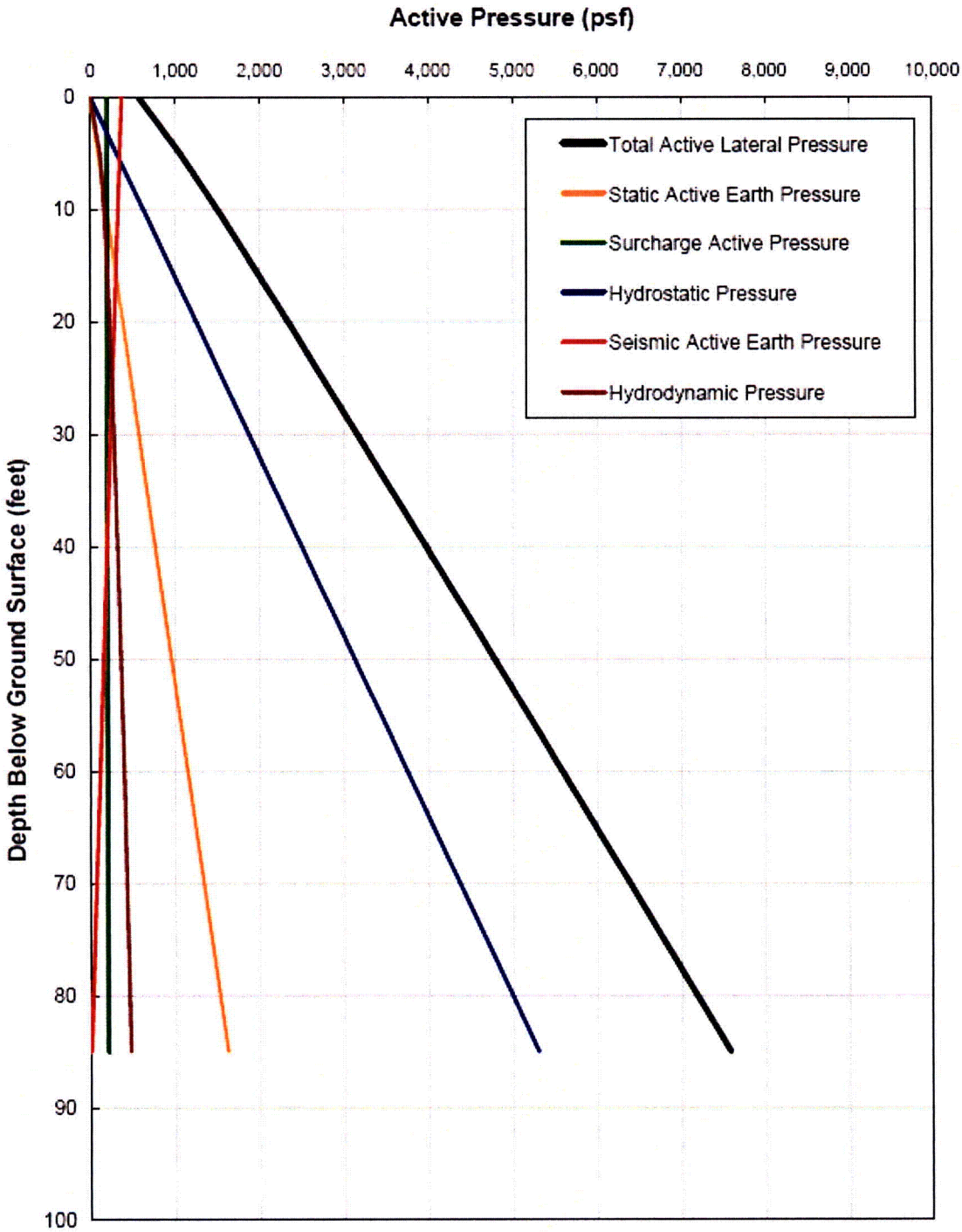

Figure 2.5S.4-~~72~~ 76 Sample Active Lateral Earth Pressure Diagrams

This figure was renumbered.

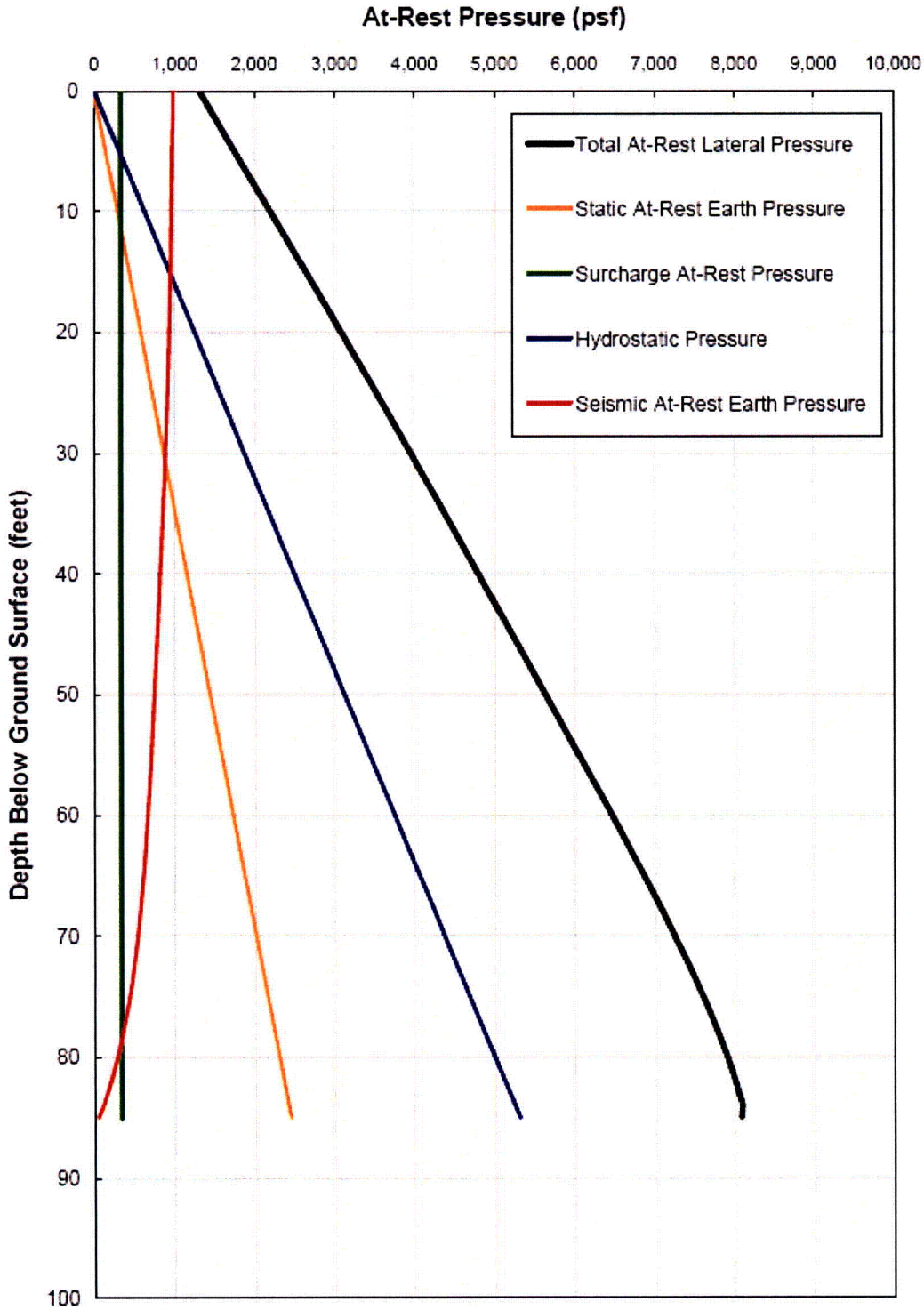

Figure 2.5S.4-~~73~~ 77 Sample At-Rest Lateral Earth Pressure Diagrams

Section 2.5S.4.11 has been updated as follows:

2.5S.4.11 Design Criteria

Geotechnical criteria employed in the evaluation of each topic are addressed in the respective subsections, above, for the particular issue under consideration. The criteria summarized below are geotechnical criteria and also geotechnical-related criteria that pertain to structural design.

Subsection 2.5S.4.8 uses an FOS against liquefaction for the site soils. Under "Factor of Safety Against Liquefaction," Reference 2.5S.4-52 indicates that FOS < 1.10 is generally considered a trigger value, FOS≈1.10 to 1.40 is considered intermediate, and FOS≥1.40 is considered high. As used in Subsection 2.5S.4.8, an FOS of 1.10 was considered a threshold value to evaluate the potential effects of liquefaction of site soils. On this same issue, the Committee on Earthquake Engineering of the National Research Council (Reference 2.5S.4-53) stated that "There is no general agreement on the appropriate margin (factor) of safety, primarily because the degree of conservatism thought desirable at this point depends upon the extent of the conservatism already introduced in assigning the design earthquake. If the design earthquake ground motion is regarded as reasonable, a safety factor of 1.33 to 1.35 [...] is suggested as adequate. However, when the design ground motion is excessively conservative, engineers are content with a safety factor only slightly in excess of unity." This position, and the FOS < 1.10 trigger value from Reference 2.5S.4-52, is consistent with the value selected for the analyses of STP 3 & 4 site soils, also considering the conservatism employed in ignoring overconsolidation, the geologic age of the deposits, and other factors noted above.

Subsection 2.5S.4.10 specifies and discusses allowable bearing capacity and settlement values for site soils and for planned Seismic Category I structures. Mat foundations will be used for all Seismic Category I structures. Table 2.5S.4-~~41b~~ 42B provides ~~allowable bearing capacities~~ ultimate bearing capacity and FOS for Seismic Category I structures. Generally, a minimum FOS=3.0 was used when applying ultimate bearing capacity equations when static loading conditions apply. This FOS can also be applied against breakout failure due to uplift forces on buried piping. This FOS can be reduced to ~~2.25~~ 1.5 when dynamic or transient loading conditions apply (Reference 2.5S.4-69). Table 2.5S.4-~~42~~ 47 shows estimated structure total settlements under ~~assumed~~ the stated foundation loads. As a guideline, if total and differential settlements are limited to 3 inches (up to 5 inches) and 1.5 inches, respectively, for mat foundations (and angular distortions/tilts do not exceed 1/300, or 1/750 for foundations supporting sensitive machinery), then settlements do not impact foundation performance. Higher total settlements such as calculated for the STP 3 & 4 Reactor Buildings can be accommodated when critical connections to adjacent structures, utilities, and paving ~~can be~~ are delayed. ~~Similarly as a guideline, if total and differential settlements are limited to 1 inch and 0.5 inches, respectively, for footing foundations, then settlement do not impact foundation performance.~~

Subsection 2.5S.4.10 also addresses criteria for static and seismic earth pressure estimation. The lateral earth pressure diagrams are shown on Figures 2.5S.4-72 and 2.5S.4-73, are best estimates, and thus have a FOS=1.0. A FOS=1.1 should be used in the analyses of sliding and overturning due to these lateral loads when the seismic component is included. No pile or pier foundations are planned for the Seismic

Category I structures. There may be situations where such foundations are used for non-Seismic Category I, as determined at project detailed design stage. For axial pile and pier design capacity, a FOS=3.0 is used for the end bearing component, and a FOS=2.0 is used for skin friction. For lateral loading, the maximum allowable lateral load is taken as one-half of the load that produces 1 inch of lateral movement on the head of the pile, adjusted for pile spacing and for pile head fixity. Subsection 2.5S.5.2 specifies and discusses the minimum acceptable static and seismic factors of safety for slopes, where such occur in the permanent STP 3 & 4 development.

Section 2.5S.4.13, References, has been updated as follows:

2.5S.4-2 "Results of ~~Geotechnical~~ Subsurface Investigation ~~Data Report (Revision No. 1), Combined Operating License Application (COLA) Project~~ and Laboratory Testing, South Texas Project Units 3 and 4 ~~(STP)~~," compact disk Report by MACTEC Engineering and Consulting, Inc., April 2007.

2.5S.4-2A "Results of Subsurface Investigation and Laboratory Testing, South Texas Project Units 3 and 4," hardcopy Report by MACTEC Engineering and Consulting, Inc., April 2007.

2.5S.4-2B "Results of Subsurface Investigation and Laboratory Testing, South Texas Project Units 3 and 4," Report by MACTEC Engineering and Consulting, Inc., July 2008.

2.5S.4-2C "Results of Subsurface Investigation and Laboratory Testing (Revision No. 1), South Texas Project Units 3 and 4," Report by MACTEC Engineering and Consulting, Inc., December 2008.

2.5S.4-5A "Recommended Procedures for Implementation of DMG Special Publication 117 Guidelines for Analyzing and Mitigating Liquefaction Hazards in California," Organized through the Southern California Earthquake Center, University of Southern California Implementation Committee. G.R. Martin and M. Lew Co-chairs and Editors, Committee Members K. Arulmoli, J.I. Baez, T.F. Blake, J. Earnest, F. Gharib, J. Goldhammer, D. Hsu, S. Kupferman, J. O'Tousa, C.R. Real, W. Reeder, E. Simantob, and T.L. Youd, March, 1999.

2.5S.4-5B Youd, T. L. and Idriss, I.M., editors. "Proceedings of the NCEER Workshop on Evaluation of Liquefaction Resistance of Soils", NCEER-97-0022, December 31, 1997.

2.5S.4-5C Andrus, R.D., Stokoe, K.H. II, 2000, "Liquefaction Resistance of Soils From Shear-Wave Velocity," Journal of Geotechnical and Geoenvironmental Engineering, November, pp. 1015-1025.

2.5S.4-7 "Soil Mechanics in Engineering Practice," Third Edition, Terzaghi, Karl, Peck, Ralph B. and Mesri, Gholamrezi, 1996. ~~"Subsurface Explorations and Sampling," Chapter 1 in Foundation Engineering Handbook, edited by Winterkorn, H.F. and Fang, H.Y., pp. 1-66, Lowe III, J. and Zaccheo, P.F., 1975.~~

2.5S.4-10A "Evaluation of Soil and Rock Properties," Federal Highway Administration (FHWA), GEOTECHNICAL ENGINEERING CIRCULAR NO. 5, GeoSyntec Consultants, Inc., April 2002.

2.5S.4-14 "Foundation Analysis and Design, (4th edition)," Bowles, J.E., 1988 ~~1996~~.

2.5S.4-14A "Geotechnical Characterization of Dessicated Clay," American Society of Civil Engineers (ASCE), Journal of Geotechnical Engineering, Volume 109, No. 1, pp. 56-71, Mahar, Larry J. and O'Neil, Michael, January 1983.

2.5S.4-14B "Pile Foundation Analysis and Design" (Series in Geotechnical Engineering), pp. 102-103, Poulos, H.G., and Davis, E.H., John Wiley & Sons, Inc.,

2.5S.4-55 "Foundation Analysis and Design, (5th edition)," Bowles, J. E., 1996 ~~1997~~.

2.5S.4-57A "Discussion of Foundation Uniform Pressure and Soil-Structure Interaction," American Society of Civil Engineers (ASCE), Journal of Geotechnical and Geoenvironmental Engineering, Volume 121, No. 12, p. 912, Li, K.S., December 1995.

2.5S.4-63 "Recommended Provisions for Seismic Regulations for New Buildings and other Structures," 2000 Edition, ~~FeredalFederal~~ Emergency Management Agency (FEMA) 369, National Earthquake Hazards Reduction Program (NEHRP), 2001.

2.5S.4-65 ~~Reserved for future use.~~ "Effect of Soil Plasticity on Cyclic Response," Journal of Geotechnical Engineering, ASCE, Vol. 117, No. 1, Vucetic, M. and Dobry, R., January, 1991.

2.5S.4-66 ~~2.5S.4-66~~ "US Army Corp of Engineers Slope Stability", Engineering Manual 2003.

2.5S.4-67 ~~2.5S.4-67~~ GSTABL7© with STEDwin© software, "Slope Stability Analysis System" version 2.004, June 2003 by Garry H. Gregory, P.E.

2.5S.4-68 ~~2.5S.4-68~~ Technical Paper No. 40, Charts provided by the U.S. Department of Commerce.

2.5S.4-69 "Structural Analysis and Design of Nuclear Plant Structures," Prepared by Editing Board and Task Groups of the Committee on Nuclear Structures and Materials of the Structural Division of the American Society of Civil Engineers, 1980. (Table 7.4, Summary of typical safety margins used in foundation design of safety class structures).