**TABLE OF CONTENTS**


2.0 DESCRIPTION OF NEW GENERATING STATION ..... 1
2.1 LOCATION AND LAYOUT OF THE GENERATING STATION ..... 1
2.2 DESIGN FEATURES OF U.S. EVOLUTIONARY POWER REACTOR ..... 3
2.3 OPERATIONAL FEATURES AND CAPACITY FACTORS ..... 5
2.3.1 Water Supply System ..... 5
2.3.2 Water Treatment Systems ..... 9
2.3.2.1 Circulating Water Treatment System ..... 10
2.3.2.2 Essential Service Water System Cooling Tower Water Treatment System ..... 10
2.3.2.3 Demineralized Water Treatment System ..... 10
2.3.2.4 Drinking Water Treatment System ..... 10
2.3.2.5 Liquid Waste Storage System and Liquid Waste Processing System ..... 11
2.3.2.6 Waste Water Treatment Plant ..... 11
2.3.3 Cooling Systems ..... 11
2.3.3.1 Circulating Water Supply System/Auxiliary Cooling Water Systems ..... 11
2.3.3.2 Essential Service Water System/Ultimate Heat Sink ..... 12
2.3.4 Radioactive Waste Systems ..... 14
2.3.5 Non-Radioactive Waste Systems ..... 15
2.3.5.1 Waste Systems for Effluents Containing Chemicals or Biocides ..... 15
2.3.5.2 Sanitary System ..... 15
2.3.5.3 Other Waste Treatment Systems ..... 16
2.3.6 Radioactive Waste ..... 19
2.3.6.1 Radioactive Materials Transportation Systems ..... 19
2.3.6.2 Temporary Storage and Disposal of Radioactive Waste ..... 19
2.4 DETAILED SCHEDULE FOR ENGINEERING, CONSTRUCTION AND OPERATION ..... 19
2.5 SITE SELECTION ..... 19
2.5.1 Further Justification for Site Selection of the South Parcel ..... 20
2.5.2 Water Intake and Discharge Systems ..... 20
2.5.2.1 Intake System ..... 20
2.5.2.2 Discharge System ..... 22
2.5.2.3 Water Supply (Makeup Water System) ..... 22
2.6 ECONOMIC IMPACT OF PROJECT ON STATE ..... 22
2.7 IMPACT OF PROJECT ON STABILITY AND RELIABILITY OF ELECTRIC SYSTEM ..... 23
2.8 LOCATION AND DESIGN FEATURES OF ELECTRIC SYSTEM UPGRADES ..... 23



© 2007 UniStar Nuclear Development, LLC. All rights reserved.
COPYRIGHT PROTECTED

## LIST OF TABLES

Table 2.3-1 Anticipated Water Use
Table 2.3-2 Minimum and Nominal Essential Service Water System Flows and Heat Loads at Different Operation Modes per Train

## LIST OF FIGURES

Figure 2.1-1 CCNPP Site Area Topographic Map

Figure 2.3-1 Anticipated Water Use Diagram
Figure 2.3-2 General Cooling System Flow Diagram for CCNPP Unit 3

Figure 2.5-1 Circulating Water Intake/Discharge Structure Location Plan
Figure 2.5-2 Plan View of Chesapeake Bay Intake System for CCNPP Unit 3
Figure 2.5-3 Section View of Chesapeake Bay Intake System for CCNPP Unit 3
Figure 2.5-4 View of New Discharge Outfall for Discharge System for CCNPP Unit 3


© 2007 UniStar Nuclear Development, LLC. All rights reserved.
COPYRIGHT PROTECTED

## 2.0 DESCRIPTION OF NEW GENERATING STATION

This section provides a description of the proposed new generating station and other information required by COMAR 20.79.03.01.

### 2.1 LOCATION AND LAYOUT OF THE GENERATING STATION (COMAR 20.79.03.01.A)

The proposed CCNPP Unit 3 will be located at the existing CCNPP site. The CCNPP site consists of 2,070 acres (838 hectares) in Calvert County, Maryland, on the west bank of the Chesapeake Bay, about 40 miles southeast of Washington, D.C. New plant structures for proposed Unit 3 will occupy approximately 281 acres (113.7 hectares) of the CCNPP site.

Figure 2.1-1 shows the proposed site layout for the CCNPP site including Unit 3. The CCNPP property contains two existing pressurized water reactors (PWR) designated as CCNPP Units 1 and 2. The proposed CCNPP Unit 3 will be located just south of the existing nuclear power plant within the CCNPP site.

Existing plant structures occupy approximately 220 acres (89 hectares), with most of the power block structures located near the east edge of the site, about at the center of the 10,000-ft (3,048 m) long CCNPP site shoreline. CCNPP Units 1 and 2 share a Turbine Building and other support structures. The Turbine Building is oriented parallel and adjacent to the shoreline of the Chesapeake Bay. The two Reactor Buildings and associated Auxiliary Buildings are located west of the Turbine Building. The Service Building, Intake Structure, and Discharge Structure are located east of the Turbine Building. An Independent Spent Fuel Storage Installation is located near the center of the property, west of the existing switchyard, which is west of the Reactor Buildings. The remainder of the property is mostly densely wooded areas. Access to the existing plant is via an onsite road that intersects Maryland State Highway 2/4 (MD 2/4) west of the site, or via the Chesapeake Bay by barge.

CCNPP Unit 3 will be separated from CCNPP Units 1 and 2 by a distance of approximately 2,500 ft (762 m). The CCNPP Unit 3 Reactor and Turbine Buildings will be located farther inland than Units 1 and 2 and at least 1,000 ft (304.8 m) from the shoreline. Due to its distance from and location relative to CCNPP Units 1 and 2, Unit 3 will have a separate protected area and construction access road. The Unit 3 access road will connect to MD 2/4 to the west and will be built south of the existing CCNPP Units 1 and 2 access road. After construction, primary access to Unit 3 will be via the existing Units 1 and 2 access road. The existing barge slip/heavy haul road will be extended to accommodate construction of CCNPP Unit 3.

The CCNPP Unit 3 Reactor Building and Turbine Building will be side by side, with the Reactor Building oriented toward the east. The Reactor Building will be surrounded by the Fuel Pool Building, four Safeguard Buildings, two EDG Buildings, the Reactor Auxiliary Building, the Radioactive Waste Processing Building, and the Access Building (collectively, the Power Block). Figure 2.1-1 shows the layout for CCNPP Unit 3, depicting the following features: exclusion area boundary (EAB), site boundary, liquid and gaseous release points (i.e., discharge piping and vent stack, ESWS Cooling Towers and CWS Cooling Tower, respectively) and their elevations and distances from the Reactor Building, meteorological towers, the construction zone, land to be cleared, waste disposal areas, and other buildings and structures both temporary (i.e., construction offices/warehouses) and permanent.

The CCNPP Unit 3 Reactor Building is an upright cylindrical concrete structure, capped with a spherical dome. The Reactor Building is 186 ft (56.7 m) in diameter with an overall height of 230 ft (70.1 m). The


© 2007 UniStar Nuclear Development, LLC. All rights reserved.
COPYRIGHT PROTECTED

plant grade for CCNPP Unit 3 will be at an elevation of approximately 85 ft (25.9 m). With the bottom of the Reactor Building foundation 40 ft (12.2 m) below grade, the new Reactor Building will rise 190 ft (57.9 m) above grade. The top of the Reactor Building will be at an elevation of approximately 275 ft (83.8 m).

The vent stack for CCNPP Unit 3 will be the tallest new structure at approximately 197 ft (60 m) above grade or about 7 ft (2.1 m) above the Reactor Building. In contrast to CCNPP Units 1 and 2, which use a once-through cooling system, CCNPP Unit 3 will have a closed-loop cooling system. The CCNPP Unit 3 Circulating Water Supply System (CWS) Cooling Tower will be a round concrete structure with an overall diameter of 528 ft (161 m) and approximate height of 164 ft (50 m). Similar to CCNPP Units 1 and 2, other CCNPP Unit 3 buildings will be concrete or steel with metal siding.

The CCNPP Unit 3 Ultimate Heat Sink (UHS) function will be provided by four mechanical forced draft Essential Service Water System (ESWS) cooling towers situated above storage basin pools. Each of the four pools will be approximately 0.19 acres (0.08 hectares) in size and will not occupy significant land area beyond the tower footprint. The pools will normally be supplied with makeup water from the non-safety-related CCNPP Unit 3 Desalination Plant.

In the event of a design basis accident, the ESWS pools will be supplied with water from a safety-related makeup water system using Chesapeake Bay water. The ESWS cooling towers will be 96 ft (29 m) tall. The Desalination Plant footprint will be approximately 65 ft by 165 ft (20 m x 50 m) and situated adjacent to and east of the CWS Cooling Tower. Bay water for the Desalination Plant will be taken from the CWS makeup line to the Cooling Tower.

Due to forested onsite areas, visual screening from outside the facility is provided by trees so that only the tops of the taller structures may be visible from adjacent properties at ground level. Because of the hybrid design of the CWS cooling tower, no water vapor plume will be visible. Many of the CCNPP Unit 3 buildings themselves will not be visible because the taller structures will mask the lower rise structures. Due to onsite elevation changes, topographical features will also help to screen and seclude plant structures from surrounding properties even when foliage is seasonally absent. In addition, since CCNPP Unit 3 will be located approximately 3,000 to 4,000 ft (914.4 to 1,219.2 m) from the nearest residential properties, distance will help shield the plant from view.

From the east, considering that the approximate 2-mi (3.2 km) long shoreline bordering the CCNPP property comprises steep cliffs with little beach area, views of the new plant should be limited due to elevation differences, forested borders, and the approximately 1,000-ft (304.8 m) setback. Construction of the heavy haul road, related heavy equipment staging area and new water intake structure will require removal of a portion of the cliff area near Units 1 and 2 causing those facilities to be exposed to a wider field of view from the Chesapeake Bay. The Intake Structure and Pump House and associated discharge piping at the shoreline for CCNPP Unit 3 should have minimal visual impact considering their proposed locations near the CCNPP Units 1 and 2 intake structure and barge slip facility, respectively. No other structures will be visible from nearby ground-level vantage points.

Aesthetic principles and concepts used in the design and layout of CCNPP Unit 3 include the following:

- Woodlands on site have been avoided as much as possible.
- Selecting the southern portion of the CCNPP property, where natural valleys exist, for the location of the new power block structures. This area will provide a low profile for the


© 2007 UniStar Nuclear Development, LLC. All rights reserved.
COPYRIGHT PROTECTED

new plant and should require less excavation for site preparation and clearing due to pre-existing, cleared areas around Camp Conoy.

- Utilizing a hybrid cooling tower with a plume abatement system to minimize visible vapor plume.

- Locating most of the plant structures beyond the 1,000 ft (304.8 m) CBCA, although security perimeter fencing, gravel path, water intake and discharge structures, and heavy haul road and construction staging area will be constructed in the CBCA.

- Placing the Intake Structure and Pump House and associated discharge piping in the existing, developed section of shoreline.

- Constructing buildings similar in shape, size and material to existing buildings.

- Utilizing cooling systems that minimize environmental impacts.

- Minimizing tree removal by locating the construction lay-down areas, parking areas and construction offices and warehouses in pre-existing dredge spoil areas, cleared fields or lightly forested areas where practical.

- Upgrading existing onsite roads as applicable to minimize the addition of new roads. However, proposed new service roads will provide direct routes to CCNPP Unit 3 for construction and are necessary to minimize disruption of CCNPP Units 1 and 2 traffic patterns.

In addition to the above, exterior finishes for plant buildings will be similar in color and texture to those of the CCNPP Units 1 and 2 buildings. This provides for a consistent appearance by architecturally integrating the buildings on the CCNPP site. Areas that are cleared to support construction activities will be either maintained by reseeding or restored by replanting with native trees and vegetation, so that the CCNPP Unit 3 landscape blends with the CCNPP Units 1 and 2 landscape and the remaining undisturbed areas on the CCNPP site.

## 2.2 DESIGN FEATURES OF U.S. EVOLUTIONARY POWER REACTOR (COMAR 20.79.03.01.B)

CCNPP Unit 3 will be the AREVA advanced reactor, the U.S. Evolutionary Power Reactor (U.S. EPR). The U.S. EPR design has a rated core thermal power of 4,590 MWt. The rated and design gross electrical output for the U.S. EPR is approximately 1,710 MWe. Electrical power consumption for auxiliary loads is approximately 130 MW. Although the U.S. EPR is expected to be licensed for 40 years, the designed operating life of the U.S. EPR is 60 years. The U.S. EPR is designed to operate with a capacity factor of 95% (annualized), considering scheduled outages and other plant maintenance.

The U.S. EPR design is a four-loop, pressurized water reactor, with a Reactor Coolant System (RCS) composed of a reactor pressure vessel that contains the fuel assemblies, a pressurizer including ancillary systems to maintain system pressure, one reactor coolant pump per loop, one steam generator per loop, associated piping, and related control systems and protection systems. Figure 1.2-1 provides a simplified depiction of the reactor power conversion system for the U.S. EPR.


© 2007 UniStar Nuclear Development, LLC. All rights reserved.
COPYRIGHT PROTECTED

The RCS transfers the heat generated in the reactor core to the steam generators where steam is produced to drive the turbine generator. Pressurized water is used to remove the heat from inside the reactor core. The reactor coolant pumps circulate water through the RCS, and a pressurizer, connected to one of the four loops, maintains the pressure within a specified range. Each of the four coolant loops includes a hot leg from the reactor pressure vessel to a steam generator, a cross-over leg from the steam generator to a reactor coolant pump, and a cold leg from the reactor coolant pump to the reactor pressure vessel.

In each of the four loops, the primary water leaving the reactor pressure vessel through an outlet nozzle goes to a steam generator. The primary water flows inside the steam generator tube bundle and transfers heat to the secondary water creating steam. The primary water then goes to a reactor coolant pump before returning to the reactor pressure vessel through an inlet nozzle. The feedwater entering the secondary side of the steam generators absorbs the heat transferred from the primary side and produces saturated steam. The steam is dried in the steam generators then routed to drive the turbine. The steam is then condensed and returns as feedwater to the steam generators.

The U.S. EPR reactor core consists of 241 fuel assemblies. The fuel assembly structure supports the fuel rod bundles. Inside the assembly, the fuel rods are vertically arranged according to a square lattice with a 17x17 array. There are 265 fuel rods per assembly with the remaining locations used for control rods or instrumentation. The fuel rods are composed of enriched uranium dioxide sintered pellets contained in a cladding tube made of M5 advanced zirconium alloy. Discharge burnups for equilibrium cores are approximately between 45,000 MWd/MTU to 59,000 MWd/MTU (Megawatt days per Metric Ton Uranium). The batch average discharge burnups for equilibrium cores is about 52,000 MWd/MTU.

Engineered safety features for the U.S. EPR are designed to directly mitigate the consequences of a design basis accident (DBA) and include the following systems and functions:

- Containment - provided to contain radioactivity following a loss of coolant accident (LOCA).
- Containment heat removal - associated with the reduction of energy from the containment after a DBA.
- Containment isolation and leakage testing - provided to minimize leakage from the containment.
- Combustible gas control - configured to reduce hydrogen concentrations in order to maintain containment integrity during and immediately following a DBA/LOCA.
- Safety injection - designed to provide the emergency core cooling function.
- Control room habitability - designed so that control room occupants can remain in the control room to operate the plant safely under normal and accident conditions.
- Fission product removal and control systems - configured to reduce or limit the release of fission products following a postulated DBA, severe accident or fuel handling accident.
- Emergency heating, ventilation and air conditioning and filtration - provided to reduce radioiodine released as assumed during design basis events.


© 2007 UniStar Nuclear Development, LLC. All rights reserved.
COPYRIGHT PROTECTED

- Emergency feedwater - designed to supply water to the steam generators following the loss of normal feedwater supplies.

The U.S. EPR utilizes a standard nuclear steam turbine arrangement consisting of a tandem compound steam turbine operating at 1,800 revolutions per minute. The generator is an alternating current, synchronous type, with a hydrogen cooled rotor and water cooled stator. The main condenser condenses the steam exhausted from the three low pressure turbine elements, with titanium tubes and tubesheet overlay. The condenser heat transfer area for all three shells is estimated to be approximately 1.6 million $ft^2$ (149 thousand $m^2$).

For 100% unit load, at the average plant back pressure of 2.5 inches HgA (84.7 mbar), the anticipated turbine heat rate is approximately 9,200 BTU/kW-hr.

Circulating water for the U.S. EPR is cooled by a closed-loop, mechanical draft cooling tower. Waste heat rejected to the atmosphere via the cooling tower is 3,238 MWt, resulting in an overall thermal efficiency of approximately 29%.

## 2.3 OPERATIONAL FEATURES AND CAPACITY FACTORS
(COMAR 20.79.03.01.C)

The previous subsection provided design and operational information for the U.S. EPR that will be used for CCNPP Unit 3. Linear facilities include the following systems:

- water supply system,
- water treatment system,
- cooling system,
- radioactive waste systems,
- non-radioactive waste systems, and
- radioactive materials transportation systems.

This subsection describes the features of the linear facilities that will support reactor operation.

### 2.3.1 Water Supply System

CCNPP Unit 3 requires water for cooling and operational uses. Figure 2.3-1 and Table 2.3-1 quantitatively illustrate the average and maximum water flows to and from various plant systems for normal plant operating conditions and normal shutdown/cooldown conditions, respectively. Some of the water demand values in Figure 2.3-1 and Table 2.3-1 are bounding values which will likely be reduced as detailed design work progresses. Flow rates for other plant modes are not applicable because there is no change in demand during startup or refueling operating conditions. The average flows represent continuous plant water usage requirements whereas the maximum flows represent intermittent demands.

Water use by non-plant facilities includes potable and sanitary needs for administrative buildings and warehouses, and water required for landscaping maintenance. Potable water demand is based on projected staffing during normal plant operation. Other station water users, as noted above, have not been


© 2007 UniStar Nuclear Development, LLC. All rights reserved.
COPYRIGHT PROTECTED

included in the estimated demand. However, water stored in the raw water storage tanks is expected to meet the needs of non-plant facilities since the tanks were designed for peak load provisions.

Primary water consumption is for turbine condenser cooling. Cooling water for the turbine condenser and closed cooling heat exchanger for normal plant operating conditions is provided by the CWS, which is a non-safety-related interface system. Circulating water for condenser heat dissipation is taken from the Chesapeake Bay and will normally be withdrawn at an average rate of 34,748 gpm (131,535 lpm). A small fraction of the intake water will be used to clean debris from the traveling water screens. The CWS discharges the heated water from the condenser to the CWS cooling tower. In the closed-loop CWS cooling tower, approximately half of the water will be lost to the atmosphere as evaporation and the other half will be released as blowdown. Therefore, the average monthly consumptive use of Chesapeake Bay water during normal operating conditions will be approximately 750 million (7.5 E+08) gallons per month (2.84 E+09 liters per month). During normal shutdown/cooldown conditions, the maximum flow of water required by the CWS will be 40,440 gpm (153,082 lpm).

Four additional mechanical draft cooling towers with water storage basins (i.e., one basin for each of the four trains) comprise the UHS, which functions to dissipate heat rejected from the ESWS. The ESWS is vital for all phases of plant operation and is designed to provide cooling water during power operation and shutdown of the plant. Under normal operating and normal shutdown/cooldown conditions, the ESWS cooling tower water storage basins will be supplied with non-safety-related makeup water pumped from the Desalination Plant at an average rate of 1,882 gpm (7,124 lpm). The Desalination Plant will utilize seawater reverse osmosis technology. A membrane filtration system will pre-treat feed to the reverse osmosis equipment. The makeup water serves to replenish water losses due to cooling tower evaporation and drift at a rate of 940 gpm (3,558 lpm) and 2 gpm (8 lpm), respectively. The remaining water is released to the Chesapeake Bay as ESWS cooling tower blowdown at an average rate of 940 gpm (3,558 lpm). For normal operation, monthly desalinated water consumption will average approximately 41 million (4.1 E+07) gallons per month (1.5 E+08 liters per month). Consumptive rates should not vary during dry periods.

During normal plant shutdown/cooldown, when all four trains of the ESWS are operating and assuming a maximum makeup flow rate of 941 gpm (3,562 lpm) for each ESWS cooling tower, the peak water demand will be 3,764 gpm (14,248 lpm). The maximum water flow will be provided by the Desalination Plant and from water stored in the ESWS cooling tower storage basins. Peak water demand for normal plant shutdown/cooldown will only be for a short period of time. Any supply shortfall resulting from peak demand can be made up by stored water from several on-site storage tanks.

The ESWS cooling towers are connected to the remainder of the ESWS through intake and discharge paths. The ESWS takes water from the ESWS cooling tower basins and cools the Component Cooling Water System (CCWS) heat exchangers. The CCWS is a closed-loop cooling water system that in conjunction with the ESWS provides a means to cool the reactor core, removing heat generated from plant essential and non-essential components connected to the CCWS.

During a design basis accident, Chesapeake Bay water will provide safety-related makeup water for the four ESWS cooling towers at a consumptive rate of up to 471 gpm (1,783 lpm) for each ESWS cooling tower (minimum of two) operating during an accident. However, since the consumptive rate for accidents is not associated with normal modes of plant operation, this rate is not shown on the water use diagram, Figure 2.3-1.

Sustained desalinated water demand for power plant makeup is 103 gpm (390 lpm) and includes water supplies for the Demineralized Water Distribution System, the Potable and Sanitary Water Distribution


© 2007 UniStar Nuclear Development, LLC. All rights reserved.
COPYRIGHT PROTECTED

System and the Fire Water Distribution System. The Demineralized Water Distribution System produces and delivers demineralized water to the power plant for systems that need high quality, non-safety makeup water. Except for containment isolation, the Demineralized Water Distribution System interfaces are non-safety-related. Under normal system operation, water consumption by the Demineralized Water Distribution System is 80 gpm (303 lpm). During normal shutdown/cooldown conditions, water consumption is also anticipated to be approximately 80 gpm (303 lpm). During normal plant operation, the Potable and Sanitary Water Distribution System supplies consumers with pre-treated water (i.e., Drinking Water Supply) at an average rate of 20 gpm (76 lpm). Due to potential surges in water demand, water consumption for the Potable and Sanitary Water Distribution System during normal shutdown/cooldown conditions is anticipated to be 36 gpm (136 lpm).

The system provides water for human consumption and sanitary cleaning purposes, and can be used by other systems as a water source. The Potable and Sanitary Water Distribution System is not connected with any radioactive source or other system that may contain substances harmful to the health of personnel. Failures in the Potable and Sanitary Water Distribution System will have no consequences on plant operation or safety functions. Similarly, the Fire Water Distribution System is classified as a non-safety system. It is required to remain functional following a plant accident, to provide water to hose stations in areas containing safe shutdown equipment. Water consumed by the Fire Water Distribution System during normal conditions is required to maintain system availability. The maximum consumptive rate accounts for system actuation. During normal operation, water consumed by the Fire Water Distribution System is due to system leakage and periodic testing. The maximum consumptive rate is based on meeting the National Fire Protection Association (NFPA)'s requirements for replenishing fire protection water storage.

Small volumes of aqueous wastes generated by CCNPP Unit 3 operations and sanitary waste treated by the Waste Water Treatment Plant are discharged at a combined average rate of 75gpm (284 lpm). Water consumption should not vary during drought conditions because the Chesapeake Bay provides water for the Desalination Plant. Also, there will be no high water limit due to storm surges. Maximum water flow required for power plant makeup during normal shutdown/cooldown conditions is 741 gpm (2,805 lpm).

Prior to discharge into the Chesapeake Bay, CWS cooling tower and ESWS cooling tower blowdown, and miscellaneous low volume waste are directed to the Waste Water Retention Basin. Wastes resulting from the Desalination Plant's membrane filtration and reverse osmosis equipment will also collect in the Waste Water Retention Basin. The Waste Water Retention Basin serves as an intermediate discharge reservoir. During plant startup, startup flushes and chemical cleaning wastes will first collect in temporary tanks or bladders, and will then be discharged into the Waste Water Retention Basin. Treated sanitary waste and liquid radwaste are discharged to the seal well, which is used to prevent wastewater backflow and is discharged into the Chesapeake Bay.

Total water demand from the Chesapeake Bay during normal operations is 37,778 gpm (143,043 lpm). From this total, 19,425 gpm (73,531 lpm) is returned to the Bay from the retention basin and 1 gpm (4 lpm) from treated liquid radwaste. The remaining 18,352 gpm (69,508 lpm) is evaporated in the CWS and ESWS cooling towers.


© 2007 UniStar Nuclear Development, LLC. All rights reserved.
COPYRIGHT PROTECTED

**Table 2.3-1 Maximum Anticipated Water Use**

| Water Streams | Average Flow [a] gpm (lpm) | Maximum Flow [b] gpm (lpm) |
|---|---|---|
| **Desalinated Water (Fresh Water) Demand** [c,d] | **3,040 (11,508 )** | **3,040 + [2,520] = 5,560 (11,508 + [9,539] = 21,047)** |
| Membrane Filtration | 276 (1,045) | 276 (1,045) |
| Reverse Osmosis | 2,764 (10,463) | 2,764 (10,463) |
| Reverse Osmosis Reject [e] | 779 (2,949) | 779 (2,949) |
| Essential Service Water System (ESWS)/Ultimate Heat Sink (UHS) Makeup [f] | 1,882 (7,124) | 1,244 + [2,520] =3,764 (4,709 + [9,539] = 14,248) |
| ESWS Cooling Tower Evaporation | 940 (3,558) | 1,880 (7,116) |
| ESWS Cooling Tower Drift | 2 (8) | 4 (16) |
| ESWS Cooling Tower Blowdown | 940 (3,558) | 1,880 (7,116) |
| Power Plant Makeup | 103 (390) | 741 (2,805) |
| Demineralized Water Distribution System | 80 (303) | 80 (303) |
| Potable and Sanitary Water Distribution System | 20 (76) | 36 (136) |
| Plant Users | 20 (76) | 36 (136) |
| Non-Plant Users [g] | 0 (0) | 0 (0) |
| Fire Water Distribution System [h] | 3 (11) | 625 (2,366) |
| **Chesapeake Bay Water Demand** | **37,788 (143,043)** | **43,480 (164,590)** |
| Desalination Plant | 3,040 (11,508) | 3,040 (11,508) |
| Circulating Water Supply System (CWS) | 34,748 (131,535) | 40,440 (153,082) |
| CWS Cooling Tower Evaporation | 17,354 (65,692 ) | 20,200 (76,465) |
| CWS Cooling Tower Drift [i] | 39 (148) | 39 (148) |
| CWS Cooling Tower Blowdown | 17,355 (65,695) | 20,201 (76,469) |
| **Effluent Discharge to Chesapeake Bay** | **19,426 (73,535)** | **23,228 (87,927)** |
| Waste Water Retention Basin Discharge | 19,425 ( 73,531) | 23,227 ( 87,923) |
| Miscellaneous Low Volume Waste | 55 (208) | 55 (208) |
| Treated Sanitary Waste | 20 (76) | 36 (136) |
| ESWS Cooling Tower Blowdown | 940 (3,558) | 1,880 (7,116) |
| CWS Cooling Tower Blowdown | 17,355 (65,695) | 20,201 (76,469) |
| Desalination Plant Waste | 1,055 (3,994) | 1,055 (3,994) |
| Membrane Filtration | 276 (1,045) | 276 (1,045) |
| Reverse Osmosis Reject [e] | 779 (2,949) | 779 (2,949) |
| Startup Temporary Storage Discharge [j] | --- | --- |
| Trash Screen Cleaning Water Discharge [j] | --- | --- |
| Treated Liquid Radwaste | 1 (4) | 1 (4) |

**Key:**
gpm – gallons per minute
lpm – liters per minute


© 2007 UniStar Nuclear Development, LLC. All rights reserved.
COPYRIGHT PROTECTED

**Notes for Table 2.3-1:**

a. Average flow represents the expected water consumptive rates and returns for normal plant operating conditions.

b. Maximum flow represents water consumptive rates and returns during normal shutdown/cooldown.

c. The source for fresh water is desalinated Chesapeake Bay water.

d. Maximum flow will be provided by the Desalination Plant (3,040 gpm/11,508 lpm) plus water stored in the ESWS cooling tower storage basins (2,520 gpm/9,539 lpm).

e. The Desalination Plant's demand of 3,040 gpm (11,508 lpm) is based on 40% recovery for its preliminary design. The corresponding production rate for reverse osmosis would be approximately 1,106 gpm (4,187 lpm). Reverse osmosis reject would be approximately 1,658 gpm (6,276 lpm), rather than the value of 779 gpm (2,949 lpm) used for balancing purposes. Referring to the above table, note that a production rate of 1,106 gpm (4,187 lpm) would be less than the makeup demand of 1882 gpm for the ESWS cooling towers. However, the makeup and evaporation demands for the ESWS cooling towers in the above table are bounding values; actual demands are anticipated to be less. Therefore, the flows will likely change during the detailed design phase. Also, the difference between actual demand and flow anticipated by reverse osmosis equipment will be accommodated by the raw water storage tank.

f. Two trains will be operating under normal conditions and four trains during shutdown/cooldown.

g. The average flow for potable water demand is based on projected staffing of 363 employees during normal plant operation. Non-plant water users include potable and sanitary needs for administrative buildings and warehouses, and water required for landscape maintenance. Non-plant water users are not included in the estimated demand; however, water stored in the raw water storage tank(s) should accommodate other station water users since it will be designed for peak load provisions.

h. During normal operating conditions, water consumed by the Fire Water Distribution System is attributed to system leakage and periodic testing. The maximum consumptive rate is based on meeting the National Fire Protection Association's requirement for replenishing fire protection water storage.

i. The average and maximum cooling tower drift losses are considered equivalent. The Co-Applicants have not yet determined percentage of the CWS flow rate that may be attributed to drift although it will likely not exceed the value shown here.

j. Startup effluents occur during plant startup; the effluents will be stored within tanks or bladders, which will be removed once startup is complete. Makeup flows associated with startup and trash screen cleaning are anticipated to be minimal. Similarly, discharges associated with startup effluents and trash screen cleaning effluents are also anticipated to be minimal.

### 2.3.2 Water Treatment Systems

Water treatment will be required for both influent and effluent water streams. Because the cooling water source for CCNPP Unit 3 is the same as that for CCNPP Units 1 and 2, cooling water treatment methodologies for CCNPP Unit 3 will be similar. However, because desalinated water will provide water for CCNPP Unit 3 operations, in lieu of groundwater used by CCNPP Units 1 and 2, fresh water treatment methodologies will differ between the two plants. As previously noted, the source of fresh water for CCNPP Unit 3 will be desalinated Bay water. Table 6.4-2 lists the principal water treatment


© 2007 UniStar Nuclear Development, LLC. All rights reserved.
COPYRIGHT PROTECTED

systems and treatment operating cycles. The types, quantities and points of chemical additives to be used for water treatment are also indicated.

#### 2.3.2.1 Circulating Water Treatment System

The Circulating Water Treatment System provides treated water for the CWS and consists of three phases: makeup treatment, internal circulating water treatment and blowdown treatment. Makeup treatment will consist of a biocide (i.e., sodium hypochlorite) injected into Chesapeake Bay water influent during spring, summer and fall months to minimize marine growth and control fouling on heat exchanger surfaces. Treatment will improve makeup water quality. Similar to CCNPP Units 1 and 2, an environmental permit to operate this treatment system will be obtained from the State of Maryland. For prevention of legionella, treatment for internal circulating water components (i.e., piping between the CWS Makeup Water Intake Structure and condensers) may utilize existing power industry control techniques consisting of hyperchlorination (chlorine shock) in combination with continuous or intermittent chlorination at lower levels and biocide and scale inhibitor addition. Blowdown treatment will depend on water chemistry, but is anticipated to include application of a biocide (i.e., sodium hypochlorite), dechlorination (i.e., sodium bisulfite) and scale inhibitor (i.e., dispersant) to control bio-growth, reduce residual chlorine, and protect against scaling, respectively. Because seawater has a tendency to foam due to the presence of organics, a small amount of antifoam may also be added to blowdown.

#### 2.3.2.2 Essential Service Water System Cooling Tower Water Treatment System

ESWS cooling tower water chemistry will be maintained by the ESWS Water Treatment System, which is a non-safety-related system designed to treat desalinated water for normal operating conditions and normal shutdown/cooldown. Treatment of system blowdown will also control the concentration of various chemicals in the ESWS cooling water. During design basis accident conditions, the ESWS Water Treatment System is assumed to be non-operational.

#### 2.3.2.3 Demineralized Water Treatment System

Desalinated water will be treated by the Demineralized Water Treatment System, which provides demineralized water to the Demineralized Water Distribution System. During normal operation, demineralized water is delivered to power plant systems. Treatment techniques will meet makeup water treatment standards set by the Electric Power Research Institute and include the addition of a corrosion inhibitor(s), similar to the Service Water System for CCNPP Units 1 and 2, which uses demineralized water.

#### 2.3.2.4 Drinking Water Treatment System

The Drinking Water Treatment System, which supplies water for the Potable and Sanitary Distribution System, will treat desalinated water so that it meets the State of Maryland's potable (drinking) water program and standards set by U.S. Environmental Protection Agency (EPA) for drinking water quality under the National Primary Drinking Water Act (NPDWA) and National Secondary Drinking Water Act (NSDWA). The system will be designed to function during normal operation and outages (i.e., shutdown). However, treatment of desalinated water for the Fire Water Distribution System is not anticipated.


© 2007 UniStar Nuclear Development, LLC. All rights reserved.
COPYRIGHT PROTECTED

#### 2.3.2.5 Liquid Waste Storage System and Liquid Waste Processing System

Liquid wastes generated by the plant during all modes of operation will be managed by the Liquid Waste Storage System and the Liquid Waste Processing System. The Liquid Waste Storage System collects and segregates incoming waste streams between radioactive and non-radioactive sources, provides initial chemical treatment of those wastes, and delivers them to one or another of the processing systems. The Liquid Waste Processing System separates waste waters from radioactive and chemical contaminants. The treated water is returned to the Liquid Waste Storage System for monitoring and eventual release. Chemicals used to treat waste water for both systems include sulfuric acid for reducing pH, sodium hydroxide for raising pH and an anti-foaming agent, complexing agent and/or precipitant for promoting settling of precipitates.

#### 2.3.2.6 Waste Water Treatment Plant

The Waste Water Treatment Plant System will be used to treat sewage for CCNPP Unit 3. This treatment system removes and processes raw sewage so that discharged effluent conforms to applicable local and state health and safety codes and environmental regulations. Sodium hypochlorite (chlorination) will be used to disinfect the effluent by destroying bacteria and viruses and sodium thiosulfate (de-chlorination) reduces chlorine concentration to a specified level before final discharge. Soda ash (sodium bicarbonate) will be used for pH control. Alum and polymer will be used to precipitate and settle phosphorus and suspended solids in the alum clarifier; polymer will also be used to aid flocculation. The solids will be shipped offsite to a permitted sanitary treatment facility.

Effluents from water and waste water treatment systems discharged to the Chesapeake Bay will meet chemical and water quality limits established in the National Pollutant Discharge Elimination System (NPDES) permit for CCNPP Unit 3.

### 2.3.3 Cooling Systems

CCNPP Unit 3 cooling system design, operational modes, and component design parameters are determined from the U.S. EPR design documents, site characteristics, and engineering evaluations. The plant cooling systems and the anticipated cooling system operational modes are described in Section 2.3.3.1. Design data and performance characteristics for the cooling system components are presented in Section 2.3.3.2. These characteristics and parameters are used to assess and evaluate the impacts on the environment. Environmental impacts occur at the intake and discharge structures and the cooling towers. There are two cooling systems that have intakes and cooling towers. These systems are the CWS and the ESWS. Figure 2.3-2 is a general flow diagram of the cooling water systems for CCNPP Unit 3.

#### 2.3.3.1 Circulating Water Supply System/Auxiliary Cooling Water Systems

The U.S. EPR uses a single mechanical draft cooling tower for heat dissipation with a plume abatement system that will eliminate the water vapor plume commonly associated with large wet cooling towers. CCNPP Units 1 and 2 use a once-through cooling system. Under the restrictions imposed pursuant to §316 of the Federal Clean Water Act, closed-cycle cooling is the only practical alternative for Unit 3 that would meet both the §316(b) intake requirements at new facilities, as well as the §316(a) thermal requirements at this multi-facility site.

The CWS at CCNPP Unit 3 dissipates up to 1.108 x $10^{10}$ BTU/hr (2.792 x $10^{9}$ Kcal/hr) of waste heat rejected from the main condenser and the Closed Cooling Water System (CLCWS) during normal


© 2007 UniStar Nuclear Development, LLC. All rights reserved.
COPYRIGHT PROTECTED

CCNPP Unit 3 operation at full load. The exhausted steam from the low pressure steam turbine is directed to a surface condenser (i.e., main condenser), where the heat of vaporization is rejected to a loop of CWS cooling water. The CWS has nominal flow rate of 777,560 gpm (2,943,385 lpm).

Evaporation in the cooling tower increases the level of solids in the circulating water. To control solids, a portion of the recirculated water must be removed or blown down and replaced with clean water. In addition to the blowdown and evaporative losses, a small percentage of water in the form of droplets (drift) is also lost from the cooling tower. Peak anticipated evaporative losses are approximately 20,200 gpm (76,465 lpm). Maximum blowdown is approximately 20,201 gpm (76,469 lpm). Maximum drift losses are expected to be less than 4 gpm (15 lpm). Makeup water from the Chesapeake Bay is required to replace the maximum 40,440 gpm (153,082 lpm) losses from evaporation, blowdown and drift.

Makeup water for the CWS will be taken from the Chesapeake Bay by pumps at a maximum rate of approximately 43,480 gpm (164,590 lpm). This is based on maintaining the CWS and supplying the Desalination Plant with 3,040 gpm (11,508 lpm). The pumps will be installed in a new intake structure located next to the south end of the existing CCNPP Units 1 and 2 intake structure. The makeup water is pumped through a common header directly to the cooling tower basin. Blowdown from the cooling tower discharges to a common retention basin to provide time for settling of suspended solids and to permit further chemical treatment of the wastewater, if required, prior to discharge to the Chesapeake Bay.

The CWS water is treated as required to minimize fouling, inhibit scaling on the heat exchange surfaces, control growth of bacteria, particularly Legionella bacteria, and inhibit corrosion of piping materials. See Table 6.4-2 for expected chemical treatments.

#### 2.3.3.2 Essential Service Water System/Ultimate Heat Sink

The U.S. EPR design has a safety-related ESWS to provide cooling water to the CCWS heat exchangers located in the Safeguards Building and to the cooling jackets of the emergency diesel generators located in the Emergency Power Generating Buildings. The ESWS is used for normal operations, refueling, shutdown/cooldown, anticipated operational events, design basis accidents and severe accidents. The ESWS is a closed-loop system with four safety-related trains and one non-safety-related dedicated (severe accident) train to dissipate design heat loads. The non-safety-related train is associated with one safety-related train.

Safety-related, two-cell mechanical draft cooling towers with water storage basins comprise the UHS that functions to dissipate heat rejected from the ESWS. The two cells of the ESWS cooling tower share a single basin. The ESWS cooling tower basins are sized to provide sufficient water to permit the ESWS to perform its safety-related heat removal function for up to 72 hours post-accident under worst anticipated environmental conditions without replenishment. After 72 hours have elapsed post-accident, if required, the safety-related UHS makeup pumps may be operated to provide brackish water from the Chesapeake Bay to the ESWS cooling tower basins to maintain water inventory for the 30 day post-accident period as stipulated in NRC Regulatory Guide 1.27.

Each of the four ESWS cooling towers has a dedicated CCWS heat exchanger to maintain separation of the safety-related trains. Each ESWS safety-related train uses dedicated mechanical draft cooling towers to dissipate heat during normal conditions, shutdown/cooldown, or design basis accident conditions. The non-safety-related train uses its associated safety-related train ESWS cooling tower to dissipate heat under severe accident conditions.


© 2007 UniStar Nuclear Development, LLC. All rights reserved.
COPYRIGHT PROTECTED

Heated ESWS water returns through piping to the spray distribution header of each UHS cooling tower. Water exits the spray distribution header through spray nozzles and falls through the tower fill. Two fans provide upward air flow to remove latent and sensible heat from the water droplets as they fall through the tower fill. The heated air exits the tower and mixes with ambient air, completing the heat rejection process. The cooled water is collected in the tower basin for return to the pump suction for recirculation through the system. Each ESWS cooling tower has a dedicated ESWS pump with an additional pump to supply the severe accident train. Table 2.3-2 provides nominal flow rates and heat loads in different operating modes for the ESWS.

**Table 2.3-2 Minimum and Nominal Essential Service Water System Flows and Heat Loads at Different Operation Modes per Train**

| | Minimum Flow[a] (gpm / lpm) | Nominal Flow[a] (gpm / lpm) | Heat Transferred (BTU/hr / Kcal/hr) | Anticipated Number of Trains Operating |
|---|---|---|---|---|
| Normal Operation (Full Load) | 17,340 / 65,639 | 19,075 / 72,206 | 165 E+06 / 416 E+05 | 2 |
| Cooldown | 17,340 / 65,639 | 19,075 / 72,206 | 182 E+06 / 459 E+05 | 4 |
| Design Basis Accident | 17,340 / 65,639 | 19,075 / 72,206 | 313 E+06 / 789 E+05 | 2 |
| Severe Accident | 2,420 / 9,160 | 2,665 / 10,088 | 55 E+06 / 139 E+05 | 1 |

The water loss from the UHS is expected to be 1,882 gpm (7,124 lpm) based on 940 gpm (3,558 lpm) from evaporation, 940 gpm (3,558 lpm) from blowdown, and drift loss of 2 gpm (8 lpm) during normal conditions based on two trains operating. The water loss under shutdown/cooldown conditions will be approximately 3,764 gpm (14,248 lpm) based on 1,880 gpm (7,117 lpm) from evaporation, 1,880 gpm (7,117 lpm) from blowdown, and drift loss of 4 gpm (15 lpm) with all four ESWS cooling towers in operation. The blowdown from the four ESWS cooling towers will flow by gravity to the common retention basin.

The Desalination Plant produces a maximum flow of approximately 3,040 gpm (11,508 lpm) of raw water (based on 40% recovery). Makeup water to the ESWS is normally supplied from the plant raw water system. Under post-accident conditions lasting longer than 72 hours, the makeup water will be supplied from the safety-related UHS makeup water system. The safety-related UHS makeup pumps are housed in a safety-related intake structure near the CWS intake structure.

The ESWS makeup water under DBA conditions will be provided at a maximum flow rate of approximately 942 gpm (3,566 lpm) to accommodate the maximum evaporation rate (approximately 940 gpm (3,558 lpm)) and drift loss (approximately 2 gpm (7.5 lpm) for the unit) with no anticipated blowdown for two ESWS cooling towers. Maximum ESWS blowdown and makeup rates are based on maintaining two cycles of concentration and evaporation at 82°F wet-bulb and 20% relative humidity.

[a] Based on a mass flow rate (lpm/hr) converted to gpm using water properties at 14.7 Psia (101.4 kPa) and 60ºF (15.56 ºC)


© 2007 UniStar Nuclear Development, LLC. All rights reserved.
COPYRIGHT PROTECTED

The ESWS water is treated as required to minimize fouling, inhibit scaling on heat exchange surfaces, control growth of bacteria (particularly Legionella bacteria), and inhibit the corrosion of piping materials. Pumps, valves and other system component materials will be designed for use in either a fresh or brackish water application.

### 2.3.4 Radioactive Waste Systems

The generation of power within the reactor results in the presence of radioactive materials in various forms and quantities within the reactor core, reactor coolant system, and associated systems and components. The vast majority of the radioactivity produced (fission products) is completely contained within the clad fuel rods and is therefore not available for release to fluid systems or to the environment. However, if imperfections in the cladding are present, a small fraction of these fission products escapes from the affected fuel rods to the reactor coolant. The other main source of radioactivity to the reactor coolant is the corrosion of primary system surfaces and activation of the corrosion products within the reactor core.

Fission and activated corrosion product radionuclides within the reactor coolant system can be the source of radioactivity to associated systems and components. This radioactivity appears in letdown and leakage from these systems and components that, in turn, can be the source of radioactivity in liquid and gaseous discharges from the plant site and in solid waste materials generated within the plant. Radioactive effluents are collected, processed, monitored and directed for either reuse or release to the environment by the radioactive waste treatment systems. Solid radioactive wastes are collected and packaged for temporary storage, shipment and offsite disposal.

The radioactive waste treatment systems include the following:

- The Liquid Waste Storage System and the Liquid Waste Processing System (1) receive radioactive liquid wastes collected from the various systems and buildings in which they were generated, and (2) process those liquid wastes in a manner that reduces the activity present in the aggregate liquid wastes such that discharges to the environment can be controlled.

- The Gaseous Waste Processing System handles fission product and radiolytic decomposition gases released from reactor coolant within the various process systems. Radioactive gases or airborne particulates released to the ambient atmosphere in one of the buildings due to system leakage from the process system piping is managed by the combined operation of the Containment Ventilation System, Safeguards Building Controlled Area Ventilation System, Fuel Building Ventilation System, Nuclear Auxiliary Building Ventilation System, and Sampling Activity Monitoring Systems.

- The Solid Waste Management System serves to collect, treat and store the solid radioactive wastes produced throughout the plant. There are several types of wet solid waste produced in the plant. These include spent resins, filter and centrifuge sludges, sludge from the storage tank bottoms, and evaporator concentrates. There are also dry wastes such as paper, cloth, wood, plastic, rubber, glass and metal components that are contaminated. The solid waste system consists of three parts: the radioactive concentrates processing system; the solid waste processing system; and the solid waste storage system.

The design and operational objectives of the CCNPP Unit 3 radioactive waste treatment systems are to maintain, during normal operation, the radioactivity content of liquid and gaseous effluents from the site


© 2007 UniStar Nuclear Development, LLC. All rights reserved.
COPYRIGHT PROTECTED

such that the dose guidelines expressed in Appendix I to 10 CFR Part 50 (10 CFR 50.34a), 40 CFR 190, and 10 CFR 20.1301(d) are met. The radioactive waste treatment systems are designed to keep doses to the public as low as reasonably achievable (ALARA). The dose to the public from radwaste systems during plant operation will meet the dose limits for individual members of the public as specified in 10 CFR 20.1301.

### 2.3.5 Non-Radioactive Waste Systems

This section provides a description of non-radioactive waste systems for CCNPP Unit 3. The non-radioactive waste streams include: (1) effluents containing chemicals or biocides; (2) sanitary system effluents; and (3) other effluents. Information regarding the amount and quantities of non-radioactive wastes that will be generated are discussed in detail in Section 5.0 (wastes generated during plant construction) and Section 6.0 (wastes generated from normal plant operations).

#### 2.3.5.1 Waste Systems for Effluents Containing Chemicals or Biocides

Chemicals are typically used to control water quality, scale, corrosion and biological fouling. Sources of non-radioactive effluents include plant blowdown, sanitary wastes, floor and equipment drains, and storm water runoff.

The treatment of non-radioactive effluents will be performed by the Circulating Water Treatment System, the Essential Service Water Treatment System, the Liquid Waste Processing System and the Waste Water Treatment Plant. Table 6.4-2 lists the various chemicals processed through these systems. Chemical concentrations within effluent streams from the plant will be controlled through engineering and operational/administrative controls in order to meet NPDES requirements at the time of construction and operation.

Naturally occurring substances (e.g., marine growth) will not be changed in form or concentration by plant operations. Those naturally occurring substances that are not sloughed off will be removed to a landfill.

#### 2.3.5.2 Sanitary System

Sanitary waste systems installed during pre-construction and construction activities will likely include portable toilets supplied and serviced by a licensed sanitary waste treatment contractor. Based on an anticipated construction work force of 1,000 people in the first year of construction activities and 4,000 people in the second through fifth years of construction activities, the quantity of sanitary waste expected to be generated is 6,500 gpd (24,605 lpd) for the first year, and 19,500 gpd (73,816 lpd) for years 2 through 5. Sanitary waste will be removed offsite during pre-construction and construction activities and will not add to the existing onsite discharge effluents.

During the operations phase for CCNPP Unit 3, a Waste Water Treatment Plant will collect sanitary wastes. It will be designed for domestic waste only and exclude industrial materials, such as chemical laboratory wastes, and will be sized to accommodate the needs of personnel associated with the unit. The CCNPP Unit 3 Waste Water Treatment Plant System will be monitored and controlled by trained operators. It will be dedicated to CCNPP Unit 3 and will not process waste from CCNPP Units 1 and 2.

The CCNPP Unit 3 Waste Water Treatment Plant is expected to treat sanitary waste in the same manner as other Waste Water Treatment Plants in Maryland and to meet similar limitations. Therefore, effluent characteristics for the CCNPP Unit 3 Waste Water Treatment Plant are expected to be similar to those for


© 2007 UniStar Nuclear Development, LLC. All rights reserved.
COPYRIGHT PROTECTED

the CCNPP Units 1 and 2 Waste Water Treatment Plant. In addition, similar to the CCNPP Units 1 and 2 Waste Water Treatment Plant, the CCNPP Unit 3 Waste Water Treatment Plant discharge will be processed along with other waste streams.

CCNPP Unit 3 sanitary waste handling will be contracted to a State of Maryland-licensed Waste Treatment Plant Operator. The Radiation Protection and Chemistry Manager will have oversight of this contractor to ensure that required effluent parameters are met. The waste sludge will be removed by the contractor and transported to a waste processing plant. Sludge will be checked for radiological contaminants prior to release. If any plant-related radionuclides are identified, the sludge will be disposed of as low level radioactive waste.

Effluent discharges are regulated under the provisions of the Federal Water Pollution Control Act, and the conditions of discharge will be specified in the National Pollutant Discharge Elimination System (NPDES) permit. It is expected that effluent limits for the CCNPP Unit 3 sanitary system will be similar to those already in effect for the CCNPP Units 1 and 2 sanitary system.

#### 2.3.5.3 Other Waste Treatment Systems

This section describes the following waste handling systems not addressed in the previous sections:

- non-radioactive gaseous wastes,
- liquid wastes,
- hazardous wastes,
- mixed wastes, and
- solid effluents.

**Handling of Gaseous Emissions**

Non-radioactive gaseous emissions result from testing and operating the diesel generators and from their related fuel storage tanks. All air emissions will comply with federal, state, and local emissions standards and requirements.

CCNPP Unit 3 will have six standby diesel generators, four Emergency Diesel Generators (EDGs), and two Station Blackout (SBO) diesel generators. These units will burn diesel fuel that is trucked on site and stored in tanks for subsequent use. It is estimated that each EDG will be tested approximately 4 hours every month, plus an additional 24 to 48 hours once every 2 years. It is estimated that each SBO diesel generator will be tested approximately 4 hours every quarter, plus an additional 12 hours every year for maintenance activities. The SBO diesels will also be tested for an extended period of about 12 hours every 18 months.

The products of diesel fuel combustion exhausted from the EDGs represent emissions to the atmosphere. The exhaust stream emitted from the EDGs contains various pollutants. These emissions commonly include particulates, sulfur oxides, carbon monoxide, hydrocarbons and nitrogen oxides. The pollutants and quantities emitted and their resulting impact are discussed in subsequent sections of this Technical Report. Diesel generator emissions will be released from an exhaust stack located on top of each diesel generator building at an elevation of 78 ft (23.8 m). Diesel generator exhaust will meet U.S. EPA Tier 4 requirements when CCNPP Unit 3 is operational.


© 2007 UniStar Nuclear Development, LLC. All rights reserved.
COPYRIGHT PROTECTED

**Handling of Liquid Effluents**

Chesapeake Bay water will serve as the source of cooling water for the CWS. Fresh water for CCNPP Unit 3 will be supplied by a Desalination Plant that utilizes a seawater reverse osmosis (SWRO) process. The Desalination Plant will receive seawater from Chesapeake Bay and will be designed to provide a desalinized water output of 1.75 million (1.75E+06) gpd (6.62E+06 lpd). The Desalination Plant will provide water for the ESWS, the Demineralized Water Distribution System, the Potable and Sanitary Water Distribution System and the Fire Protection System as described earlier.

The SWRO reject stream is brine with a salt concentration of approximately 2 to 1 above normal Chesapeake Bay water levels. The brine is classified as Industrial Waste by the U.S. EPA The SWRO effluent (discharge) is directed into the CCNPP Unit 3 CWS blowdown.

The CWS takes Chesapeake Bay water into a closed cooling system, which utilizes a cooling tower to cool the water after it has cooled the plant's turbine discharge condensate. A portion of the CWS water is constantly returned as blowdown to the Chesapeake Bay via a discharge pipe. Accordingly, mixing the discharge of the Desalination Plant with the CWS blowdown will result in a slight dilution of the CWS desalination discharge. As such, the environmental impact of the Desalination Plant discharge will be enveloped by that of the CWS discharge. During plant shutdown, desalination plant discharge will be diluted to avoid excess salt concentration discharged to the Chesapeake Bay.

Non-radioactive liquid effluents that could potentially drain to the Chesapeake Bay are limited under the NPDES permit. There are three anticipated outfalls for release of non-radioactive liquid effluents from CCNPP Unit 3: (1) one for plant effluents (e.g., effluent from sewage treatment, the Desalination Plant, cooling tower blowdown, etc.) via the offshore, submerged diffuser; (2) one for stormwater via various surface outlets throughout the CCNPP Unit 3 site area; and (3) one for intake screen backwash. These outfalls will be controlled under the CCNPP Unit 3 NPDES permit.

Other non-radioactive liquid waste effluents generated in the controlled area (i.e., Steam Generator Blowdown Demineralizing System) are managed and processed by the Liquid Waste Storage System and the Liquid Waste Processing System. Non-radioactive liquid waste first collects in a tank where it is pre-treated chemically or biologically. Chemical pre-treatment gives the waste an optimum pH value; biological pre-treatment allows organics to be consumed. If deemed clean, it can be routed directly to one of the monitoring tanks; otherwise, once pre-treated, the wastes are forwarded to the Liquid Waste Processing System for treatment. Treatment may consist of evaporation, centrifugation, demineralization/filtration, chemical precipitation (in connection with centrifugation), or organic decomposition (in connection with centrifugation). After the wastewater has been treated, it is received in one of two monitoring tanks, which also receive treated liquid radwaste. Wastewater is then sampled and analyzed, and if within the limits for discharge, it can be released. This treatment of non-radioactive liquid waste effluents is similar to the treatment employed for CCNPP Units 1 and 2.

**Handling of Hazardous Wastes**

Hazardous wastes are materials with properties that make them dangerous or potentially harmful to human health or the environment, or that exhibit at least one of the following characteristics: ignitability, corrosivity, reactivity or toxicity. Federal Resource Conservation and Recovery Act regulations govern the generation, treatment, storage and disposal of hazardous wastes. Hazardous waste is defined as any solid, liquid or gaseous waste that is not mixed waste, is listed as hazardous by any federal or state regulatory agency, or meets the criteria of Subpart D of 40 CFR 261 or COMAR 26.13.02.


© 2007 UniStar Nuclear Development, LLC. All rights reserved.
COPYRIGHT PROTECTED

A Hazardous Waste Minimization Plan will be developed and maintained that documents the current and planned efforts to reduce the amount or toxicity of the hazardous waste to be generated at CCNPP Unit 3. Hazardous wastes will be collected and stored in a controlled access temporary storage area (TSA). A Hazardous Material and Oil Spill Response guideline will be maintained that defines HAZMAT team positions and duties. Procedures will be put in place to minimize the impact of any hazardous waste spills in the unlikely event of occurrence. Containers of known hazardous waste received at a TSA will be transported offsite within 90 days of the container's accumulation date according to the applicable section/unit procedures. The Radiation Protection and Chemistry Manager will manage hazardous wastes using plant procedures to be developed in the future, but that will comply with all applicable federal, state, and local regulations.

**Handling of Mixed Waste**

Mixed waste includes hazardous waste that is intermixed with low-level radioactive material, special nuclear material, or by-product material. Federal regulations governing generation, management, handling, storage, treatment, disposal, and protection requirements associated with these wastes are contained in 10 CFR (NRC regulations) and 40 CFR (Environmental Protection Agency regulations). Mixed waste is generated during routine maintenance activities, refueling outages, radiation and health protection activities, and radiochemical laboratory practices. The quantity of mixed waste generated at CCNPP Unit 3 is expected to be small, as it is at other nuclear power plants.

The management of mixed waste for CCNPP Unit 3 will comply with the requirements of U.S. EPA's Mixed Waste Enforcement Policy and the Memorandum of Understanding with the State of Maryland until an approved, U.S. EPA permitted disposal facility becomes available. CCNPP Units 1 and 2 currently ship some mixed waste offsite to permitted facilities. This occurs infrequently and is dependent on the wastes actually generated. It is expected that CCNPP Unit 3 will also infrequently ship some mixed waste to permitted facilities.

Mixed wastes stored in a TSA will be inventoried and a list will be maintained according to CCNPP Unit 3 procedures, and periodic inspections of mixed waste will be conducted according to these same procedures.

**Handling of Solid Waste**

Operation of an industrial waste facility for private use at the CCNPP site does not require a permit but must comply with the regulations imposed by the State of Maryland for construction, installation and operation of solid waste facilities. Acceptable wastes for a landfill containing land clearing debris include earthen material such as clays, sands, gravels and silts; topsoil; tree stumps; root mats; brush and limbs; logs; vegetation; and rock.

Other waste materials such as office paper and aluminum cans will be recycled locally. Putrescible wastes will be disposed in a permitted offsite disposal facility.

The types of solid waste that are expected to be generated by CCNPP Unit 3 include hazardous waste; mixed waste; and cooling water intake debris, trash, and solid waste.

Based on the operating experience at CCNPP Units 1 and 2, it is expected that CCNPP Unit 3 will recycle, recover, or send offsite for disposal virtually all solid waste. In summary:


© 2007 UniStar Nuclear Development, LLC. All rights reserved.
COPYRIGHT PROTECTED

- Non-radioactive solid wastes (e.g., office wastes, recyclables) are collected temporarily on the CCNPP site and disposed of at offsite, licensed disposal and recycling facilities.

- Debris (e.g., vegetation) collected on trash racks and screens at the water intake structure are disposed as solid waste.

Scrap metal, used oil, antifreeze (ethylene or propylene glycol), and universal waste will be collected and stored temporarily on the CCNPP site and recycled or recovered at an offsite permitted recycling or recovery facility, as appropriate. Used oil and antifreeze are not controlled hazardous substances in Maryland unless they have been combined or mixed with characteristic or listed hazardous wastes. Typically, used oil and antifreeze are recycled. If they are not, they will be disposed of as solid waste in accordance with the applicable regulations.

### 2.3.6 Radioactive Waste

#### 2.3.6.1 Radioactive Materials Transportation Systems

Unirradiated fuel will be shipped to CCNPP Unit 3 by truck. The procedures will be similar to those established for CCNPP Units 1 and 2.

The U.S. Department of Energy (DOE) is responsible for irradiated fuel shipments from CCNPP Unit 3 to a permitted repository. The DOE will make the decision regarding the mode of transport. It is anticipated that irradiated fuel will be shipped by truck, rail, or barge. Radioactive waste from CCNPP Unit 3 will be shipped by truck or rail.

CCNPP Unit 3 will operate in accordance with carrier procedures and policies that comply with the requirements of 10 CFR 51.52(a)(4), 10 CFR 71, 49 CFR 173, and 49 CFR 178.

#### 2.3.6.2 Temporary Storage and Disposal of Radioactive Waste

The temporary storage and disposal of high level nuclear waste, including spent fuel, is subject to the exclusive regulatory jurisdiction of the DOE. For informational purposes only, "Temporary Storage/Disposition and Impact of Spent Fuel and Low-Level Radioactive Waste," is attached hereto as Appendix D.

## 2.4 DETAILED SCHEDULE FOR ENGINEERING, CONSTRUCTION AND OPERATION (COMAR 20.79.03.01.D)

The schedule for engineering, construction, and operation was previously discussed in Section 1.4

## 2.5 SITE SELECTION

The placement of the proposed CCNPP Unit 3 was designed to minimize environmental impacts, while maintaining the integrity of the existing CCNPP campus.

A site layout study was conducted to select an appropriate location on the CCNPP campus for Unit 3. A copy of the site layout study is provided in Appendix A. Three sites were considered for the expansion project located north, south, and west of the existing CCNPP Units 1 and 2. The site selection criteria used to evaluate the three potential sites included: environmental impacts; security; land use and zoning; feasibility of construction; switchyard and transmission lines; impact to existing facilities, process studies,


© 2007 UniStar Nuclear Development, LLC. All rights reserved.
COPYRIGHT PROTECTED

and future construction of an additional nuclear power station. As part of the environmental impact study, aesthetics, wetlands, threatened and endangered species, environmentally sensitive habitats, sound, air, and areas of archaeological significance were evaluated. Based on the aforementioned criteria, it was determined that the south parcel would be the most ecologically sound location for the construction of CCNPP Unit 3. Placement of CCNPP Unit 3 2,500 ft away from and further inland than Units 1 and 2 allows for minimal impacts to the existing infrastructure of the CCNPP campus.

### 2.5.1 Further Justification for Site Selection of the South Parcel

The State of Maryland wetlands regulatory program requires an applicant to avoid adversely impacting wetlands by all practicable means, and then to mitigate the effects that are determined to be unavoidable (COMAR 26.23.04.02). The federal wetlands program requires an applicant to consider all practicable alternatives to a project or project component, and then to mitigate the unavoidable effects (40 C.F.R. § 230.10). The Co-Applicants undertook an extensive site analysis (Appendix A) that considered many factors, including environmental impacts and nuclear regulatory requirements, prior to determining that CCNPP Unit 3 should be located on the South Parcel. Placement of Unit 3 at the north or west end of the CCNPP campus would have resulted in substantially more wetlands and habitat impacts. Thereafter, a specific site layout was developed that took into consideration the magnitude of the construction essential to build CCNPP Unit 3 and nuclear-specific construction requirements. After the layout was developed, the Co-Applicants undertook further analysis whose sole objective was to determine whether or not wetlands impacts could be further avoided by moving or reconfiguring certain components of the site layout. It was determined that the 14.3 acres (5.8 hectares) of permanent wetlands impacts within Wetland Assessment Areas I, II, IV, VI, VII, and IX are unavoidable and there are no practicable alternatives.

In general, the CCNPP Unit 3 construction facilities, including the batch plant, access road, parking, and laydown areas, have been designed to lessen the impact to the existing wetlands. The power block, switchyard, and cooling tower areas require large blocks of land where little design modification can be done to avoid wetlands. The power block will be physically located to lessen the impact to the critical areas. As a result, the location will minimize the impacts to the Johns Creek watershed. Relocating the power block and the switchyard further west of the currently designed location would cause a greater impact to this watershed.

### 2.5.2 Water Intake and Discharge Systems

A new water intake structure will be built near the intake structure for Units 1 and 2. The new intake structure will support both CWS and ESWS water needs and will be located between the existing CCNPP Units 1 and 2 intake curtain wall and screens.

A new discharge structure will be built to the north of the existing barge slip. This discharge facility will meet the Maryland water quality standards for discharge into the Chesapeake Bay. Discharge recirculation into the existing intake channel is not likely. By utilizing developed areas within the South Parcel, fewer environmental impacts are expected from construction activities.

#### 2.5.2.1 Intake System

The Chesapeake Bay intake system design would consist of the CCNPP Units 1 and 2 intake channel; the CCNPP Unit 3 non-safety-related CWS makeup water intake structure and associated equipment, including the non-safety-related CWS makeup pump; the safety-related UHS makeup water intake


© 2007 UniStar Nuclear Development, LLC. All rights reserved.
COPYRIGHT PROTECTED

structure and associated equipment, including the safety-related UHS makeup water pumps; and the makeup water chemical treatment system.

The intake channel will be an approximately 123 ft (37.5 m) long, 100 ft (30.4 m) wide conduit, with an earthen bottom at an elevation of - 20 ft, 6 in (- 6.2 m) below mean sea level (msl), and vertical sheet pile sides extending to an elevation of 10 ft (3.0 m) above msl. The location of the intake system is depicted in Figure 2.5-1. Figure 2.5-2 and Figure 2.5-3 provide detailed renderings of the intake structure and channel.

The CCNPP Unit 3 CWS makeup water intake structure will be an approximately 70 ft (21.3 m) long, 68 ft (20.7 m) wide concrete structure with individual pump bays. Three 50% capacity pumps will provide saltwater makeup to the CWS. The UHS makeup water intake structure will be an approximately 66 ft (20.1 m) long, 84 ft (25.6 m) wide concrete structure with individual pump bays. Four, 100% capacity, makeup pumps will be available to provide makeup water.

One makeup pump is located in each pump bay and one dedicated traveling band screen and trash rack is located in the CWS and UHS makeup intake structures. Debris collected by the trash racks and the traveling water screens will be collected in a debris basin for cleanout and disposal as solid waste.

Section 316(b) of the federal CWA requires the U.S. EPA to ensure that the location, design, construction, and capacity of CWIS reflect the best technology available (BTA) for minimizing adverse environmental impact. The objective of CWIS design is to meet entrainment and impingement mortality reduction goals established under Section 316(b) requirements. In addition to the impingement and entrainment losses associated with CWIS, there are the cumulative effects of multiple intakes and re-siting or modification of CWIS contributing to environmental impacts at the ecosystem level. These impacts include disturbances to threatened and endangered species, keystone species, the thermal stratification of water bodies, and the overall structure of the aquatic system food web.

The new intake channel will be located off the existing intake channel for CCNPP Units 1 and 2, perpendicular to the tidal flow of the Chesapeake Bay. This configuration minimizes the component of the tidal flow parallel to the channel flow and minimizes the potential for fish to enter the channel and intake structure. Flow velocities at the intake channel will depend on the Chesapeake Bay water level. Even at the minimum recorded Chesapeake Bay water level of - 4.0 ft (- 1.2 m) below mean sea level, the flow velocity along the new intake channel will be less than 0.5 fps (0.15 m/s), based on the maximum makeup demand of 43,480 gpm (164,590 lpm).

Based on preliminary cooling tower performance, it is expected that addition of the CCNPP Unit 3 using closed cycle cooling will increase fish and shellfish impingement and entrainment by less than 3.5% over the existing conditions at Units 1 and 2. CCNPP Unit 3 will utilize fish return systems similar to those currently employed at CCNPP Units 1 and 2 to minimize impingement mortality caused by the intake structure. It is anticipated that fewer fish and shellfish will be caught on the screens because CCNPP Unit 3 will require lower water flow velocity. Therefore, it is anticipated that CCNPP Unit 3 will have minimal impact on fish and shellfish impingement and entrainment.

CCNPP Unit 3 relies on makeup water from the Chesapeake Bay for safe shutdown and is designed for a minimum low water level of - 4.0 ft (- 1.2 m) below msl and can continue to operate at an extreme low water elevation of - 6.0 ft (- 1.8 m) below msl. The ESWS cooling towers will typically be supplied with fresh water makeup from storage tanks that are supplied from the desalination plant.


© 2007 UniStar Nuclear Development, LLC. All rights reserved.
COPYRIGHT PROTECTED

The CWS makeup water intake structure and the UHS makeup water intake structure flow velocities will be sufficiently low and there is potential for the intake channel to also act as a siltation basin. Although current and past operating experience at CCNPP Units 1 and 2 has not indicated that siltation will be a problem, dredging may be required to maintain the channel depth.

#### 2.5.2.2 Discharge System

The final plant discharge consists of cooling tower blowdown from both the CWS and ESWS cooling towers and site wastewater streams, including the domestic water treatment and circulation water treatment systems. Biocides or chemical additives approved by the U.S. EPA and the State of Maryland will be employed, and the constituent discharged to the environment will meet requirements established in the NPDES permit obtained for CCNPP Unit 3 prior to startup.

The NPDES permit is expected to specify threshold concentrations of "free available chlorine" (when chlorine is used) and "free available oxidants" (when bromine or a combination of bromine and chlorine is used) in cooling tower blowdown. The CCNPP Unit 3 NPDES permit will contain discharge limits for discharges from the cooling towers for two priority pollutants, chromium and zinc, which are widely used in the U.S. as corrosion inhibitors in cooling towers.

During operation, discharge flow to the Chesapeake Bay will be from the retention basin, which will collect site non-radioactive wastewater and tower blowdown. Discharge from the retention basin will be through a 30 in (76.2 cm) diameter discharge pipe. The pipe will branch into three nozzles before the discharge point. The normal discharge flow will be approximately 19,000 gpm (72,000 lpm) and the maximum discharge flow will be approximately 37,000 gpm (140,100 lpm).

The proposed discharge structure will be designed to meet applicable navigation and maintenance criteria and to provide an acceptable mixing zone for the thermal plume per Maryland regulations for thermal discharges. Figure 2.5-4 shows details of the discharge system. The proposed discharge point will be near the southwest bank of the Chesapeake Bay, approximately 1,200 ft (365.8 m) south of the intake structure for CCNPP Unit 3 and extending approximately 550 ft (167.6 m) into the Chesapeake Bay.

The preliminary centerline elevation of the discharge pipe will be 3 ft (0.9 m) above the bottom of the Chesapeake Bay. Riprap will be used as an erosion control measure at the discharge point.

#### 2.5.2.3 Water Supply (Makeup Water System)

CCNPP Unit 3 will require makeup water to the CWS and ESWS cooling towers in order to replace water inventory lost to evaporation, drift, and blowdown. During normal operations, fresh water makeup to the ESWS cooling towers will be provided either directly from the non-safety-related Desalination Plant or from storage tanks that are supplied from the Desalination Plant. Makeup water for the Desalination Plant will be extracted from the CWS cooling tower makeup line, which draws water from the Chesapeake Bay. Brackish water from the Chesapeake Bay will provide a backup source of makeup water to the ESWS when the fresh water supply is unavailable. Water from the Chesapeake Bay will be used as the raw water input for the Desalination Plant to preserve existing groundwater resources.

## 2.6 ECONOMIC IMPACT OF PROJECT ON STATE

Locating the proposed new nuclear facility at the existing CCNPP property will afford benefits to the state and local economy. The CCNPP owners will pay real and personal property taxes on the proposed new unit. Calvert County has agreed to provide a 50% credit against the property taxes during the first 15


© 2007 UniStar Nuclear Development, LLC. All rights reserved.
COPYRIGHT PROTECTED

years after the new unit is placed in service. At the conclusion of this period, the plant will pay the full amount of taxes imposed by the County, without abatement. The expected tax obligations of CCNPP Unit 3 are confidential, proprietary, and are being submitted to the PSC under seal.

Approximately 833 people are employed at CCNPP Units 1 and 2. It is anticipated that operation of Unit 3 would require a skilled workforce of 363 people. New jobs within approximately a 50-mi (80 km) radius of the plant would be created by the construction and operation of the new facility. Many of these jobs would be in the service sector and could be filled by local residents. It is anticipated that the new jobs would be maintained throughout the life of the plant.

Construction and operation of CCNPP Unit 3 would generate an economic multiplier effect in the area. The economic multiplier effect means that for every dollar spent an additional $0.69 of indirect economic revenue would be generated within the project area as compared to direct expenditures for goods, services, and labor. The increased spending by the direct and indirect labor force created as a result of the construction and operation of the new nuclear reactor unit would increase economic activity in the region, most noticeably in Calvert County.

## 2.7 IMPACT OF PROJECT ON STABILITY AND RELIABILITY OF ELECTRIC SYSTEM

The construction of a third nuclear-fueled generation unit at the CCNPP site will improve the current reliability situation by:

- Providing a significant new supply source near rapidly growing demand in the Baltimore-Washington corridor; and
- Adding generation capacity adjacent to existing transmission capability.

An interconnection feasibility study and an impact study were conducted for this project by PJM Interconnection, Inc. (PJM) in October 2006 found that this project, with the replacement of certain breakers and with certain operational limitations during extremely rare circumstances, could be added to the grid without producing any reliability problems. The addition of this baseload generation source nearby to load centers is expected to reduce the peak period congestion on transmission lines within the State of Maryland, as well as to free capacity on lines that are importing power from adjacent states.

## 2.8 LOCATION AND DESIGN FEATURES OF ELECTRIC SYSTEM UPGRADES

Because the CCNPP Unit 3 will be constructed adjacent to 500 kV transmission lines with adequate capacity to carry its output, along with that of CCNPP Units 1 and 2, there will not be the need to add any additional offsite transmission lines to support this project. The findings of the PJM feasibility and impact studies support this conclusion.

CCNPP Unit 3 will be connected to the grid through a new 500 kV, sixteen breaker, breaker and a half substation constructed at the CCNPP Unit 3 site. The existing 500 kV transmission lines (Calvert Cliffs to Waugh Chapel and Calvert Cliffs to Chalk Point) extending from the existing 500 kV substation for CCNPP Units 1 and 2 will be used for CCNPP Unit 3. Two new approximately one-mile long 500 kV transmission lines will be installed to connect the existing CCNPP Units 1 and 2 substation to the new CCNPP Unit 3 substation and to the grid. Additionally, two existing 500kV, 3,500 MVA circuits that are currently connected to the existing Units 1 and 2 substation will be disconnected from that substation and extended one mile (1.6 km) to the Unit 3 substation. The construction of this new substation and transmission reconfiguration is estimated to cost $59 million.


© 2007 UniStar Nuclear Development, LLC. All rights reserved.
COPYRIGHT PROTECTED

The feasibility study found that the addition of 1,640 MW of supply to the grid at this point has the potential to produce short circuit flows that can overstress the capacity of thirty-six 230 kV breakers within the PEPCO zone, four 230 kV breakers and five 500 kV breakers within the BGE zone and two 230 kV breakers within the Dominion zone. Estimated cost for replacement of these overdutied breakers is $71.7 million. These breaker replacements can be accommodated without the expansion of any existing substations.

945986.5


© 2007 UniStar Nuclear Development, LLC. All rights reserved.
COPYRIGHT PROTECTED

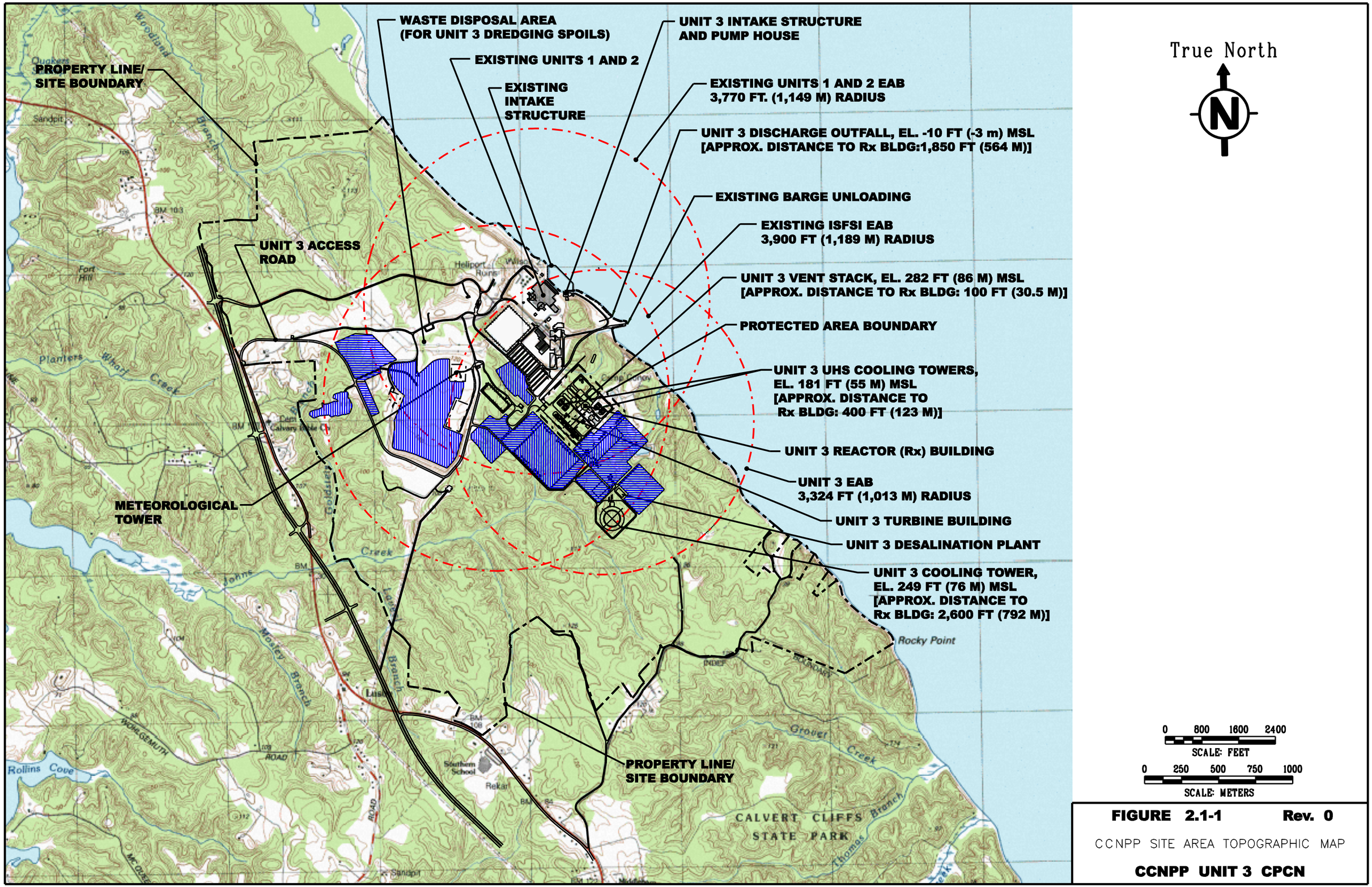


**FIGURE 2.1-1** **Rev. 0**

CCNPP SITE AREA TOPOGRAPHIC MAP

**CCNPP UNIT 3 CPCN**

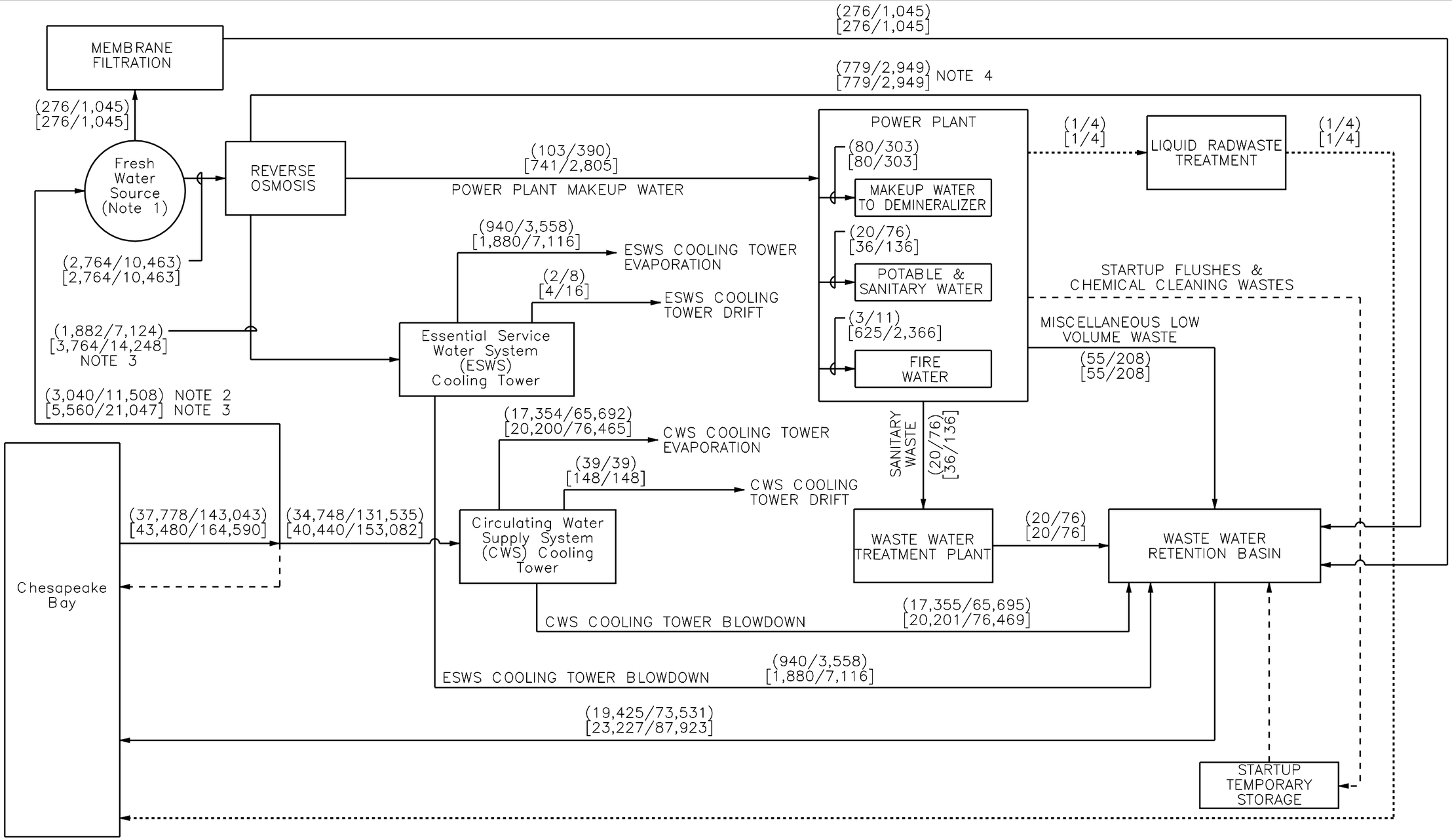


NOTES:

1. THE FRESH WATER SOURCE IS DESALINATED CHESAPEAKE BAY WATER.
2. MAKEUP WATER TO THE CWS CIRCULATING WATER SYSTEM WILL SUPPLY THE DESALINIZATION PLANT.
3. MAXIMUM FLOW WILL BE PROVIDED BY THE DESALINIZATION PLANT PLUS WATER STORED IN THE ESWS COOLING TOWER STORAGE BASINS.
4. SEE TABLE 2.3–1.

LEGEND:

- - - - - - STARTUP FLOWS

——— NORMAL FLOW

..... FLOW VARIES WITH OPERATING CONDITIONS

KEY:

(AVERAGE FLOWS: GALLONS PER MINUTE/LITERS PER MINUTE)
[MAXIMUM FLOWS: GALLONS PER MINUTE/LITERS PER MINUTE]

**FIGURE 2.3-1** **Rev. 0**

ANTICIPATED WATER USE DIAGRAM

**CCNPP UNIT 3 CPCN**

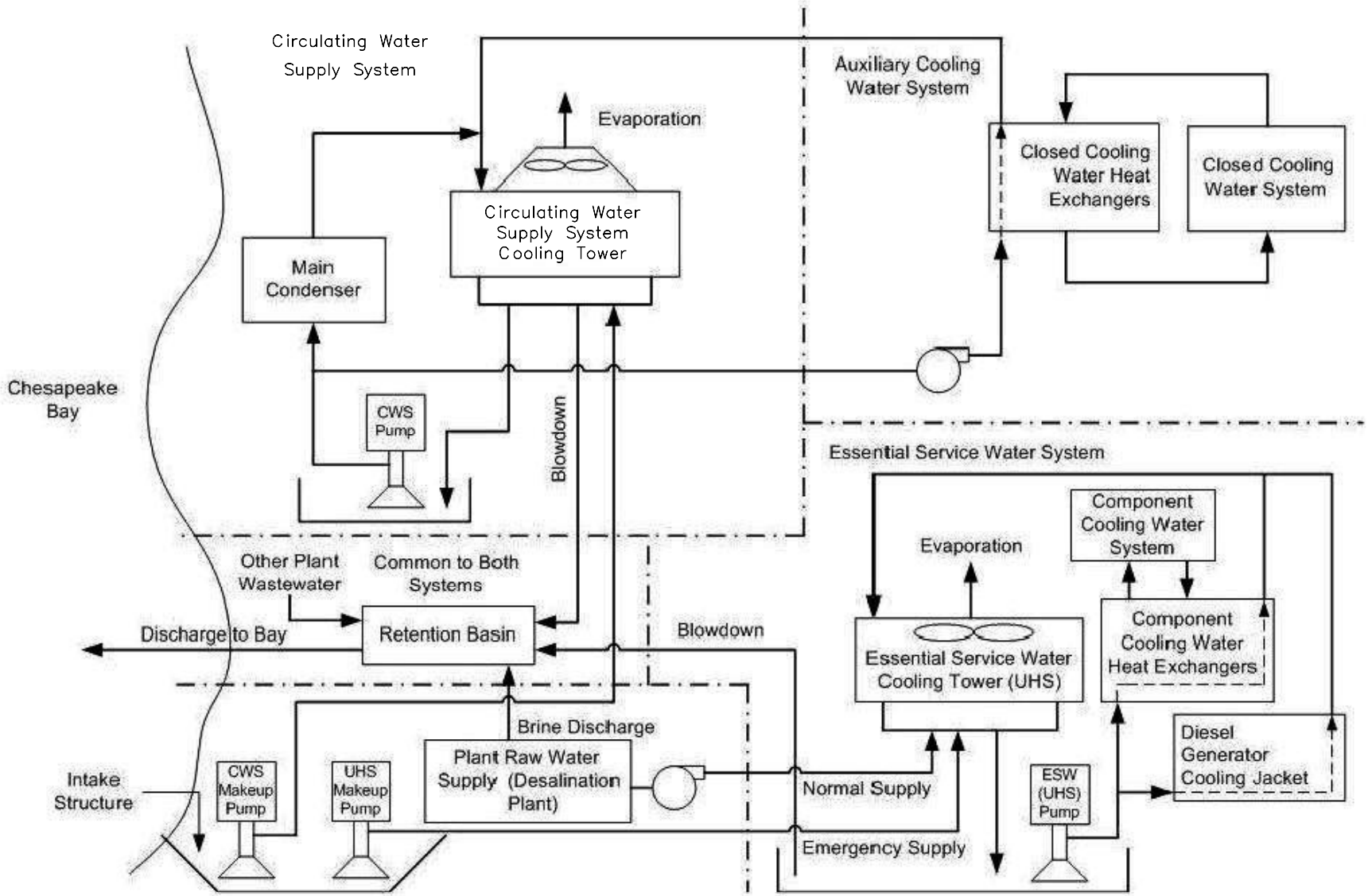


**FIGURE 2.3-2** **Rev. 0**

GENERAL COOLING SYSTEM
FLOW DIAGRAM FOR CCNPP UNIT 3

**CCNPP UNIT 3 CPCN**

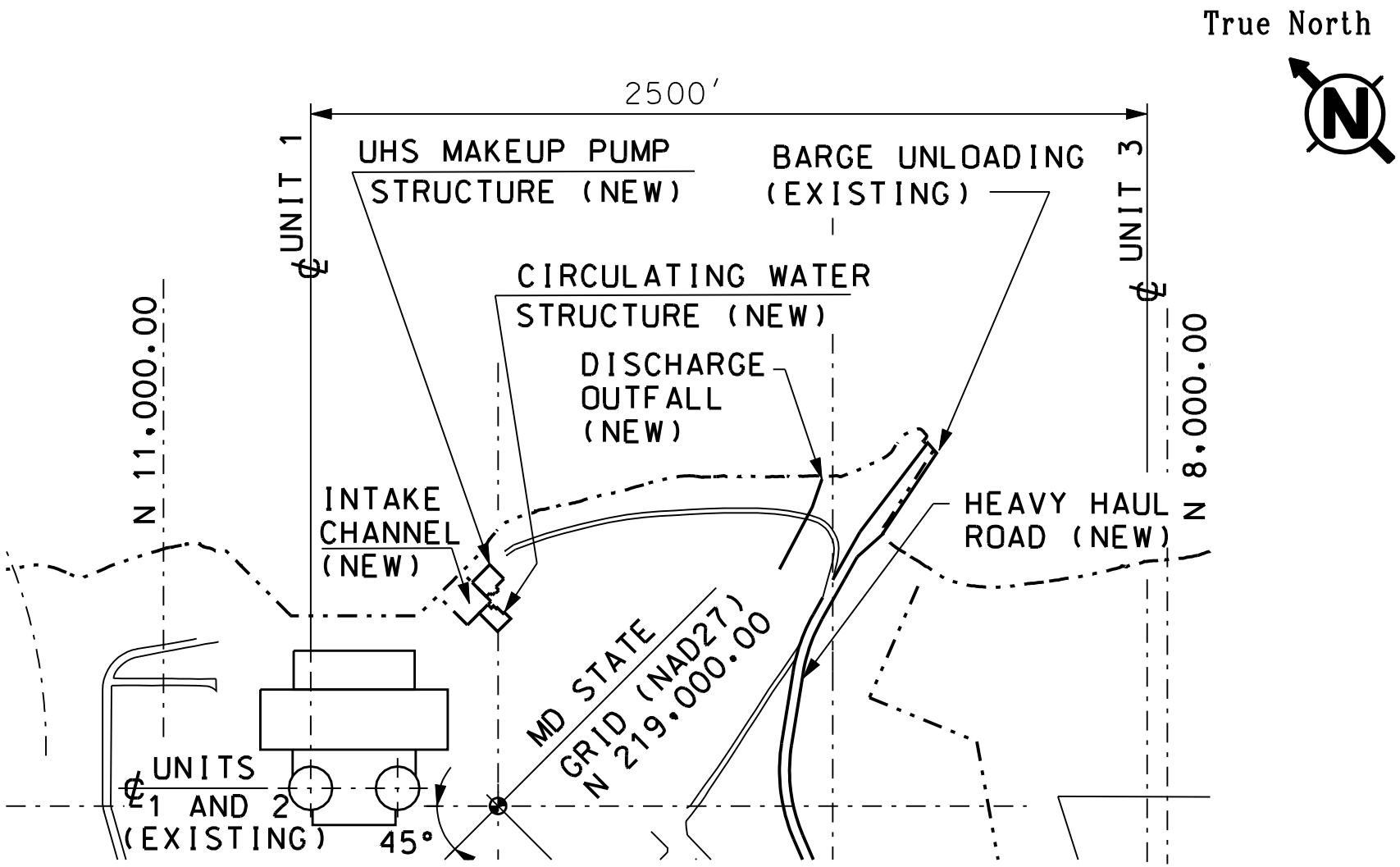


**FIGURE 2.5-1** **Rev. 0**

CIRCULATING WATER INTAKE/DISCHARGE
STRUCTURE LOCATION PLAN

**CCNPP UNIT 3 CPCN**

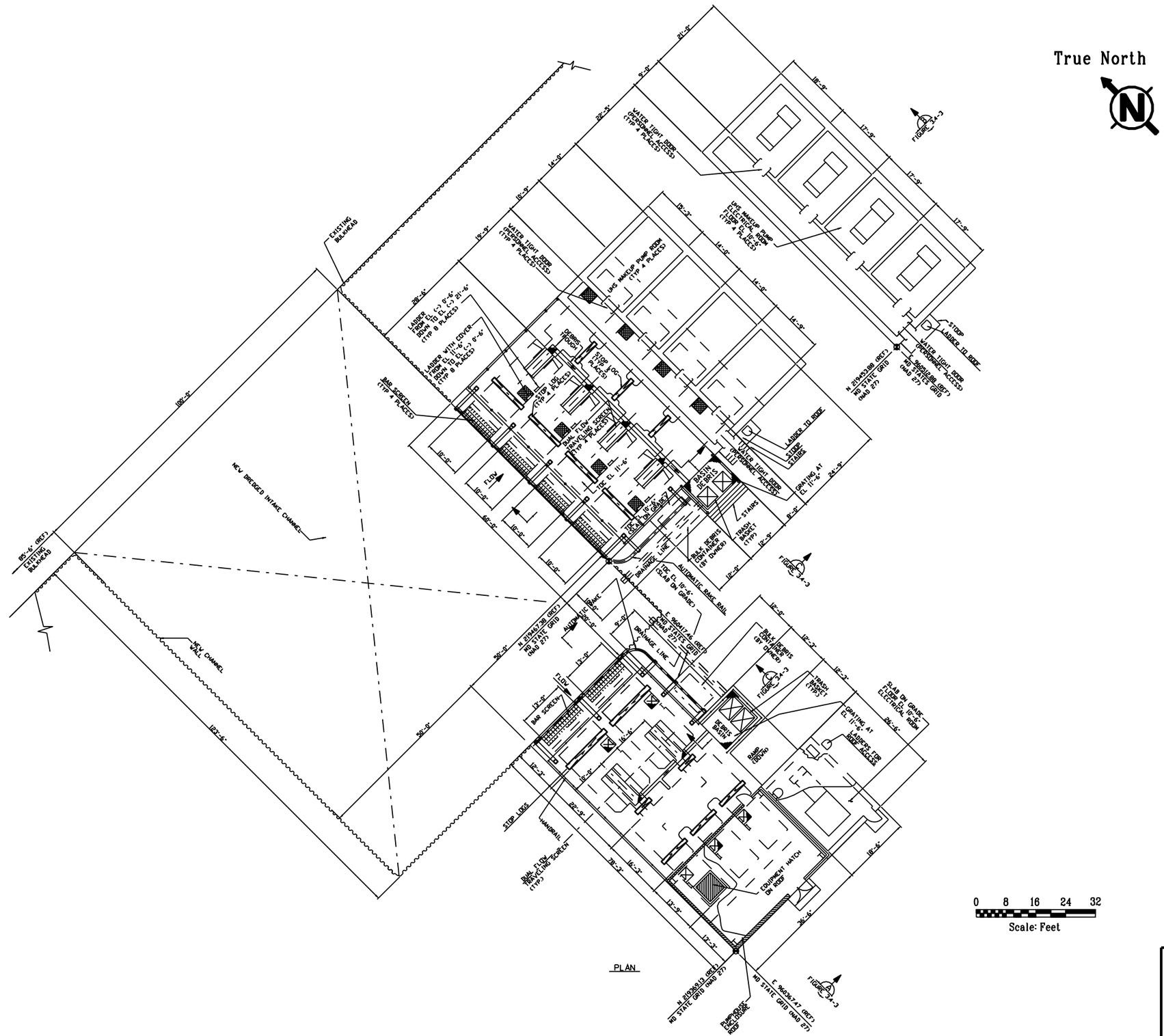


**FIGURE 2.5-2** **Rev. 0**

PLAN VIEW OF CHESAPEAKE BAY INTAKE SYSTEM FOR CCNPP UNIT 3

**CCNPP UNIT 3 CPCN**

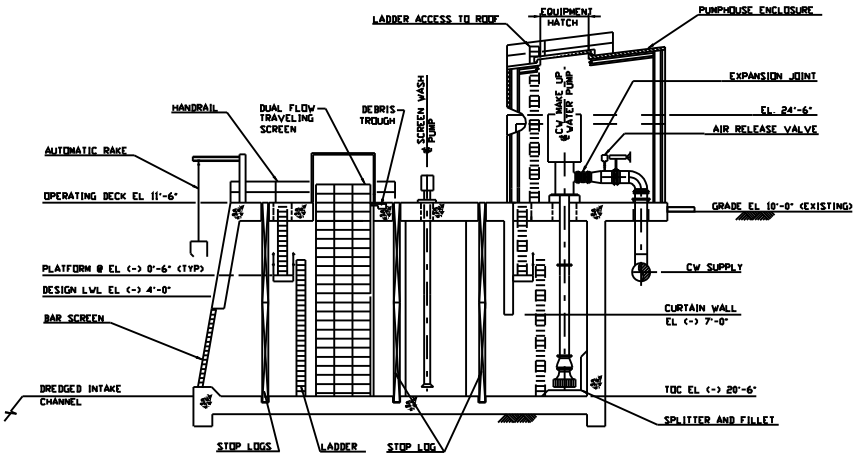


SECTION A
FIGURE 3.4-2

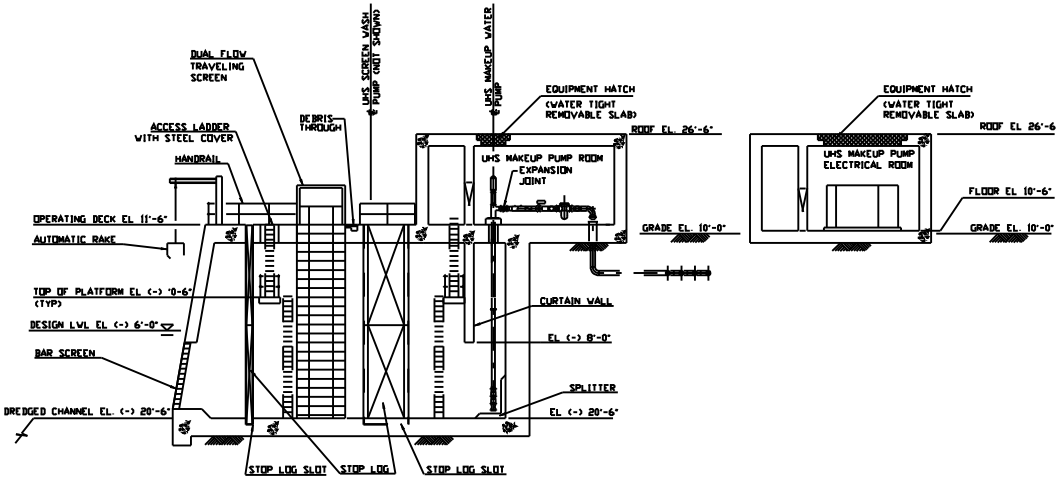


SECTION B
FIGURE 3.4-2

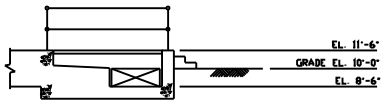


SECTION C
(NTS) FIGURE 3.4-2

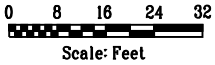


**FIGURE 2.5-3** **Rev. 0**

SECTION VIEW OF CHESAPEAKE BAY INTAKE SYSTEM FOR CCNPP UNIT 3

**CCNPP UNIT 3 CPCN**

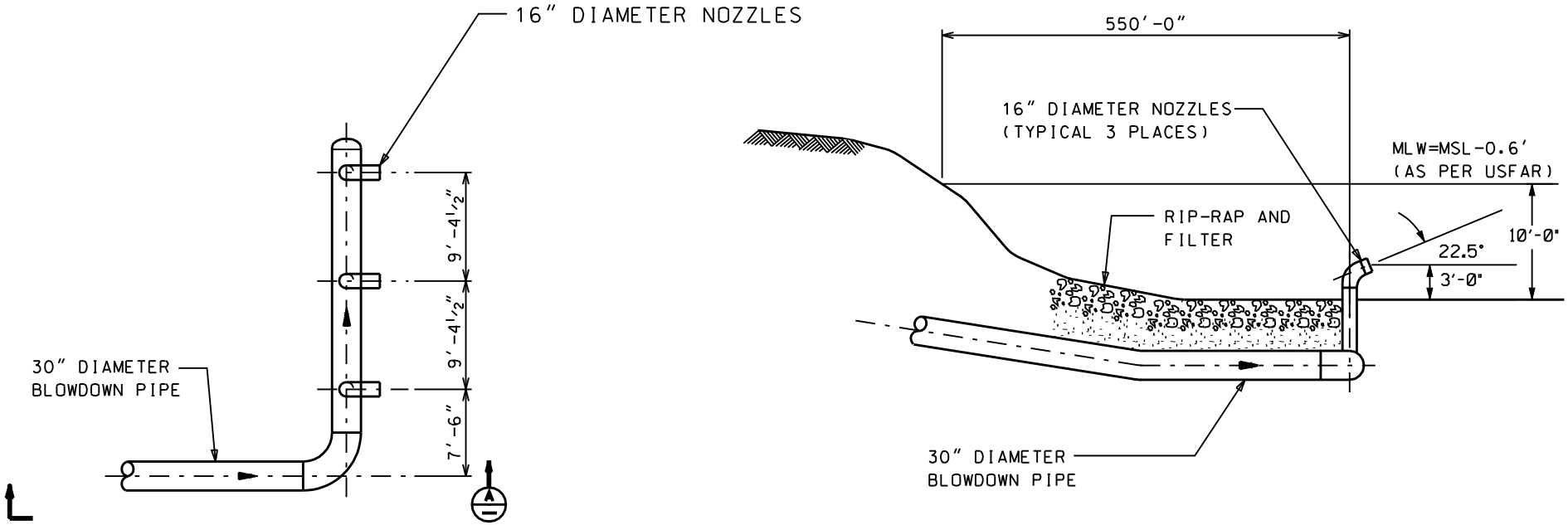


DIFFUSER PLAN VIEW

SECTION

**FIGURE 2.5-4** **Rev. 0**

VIEW OF NEW DISCHARGE OUTFALL FOR DISCHARGE SYSTEM FOR CCNPP UNIT 3

**CCNPP UNIT 3 CPCN**